UNITED STATES PATENT AND TRADEMARK OFFICE

BEFORE THE PATENT TRIAL AND APPEAL BOARD

AURIS HEALTH, INC.,
Petitioner,

v.

INTUITIVE SURGICAL OPERATIONS, INC.,
Patent Owner.

Case No. IPR2019-01533
U.S. Patent No. 8,142,447 B2

PETITIONER'S NOTICE OF APPEAL

Pursuant to 35 U.S.C. §§ 141, 142, and 319, and in accordance with 37 C.F.R. §§ 90.2-90.3, Petitioner appeals to the United States Court of Appeals for the Federal Circuit from the Final Written Decision of the Patent Trial and Appeal Board ("Board") entered on March 3, 2021, in IPR2019-01533 (Paper No. 45) ("Final Written Decision"), and from all underlying findings, determinations, rulings, opinions, orders, and decisions regarding the *inter partes* review of U.S. Patent No. 8,142,447 B2 ("'447 patent"). A copy of the Final Written Decision is attached.

Pursuant to 37 C.F.R. § 90.2(a)(3)(ii), Petitioner states that the issues on appeal include, but are not limited to: the Board's determination that the Petitioner has not shown that claims 1-5 of the '447 patent are unpatentable; the Board's consideration of the prior art and other evidence in the record, including whether any reference is a printed publication that is prior art relative to the effective filing date of the patent claims or any putative date of prior invention; and the Board's factual findings, conclusions of law, or other determinations supporting or related to those issues, as well as all other issues decided adversely to Petitioner in any orders, decisions, rulings, and opinions.

This Notice of Appeal is being e-filed with the Clerk's Office for the United States Court of Appeals for the Federal Circuit, along with payment of the required

docketing fees. In addition, a copy of this Notice of Appeal is being filed simultaneously with the Patent Trial and Appeal Board.

Dated: March 11, 2021

Respectfully Submitted,

/s/ Ching-Lee Fukuda
Ching-Lee Fukuda
Reg. No. 44,334
SIDLEY AUSTIN LLP
787 Seventh Avenue
New York, NY 10019
P: (212) 839-7364
Attorney for Petitioner

CERTIFICATE OF FILING

I hereby certify that, in addition to being filed electronically through the Patent Trial and Appeal Board's End to End System (PTAB E2E), a copy of this Petitioner's Notice of Appeal was filed by Federal Express on March 11, 2021 with the Director of the United States Patent and Trademark Office, at the following address:

Director of the United States Patent and Trademark Office
c/o Office of the General Counsel
Madison Building East, 10B20
600 Dulany Street
Alexandria, VA 22314-5793

Dated: March 11, 2021

Respectfully Submitted,

/s/ Ching-Lee Fukuda
Ching-Lee Fukuda
Reg. No. 44,334
SIDLEY AUSTIN LLP
787 Seventh Avenue
New York, NY 10019
P: (212) 839-7364
Attorney for Petitioner

CERTIFICATE OF FILING

I hereby certify that a copy of this Notice of Appeal was filed electronically through the United States Court of Appeals for the Federal Circuit's CM/ECF system on March 11, 2021.

Dated: March 11, 2021

Respectfully Submitted,

/s/ Ching-Lee Fukuda
Ching-Lee Fukuda
Reg. No. 44,334
SIDLEY AUSTIN LLP
787 Seventh Avenue
New York, NY 10019
P: (212) 839-7364
Attorney for Petitioner

CERTIFICATE OF SERVICE

Pursuant to 37 C.F.R. § 42.6(e), I hereby certify that on this 11th day of March, 2021, I caused to be served a true and correct copy of the foregoing by electronic mail on the following counsel:

Erika Harmon Arner – erika.arner@finnegan.com
Daniel C. Tucker – daniel.tucker@finnegan.com
Arpita Bhattacharyya – arpita.bhattacharyya@finnegan.com
Benjamin A. Saidman – benjamin.saidman@finnegan.com
Alexander M. Boyer – alexander.boyer@finnegan.com
A. Grace Lock Mills – gracie.mills@finnegan.com
FinneganIntuitiveIPR@finnegan.com

Dated: March 11, 2021

Respectfully Submitted,

/s/ Ching-Lee Fukuda
Ching-Lee Fukuda
Reg. No. 44,334
Attorney for Petitioner

Trials@uspto.gov
571.272.7822

Paper No. 45
Entered: March 3, 2021

UNITED STATES PATENT AND TRADEMARK OFFICE

BEFORE THE PATENT TRIAL AND APPEAL BOARD

AURIS HEALTH, INC.,
Petitioner,

v.

INTUITIVE SURGICAL OPERATIONS, INC.,
Patent Owner.

IPR2019-01533
Patent 8,142,447 B2

Before ERICA A. FRANKLIN, ULRIKE W. JENKS, and JAMES A. WORTH, *Administrative Patent Judges*.

JENKS, *Administrative Patent Judge*.

JUDGEMENT

Final Written Decision
Determining No Challenged Claims Unpatentable
35 U.S.C. § 318

I. INTRODUCTION

This is a Final Written Decision in an *inter partes* review challenging the patentability of claims 1–5 of U.S. Patent No. 8,142,447 B2 (Ex. 1001, "the '447 patent"). We have jurisdiction under 35 U.S.C. § 6.

Petitioner has the burden of proving unpatentability of a claim by a preponderance of the evidence. 35 U.S.C. § 316(e) (2018). Having reviewed the arguments of the parties and the supporting evidence, we find that Petitioner has not demonstrated by a preponderance of the evidence that the challenged claims are unpatentable.

A. Procedural Background

Auris Health, Inc. ("Petitioner" or "Auris") filed a Petition requesting an *inter partes* review of claims 1–5 of the '447 patent. Paper 1 ("Pet."). Intuitive Surgical Operations, Inc. ("Patent Owner" or "Intuitive") timely filed a Preliminary Response to the Petition. Paper 8 ("Prelim. Resp."). In view of the then-available, preliminary record, we concluded that Petitioner satisfied the burden, under 35 U.S.C. § 314(a), to show that there was a reasonable likelihood that Petitioner would prevail with respect to at least one of the challenged claims. We instituted an *inter partes* review of claims 1–5 of the '447 patent on the asserted ground. Paper 9 ("Dec."), 25. Patent Owner timely filed a Response. Paper 14 ("PO Resp."). Petitioner filed a Reply ("Pet. Reply," Paper 26) and Patent Owner filed a Sur-reply ("Sur-reply," Paper 35). A hearing was held on December 4, 2020, and a transcript was entered into the record. Paper 43 ("Tr.").

B. Related Proceedings

The parties state the '447 patent has been asserted in the copending district court proceeding, *Intuitive Surgical, Inc. v. Auris Health, Inc.*, C. A. No. 18-1359-MN (D. Del.). Pet. 2; Paper 4, 1.

The parties identify that the related U.S. Patent No. 7,048,745 B2 ("the '745 patent") has been asserted in the district court proceeding *Intuitive Surgical, Inc. v. Vital Care Reps, Inc.*, No. 06-cv-06971 (N.D. Cal.). Pet. 2: Paper 4, 2.

Petitioner has also filed a petition for *inter partes* review of related U.S. Patent No. 8,491,701 B2 ("the '701 patent") in IPR2019-01532. Pet. 1.

Petitioner also identifies related patents and patent applications in the '447 patent family. *Id.*

C. The '447 Patent

The '447 patent relates to surgical tools for minimally invasive robotically enhanced surgical procedures. Ex. 1001, 1:38–41. The '447 patent explains that, in performing robotic surgery, different surgical tools are required, which leads to differences between the tool structures and the other components of the robotic system. *Id.* at 2:34–38. This requires time to reconfigure the robotic system to take advantage of a different tool, and to configure the master controller to control the degrees of motion of the tool. *Id.* at 2:43–49. According to the '447 patent, it would be desirable to reduce the delay associated with each tool change while improving the safety and reliability of the surgical system. *Id.* at 2:50–57.

The '447 patent describes a robotic surgical system that provides improved engagement structures for coupling robotic surgical tools with manipulator structures. Ex.1001, 3:26–28. Figure 4 of the '447 patent is reproduced below:

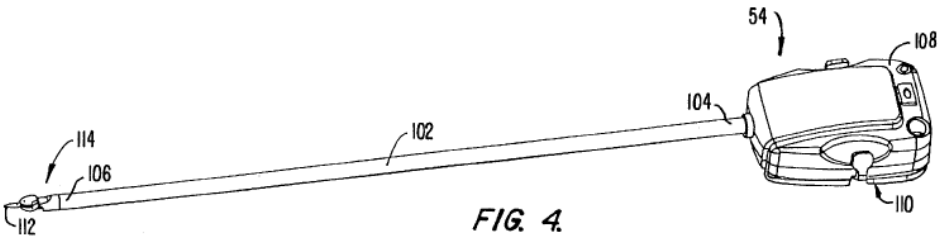

FIG. 4.

Figure 4 of the ’447 patent depicts an exemplary tool of the invention. *Id.* at 5:62–63. The tool will often comprise a surgical instrument suitable for manipulating tissue. *Id.* at 3:40–41. The specification describes, with reference to Figure 4, that tool 54 includes a shaft 102 having proximal end 104 and distal end 106. *Id.* at 9:17–18. Tool 54 includes surgical end effector 112 coupled to the distal end of shaft 102 at joint 114 that provides at least two degrees of freedom. *Id.* at 9:20–23. Housing 108 at the proximal end includes interface 110, which mechanically and electrically couples tool 54 to a manipulator structure. *Id.* at 9:31–33. An exemplary manipulator structure is depicted in Figure 2A, reproduced below:

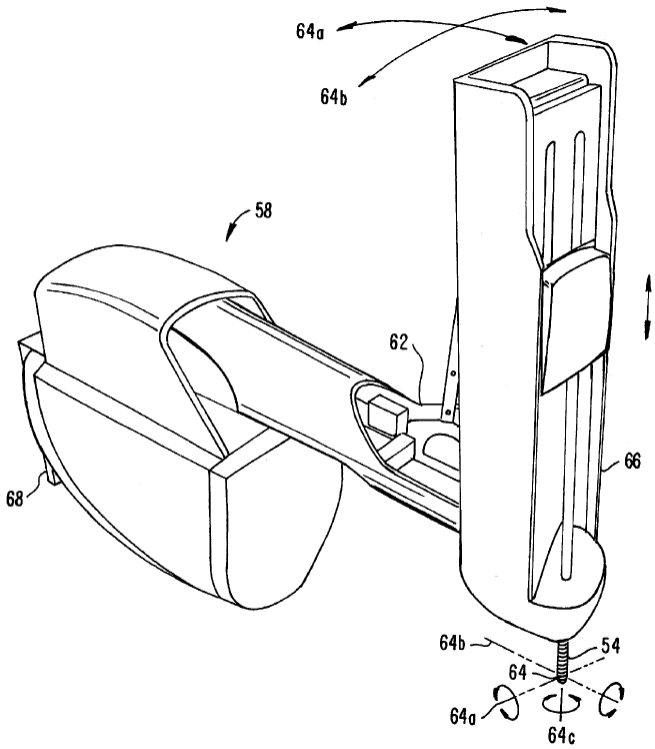

FIG. 2A.

Figure 2A depicts a robotic surgical manipulator. *Id.* at 5:53–54. Robotic manipulator 58 includes a linkage 62 that constrains movement of tool 54 so that tool 54 rotates around a point in space 64, so as to pivot about pitch axis 64a or to rotate about yaw axis 64b. *Id.* at 7:51–62.

Movement of the end effector is depicted in Figure 4A, reproduced below:

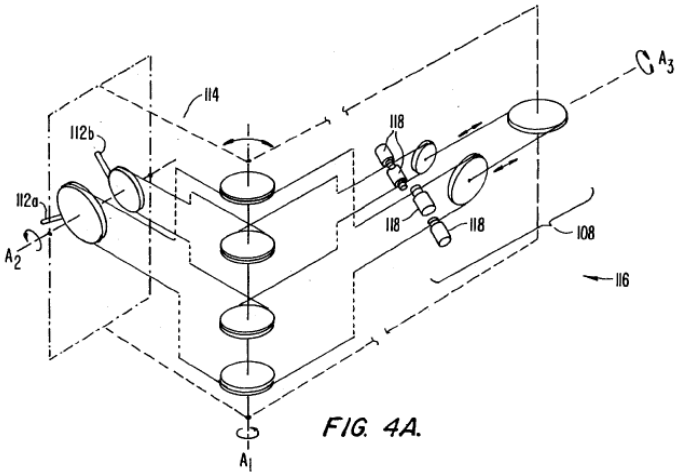

FIG. 4A.

Figure 4A is a schematic view of a drive system for the tool of Figure 4. Ex.1001, 5:64–65. Drive system 116 mechanically couples first and second end effector elements 112a, 112b to driven elements 118 of interface 110, and translates mechanical inputs from driven elements 118 into articulation of wrist 114 about first and second axes A1 and A2. *Id.* at 9:24–31. Interface 110 is depicted in Figure 6, reproduced below:

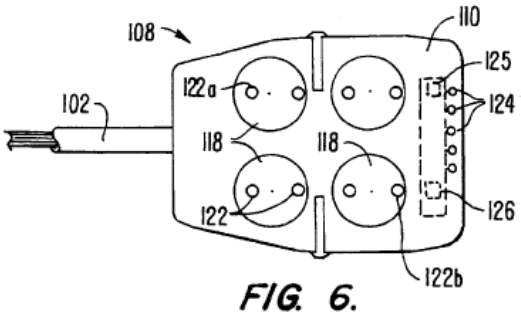

FIG. 6.

Figure 6 illustrates the mechanical and electrical interface of the tool of Figure 4. *Id.* at 6:1–2. Interface 110 includes a plurality of driven elements 118 that provide mechanical coupling of the end effector to drive motors mounted to manipulator 58. *Id.* at 10:17–20. In the embodiment of Figure 6, driven elements 118 each include a pair of pins 122 extending from a surface

thereof that couple with openings 140 in rotatable bodies 134 so as to align driven elements 118 of the tool with the drive elements of the holder. *Id.* at 10:20–22, 11:6–9. In an embodiment, rotatable bodies 134 are in adapter 128, as depicted in Figure 7B, reproduced below:

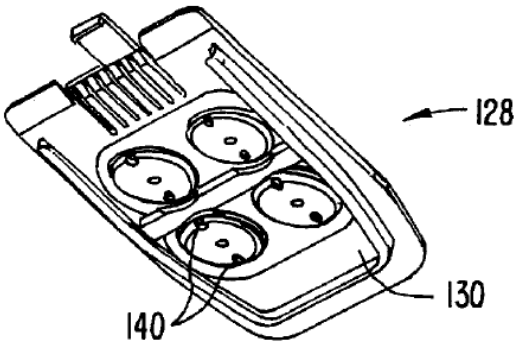

FIG. 7B.

Figure 7B illustrates an adapter for coupling the interface of Figure 6 to the surgical manipulator. *Id.* at 6:3–4. Coupling is depicted in Figure 14C, reproduced below.

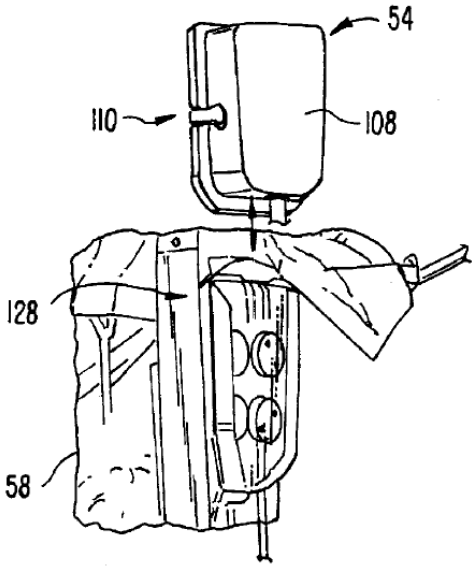

FIG. 14C.

Figure 14C illustrates the adapter of Figure 7B mounted to a manipulator arm, and depicts mounting the tool of Figure 4 onto the adapter. Ex.1001,

6:26–28. In particular, mounting of tool 54 to adapter 128 includes inserting the surgical end effector distally through cannula 72 (*see* Figure 2B) and sliding interface 110 of tool 54 into engagement with a mounted adapter. *Id.* at 16:58–62. The tool can be removed and replaced by reversing the above tool mounting procedure and mounting an alternative tool. *Id.* at 16:62–64.

In use, a controller grasped by the surgeon provides a manual input device so that the robotic surgery system allows the surgeon to manipulate the surgical tools as if the handle in the surgeon's hand and the end effector in the surgeon's field of view define a single contiguous surgical instrument. *Id.* at 7:9–13, 12:12–16.

D. Illustrative Claim

Petitioner challenges claims 1–5 of the '447 patent, of which claims 1–4 are the independent claims. Claim 1 is illustrative and is reproduced below:

> 1. A method for performing robotic surgery on a patient, the method comprising coupling a surgical instrument to a robotic surgical system, the surgical system having a drive assembly operatively coupled to a control unit operable by inputs from an operator, the drive assembly having a plurality of actuator bodies which are movable in response to operator inputs, the surgical instrument comprising:
>
> a proximal portion and a distal portion, the proximal portion comprising a first plurality of movable engaging interface bodies;
>
> at least one distal end effector member;
>
> a plurality of joints, at least one of the joints being coupled to the at least one distal end effector member, the joints being coupled to the plurality of movable engaging interface bodies by a plurality of drive members; the method further comprising:
>
> coupling the movable engaging interface bodies to the plurality of actuator bodies;

moving a robotic manipulator arm supporting the instrument in at least one degree of freedom; and

moving the actuator bodies in response to operator inputs.

Ex. 1001, 17:46–67. Claims 2–4 are also independent claims and similarly recite a robotic manipulator arm.

E. The Asserted Ground of Unpatentability

Petitioner asserts that claims 1–5 are unpatentable based on the following ground:

Claims Challenged	**35 U.S.C. §[1]**	**References/Basis**
1–5	103(a)	Smith[2] and Faraz[3]

Petitioner also relies on the Declaration of Dr. William Cimino (Ex. 1003) to support its challenge. Patent Owner relies on the Declaration of Dr. Howie Choset (Ex. 2001) to support its positions.

II. ANALYSIS

A. Person of Ordinary Skill in the Art

Petitioner asserts that a person of ordinary skill in the art at the time of the invention would include someone with a good working knowledge of robotics and medical devices. Pet. 10. Petitioner also asserts that a person of ordinary skill in the art at the time of the invention would include someone

---

[1] The relevant sections of the Leahy-Smith America Invents Act ("AIA"), Pub. L. No. 112–29, 125 Stat. 284 (Sept. 16, 2011), took effect on March 16, 2013. Because the application from which the '447 patent issued was filed before that date, our citations to Title 35 are to its pre-AIA version. *See* MPEP § 2159 (9th ed. rev. 11.2013, June 2020).
[2] Smith et al., US 5,624,398, issued Apr. 29, 1997 ("Smith," Ex. 1004).
[3] Faraz et al., US 5,824,007, issued Oct. 20, 1998 ("Faraz," Ex. 1005).

having an undergraduate education in electrical engineering, mechanical engineering, robotics, biomedical engineering, or a related field of study, along with about two years of experience in academia or industry studying or developing robotics or medical devices such as robotic surgical systems. *Id.* (citing Ex. 1003 ¶ 31). Patent Owner does not contest Petitioner's proffered definition and does not propose its own definition of the level of ordinary skill in the art in the Response. *See generally* PO Resp.

Because Petitioner's definition of one of ordinary skill in the art is reasonable and consistent with the '447 patent and the prior art of record, we adopt Petitioner's definition. *See Okajima v. Bourdeau*, 261 F.3d 1350, 1355 (Fed. Cir. 2001) (explaining that specific findings regarding ordinary skill level are not required "where the prior art itself reflects an appropriate level and a need for testimony is not shown" (quoting *Litton Indus. Prods., Inc. v. Solid State Sys. Corp.*, 755 F.2d 158, 163 (Fed. Cir. 1985))).

B. Claim Construction

Where, as here, a petition is filed on or after November 13, 2018, the Board applies the same claim construction standard that would be used to construe the claim in a civil action under 35 U.S.C. § 282(b). 37 C.F.R. § 100(b) (2019). Under that standard, claim terms "are generally given their ordinary and customary meaning" as understood by a person of ordinary skill in the art at the time of the invention. *Phillips v. AWH Corp.*, 415 F.3d 1303, 1312–13 (Fed. Cir. 2005) (en banc).

Petitioner proposes constructions for several terms, but contends that "the Board likely will not need to adopt specific constructions to resolve any dispute." Pet. 11. Patent Owner does not propose any constructions for any claim terms in its Response. *See generally* PO Resp.

On November 20, 2019, after Petitioner filed the Petition but before the Patent Owner filed the Preliminary Response, the district court in the copending district court case, *Intuitive Surgical, Inc. v. Auris Health, Inc.*, No. 18-1359 (MN) (D. Del.), held a claim construction hearing. With our authorization, Petitioner submitted the transcript as an exhibit in this proceeding. Ex. 1011. At the end of the hearing, the district court determined the term "end effector" in the '447 patent means a "device at the end of an instrument used in surgery designed to interact with the environment." *Id.* at 117:21–118:21.

In the Institution Decision we acknowledged the district court's claim construction (Ex. 1011) and determined that it was unnecessary to expressly construe any claim terms for the purpose of rendering the Decision. *See* Dec. 10–11. We determine here again that we do not need to construe any claim terms for this Final Decision.

C. Obviousness over Smith and Faraz

Petitioner asserts that claims 1–5 are unpatentable as obvious over Smith and Faraz. Pet. 15–75. Patent Owner opposes Petitioner's assertions. PO Resp. 15–94. Specifically, Patent Owner asserts that Petitioner has not set out a prima facie case of unpatentability for claims 1–5 (*id.* at 79–94), and that Faraz is not prior art at least to claim 2 (*id.* at 15–79).

i. Smith (Ex. 1004)

Smith relates to a robotic surgical system. Ex. 1004, 1:7–9. Figure 1B of Smith is reproduced below:

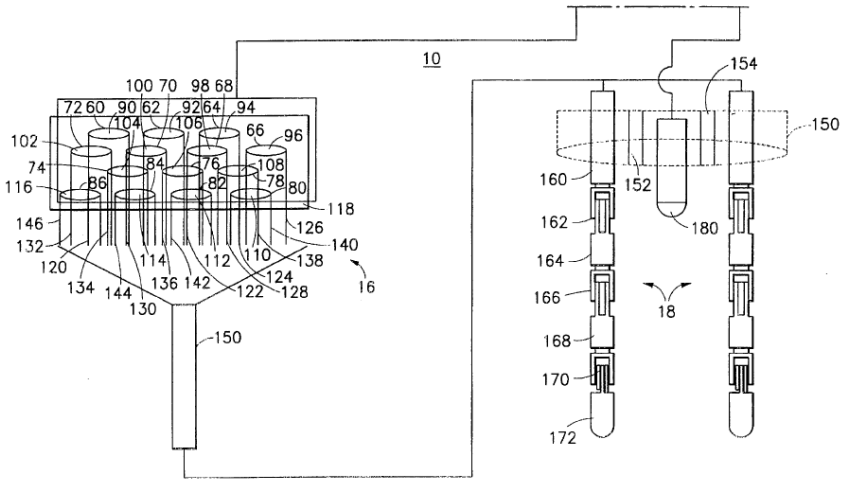

FIG. 1B

Figure 1B is a schematic illustration of one embodiment of an endoscopic robotic surgical tool. *Id.* at 5:52–53. Smith's system includes an exoskeleton encoder worn by a practitioner (see Figure 1A) and a pair of remote robot arms 18 at the distal end of a multi-lumen tube 150. Id. at 6:46–49, 6:67–7:2. An end effector (e.g., grippers, cutters, dissectors, bioptomes) is mounted to the end of each robot arm. *Id.* at 4:40–41, 18:59–65. The end effectors may be interchanged during the course of a procedure by detaching the multilumen tube/robot arms assembly from the servo motor arrays. *Id.* at 19:2–5. The encoder, worn by the practitioner, has transducers that register the practitioner's rotational and flexional movements. Id. at 6:50–59. The transducers are coupled to a control circuit that provides outputs to an array of servo motors, which are coupled to pulleys that are arranged in a pulley tray. *Id.* at 6:59–64, 7:26–31. In particular, splined shafts of the servo motors engage receiving bores of the pulleys and are "self-aligning" with the receiving bores, and the trays are arranged so that the pulley tray is sandwiched between two servo motor arrays. *Id.* at 14:53–64.

Figure 22 of Smith, reproduced below, depicts a sandwiched assembly:

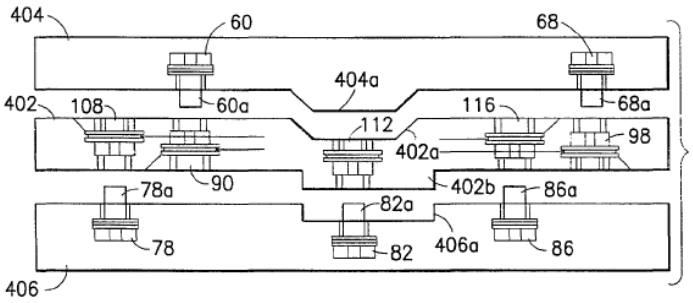

FIG. 22

Figure 22 is a side view of top and bottom servo motor arrays 404 and 406, respectively, and pulley tray 402. Ex. 1004, 6:14–15.

The assembly is attached to other components as in Figure 23, reproduced below:

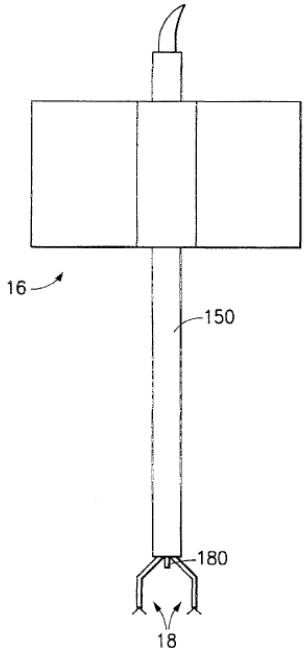

FIG. 23

Figure 23 depicts an assembled servo motor tray 16, multi-lumen tube 150, and robot arms 18. Ex. 1004, 6:16–17. In Figure 23, the pulley tray and servo motor trays are sandwiched together as servo system 16 and attached to multi-lumen tube 150. *Id.* at 14:42–44, 57–67. Smith teaches that the

servo motor tray "may be supported by an adjustable clamping means connected to the operating table or other support." *Id.* at 8:46–48.

The pulleys in the pulley tray are each connected to a tendon loop, which are fed through the multi-lumen tube to the remote robot arms at the distal end of the tube. Ex. 1004, 6:67–7:2, 14:41–44. The tendons are depicted in Figure 34, reproduced below.

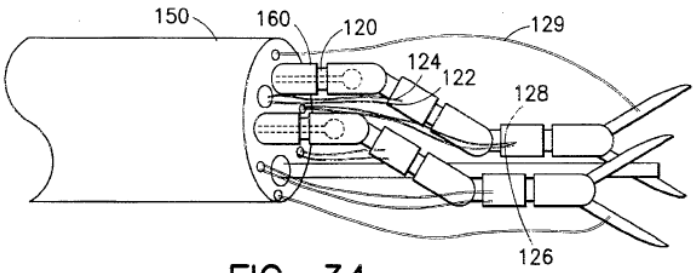

FIG. 34

Figure 34 depicts two robotic arms extending from the distal end of a multi-lumen tube. *Id.* at 6:40–41. Each of the remote robot arms has three rotational joints and three flexional joints and a gripper, such that the tendon loops are each connected to one of the joints and the gripper on each robot arm. *Id.* at 7:3–9. Based on how the tendons are connected to the joints, Smith's arrangement is rotatable about an axis of rotation and also is rotatable about an axis which is perpendicular to the axis of rotation. *Id.* at 16:65–17:12.

ii. Faraz (Ex. 1005)

Faraz relates to an adjustable surgical stand. Ex. 1005, 1:1. Figure 1 of Faraz is reproduced below:

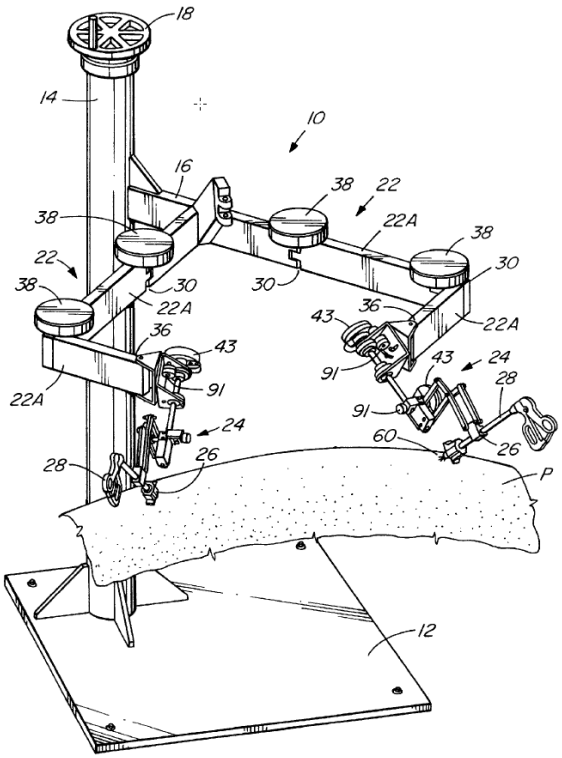

FIG. 1

Figure 1 depicts a surgical support stand. *Id.* at 2:39–40. Faraz's stand 10 has base 12 that supports pillar 14 on which arm support 16 is slidably attached. *Id.* at 2:57–59. Arm support 16 supports a plurality of arms 22 each having an implement holding wrist 24 at end 36 for implement holder 26, which receives surgical instrument 28. *Id.* at 3:5–15. Arms 22 each are pivotally mounted to arm support 16 about joints 30, which allow free distal ends 36 of arms 22 to be moved. *Id.* at 3:27–30. According to Faraz, "[s]tand 10 is well adapted for use as a basis for a robotic surgery device," and "motors or other actuators could be connected using known means to drive and control the motion of any or all of the joints in stand 10." *Id.* at 6:23–29.

iii. Analysis

"[O]bviousness concerns whether a skilled artisan not only could have made but would have been motivated to make the combinations or

modifications of prior art to arrive at the claimed invention." *Belden Inc. v. Berk-Tek LLC*, 805 F.3d 1064, 1073 (Fed. Cir. 2015). The Federal Circuit emphasizes that it is improper to base an obviousness determination on what a hypothetical person of ordinary skill in the art could have done to combine the references, rather than what would have motivated the skilled artisan to do so. *InTouch Techs., Inc. v. VGo Commc'ns, Inc.*, 751 F.3d 1327, 1352 (Fed. Cir. 2014) ("[The expert's] testimony primarily consisted of conclusory references to her belief that one of ordinary skill in the art *could* combine these references, not that they *would* have been motivated to do so.").

a) Petitioner's Contentions

Petitioner asserts that each limitation of claims 1–5 are taught by the combination of Smith and Faraz. Pet. 15–75; Pet. Reply 21–29. Regarding claim 1, Petitioner asserts that the Smith discloses each limitation of claim 1 except "moving a robotic manipulator arm supporting the instrument in at least one degree of freedom." Pet. 23–24. For example, Petitioner contends that Smith teaches coupling a surgical instrument having an end effector to a robotic surgical system having a drive assembly. *Id.* at 23–32. In support of Petitioner's assertion, Petitioner provides an annotated version of Figure 23 of Smith, reproduced below:

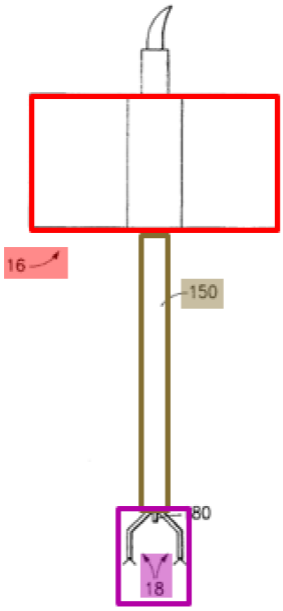

FIG. 23

Petitioner's annotated Figure 23 above depicts a surgical instrument comprising a pulley tray located on the proximal end (in red), a multi-lumen tube (in brown), and end effectors on the distal end (in purple). Id. at 23–24 (citing Ex. 1004, 6:17–18). Petitioner also reproduces an annotated version

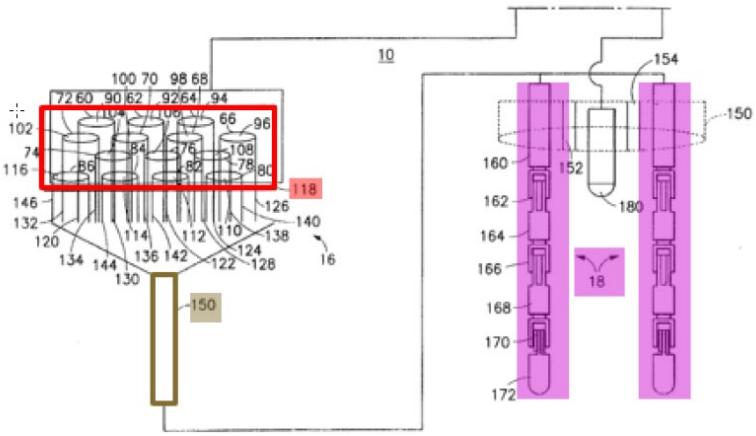

FIG. 1B

of Figure 1B:

Petitioner's annotated Figure 1B above depicts servo tray 16 having pulley tray 118 (in red) on the proximal side of the multi-lumen tube 150 (in brown) and the instrument arms 18 (in purple) on the distal end of the multi-

lumen tube 150. Pet. 28–29 (citing Ex. 1004, 6:62–7:2, Fig. 1B). Petitioner contends that Smith thus discloses a surgical system having "a drive assembly" (e.g., the servo motor array) coupled to a control circuit (e.g., control circuit 14), and a "surgical instrument" (e.g., pulley tray 118, multi-lumen tube 150 and instrument arms 18) and that the instrument arms have grippers or other end effectors at the distal end of the multi-lumen tube. *Id.* at 27–32 (citing Ex. 1003 ¶¶ 96–110).

Petitioner admits that Smith does not expressly teach the limitation of "moving a robotic manipulator arm supporting the instrument in at least one degree of freedom." Pet. 38. Petitioner, however, asserts that Smith renders the limitation obvious in light of Faraz. *Id.* at 38–41. Petitioner asserts that Smith's servo motor tray may be connected to an operating table "or other support." *Id.* at 38 (citing Ex. 1004, 8:46–48) (emphasis omitted); *see* Pet. Reply 21. Petitioner asserts that Faraz teaches its stand is "well adapted for use as a basis for a robotic surgery device" and has actuators for driving and controlling the joints of the stand. Pet. 38–39 (citing Ex. 1005, 6:23–24, 27–29). Petitioner therefore asserts that Faraz teaches a stand having a robotic manipulator arm supporting the instrument in at least one degree of freedom. *Id.*

Petitioner argues that one of ordinary skill in the art would have had a reason to combine Smith and Faraz because a skilled artisan would have understood that an actuated robotic manipulator arm, as described by Faraz, would reduce the number of assistants during a procedure and/or reduce the workload of the assistants. Pet. 39 (citing Ex. 1003 ¶ 126; Ex. 1005, 6:34–36). Smith teaches that the practitioner "may direct the assistant to relocate the robot arms" when necessary. Ex. 1004, 8:48–50; *see also id.* at 9:6–8. Given that teaching, Petitioner argues that an ordinary artisan would have

looked for "other support[s]" that would reduce the number and/or workload of assistants in the operating room. Pet. 39 (citing Ex. 1003 ¶ 126).

Petitioner also argues that a person of ordinary skill in the art would have understood that Smith's servo motor tray could be adjustably clamped to the adjustable surgical stand disclosed by Faraz. Pet. 39–40 (citing Ex. 1003 ¶ 127; Ex. 1005, 1:60–2:1, 3:27–33, 6:15–21). According to Petitioner, a person of ordinary skill in the art would have found it obvious to incorporate Faraz's motorized or actuated robot arm into Smith as a matter of "routine engineering" to "improve the performance of the system the [person of ordinary skill in the art] was trying to design." *Id.* at 22, 41 (citing Ex. 1003 ¶¶ 84, 123–128).

b) Patent Owner's Contentions

Patent Owner contends that Petitioner has failed to establish a sufficient motivation to modify Smith in view of Faraz. PO Resp. 79. According to Patent Owner, Smith at best provides motivation to use Faraz's non-robotic surgical stand, but the ordinary artisan would not have been motivated to use a roboticized surgical stand. *Id.* at 81 (citing Ex. 2001 ¶ 98 (Choset declaration)). In a surgical working environment, at the time of the invention when surgeons were skeptical about performing robotic surgery in the first place, there would have been no reason to further complicate Smith's already complex robotic surgical system with a roboticized surgical stand. *Id.* (citing Ex. 2001 ¶ 99; Ex. 2012, 2 (Himpens telesurgery article)).

Patent Owner contends that Faraz's surgical instrument is positioned in such a way that it does not move around the entry point of the body, and "this feature of Faraz would have further dissuaded one of ordinary skill from placing Smith's servo-pulley system at the end of Faraz's robotic surgical stand." PO Resp. 85–86 (citing Ex. 2001 ¶ 107). Patent Owner

explains that "Faraz's goal of only allowing an instrument to move about a single fixed point negates the benefits of Petitioner's proposed modification" which is to reduce the number of assistants. *Id.* at 86 (citing Ex. 2001 ¶ 108).

> [G]iven that Faraz's goal was to limit the movement of instruments at the end of its arms, which in this case would be Smith's surgical instrument, one of ordinary skill would not have been motivated to use Faraz's robotic surgical stand where any non-robotic stand serves the same purpose without the added complexity.

Id. at 86–87 (citing Ex. 2001 ¶ 108).

c) Petitioner's Reply

According to Petitioner, Patent Owner's arguments contradict Faraz's teaching that the stand could reduce the number of assistants. Pet. Reply 22. Petitioner argues that Patent Owner's "argument also is legally incorrect, as it is based on Choset's conclusion that the invention of Smith 'is imaginary' and 'would [not] ever reduce to practice.'" *Id.* (citing Ex. 1015, 70:19–71:12, 71:22–72:7) (Choset deposition) (alteration in original).

Petitioner contends that both of Patent Owner's experts acknowledged that the '447's robotic arms were not inventive. Pet. Reply 23 (citing Ex. 1015, 141:15–142:8; Ex. 1016, 55:14–56:8 (Cooper deposition)). Petitioner argues that Patent Owner ignores what is already known in the art such as Wang[4] that "discloses a 'medical system which has a robotic arm

---

[4] In Petitioner's Reply and during oral argument, Petitioner contends that Patent Owner never addressed the combination of Smith with Wang (Ex. 1008). *See* Tr. 53–55; Pet. Reply 23. However, as we pointed out during oral argument, Petitioner did not include a ground of unpatentability based on this combination in the Petition. *See* Tr. 53–55; *Acceleration Bay, LLC v. Activision Blizzard Inc.*, 908 F.3d 765, 975 (Fed. Cir. 2018); *Belden Inc. v. Berk-Tek LLC*, 805 F.3d 1064, 1078 (Fed. Cir. 2015).

that can move a surgical instrument.'" *Id.* at 23 (citing Ex. 1008, Abstract, 2:43–52).

Petitioner argues that it explained in the Petition that Smith could be combined with Faraz "such that '[t]he servo motor tray may be supported by an adjustable clamping means connected to' an instrument arm.'" Pet. Reply 24 (citing Pet. 74) (alteration in original). Contrary to Patent Owner's contentions that there are no remaining degrees of freedom to control Faraz's stand, Petitioner argues that "Smith provides additional sources of potential practitioner input including a foot switch and finger switch." *Id.* at 25 (citing Ex. 1004, [5] 20:2–5).

d) Patent Owner's Sur-reply

In its Sur-reply, Patent Owner maintains the position that Petitioner's recited combination lacks motivation for making the combination. *See* Sur-reply 30–33. Specifically, Patent Owner contends that they have provided unrebutted testimony by Dr. Choset that establishes that the medical community was skeptical about robotic surgery at the priority date, and because of this skepticism one of skill in the art would not be motivated to make a system more complicated. *Id.* at 30 (citing Ex. 2001 ¶ 99).

Patent Owner responds to Petitioner's contention that Dr. Choset's opinion is based on Smith's "imaginary" disclosure is as follows:

> The two opinions . . . are unconnected. Dr. Choset's deposition testimony regarding *Smith*'s "imaginary" disclosure related to the "user interface that goes around [the user's] chest." (Ex. 1015, 71:22-72:7.) That testimony was unrelated to his opinion that one of ordinary skill would not have combined two robotic systems given the unestablished nature of robotic surgery. (Choset ¶¶ 97-101.) *Smith*'s undisputed disclosure of a

[5] Petitioner's Reply cites Ex. 1005 which appears to be an error.

complicated system supports Dr. Choset.

Sur-reply 31.

According to Patent Owner, it was never disputed that surgical robots were known in 1997, but Dr. Choset opined that Petitioner failed to establish a reason why "one of ordinary skill would further modify *Smith*'s already large, complex robotic surgical system . . . to add yet another robotic system in the form of *Faraz*'s 'robotic' surgical stand to perform robotic surgery on a human patient." Sur-reply 31 (citing Ex. 2001 ¶ 100) (alteration in original).

Patent Owner contends that the complexity of the modifications proposed by Petitioner would have dissuaded one of ordinary skill in the art at the time of the invention to make the modifications given "the medical community's skepticism toward robotics at the time." Sur-reply 32 (Ex. 2001 ¶¶ 99–111). Patent Owner contends that Dr. Choset's testimony remains unrebutted. Sur-reply 32 (Ex. 2001 ¶¶ 99–111).

According to Patent Owner, the foot switch disclosed in Smith does not control an additional robotic element, but instead Smith teaches that the foot switch or the pistol grip switch can be used to toggle between displays. Sur-reply 32 (citing Ex. 1004, 20:2–5). In addition, Dr. Choset's testifies "that there are ***no remaining inputs*** [in Smith] to control Faraz given that even the foot and finger switches have dedicated uses." *Id.* (citing Ex. 2001 ¶ 104). Additionally, Patent Owner contends that "Petitioner also fails to explain how a single 'switch' would control a multi-joint robotic stand." *Id.*

e) Discussion

The dispute between the parties is whether a person of ordinary skill in the art at the time of the invention would have been motivated to modify Smith with the robotic surgery stand of Faraz. Patent Owner provides an

additional defense that Faraz is not prior art at least to claim 2. We begin by addressing motivation.

(1) Motivation

Based on our review of the arguments and evidence, we determine that Petitioner has not provided a sufficient evidentiary bases to establish by a preponderance of the evidence that the claims are unpatentable when weighed against Patent Owner's unrebutted and persuasive expert testimony.

Patent Owner contends that Smith's teaching that the servo motor may be clamped to an operating table or other support would not have understood that statement to mean adding it to a robotic stand due to the increased complexity of the total system. PO Resp. 80 (citing Ex. 2001 ¶ 98). Dr. Choset attests that at the time of the invention there was great skepticism with respect to robotic surgery. Ex. 2001 ¶ 99 ("'When I first introduced to the local ethical committee the demand to perform 'robotic surgery' in my clinical practice . . . , the members of the committee initially assumed I had gone insane (which, in hindsight, may very well have been the case).' (Ex. 2012, 2)." (alteration in original)); Ex. 2012 (describing the experience of Dr. Himpens preforming the first telesugical procedure in the world). Dr. Choset further explains that there was skepticism in the medical journal community delaying the publication of the first robotic telesurgery event. Ex. 2001, ¶ 99 ("Following the surgery, the surgeon 'submitted the report on the world premiere to several journals including the *New England Journal of Medicine* and the *Lancet*, but the paper was both times refused because it was judged "inappropriate" or "*very unlikely to have actually happened*."' (Ex. 2012, 3 (emphasis added).)"). We credit Dr. Choset's testimony that at the priority date of the invention there was great skepticism for performing telesurgery, and because of this skepticism one of ordinary skill in the art at

the time of the invention would not have been compelled to complicate Smith's system further by including a robotic surgical stand. Ex. 2001 ¶ 100; PO Resp. 81; *see* Sur-reply 30–32.

We are not persuaded by Petitioner's contention that Patent Owner's arguments ignores "that surgical robots—including the combination of surgical instruments and robotic arms—were already known." Pet. Reply 22. Patent Owner never disputes that surgical robots were known in 1997. Sur-reply 31; Ex. 1015, 141:18–19, 142:2–3 (Dr. Choset testified that "[r]obotics arms were known prior to 1996 in the industrial manufacturing sector quite well. . . . Robodoc was likely known among a small set of people in the medical world prior to 1996."). The issue, therefore, is not whether other robotic arms were known or even used in the prior art; the issue is whether there would have been motivation to modify Smith's surgical system with the robotic surgery stand of Faraz.

We agree with Patent Owner that Petitioner does not sufficiently articulate how one would have combined Smith and Faraz to achieve the stated goal of reducing the number of assistants. PO Resp. 82 (citing *ActiveVideo Networks, Inc. v. Verizon Commc'ns, Inc.*, 694 F.3d 1312, 1327 (Fed. Cir. 2012); Ex, 2001 ¶¶ 102–112); Sur-reply 31 (citing Ex. 2001 ¶ 100). Here, Dr. Choset explains that Smith's exoskeleton has no remaining input degrees of freedom to control Faraz's stand, and that alone would not have motivated the ordinarily skilled artisan to modify Smith's system to achieve the stated goal of reducing the number of assistants. *See* Ex. 2001 ¶ 104; *see* Sur-reply 32–33.

Patent Owner explains, and we agree, that the proposed combination would have limited a physician's ability to manipulate Smith's servo-pulley tray and related components. PO Resp. 85 (citing Ex. 2001 ¶ 107).

Dr. Choset explains the limitation of Faraz's stand when used during surgery is that it "hold[s] a surgical instrument fixed about an incision point on a patient, [and therefore,] one of ordinary skill would not [have been] motivated to connect an entire new robotic surgery system to the surgical implement holder in place of that surgical instrument." Ex. 2001 ¶ 106. Dr. Choset explains that "[t]he result of Petitioner's combination would be that Faraz's surgical stand would have a limited ability to relocate Smith's servopulley system, other than to manipulate the servo-pulley system about a single stationary point." *Id.* at ¶ 107. Dr. Choset, therefore, concludes that "*Faraz'*s robotic surgical stand would add nothing over a non-robotic linkage except added complexity and limited motion." *Id.*

Dr. Choset explains that adding additional joints in order to obtain an additional degree of freedom also adds further complexity and increases the torque on all joints in the system. According to Dr. Choset, "[t]his torque makes it more difficult for the mechanical components in each joint to work with the amount of precision that is required for surgery." Ex. 2001 ¶ 110. "This additional torque also creates an effect known as 'slop,' which makes it increasingly difficult to track the position of each joint, as joint components and linkages bend or gear components experience backlash." *Id.* at ¶ 111. Here, Dr. Choset explains the addition of joints to add an additional degree of freedom to the system comes at the expense of precision needed to perform surgery, further supporting the position that there is no motivation for the combination.

Petitioner does not address Patent Owner's contention that the inclusion of additional joints would come at the expense of precision, arguing instead that an additional degree of freedom can be achieved by including other inputs. *See e.g.*, Pet. Reply 25 ("Smith provides additional

sources of potential practitioner input including a foot switch and finger switch.”).

Based on our review, and in the absence of rebuttal evidence, we agree with Patent Owner that the evidence in the record supports the position there is no motivation to complicate Smith’s system when there is skepticism at the time of the invention for using robotic systems during surgery in the first place. *See* PO Resp. 81 (citing Ex. 2001 ¶ 99; Ex. 2012, 2); Sur-reply 30–32. Having considered the arguments and evidence, we determine, that Petitioner has not shown by preponderance of the evidence that claims 1–5 of the ’447 patent are unpatentable as obvious over Smith and Faraz.

(2) Faraz as prior art

Our determination above (II.C.iii.e.1), that the preponderance of the evidence of record does not support Petitioner’s contention that claims 1–5 are unpatentable as obvious over Smith and Faraz disposes of all the challenged claims. Thus, we need not reach Patent Owner’s alternate defense that Faraz is not prior art at least to claim 2.

f) Summary

Upon consideration of the full record, we determine that Petitioner has not established by a preponderance of the evidence that a skilled artisan would have been motivated to combine the teachings of Smith and Faraz.

III. CONCLUSION

For the foregoing reasons, we conclude that Petitioner has not established by a preponderance of the evidence that claims 1–5 of the ’447 patent are unpatentable.

Claims	35 U.S.C. §	Reference(s)/Basis	Claims Shown Unpatentable	Claims Not Shown Unpatentable
1–5	103(a)	Smith, Faraz		1–5

IV. ORDER

In consideration of the foregoing, it is hereby:

ORDERED that claims 1–5 of the ’447 patent are not determined to be unpatentable;

FURTHER ORDERED that, because this is a final written decision, parties to this proceeding seeking judicial review of our Decision must comply with the notice and service requirements of 37 C.F.R. § 90.2.

PETITIONER:

Ching-Lee Fukuda
Thomas Broughan
Sharon Lee
Ketan Patel
SIDLEY AUSTIN LLP
clfukuda@sidley.com
tbroughan@sidley.com
Sharon.lee@sidley.com
Ketan.patel@sidley.com

PATENT OWNER:

Erika Arner
Daniel Tucker
Arpita Bhattacharyya
Benjamin Saidman
Alexander Boyer
Gracie Mills
FINNEGAN, HENDERSON, FARABOW,
GARRETT & DUNNER, LLP
Erika.arner@finnegan.com
Daniel.tucker@finnegan.com
Arpita.bhattacharyya@fainnegan.com
Benjamin.saidman@finnegan.com
Alexander.boyer@finnegan.com
Gracie.mills@finnegan.com