UNITED STATES PATENT AND TRADEMARK OFFICE

BEFORE THE PATENT TRIAL AND APPEAL BOARD

MEDACTA USA, INC., PRECISION SPINE INC., and LIFE SPINE, INC.

Petitioners

v.

RSB SPINE, LLC,

Patent Owner

Case IPR2020-00265

Patent 6,984,234

PETITIONERS' NOTICE OF APPEAL

Pursuant to 35 U.S.C. §§ 141, 142 and 319 and 37 C.F.R. § 90.2(a), Petitioners Life Spine, Inc. and Precision Spine, Inc. ("Petitioners") hereby respectfully give notice that they appeal to the United States Court of Appeals for the Federal Circuit from the Patent Trial and Appeal Board's ("Board") Final Written Decision entered on April 15, 2021 (Paper No. 47) (the "Final Written Decision") (Exhibit A), as well as from all other underlying orders, decisions, rulings, and opinions that are adverse to Petitioners.

For the limited purpose of providing the Director with the information requested in 37 C.F.R. § 90.2(a)(3)(ii), the issues on Petitioners' appeal may include, but are not limited to:

(1) the Board's determination of no unpatentability as to claims 35, 37 and 39; and

(2) any and all findings or determinations supporting or related to the aforementioned issues, as well as other issues decided adversely to Petitioners in any orders, decisions, rulings or opinions.

Pursuant to 37 C.F.R. § 90.3(b), this Notice of Appeal is timely, having been duly filed within 63 days after the Final Written Decision entered April 15, 2021.

Simultaneous with the submission, a copy of the Notice of Appeal is being filed electronically with the Patent Trial and Appeal Board. In addition, a copy of

this Notice of Appeal, along with the required docketing fees, is being electronically filed with the Clerk's Office for the United States Court of Appeals for the Federal Circuit.

Dated: June 17, 2021

Respectfully submitted,

/Jeffrey N. Costakos/

Jeffrey N. Costakos (Reg. No. 34,144)
Matthew W. Peters (*pro hac vice*)
FOLEY & LARDNER LLP
777 E. Wisconsin Avenue
Milwaukee, Wisconsin 53202
Telephone: (414) 271-2400
Fax: (414) 297-4900
jcostakos@foley.com
mpeters@foley.com

Attorneys for Petitioner Life Spine, Inc.

/s/Timothy Devlin
Timothy Devlin (Reg. No. 41,706)
Stephanie Berger (*pro hac vice*)
DEVLIN LAW FIRM LLC
1526 Gilpin Ave
Wilmington, DE 19806
Phone: (302) 449-9010
TD-PTAB@devlinlawfirm.com
sberger@devlinlawfirm.com

Attorneys for Petitioner Precision Spine, Inc.

CERTIFICATE OF SERVICE

Pursuant to 37CFR §§ 42.6(e)(4) and 42.205(b), the undersigned certifies that on June 17, 2021, a complete and entire copy of Petitioners' Notice of Appeal was provided via email to the Patent Owner's by serving the correspondence address of record as follows:

emilch@cooley.com
fpietrantonio@cooley.com
jvolkfortier@cooley.com
jvantassel@cooley.com
dknight@cooley.com
RSB-Spine-IPR@cooley.com

I hereby certify that, in addition to being filed electronically through the Board's E2E System, the original version of the foregoing Notice of Appeal was filed by hand on June 17, 2021, with the Director of the United States Patent and Trademark Office, at the following address:

Director of the United States Patent and Trademark Office
c/o Office of the General Counsel
Madison Building East, 1 OB20
600 Dulany Street
Alexandria, VA 22314-5793

I hereby certify that on June 17, 2021, a true and correct copy of the foregoing Notice of Appeal, along with a copy of the Final Written Decision, was filed electronically with the Clerk's Office of the United States Court of Appeals for the Federal Circuit, at the following address:

United States Court of Appeals for the Federal Circuit

717 Madison Place, N.W., Suite 401
Washington, DC 20005

Dated: June 17, 2021

Respectfully submitted,

/Jeffrey N. Costakos/

Jeffrey N. Costakos (Reg. No. 34,144)
FOLEY & LARDNER LLP
777 E. Wisconsin Avenue
Milwaukee, Wisconsin 53202
Telephone: (414) 271-2400
Fax: (414) 297-4900

EXHIBIT A

Trials@uspto.gov
571-272-7822

Paper 47
Entered: April 15, 2021

UNITED STATES PATENT AND TRADEMARK OFFICE

BEFORE THE PATENT TRIAL AND APPEAL BOARD

MEDACTA USA, INC., PRECISION SPINE, INC.,
and LIFE SPINE, INC.,
Petitioner,

v.

RSB SPINE, LLC,
Patent Owner.

IPR2020-00265
Patent 6,984,234 B2

Before PATRICK R. SCANLON, MICHAEL L. WOODS, and ERIC C. JESCHKE, *Administrative Patent Judges*.

JESCHKE, *Administrative Patent Judge*.

JUDGMENT
Final Written Decision
Determining No Challenged Claims Unpatentable
35 U.S.C. § 318(a)
Dismissing Petitioner's Motion to Exclude
37 C.F.R. § 42.64

I. BACKGROUND

Medacta USA, Inc., Precision Spine, Inc., and Life Spine, Inc. (collectively, "Petitioner") challenge claims 35, 37, and 39 (the "challenged claims") of U.S. Patent No. 6,984,234 B2 (Ex. 1001, "the '234 patent"), which is assigned to RSB Spine, LLC ("Patent Owner"). We have jurisdiction under 35 U.S.C. § 6, and we issue this Final Written Decision under 35 U.S.C. § 318(a) and 37 C.F.R. § 42.73. For the reasons below, we conclude that Petitioner has *not* proven, by a preponderance of the evidence, the unpatentability of *any* of the challenged claims.

A. Procedural History

Petitioner filed a Petition seeking *inter partes* review of the challenged claims. Paper 2 ("Pet."). Patent Owner filed a Preliminary Response. Paper 14. We instituted a trial as to all challenged claims. Paper 24 ("Decision on Institution" or "Dec. Inst.").

During the trial, Patent Owner filed a Response (Paper 27, "PO Resp."), Petitioner filed a Reply (Paper 31, "Pet. Reply"), and Patent Owner filed a Sur-reply (Paper 34, "PO Sur-reply"). Petitioner filed a motion to exclude evidence (Paper 39; *see also* Paper 41 (Petitioner's reply brief)), which Patent Owner opposed (Paper 40).

Petitioner relies on the declaration testimony of Mr. Michael C. Sherman, filed with the Petition (Ex. 1005[1], "Sherman Pet. Decl.") and the Reply (Ex. 1023, "Sherman Reply Decl."). Patent Owner relies on the declaration testimony of Mr. Troy D. Drewry, filed with the Response. Ex. 2006 ("Drewry Decl."). A consolidated oral argument in this

[1] We refer to the "corrected" version of Exhibit 1005, filed on December 14, 2019.

proceeding and two related proceedings (IPR2020-00264 and IPR2020-00274) was held on February 23, 2021, and a copy of the transcript of that argument was entered into the record. Paper 46 ("Tr.").

B. Related Proceedings

The parties identify five proceedings in the U.S. District Court for the District of Delaware involving the '234 patent: (1) *RSB Spine, LLC v. Life Spine, Inc.*, No. 18-cv-1972 (D. Del.); (2) *RSB Spine, LLC v. Medacta USA, Inc.*, No. 18-cv-1973 (D. Del.); (3) *RSB Spine, LLC v. Precision Spine, Inc.*, No. 18-cv-1974 (D. Del.); (4) *RSB Spine, LLC v. Xtant Medical Holdings, Inc.*, No. 18-cv-1976 (D. Del.); and (5) *RSB Spine, LLC v. DePuy Synthes, Inc.*, No. 19-cv-1515 (D. Del.) (collectively, the "Delaware Litigations"). Pet. 1–2; Paper 5 (Patent Owner's Mandatory Notices) at 2.[2] The Delaware Litigations also involve U.S. Patent No. 9,713,537 B2 (Ex. 1002, "the '537 patent"). Pet. 1.

On the same day as the filing of the Petition in this Proceeding (December 13, 2019), Petitioner filed a petition for *inter partes* review of claims 1–10, 13, 14, 16, 18–20, 22, 24, 25, 28, 29, 31, and 32 of the '234 patent in IPR2020-00274. *Medacta USA, Inc. v. RSB Spine, LLC*, IPR2020-00274, Paper 4 (PTAB Dec. 13, 2019) (Petition) ("-00274 Pet."). We granted institution in that proceeding. *See* IPR2020-00274, Paper 22 (PTAB May 22, 2020) (Decision on Institution).

---

[2] Petitioner also includes *RSB Spine, LLC v. RTI Surgical, Inc.*, No. 18-cv-1975 (D. Del.) in its list of "pending litigations." Pet. 1–2. Patent Owner does not list this litigation (Paper 5 at 2), which appears to have been voluntarily dismissed on April 11, 2019 (*RSB Spine, LLC v. RTI Surgical, Inc.*, No. 18-cv-1975 (D. Del. April 11, 2019), ECF No. 12).

On December 13, 2019, Petitioner also filed petitions for *inter partes* review of claims 1, 3–6, 10, 13–15, 18, 19, 21, 22, 24, 29, and 30 of the ’537 patent, in both IPR2020-00264 and IPR2020-00275. *Medacta USA, Inc. v. RSB Spine, LLC*, IPR2020-00264, Paper 2 (PTAB Dec. 13, 2019) (Petition); *Medacta USA, Inc. v. RSB Spine, LLC*, IPR2020-00275, Paper 4 (PTAB Dec. 13, 2019) (Petition). We granted institution in IPR2020-00264, but denied institution in IPR2020-00275. *See* IPR2020-00264, Paper 24 (PTAB May 22, 2020) (Decision on Institution); IPR2020-00275, Paper 22 (PTAB May 22, 2020) (Decision on Institution).

The parties also identify “related” U.S. Patent Application No. 15/723,522 as currently pending before the U.S. Patent and Trademark Office. Pet. 2; Paper 5 at 2.

C. The ’234 Patent

The ’234 patent “is directed to a bone plate system that is particularly useful for assisting with the surgical arthrodesis (fusion) of two bones together, and more particularly, to a bone plate that provides and controls limited movement between the bones during fusion.” Ex. 1001, 1:6–10. In the “Background” section, the ’234 patent discloses that “[t]he stabilization of the vertebra to allow fusion is often assisted by a surgically implanted device to hold the vertebral bodies in proper alignment and allow the bone to heal, much like placing a cast on a fractured bone.” *Id.* at 1:47–51.

Figure 1 is reproduced below:

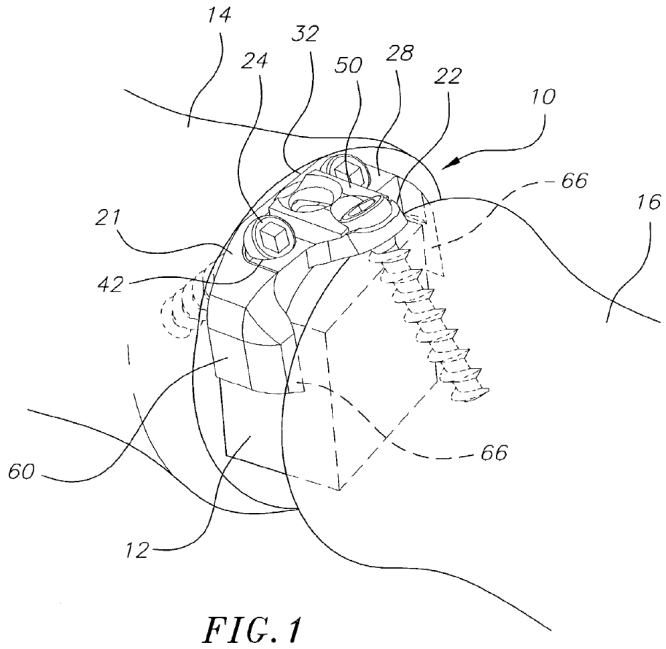

FIG. 1

Figure 1 "is a perspective view of a bone stabilization plate system according to the invention that is assembled between adjacent vertebrae." Ex. 1001, 3:46–48. Specifically, Figure 1 depicts bone stabilization plate system 10, "compris[ing] a base plate 20 [(unnumbered)] having first and second ends, and including a primary member 21 and a secondary member 22 at the second end of the base plate." *Id.* at 4:3–6.[3] Describing Figure 1 (as well as Figure 3 below), the '234 patent discloses that "base plate 20 [is] mounted to first and second adjacent vertebral bodies 14 and 16 with a bone graft 12 between the vertebral bodies" and that "base plate 20 has a bottom surface 26 that contacts the bone graft 12." *Id.* at 4:16–19.

[3] Throughout this Decision, we omit any bolding of reference numerals or claim numbers in quotations from the '234 patent and from prior art references.

Figure 3 is reproduced below:

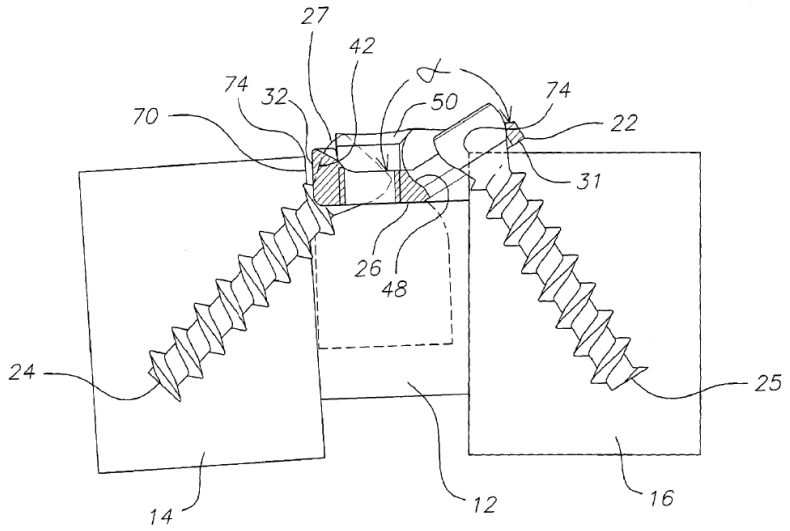

FIG. 3

Figure 3 "is a side cross-sectional view of the bone stabilization plate system of [Figure 1] assembled between adjacent vertebrae." Ex. 1001, 3:51–53. In the embodiment depicted in these Figures, primary member 21 includes two "first bone screw holes 42 extending therethrough for receiving a corresponding number of first bone screws 24," each of which "extends into the first vertebral body 14 at an angle." *Id.* at 4:45–48, 4:55–57. In addition, secondary member 22 includes one "bone screw hole in the form of an elongated bone screw slot 48 for receiving a second bone screw 25," shown extended into "second vertebral body 16." *Id.* at 4:63–67.

In the embodiment depicted above, "base plate 20 further includes a pair of lateral tabs 60 integrally formed with the primary member 21 and extending outwardly from opposite ends of the bottom surface 26 of the primary member to form, together with the primary member, a unitary substantially U-shaped structure." Ex. 1001, 6:33–38. The '234 patent discloses that, "[i]n use, the lateral tabs 60 extend around the bone graft 12

to prevent lateral shift of the graft and control subsidence of adjacent vertebrae as they set during healing." *Id.* at 6:38–41.

D. Illustrative Claim

Petitioner challenges claims 35, 37, and 39, of which only claim 35 is independent. Claims 37 and 39 each depend directly from claim 35. Claim 35 is reproduced below, reformatted from the version in the '234 patent:

> 35. A bone stabilization plate system including
>
> a base plate for retaining bone graft material between first and second longitudinally-aligned, adjacent bone bodies and for permitting force transmission between the first and second bone bodies through the bone graft material, the base plate being sized to have an inter-fit between the first and second adjacent bone bodies and adjacent to lateral extents of the bone graft material such that the first and second bone bodies engage the bone graft material, and
>
> at least first and second bone screws for extending into the first and second bone bodies, respectively, to retain the base plate between the first and second bone bodies,
>
> the base plate having means for interacting with the first and second bone screws, the means for interacting including means for permitting movement of at least one of the first and second bone bodies relative to the base plate.

Ex. 1001, 12:10–25.

E. Instituted Grounds of Unpatentability

We instituted *inter partes* review of the challenged claims based on the following grounds of unpatentability asserted by Petitioner:

Claim(s) Challenged	35 U.S.C. §	Reference(s)/Basis
35, 37, 39	103(a)	Michelson[4]
35, 37, 39	103(a)	Fraser '106[5], Michelson

II. DISCUSSION

A. The Level of Ordinary Skill in the Art

The level of ordinary skill in the art is "a prism or lens" through which we view the prior art and the claimed invention. *Okajima v. Bourdeau*, 261 F.3d 1350, 1355 (Fed. Cir. 2001). The person of ordinary skill in the art is a hypothetical person presumed to have known the relevant art at the time of the invention. *In re GPAC Inc.*, 57 F.3d 1573, 1579 (Fed. Cir. 1995). In determining the level of ordinary skill in the art, we may consider certain factors, including the "type of problems encountered in the art; prior art solutions to those problems; rapidity with which innovations are made; sophistication of the technology; and educational level of active workers in the field." *Id.* (internal quotation marks and citation omitted).

Petitioner contends that a person having ordinary skill in the art "at the time of the alleged invention would have had at least a Bachelor of Science degree in the field of Mechanical, Biomechanical or Biomedical engineering with at least 5 years of experience designing and developing orthopedic implants and/or spinal interbody devices." Pet. 13–14.[6]

---

[4] WO 00/66045, published Nov. 9, 2000 (Ex. 1006, "Michelson").

[5] US 6,432,106 B1, issued Aug. 13, 2002 (Ex. 1007, "Fraser '106").

[6] In IPR2020-00274, Petitioner stated the same level of ordinary skill in the art, except included "at least 5–10 years of experience" rather than, as

In the Decision on Institution, we adopted Petitioner's proposed level of ordinary skill in the art, stating that it "appear[ed] consistent with the record at th[at] stage of the proceeding, including the prior art." Dec. Inst. 11. Patent Owner now proposes a different level, stating, "[a] person of ordinary skill in the relevant art as of April 2003 would be a biomedical engineer with a bachelor's degree in mechanical engineering or biomedical engineering and two or more years of experience in biomechanical engineering, biomedical engineering, and/or spinal implant devices." PO Resp. 7 (citing Drewry Decl. ¶¶ 9–10). According to Patent Owner,

> [a] person could also have qualified as a person of ordinary skill in the art with some combination of (1) more formal education (such as an M.D. in addition to a bachelor's degree in mechanical engineering) and less technical experience or (2) less formal education and more technical or professional experience in the fields listed above.

PO Resp. 7–8 (citing Drewry Decl. ¶¶ 9–10). The parties did not further address this issue at trial. *See generally* Pet. Reply; PO Sur-reply.

Although the level of ordinary skill in the art proposed by Patent Owner (and applied by Mr. Drewry (*see, e.g.*, Drewry Decl. ¶¶ 8–11)) differs slightly from the level adopted in the Decision on Institution, Patent Owner stated, at the oral argument, that the differences are not "material" and that Patent Owner's and Mr. Drewry's positions would be the same under either level. *See* Tr. 56:17–57:4.

Because we agree that the differences in the two levels are immaterial, in the analysis below, we continue to apply the level of ordinary skill in the

---

here, "at least 5 years of experience." *See* -00274 Pet. 14–15; Pet. 13–14. We view these proposed levels of skill as the same in scope.

art adopted in the Decision on Institution. Moreover, the analysis would be the same under Patent Owner's proposed level.

B. Claim Construction

1. Overview

In *inter partes* reviews, the Board interprets claim language using the same claim construction standard that would be used in a civil action under 35 U.S.C. § 282(b), as described in *Phillips v. AWH Corp.*, 415 F.3d 1303 (Fed. Cir. 2005) (en banc). *See* 37 C.F.R. § 42.100(b) (2019). Under that standard, we generally give claim terms their ordinary and customary meaning, as would be understood by a person of ordinary skill in the art at the time of the invention, in light of the language of the claims, the specification, and the prosecution history. *See Phillips*, 415 F.3d at 1313–14. Although extrinsic evidence, when available, may also be useful when construing claim terms under this standard, extrinsic evidence should be considered in the context of the intrinsic evidence. *See id.* at 1317–19.

Petitioner proposes constructions for the following terms: (1) "base plate"; (2) "lip osteophyte"; (3) "means for interacting"; and (4) "means for permitting movement." Pet. 14–20. In the claim construction section of its Response, Patent Owner addresses only the term "base plate." PO Resp. 8–13; *see also id.* at 8 (stating that Patent Owner "addresses the constructions of other terms, as proposed by Petitioner[] or preliminarily adopted by the Board, as necessary, in the sections that follow").

Based on the full record developed at trial, we construe only the term "base plate." We do not discern a need to construe explicitly any of the other claim language discussed in this section or any other claim terms because doing so would have no effect on the analysis below. *See Nidec*

Motor Corp. v. Zhongshan Broad Ocean Motor Co., 868 F.3d 1013, 1017 (Fed. Cir. 2017) (stating that "we need only construe terms 'that are in controversy, and only to the extent necessary to resolve the controversy'" (quoting *Vivid Techs., Inc. v. Am. Sci. & Eng'g, Inc.*, 200 F.3d 795, 803 (Fed. Cir. 1999))).

2. "Base Plate"

Petitioner originally proposed that "base plate" be construed as "[a] fixation plate to stabilize adjacent vertebrae for fusion, which is distinct from bone graft material deployed across a bone graft site and **is not used with a load-bearing fusion cage**." Pet. 15. This proposed construction included a negative limitation—not in Patent Owner's proposed construction (and shown with Petitioner's emphasis above)—requiring that the "base plate" not be "used with a load-bearing fusion cage." *Id.* Patent Owner, on the other hand, proposes that "base plate" be construed as "a fixation plate of a bone plate stabilization system to stabilize adjacent vertebrae for fusion and **distinct from a spacer** and bone graft material deployed across a bone graft site." PO Resp. 8 (emphasis added). This proposed construction includes an additional limitation—not included in Petitioner's originally proposed construction (and shown with our emphasis above)—requiring that the "base plate" is "distinct from a spacer." *Id.*

In the Decision on Institution, we preliminarily construed "base plate" as a "fixation plate to stabilize adjacent vertebrae for fusion." Dec. Inst. 12–22. The preliminary construction comprises language common to both Petitioner's and Patent Owner's currently proposed constructions. *See id.* at 21; Pet. Reply 18 (citing Sherman Reply Decl. ¶¶ 68–73); PO Resp. 8. Below, we address (1) the negative limitation proposed as part of

Petitioner's originally proposed construction ("not used with a load-bearing fusion cage"), (2) the additional limitation proposed as part of Patent Owner's currently proposed construction ("distinct from a spacer"), (3) a requirement, included in both Petitioner's originally proposed and Patent Owner's currently proposed constructions (that a "base plate" is "distinct from" "bone graft material deployed across a bone graft site"), and (4) an additional requirement, included in Patent Owner's proposed construction (that the "base plate" is part "of a bone plate stabilization system").

a. "not used with a load-bearing fusion cage"

As discussed above, Petitioner originally proposed a requirement that a "base plate" "is not used with a load-bearing fusion cage." Pet. 15 (emphasis omitted). For the reasons in the Decision on Institution, we did not include that requirement in the preliminary construction. *See* Dec. Inst. 13–16. In the Reply, Petitioner does not continue to assert this requirement and instead revises its proposed construction in line with the preliminary construction of "base plate" (at least for purposes of this proceeding (Tr. 7:21–8:7)). *See* Pet. Reply 18 (arguing that the Board should "construe base plate as 'fixation plate to stabilize adjacent vertebrae for fusion'" (citing Sherman Reply Decl. ¶¶ 68–73)). Based on the complete record, and for the reasons in the Decision on Institution, which we adopt here, we do not include the negative limitation ("is not used with a load-bearing fusion cage") in the construction of "base plate."

b. "distinct from a spacer"

Patent Owner provides several arguments as to why the proposed requirement that a "base plate" is "distinct from a spacer" is allegedly in accordance with the "plain and ordinary meaning" and supported by the

intrinsic and extrinsic evidence. PO Resp. 9–12 (emphasis omitted). As an initial matter, we question the need to directly address this proposed requirement in that, even under the construction of "base plate" applied below—which *does not* include this requirement—we determine that Petitioner has *not* prevailed in showing that two of the three relied-upon embodiments include a "base plate." *See infra* §§ II.C.2.a, II.D.2.a.1. Regardless, to provide a full discussion of the issues, we address this proposed requirement.

First, Patent Owner highlights aspects of both the '234 patent at issue in this proceeding and the related '537 patent. *See* PO Resp. 9–11. As background, the '537 patent relates to the '234 patent via five generations of continuation-in-part applications. *See* Ex. 1002, code (63). The '537 patent shares Figures 1–7 with the '234 patent, but adds Figures 8 through 44. In addition, the '537 patent shares aspects of its written description with the '234 patent, but the '537 patent adds over twenty columns of additional disclosures. *Compare* Ex. 1001, *with* Ex. 1002.

In support of the proposed "distinct from a spacer" requirement, Patent Owner argues that the '234 patent "discloses a spacer (bone graft 12) that is separate from the base plate (20)." PO Resp. 10 (citing Ex. 1001, 4:16–22, 6:47–50, Figs. 1–3; Drewry Decl. ¶ 43). As to the '537 patent, Patent Owner argues that, "[i]n embodiments depicted in Figures 35–38, a primary member (*i.e.*, a base plate) is separate from a 'detachable chamber member 696' (*i.e.*, a spacer) to be packed with fusion material." *Id.* at 11 (citing Ex. 1002, Figs. 35–38; Drewry Decl. ¶ 43).

Petitioner responds that the '234 patent "directly contradicts" this proposed requirement and that the '537 patent does not support it. Pet. 16;

see Pet. 16–18; Pet. Reply 6–18. Specifically, Petitioner argues that "[t]he entire disclosure of the '234 patent is directed to a base plate 20 . . . that includes an integrated spacer 60."[7] Pet. 16–17. Petitioner highlights testimony of Patent Owner's declarant, Mr. Drewry, who testified that, "if there becomes a loss of disc height or one vertebral body moves down towards the other, [lateral tabs] 60 and [nubs] 66 may come into contact and provide a spacer or subsidence control, as it states in the patent, at that point." Ex. 1024, 89:23–90:4, *quoted at* Pet. Reply 8. As to the '537 patent, Petitioner contends that the additional disclosures only present in the '537 patent cannot be used to "change" the meaning of "base plate." *See* Pet. Reply 9–18. Petitioner notes that the additional disclosures do not refer to a "base plate." *See id.* at 11–12.

We are not persuaded by Patent Owner's arguments based on the '234 and '537 patents. As to the '234 patent, we note that although it shows base plate 20 as distinct from bone graft 12, nowhere is bone graft 12 referred to as a "spacer." *See, e.g.*, Ex. 1001, 4:16–22, 6:47–50, *cited at* PO Resp. 10. In fact, the term "spacer" is not used *anywhere* in the '234 patent (or the '537 patent). In cited paragraph 43 of Mr. Drewry's Declaration, he relies on Exhibit 2022, which provides an example of "spacers composed of bone graft compositions." Ex. 2022, 4:66–5:1, *quoted at* Drewry Decl. ¶ 43. Even considering this exemplary disclosure in Exhibit 2022, however, we

[7] The '234 patent identifies element 60 as "lateral tabs," not as "integrated spacers." *See, e.g.*, Ex. 1001, 6:33–38.

are not persuaded that the disclosure in the ’234 patent as to bone graft material defines the term “base plate” as distinct from all spacers.[8]

We are also not persuaded by Patent Owner’s arguments based on the ’537 patent. First, the discussion of the embodiments in Figures 35–38 highlighted by Patent Owner expressly refers to a “primary member,” not a “base plate” as recited in the claim language at issue. *See, e.g.*, Ex. 1002, 34:50–36:8 (discussing Figures 35–38); Pet. Reply 11 (“Even if the Board considers the new matter in the ’537 patent, none of it refers to a ‘base plate.’ The descriptions of other structures do not change the meaning of the term base plate.”). Patent Owner does not persuasively explain why disclosed “primary member 600” in Figures 35–38 would have been considered a “base plate” as recited in the claim language at issue, especially given that *other* disclosures in the ’537 patent use the precise term at issue—i.e., “base plate.” *See, e.g.*, Ex. 1002, 8:31–60 (discussing “base plate 20” shown in Figure 1, common to both the ’234 patent and ’537 patent). In an effort to show the alleged connection between “primary member 600” and “base plate,” Patent Owner references language that seems to distinguish the “unitary implant structure” in Figure 34 from embodiments such as those in Figures 35–38; but even that discussion uses the term “plate” rather than “base plate.” *See* Ex. 1002, 34:39–44, *quoted at* PO Resp. 11. Mr. Drewry presents the same statement purportedly linking “primary member” and “base plate” but does not explain his position. *See* Drewry Decl. ¶ 43 (also stating that “the embodiments depicted in Figures 35–38 show a primary

[8] As discussed below (*see* § II.B.2.c), we also reject Patent Owner’s related proposed requirement that a “base plate” must be “distinct from” “bone graft material deployed across a bone graft site.”

member (*i.e.*, a base plate)"); 37 C.F.R. § 42.65(a) ("Expert testimony that does not disclose the underlying facts or data on which the opinion is based is entitled to little or no weight.").

Second, given that the parties agree that "base plate" should be construed the same in the '234 patent and the '537 patent, we question whether the additional disclosures of the '537 patent should be considered for claim construction purposes. *See Sinorgchem Co., Shandong v. Int'l Trade Comm'n*, 511 F.3d 1132, 1139 n.5 (Fed. Cir. 2007) ("All parties agreed before the ITC that the disputed term 'controlled amount' must be construed to mean the same thing in the claims of the [patent issuing via CIP] as in the [parent] patent. Additional examples included in the specification of the continuation-in-part application that led to the [patent issuing via CIP] cannot alter the meaning of the term as it appears in the [parent] patent.")[9]; *see also* Pet. Reply 9 (arguing that "base plate" "must be interpreted consistently in both patents"); PO Sur-reply 9 ("PO's construction interprets the 'base plate' term consistently across both patents and thus does not run afoul of the principle articulated in *SightSound Tech[nologies], LLC v. Apple, Inc.*, 809 F.3d 1307, 1316 (Fed. Cir. 2015).").

---

[9] Patent Owner cites footnote 5 in *Sinorgchem* for the proposition that "[n]ew subject matter in the child CIP patent may be used to construe claim terms shared between the child CIP and parent patents, provided the disclosures do not broaden the scope of the claim terms within the parent patent." PO Resp. 10 n.2. Unlike Patent Owner, we read the footnote as precluding the use of additional disclosures in a patent such as the '537 patent, regardless of whether those disclosures are used to "broaden" the scope of the claim term at issue. *Id.*

We turn now to Petitioner's request—presented in response to Patent Owner's "distinct from a spacer" requirement—that we "confirm that an integrated spacer is within the scope of [the] construction of a base plate." Pet. Reply 9 (citing Sherman Reply Decl. ¶¶ 53–56). On the full record developed at trial, we decline Petitioner's request. Even assuming that, as argued, lateral tabs 60 in the '234 patent are *one type* of "integrated spacer"[10]—i.e., because they are integrally formed with and part of the "base plate"[11] and can, in certain configurations, bear at least some vertebral weight[12]—the record does not support Petitioner's open-ended request that we construe "base plate" to include *all* "integrated spacers."

---

[10] *See* IPR2020-00264, Paper 24 at 28–29 ("Because the evidence of record fails to support Patent Owner's position that the claimed 'base plate' must be 'distinct from a spacer,' and *because Patent Owner's own 'base plate' appears to be a 'spacer,'* we decline to adopt Patent Owner's proposed requirement." (emphasis added)).

[11] For example, the '234 patent discloses that "[i]n the depicted embodiment, the base plate 20 *further includes* a pair of lateral tabs 60 integrally formed with the primary member 21 and extending outwardly from opposite ends of the bottom surface 26 of the primary member to form, together with the primary member, a unitary substantially U-shaped structure." Ex. 1001, 6:33–38 (emphasis added).

[12] For example, the '234 patent discloses that "[i]f the base plate 20 includes lateral tabs 60 with nubs 66, the nubs will also share in the weight-bearing during settling of the vertebral bodies. Specifically, as the vertebral bodies move toward each other during settling, the pointed nubs 66 will contact and slowly enter the second vertebral body 16 to a limited extent." Ex. 1001, 7:55–60.

Here, dependent claims 37 and 38 in the '234 patent expressly recite "lateral tabs" as part of the "base plate"[13] (*see* Ex. 1001, 12:32–41), but *no claim* uses "integrated spacers" or even "spacer" more generally. The written description also does not use the term "spacer" or indicate that "base plate" includes *all* "integrated spacers." By declining Petitioner's request, we do not exclude a preferred embodiment as seemingly argued (*see* Pet. Reply 9); instead, we refrain from expanding the disclosures in the '234 patent from a potential example of "integrated spacer" (i.e., the "lateral tabs") to a broader category (i.e., all "integrated spacers") not mentioned.

Second, having discussed the intrinsic evidence presented by Patent Owner in support of this proposed requirement, we turn now to extrinsic evidence, specifically, the testimony of the declarants.[14] *See Phillips*, 415 F.3d at 1317 (discussing expert testimony as a form of extrinsic evidence on claim construction). Patent Owner cites Mr. Drewry's testimony to contend that this proposed requirement "makes clear that base plates and spacers are two different devices and while they might be used in conjunction with one another, they are in fact distinct." PO Resp. 9 (citing Drewry Decl. ¶¶ 40–42). According to Patent Owner, "[a] spacer is configured to maintain disc space across the bone graft site and bear weight from the vertebral bodies in the spinal column to promote fusion of the bone graft material, but not so much weight as to cause structural collapse," whereas "base plates" "are

---

[13] Dependent claims 20, 21, 32, and 33 more generally recite "tabs" as part of the "base plate." *See* Ex. 1001, 10:28–36, 11:33–40.

[14] Patent Owner relies upon various dictionary definitions of the term "plate" (*see, e.g.*, PO Resp. 19 (citing Exs. 2007–2010)) but discusses them in the context of *applying* the construction. We do the same, and discuss that extrinsic evidence below. *See infra* §§ II.C.2.a, II.D.2.a.1.

fixation plates that are used to stabilize adjacent bones for fusion, which may or may not be inserted between vertebral bones." *Id.* at 9–10 (citing Drewry Decl. ¶ 40).

We are not persuaded by Patent Owner's argument. Mr. Drewry cites several exhibits but we do not find adequate evidence (in the exhibits or the testimony) to support the assertion that a skilled artisan would understand that a "base plate" *must* be distinct from a "spacer." As an initial matter, *none* of the exhibits actually use the term at issue—"base plate." Specifically, Exhibits 2001, 2002, and 2022 appear to describe examples of plates *that are* separate from spacers (*see, e.g.*, Ex. 2002, Figs. 7, 8, *cited at* Drewry Decl. ¶ 40), yet none of these documents defines "base plate" or establishes that one of ordinary skill in the art would have understood that a "base plate" must be distinct from a "spacer," as argued by Patent Owner.

As to paragraphs 41 and 42 from Mr. Drewry's Declaration (relying on Exhibit 2023[15]), we first note that they are cited only once by Patent Owner in a statement not mentioning the substance of the testimony. *See* PO Resp. 9 ("The construction makes clear that base plates and spacers are two different devices and while they might be used in conjunction with one another, they are in fact distinct. [Drewry Decl.] ¶¶40-42."); 37 C.F.R. § 42.6(a)(3) ("Arguments must not be incorporated by reference from one document into another document."); *Cisco Sys., Inc. v. C-Cation Techs., LLC*, IPR2014-00454, Paper 12 at 8–10 (PTAB Aug. 29, 2014) (informative) (discussing improper incorporation by reference of declarant testimony). Moreover, we are not persuaded that the referenced product

[15] Exhibit 2023 is an excerpt from the November/December 2007 issue of "SpineLine" from the North American Spine Society.

coding guidelines from the North American Spine Society adequately support the specific proposed requirement as to "base plate"—a term not mentioned in the exhibit at all. *See generally* Ex. 2023. Based on the complete record, and for the reasons here and in the Decision on Institution, we do not include a requirement that a "base plate" is distinct from a spacer.

c. "distinct from" "bone graft material deployed across a bone graft site"

Petitioner originally proposed and Patent Owner currently proposes a common requirement: that a "base plate" is "distinct from" "bone graft material deployed across a bone graft site." Pet. 15; PO Resp. 8. For the reasons explained in the Decision on Institution, we did not include that requirement in the preliminary construction. *See* Dec. Inst. 17–19. In the Reply, Petitioner does not continue to assert this requirement and instead revises its proposed construction in line with the preliminary construction of "base plate" (at least for purposes of this proceeding (Tr. 7:21–8:7)). *See* Pet. Reply 18.

Patent Owner continues to propose this requirement. *See* PO Resp. 8. Although Patent Owner explains an alleged distinction between a "spacer" (which allegedly could be made of bone graft material) and a "base plate," Patent Owner does not adequately present argument or evidence in support of the alleged distinction between a "base plate" and "bone graft material deployed across a bone graft site." *Id.* at 9–12 (discussing how "Patent Owner's construction recognizes that a base plate is distinct from a 'spacer'" and arguing in support of that requirement); *see generally* PO Sur-reply (not addressing claim construction issues); *see also* Dec. Inst. 18 (stating that "neither Petitioner nor Patent Owner provides argument or identifies evidence to support" this asserted requirement). Moreover, Patent Owner

does not present any arguments that rely on the presence of this proposed requirement in the construction of "base plate." *See* PO Resp. 14–77; PO Sur-reply 2–28; Dec. Inst. 19 n.11. Based on the complete record, and for the reasons explained here and in the Decision on Institution, we do not include a requirement that a "base plate" is distinct from bone graft material deployed across a bone graft site.

d. "of a bone plate stabilization system"

Finally, Patent Owner includes as part of its proposed construction that a "base plate" is part "of a bone plate stabilization system." PO Resp. 8. For the reasons explained in the Decision on Institution, we did not include that requirement in the preliminary construction. *See* Dec. Inst. 19–21.

Patent Owner does not adequately present argument or evidence in support of this alleged requirement. *See* PO Resp. 9–12 (discussing only the proposed requirement that a "base plate" is "distinct from a spacer"); *see generally* PO Sur-reply (not addressing claim construction issues). Moreover, Patent Owner does not present any arguments that rely on the presence of this alleged requirement in the construction of "base plate." *See* PO Resp. 14–77; PO Sur-reply 2–28; Dec. Inst. 21 n.12. Based on the complete record, and for the reasons explained here and in the Decision on Institution, we do not include a requirement that the "base plate" is part of a bone plate stabilization system.

e. Construction of "Base Plate"

For the reasons above and based on the complete record, we maintain the construction of "base plate" as a "fixation plate to stabilize adjacent vertebrae for fusion."

C. Asserted Obviousness of Claims 35, 37, and 39 Based on Michelson

Petitioner asserts that claims 35, 37, and 39 of the ’234 patent are unpatentable under 35 U.S.C. § 103(a) based on Michelson. Pet. 4, 21–60; Pet. Reply 20–22. Patent Owner provides arguments addressing this asserted ground of unpatentability. PO Resp. 14–41; PO Sur-reply 2–12. We summarize aspects of Michelson and then address the arguments.

1. Michelson

According to Michelson, certain spinal instabilities can be treated by fusion, which is “the joining together permanently of the unstable vertebrae via a bridge of bone so as to eliminate all motion along [a] portion of the spine.” Ex. 1006 at 2.[16] Michelson discloses various “interbody spinal fusion implants” that are “placed at least in part within a disc space and in contact with each of the vertebral bodies adjacent that disc space for spacing apart and aligning those vertebral bodies and for allowing for the growth of bone in continuity from vertebral body to adjacent vertebral body.” *Id.* Michelson provides this summary of the process:

> In order to perform anterior interbody spinal fusion, a significant amount of disc material is removed from the interspace to be fused. After removing the disc material, the disc space is filled with an implant, which generally includes bone or bone in combination with a reinforcing structure, such as an artificial (other than bone) interbody spinal fusion implant.

Ex. 1006 at 3.

[16] Both Petitioner and Patent Owner refer to Michelson using the internal pagination rather than the page numbers added by Petitioner (e.g., “Petitioners 1006-1” on the first page). For consistency, we do the same.

Figures 24 and 25 of Michelson are reproduced below:

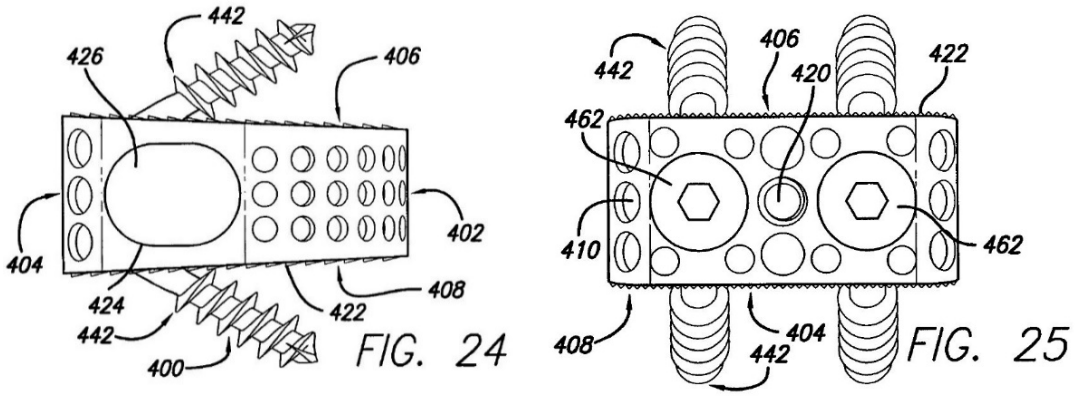

Figure 24 is "a side elevation view of the fourth embodiment implant with opposed bone engaging screws." Ex. 1006 at 7; *see also* Pet. 22 (stating that "[t]his ground relies on Michelson['s] fourth embodiment, namely implant 400"). Figure 25 is "a trailing end view of the implant of Figure 24 with screws and screw locks in place." Ex. 1006 at 7. Michelson describes implant 400 as including convex leading end 402 and opposite trailing end 404, both of which are "highly perforate to allow for vascular access to hollow interior 426 of implant 400, and to allow for the growth of bone therethrough." *Id.* at 16. Implant 400 also includes opposed upper and lower vertebral body engaging surfaces 406 and 408, respectively, and bone screws 442. *Id.* at 16–17. Figure 25 also depicts "threaded lock members 462, preventing screws 442 from backing out." *Id.* at 17.

Figures 23 and 21 are reproduced below:

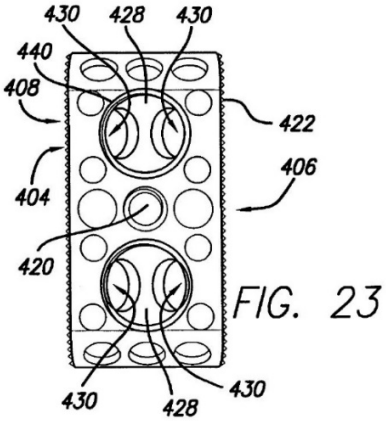

FIG. 23

FIG. 21

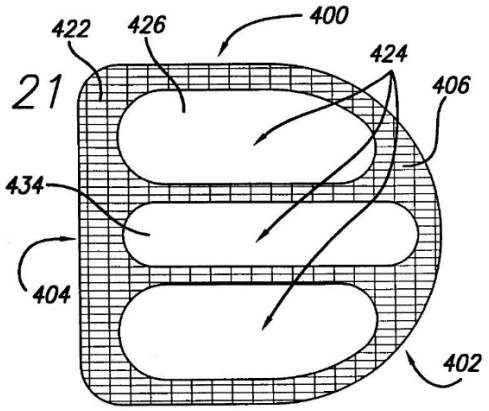

Figure 23 is a "trailing end view" and Figure 21 is a "top plan view" of the same embodiment shown in Figures 24 and 25 above. Ex. 1006 at 6. Figure 23 shows two common holes 440 (which receive threaded lock members 462 shown in Figure 25) as well as four holes 430, each of which is "adapted to receive a bone screw 442" that is directed "into [a] vertebral body itself at an angle preferably between 25° and 75°." *Id.* at 17. As shown in Figure 21, Michelson discloses that "[i]mplant upper and lower surfaces 406 and 408 have large windows or slots 424 therethrough, each in communication with the central hollow chamber 426 of the implant and each forming a direct path to its counterpart on the opposite surface through implant 400." *Id.* at 16–17. Michelson also discloses that "[t]o the extent that such implants are hollow and have openings through the surfaces, those openings and those hollows can preferably be filled with fusion promoting substances, including substances that are osteogenic, osteo-inductive, or osteo-conductive, whether naturally occurring, or artificially produced." *Id.* at 9.

2. Analysis

a. Independent Claim 35

Petitioner contends that Michelson, as modified, satisfies each of the limitations of claim 35. Pet. 25–42. To support its arguments, Petitioner identifies certain passages in the cited references and explains the significance of each passage with respect to the corresponding claim limitation. *Id.* Below, we discuss the parties' positions with respect to the requirement, in claim 35, for a "base plate." Ex. 1001, 12:10–11. This issue is dispositive as to claim 35.

Petitioner asserts that Michelson discloses a "base plate." Pet. 26–28; Pet. Reply 20–21. Patent Owner disagrees. PO Resp. 14–38; PO Sur-reply 2–11. Addressing this limitation, Petitioner provides the following side-by-side comparison of annotated versions of Figure 4 of the '234 patent and Figure 25 of Michelson:

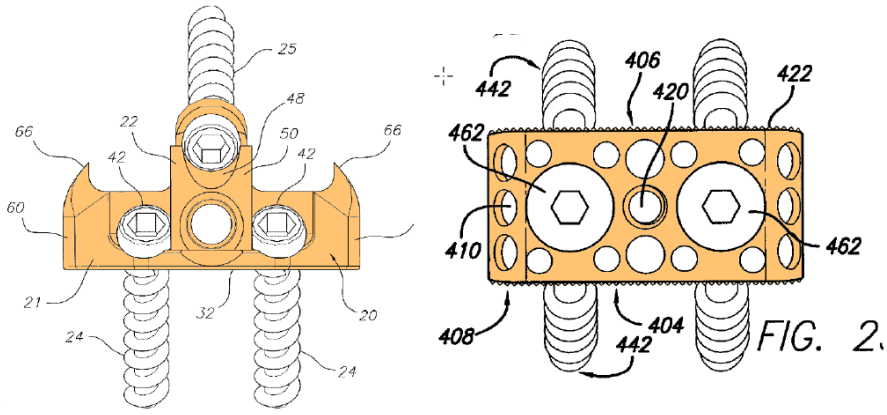

'234 patent, Ex.1001, Fig.4 **Michelson '045, Ex.1006, Fig.25**

Pet. 27. For the annotated version of Figure 4 of the '234 patent, Petitioner added orange overlay to base plate 20, and for the annotated version of Figure 25 of Michelson, Petitioner added orange overlay to implant 400—i.e., all the depicted structure, except bone screws 442 and threaded lock members 462. *Id.* Petitioner states that, "like the '234 patent, Michelson . . .

discloses a fixation plate 404 to stabilize adjacent vertebrae for fusion." *Id.* at 26–27.[17] In the Decision on Institution, we addressed Patent Owner's arguments relating to proposed requirements not adopted in the preliminary construction (or the construction above) and determined that Petitioner had made a sufficient showing, at that stage of the proceeding, that Michelson discloses a "base plate." *See* Dec. Inst. 25–29.

In the Response, Patent Owner argues that "Michelson implant 400 is not a 'base plate'" under the construction above "because it is not a fixation ***plate***." PO Resp. 19. According to Patent Owner, the term "plate" in the construction "does not broadly encompass all structures of any shape or form (*e.g.*, rods, screws, rings, boxes, etc.) or any generic structure (*e.g.*, a fixation 'member,' 'body,' 'implant,' etc.) that could be used to stabilize adjacent vertebrae for fusion." *Id.* (citing Drewry Decl. ¶ 55). Patent Owner presents certain alleged shape-based definitions of "plates": (1) "A 'plate' is characterized in part by its thinness relative to its other dimensions" (*id.* (citing Drewry Decl. ¶¶ 59–60; Ex. 2007–2010 (dictionary definitions of "plate"); Ex. 2012 ¶ 35)) and (2) "Due to its relative thinness, a 'plate' is further characterized as generally having two opposed, 'primary' surfaces—*i.e.*, its top and bottom or front and back surfaces—with relatively large areas in comparison to its connecting side surfaces" and the "opposed, comparatively large primary surfaces of a plate are external or outwardly

[17] As noted in the Decision on Institution, we view Petitioner's use of reference numeral 404 in this statement as a typographical error, and we understand Petitioner to identify implant 400 as the "base plate," as overlaid in orange in the annotated version of Figure 25 of Michelson shown above. *See* Dec. Inst. 26 n.14. Petitioner did not address this issue at trial.

facing (relative to the plate itself)" (*id.* at 20 (citing Drewry Decl. ¶ 62)). Patent Owner then provides the following depiction of an exemplary "plate":

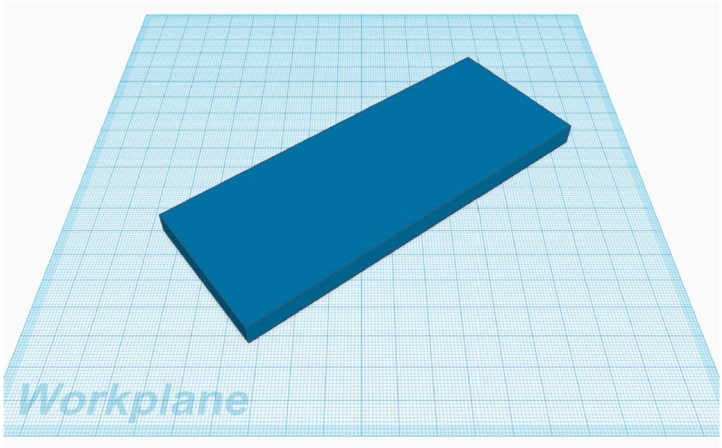

PO Resp. 21. According to Patent Owner, "the depicted plate has two opposed primary surfaces (*i.e.*, the surfaces parallel to the 'Workplane'), which are outwardly facing and relatively large in comparison to its connecting side surfaces (*i.e.*, the surfaces perpendicular to the 'Workplane')." *Id.* (citing Drewry Decl. ¶ 62; Ex. 2017, 77:5–20).

Patent Owner also argues that "plates" can be functionally defined in that they are "often used or configured to cover, reinforce, or protect something else." PO Resp. 22 (citing Drewry Decl. ¶ 66; Exs. 2010–2011 (dictionary definitions of "plate")). According to Patent Owner, implant 400 in Michelson is not a "plate" because it does not possess the identified shape- and function-based definitions. *See id.* at 33 (arguing that implant 400 "is not a plate" as it is "not a relatively thin structure that is characterized by two opposed, outwardly-facing surfaces that are relatively large compared to its connecting side surfaces" (citing Drewry Decl. ¶ 80)), 34 (arguing that implant 400 "cannot be inserted onto the anterior face of a solid bone graft (*e.g.*, bone graft 12 in the '234 patent) or fusion cage that

has been placed between two vertebral bones in order to cover the graft/cage" (citing Drewry Decl. ¶ 81)).

Although structures within the definitions identified by Patent Owner *may* be considered "plates" in a general sense, the particular definitions presented conflict with the "base plate" in the *only depicted embodiment* in the '234 patent. Below, we reproduce an annotated version of Figure 2 of the '234 patent, with the "base plate" shown in orange:

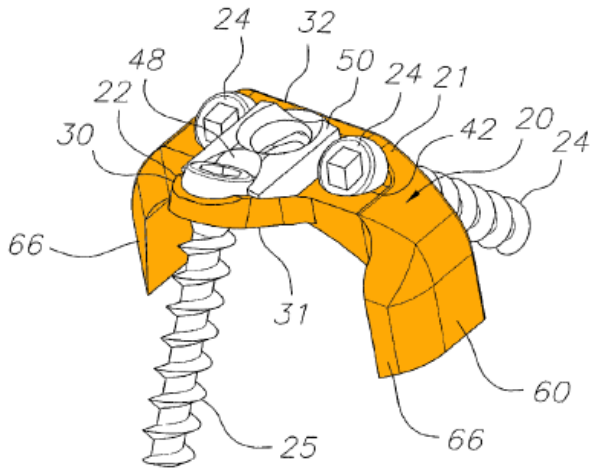

Pet. 17. Figure 2 of the '234 patent provides "a perspective view of the bone stabilization plate system" shown in Figure 1. Ex. 1001, 3:49–50. In the annotated version, base plate 20 is shown overlaid in orange. Pet. 17. The description of this embodiment makes clear that lateral tabs 60 and nubs 66—shown in orange here—are, when present, part of the "base plate." *See* Ex. 1001, 6:33–38. The same description identifies the "base plate" as a "unitary substantially U-shaped structure." *Id.*

Notably, in addressing why the shape-based definitions allegedly align with the description in the '234 patent, Patent Owner discusses certain structural components of the "base plate" but *does not* discuss lateral tabs 60 (which contribute to the U shape of the structure, as shown above). *See* PO

Resp. 23–25. Although the "lateral tabs" are not required to be present in the "base plate," *when present*, they are part of the "base plate" (as shown in the annotated version of Figure 2 above). *Compare* Ex. 1001, 12:10–25 (independent claim 35, reciting a "base plate" but not requiring "lateral tabs"), *with id.* at 12:32–37 (dependent claim 37, adding that "the base plate includes two lateral tabs"). Because Patent Owner's shape-based definitions conflict with the "base plate" shown in the '234 patent, we do not adopt them as part of the construction. *See PPC Broadband, Inc. v. Corning Optical Commc'ns RF, LLC*, 815 F.3d 747, 755 (Fed. Cir. 2016) ("We have often remarked that a construction which excludes the preferred embodiment is rarely, if ever correct. A construction which reads the preferred embodiment out of the scope of the claims would generally seem at odds with the intention of the patentee as expressed in the specification." (internal quotations and citations omitted)).

We are also not persuaded to adopt Patent Owner's function-based definition of a "base plate" as "used or configured to cover, reinforce, or protect something else." PO Resp. 22 (citing Drewry Decl. ¶ 66; Exs. 2010–2011 (dictionary definitions of "plate")). As an initial matter, we hesitate to functionally define a structural claim element. *See Toro Co. v. White Consol. Indus., Inc.*, 266 F.3d 1367, 1371 (Fed. Cir. 2001) ("An invention claimed in purely structural terms generally resists functional limitation." (citing *Ecolab, Inc. v. Envirochem, Inc.*, 264 F.3d 1358, 1367 (Fed. Cir. 2001) ("Where the function is not recited in the claim itself by the patentee, we do not import such a limitation.") (citations omitted))).

Moreover, Patent Owner does not identify intrinsic evidence supporting its position, and we find the intrinsic evidence in conflict with the

presented extrinsic evidence. Here, Patent Owner relies on bone graft 12 as the "something else" being covered or protected in the context of this functional requirement. PO Resp. 34. Although "bone graft material" is expressly recited in independent claim 35 (as well as independent claims 40 and 41), it is *not* recited in independent claims 1 and 22, both of which, however, *do* recite a "base plate." *See* Ex. 1001, 8:62–9:16 (claim 1), 10:38–56 (claim 22). *See InterDigital Commc'ns, LLC v. ITC*, 690 F.3d 1318, 1324 (Fed. Cir. 2012) ("The doctrine of claim differentiation is at its strongest in this type of case, 'where the limitation that is sought to be "read into" an independent claim already appears in a dependent claim.'" (quoting *Liebel-Flarsheim Co. v. Medrad, Inc.*, 358 F.3d 898, 910 (Fed. Cir. 2004)). Thus, because the "base plate" in certain independent claims *need not* cover or protect bone graft material (because it is not required), we do not adopt this proposed functional definition into the construction of a "base plate." For these reasons, we do not adopt Patent Owner's shape- and function-based definitions of "base plate."

We agree, however, with Patent Owner's more general argument that Petitioner has not satisfied its burden to show by a preponderance of the evidence that one of ordinary skill in the art would have understood implant 400 in Michelson as a "base plate"—i.e., a fixation plate to stabilize adjacent vertebrae for fusion. *See* PO Resp. 37. In the only statement in the Petition that addresses the requirements in the construction of "base plate" provided above, Petitioner states that, "like the '234 patent, Michelson . . . discloses a fixation plate 404 to stabilize adjacent vertebrae for fusion." Pet. 26–27.[18]

---

[18] As mentioned above (note 17), Petitioner identifies implant 400—not element 404—as the "base plate."

Although this statement does not rely on any declaration testimony, in the relevant testimony, Mr. Sherman merely presents the same statement as his opinion, without any additional explanation. *See* Sherman Pet. Decl. ¶ 82; 37 C.F.R. § 42.65(a). In the Reply, Petitioner contends that Patent Owner's "arguments for patentability over Michelson require accepting its base plate positions" and then simply states that under the construction above (agreed to by Petitioner) "Michelson renders the claims obvious as explained in the Petition." Pet. Reply 20 (citing PO Resp. 8–37; Pet. 26–28; Sherman Reply Decl. ¶ 78). In the relevant testimony, Mr. Sherman merely presents the same statements without any additional explanation. *See* Sherman Reply Decl. ¶ 81.

As an initial matter, it is not Patent Owner's ultimate burden to demonstrate patentability of the challenged claims. *See Dynamic Drinkware, LLC v. Nat'l Graphics, Inc.*, 800 F.3d 1375, 1378–79 (Fed. Cir. 2015) ("In an *inter partes* review, the burden of persuasion is on the petitioner to prove 'unpatentability by a preponderance of the evidence,' 35 U.S.C. § 316(e), and that burden never shifts to the patentee."); *see also In re Magnum Oil Tools Int'l, Ltd.*, 829 F.3d 1364, 1376 (Fed. Cir. 2016) (discussing how "it is inappropriate to shift the burden to the patentee after institution to prove that the patent is patentable"); Pet Reply 20 (discussing Patent Owner's "arguments for patentability over Michelson").

Further, although (as discussed above) we do not adopt Patent Owner's shape- and function-based definitions as to "base plate," we agree with Patent Owner's more general argument that Petitioner has not satisfied *its burden* to show that one of ordinary skill in the art would have

understood implant 400 in Michelson as a "base plate." *See* PO Resp. 37 ("In their Petition, Petitioners simply identify the Michelson implant 400 as the 'base plate' (*see* Pet. at 26–28), and they do not explain ***why*** this structure purportedly is a 'plate,' under a proper understanding of this term." (citing Drewry Decl. ¶ 84)); *see also* PO Sur-reply 1 (arguing that, in the Reply, Petitioner "ignore[s] that they failed to show that the Michelson implant . . . is a plate and thus fail[s] to show that it is a 'base plate' under the Board's preliminary construction"), 2 ("As discussed in detail in the [Response], [one of ordinary skill in the art] would not have considered the Michelson implant to be a 'base plate' or 'fixation plate' because it is not a plate." (citing PO Resp. 19–38)).

Petitioner bears the burden in this proceeding to explain why implant 400 would have been considered a "base plate" under the construction above, which Petitioner has adopted. *See* Pet. Reply 18, 20; *see also* PO Sur-reply 4 ("Having chosen to adopt the Board's construction of 'base plate,' Petitioner[] w[as] required to show that the Michelson implant 400 is a 'fixation ***plate*** to stabilize adjacent vertebrae for fusion.'"). The parts of the Petition and Reply summarized above are the entirety of Petitioner's argument and evidence addressing whether one of ordinary skill in the art would have understood implant 400 in Michelson as a "base plate." Having considered the argument and evidence presented by Petitioner on this issue in the complete record as developed at trial (as summarized above), we agree with Patent Owner that Petitioner has not satisfied its burden on this issue. *See* PO Sur-reply 5–6 ("In the[] Petition, and now again in the[] Reply, Petitioner[] simply identif[ies] the Michelson implant 400 as the 'base plate,'

and fail[s] to explain ***why*** this device purportedly is a 'fixation ***plate***' under a proper understanding of this term." (citing Pet. 26–28; Pet. Reply 20)).

We turn now to one additional statement by Petitioner. In the Reply, after stating that Patent Owner's "arguments for patentability over Michelson require accepting its base plate positions," Petitioner asserts that "a base plate is not limited to a specific shape *and can include a spacer*." Pet. Reply 20 (emphasis added). Even if we had agreed with Petitioner that "an integrated spacer is within the scope of [the] construction of a base plate" (*id.* at 9; *see supra* § II.B.2.b), that would not necessarily indicate that *any* structure with an integrated spacer would have been understood as a "base plate" in the context of the '234 patent. *See* PO Sur-reply 4 (arguing that Petitioner "improperly treat[s] the term 'plate' in th[e] construction as a nonce word, having no particular meaning or import"). Instead, as discussed above, Petitioner had the burden to demonstrate by a preponderance of the evidence *why* the relied-upon structure—i.e., implant 400 in Michelson—would have been understood as a "base plate" under the construction above—i.e., a fixation plate to stabilize adjacent vertebrae for fusion. Because Petitioner has not carried this burden, we determine, based on the complete record, that Petitioner has not demonstrated by a preponderance of the evidence that claim 35 would have been obvious based on Michelson.

b. Dependent Claims 37 and 39

Claims 37 and 39 depend directly from claim 35. *See* Ex. 1001, 12:32–37, 12:42–57. For the reasons discussed above as to claim 35 in the context of this asserted ground, we determine, based on the complete record, that Petitioner has not demonstrated by a preponderance of the evidence that claims 37 and 39 would have been obvious based on Michelson. Further, we

discuss below an *additional* reason that Petitioner has not demonstrated by a preponderance of the evidence that claim 37 would have been obvious based on Michelson.

Claim 37 recites, among other limitations, that the "base plate includes two lateral tabs" ("the 'lateral tabs' limitation"). Ex. 1001, 12:32–37. Addressing this limitation, Petitioner provides the following annotated version of Figure 21 of Michelson:

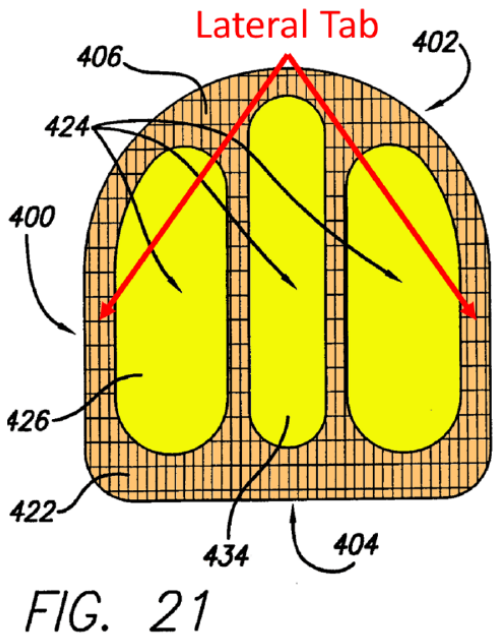

Michelson '045, Ex.1006, Fig.21

Pet. 43. For the annotated version of Figure 21, Petitioner added (1) orange overlay to implant 400, (2) yellow overlay to three interior spaces within implant 400, and (3) text with red arrows identifying two portions of implant 400 as "Lateral Tab[s]." *Id.* Referring to this annotated Figure, Petitioner states that Michelson "discloses two lateral tabs in [F]igure 21 (a top cross-sectional []view)." *Id.* In the Decision on Institution, we agreed with Patent Owner that Petitioner had not made a sufficient showing, at that stage of the

proceeding, that Michelson discloses the "lateral tabs" limitation. *See* Dec. Inst. 30–33.

Patent Owner argues that Petitioner has failed to show that Michelson discloses the "lateral tabs" limitation. *See* PO Resp. 38–41. Patent Owner begins by stating that "[t]he embodiment of the base plate depicted in Figure 2 of the '234 patent illustrates an example of a base plate having such lateral tabs, designated as element 60 in the specification" and by providing the following annotated version of Figure 2. *Id.* at 39.

FIG.2

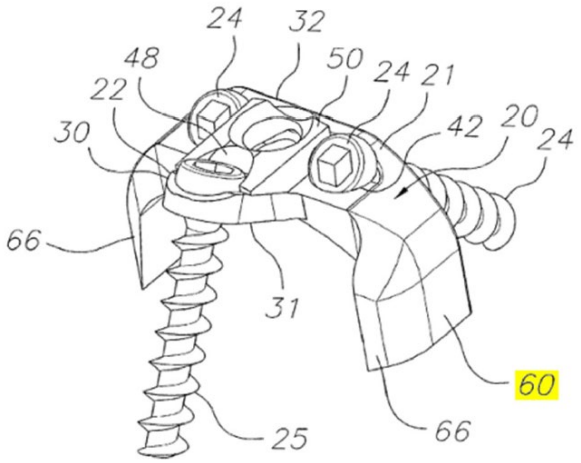

PO Resp. 39. In the annotated version of Figure 2, Patent Owner added yellow highlight to reference numeral 60. *Id.* Patent Owner argues that Petitioner, when addressing this limitation, "point[s] to the lateral sides of the implant" and "thus improperly seek[s] to conflate a 'tab'—*i.e.*, a projection, flap, or short strip attached to an object—with the side(s) of an object." *Id.* at 39–40 (citing Drewry Decl. ¶¶ 86–89). Patent Owner also contends that Petitioner's position "is contrary to the understood meanings of these terms and to how these two terms ('tabs' versus 'side') are used in

the ’234 patent to describe two different types of structures.” *Id.* at 40 (citing Ex. 1001, 4:24–28 (describing *side* wall 32), 6:33–38 (describing lateral *tabs* 60)). According to Patent Owner, Petitioner and Mr. Sherman “effectively seek to replace the word ‘tab’ with ‘side’” and do not “explain *why* these contiguous sides of the Michelson implant 400 are ‘tabs’ under a proper understanding of this term.” *Id.* at 41 (citing Drewry Decl. ¶ 90).

We are persuaded by Patent Owner’s argument. Petitioner identifies portions of implant 400 in Michelson as the recited “two lateral tabs,” but does not adequately explain *why* those portions are “tabs” under a proper understanding of that term. Patent Owner’s asserted understanding of a “tab”—as “a projection, flap, or short strip attached to an object” (PO Resp. 40)—(1) is consistent with the “tabs” depicted in Figure 2 of the ’234 patent and the related description, (2) aligns with Petitioner’s proposed construction in the Delaware Litigations (which has not been proposed by Petitioner in this proceeding), and (3) is supported by the testimony of Mr. Drewry. *See* Ex. 1001, 6:33–38 (describing lateral tabs 60 as “integrally formed with the primary member 21 and extending outwardly from opposite ends of the bottom surface 26 of the primary member to form, together with the primary member, a unitary substantially U-shaped structure”); Ex. 1009 at 4 & Ex. 1017 at 4 (Petitioner proposing to construe “lateral tabs” as “projections extending from the bottom surface of the primary member and fitting around the bone graft”); Drewry Decl. ¶ 89.

Even if Petitioner *had* relied on testimony from Mr. Sherman in the Petition’s discussion as to the scope of “lateral tabs,” Mr. Sherman simply rephrases Petitioner’s assertion as comporting with the understanding of one of ordinary skill in the art. *Compare* Sherman Pet. Decl. ¶ 124 (“A [person

of ordinary skill in the art] would understand that Michelson . . . figure 21, below, discloses two lateral tabs."), *with* Pet. 43 (stating that Michelson "discloses two lateral tabs in figure 21"); *see also* Pet. 42–44 (not citing to the Mr. Sherman's original Declaration on this issue). Lacking adequate explanation or support, Mr. Sherman's testimony on this issue is entitled to little or no weight. *See* 37 C.F.R. § 42.65(a).

In the Reply, Petitioner seeks to shift the burden to Patent Owner to prove that the identified structures *are not* "tabs," stating that Patent Owner "identifies no reason why Michelson's identified sides of the implant are not tabs other than simply asserting that they are not." Pet. Reply 21 (citing PO Resp. 71–73). As an initial matter, Petitioner's argument is improper in that it seeks to shift the burden on this issue. *See Dynamic Drinkware*, 800 F.3d at 1378–79; *see also* PO Sur-reply 12 (arguing that Petitioner is "incorrectly suggesting that [Patent Owner] bears or shares Petitioner['s] burden on this issue"). Moreover, Petitioner is incorrect on the merits in that (as noted above) Patent Owner provides a definition of "tabs" and persuasively argues, with support from Mr. Drewry, why the identified structure would not be understood as "tabs." *See* PO Resp. 38–41 (citing Drewry Decl. ¶¶ 86–90); *see also* PO Sur-reply 12 (arguing that Patent Owner "provided evidence of how [one of ordinary skill in the art] would have understood the term 'tabs' to be different from the sides of the Michelson implant" (citing PO Resp. 40–41)).

Petitioner also argues that the identified "lateral sides of the Michelson implant meet the descriptions of 'a lateral tab'" in the '234 patent because (1) "[c]laims 20 and 32 further describe the tabs as 'extending from the first member along first and second side surfaces of the bone graft in a

direction generally transverse to the first and second vertebral bodies'" and (2) the '234 patent "describes the tabs as 'extend[ing] around the bone graft 12 to prevent lateral shift of the graft and control subsidence of adjacent vertebrae as they set during healing.'" Pet. Reply 21 (quoting Ex. 1001, 10:67–11:3).

We do not view these arguments as assisting Petitioner in meeting its burden. Even assuming that the identified structures in Michelson have certain similarities with the *relative configuration* or *function* of the "tabs" as described in the '234 patent, as argued by Patent Owner, Petitioner has still not adequately explained why the identified *structures* in Michelson would have been understood as "tabs." *See* PO Sur-reply 12 ("Petitioner['s] argument that the lateral sides of Michelson perform similar functions to those performed by the recited lateral 'tabs' . . . is likewise unavailing. Even if true, it fails to give meaning to the structural term 'tabs.'"). The testimony of Mr. Sherman on this issue again mirrors Petitioner's Reply and thus suffers from the same infirmity. *Compare* Pet. Reply 21–22, *with* Sherman Reply Decl. ¶¶ 82–83.

For the reasons above, Petitioner has not persuasively shown that Michelson discloses the "lateral tabs" limitation. For this *additional* reason, we determine that Petitioner has not demonstrated by a preponderance of the evidence that claim 37 would have been obvious based on Michelson.

D. Asserted Obviousness of Claims 35, 37, and 39 Based on Fraser '106 and Michelson

Petitioner asserts that claims 35, 37, and 39 of the '234 patent are unpatentable under 35 U.S.C. § 103(a) based on Fraser '106 and Michelson. Pet. 4, 60–90; Pet. Reply 22–37. Patent Owner provides arguments addressing this asserted ground of unpatentability. PO Resp. 42–77; PO

Sur-reply 13–28. We summarize aspects of Fraser '106 and then address the arguments.

1. Fraser '106

In this ground, Petitioner relies on Fraser '106 in addition to Michelson (summarized above (*see* § II.C.1)). Fraser '106 describes its invention as "an implantable structure for promoting fusion of adjacent vertebral bodies." Ex. 1007, 1:14–16.

Figures 1 and 2 are reproduced below:

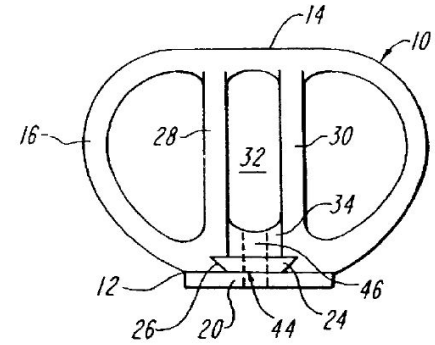

FIG. 1

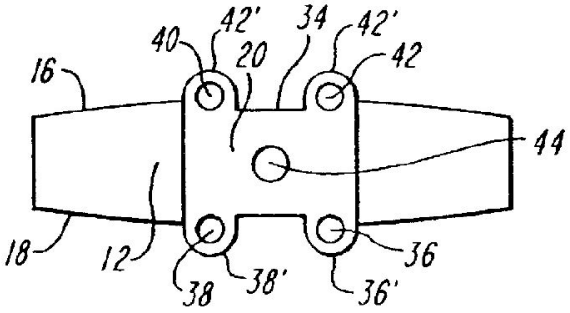

FIG. 2

Figure 1 is a "plan view of a fusion cage," and Figure 2 is a "view of the anterior face of the fusion cage" of Figure 1. Ex. 1007, 1:62–65. The depicted "cage" includes body 10, which, in turn, "includes an anterior face 12, a posterior face 14, a superior face 16, and an inferior face 18." *Id.* at 2:23–27. "The cage further includes a plate 20 that is matable with the body 10." *Id.* at 2:34–35. Fraser '106 discloses that "[a]lthough the plate 20 can be bonded firmly to the body 10 so that the plate and body cannot move with respect to each other, they can also be mated to allow movement with

respect to each other." *Id.* at 2:43–46.[19] Figure 2 shows bone screw holes 36, 38, 40, and 42. *Id.* at 2:67–3:2.

Figures 3 and 8 are reproduced below:

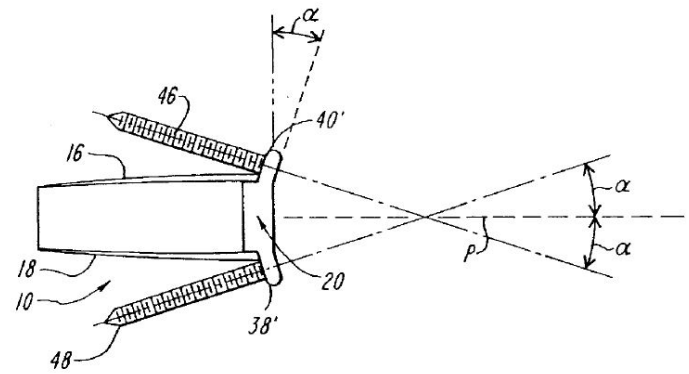

FIG. 3

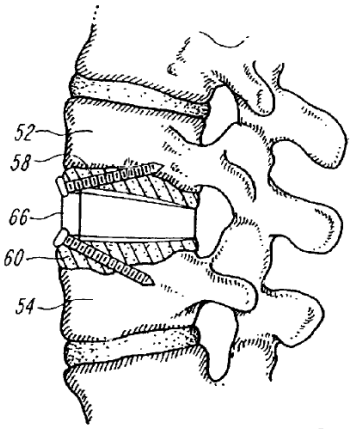

FIG. 8

Figure 3 is "a side view of the fusion cage of [Figure] 1 with bone screws" inserted and Figure 8 "depicts a portion of the spine following placement of the fusion cage" of Figure 1. Ex. 1007, 1:66–67, 2:9–10.[20]

---

[19] We refer to the embodiment in which plate 20 is "bonded firmly" to body 10 as the "one-piece embodiment," as does Petitioner. *See, e.g.*, Pet. 65; *cf.* PO Resp. 43 (referring to this as the "single-piece implant embodiment"). We refer to the embodiment in which plate 20 and body 10 are "mated to allow movement with respect to each other" as the "two-piece embodiment," as does Petitioner. *See, e.g.*, Pet. 64–65; *cf.* PO Resp. 64 (referring to this as the "two-piece implant embodiment").

[20] As to Figure 8, Fraser '106 explains that "portions of the vertebral bodies are shown cut-away to illustrate the penetration of the bone screws 58 and 60 into the bodies." Ex. 1007, 4:13–15.

Fraser '106 discloses:

> Prior to inserting a fusion cage between vertebral bodies, the space bounded by the body 10 and transverse elements 28 and 30 (if included) can be filled with autograft or allograft bone, or demineralized bone matrix (DBM) to promote fusion. Over a period of about three months the vertebral bodies fuse.

Ex. 1007, 4:38–43.

2. Analysis

a. Independent Claim 35

Petitioner contends that the proposed combination of Fraser '106 and Michelson satisfies each limitation. Pet. 60–77. Specifically, Petitioner presents arguments applying the one-piece embodiment of Fraser '106 in combination with Michelson and, in the alternative, the two-piece embodiment in combination with Michelson.[21] *See id.* To support its arguments, Petitioner identifies certain passages in the cited references and explains the significance of each passage with respect to the corresponding claim limitation. *Id.* Below, we discuss the parties' positions as to (1) whether the one-piece embodiment in Fraser '106 satisfies the requirement for a "base plate" (Ex. 1001, 12:10–11) and (2) whether the two-piece

[21] As noted in the Decision on Institution (at page 44), Petitioner appears to only rely on the two-piece embodiment of Fraser '106 in the alternative and to the extent we construe "base plate" to include the "distinct from a spacer" requirement proposed by Patent Owner. *See* Pet. 63–64 ("Therefore, for the sake of completeness in this petition, and *to the extent that the Patent Owner argues and the Board agrees that the claims require both a base plate and a separate spacer* (i.e., a two-piece implant), this ground also explains how Fraser '106 discloses a two-piece implant." (emphasis added)). Although we do not adopt the "distinct from a spacer" requirement, to fully address any potential argument by Petitioner, we address the proposed combination of the two-piece embodiment of Fraser '106 and Michelson.

embodiment in Fraser ’106 satisfies the requirement that the “base plate” is “adjacent to lateral extents of the bone graft material such that the first and second bone bodies engage the bone graft material” (*id.* at 12:14–18) (“the ‘adjacent to lateral extents’ limitation”).

(1) “Base Plate”

In the context of the relied-upon combination of Fraser 106’s one-piece embodiment and Michelson, Petitioner asserts that the one-piece embodiment in Fraser ’106 discloses a “base plate.” Pet. 61–63; Pet. Reply 22. Patent Owner disagrees. PO Resp. 43–55; PO Sur-reply 13–15. Addressing this limitation, Petitioner provides the following side-by-side comparison of annotated versions of Figure 3 of the ’234 patent and Figure 8 of Fraser ’106:

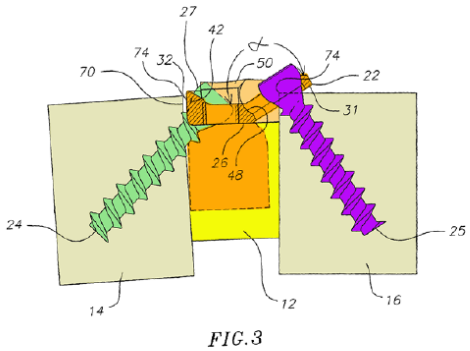

’234 patent, Ex.1001, Fig.3

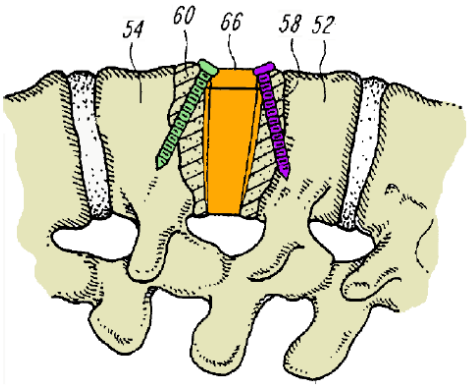

Fraser ’106, Ex.1007, Fig.8

Pet. 62. For the annotated version of Figure 3 of the ’234 patent, Petitioner added (1) tan overlay to vertebral bodies 14 and 16, (2) orange overlay to base plate 20, (3) green overlay to bone screw 24, and (4) purple overlay to bone screw 25. *Id.* For the annotated version of Figure 8 of Fraser ’106, Petitioner added (1) tan overlay to the vertebral bodies, (2) orange overlay to body 10/plate 20 together, (3) green overlay to bone screw 60, and (4) purple

overlay to bone screw 58. *Id.* Referring to these annotated Figures, Petitioner states:

> [L]ike the '234 patent, Fraser '106 discloses a fixation plate 66 to stabilize adjacent vertebrae for fusion. Fraser '106 explains that "[t]he plate is configured to receive, retain and orient bone screws, thereby holding the fusion cage and adjacent vertebral bodies in a stable relationship to promote fusion." Ex.1007, 1:36–42; *see* Ex.1005, ¶171 (describing how the plate stabilizes the bones for fusion).

Pet. 61.[22] Petitioner also provides this annotated version of Figure 1 of Fraser '106:

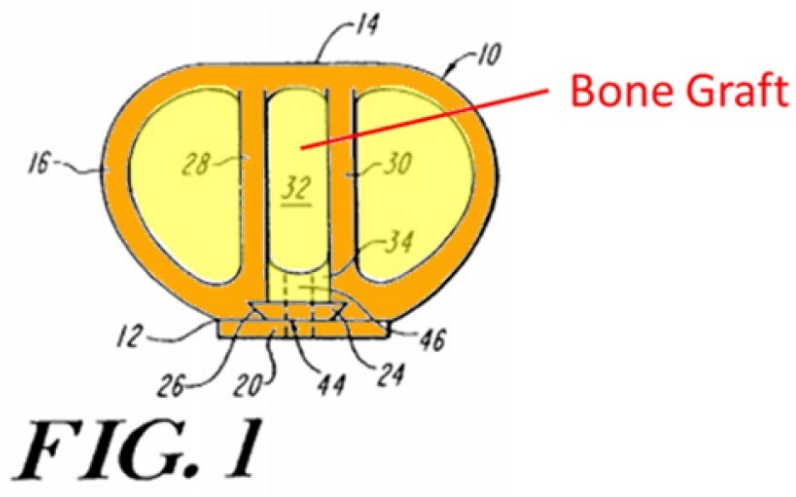

Pet. 62. For the annotated version of Figure 1 of Fraser '106, Petitioner added (1) orange overlay to body 10/plate 20 together and (2) yellow overlay to areas identified as "Bone Graft." *Id.* Petitioner identifies the orange structure in this annotated figure—i.e., body 10/plate 20 together—as

[22] As noted in the Decision on Institution, we view Petitioner's use of reference numeral 66 in this statement as a typographical error, and we understand Petitioner to identify body 10/plate 20 together as the "base plate" (as overlaid in orange in the annotated versions of Figures 1 and 8 of Fraser '106 above). *See* Dec. Inst. 38 n.21. Petitioner did not address this issue at trial.

the "base plate" in the context of reliance on Fraser '106's one-piece embodiment. Pet. 63. In the Decision on Institution, we addressed Patent Owner's arguments relating to proposed requirements not adopted in the preliminary construction (or the construction above) and determined that Petitioner had made a sufficient showing, at that stage of the proceeding, that the one-piece embodiment of Fraser discloses a "base plate." *See* Dec. Inst. 37–42.

In the Response, Patent Owner argues that, "[d]ue to its similarities in shape and form to the Michelson implant 400, the single-piece implant embodiment of Fraser '106 is not a 'base plate' because it is not a fixation ***plate***" for many of the same reasons discussed above in context of the prior asserted ground. PO Resp. 45 (citing *id.* at 19–38); *see supra* § II.C.2.a. Again, although we do not adopt Patent Owner's shape- and function-based definitions as to "base plate," we are persuaded by Patent Owner's more general argument that Petitioner has not satisfied its burden to show by a preponderance of the evidence that one of ordinary skill in the art would have understood body 10/plate 20 of Fraser '106 together as a "base plate"—i.e., a fixation plate to stabilize adjacent vertebrae for fusion. *See* PO Resp. 54.

In the only statements in the Petition that address the requirements *currently* in the construction of "base plate," Petitioner first states that, "like the '234 patent, Fraser '106 discloses a fixation plate 66 to stabilize adjacent vertebrae for fusion." Pet. 61.[23] Although this statement does not rely on

[23] As mentioned above (note 23), Petitioner identifies body 10/plate 20—not element 66—as the "base plate" when relying on the one-piece embodiment in Fraser '106.

any declaration testimony, in the relevant testimony, Mr. Sherman merely presents the same statement as his opinion, without any additional explanation. *See* Sherman Pet. Decl. ¶ 171 (stating that "like the '234 patent, Fraser '106 discloses a fixation plate 66 to stabilize adjacent vertebrae for fusion"); 37 C.F.R. § 42.65(a). Petitioner also quotes a disclosure from the Summary of the Invention in Fraser '106 that "[t]he plate is configured to receive, retain and orient bone screws, thereby holding the fusion cage and adjacent vertebral bodies in a stable relationship to promote fusion." Ex. 1007, 1:36–42, *quoted at* Pet. 61 (citing Sherman Pet. Decl. ¶ 171)). As clarified at the oral argument, however, this passage relates to just the "plate" *as that term is used in Fraser '106*, not to body 10/plate 20 together—i.e., the "base plate" identified by Patent Owner. *See* Tr. 43:14–26.

In the Reply, Petitioner contends that Patent Owner's "arguments for patentability over Fraser ['106] in view of Michelson require accepting its base plate positions" and then simply states that under the construction above (agreed to by Petitioner) "Fraser ['106] in view of Michelson renders the claims obvious as explained in the Petition." Pet. Reply 22 (citing PO Resp. 9–12, 42–45, 65–73; Pet. 61–65; Sherman Reply Decl. ¶ 84). In the cited declaration testimony, Mr. Sherman presents the same statement as his opinion, without any additional explanation. *See* Sherman Reply Decl. ¶ 84.

As an initial matter, it is not Patent Owner's ultimate burden to demonstrate patentability of the challenged claims. *See Dynamic Drinkware*, 800 F.3d at 1378–79; *In re Magnum Oil*, 829 F.3d at 1376; Pet. Reply 22 (discussing Patent Owner's "arguments for patentability over Fraser ['106] in view of Michelson").

Further, although (as discussed in the context of the prior asserted ground), we do not adopt Patent Owner's shape- and function-based definitions as to "base plate," we agree with Patent Owner's more general argument that Petitioner has not satisfied *its burden* to show that one of ordinary skill in the art would have understood body 10/plate 20 in Fraser '106 together as a "base plate." *See* PO Resp. 54 ("In their Petition, Petitioners simply identify the entire Fraser '106 [one-piece] embodiment (*i.e.*, fusion cage body 10 combined with plate 20) as the claimed 'base plate' (*see* Pet. at 24–27), and they do not explain ***why*** this combined structure—as opposed to plate 20 alone—purportedly is a 'plate,' under a proper understanding of this term." (citing Drewry Decl. ¶ 114)); *see also* PO Sur-reply 1 (arguing that, in the Reply, Petitioner "ignore[s] that they failed to show that the . . . Fraser '106 [one-piece] embodiment is a plate and thus fail to show that it is a 'base plate' under the Board's preliminary construction"), 13 ("As detailed in the [Response], [one of ordinary skill in the art] would not have considered the Fraser [one-piece] embodiment to be a 'base plate' or 'fixation plate' because it is not a plate." (citing PO Resp. 45–55)).

Petitioner bears the burden in this proceeding to explain why body 10/plate 20 *together*[24] would have been considered a "base plate" under the construction above, which Petitioner has adopted. *See* Pet. Reply 18, 22. Having considered the argument and evidence presented by Petitioner on

[24] *See* PO Resp. 49 ("The fact that [one of ordinary skill in the art] would not have viewed the Fraser [one-piece] embodiment as a plate is further demonstrated by the terminology used in Fraser '106 itself. While Fraser '106 uses the term 'plate' to describe a particular component, it does ***not*** use this term to describe the implant as a whole."); Tr. 64:21–65:17.

this issue in the complete record as developed at trial (as summarized above), we agree with Patent Owner that Petitioner has not satisfied its burden on this issue. *See* PO Sur-reply 15 ("In the[] Petition, and now again in the[] Reply, Petitioner[] simply identif[ies] the [one-piece] embodiment as a 'base plate,' and [Petitioner] fail[s] to explain ***why*** this combined assembly—as opposed to plate 20 alone—purportedly is a 'fixation ***plate***' under a proper understanding of this term." (citing Pet. 61–63; Pet. Reply 22)).

We turn now to one additional statement by Petitioner. In the Reply, after stating that Patent Owner's "arguments for patentability over Fraser in view of Michelson require accepting its base plate positions," Petitioner asserts that "a base plate is not limited to a specific shape *and can include a spacer*." Pet. Reply 22 (emphasis added). Even if we had agreed with Petitioner that "an integrated spacer is within the scope of [the] construction of a base plate" (*id.* at 9; *see supra* § II.B.2.b), that would not necessarily indicate that *any* structure with an integrated spacer would have been understood as a "base plate" in the context of the '234 patent. Instead, as discussed above, Petitioner had the burden to demonstrate by a preponderance of the evidence *why* the relied-upon structure—i.e., body 10/plate 20 together in the one-piece embodiment in Fraser '106—would have been understood as a "base plate" under the construction above—i.e., a fixation plate to stabilize adjacent vertebrae for fusion. Because Petitioner has not carried this burden, we determine, based on the complete record, that Petitioner has not demonstrated by a preponderance of the evidence that claim 35 would have been obvious based on Fraser '106 and Michelson.

(2) The "Adjacent to Lateral Extents" Limitation

In the context of the alternative proposed combination of Fraser '106's *two*-piece embodiment and Michelson, Petitioner asserts that the "base plate" in the two-piece embodiment in Fraser '106 satisfies the "adjacent to lateral extents" limitation. Pet. 71–73; Pet. Reply 34–36. Patent Owner disagrees. PO Resp. 73–76; PO Sur-reply 25–27.

In the context of the alternative proposed combination of Fraser '106's *two*-piece embodiment and Michelson, Petitioner relies solely on plate 20 in Fraser '106 as the recited "base plate." *See* Pet. 64–65. For the "adjacent to lateral extents" limitation, Petitioner presents arguments as to the combination of Fraser '106's *one*-piece embodiment and Michelson and then relies on those same arguments as to the alternative proposed combination of Fraser '106's *two*-piece embodiment and Michelson. *See* Pet. 73 ("For the same reasons discussed above with respect to the single-piece embodiment, Fraser '106 teaches the remaining claim elements with respect to the two-piece embodiment.").

Addressing the "adjacent to lateral extents" limitation in the context of the combination of Fraser '106's *one*-piece embodiment and Michelson, Petitioner states that "Fraser '106 teaches that bone graft can be filled with fusion promoting substances." Pet. 71. Petitioner highlights Fraser '106's disclosure that "the space bounded by the body 10 and transverse elements 28 and 30 (if included) can be filled with autograft or allograft bone, or demineralized bone matrix (DBM) to promote fusion." Ex. 1007, 4:37–42, *quoted at* Pet. 71–72 (citing Sherman Pet. Decl. ¶ 197). According to Petitioner, one of ordinary skill in the art "would understand that when the Fraser '106 implant engages the surfaces of the vertebrae, the first and

second bone bodies would be in direct contact with the bone graft material" and thus would *also* "understand that Fraser '106 discloses that the first and second bone bodies engage the bone graft material." Pet. 72 (citing Sherman Pet. Decl. ¶ 197). In the Decision on Institution, we did not substantively address this limitation in the context of the alternative proposed combination of Fraser '106's two-piece embodiment and Michelson. *See* Dec. Inst. 43–44.

In the Response, Patent Owner presents two arguments as to why Petitioner has failed to show that Fraser '106's two-piece embodiment satisfies the requirement that the "base plate" is "adjacent to lateral extents of the bone graft material." *See* PO Resp. 73–76. First, Patent Owner argues that Petitioner "do[es] not provide a specific argument showing how the identified 'base plate' in the two-piece implant embodiment—*i.e.*, Fraser '106's plate 20—satisfies this limitation" and argues that Petitioner's reliance on the statements as to the one-piece embodiment in Fraser '106 to address the two-piece embodiment (Pet. 73) is merely an "unsupported, conclusory assertion." PO Resp. 73.

We agree with this argument. "In an IPR, the petitioner has the burden from the onset to show with particularity why the patent it challenges is unpatentable." *Harmonic Inc. v. Avid Tech., Inc.*, 815 F.3d 1356, 1363 (Fed. Cir. 2016) (citing 35 U.S.C. § 312(a)(3)); *see also Intelligent Bio-Systems, Inc. v. Illumina Cambridge Ltd.*, 821 F.3d 1359, 1369 (Fed. Cir. 2016) ("It is of the utmost importance that petitioners in the IPR proceedings adhere to the requirement that the initial petition identify 'with particularity' the 'evidence that supports the grounds for the challenge to each claim.'" (quoting 35 U.S.C. § 312(a)(3))). Given the differences in the structure

identified as the "base plate" in the context of the two relied-upon embodiments of Fraser '106—body 10/plate 20 *together* for the one-piece embodiment (Pet. 62 (orange structure)) versus plate 20 *alone* for the two-piece embodiment (Pet. 65 (orange structure))—we are persuaded of the inadequacy of the Petition's discussion of the one-piece embodiment in Fraser '106 to address the two-piece embodiment as to the "adjacent to lateral extents" limitation. *See* Pet. 73. Notably, in the Reply, Petitioner devotes over two pages to addressing this issue, which stands in contrast to the brief discussion in the Petition. *See* Pet. Reply 34–36.

Second, turning to the merits, Patent Owner argues that the two-piece embodiment in Fraser '106 does not satisfy the requirement that the "base plate" is "adjacent to lateral extents of the bone graft material" when applying Petitioner's implied construction of that phrase. *See* PO Resp. 73–76. Specifically, Patent Owner provides the annotated version of Figure 1 of Fraser '106 below and states that Petitioner "effectively contend[s] that the 'base plate' in the [one-]piece embodiment is 'adjacent to lateral extents of the bone graft material' because the lateral extents of the bone graft material are *next to, contained within, and/or bounded by* the alleged 'base plate,' fusion cage body 10 combined with plate 20." *Id.* at 74 (emphasis added) (citing Drewry Decl. ¶ 139).

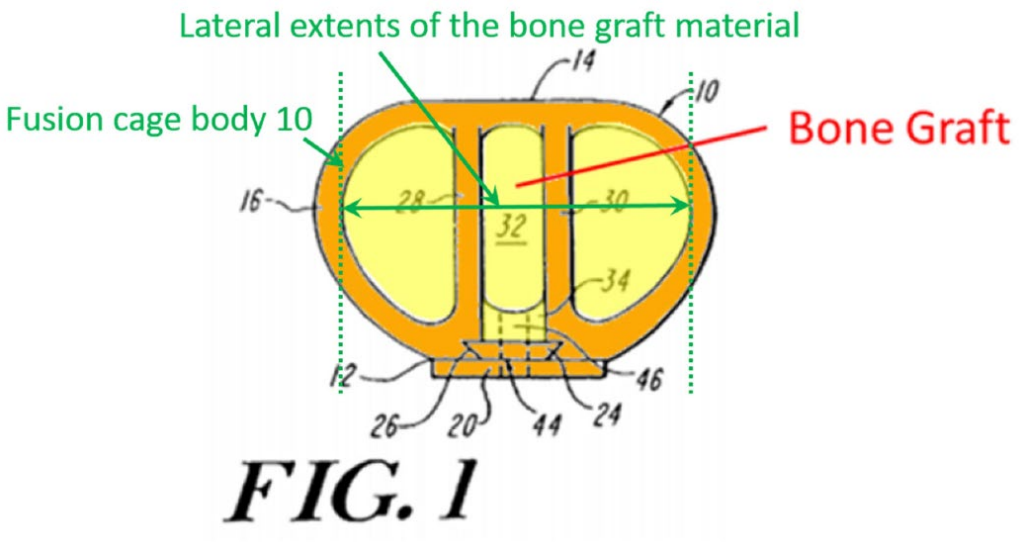

Fraser '106, Ex.1007, Fig.1

PO Resp. 74. For the annotated version of Figure 1 of Fraser '106, Patent Owner maintained the (1) orange overlay on body 10 and plate 20 and (2) yellow overlay on areas identified as "Bone Graft" previously added by Petitioner (*see* Pet. 62) and added (1) two vertical green dotted lines and an arrow identifying the "Lateral extents of the bone graft material" and (2) green text and an arrow identifying "Fusion case body 10." PO Resp. 74. Patent Owner then provides an additional annotated version of Figure 1 of Fraser '106 and states that, for the two-piece embodiment—in which the identified "base plate" is *only* plate 20 (in orange below)— "Petitioner[] ha[s] failed to show that the base plate . . . is 'adjacent to lateral extents of the bone graft material.'" *Id.* at 74–75 (citing Drewry Decl. ¶ 140).

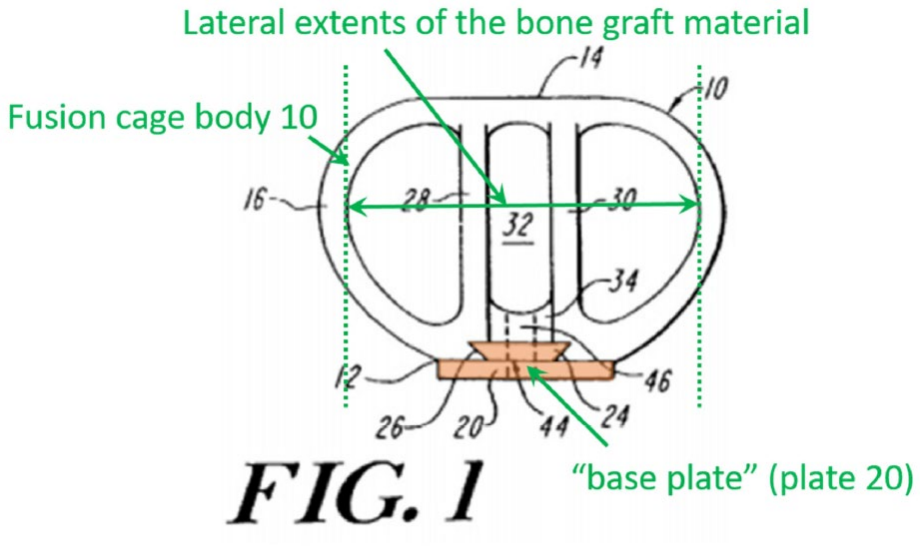

Fraser '106, Ex.1007, Fig.1

PO Resp. 75. For this annotated version of Figure 1 of Fraser '106, Patent Owner maintained the orange overlay on plate 20 previously added by Petitioner (*see* Pet. 65) and added (1) two vertical green dotted lines and an arrow identifying the "Lateral extents of the bone graft material" and (2) green text and arrows identifying "Fusion case body 10" and "'base plate' (plate 20)." *Id.* According to Patent Owner, the identified "base plate"—plate 20—"is not next to, does not form the boundary of, intersect with, or extent beyond the lateral extents of the bone graft material." *Id.* (citing Drewry Decl. ¶ 140).

In the Reply, Petitioner presents two arguments. *See* Pet. Reply 34–36. First, Petitioner asserts that "adjacent" in the claim language at issue means "nearby" and that the identified "base plate"—plate 20 alone—"is nearby the lateral extents of the bone graft." *Id.* at 35 (citing Sherman Reply Decl. ¶¶ 122–124). Second, Petitioner provides the following annotated versions of Figures 1 and 2 from Fraser '106, asserting that, in these Figures (provided in the Petition), Petitioner "identified the direct contact region

between the bone graft material (yellow) and the base plate (orange) in depression 34." *Id.* (citing Pet. 68, 70–73).

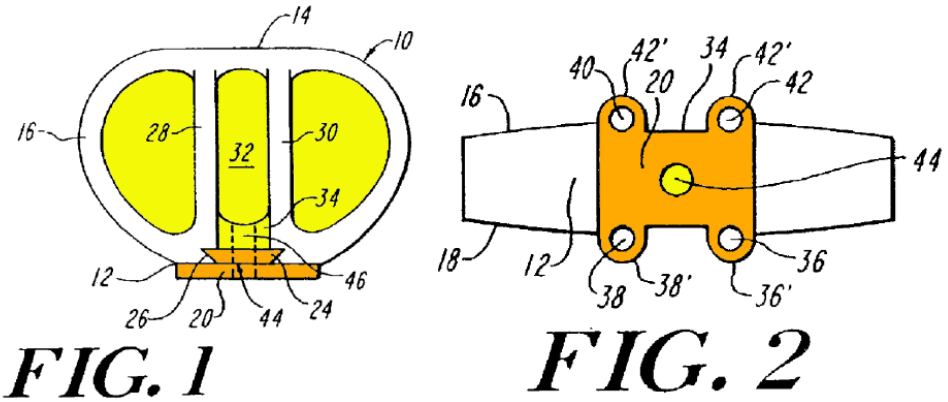

Fraser '106, Ex.1007, Figs. 1 and 2

Pet. Reply 36. For the annotated version of Figure 1, Petitioner added (1) orange overlay to plate 20 and (2) yellow overlay to three interior spaces within body 10. *Id.* For the annotated version of Figure 2, Petitioner added (1) orange overlay to plate 20 and (2) yellow overlay to hole 44. *Id.* According to Petitioner, "[t]enon 24 is 'next' to the bone graft material, and by 'intersecting' with it, the tenon forms the anterior 'boundary' of the bone graft material." *Id.*

We are not persuaded by either of Petitioner's arguments. As to the first, even assuming that "adjacent" means "nearby," the record does not support Petitioner's assertion that plate 20 is "nearby" the "lateral extents of the bone graft material"—i.e., the two vertical dotted lines in the annotated figures above (the location of which Petitioner does not contest)—under any reasonable understanding of "nearby." *See, e.g.*, Pet. Reply 34 (reproducing the annotated figure from PO Resp. 75); PO Sur-reply 27 ("It appears from Petitioner['s] contentions that any base plate or spinal fixation device would be 'nearby' the lateral extents of the bone graft materials under Petitioner['s]

expansive use of this term, thereby improperly rendering this limitation superfluous and meaningless."). Instead, we agree with Patent Owner that "nearby" is a "relative term[]" and that, if anything, "plate 20 is next to and nearby the ***anterior*** and ***medial*** extents—not the ***lateral*** extents—of the bone graft material" as required by the claim language. PO Sur-reply 26; *see also* PO Resp. 75 (showing annotated Figure 1 of Fraser '106). The testimony of Mr. Sherman on this issue largely mirrors Petitioner's Reply and does not adequately support why plate 20 would be considered "nearby" the identified "lateral extents of the bone graft material." *Compare* Pet. Reply 34–35, *with* Sherman Reply Decl. ¶¶ 122–124; *see also* Sherman Reply Decl. ¶ 124 ("As shown in PO's figure, above, Fraser's plate 20 is nearby the lateral extents of the bone graft.").

We are also not persuaded by Petitioner's second argument, which essentially reads out "lateral extents of" from the claim language at issue. *See* PO Sur-reply 26 (arguing that "Fraser's plate 20 is next to and nearby the ***anterior*** and ***medial*** extents—not the ***lateral*** extents—of the bone graft material"). The testimony of Mr. Sherman on this issue again mirrors Petitioner's Reply and thus suffers the same infirmity. *Compare* Pet. Reply 35–36, *with* Sherman Reply Decl. ¶¶ 125–128. For the reasons above, Petitioner has not persuasively shown that the two-piece embodiment in Fraser '106 satisfies the "adjacent to lateral extents" limitation.

(3) Conclusion

For the reasons above, Petitioner has not persuasively shown that *either* of the two proposed combinations in the context of this asserted ground—the combination of Fraser '106's one-piece embodiment and Michelson as well as the combination of Fraser '106's two-piece

embodiment and Michelson—satisfy each limitation of claim 35. Thus, we determine, based on the complete record, that Petitioner has not demonstrated by a preponderance of the evidence that claim 35 would have been obvious based on the combination of Fraser '106 and Michelson.

b. Dependent Claims 37 and 39

Claims 37 and 39 depend directly from claim 35. *See* Ex. 1001, 12:32–37, 12:42–57. For the reasons discussed above as to claim 35 in the context of this asserted ground, we determine, based on the complete record, that Petitioner has not demonstrated by a preponderance of the evidence that claims 37 and 39 would have been obvious based on Fraser '106 and Michelson. Further, we discuss below an *additional* reason that Petitioner has not demonstrated by a preponderance of the evidence that claim 37 would have been obvious based on Fraser '106 and Michelson.

Addressing the "lateral tabs" limitation in claim 37, Petitioner provides the following annotated version of Figure 1 of Fraser '106:

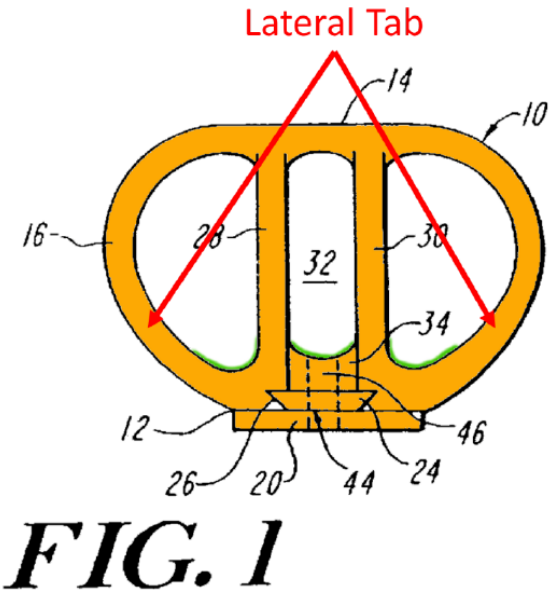

Fraser '106, Ex.1007, Fig.1

Pet. 78–79. For the annotated version of Figure 1, Petitioner added (1) orange overlay to body 10/plate 20 together, (2) curved green lines to portions of the three interior spaces within body 10, and (3) text with red arrows identifying two portions of body 10 as "Lateral Tab[s]." *Id.* Referring to this annotated Figure, Petitioner states that "Fraser '106 discloses two lateral tabs that extend from opposite ends of the bottom surface (green) of the base plate." *Id.* at 78. In the Decision on Institution, we agreed with Patent Owner that Petitioner had not made a sufficient showing, at that stage of the proceeding, that Fraser '106 discloses the "lateral tabs" limitation. *See* Dec. Inst. 50–53.

Patent Owner argues that Petitioner has failed to show that either of the two relied-upon embodiments in Fraser '106 discloses the "lateral tabs" limitation. *See* PO Resp. 61–63 (discussing the one-piece embodiment), 76–77 (discussing the two-piece embodiment). As to the one-piece embodiment, Patent Owner argues that (as with claim 37 in the context of the prior asserted ground) Petitioner again "improperly conflate[s] a 'tab'—*i.e.*, a projection, flap, or short strip attached to an object—with the side(s) of an object." *Id.* at 62 (citing Drewry Decl. ¶ 124). According to Patent Owner, "[t]he structures on fusion cage body 10 identified by Petitioner[] as 'lateral tabs' in Fraser '106 Figure 1 are not 'tabs' or 'projections' but rather are sides that connect the front portion of the body 10 to the rear portion of the body in a contiguous manner." *Id.* (citing Drewry Decl. ¶ 124). According to Patent Owner, Petitioner and Mr. Sherman "effectively seek to replace the word 'tab' with 'side'" and do not "explain *why* these contiguous sides of the [one-]piece implant embodiment of Fraser '106 are 'tabs' under a proper understanding of this term." *Id.* at 63 (citing Drewry Decl. ¶ 125).

As to the two-piece embodiment of Fraser '106, Patent Owner asserts that "Petitioner[] do[es] not even argue that the base plate in this embodiment (*i.e.*, plate 20 alone) has two lateral tabs that are spaced apart from each other to provide an open space for location of the bone graft material therein." PO Resp. 76 (citing Pet. 77–80). According to Patent Owner, "Fraser '106's plate 20 clearly does not have these structures." *Id.* (citing Pet. 65; Drewry Decl. ¶¶ 143–144).

We agree with Patent Owner. As to the one-piece embodiment in Fraser '106, similar to the situation in the context of the prior ground, Petitioner identifies portions of body 10 in Fraser '106 as the "two lateral tabs," but does not adequately explain *why* those portions are "tabs" under a proper understanding of that term. Patent Owner's asserted understanding of a "tab"—as "a projection, flap, or short strip attached to an object" (PO Resp. 62)—(1) is consistent with the "tabs" depicted in Figure 2 of the '234 patent and the related description, (2) aligns with Petitioner's proposed construction in the Delaware Litigations (which has not been proposed by Petitioner in this proceeding), and (3) is supported by the testimony of Mr. Drewry. *See* Ex. 1001, 6:33–38; Ex. 1009 at 4; Ex. 1017 at 4; Drewry Decl. ¶ 124.

Even if Petitioner *had* relied on testimony from Mr. Sherman in the Petition's discussion as to the scope of "lateral tabs," Mr. Sherman simply rephrases Petitioner's assertion as comporting with the understanding of one of ordinary skill in the art. *Compare* Sherman Pet. Decl. ¶¶ 214–215, *with* Pet. 78–79; *see also* Pet. 78–79 (not citing to the Mr. Sherman's original Declaration on this issue). Lacking adequate explanation or support, Mr.

Sherman's testimony on this issue is entitled to little or no weight. *See* 37 C.F.R. § 42.65(a).

In the Reply, Petitioner merely references its arguments as to the "lateral tabs" limitation in the context of the prior asserted ground. *See* Pet. Reply 26–27 (discussing Sherman Reply Decl. ¶¶ 96–97). Patent Owner does the same. *See* PO Sur-reply 18–19 (discussing PO Resp. 61–63; Drewry Decl. ¶¶ 124–125). For reasons similar to those discussed above (*see* § II.C.2.b), we are not persuaded by Petitioner's arguments as to the one-piece embodiment of Fraser '106, as Petitioner improperly seeks to shift the burden to Patent Owner and has not met its burden on the issue. The testimony of Mr. Sherman on this issue mirrors his prior testimony as to the prior asserted ground and suffers from the same infirmities discussed above. *Compare* Sherman Reply Decl. ¶¶ 96–96, *with id.* ¶¶ 82–83.

Turning to the two-piece embodiment in Fraser '106, we agree with Patent Owner that Petitioner does not present arguments in the Petition that plate 20 alone satisfies the "lateral tabs" limitation. *See* PO Resp. 76. In the relevant part of the Petition, Petitioner makes no reference to any portion of plate 20 *alone*—i.e., the "base plate" identified in the context of the two-piece embodiment. *See* Pet. 77–79. Instead, Petitioner only addresses this limitation as to the "base plate" identified in the context of the one-piece embodiment of Fraser '106—i.e., body 10/plate 20 *together*. *See* Pet. 79.

In the Reply, Petitioner merely references its discussion as to the "lateral tabs" limitation in the context of reliance on the one-piece embodiment of Fraser '106 and states that "[t]his same analysis applies to Fraser's two-piece embodiment in view of Michelson." Pet. Reply 37 (citing Sherman Reply Decl. ¶ 130).

We are not persuaded by Petitioner's argument. As an initial matter, Petitioner's reliance on the two-piece embodiment of Fraser '106 as to the "lateral tabs" limitation is untimely because (as discussed above) it was not presented in the Petition. *See* Consolidated Trial Practice Guide (Nov. 2019), *available at* https://www.uspto.gov/TrialPracticeGuideConsolidated ("TPG"), 73 ("Petitioner may not submit new evidence or argument in reply that it could have presented earlier, e.g. to make out a prima facie case of unpatentability."). Further, Petitioner's position defies reason in that the structure identified as the "lateral tabs" in the context of the one-piece embodiment of Fraser '106 is a portion of body 10 (Pet. 79), which is *not* part of the "base plate" identified in the context of Petitioner's reliance on the two-piece embodiment. *See* Pet. 63–65 (identifying only plate 20 as the "base plate").

For these reasons, Petitioner has not persuasively shown that Fraser '106 discloses the "lateral tabs" limitation. For this *additional* reason, we determine that Petitioner has not demonstrated by a preponderance of the evidence that claim 37 would have been obvious based on Fraser '106 and Michelson.

E. Petitioner's Motion to Exclude Evidence

Petitioner moves to exclude certain testimony in the deposition transcript of Patent Owner's declarant, Mr. Drewry, elicited on redirect. *See* Paper 39 at 1. Specifically, Petitioner seeks to exclude page 197, line 20 through page 205, line 16 of Exhibit 1024 as improper redirect testimony based on allegedly leading questions from Patent Owner's counsel. *See id.* at 4–15. In its opposition, Patent Owner notes that neither party relied upon

the portions of Mr. Drewry's testimony identified by Petitioner. *See* Paper 40 at 1–2.

We dismiss Petitioner's motion as moot because in this Decision we do not rely on the portion of Mr. Drewry's deposition testimony identified by Petitioner. *See* TPG 79–80 ("In the Board's experience, consideration of the objected-to evidence is often unnecessary to resolve the patentability of the challenged claims, and the motion to exclude is moot.").

III. CONCLUSION

Upon consideration of the Petition, Response, Reply, Sur-reply and the evidence of record, we determine that Petitioner (1) has *not* proven by a preponderance of the evidence that claims 35, 37, and 39 would have been obvious based on Michelson and (2) has *not* proven by a preponderance of the evidence that claims 35, 37, and 39 would have been obvious based on either relied-upon embodiment of Fraser '106 and Michelson. We dismiss as moot Petitioner's motion to exclude evidence.

IV. ORDER

For the reasons above, it is:

ORDERED that Petitioner has not proven by a preponderance of the evidence that any of claims 35, 37, and 39 of the '234 patent are unpatentable;

FURTHER ORDERED that Petitioner's Motion to Exclude Evidence (Paper 39) is dismissed as moot; and

FURTHER ORDERED that, because this is a Final Written Decision, parties to the proceeding seeking judicial review of the decision must comply with the notice and service requirements of 37 C.F.R. § 90.2.

In summary:

Claims	35 U.S.C. §	Reference(s)/ Basis	Claims Shown Unpatentable	Claims Not Shown Unpatentable
35, 37, 39	103(a)	Michelson		35, 37, 39
35, 37, 39	103(a)	Fraser ’106, Michelson		35, 37, 39
Overall Outcome				35, 37, 39

FOR PETITIONER:

Dion M. Bregman (lead counsel)
Jason C. White
Scott D. Sherwin (*pro hac vice*)
James J. Kritsas
MORGAN, LEWIS & BOCKIUS LLP
dion.bregman@morganlewis.com
jason.white@morganlewis.com
scott.sherwin@morganlewis.com
james.kritsas@morganlewis.com

Jeffrey N. Costakos
Matthew W. Peters (*pro hac vice*)
FOLEY & LARDNER LLP
jcostakos@foley.com
mpeters@foley.com

Timothy Devlin
Stephanie Berger (*pro hac vice*)
DEVLIN LAW FIRM LLC
td-ptab@devlinlawfirm.com
sberger@devlinlawfirm.com

FOR PATENT OWNER:

Erik B. Milch (lead counsel)
Frank Pietrantonio
Jennifer Volk-Fortier
Joseph Van Tassel
Dustin M. Knight
COOLEY LLP
emilch@cooley.com
fpietrantonio@cooley.com
jvolkfortier@cooley.com
jvantassel@cooley.com
dknight@cooley.com