UNITED STATES PATENT AND TRADEMARK OFFICE

BEFORE THE PATENT TRIAL AND APPEAL BOARD

GLOBAL FOUNDRIES U.S., INC., GLOBALFOUNDRIES DRESDEN MODULE ONE LLC & CO. KG, GLOBALFOUNDRIES DRESDEN MODULE TWO LLC & CO. KG, and THE GILLETTE COMPANY

Petitioners

v.

ZOND, LLC
Patent Owner

Case No. IPR2014-01100[1]

Patent 7,604,716 B2

PATENT OWNER'S NOTICE OF APPEAL
35 U.S.C. § 142 & 37 C.F.R. § 90.2

[1] Case IPR 2014-00973 has been joined with the instant proceeding.

Pursuant to 37 C.F.R. § 90.2(a), Patent Owner, Zond, LLC, hereby provides notice of its appeal to the United States Court of Appeals for the Federal Circuit for review of the Final Written Decision of the United States Patent and Trademark Office ("USPTO") Patent Trial and Appeals Board ("PTAB") in *Inter Partes* Review 2014-01100, concerning U.S. Patent 7,604,716 ("the '716 patent"), entered on September 23, 2015, attached hereto as Appendix A.

ISSUES TO BE ADDRESSED ON APPEAL

A. Whether the PTAB erred when construing, according to its broadest reasonable interpretation in light of the specification of the '716 patent as understood by one of ordinary skill in the art at the time of the invention, the term "without developing an electrical breakdown condition in the chamber," as recited in the claims of the '716 patent, as "substantially eliminating the possibility of developing an electrical breakdown condition in the chamber?"

B. Whether the PTAB erred in finding claims 12 and 13 unpatentable as being obvious under 35 U.S.C. § 103 in view by U.S. Pat. 6,413,382 to Wang ("Wang") and U.S. Pat. 6,413,382 to Lantsman ("Lantsman")?

Simultaneous with submission of this Notice of Appeal to the Director of the

United States Patent and Trademark Office, this Notice of Appeal is being filed with the Patent Trial and Appeal Board. In addition, this Notice of Appeal, along with the required docketing fees, is being filed with the United States Court of Appeals for the Federal Circuit.

Respectfully submitted,

Dated: November 19, 2015

/Tarek N. Fahmi/
Tarek N. Fahmi, Reg. No. 41,402

ASCENDA LAW GROUP, PC
333 W. San Carlos St., Suite 200
San Jose, CA 95110
Tel: 866-877-4883
Email: tarek.fahmi@ascendalaw.com

APPENDIX A

Trials@uspto.gov
571-272-7822

Paper 38
Entered: September 23, 2015

UNITED STATES PATENT AND TRADEMARK OFFICE

BEFORE THE PATENT TRIAL AND APPEAL BOARD

GLOBALFOUNDRIES U.S., INC., GLOBALFOUNDRIES DRESDEN MODULE ONE LLC & CO. KG, GLOBALFOUNDRIES DRESDEN MODULE TWO LLC & CO. KG, and THE GILLETTE COMPANY,
Petitioner,

v.

ZOND, LLC,
Patent Owner.

Case IPR2014-01100[1]
Patent 7,604,716 B2

Before KEVIN F. TURNER, DEBRA K. STEPHENS, JONI Y. CHANG, SUSAN L. C. MITCHELL, and JENNIFER MEYER CHAGNON, *Administrative Patent Judges*.

CHAGNON, Administrative Patent Judge.

FINAL WRITTEN DECISION
35 U.S.C. § 318(a) and 37 C.F.R. § 42.73

[1] Case IPR2014-00973 has been joined with the instant proceeding.

I. INTRODUCTION

We have jurisdiction to hear this *inter partes* review under 35 U.S.C. § 6(c). This Final Written Decision is issued pursuant to 35 U.S.C. § 318(a) and 37 C.F.R. § 42.73. For the reasons discussed herein, we determine that Petitioner has shown by a preponderance of the evidence that claims 12 and 13 of U.S. Patent No. 7,604,716 B2 (Ex. 1101, "the '716 patent") are unpatentable.

A. Procedural History

GLOBALFOUNDRIES U.S., Inc., GLOBALFOUNDRIES Dresden Module One LLC & Co. KG, and GLOBALFOUNDRIES Dresden Module Two LLC & Co. KG (collectively, "GlobalFoundries") filed a Petition (Paper 2, "Pet.") seeking *inter partes* review of claims 12 and 13 ("the challenged claims") of the '716 patent. GlobalFoundries included a Declaration of Uwe Kortshagen, Ph.D. (Ex. 1102) to support its positions. Zond ("Patent Owner") filed a Preliminary Response (Paper 7, "Prelim. Resp."). Pursuant to 35 U.S.C. § 314(a), on October 14, 2014, we instituted an *inter partes* review of the challenged claims to determine if the claims are unpatentable under 35 U.S.C. § 103 as obvious over the combination of Wang[2] and Lantsman.[3] Paper 9 ("Inst. Dec.").

Subsequent to institution, we granted a revised Motion for Joinder filed by The Gillette Company ("Gillette"), joining Case IPR2014-00973

---

[2] U.S. Patent No. 6,413,382 B1, issued July 2, 2002 (Ex. 1104).
[3] U.S. Patent No. 6,190,512 B1, issued Feb. 20, 2001 (Ex. 1105).

with the instant trial (Paper 12).[4] Patent Owner filed a Patent Owner Response (Paper 24, "PO Resp."), along with a Declaration of Larry D. Hartsough, Ph.D. (Ex. 2004) to support its positions. Petitioner filed a Reply (Paper 30, "Reply") to the Patent Owner Response, along with a supplemental Declaration of Dr. Kortshagen (Ex. 1120). An oral hearing[5] was held on June 12, 2015. A transcript of the hearing is included in the record. Paper 37 ("Tr.").

B. Related Proceedings

The parties indicate that the '716 patent was asserted against Petitioner, as well as other defendants, in seven district court lawsuits pending in the District of Massachusetts. Pet. 1; Paper 5; Ex. 1118.

C. The '716 Patent

The '716 patent relates to a method and apparatus for generating a strongly-ionized plasma, for use in various plasma processes. Ex. 1101, Abstract, 7:30–47. For example, at the time of the invention, plasma sputtering was a widely used technique for depositing films on substrates. *Id.* at 1:24–25. As discussed in the '716 patent, prior art magnetron sputtering systems deposited films having low uniformity and poor target utilization (the target material erodes in a non-uniform manner). *Id.* at 3:20–33. The '716 patent discloses that increasing the power applied to the

---

[4] We refer to GlobalFoundries and Gillette, collectively, as "Petitioner" throughout this Decision.

[5] The oral hearings for IPR2014-00807, IPR2014-00808, IPR2014-00818, IPR2014-00819, IPR2014-00821, IPR2014-00827, IPR2014-01098, IPR2014-01099, and IPR2014-01100 were consolidated.

plasma, in an attempt to increase the plasma uniformity and density, can also "increase the probability of generating an electrical breakdown condition leading to an undesirable electrical discharge (an electrical arc) in the chamber." *Id.* at 3:34–40.

The '716 patent further discloses that using pulsed DC power can reduce the probability of establishing such an electrical breakdown condition, but that large power pulses still can result in undesirable electrical discharges. *Id.* at 3:42–52. According to the '716 patent, however, first forming a weakly-ionized plasma "substantially eliminates the probability of establishing a breakdown condition in the chamber when high-power pulses are applied between the cathode . . . and the anode." *Id.* at 6:16–19. The "probability of establishing a breakdown condition is substantially eliminated because the weakly-ionized plasma . . . has a low-level of ionization that provides electrical conductivity through the plasma. This conductivity substantially prevents the setup of a breakdown condition, even when high power is applied to the plasma." *Id.* at 6:20–25.

D. Challenged Claims

Each of challenged claims 12 and 13 depends, directly or indirectly, from claim 1, which is not challenged in the present Petition. Claims 1, 12, and 13 are reproduced as follows:

> 1. An apparatus for generating a strongly-ionized plasma, the apparatus comprising:
>
> a. an ionization source that generates a weakly-ionized plasma from a feed gas contained in a chamber, the weakly-ionized plasma substantially eliminating the probability

> of developing an electrical breakdown condition in the chamber; and
>
> b. a power supply that supplies power to the weakly-ionized plasma th[r]ough an electrical pulse that is applied across the weakly-ionized plasma, the electrical pulse having at least one of a magnitude and a rise-time that is sufficient to transform the weakly-ionized plasma to a strongly-ionized plasma without developing an electrical breakdown condition in the chamber.

Ex. 1101, 20:14–27.

> 12. The apparatus of claim 1 further comprising a gas line that is coupled to the chamber, the gas line supplying feed gas to the strongly-ionized plasma that transports the strongly-ionized plasma by a rapid volume exchange.

Id. at 20:61–64.

> 13. The apparatus of claim 12 wherein the gas volume exchange permits additional power to be absorbed by the strongly-ionized plasma.

Id. at 20:65–67.

II. ANALYSIS

A. Claim Construction

In an *inter partes* review, claim terms in an unexpired patent are given their broadest reasonable construction in light of the specification of the patent in which they appear. 37 C.F.R. § 42.100(b); *see In re Cuozzo Speed Techs., LLC*, 793 F.3d 1268, 1275–79 (Fed. Cir. 2015). Claim terms generally are given their ordinary and customary meaning as would be understood by one of ordinary skill in the art in the context of the entire disclosure. *In re Translogic Tech., Inc.*, 504 F.3d 1249, 1257 (Fed. Cir.

2007). Significantly, claims are not interpreted in a vacuum but are part of, and read in light of, the specification. *United States v. Adams*, 383 U.S. 39, 49 (1966) ("[I]t is fundamental that claims are to be construed in the light of the specifications and both are to be read with a view to ascertaining the invention.") (citations omitted).

An inventor may provide a special definition of the term in the specification, as long as this is done so "with reasonable clarity, deliberateness, and precision." *In re Paulsen*, 30 F.3d 1475, 1480 (Fed. Cir. 1994). In the absence of such a definition, however, limitations are not to be read from the specification into the claims. *In re Van Geuns*, 988 F.2d 1181, 1184 (Fed. Cir. 1993).

Claim Terms

"weakly-ionized plasma" and "strongly-ionized plasma"

Independent claim 1 recites supplying an electrical pulse to "transform [a] weakly-ionized plasma to a strongly-ionized plasma." Ex. 1101, 20:25–27, 22:48–50. Prior to institution, the parties submitted proposed constructions for the claim terms "a weakly-ionized plasma" and "a strongly-ionized plasma." Pet. 12–13; Prelim. Resp. 12–13. In our Institution Decision, we adopted Patent Owner's proposed constructions, in light of the Specification, as the broadest reasonable interpretations. Inst. Dec. 6–8; *see, e.g.*, Ex. 1101, 6:22–24 ("the weakly-ionized plasma 232 has a low-level of ionization"), 7:16–18 ("high-power pulses generate a highly-ionized or a strongly-ionized plasma 238 from the weakly-ionized plasma 232").

Subsequent to institution, notwithstanding that neither Patent Owner, nor its expert witness, expressly challenged our claim constructions as to these terms (*see, e.g.*, Ex. 2004 ¶ 21), Patent Owner improperly attempts to import extraneous limitations into the claim by arguing that a specific magnitude for the peak density of ions is required to disclose a strongly-ionized plasma, i.e., "equal to or greater than 10^{12} [cm^{-3}]" (PO Resp. 3–4, 26–27). It is well settled that if a feature is not necessary to give meaning to a claim term, it would be "extraneous" and should not be read into the claim. *Renishaw PLC v. Marposs Societa' per Azioni*, 158 F.3d 1243, 1249 (Fed. Cir. 1998); *E.I. du Pont de Nemours & Co. v. Phillips Petroleum Co.*, 849 F.2d 1430, 1433 (Fed. Cir. 1988).

Patent Owner relies only on testimony from Petitioner's declarant, Dr. Kortshagen, to support this construction requiring a specific magnitude for the peak density of ions. PO Resp. 3 (citing IPR2014-00818, Ex. 2010, 44:13–58:12). Patent Owner, however, does not direct us to where the Specification provides an explicit definition for this claim term, nor do we discern one. *See Paulsen*, 30 F.3d at 1480. Moreover, Patent Owner's newly proposed construction, requiring a specific ion density range, would render at least the limitation recited in dependent claim 24 superfluous. Ex. 1101, 21:45–47 (Claim 24 states "[t]he method of claim 14 wherein the peak plasma density of the strongly-ionized plasma is greater than about 10^{12} cm^{-3}."). It is well settled that "claims are interpreted with an eye toward giving effect to all terms in the claim." *Bicon, Inc. v. Straumann Co.*, 441 F.3d 945, 950 (Fed. Cir. 2006); *see also Stumbo v. Eastman Outdoors*,

Inc., 508 F.3d 1358, 1362 (Fed. Cir. 2007) (denouncing claim constructions which render phrases in claims superfluous). Further, "[i]t is improper for courts to read into an independent claim a limitation explicitly set forth in another claim." *Envtl. Designs, Ltd. v. Union Oil Co. of Cal.*, 713 F.2d 698, 699 (Fed. Cir. 1983).

For the foregoing reasons, we decline to adopt Patent Owner's newly proposed construction that requires a specific ion density. Rather, upon consideration of the parties' explanations and supporting evidence before us, we discern no reason to change our claim constructions set forth in the Institution Decision with respect to these claim terms, which adopted Patent Owner's originally proposed constructions. Inst. Dec. 8. Therefore, we construe, in light of the Specification, the claim term "a weakly-ionized plasma" as "a plasma with a relatively low peak density of ions," and the claim term "a strongly-ionized plasma" as "a plasma with a relatively high peak density of ions."

"weakly-ionized plasma substantially eliminating the probability of developing an electrical breakdown condition in the chamber"

Claim 1 recites generating a weakly-ionized plasma, "the weakly-ionized plasma *substantially eliminating the probability of developing an electrical breakdown condition* in the chamber." Ex. 1101, 20:16–20 (emphasis added). During the pre-trial stage of this proceeding, Patent Owner argued that this claim term requires the weakly-ionized plasma be

> plasma having a level of ionization that is low enough and sufficiently conductive to substantially eliminate the setup of a

> breakdown condition *when the plasma is formed* **and** *when an electrical pulse is applied across the plasma to thereby generate a strongly ionized plasma*.

Prelim. Resp. 14–16 (emphasis added). In our Institution Decision, we construed this claim term as "weakly-ionized plasma that substantially eliminates the probability of developing a breakdown condition when an electrical pulse is applied across the plasma thereby to generate a strongly-ionized plasma." Inst. Dec. 8–10.

Subsequent to institution, notwithstanding that neither Patent Owner, nor its expert witness, expressly challenged our construction as to this term (*see, e.g.*, Ex. 2004 ¶ 22), Patent Owner again improperly attempts to import extraneous limitations into the claim by arguing repeatedly that the claims require that arcing[6] is avoided, *even on plasma initiation*. *See, e.g.*, PO Resp. 2–3, 21, 26. Patent Owner's interpretation, however, is not consistent with the language of the claims, or the Specification. The Specification of the '716 patent describes the weakly-ionized plasma only as substantially eliminating the setup of a breakdown condition *when the high-power pulses are applied across the weakly-ionized plasma* to generate a strongly-ionized plasma; the Specification does not support Patent Owner's assertion that the setup of a breakdown condition be substantially eliminated *when the weakly-ionized plasma itself is formed*. *See, e.g.*, Ex. 1101, 6:16–25 ("Forming the weakly-ionized or pre-ionized plasma . . . substantially eliminates the

[6] Patent Owner often uses the term "arcing" when discussing the claim term "electrical breakdown condition." *See, e.g.*, PO Resp. 1–3, 21, 24–27.

probability of establishing a breakdown condition in the chamber *when high-power pulses are applied between the cathode . . . and the anode*.") (emphasis added); *id*. at 11:39–47, 12:65–13:4, 16:59–63, 17:48–54; *see also id.* at 5:41–46 ("[A] direct current (DC) power supply . . . is used in an ionization source to generate and maintain the weakly-ionized . . . plasma . . . . In this embodiment, the DC power supply is adapted to generate a voltage that is large enough *to ignite the weakly-ionized plasma*.") (emphasis added); *id.* at 11:51–54 ("[T]he power from the pulsed power supply . . . is continuously applied *after the weakly-ionized plasma . . . is ignited* in order to maintain the weakly-ionized plasma . . . .") (emphasis added). The additional claim language of claim 1, which recites "transform[ing] the weakly-ionized plasma to a strongly-ionized plasma without developing an electrical breakdown condition in the chamber," also supports our claim construction set forth in the Institution Decision. Ex. 1101, 20:25–27, 22:48–50.

Upon consideration of the parties' explanations and supporting evidence, we discern no reason to change our claim construction set forth in the Institution Decision with respect to this term. Inst. Dec. 10. Therefore, we construe, in light of the Specification, the claim term "weakly-ionized plasma substantially eliminating the probability of developing an electrical breakdown condition in the chamber" as "weakly-ionized plasma that substantially eliminates the probability of developing a breakdown condition when an electrical pulse is applied across the plasma thereby to generate a strongly-ionized plasma."

"without developing an electrical breakdown condition"

Claim 1 recites "transform[ing] the weakly-ionized plasma to a strongly-ionized plasma *without developing an electrical breakdown condition in the chamber*." Ex. 1101, 20:25–27, 22:48–50 (emphasis added). Neither the Specification nor the original disclosure of the '716 patent recites the claim term "without developing an electrical breakdown condition in the chamber." Rather, they disclose a process that *reduces or substantially eliminates the possibility of* developing an electrical breakdown condition in the chamber.

For instance, the Specification of the '716 patent discloses:

> Forming the weakly-ionized or pre-ionized plasma 232 *substantially eliminates the probability* of establishing a breakdown condition in the chamber when high-power pulses are applied between the cathode 204 and the anode 216. The *probability of establishing a breakdown condition is substantially eliminated* because the weakly-ionized plasma 232 has a low-level of ionization that provides electrical conductivity through the plasma. This conductivity *substantially prevents the setup of a breakdown condition*, even when high power is applied to the plasma.

Id. at 6:16–25 (emphases added).

> The partially ionized gas is also referred to as a weakly-ionized plasma or a pre-ionized plasma 232 (FIG. 2B). The formation of weakly-ionized plasma 232 *substantially eliminates the possibility of* creating a breakdown condition when high-power pulses are applied to the weakly-ionized plasma 232 as described herein.

Id. at 11:41–47 (emphasis added).

> As described herein, the formation of weakly-ionized plasma 232 *substantially eliminates the possibility of creating a breakdown condition* when high-power pulses are applied to the weakly-ionized plasma 232. The suppression of this breakdown condition *substantially eliminates the occurrence of undesirable arcing* between the anode 216 and the cathode 204.

Id. at 12:65–13:4 (emphases added).

In its Response, Patent Owner argues that "Wang . . . merely describes techniques for reducing, but not eliminating, electrical breakdown conditions" and "[t]he two are not the same." PO Resp. 1. Patent Owner's arguments, attempting to distinguish the claims from Wang, focus on this distinction—reducing versus eliminating. *See id.* at 1–4, 21, 24–26. Patent Owner, however, does not explain adequately why *one with ordinary skill in the plasma art* would have interpreted the claim term "without developing an electrical breakdown condition," *in light of the Specification*, to require the transformation of the weakly-ionized plasma to a strongly-ionized plasma with a guarantee of eliminating *all possibility* of arcing. *See In re NTP, Inc.*, 654 F.3d 1279, 1288 (Fed. Cir. 2011) (stating that the Board's claim construction "cannot be divorced from the specification and the record evidence"); *see also In re Cortright*, 165 F.3d 1353, 1358 (Fed. Cir. 1999) (stating that the Board's claim construction "must be consistent with the one that those skilled in the art would reach").

One with ordinary skill in the art would have recognized that electrical arcing in a real-world plasma sputtering apparatus occurs naturally under certain processing conditions. In this regard, Dr. Kortshagen testifies that

> *[t]he probability of arcing can never be completely eliminated in a realistic sputtering system application.* This stems from arcs being the potential result of stochastic electron density fluctuations that may trigger an instability feedback mechanism capable of creating a short circuit. Such density fluctuations can result from the inherent stochastic motion of electrons, but also from external factors such as cathode and anode erosion over time or the flaking of deposited films from the chamber walls, which all can lead to local enhancements of the electric field. *Because of the unpredictable nature of such events, there is always a chance that a local electron density fluctuation can become sufficiently high to create a short circuit and result in an arc discharge*.

Ex. 1120 ¶ 76 (emphases added). During his cross-examination, Dr. Hartsough also recognized that "[o]ne can't say that an arc would never occur . . . ." Ex. 1123, 188:14–189:3. We credit this testimony of Dr. Kortshagen and Dr. Hartsough as it is consistent with the Specification of the '716 patent. Ex. 1101, 6:16–25, 11:41–47, 12:65–13:4.

It is well settled that "[a] claim construction that excludes the preferred embodiment is rarely, if ever, correct and would require highly persuasive evidentiary support." *Adams Respiratory Therapeutics, Inc. v. Perrigo Co.*, 616 F.3d 1283, 1290 (Fed. Cir. 2010) (internal quotations omitted). A construction that excludes all disclosed embodiments, as urged by Patent Owner here, is especially disfavored. *MBO Labs., Inc. v. Becton, Dickinson & Co.*, 474 F.3d 1323, 1333 (Fed. Cir. 2007). In short, claim construction requires claim terms to be read so that they encompass the very preferred embodiment they describe. *On-Line Techs., Inc. v. Bodenseewerk Perkin-Elmer GmbH*, 386 F.3d 1133, 1138 (Fed. Cir. 2004).

Here, nothing in the Specification indicates that the possibility of arcing is *completely eliminated* when the weakly-ionized plasma is transformed to a strongly-ionized plasma. Rather, it explicitly states that "the formation of weakly-ionized plasma 232 *substantially eliminates* the possibility of creating a breakdown condition when high-power pulses are applied to the weakly-ionized plasma 232," and "[t]he suppression of this breakdown condition *substantially eliminates* the occurrence of undesirable arcing between the anode 216 and the cathode 204." Ex. 1101, 12:65–13:4 (emphases added).

Given the disclosure in the Specification and the consistent testimony of Dr. Kortshagen and Dr. Hartsough, we decline to construe the claims to require the transformation of the weakly-ionized plasma to a strongly-ionized plasma occur with a *guarantee* of eliminating *all possibility* of an electrical breakdown condition or arcing, because it would be unreasonable to exclude the disclosed embodiments, all of which stop short of such a guarantee. *See Phillips v. AWH Corp.*, 415 F.3d 1303, 1315 (Fed. Cir. 2005) (en banc) (stating that the Specification is "the single best guide to the meaning of a disputed term"). Instead, we construe the claim term "without developing an electrical breakdown condition in the chamber" as "substantially eliminating the possibility of developing an electrical breakdown condition in the chamber," consistent with an interpretation that one of ordinary skill in the art would reach when reading the claim term in the context of the Specification.

B. Principles of Law

To prevail in its challenges to the patentability of the claims, Petitioner must prove unpatentability by a preponderance of the evidence. 35 U.S.C. § 316(e); 37 C.F.R. § 42.1(d). A patent claim is unpatentable under 35 U.S.C. § 103 if the differences between the claimed subject matter and the prior art are such that the subject matter, as a whole, would have been obvious at the time the invention was made to a person having ordinary skill in the art to which said subject matter pertains. *KSR Int'l Co. v. Teleflex Inc*., 550 U.S. 398, 406 (2007). The question of obviousness is resolved on the basis of underlying factual determinations including: (1) the scope and content of the prior art; (2) any differences between the claimed subject matter and the prior art; (3) the level of ordinary skill in the art; and (4) objective evidence of nonobviousness. *Graham v. John Deere Co.*, 383 U.S. 1, 17–18 (1966).

In that regard, an obviousness analysis "need not seek out precise teachings directed to the specific subject matter of the challenged claim, for a court can take account of the inferences and creative steps that a person of ordinary skill in the art would employ." *KSR*, 550 U.S. at 418; *see Translogic*, 504 F.3d at 1259. A prima facie case of obviousness is established when the prior art itself would appear to have suggested the claimed subject matter to a person of ordinary skill in the art. *In re Rinehart*, 531 F.2d 1048, 1051 (CCPA 1976). The level of ordinary skill in the art is reflected by the prior art of record. *See Okajima v. Bourdeau*,

261 F.3d 1350, 1355 (Fed. Cir. 2001); *In re GPAC Inc.*, 57 F.3d 1573, 1579 (Fed. Cir. 1995); *In re Oelrich*, 579 F.2d 86, 91 (CCPA 1978).

We analyze the asserted ground of unpatentability in accordance with the above-stated principles.

C. Obviousness Over Wang and Lantsman

Petitioner asserts that each of the challenged claims is unpatentable under 35 U.S.C. § 103 as obvious over the combination of Wang and Lantsman. Pet. 32–44. Petitioner explains how each claim limitation is disclosed in or taught by the cited references, and provides an articulated reasoning with rational underpinning to support combining the prior art teachings. *Id.* Petitioner also relies on the Declarations of Dr. Kortshagen (Ex. 1102; Ex. 1120) to support its Petition and Reply. Patent Owner responds that the cited combination does not disclose every claim element (*see, e.g.*, PO Resp. 24–27), and asserts that there is insufficient reason to combine the technical disclosures of Wang and Lantsman (*id.* at 27–29), relying on the Declaration of Dr. Hartsough (Ex. 2004) to support its Response.

We have reviewed the entire record before us, including the parties' explanations and supporting evidence presented during this trial. We begin our discussion with a brief summary of Wang and Lantsman, and then we address the parties' contentions in turn.

<u>Wang</u>

Wang discloses a power pulsed magnetron sputtering method for generating a very high plasma density. Ex. 1104, Abstract. Wang also

discloses a sputtering method for depositing metal layers onto advanced semiconductor integrated circuit structures. *Id.* at 1:4–15.

Figure 1 of Wang, reproduced below, illustrates a cross-sectional view of a magnetron sputtering reactor:

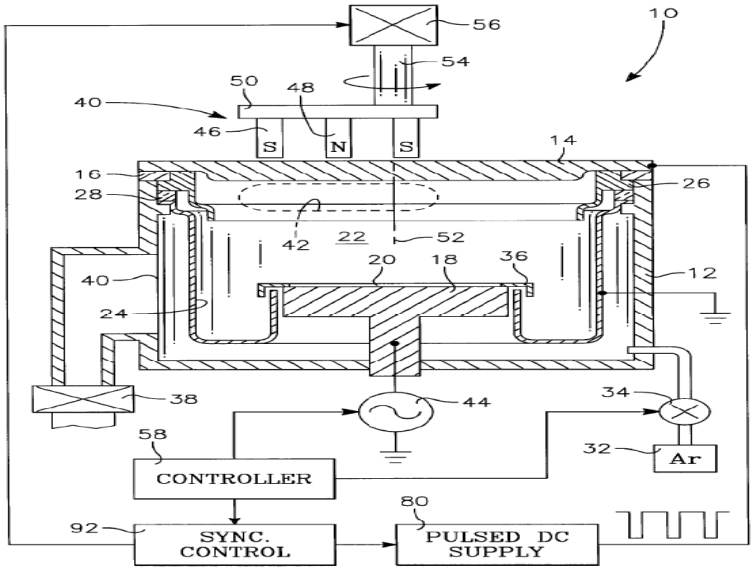

FIG. 1

As shown in Figure 1 of Wang, magnetron sputtering apparatus 10 has pedestal 18 for supporting semiconductor substrate 20, anode 24, cathode 14, magnet assembly 40, and pulsed DC power supply 80. Ex. 1104, 3:57–4:55. According to Wang, the apparatus creates high-density plasma in region 42, which ionizes a substantial fraction of the sputtered particles into positively charged metal ions and also increases the sputtering rate. *Id.* at 4:13–34. Magnet assembly 40 creates a magnetic field near target 14, which traps electrons from the plasma to increase the electron density. *Id.* at 4:23–27. Wang further recognizes that, if a large portion of the sputtered particles

are ionized, the films are deposited more uniformly and effectively. *Id.* at 1:24–29.

Figure 6 of Wang, reproduced below, illustrates how the apparatus applies a pulsed power to the plasma:

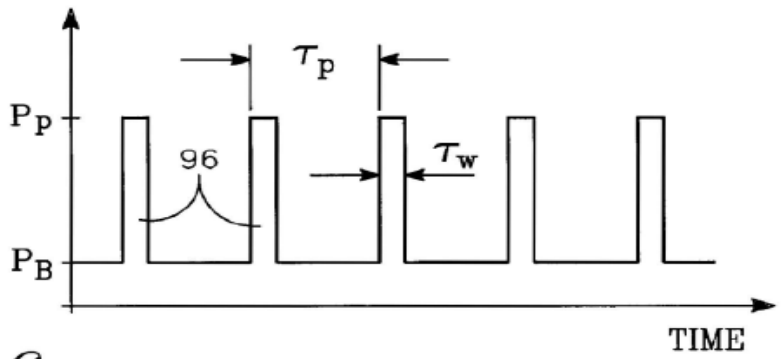

FIG. 6

As shown in Figure 6 of Wang, the target is maintained at background power level P_B between high power pulses 96 with peak power level P_P. Ex. 1104, 7:13–39. Background power level P_B exceeds the minimum power necessary to support a plasma in the chamber at the operational pressure (e.g., 1 kW). *Id.* Peak power P_P is at least 10 times (preferably 100 or 1000 times) background power level P_B. *Id.* The application of high peak power P_P causes the existing plasma to spread quickly, and increases the density of the plasma. *Id.* According to Dr. Kortshagen, Wang's apparatus generates a low-density (weakly-ionized) plasma during the application of background power P_B, and a high-density plasma during the application of peak power P_P. Ex. 1102 ¶ 90; *see* Pet. 32. In Wang, background power P_B may be generated by DC power supply 100 and peak power P_P may be

generated by pulsed power supply 80. Ex. 1104, 7:56–64, Fig. 7; Ex. 1102 ¶ 44.

Lantsman

Lantsman discloses a plasma ignition system for plasma processing chambers having primary and secondary power supplies, used to generate a plasma current and a process initiation voltage, respectively. Ex. 1105, Abstract. The primary power supply provides the power to drive electrically the cathode during the plasma process, and the secondary power supply supplies an initial plasma ignition voltage to "pre-ignite" the plasma. *Id.*

According to Lantsman, "arcing which can be produced by overvoltages can cause local overheating of the target, leading to evaporation or flaking of target material into the processing chamber and causing substrate particle contamination and device damage," and "[t]hus, it is advantageous to avoid voltage spikes during processing wherever possible." *Id.* at 1:51–59. The plasma "pre-ignition" allows the system to smoothly transition to final plasma development and deposition without voltage spikes, when the primary power supply is applied. *Id.* at 2:48–51.

In Lantsman, "at the beginning of processing . . . gas is introduced into the chamber" and "[w]hen the plasma process is completed, the gas flow is stopped." *Id.* at 3:10–13. This is illustrated in Figure 6 of Lantsman reproduced below:

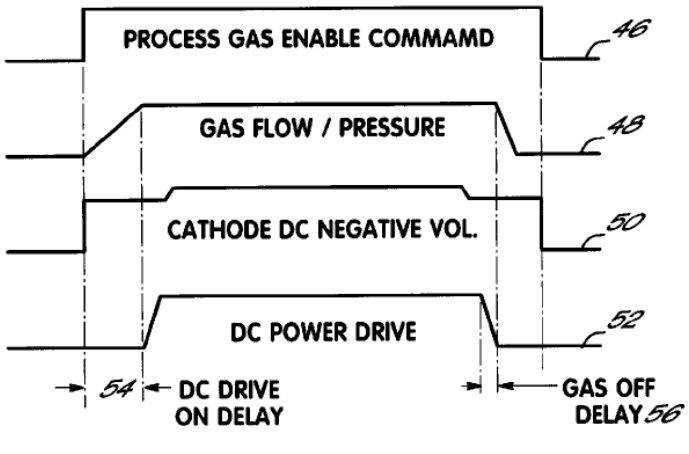

FIG. 6

Figure 6 illustrates a timing diagram for operation of the Lantsman apparatus. *Id.* at 3:35–36. As shown, gas flow is initiated, and the gas flow and pressure ramp upwards toward normal processing levels for the processing stage. *Id.* at 5:39–42. As also shown, gas continues flowing during the entire processing stage. *Id.* at 5:30–58.

Independent Claim 1

Petitioner explains how each limitation of claim 1 is disclosed in Wang. Pet. 32–39. Petitioner contends that DC power supply 100 of Wang discloses the claimed ionization source, which supplies background power P_B that generates a weakly-ionized plasma from a gas, such as an argon feed gas. *Id.* at 33–35; Ex. 1104, 7:56–61, 4:5–8, Figs. 6, 7. Petitioner further contends that pulsed DC power supply 80 of Wang discloses the claimed power supply, which supplies pulses (high power pulses P_P) to the weakly-ionized plasma, to generate a strongly-ionized plasma. Pet. 36–38; Ex. 1104, 7:19–30, 7:61–62, Figs. 6, 7.

With respect to the independent claim, the parties' dispute mainly centers on: (1) whether Wang discloses the "transform[ing] . . . without developing an electrical breakdown condition" limitation; and (2) whether Wang discloses the claimed "electrical pulse." We address each of these issues in turn.

Transforming a weakly-ionized plasma to a strongly-ionized plasma without developing an electrical breakdown condition

Petitioner asserts that Wang discloses "transform[ing a] weakly-ionized plasma to a strongly-ionized plasma without developing an electrical breakdown condition," as recited in claim 1. Pet. 35–36, 38–39. According to Petitioner, "Wang teaches that maintaining the weakly-ionized plasma between the pulses reduces arcing, or breakdown conditions." *Id.* at 42 (citing Ex. 1104, 7:3–49; Ex. 1102 ¶ 96). An annotated version of Figure 6 of Wang is reproduced below (annotations by Petitioner, Pet. 11):

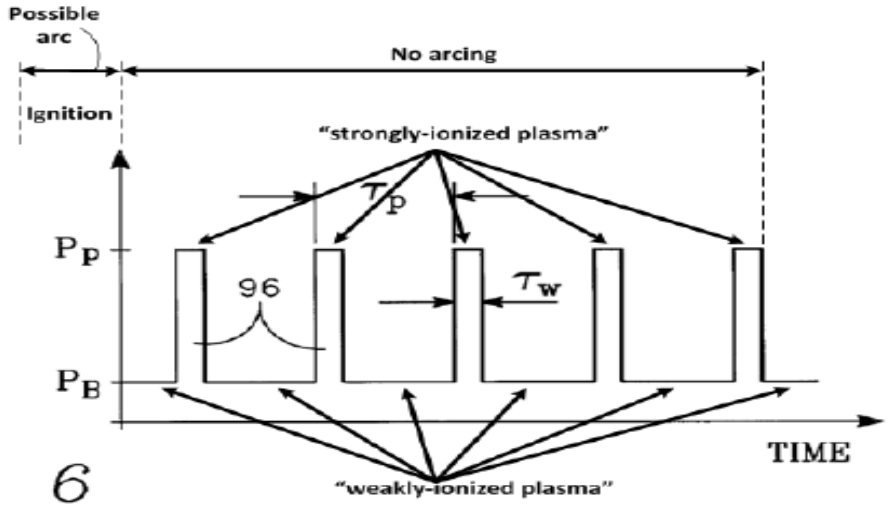

FIG. 6

As shown in annotated Figure 6, the target is maintained at background power level P_B between power pulses 96, rising to peak power level P_P.

Ex. 1104, 7:13–25. Background level P_B is chosen to exceed the minimum power necessary to support a plasma with little, if any, actual sputter deposition. *Id.* The initial plasma ignition needs to be performed only once, and at a very low power level so that particulates produced by arcing are much reduced. *Id.* at 7:26–55. According to Dr. Kortshagen, because "the plasma need not be reignited thereafter, arcing will not occur during subsequent applications of the background and peak power levels, P_B and P_P." Ex. 1102 ¶ 97; *see also* Ex. 1104, 7:25–28 ("As a result, once the plasma has been ignited at the beginning of sputtering prior to the illustrated waveform [Fig. 6], no more plasma ignition occurs.").

In its Response, Patent Owner argues that Wang does not disclose eliminating arcing. PO Resp. 1, 17–21, 24–27. In this regard, Patent Owner draws a distinction between *reducing* electrical breakdown conditions and *eliminating* electrical breakdown conditions. *Id.* Patent Owner argues that "arcing is still possible when a pulse is applied across a pre-existing plasma, particularly when there is a large, abrupt increase in the electric field as would occur upon the sudden application of a power pulse, such as in the transition Wang's P_B to P_P." *Id.* at 21 (citing Ex. 2004 ¶ 65). To support Patent Owner's contention, Dr. Hartsough testifies "Wang views arcing as a problem that can be improved, but not eliminated, by having the plasma maintained with a background fixed power. Note that even this does not stop the plasma from arcing, but merely reduces arcing." Ex. 2004 ¶ 64. Dr. Hartsough continues, "Wang's use of pre-ionization did not eliminate

arcing for his power pulses, it only reduced the likelihood of the same." *Id.* ¶ 65.

Based on the evidence before us, we are not persuaded by Patent Owner's arguments and expert testimony. As noted in our claim construction above, we do not construe claim 1 to require a guarantee of eliminating *all possibility* of an electrical breakdown condition or arcing. Wang discloses that the on-and-off pulsing in the first embodiment (shown in Figure 4), where arcing admittedly occurs, can be improved further by maintaining a background power level P_B between pulses to avoid arcing, as illustrated by Wang's second embodiment in Figure 6. *See* Ex. 1104, 7:1–8:14. Notably, Wang recognizes that, in the first embodiment (shown in Figure 4), because the plasma is ignited with a high power pulse in each pulse cycle, the chamber impedance dramatically changes between the on-and-off phases, and large particles are dislodged from the target or chamber. *Id*. at 5:28–32, 7:1–13. By contrast, in Wang's second embodiment (as shown in Figure 6), the plasma is ignited only once at a much lower power level P_B. *Id*. at 7:47–55. Because the weakly-ionized plasma exists in the chamber after ignition, the "chamber impedance changes relatively little between the two power levels P_B, P_P," and "particulates produced by arcing are much reduced." *Id*.

Dr. Kortshagen testifies that

> Wang's disclosure of the impedance changing relatively little between the two power levels indicates to a person of ordinary skill in the art that no arcing occurs when the high-power pulse P_P is applied to the weakly-ionized plasma (maintained by P_B),

> since any arcing would cause a drastic change in chamber impedance as the plasma current short circuits.

Ex. 1120 ¶ 75; *see* Reply 2–3. Given the prior art disclosures and the evidence before us, we credit Dr. Kortshagen's testimony (Ex. 1102 ¶¶ 98–105; Ex. 1120 ¶¶ 74–79). Further still, the power supply operation parameters disclosed in Wang, fall within the broad ranges disclosed in the '716 patent. *See* Ex. 1120 ¶¶ 29–30, Fig. 3; *compare* Ex. 1101, 6:55–64, Fig. 4, *with* Ex. 1104, 7:13–25, 5:66–65, Fig. 6. We, thus, agree with Dr. Kortshagen that one of ordinary skill in the art would recognize the embodiment of Figure 6 of Wang discloses "how to create a strongly-ionized plasma (through application of P_P pulses) from a weakly-ionized plasma (maintained by P_B) without forming an arc." Ex. 1120 ¶ 75; *see id.* ¶ 79.

Patent Owner also attempts to distinguish this limitation of claims 1 and 33 based on several arguments that import extraneous limitations into the claims. For example, Patent Owner argues that the embodiment of Figure 6 of Wang "does not solve the problem of arcing *during plasma initiation*. Instead, Wang merely proposes reducing the amount of arcing by keeping the plasma maintained so as not to require re-ignition with each pulse." PO Resp. 2–3 (citing Ex. 2004 ¶ 64) (emphasis added). Patent Owner additionally argues that because Wang does not disclose a magnitude for the peak density of ions, Wang does not teach a strongly-ionized plasma at all. *Id.* at 4 (citing IPR2014-00818, Ex. 2010, 212:20–22, 216:2–217:21, 154:23–155:15). The claims, however, do not require either of these limitations. *See supra* Section II.A. As discussed in our claim construction

above, the claims do not require "no arcing," or "no electrical breakdown condition," at ignition. *See* Reply 2 ("Wang's discussion of arcing during plasma ignition is irrelevant to whether arcing occurs when Wang energizes its weakly-ionized plasma into a strongly-ionized plasma."). There also is no requirement in the claims that the strongly-ionized plasma have a particular magnitude.

Given the evidence before us in the entire record, we determine that Petitioner has demonstrated, by a preponderance of evidence, that Wang discloses "transform[ing a] weakly-ionized plasma to a strongly-ionized plasma without developing an electrical breakdown condition," as recited in claim 1.

Electrical pulse

Petitioner asserts that Wang discloses an "electrical pulse having at least one of a magnitude and a rise-time that is sufficient to transform the weakly-ionized plasma to a strongly-ionized plasma without developing an electrical breakdown condition in the chamber," as recited in claim 1. Pet. 36–39. According to Petitioner,

> pulsed DC supply 80 [of Wang] . . . generates a train of voltage pulses. . . . Application of these voltage pulses to Wang's cathode 14 and anode 24 produces Wang's peak power pulses, P_P, which are applied to Wang's weakly-ionized plasma . . . . When one of Wang's voltage pulses is applied, an electric field is produced between the cathode 14 and the grounded anode 24.

Id. at 36 (citing Ex. 1104, 7:61–62, Fig. 7; Ex. 1102 ¶ 98). Petitioner further asserts that "Wang generates . . . a high density plasma during application of the peak power P_P." *Id.* at 32 (citing Ex. 1102 ¶ 90); *see also* Ex. 1104,

7:29–31 ("[T]he application of the high peak power P_P . . . quickly causes the already existing [weakly-ionized] plasma to spread and increases the density of the plasma."). According to Petitioner, "[t]he electrical pulses disclosed in Wang . . . have both a magnitude and a rise time" and are applied to the weakly-ionized plasma. Pet. 37 (citing Ex. 1104, 5:23–27; Ex. 1102 ¶ 99).

In its Response, Patent Owner argues that Wang "fails to teach or suggest controlling *voltage* during [sputtering material from a target] or when generating a high-density plasma." PO Resp. 1; *see id.* at 17–21. Patent Owner further argues that Wang "discloses a very different approach to achieving a high density plasma." *Id.* at 2 (citing Ex. 2004 ¶ 60); *see* Ex. 2004 ¶ 60 (Dr. Hartsough testifies: "Wang does not *control voltage* (or the resulting electric field) rise time for any purpose, and certainly not for the purpose of achieving an increase in ionization rate.") (emphasis added). These arguments are not commensurate with the scope of the challenged claims, none of which recite a *voltage* pulse, let alone *controlling* such a pulse, as asserted by Patent Owner. *See In re Self*, 671 F.2d 1344, 1348 (CCPA 1982) (stating that limitations not appearing in the claims cannot be relied upon for patentability). Although Patent Owner argues that Wang does not disclose a voltage pulse, the claims recite only an "electrical pulse"; as admitted by Dr. Hartsough, both power pulses and voltage pulses are electrical pulses. *See* Reply 6 (citing Ex. 1122, 43:11–15). In any case, Petitioner relies on "pulsed DC supply 80 [of Wang] that generates a train of

voltage pulses" as disclosing the claimed "electrical pulse." Pet. 36 (citing Ex. 1104, 7:61–62, Fig. 7) (emphasis added).

As to the result that the claimed "electrical pulse . . . *is sufficient to transform the weakly-ionized plasma to a strongly-ionized plasma*," Petitioner notes that Wang specifically discloses the peak power pulses P_P have a magnitude of 1 MW (Pet. 37 (citing Ex. 1104, 7:19–25; Ex. 1102 ¶ 100)) and a rise time (*id.* (citing Ex. 1104, 5:23–26; Ex. 1102 ¶ 101)). Petitioner asserts that "[b]ecause Wang's pulse produces a strongly-ionized plasma, the magnitude and rise time of the pulse 'is sufficient to transform the weakly-ionized plasma to a strongly-ionized plasma' as required by claim 1." *Id.* at 37–38 (quoting Ex. 1102 ¶ 102). Because claim 1 does not require any particular magnitude or rise time of the electrical pulse, we, thus, are persuaded that Wang discloses an electrical pulse "having at least one of a magnitude and a rise-time that is sufficient to transform the weakly-ionized plasma to a strongly-ionized plasma," as claimed.

As discussed in the "transforming" section above, we also are persuaded that Wang discloses an electrical pulse "transform[ing a] weakly-ionized plasma to a strongly-ionized plasma *without developing an electrical breakdown condition*."

Given the evidence before us in the entire record, we determine that Petitioner has demonstrated, by a preponderance of evidence, that Wang discloses an "electrical pulse having at least one of a magnitude and a rise-time that is sufficient to transform the weakly-ionized plasma to a

strongly-ionized plasma without developing an electrical breakdown condition in the chamber," as recited in claim 1.

For the reasons discussed, we determine that Petitioner has demonstrated, by a preponderance of evidence, that Wang discloses all features of claim 1.

Dependent Claims 12 and 13

Claim 12 depends from claim 1, and recites "a gas line that is coupled to the chamber, the gas line supplying feed gas to the strongly-ionized plasma that transports the strongly-ionized plasma by a rapid volume exchange." Ex. 1101, 20:61–64. Claim 13 depends from claim 12, and recites "wherein the gas volume exchange permits additional power to be absorbed by the strongly-ionized plasma." *Id.* at 20:65–67.

As noted by Petitioner, Wang discloses a feed gas supplied to the chamber with the strongly-ionized plasma. Ex. 1104, 4:5–6, 4:8–10, Fig. 1, s*ee* Pet. 40 (citing Ex. 1102 ¶ 107). Dr. Kortshagen testifies that "[o]ne of ordinary skill would understand that that Wang supplied the feed gas during the entirety of its processing." Ex. 1102 ¶ 108; *see* Pet. 40. Petitioner also argues that Lantsman explicitly discloses supplying the feed gas during the entirety of plasma processing, and that "it would have been obvious to one of ordinary skill to continue to exchange the feed gas during Wang's application of background power and high peak power, as taught by Lantsman." Pet. 41–42 (citing Ex. 1102 ¶¶ 109–111); *see* Ex. 1105, 3:9–13, 4:36–38.

According to Petitioner and its expert, "exchange of the feed gas into and out of Wang's chamber [during production of the strongly-ionized plasma] would have both transported the strongly-ionized plasma by a rapid volume exchange and allowed additional power from Wang's repeating voltage pulses to be absorbed by the strongly-ionized plasma," as required by claims 12 and 13. Pet. 41–42 (citing Ex. 1102 ¶ 109); *see* Pet. 42 n.17 (citing Ex. 1102 ¶ 107 n.16). On the record before us, we credit Dr. Kortshagen's testimony, as it is consistent with the prior art disclosures.

In response, Patent Owner does not contest that Lantsman teaches the additional features of claims 12 and 13, but merely argues that one of skill in the art would not combine Wang and Lantsman, and that Lantsman does not remedy the deficiencies of Wang as to claim 1.[7] PO Resp. 27–29. Given the evidence before us in the entire record, we determine that Petitioner has shown, by a preponderance of the evidence, that the combination of Wang and Lantsman teaches all of the limitations of claims 12 and 13.

We now turn to the question of whether one of ordinary skill in the art would have combined Wang and Lantsman. Petitioner asserts that one of ordinary skill in the art would have combined Wang and Lantsman because both are directed to sputtering using plasma, and more specifically, to systems that use two power supplies, one for pre-ionization and one for

---

[7] We have addressed the parties' arguments and evidence regarding the disclosure of Wang as applied to claim 1 above. Because we are persuaded that Wang discloses all features of claim 1, we need not address Patent Owner's assertions regarding Lantsman with respect to claim 1.

deposition. Pet. 43–44 (citing Ex. 1104, Fig. 7; Ex. 1105, 4:45–47; Ex. 1102 ¶ 112). Petitioner further asserts that "one of ordinary skill would have been motivated to use Lantsman's continuous gas flow in Wang so as to maintain a desired pressure in the chamber." *Id.* (citing Ex. 1102 ¶ 113).

In Response, Patent Owner argues that Lantsman "fails to disclose any pulsed power supply, electrical pulse, or strongly-ionized plasma" and that "[s]ystems that use a pulsed discharge supply unit, like those of Wang, would operate very differently if modified to use two DC power supplies, one of which supplies power for an entire deposition period, as taught by Lantsman." PO Resp. 27–28 (citing Ex. 2004 ¶ 100).

Those arguments are not persuasive. "It is well-established that a determination of obviousness based on teachings from multiple references does not require an actual, physical substitution of elements." *In re Mouttet*, 686 F.3d 1322, 1332 (Fed. Cir. 2012). A person with ordinary skill in the art is "a person of ordinary creativity, not an automaton," and "in many cases . . . will be able to fit the teachings of multiple patents together like pieces of a puzzle." *KSR*, 550 U.S. at 420–21. Petitioner relies on Lantsman only for the teaching of using a continuous flow of gas during application of Wang's background and peak power. Pet. 41–44; Ex. 1102 ¶¶ 109–111. Given the evidence before us in the entire record, we determine that Petitioner has set forth a sufficient articulated reasoning with rational underpinning to support combining these prior art teachings. *See KSR*, 550 U.S. at 418.

III. CONCLUSION

For the foregoing reasons, we determine that Petitioner has demonstrated, by a preponderance of the evidence, that claims 12 and 13 of the ’716 patent are unpatentable under 35 U.S.C. § 103 as obvious in view of the combination of Wang and Lantsman.

IV. ORDER

Accordingly, it is:

ORDERED that claims 12 and 13 of U.S. Patent No. 7,604,716 B2 are held *unpatentable*; and

FURTHER ORDERED that, because this is a Final Written Decision, parties to the proceeding seeking judicial review of the decision must comply with the notice and service requirements of 37 C.F.R. § 90.2.

For PATENT OWNER:

Tarek Fahmi
tarek.fahmi@ascendalaw.com

Gregory J. Gonsalves
gonsalves@gonsalveslawfirm.com

Bruce J. Barker
bbarker@chsblaw.com

For PETITIONER:

GlobalFoundries:

David Tennant
dtennant@whitecase.com

Dohm Chankong
dohm.chankong@whitecase.com

Gillette:

Michael A. Diener
michael.diener@wilmerhale.com

Larissa B. Park
larissa.park@wilmerhale.com

CERTIFICATE OF SERVICE

The undersigned hereby certifies that a copy of the foregoing

PATENT OWNER'S NOTICE OF APPEAL

was served on November 19, 2015, by filing this document though the Patent Review Processing System as well as delivering a copy via electronic mail directed to the attorneys of record for the Petitioner at the following address:

For Petitioner:
THE GILETTE COMPANY

David L. Cavanaugh, Reg. No. 36,476
Larissa Park, Reg. No. 59,051
Wilmer Cutler Pickering Hale and Dorr LLP
60 State Street
Boston, MA 02109

Email:
david.cavanaugh@wilmerhale.com;
larissa.park@wilmerhale.com

For Petitioner:
GLOBAL FOUNDRIES U.S., INC., GLOBALFOUNDRIES DRESDEN MODULE ONE LLC & CO. KG, GLOBALFOUNDRIES DRESDEN MODULE TWO LLC & CO. KG

David M. Tennant
Dohm Chankong
WHITE & CASE LLP
701 THIRTEENTH STREET, NW
WASHINGTON, DC 20005
dtennant@whitecase.com
dohm.chankong@whitecase.com

The parties have agreed to electronic service in this matter.

An additional copy was served on

Director of the United States Patent and Trademark Office
c/o Office of the General Counsel
Madison Building East, 1 OB20
600 Dulany Street
Alexandria, VA 22314-5793

As required under 37 C.F.R. § 90.2(a).

Respectfully submitted,

Date: November 19, 2015

by: */Tarek N. Fahmi/*
Tarek N. Fahmi, Reg. No. 41,402

Ascenda Law Group, PC
333 W. San Carlos St., Suite 200
San Jose, CA 95110
1 866 877 4883