UNITED STATES PATENT AND TRADEMARK OFFICE

BEFORE THE PATENT TRIAL AND APPEAL BOARD

FUJITSU SEMICONDUCTOR LIMITED,
FUJITSU SEMICONDUCTOR AMERICA, INC.,
ADVANCED MICRO DEVICES, INC., RENESAS ELECTRONICS CORPORATION, RENESAS ELECTRONICS AMERICA, INC., GLOBAL FOUNDRIES U.S., INC., GLOBALFOUNDRIES DRESDEN MODULE ONE LLC & CO. KG, GLOBALFOUNDRIES DRESDEN MODULE TWO LLC & CO. KG, TOSHIBA AMERICA ELECTRONIC COMPONENTS, INC., TOSHIBA AMERICA INC., TOSHIBA AMERICA INFORMATION SYSTEMS, INC., TOSHIBA CORPORATION, and
THE GILLETTE COMPANY

Petitioners

v.

ZOND, LLC
Patent Owner

Case No. IPR2014-00818[1]

Patent 6,853,142 B2

PATENT OWNER'S NOTICE OF APPEAL
35 U.S.C. § 142 & 37 C.F.R. § 90.2

---

[1] Cases IPR 2014-00866, IPR 2014-01012, and IPR 2014-01075 have been joined with the instant proceeding.

Pursuant to 37 C.F.R. § 90.2(a), Patent Owner, Zond, LLC, hereby provides notice of its appeal to the United States Court of Appeals for the Federal Circuit for review of the Final Written Decision of the United States Patent and Trademark Office ("USPTO") Patent Trial and Appeals Board ("PTAB") in *Inter Partes* Review 2014-00818, concerning U.S. Patent 6,853,142 ("the '142 patent"), entered on September 25, 2015, attached hereto as Appendix A.

ISSUES TO BE ADDRESSED ON APPEAL

A. Whether the PTAB erred in finding claims 1, 3-7, 9, 10, 12, 15, 19, 20, and 42 unpatentable as being obvious under 35 U.S.C. § 103 in view of U.S. Pat. 6,413,382 to Wang ("Wang") and U.S. Pat. 6,190,512 to Lantsman ("Lantsman")?

B. Whether the PTAB erred in finding claims 8, 17, and 18 unpatentable as being obvious under 35 U.S.C. § 103 in view of Wang, Lantsman, and D.V. Mozgrin, et al., *High-Current Low-Pressure Quasi-Stationary Discharge in a Magnetic Field: Experimental Research*, 21 PLASMA PHYSICS REPORTS 400–409 (1995) ("Mozgrin")?

Simultaneous with submission of this Notice of Appeal to the Director of the United States Patent and Trademark Office, this Notice of Appeal is being filed

with the Patent Trial and Appeal Board. In addition, this Notice of Appeal, along with the required docketing fees, is being filed with the United States Court of Appeals for the Federal Circuit.

Respectfully submitted,

Dated: November 23, 2015

/Tarek N. Fahmi/
Tarek N. Fahmi, Reg. No. 41,402

ASCENDA LAW GROUP, PC
333 W. San Carlos St., Suite 200
San Jose, CA 95110
Tel: 866-877-4883
Email: tarek.fahmi@ascendalaw.com

APPENDIX A

Trials@uspto.gov
571-272-7822

Paper 50
Entered: September 25, 2015

UNITED STATES PATENT AND TRADEMARK OFFICE

BEFORE THE PATENT TRIAL AND APPEAL BOARD

FUJITSU SEMICONDUCTOR LIMITED, FUJITSU SEMICONDUCTOR AMERICA, INC., ADVANCED MICRO DEVICES, INC., RENESAS ELECTRONICS CORPORATION, RENESAS ELECTRONICS AMERICA, INC., GLOBALFOUNDRIES U.S., INC., GLOBALFOUNDRIES DRESDEN MODULE ONE LLC & CO. KG, GLOBALFOUNDRIES DRESDEN MODULE TWO LLC & CO. KG, TOSHIBA AMERICA ELECTRONIC COMPONENTS, INC., TOSHIBA AMERICA INC., TOSHIBA AMERICA INFORMATION SYSTEMS, INC., TOSHIBA CORPORATION, and THE GILLETTE COMPANY
Petitioner,

v.

ZOND, LLC,
Patent Owner.

Case IPR2014-00818[1]
Patent 6,853,142 B2

Before KEVIN F. TURNER, DEBRA K. STEPHENS, JONI Y. CHANG, SUSAN L.C. MITCHELL, and JENNIFER MEYER CHAGNON, *Administrative Patent Judges*.

TURNER, *Administrative Patent Judge*.

FINAL WRITTEN DECISION
Inter Partes Review
35 U.S.C. § 318(a) and 37 C.F.R. § 42.73

[1] Cases IPR2014-00866, IPR2014-01012, and IPR2014-01075 have been joined with the instant *inter partes* review.

I. INTRODUCTION

Taiwan Semiconductor Manufacturing Company, Ltd. and TSMC North America Corporation (collectively, "TSMC") filed a Petition requesting an *inter partes* review of claims 1, 3–10, 12, 15, 17–20, and 42 of U.S. Patent No. 6,853,142 B2 (Ex. 1001, "the '142 Patent"). Paper 1 ("Pet."). Patent Owner Zond, LLC ("Zond") filed a Preliminary Response. Paper 8 ("Prelim. Resp."). We instituted the instant trial on October 20, 2014, pursuant to 35 U.S.C. § 314. Paper 9 ("Dec.").

Subsequent to institution, we granted the revised Motions for Joinder filed by other Petitioners (collectively, "GlobalFoundries") listed in the Caption above, joining Cases IPR2014-00866, IPR2014-01012, and IPR2014-01075 with the instant trial (Papers 12–14), and also granted a Joint Motion to Terminate with respect to TSMC (Paper 34). Zond filed a Response (Paper 26 ("PO Resp.")), and GlobalFoundries filed a Reply (Paper 42 ("Reply")). Oral hearing[2] was held on June 12, 2015, and a transcript of the hearing was entered into the record. Paper 49 ("Tr.").

We have jurisdiction under 35 U.S.C. § 6(c). This final written decision is entered pursuant to 35 U.S.C. § 318(a) and 37 C.F.R. § 42.73. For the reasons set forth below, we determine that GlobalFoundries has shown, by a preponderance of the evidence, that claims 1, 3–10, 12, 15, 17–20, and 42 of the '142 Patent are unpatentable under 35 U.S.C. § 103(a).

---

[2] The hearings for this review and the following *inter partes* reviews were consolidated: IPR2014-00807, IPR2014-00808, IPR2014-00819, IPR2014-00821, IPR2014-00827, IPR2014-01098, IPR2014-01099, and IPR2014-01100.

A. Related District Court Proceedings

The parties indicate that the ’142 Patent was asserted in numerous proceedings in Massachusetts: 1:13-cv-11570-RGS (*Zond v. Intel*); 1:13-cv-11577-DPW (*Zond v. AMD, Inc.*); 1:13-cv-11581-DJC (*Zond v. Toshiba Am. Elec. Comp. Inc.*); 1:13-cv-11591-RGS *(Zond v. SK Hynix, Inc.)*; 1:13-cv-11625-NMG (*Zond v. Renesas Elec. Corp*.); 1:13-cv-11634-WGY (*Zond v. Fujitsu*); and 1:13-cv-11567-DJC (*Zond v. The Gillette Co*.). Pet. 1; Paper 5.

B. The ’142 Patent

The ’142 Patent relates to methods and apparatus for generating high-density plasma. Ex. 1001, Abs. At the time of the invention, sputtering was a well-known technique for depositing films on semiconductor substrates. *Id*. at 1:16–24. The ’142 Patent indicates that prior art magnetron sputtering systems deposit films having low uniformity and poor target utilization (the target material erodes in a non-uniform manner). *Id*. at 3:32–36. To address these problems, the ’142 Patent discloses that increasing the power applied between the target and anode can increase the uniformity and density in the plasma. *Id*. at 3:37–44. However, increasing the power also “can increase the probability of generating an electrical breakdown condition leading to an undesirable electrical discharge (an electrical arc) in the chamber 104.” *Id*.

According to the ’142 Patent, forming a weakly-ionized plasma substantially eliminates the probability of establishing a breakdown condition in the chamber when high-power pulses are applied between the cathode and anode. *Id*. at 6:21–30. Once the weakly-ionized plasma is

formed, high-power pulses are applied between the cathode and anode to generate a strongly-ionized plasma from the weakly-ionized plasma. *Id*. at 7:23–36. The '142 Patent also discloses that the provision of the feed gas to the plasma allows for homogeneous diffusion of the feed gas in the weakly-ionized plasma and allows for the creation of a highly uniform strongly-ionized plasma. *Id*. at 6:31–35.

C. Illustrative Claim

Of the challenged claims, claims 1 and 10 are the only independent claims. Claims 3–9, 12, 15, 17–20, and 42 depend, directly or indirectly, from claims 1 or 10. Claim 1, reproduced below, is illustrative:

> 1. An apparatus for generating a strongly-ionized plasma in a chamber, the apparatus comprising:
>
> an ionization source that generates a weakly-ionized plasma from a feed gas, the weakly-ionized plasma reducing the probability of developing an electrical breakdown condition in the chamber;
>
> a power supply that supplies power to the weakly-ionized plasma though an electrical pulse applied across the weakly-ionized plasma, the electrical pulse having a magnitude and a rise-time that is sufficient to increase the density of the weakly-ionized plasma to generate a strongly-ionized plasma; and
>
> a gas line that supplies feed gas to the strongly-ionized plasma, *the feed gas diffusing the strongly-ionized plasma, thereby allowing additional power from the pulsed power supply to be absorbed by the strongly-ionized plasma*.

Ex. 1001, 20:35–52 (emphasis added).

D. Prior Art Relied Upon

Based on the instituted grounds, GlobalFoundries relies upon the following prior art references:

Lantsman	US 6,190,512	Feb. 20, 2001	(Ex. 1004)
Wang	US 6,413,382	July 2, 2002	(Ex. 1005)

D.V. Mozgrin, et al., *High-Current Low-Pressure Quasi-Stationary Discharge in a Magnetic Field: Experimental Research*, 21 PLASMA PHYSICS REPORTS 400–409 (1995) (Ex. 1003) (hereinafter "Mozgrin").

E. Grounds of Unpatentability

We instituted the instant trial based on the following grounds of unpatentability (Dec. 23):

Claim(s)	**Basis**	**References**
1, 3–7, 9, 10, 12, 15, 19, 20, and 42	§ 103(a)	Wang and Lantsman
8, 17, and 18	§ 103(a)	Wang, Lantsman, and Mozgrin

II. ANALYSIS

A. Claim Construction

In an *inter partes* review, claim terms in an unexpired patent are given their broadest reasonable construction in light of the specification of the patent in which they appear. 37 C.F.R. § 42.100(b); *see also In re Cuozzo Speed Techs., LLC*, 793 F.3d 1268, 1275–79 (Fed. Cir. 2015) ("Congress implicitly approved the broadest reasonable interpretation standard in

enacting the AIA,"[3] and "the standard was properly adopted by PTO regulation."). Significantly, claims are not interpreted in a vacuum but are part of, and read in light of, the specification. *United States v. Adams*, 383 U.S. 39, 49 (1966) ("[I]t is fundamental that claims are to be construed in the light of the specifications and both are to be read with a view to ascertaining the invention."). Claim terms are given their ordinary and customary meaning as would be understood by one of ordinary skill in the art in the context of the entire disclosure. *In re Translogic Tech., Inc.*, 504 F.3d 1249, 1257 (Fed. Cir. 2007). An inventor may rebut that presumption by providing a definition of the term in the specification with "reasonable clarity, deliberateness, and precision." *In re Paulsen*, 30 F.3d 1475, 1480 (Fed. Cir. 1994). In the absence of such a definition, limitations are not to be read from the specification into the claims. *In re Van Geuns*, 988 F.2d 1181, 1184 (Fed. Cir. 1993).

Claim 1 recites "the electrical pulse having a magnitude and a rise-time that is sufficient to increase the density of the weakly-ionized plasma to generate a strongly-ionized plasma," with claim 10 reciting a similar limitation. During the pre-trial stage of this proceeding, the parties also submitted their constructions for the claim terms "a weakly-ionized plasma" and "a strongly-ionized plasma." Pet. 13–14; Prelim. Resp. 20–22. In our Decision on Institution, we adopted Zond's proposed constructions, in light of the Specification, as the broadest reasonable interpretation. Dec. 6–7.

Upon review of the parties' explanations and supporting evidence before us, we discern no reason to modify our claim constructions set forth

[3] The Leahy-Smith America Invents Act, Pub. L. No. 112–29, 125 Stat. 284 (2011) ("AIA").

in the Decision on Institution with respect to these claim terms. *Id*. Therefore, for purposes of this Final Written Decision, we construe, in light of the Specification, the claim term "a weakly-ionized plasma" as "a plasma with a relatively low peak density of ions," the claim term "a strongly-ionized plasma" as "a plasma with a relatively high peak density of ions."

B. Principles of Law

A patent claim is unpatentable under 35 U.S.C. § 103(a) if the differences between the claimed subject matter and the prior art are such that the subject matter, as a whole, would have been obvious at the time the invention was made to a person having ordinary skill in the art to which said subject matter pertains. *KSR Int'l Co. v. Teleflex Inc*., 550 U.S. 398, 406 (2007). The question of obviousness is resolved on the basis of underlying factual determinations including: (1) the scope and content of the prior art; (2) any differences between the claimed subject matter and the prior art; (3) the level of ordinary skill in the art; and (4) objective evidence of nonobviousness. *Graham v. John Deere Co.*, 383 U.S. 1, 17–18 (1966). In that regard, an obviousness analysis "need not seek out precise teachings directed to the specific subject matter of the challenged claim, for a court can take account of the inferences and creative steps that a person of ordinary skill in the art would employ." *KSR*, 550 U.S. at 418; *Translogic*, 504 F.3d at 1259. The level of ordinary skill in the art is reflected by the prior art of record. *See Okajima v. Bourdeau*, 261 F.3d 1350, 1355 (Fed. Cir. 2001); *In re GPAC Inc*., 57 F.3d 1573, 1579 (Fed. Cir. 1995); *In re*

Oelrich, 579 F.2d 86, 91 (CCPA 1978). We analyze the asserted grounds of unpatentability in accordance with the above-stated principles.

C. Claims 1, 3–10, 12, 15, 17–20, and 42—Obviousness over Wang and Lantsman, or Wang, Lantsman, and Mozgrin

GlobalFoundries asserts that claims 1, 3–7, 9, 10, 12, 15, 19, 20, and 42 are unpatentable under 35 U.S.C. § 103(a) as obvious over the combination of Wang and Lantsman. Pet. 39–57. GlobalFoundries also asserts that claims 8, 17, and 18 are unpatentable under 35 U.S.C. § 103(a) as obvious over the combination of Wang, Lantsman, and Mozgrin. Pet. 57–59. As support, GlobalFoundries provides detailed explanations as to how each claim limitation is met by the references and rationales for combining the references, as well as a declaration of Dr. Kortshagen (Ex. 1002). GlobalFoundries also submitted a Declaration of Dr. Overzet (Ex. 1022) to support its Reply to Zond's Patent Owner Response.

Zond responds that the combinations of prior art do not disclose every claim element. PO Resp. 34–54. Zond also argues that there is insufficient reason to combine the technical disclosures of Wang, Lantsman, and Mozgrin. *Id*. at 19–34. To support its contentions, Zond proffers a Declaration of Dr. Larry D. Hartsough (Ex. 2005). Zond does not argue that elements of claims 8, 17, and 18 are not taught or suggested by the combination of Wang, Lantsman, and Mozgrin, only that there is insufficient reason to combine the references. *Id*.

We have reviewed the entire record before us, including the parties' explanations and supporting evidence presented during this trial. We begin our discussion with a brief summary of Wang and Lantsman, address their

combination with Mozgrin with respect to the second ground, and then we address the parties' contentions in turn.

Wang

Wang discloses a power pulsed magnetron sputtering apparatus for generating a very high plasma density. Ex. 1005, Abs. Wang also discloses a sputtering method for depositing metal layers onto advanced semiconductor integrated circuit structures. *Id*. at 1:4–15.

Figure 1 of Wang, reproduced below, illustrates a cross-sectional view of a power pulsed magnetron sputtering reactor:

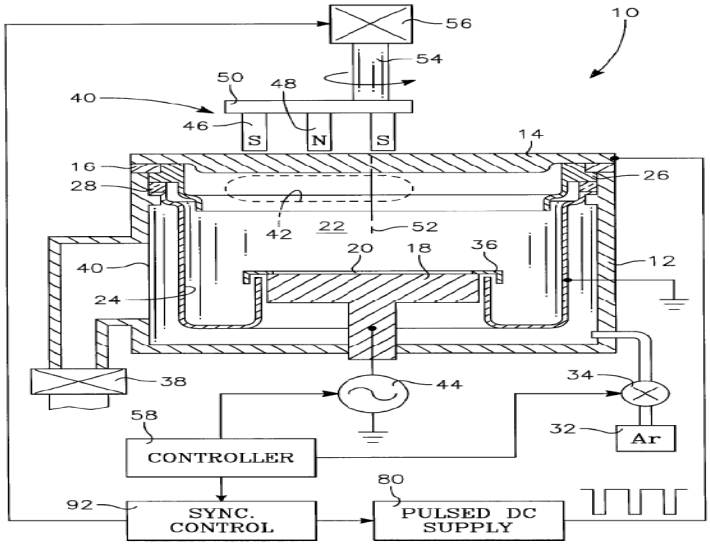

FIG. 1

Fig. 1 of Wang illustrates its magnetron sputtering apparatus.

As shown in Figure 1 of Wang, magnetron sputtering apparatus 10 has pedestal 18 for supporting semiconductor substrate 20, anode 24, cathode 14, magnet assembly 40, and pulsed DC power supply 80. *Id*. at 3:57–4:55. According to Wang, the apparatus is capable of creating high density plasma in region 42, from argon gas feed 32 through mass flow controller 34, which ionizes a substantial fraction of the sputtered particles

into positively charged metal ions and also increases the sputtering rate. *Id*. at 4:5–34. Wang further recognizes that, if a large portion of the sputtered particles are ionized, the films are deposited more uniformly and effectively—the sputtered ions can be accelerated towards a negatively charged substrate, coating the bottom and sides of holes that are narrow and deep. *Id*. at 1:24–29.

Figure 6 of Wang, reproduced below, illustrates how the apparatus applies a pulsed power to the plasma:

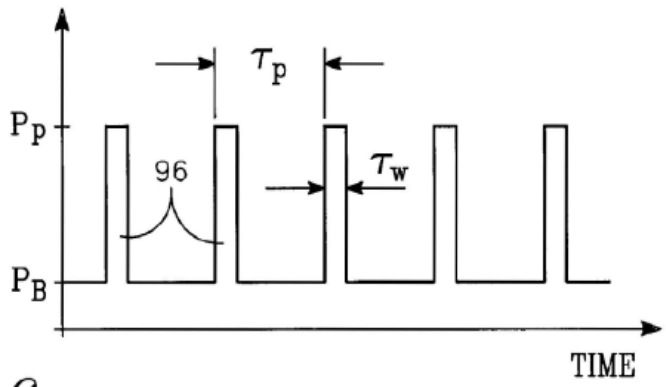

FIG. 6

Fig. 6 of Wang illustrates a representation of applied pulses.

As shown in Figure 6 of Wang, the target is maintained at background power level P_B between high power pulses 96 with peak power level P_P. *Id*. at 7:13–39. Background power level P_B exceeds the minimum power necessary to support a plasma in the chamber at the operational pressure (e.g., 1kW). *Id*. Peak power P_P is at least 10 times (preferably 100 or 1000 times) background power level P_B. *Id*. The application of high peak power P_P causes the existing plasma to spread quickly, and increases the density of the plasma. *Id*. According to Dr. Kortshagen, Wang's apparatus generates a low-density (weakly-ionized) plasma during the application of background

power P_B, and a high-density plasma during the application of peak power P_P. Ex. 1002 ¶¶ 125–130; *see also* Pet. 41–43.

Lantsman

Lantsman discloses a plasma ignition system for plasma processing chambers having primary and secondary power supplies, used to generate a plasma current and a process initiation voltage, respectively. Ex. 1004, Abs. The primary power supply provides the primary power to electrically drive the cathode during the plasma process, and the secondary power supply supplies an initial plasma ignition voltage to "pre-ignite" the plasma so that when the primary power supply is applied, the system smoothly transitions to final plasma development and deposition. *Id*. at 2:48–51.

The system is applicable to magnetron and non-magnetron sputtering and radio frequency (RF) sputtering systems. *Id*. at 1:6–8. Lantsman also provides that "arcing which can be produced by overvoltages, can cause local overheating of the target, leading to evaporation or flaking of target material into the processing chamber and causing substrate particle contamination and device damage," and "[t]hus, it is advantageous to avoid voltage spikes during processing wherever possible." *Id*. at 1:51–59.

Lantsman also discloses that "at the beginning of processing . . . gas is introduced into the chamber" and "[w]hen the plasma process is completed, the gas flow is stopped." *Id*. at 3:10–13. This is illustrated in Figure 6 of Lantsman reproduced below:

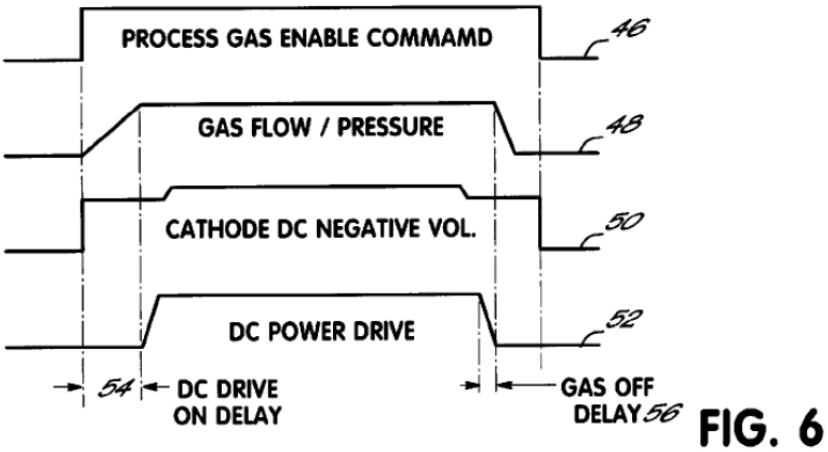

FIG. 6

Fig. 6 of Lantsman illustrates the timing of its processes Figure 6 illustrates that the gas flow is initiated, and the gas flow and pressure begin to ramp upwards toward normal processing levels for the processing stage. *Id*. at 5:39–42.

Rationale to Combine References

GlobalFoundries asserts that it would have been obvious to have combined Wang and Lantsman to render the claims obvious. Pet. 46–49 (citing Ex. 1002 ¶¶ 134–145). GlobalFoundries discusses the suggestion of continuing to supply the feed gas in the process of Wang, and argues that this continuance is likely to occur during that disclosed process, although not expressly recited. Pet. 44–46; Ex. 1002 ¶ 133. GlobalFoundries also argues that even if Wang does not disclose maintaining the flow of the feed gases, "[i]t would have been obvious to one of ordinary skill to continue to exchange the feed gas during Wang's application of background power and high peak power, as taught by Lantsman." Pet. 47. GlobalFoundries submits an ordinarily skilled artisan would have been motivated to combine

Wang and Lantsman because both are directed to sputtering and both employ two power supplies, one for pre-ionization and the other for deposition. *Id*. In addition, both Wang and Lantsman are concerned with generating plasma while avoiding arcing. *Id*. GlobalFoundries also cites to the testimony of Dr. Kortshagen that the continuous flow of gas would allow for diffusion of the strongly-ionized plasma and allow for additional power to be absorbed by the plasma. *Id*. at 47–48; Ex. 1002 ¶ 138.

Furthermore, GlobalFoundries acknowledges that Wang does not disclose explicitly that its magnets can be electro-magnets, or disclose specifically the peak plasma densities recited in claims 17 and 18. Pet. 57–59. GlobalFoundries argues that it would have been obvious to have used the electro-magnet of Mozgrin in the system of Wang and that, given the power levels used in Wang, Mozgrin makes clear that Wang's peak plasma densities would have been similar. *Id*.

We determine that both Wang and Mozgrin deal with pulse magnetron sputtering (Ex. 1005, Abs.; Ex. 1003, 400), and we are persuaded that it would have been obvious to have used Mozgrin's electro-magnet in the system of Wang. Dec. 20–21 (citing Pet. 57–58). Additionally, given the similar power levels applied in both Wang and Mozgrin (Ex. 1005, 7:13–30; Ex. 1003, 401), we are persuaded also that the plasma formed in Wang would have similar peak plasma density parameters, or that one of ordinary skill in the art would have been motivated to use the densities disclosed in Mozgrin in the system of Wang. *Id*.

The parties' dispute mainly centers on whether GlobalFoundries has articulated a reason with rational underpinning why one with ordinary skill

in the art would have combined the prior art teachings. Zond argues that GlobalFoundries fails to demonstrate that one with ordinary skill in the art would have combined the systems of Wang, Lantsman, and Mozgrin, and to achieve the claimed invention with reasonable expectation of success or predictable results. PO Resp. 19–34.

In particular, Zond contends that GlobalFoundries does not take into consideration the substantial, fundamental structural differences between the systems of Wang, Lantsman, and Mozgrin—e.g., pressure, chamber geometry, gap dimensions, and magnetic fields. *Id*. at 28–34 (citing *e.g.*, Ex. 1003, 400–409; Ex. 1004, Abstract, 2:49–51, 4:11–37, 5:42–52; Ex. 1005, 3:60–61, 5: 18–22; Ex. 2004 5:60–62; Ex. 2006 ¶¶ 80–84). Additionally, even if a combination was somehow made, Zond contends it would differ significantly from the system disclosed in the ’142 Patent. *Id*.

In its Reply, GlobalFoundries responds that Zond’s arguments apply statements directed to different embodiments of Wang together and attempt to physically incorporate Lantsman into Wang. Reply 2–4. GlobalFoundries also responds that one of ordinary skill in the art would have viewed Lantsman’s teachings as applicable to Wang’s system, based on the ordinary level of skill in the art and the similarities between Wang and Lantsman. *Id*. Upon consideration of the evidence before us, we are persuaded by GlobalFoundries’ contentions.

We are not persuaded by Zond’s argument that Mozgrin’s, Lantsman’s, and Wang’s sputtering apparatuses would have been viewed as significantly different, or that one with ordinary skill in the art would not have had a reasonable expectation of success in combining the teachings of the references. Obviousness does not require absolute predictability, only a

reasonable expectation that the beneficial result will be achieved. *In re Merck & Co.*, 800 F.2d 1091, 1097 (Fed. Cir. 1986).

"It is well-established that a determination of obviousness based on teachings from multiple references does not require an actual, physical substitution of elements." *In re Mouttet*, 686 F.3d 1322, 1332 (Fed. Cir. 2012); *In re Etter*, 756 F.2d 852, 859 (Fed. Cir. 1985) (en banc) (noting that the criterion for obviousness is not whether the references can be combined physically, but whether the claimed invention is rendered obvious by the teachings of the prior art as a whole). In that regard, one with ordinary skill in the art is not compelled to follow blindly the teaching of one prior art reference over the other without the exercise of independent judgment. *Lear Siegler, Inc. v. Aeroquip Corp.*, 733 F.2d 881, 889 (Fed. Cir. 1984); *see also KSR*, 550 U.S. at 420–21 (stating that a person with ordinary skill in the art is "a person of ordinary creativity, not an automaton," and "in many cases . . . will be able to fit the teachings of multiple patents together like pieces of a puzzle").

As Dr. Overzet testifies, Lantsman states that its techniques can be applied to any plasma process, including DC magnetron sputtering, where Wang is directed to DC magnetron sputtering. Ex. 1022 ¶¶ 66–67 (citing Ex. 1004, 6:14–17). Additionally, Dr. Overzet testifies that the different processing conditions in Wang and Lantsman are routine variables that ordinarily skilled artisans would understand need to be changed to accommodate different systems and processing conditions. *Id.* ¶ 68. In addition, Dr. Overzet points out that both Lantsman and Wang "teach two stage plasma systems." *Id.* Indeed, Lantsman discloses both "limited" and "substantial" plasma stages (Ex. 1004, 2:48–51, 4:58–61, 5:6), and Wang

discloses plasma states that vary with the application of pulses (Ex. 1005, 7:13–39). As noted above, Wang discloses background power P_B of 1 kW (falling within the range of 0.01–100 kW, as disclosed in the '142 Patent, for generating a weakly-ionized plasma), and pulse peak power P_P of 1 MW (falling within the range of 1 kW–10 MW, as disclosed in the '142 Patent, for generating a strongly-ionized plasma). Ex. 1005, 7:19–25; Ex. 1001, 11:34–38, 12:1–8, Fig. 5. On this record, we credit Dr. Overzet's testimony (Ex. 1022 ¶¶ 66–69) because his explanations are consistent with the prior art of record.

For the foregoing reasons, we are persuaded that GlobalFoundries has articulated a reason with rational underpinning why one with ordinary skill in the art would have combined Wang, Lantsman, and Mozgrin as indicated in the Petition, and where that reason is supported by a preponderance of evidence.

Feed Gas from a Gas Line Diffusing the Strongly-Ionized Plasma

Claim 1 recites, in part, "a gas line that supplies feed gas to the strongly-ionized plasma, the feed gas diffusing the strongly-ionized plasma, thereby allowing additional power from the pulsed power supply to be absorbed by the strongly-ionized plasma," with independent claim 10 reciting similar subject matter.

Zond argues that Lantsman fails to disclose generating a strongly-ionized plasma, or disclose any activity of the feed gas and plasma diffusion. PO Resp. 35–36 (citing Ex. 2005 ¶ 94). Additionally, Zond argues that Wang does not teach "the feed gas diffusing the strongly-ionized plasma"

because Wang's chamber is significantly different in design from that of the '142 Patent and the feed gas in Wang "'could not possibly diffuse the strongly ionized plasma because it enters the chamber far from the strongly ionized plasma and is directed away from the strongly ionized plasma.'" *Id*. at 36–40 (citing Ex. 2005 ¶ 94). Also, Zond argues that the only motivation to diffuse the strongly-ionized plasma and allow additional power to be absorbed comes from the '142 Patent. *Id*. at 40–41. We do not find Zond's arguments to be persuasive.

First, we note that it not essential for Lantsman to disclose a strongly-ionized plasma because Wang discloses a strongly-ionized plasma, and the specified ground of unpatentability relies on the combination of Lantsman and Wang. Second, as GlobalFoundries notes, Dr. Hartsough concedes that "the gas will tend to **diffuse throughout the whole volume**," including areas containing the high-density plasma. Reply 5–6; Ex. 1024, 87:22–88:9, 88:22–89:2, 92:18–93:7. Additionally, Dr. Overzet testifies that due to random thermal motion and the pressure gradient in the reaction chamber, Wang's argon gas will diffuse into the plasma near the target. Ex. 1022 ¶ 77. Lastly, Dr. Hartsough acknowledges that a feed gas was commonly used to diffuse a strongly-ionized plasma (Ex. 1024, 32:18–33:5), such that ordinarily skilled artisans would have used such a process without resort to the disclosure of the '142 Patent.

Given the evidence in this record, we determine that GlobalFoundries has demonstrated, by a preponderance of evidence, that the combination of Wang and Lantsman would have suggested to one with ordinary skill in the art at the time of the invention the provision of a feed gas to a strongly-

ionized plasma, to diffuse the plasma and allow for greater absorption of power, as required by claims 1 and 10.

Electrical Pulse with Magnitude and Rise-Time to Generate Strongly-Ionized Plasma

Claim 1 recites, in part, "the electrical pulse having a magnitude and a rise-time that is sufficient to increase the density of the weakly-ionized plasma to generate a strongly-ionized plasma," with claim 10 reciting similar subject matter.

Zond argues that Wang does not teach that the magnitude and the rise time of its pulses are sufficient to increase the density of weakly-ionized plasma to generate strongly-ionized plasma, as required by independent claims 1 and 10 of the '142 Patent. PO Resp. 41–42. GlobalFoundries argues that one of ordinary skill in the art would have recognized from the teachings of Wang, that certain parameters, such as the magnitude or the rise time of a voltage pulse, could be chosen to generate a strongly-ionized plasma. Reply 9. We agree with GlobalFoundries.

We are not persuaded by Zond's arguments. Wang selects pulse characteristics and reactors with the goal of "producing a high fraction of ionized sputtered particles," which "has long been exploited in high-density plasma." Ex. 1005, 1:7–8, 30–37. Therefore, we are persuaded that one of ordinary skill in the art would have understood that the parameters of the magnitude and the rise time of a voltage pulse could be controlled to achieve the desired plasma processes, and that it would have been obvious to select

the magnitude and the rise time of the electrical pulse, to achieve the goals of the cited references.

In addition, claim 1 is an apparatus claim and claim 10 is a method claim. With respect to claim 1, we are persuaded that the claim recites an intended use that will not limit the scope of the claim, such that the obviousness of claim 1 is based on whether the elements of that claim are obvious, not on their intended use. With respect to claim 10, the method does not require an optimization of magnitude or rise time to achieve the strongly-ionized plasma, but simply that the generated electric pulse achieve that plasma state, which Wang does, as discussed above.

Based on the evidence before us, we are persuaded that GlobalFoundries has demonstrated, by a preponderance of evidence, that the combination of Wang and Lantsman renders obvious the supplying an electrical pulse having a magnitude and a rise time of the voltage pulses to generate a strongly-ionized plasma, per claims 1 and 10.

Substantially Uniform Strongly-Ionized Plasma

Claim 15 recites, in part, "selecting at least one of a pulse amplitude and a pulse width of the electrical pulse in order to cause the strongly-ionized plasma to be substantially uniform." Zond argues that GlobalFoundries has not shown that Wang discloses that the substantially uniform plasma is caused by selecting either the amplitude or width of the pulse. PO Resp. 42–43. We do not agree with Zond.

Zond appears to concede that Wang provides for a uniformity of its plasma, if only limited to the area beneath the rotating magnet. *Id*. at 43.

Wang is clear that "[p]referably, the peak power P_P is at least 10 times the background power P_B" (Ex. 1005, 7:19–22), i.e., choosing the pulse amplitude, and "the application of the high peak power P_P instead quickly causes the already existing plasma to spread," i.e., creating a substantially uniform plasma. *Id*. at 7:28–30. As well, Wang provides that "[t]he choice of pulse width τ_w is dictated by considerations of . . . sputtering process conditions . . . for achieving the greatest effect," where uniformity may allow for the greatest effect of the plasma over a target. *Id*. at 5:43–49.

Given the evidence in this record, we determine that GlobalFoundries has demonstrated, by a preponderance of evidence, that the combination of Wang and Lantsman would have suggested to one with ordinary skill in the art at the time of the invention that the amplitude and pulse width can be selected to achieve substantial uniformity of the plasma, as required by claim 15.

Supplying Feed Gas While Applying Electrical Pulse

Claim 3 recites, in part, that "the gas line supplies additional feed gas that exchanges the weakly-ionized plasma while applying the electrical pulse across," with claim 12 reciting similar limitations. Zond argues that Lantsman only teaches two DC power supplies, which do not supply pulses, and Wang teaches only the application of a background power, P_B, which is also not a pulse. PO Resp. 43–45. This argument was further elucidated at the Oral Hearing, with Zond's counsel explaining that

> you would also need to apply the pulse while there is electrical -- while there is weakly-ionized plasma, while you are supplying the additional feed gas. You have to get all three

> of these things. And the combination of Lantsman and Wang at most with the various scenarios that you have identified only gets two of the three.

Tr. 94. Counsel also indicated that claims 3 and 12 directly map to an embodiment disclosed in the '142 Patent (Ex. 1001, 5:5–17) whereby the weakly-ionized plasma is formed from pulses from a pulsed power supply portion of the ionization source. Tr. 101–103. We are not persuaded by Zond's argument.

The problems with Zond's arguments come from the language of claims 3 and 12 themselves in that Zond is arguing limitations not recited in the claims. Claim 12 does not recite anything about the application of an electrical pulse. Claim 3 depends from claim 1 and relies on that claim for an antecedent basis for the limitation "the electrical pulse." However, claim 1 recites "an electrical pulse" only with respect to the power supply element for generating a strongly-ionized plasma, and not the ionization source element for generating a weakly-ionized plasma. As such, claim 3 does not require the weakly–ionized plasma to be formed by pulses from a pulsed power supply portion of the ionization source, as alleged by Zond.

As GlobalFoundries has asserted, both Wang and Lantsman disclose the continuous supply of feed gas during the entire plasma process. Reply 11–12 (citing Ex. 1022 ¶¶ 86–88). Given the application of the pulses to the weakly-ionized plasma to form the strongly-ionized plasma, in Wang, and the continuous supply of feed gas, we are persuaded that claims 3 and 12 would have been obvious.

Given the evidence in this record, we determine that GlobalFoundries has demonstrated, by a preponderance of evidence, that the combination of

Wang and Lantsman would have suggested to one with ordinary skill in the art at the time of the invention a feed gas that supplies to the weakly-ionized plasma during the application of an electrical pulse, as required by claims 3 and 12.

Power Supply Generates Constant Power / Voltage

Claim 1 recites, in part, "a power supply that supplies power to the weakly-ionized plasma though an electrical pulse applied across the weakly-ionized plasma," with dependent claim 4 reciting that "the power supply generates a constant power," and dependent claim 5 reciting that "the power supply generates a constant voltage." GlobalFoundries asserts that "Wang's pulsed DC power supply 80 (shown in Wang's Figs. 1 and 7) generates a peak level power, P_P, which is constant for the duration of the pulse τ_w, as shown in Fig. 6." Pet. 52.

Zond argues that because Wang's figures are idealized, the actual power pulse applied in Wang is not constant for the duration of the pulse τ_w. PO Resp. 46–48 (citing Ex. 2005 ¶¶ 111, 112, 133). Zond also argues that because the pulse in Wang is a power pulse, and the current in the sputtering system varies with the state of the plasma, the voltage varies with the current and is not constant. *Id.* at 49–51 (citing Ex. 2005 ¶¶ 115, 116). We do not find Zond's arguments to be persuasive.

GlobalFoundries responds that Dr. Hartsough, Zond's expert, concedes that Wang's power supply generates a constant power and the voltage would approach a constant value. Reply 13 (citing Ex. 1023, 152:4–6; Ex. 1025, 176:20–25; Ex. 1005, 7:49–51; Ex. 2005 ¶ 57). Dr. Hartsough

also concedes that typical power supplies, such as described by Wang, operate in the same manner as those disclosed in the '142 Patent. *Id*. (citing Ex. 1026, 149:17–150:20, with respect to related U.S. Patent No. 6,896,775 B2, where Fig. 5 of that patent is identical to Fig. 4 of the '142 Patent). Based on this, GlobalFoundries counters that Wang teaches applying pulses at both constant voltage and constant power, in specific regions. *Id*. We agree with GlobalFoundries.

As shown in Figure 7 of Wang, pulsed DC power supply 80 produces a series of voltage pulses, and portions of the voltage pulses are constant. Ex. 1005, 7:57–61. Figure 6 of Wang depicts that portions of the power pulses are constant. Moreover, it is clear from Figures 6 and 7 of Wang that Wang's system is designed to maintain both the amplitude of the voltage pulses and the amplitude of the power pulses constant during the entire process. Based on the evidence in this record, we are persuaded that one with ordinary skill in the art would have recognized that Wang discloses: (1) portions of voltage and power are constant, and (2) the amplitude of the voltage pulses and the amplitude of the power pulses are constant.

In addition, Dr. Overzet notes that Figure 4 of the '142 Patent also is idealized. Ex. 1022 ¶ 116. Indeed, the '142 Patent explicitly states that Figures 3, 4, and 7 merely illustrate *graphical representations*, and not the actual shape of the voltage and power pulses. Ex. 1001, 1:65–2:15. As well, given that the instant ground purports claims to be obvious, what the disclosures of Wang and Lantsman would have suggested to persons of ordinary skill in the art needs to be considered, even if, arguendo, the actual results were not as idealized as the representations provided in the figures.

Given the evidence in this record, we determine that GlobalFoundries has demonstrated, by a preponderance of evidence, that the combination of Wang and Lantsman would have suggested to one with ordinary skill in the art at the time of the invention, a pulsed power supply that generates a constant power or a constant voltage, as required by claims 4 and 5.

Ionization Source is an Electrode Coupled to a DC Power Supply

Claim 6 recites, in part, that "the ionization source is chosen from the group comprising an electrode coupled to a DC power supply." Zond argues that GlobalFoundries' reliance on cathode 14 of Wang to satisfy the electrode limitation of claim 6 (Pet. 54) is misplaced as the '142 Patent makes clear that the electrode is separate and distinct from the anode or the cathode and is a filament. PO Resp. 53–54.

In response, GlobalFoundries responds that Zond's declarant, Dr. Hartsough, conceded that an "electrode" would include other electrodes in the system, including the anode and the cathode. Reply 15 (citing Ex. 1024, 98:17–99:15). We agree. Although the Specification of the '142 Patent discloses an embodiment having the electrode as separate and distinct from the cathode and the anode, claim 6, and claim 1 from which it depends, do not recite such a distinction. A cathode or an anode connected to a DC power supply that can generate the weakly-ionized plasma is sufficient to meet the limitations of claim 6.

Given the evidence in this record, we determine that GlobalFoundries has demonstrated, by a preponderance of evidence, that the combination of Wang and Lantsman would have suggested to one with ordinary skill in the

art at the time of the invention choosing an electrode, connected to a DC power supply, to create weakly-ionized plasma, as required by claim 6.

Petition Fails to Set Forth a Proper Obviousness Analysis

Zond argues that GlobalFoundries failed to follow the legal framework for an obviousness analysis set forth in *Graham*, 383 U.S. at 17–18. PO Resp. 55–57. Zond continues that GlobalFoundries failed to identify differences between the cited art and the claims, i.e., failed to identify claim limitations that it believed are missing from Wang, Lantsman, and Mozgrin. *Id*. at 57–59. Zond argues that because GlobalFoundries argued that the claim limitations are taught by the combination of references, that leaves the Board with having to provide a supporting basis for the proffered grounds, and it would be "inappropriate for the Board to take the side of the Petitioner to salvage an inadequately expressed ground." *Id*. at 59 (citation omitted). We do not agree.

With respect to the instituted grounds, we are not persuaded of any ambiguity therein. Although GlobalFoundries offered differing theories of obviousness in the same ground, for example arguing that 1) Wang supplies the feed gas, 2) supplying feed gas is likely to occur during that disclosed process, and 3) it would have been obvious supplying feed gas would continue over the entire process in view of Lantsman, each theory is adequately explained on this record. *See* Pet. 45–48. We do not find this to be a case of "an inadequately expressed ground," but rather multiple reasons to show that the art teaches the claim element. The last theory, applying Lantsman, makes clear what potential deficiency in the art Lantsman is

proffered to cure and why an ordinarily skilled artisan would have combined Lantsman with Wang. This situation is very different from the case with an obviousness ground that contains no motivation or no detail on how a second reference is to be applied, and would require the Board to cast around to provide a basis for the ground. As such, we are not persuaded that the grounds of the Petition are defective on the bases alleged by Zond.

Conclusion

For the foregoing reasons, we conclude that GlobalFoundries has demonstrated, by a preponderance of evidence, that claims 1, 3–10, 12, 15, 17–20, and 42 are unpatentable over the asserted combinations of Wang and Lantsman, and Wang, Lantsman, and Mozgrin.

III. CONCLUSION

For the foregoing reasons, we conclude that GlobalFoundries has demonstrated, by a preponderance of the evidence, that claims 1, 3–10, 12, 15, 17–20, and 42 of the ’142 Patent are unpatentable based on the following grounds of unpatentability:

Claim(s)	Basis	References
1, 3–7, 9, 10, 12, 15, 19, 20, and 42	§ 103(a)	Wang and Lantsman
8, 17, and 18	§ 103(a)	Wang, Lantsman, and Mozgrin

IV. ORDER

In consideration of the foregoing, it is

ORDERED that claims 1, 3–10, 12, 15, 17–20, and 42 of the ’142 Patent are held *unpatentable*; and

FURTHER ORDERED that, because this is a final written decision, parties to the proceeding seeking judicial review of the decision must comply with the notice and service requirements of 37 C.F.R. § 90.2.

For PETITIONERS:

David M. Tennant
WHITE & CASE LLP
dtennant@whitecase.com

Gillette:

David L. Cavanaugh
Larissa B. Park
Michael A. Diener
WILMER CUTLER PICKERING HALE & DORR LLP
david.cavanaugh@wilmerhalde.com
larissa.park@wilmerhale.com
michael.diener@wilmerhale.com

Fujitsu:

David M O'Dell
David L. McCombs
HAYNES AND BOONE, LLP
david.odell.ipr@haynesboone.com
david.mccombs@haynesboone.com

Richard C. Kim
DUANE MORRIS, LLP
rckim@duanemorris.com

AMD:

Brian M. Berliner
Ryan K. Yagura
Xin-Yi Zhou
O'MELVENY & MYERS LLP
bberliner@omm.com
ryagura@omm.com
vzhou@omm.com

Renesas:

John J. Feldhaus
Pavan Agarwal
Mike R. Houston
FOLEY & LARDNER LLP
jfeldhaus@foley.com
pagarwal@foley.com
mhouston@foley.com

GlobalFoundries:

David M. Tennant
Dohm Chankong
WHITE & CASE LLP
dtennant@whitecase.com
dohm.chankong@whitecase.com

Toshiba:

Robinson Vu
BAKER BOTTS LLP
Robinson.vu@bakerbotts.com

For PATENT OWNER:

Gregory J. Gonsalves
THE GONSALVES LAW FIRM
gonsalves@gonsalveslawfirm.com

Bruce J. Barker
CHAO HADIDI STARK & BARKER LLP
bbarker@chsblaw.com

CERTIFICATE OF SERVICE

The undersigned hereby certifies that a copy of the foregoing

PATENT OWNER'S NOTICE OF APPEAL

was served on November 23, 2015, by filing this document though the Patent Review Processing System as well as delivering a copy via electronic mail directed to the attorneys of record for the Petitioner at the following address:

For Petitioner:
THE GILETTE COMPANY

David L. Cavanaugh, Reg. No. 36,476
Larissa Park, Reg. No. 59,051
Wilmer Cutler Pickering Hale and Dorr LLP
60 State Street
Boston, MA 02109

Email:
david.cavanaugh@wilmerhale.com;
larissa.park@wilmerhale.com

For Petitioner:
FUJITSU SEMICONDUCTOR LIMITED AND FUJITSU SEMICONDUCTOR AMERICA, INC.

David L. McCombs, Reg. No. 32,271
David M. O'Dell, Reg. No. 42,044
Haynes and Boone, LLP
2323 Victory Avenue, Suite 700
Dallas, TX 75219

Email:
david.mccombs@haynesboone.com;
david.odell@haynesboone.com

For Petitioner:
ADVANCED MICRO DEVICES, INC., RENESAS ELECTRONICS CORPORATION, RENESAS ELECTRONICS AMERICA, INC., GLOBALFOUNDRIES U.S., INC., GLOBALFOUNDRIES DRESDEN MODULE ONE LLC & CO. KG, GLOBALFOUNDRIES DRESDEN MODULE TWO LLC & CO. KG, TOSHIBA AMERICA ELECTRONIC COMPONENTS, INC., TOSHIBA AMERICA INC., TOSHIBA AMERICA INFORMATION SYSTEMS, INC., AND TOSHIBA CORPORATION

Robinson Vu
BAKER BOTTS LLP
ONE SHELL PLAZA
910 LOUISIANA STREET
HOUSTON, TX 77002
Robinson.vu@bakerbotts.com

Brian M. Berliner
Ryan K. Yagura
Xin-Yi Zhou
O'MELVENY & MYERS LLP
400 S. HOPE STREET
LOS ANGELES, CA 90071
bberliner@omm.com;
ryagura@omm.com;
vzhou@omm.com

John Feldhaus
Pavan Agarwal
Mike Houston
FOLEY & LARDNER LLP
3000 K STREET, N.W., SUITE 600
WASHINGTON, DC 20007
jfeldhaus@foley.com;
pagarwal@foley.com;
mhouston@foley.com

David M. Tennan
Dohm Chankong
WHITE & CASE LLP
701 THIRTEENTH STREET, NW
WASHINGTON, DC 20005
dtennant@whitecase.com
dohm.chankong@whitecase.com

The parties have agreed to electronic service in this matter.

An additional copy was served on

Director of the United States Patent and Trademark Office
c/o Office of the General Counsel
Madison Building East, 1 OB20
600 Dulany Street
Alexandria, VA 22314-5793

As required under 37 C.F.R. § 90.2(a).

Respectfully submitted,

Date: November 23, 2015

by: */Tarek N. Fahmi/*
Tarek N. Fahmi, Reg. No. 41,402

Ascenda Law Group, PC
333 W. San Carlos St., Suite 200
San Jose, CA 95110
1 866 877 4883