UNITED STATES PATENT AND TRADEMARK OFFICE

BEFORE THE PATENT TRIAL AND APPEAL BOARD

DELPHI TECHNOLOGIES, LLC,

Petitioner

v.

MICROCHIP TECHNOLOGY INC.,

Patent Owner

Case IPR2017-00864
Patent 7,523,243

PETITIONER'S NOTICE OF APPEAL

Pursuant to 35 U.S.C. §§ 141, 142, and 319, and 37 C.F.R. §§ 90.2-90.3, notice is hereby given that Petitioner Delphi Technologies, LLC, appeals to the United States Court of Appeals for the Federal Circuit from the Final Written Decision of the Patent Trial and Appeal Board ("Board") entered on August 28, 2018 (Paper 59) in IPR2017-00864, and from all underlying orders, decisions, rulings, and opinions. A copy of the Final Written Decision is attached.

In accordance with 37 C.F.R. § 90.2(a)(3)(ii), Petitioner further indicates that the issues on appeal include, but are not limited to: (1) the Board's determinations that claims 2, 6, 10, 16, 17, 22-25 of U.S. Patent No. 7,523,243 have not been shown to be unpatentable; (2) the Board's determination that Petitioner has not demonstrated by a preponderance of the evidence that claims 2, 6, 10, 16, 17, 22-25 of the '243 patent are unpatentable; and (3) the Board's authority, and all other issues decided adversely to Petitioner in any order, decision, ruling or opinion underlying or supporting the Final Written Decision.

Pursuant to 35 U.S.C. § 142 and 37 C.F.R. § 90.2(a), this Notice is being filed with the Director of the United States Patent and Trademark Office, and a copy of this Notice is being concurrently filed with the Patent Trial and Appeal Board. In addition, a copy of this Notice and the required docketing fees are being filed with the Clerk's Office for the United States Court of Appeals for

the Federal Circuit via CM/ECF.

Dated: February 12, 2019

Respectfully submitted,

ROPES & GRAY LLP

By: /Scott A. McKeown/

Scott A. McKeown
Reg. No. 42,866
ROPES & GRAY LLP
2099 Pennsylvania Avenue, NW
Washington, D.C. 20006-6807
Phone: +1-202-508-4740
Fax: +1-617-235-9492
scott.mckeown@ropesgray.com

CERTIFICATE OF FILING

It is certified that, in addition to being filed electronically through the Patent Trial and Appeal Board's E2E System, a true and correct copy of the foregoing PETITIONER'S NOTICE OF APPEAL has been filed by Federal Express on February 12, 2019, with the Director of the United States Patent and Trademark Office, at the following address:

Director of the United States Patent and Trademark Office
c/o Office of the General Counsel
10B20, Madison Building East,
600 Dulany Street
Alexandria, VA 22314-5793

Dated: February 12, 2019

Respectfully submitted,

ROPES & GRAY LLP

By: /Scott A. McKeown/
Scott A. McKeown
Reg. No. 42,866

CERTIFICATE OF FILING

It is certified that, a copy of the foregoing PETITIONER'S NOTICE OF APPEAL was filed electronically through the United States Court of Appeals for the Federal Circuit's CM/ECF system February 12, 2019 and one paper copy delivered by hand on February 12, 2019, with the Clerk of the Court of the Federal Circuit, at the following address:

Clerk of the Court
717 Madison Place, N.W.
Room 401
Washington D.C. 20439

Dated: February 12, 2019

Respectfully submitted,

ROPES & GRAY LLP

By: /Scott A. McKeown/
Scott A. McKeown
Reg. No. 42,866

CERTIFICATE OF SERVICE

The undersigned certifies that the foregoing PETITIONER'S NOTICE OF APPEAL was served by filing this document through the Patent Trial and Appeal Board End to End (PTAB E2E) as well as providing a courtesy copy via electronic mail to the following attorneys of record for the Patent Owner listed below:

Bruce W. Slayden II (Reg. No. 33,790)
SLAYDEN GRUBERT BEARD PLLC
401 Congress Avenue, Suite 1900
Austin, TX 78701
t: 512.402.3550
f: 512.402.6865
bslayden@sgbfirm.com

Brian C. Banner (pro hac vice)
bbanner@sgbfirm.com
R. William Beard, Jr. (Reg. No. 39,903)
wbeard@sgbfirm.com
Truman H. Fenton (Reg. No. 64,766)
tfenton@sgbfirm.com
Jerry F. Suva (Reg. No. 67,902)
jsuva@sgbfirm.com

Dated: February 12, 2019

Respectfully submitted,

ROPES & GRAY LLP

By: /Scott A. McKeown/
Scott A. McKeown
Reg. No. 42,866

Trials@uspto.gov
571-272-7822

Paper No. 59
Entered: August 28, 2018

UNITED STATES PATENT AND TRADEMARK OFFICE

BEFORE THE PATENT TRIAL AND APPEAL BOARD

DELPHI TECHNOLOGIES, LLC[1],
Petitioner,

v.

MICROCHIP TECHNOLOGY INC.,
Patent Owner.

Case IPR2017-00864
Patent 7,523,243 B2

Before BRIAN J. McNAMARA, DANIEL N. FISHMAN, and MATTHEW R. CLEMENTS, *Administrative Patent Judges*.

FISHMAN, *Administrative Patent Judge.*

FINAL WRITTEN DECISION
35 U.S.C. § 318(a) and 37 C.F.R. § 42.73
and
DECISION DENYING PATENT OWNER'S MOTION TO EXCLUDE
37 C.F.R. § 42.64

---

[1] Petitioner filed a notice of its name change from "Delphi Technologies, Inc." to "Delphi Technologies, LLC." Paper 49, 1–2.

I. INTRODUCTION

Delphi Technologies, Inc. ("Petitioner") filed a Petition (Paper 1, "Pet.") requesting *inter partes* review of claims 1–25 (hereinafter the "challenged claims") of U.S. Patent No. 7,523,243 B2 (Ex. 1001, "the '243 patent") pursuant to 35 U.S.C. §§ 311–319. Microchip Technology Inc. ("Patent Owner") filed a Patent Owner Preliminary Response (Paper 11, "Prelim. Resp."). On August 29, 2017, based on the record before us at that time, we instituted an *inter partes* review of *only* claims 1–8, 11, 15–20, and 22–25. Paper 12 ("Decision" or "Dec."), 2, 43.

Patent Owner filed a Patent Owner Response[2] (Paper 21, "Response" or "PO Resp.") and Petitioner filed a Reply (Paper 25, "Reply"). The Petition relies on Declarations of John Garney (Exs. 1023, 1053) and Patent Owner relies on a Declaration of Geert Knapen (Ex. 2007).

In accordance with our authorizing order (Paper 27), Patent Owner filed a Sur-Reply addressing various claim construction issues (Paper 28, "PO Sur-Reply") and Petitioner filed a Sur-Sur-Reply responsive to Patent Owner's claim constructions (Paper 29, "Pet. Sur-Sur-Reply")

Responsive to the Supreme Court's decision in *SAS Institute, Inc. v. Iancu*, 138 S. Ct. 1348 (2018), we issued an Order modifying our Decision to institute review of all claims and all grounds. Paper 33 ("*SAS* Order"). We authorized additional briefing to address issues relating to claims and grounds that were denied initially in our Decision on Institution. Paper 36. Petitioner filed an authorized Supplemental Reply (Paper 38, "Supp.

[2] Patent Owner improperly attempts to incorporate by reference portions of its Preliminary Response into its Response. PO Resp. 17 n.5; *see also* 37 C.F.R. § 42.6(a)(3). We disregard the improperly incorporated material.

Reply"), Patent Owner filed an authorized Supplemental Response (Paper 41, "Supp. Resp."), and Petitioner filed an authorized Sur-Reply (Paper 42).

Oral Argument was conducted on June 14, 2018, and a transcript of that hearing is of record. Paper 53 ("Tr.").

We have jurisdiction under 35 U.S.C. § 6. The Petitioner has the burden of proving unpatentability by a preponderance of the evidence. *See* 35 U.S.C. § 316(e); *see also* 37 C.F.R. § 42.1(d). This Final Written Decision is issued pursuant to 35 U.S.C. § 318(a) and 37 C.F.R. § 42.73.

For the reasons expressed below, we conclude that Petitioner has shown by a preponderance of the evidence that claims 1, 3–5, 7–9, 11–15, and 18–21 are unpatentable. Petitioner has not persuaded us by a preponderance of the evidence that claims 2, 6, 10, 16, 17, and 22–25 are unpatentable.

A. Real Parties in Interest and Related Matters

The Petition identifies Delphi Technologies, Inc. and Delphi Automotive Systems, LLC as real parties in interest. Pet. 1. Petitioner filed a notice indicating that Delphi Technologies, Inc. had changed its name to Delphi Technologies, LLC and indicating that Delphi Automotive Systems, LLC had changed its name to Aptiv Services US, LLC. Paper 49, 1–2. Both Petitioner and Patent Owner identify a related litigation matter captioned *Microchip Technology Inc. v. Delphi Automotive Systems, LLC.*, Case No. 2:16-cv-02817-DJH, filed in the U.S. District Court for the District of Arizona. Pet. 2; Paper 9, 1. Petitioner also identifies another related litigation captioned *Microchip Technology Inc. v. Delphi Automotive Systems, LLC.*, Case No. 1:17-cv-01194-LPS, filed in the U.S. District Court

for the District of Delaware. Paper 14, 1. Petitioner also identifies a related petition for *Inter Partes* Review as IPR2017-00970. Paper 3, 1.

B. The '243 Patent

According to the '243 patent, the Universal Serial Bus ("USB") allows coupling of a variety of peripheral devices to a computer system. Ex. 1001, 1:19–21. To satisfy consumers' desire to share peripheral devices, such as printers, scanners, etc., prior solutions provided switching devices that allow a peripheral device to be switchably shared among multiple USB host computer systems. *Id.* at 1:56–60. Each time a USB peripheral device is switched (disconnected and re-connected) from one USB host to another, the USB host must reconfigure the peripheral device before data exchanges may ensue. *Id.* at 1:60–2:2. Such configuration or reconfiguration includes bus enumeration—a step that, *inter alia*, assigns an address to each peripheral device on the bus used by the host on that bus to access each peripheral device. *See* Ex. 1004, 47–48.[3] This reconfiguration causes, among other problems, loss of state information relevant to the previously connected host. Ex. 1001, 1:64–2:5.

The '243 patent purports to resolve this problem by allowing sharing of a USB device among multiple USB hosts without requiring such reconfiguration. Ex. 1001, 2:9–12. Specifically, according to the '243 patent, a multi-host capable device is disclosed and claimed that includes separate buffers for each of multiple host connections and maintains a dedicated address and configuration for each host. *Id.* at 2:33–35.

---

[3] Citations are to Petitioner's page numbering added in the footer of the Exhibit, as opposed to the original page numbering of the document.

Figure 1, reproduced below, depicts an exemplary system according to the ’243 patent.

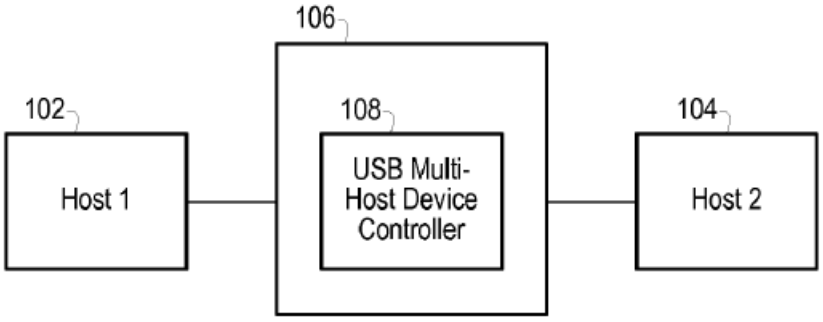

FIG. 1

Figure 1 depicts a system including hosts 102 and 104, both coupled with multi-host device 106, which, in turn, includes USB multi-host device controller. *Id.* at 3:47–51.

Figure 3, reproduced below, depicts additional exemplary details of multi-host device 106 of Figure 1.

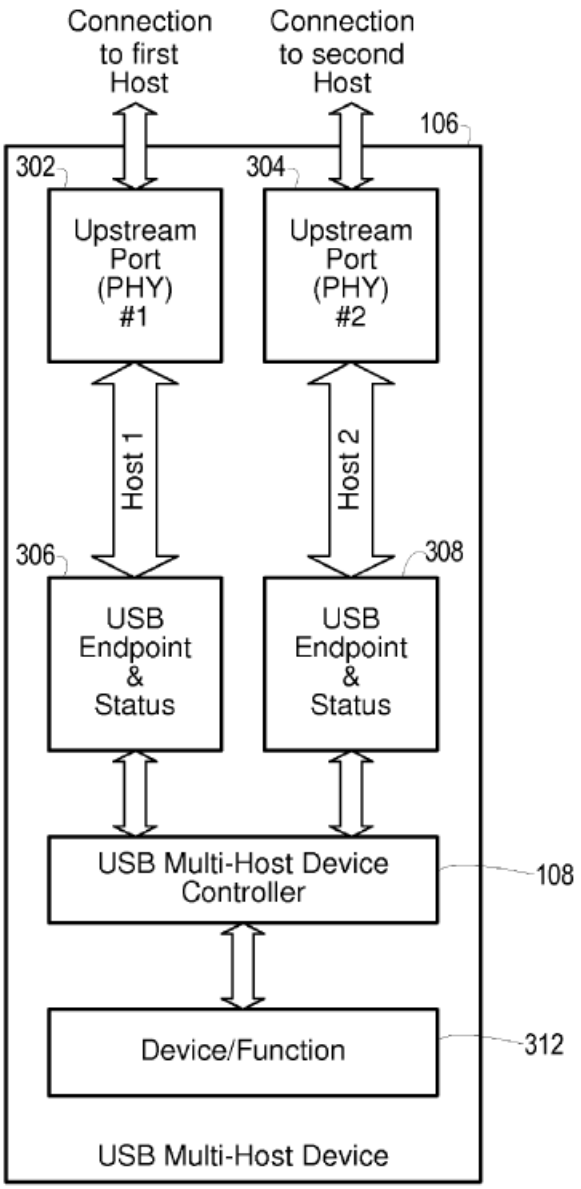

FIG. 3

Figure 3 depicts USB multi-host device 106 comprising upstream ports 302 and 304, each configured to couple with a corresponding host system. *Id.* at 3:60–66. Upstream ports 302 and 304 are coupled with USB endpoint & status buffers 306 and 308, respectively, "to buffer data and control reads and writes to/from each respective host corresponding to PHY 302 and PHY

304 and/or peripheral device/function 312 coupled to USB multi-host device controller 108." *Id.* at 4:15–18. The '243 patent further discloses:

> In one set of embodiments, USB multi-host device controller 108 may be configured with an internal arbitration mechanism that may permit each host-first host 102 and second host 104, for example-to access shared peripheral function 312 by either interleaving host accesses, or by using a common request/grant structure that may hold-off one host while another host completes a data transfer to/from shared device/function 312. The selection of the specific mechanism used may be configured according to the specific USB device type that is being shared. In one set of embodiments, the bandwidth from shared peripheral device/function 312 to each host may be reduced in order to allow each host equal access. In other embodiments, the bandwidth may not be reduced if the bandwidth of the peripheral function exceeds the bandwidth of the host.

Id. at 4:19–33.

C. Illustrative Claim

Claims 1, 3, 7, 18, and 23 are the independent claims of the '243 patent. Independent claim 1, reproduced below, is exemplary of the challenged claims (with some formatting changes for readability):

> 1. A USB multi-host device comprising:
>
> first and second upstream ports configured to couple to corresponding first and second hosts;
>
> a USB device block corresponding to at least one function[4]; and

[4] A Certificate of Correction issued for this patent changing two occurrences in claim 1 of "USB device/function" to "USB device block corresponding to at least one function." Ex. 1001, 9.

a multi-host device controller coupling the USB device block corresponding to at least one function to the first and second upstream ports,

wherein the multi-host device controller is configured to establish concurrent respective dedicated USB connections between the USB device block and the first and second upstream ports, to allow the corresponding first and second hosts to:

simultaneously request access to the USB device; and

alternately access the USB device block to use the at least one function without either one of the first and second hosts reconfiguring the USB device block each time a different one-of the first and second hosts is given access to the USB device block to use the at least one function.

D. Alleged Grounds of Unpatentability

The Petition sets forth the following asserted grounds of unpatentability:

Reference(s)	Basis	Challenged Claims
Furukawa[5]	102(b)	1–8, 10, 11, 15–20, and 22–25
Dickens[6]	102(b)	1–8, 11, 15–20, and 22–25
(Furukawa or Dickens) and Chen[7]	103(a)	9, 11–14, and 21

[5] Japanese Patent Application Publication P2003-256351A. Ex. 1002 ("Furukawa"). Exhibit 1002 includes an English translation of the Japanese publication, a certification by the translator, and the original Japanese language version of the publication.
[6] U.S. Patent No. 6,549,966 B1. Ex. 1003 ("Dickens").
[7] U.S. Patent No. 7,073,010 B2. Ex. 1005 ("Chen").

Reference(s)	Basis	Challenged Claims
(Furukawa or Dickens) and USB 2.0[8]	103(a)	9, 11–14, and 21
Wurzburg,[9] Osakada,[10] and (Furukawa or Dickens)[11]	103(a)	1–25
(Furukawa or Dickens), USB 2.0, APA[12], and "other art cited herein" (Pet. 5)	103(a)	1–25

II. ANALYSIS

A. General Principles

1. Anticipation

To establish anticipation, each and every element in a claim, arranged as recited in the claim, must be found in a single prior art reference. *Net MoneyIN, Inc. v. VeriSign, Inc.*, 545 F.3d 1359, 1369 (Fed. Cir. 2008); *Karsten Mfg. Corp. v. Cleveland Golf Co.*, 242 F.3d 1376, 1383 (Fed. Cir. 2001). Each element of the challenged claim must be found, either expressly or inherently, in the single prior art reference. *Verdegaal Bros., Inc. v. Union Oil Co. of Cal.*, 814 F.2d 628, 631 (Fed. Cir. 1987). While the elements must be arranged or combined in the same way as in the claim, "the reference need not satisfy an *ipsissimis verbis* test," i.e., identity of terminology is not required. *In re Gleave*, 560 F.3d 1331, 1334 (Fed. Cir. 2009); *In re Bond*, 910 F.2d 831, 832 (Fed. Cir. 1990). Furthermore, "a

---

[8] Universal Serial Bus Specification Rev. 2.0 April 27, 2000. Ex. 1004 ("USB 2.0").
[9] U.S. Patent Publication No. 2006/0059293 A1. Ex. 1026 ("Wurzburg").
[10] U.S. Patent No. 6,308,239 B1. Ex. 1027 ("Osakada").
[11] We note Petitioner's harmless error in misidentifying the Osakada reference as Exhibit 1026 ("E1026"). Pet. 4.
[12] Petitioner identifies Admitted Prior Art ("APA") as disclosure at column 1, line 19 through column 2, line 2 of Exhibit 1001. Pet. 7–9.

reference can anticipate a claim even if it 'd[oes] not expressly spell out' all the limitations arranged or combined as in the claim, if a person of skill in the art, reading the reference, would 'at once envisage' the claimed arrangement or combination." *Kennametal, Inc. v. Ingersoll Cutting Tool Co.*, 780 F.3d 1376, 1381 (Fed. Cir. 2015) (quoting *In re Petering*, 301 F.2d 676, 681 (CCPA 1962)). Still further, "it is proper to take into account not only specific teachings of the reference but also the inferences which one skilled in the art would reasonably be expected to draw therefrom." *In re Preda*, 401 F.2d 825, 826 (CCPA 1968).

2. Obviousness

A patent claim is unpatentable under 35 U.S.C. § 103(a) if the differences between the claimed subject matter and the prior art are "such that the subject matter[,] as a whole[,] would have been obvious at the time the invention was made to a person having ordinary skill in the art to which said subject matter pertains." *KSR Int'l Co. v. Teleflex Inc.*, 550 U.S. 398, 406 (2007). The question of obviousness is resolved on the basis of underlying factual determinations, including (1) the scope and content of the prior art; (2) any differences between the claimed subject matter and the prior art; (3) the level of skill in the art; and (4) objective evidence of nonobviousness, i.e., secondary considerations. *Graham v. John Deere Co.*, 383 U.S. 1, 17–18 (1966).

3. Level of Ordinary Skill in the Art

Petitioner argues a person of ordinary skill in the art related to the '243 patent would have a Bachelor's Degree in electrical engineering,

computer science, or the equivalent, and would also have "a few to many" years of experience in the design of USB devices as well as familiarity with the USB specifications and protocols. Pet. 6 (citing Ex. 1023 ¶¶ 53–58). Petitioner further argues (*id.* at 7) that Patent Owner admitted the level of ordinary skill when, in prosecution, Patent Owner asserted:

> Applicant further submits that *one skilled in the art (i.e. having appropriate understanding of basic USB design principles as set forth in at least the USB 2.0 specification)* would therefore be enabled by Applicant's specification as detailed above, to build a USB multi-host device controller that enables multiple hosts to access the USB device function without the USB device having to be reconfigured and/or re-enumerated each time a different host accesses the USB device function.

Ex. 1014, 15 (emphasis added). Patent Owner further asserted in prosecution that "one skilled in the art to which the present application pertains would be well informed and well aware of the USB 2.0 specification." Ex. 1014, 41.

In its Response, Patent Owner does not address the level of ordinary skill in the art. *See* PO Resp. *passim*. However, Mr. Knapen testifies, one of ordinary skill at the time of the '243 patent (1) would be familiar with these industry-standard interconnect interfaces; (2) would be familiar with the circuit-level design and implementation of a standard USB device (because Figure 3 of the '243 patent does not disclose the internal structure of its various blocks); (3) will have also been exposed to the various interconnect options for connecting USB hosts and USB devices; and (4) would have a bachelor's degree in electrical or computer engineering (or similar), and at least five years of industry experience in computer peripheral device design. Ex. 2007 ¶¶ 44–46. Mr. Knapen then concludes, "I agree the Board's

determination of the level of ordinary skill in the art is consistent with my assessment, and my opinions consider the level of skill in the art as determined by the Board." *Id.* ¶ 47.

We are persuaded by Petitioner's definition of the level of ordinary skill in the art and we find this definition is commensurate with the level of ordinary skill in the art as reflected in the prior art. *See Okajima v. Bourdeau*, 261 F.3d 1350, 1355 (Fed. Cir. 2001) ("[T]he absence of specific findings on the level of skill in the art does not give rise to reversible error where the prior art itself reflects an appropriate level and a need for testimony is not shown.") (internal quotation marks omitted); *In re GPAC Inc.*, 57 F.3d 1573, 1579 (Fed. Cir. 1995). The parties' respective experts (Mr. Garney and Mr. Knapen) substantially agree regarding the education and experience of persons of ordinary skill at the time of the '243 patent. The parties' experts specifically agree that the person of ordinary skill in the art would have had familiarity with the USB 2.0 specification and experience in the design of USB devices.

Based on the complete record of this trial, we discern no reason to alter our preliminary determination of the level of ordinary skill in the art. Therefore, we define the level of ordinary skill in the art, at the time of the '243 patent, to include at least a Bachelor's degree in electrical engineering, computer engineering, computer science, or equivalent fields as well as familiarity with the USB 2.0 specifications to the extent of having designed a USB device. This definition is reflected in the prior art of record and is consistent with the testimony of both parties' experts and consistent with Patent Owner's admissions during prosecution of the '243 patent.

4. Claim Construction

As a step in our analysis of patentability, we determine the meaning of the claims for this Decision. In an *inter partes* review, a claim in an unexpired patent, as is the case here, shall be given its broadest reasonable construction in light of the specification of the patent in which it appears. 37 C.F.R. § 42.100(b); *see also Cuozzo Speed Techs., LLC v. Lee*, 136 S. Ct. 2131, 2142–46 (2016) (upholding the use of the broadest reasonable interpretation standard).

Under the broadest reasonable construction standard, claim terms are generally given their ordinary and customary meaning, as would be understood by one of ordinary skill in the art in the context of the entire disclosure. *In re Translogic Tech., Inc.*, 504 F.3d 1249, 1257 (Fed. Cir. 2007). "[A] claim construction analysis must begin and remain centered on the claim language itself." *Innova/Pure Water, Inc. v. Safari Water Filtration Sys., Inc.*, 381 F.3d 1111, 1116 (Fed. Cir. 2004). "Though understanding the claim language may be aided by the explanations contained in the written description, it is important not to import into a claim limitations that are not a part of the claim." *SuperGuide Corp. v. DirecTV Enters., Inc.*, 358 F.3d 870, 875 (Fed. Cir. 2004). Only terms that are in controversy need to be construed and only to the extent necessary to resolve the controversy. *See Wellman, Inc. v. Eastman Chem. Co.*, 642 F.3d 1355, 1361 (Fed. Cir. 2011); *Vivid Techs., Inc. v. Am. Sci. & Eng'g, Inc.*, 200 F.3d 795, 803 (Fed. Cir. 1999).

Aside from the following terms we interpret, we determine that it is unnecessary to construe any other claim terms.

a. Concurrent and Simultaneous

Independent claims, 1, 3, 18, and 23 (and their respective dependent claims) recite establishment of "concurrent" connections. Independent claims 1, 3, 7, and 23 (and their respective dependent claims) recite "simultaneous" requests from hosts and claim 23 recites "simultaneous" configuration of the device by multiple hosts. The Specification of the '243 patent does not provide an express definition of either term and "concurrent" does not appear in the '243 patent Specification other than in the claims.

Petitioner does not provide a specific interpretation of either term but argues what is *not* meant by each term. Specifically, Petitioner argues references to "simultaneous" in the claims do "not require simultaneous data transfer from two or more computers to a peripheral such as a printer" but instead encompasses transfer of data from one computer at a time to the peripheral—a mode Petitioner refers to as "data switching" as distinguished from "connection switching" in which a connection is established and disconnected to allow another computer to connect to a peripheral. Pet. 18–19 (citing Ex. 1001, 2:28–37). Petitioner asserts this requirement is consistent with the USB specification. *Id.* at 19.

Petitioner similarly argues connections are "concurrent" to the extent they allow the recited functionality, for example, in claim 1, to allow for simultaneous enumeration and configuration, allow for simultaneous access, and allow for alternating access without reconfiguring or re-enumerating. *Id.* at 19.

Patent Owner presented arguments regarding interpretation of these terms in its Preliminary Response. Prelim Resp. 15–28. Consistent with the

plain and ordinary meaning and consistent with the Specification, in our Decision on Institution, we adopted Patent Owner's dictionary-based definition of *concurrent* to mean "operating or occurring at the same time" and adopted the dictionary-based definition of *simultaneous* to mean "at the same time." Dec. 15.

Patent Owner does not address the construction of these terms in its Response. Although we find merit in Petitioner's suggestions that there are aspects of USB operations that are excluded when interpreting these terms in the context of USB protocols, Petitioner has not provided a proposed interpretation as to what *is* within the scope of a proper interpretation of these terms.

Thus, we perceive no reason on the complete record to change this construction.

b. "USB Device Block Corresponding To At Least One Function"

Independent apparatus claim 1, 3, 7, and 18 each include a recitation of a device block "corresponding to at least one function."

Apart from the claims, the '243 patent Specification does not use the phrase "device block corresponding to at least one function" or even the phrase "device block" and, thus, does not expressly define the phrase. To whatever extent "function" is an element of the claims, neither party proffers an express construction of "function" and we discern no express definition in the '243 patent Specification.

The '243 patent Specification discloses a device is made up of blocks or segments:

> A USB device may be divided into three segments or blocks. The first block may comprise a USB interface that includes the physical (PHY) or digital link, USB Link layer (SIE), and other circuitry necessary to send and/or receive data over the USB. The second block may comprise an Endpoint Buffer Block, which may include the endpoint buffers that are used by the first and third blocks to buffer data and control reads and writes to/from the USB—transferred through the first block—and/or the Peripheral Function—transferred through the third block. The third block may comprise the "Peripheral Function" itself, which may include the circuitry necessary for the specific USB device function, for example an Ethernet Controller, printer, Video Camera, etc.

Ex. 1001, 2:38–50. Nothing in this paragraph (or the rest of the Specification) identifies one of the three segments as a "device block."

The USB specification does not use or define the phrase "device block" but defines "function" broadly as "[a] USB device that provides a capability to the host, such as an ISDN connection, a digital microphone, or speakers." Ex. 1004, 34. Thus, according to the USB specification, a "function" is a type of "USB device."

The parties essentially agree to a construction of "USB device block corresponding to at least one function" as meaning "a segment of a device that performs a function." Pet. 30; PO Resp. 17–18.

Based on the parties' agreed upon construction and within the scope of the broader definition in the USB specification, we determine "USB device block corresponding to at least one function" is equivalent to the term "function" (*see* Pet. 30–31) and we construe these terms to mean "a USB device, or a segment of a USB device, that performs a USB function to provide a capability to a host."

c. "Shared USB Device Block" / "Shared USB Device"

Claim 23 recites accessing a "function of the shared USB device block."

Based on the above discussion, a "shared USB device block" is, therefore, a "shared" function. As above, neither the phrase "shared USB device block" nor "device block" are used in the Specification of the '243 patent apart from the claims. Patent Owner proffers a construction of this term to mean "a segment of a device . . . shared or accessible by two or more USB hosts." PO Resp. 19–20.

The Specification uses the term "share" (or derivatives thereof) as an or verb to describe a number of objects "shared USB device" (Ex. 1001, Abstract, 2:29); "share a single device/function" (*id.* at 2:15–16); "a single USB device may be shared" (*id.* at 2:9–10); "the USB device that will be shared" (*id.* at 2:56–57); "shared Peripheral Device" (*id.* at 2:62); "the shared device" (*id.* at 2:65); "USB device type that is being shared" (*id.* at 2:67); "shared peripheral function" (*id.* at 3:1); "share devices" (*id.* at 3:45); "printer 120 shared by personal computer (PC) 122 and PC 123" (*id.* at 3:54–55; "shared peripheral function 312" (*id.* at 4:22); "shared device/function 312" (*id.* at 4:25); "USB device type that is being shared" (*id.* at 4:28); and "shared peripheral device/function 312" (*id.* at 4:29). In all cases, the things that are sharing the "shared" objects are multiple hosts (e.g., multiple PCs). However, these various recitations refer to sharing of the "device" as a whole as well as sharing of some portion (e.g., a segment or block) of the device (e.g. "peripheral function," "peripheral function 312," "peripheral device/function 312"). As discussed above, we understand

"device block" to include a block or segment referred to as a "function" or "function block."

Of the above references to shared objects, those that refer to sharing of the "function" or "device/function," in particular block 312 of Figure 3, appear to be consistent with the references in claim 23 to a "shared USB device block." Thus, we construe "shared USB device block" means a "function" (as discussed above) that is "shared or accessible by two or more USB hosts."

Claim 18 recites "a shared USB device . . . wherein the USB device corresponds to at least one function." Thus, claim 18 does not refer to a block or segment that is shared but, rather, refers to the entire device as being shared. The entire device then "corresponds to at least one function," but it is not the "function" that is shared in claim 18—it is the entire device that is shared.

d. "Device" / "USB Device" / "USB Multi-Host Device"

The parties disagree as to the proper interpretation of the term *device*. The preambles of independent apparatus claims 1, 3, and 23 recite a "USB multi-host device." The preambles of independent apparatus claim 7 and independent method claim 18 each recite a "device." Subsequent references in these independent claims and in various dependent claims refer back to the claimed device as a "USB device," "Shared USB device," or simply "device." The '243 patent Specification similarly uses various of these terms interchangeably. We view these various terms as synonymous.

The parties disagreement, in essence, centers around packaging—specifically, whether a "device," as claimed, must be integral/unitary in that

the recited components are physically housed within the claimed device or can be a collection of physically separate, distinct components operating together to provide the recited functions.

Petitioner argues "device" means "both hubs and functions, in a single one or a collection of hardware components." Pet. 32 (citing Ex. 1023 ¶ 67); *see also* Ex. 1004, 32. Patent Owner's Response does not specifically construe the term "device." However, its Response argues Dickens does not disclose the devices of claims 1, 3, 7, and 23 because the Petition merely identifies separate elements disclosed in Dickens rather than a device (i.e., an integral device comprising recited components). PO Resp. 23–24. Implied in Patent Owner's Response regarding Dickens is a construction of "device" as a single, integral, device as distinct from a collection of separate, distinct, components.

The USB specification provides a definition of "device" as follows:

> A logical or physical entity that performs a function. *The actual entity described depends on the context of the reference*. At the lowest level, device may refer to a single hardware component, as in a memory device. At a higher level, it may refer to a collection of hardware components that perform a particular function, such as a USB interface device. At an even higher level, device may refer to the function performed by an entity attached to the USB; for example, a data/FAX modem device. *Devices may be physical, electrical, addressable, and logical*.
>
> When used as a non-specific reference, a USB device is either a hub or a function.

Ex. 1004, 32 (emphasis added). Thus, the USB specification defines "device" relative to the context of the reference—lowest level, higher level, even higher level. Furthermore, we understand that the broadest reasonable interpretation of a term must be consistent with the specification of the

patent. *SuperGuide*, 358 F.3d at 875. Therefore, for the reasons discussed below, the '243 patent Specification does not require a "device" to be a unitary, integral device. The USB specification provides further evidence, consistent with the Specification, that a skilled artisan would have understood the term "device" to encompass either a "single hardware component" or "a collection of hardware components that perform a particular function." Ex. 1004, 32.

Patent Owner presents arguments regarding construction of "device" as follows:

1. Preamble Is Not Limiting

Patent Owner argues the preamble of the claims limits the understanding of "device" because it recites a "particular structure that is highlighted as important by the Specification" and because the preamble "provides antecedent basis for a claim limitation." PO Sur-Reply 1 (citing *NTP, Inc. v. Research In Motion*, 418 F.3d 1282, 1305 (Fed. Cir. 2005); *Catalina Mktg. Int'l v. Coolsavings.com*, 289 F.3d 801, 808 (Fed. Cir. 2002); and *Deere & Co. v. Bush Hog, LLC*, 703 F.3d 1349, 1358 (Fed. Cir. 2012)). Petitioner contends the preamble recitation of "device" supports an important highlight of the Specification because the '243 patent Specification discloses a "single USB device . . ." (Ex. 1001, 2:9–12) and distinguishes the invention over "a combination of a standalone switch and another USB device" (Ex. 1001, 1:58–2:2). *Id.* at 1–2.

Petitioner argues the distinction over a prior art switch in combination with a USB device is a distinction based on the function of the switch requiring reconfiguration of the USB device for each switch between hosts

rather than the physical distinction of a combination of separate components. Pet. Sur-Sur-Reply 3 (quoting Ex. 1001, 1:60–62 ("the device can generally be configured and accessed by only a single host at any given time")). We are persuaded by Petitioner's argument. The '243 patent does not distinguish the prior art combination of a switch and a separate USB device based on its physical packaging.

Furthermore, the mere fact that "device" in the preamble provides an antecedent basis for the same recitation in the claim elements in no way further defines the proper construction of "device." Patent Owner's reliance on *Deere* is inapposite. *Deere* also holds "if the body of the claim describes a structurally complete invention, a preamble is not limiting where it 'merely gives a name' to the invention, extols its features or benefits, or describes a use for the invention"). *Deere*, 703 F.3d at 1358 (quoting *Catalina*, 289 F.3d at 809). Here, use of the term "device" (or the various synonyms noted *supra*) provides no structural limitation but, instead, the body of the claim sufficiently defines a complete structure and the preambles merely provide a name for the claimed structures.

For the above reasons, we determine the preamble of the claims does not limit the claim elements to an integral, unitary, physical packaging of the device as Patent Owner alleges.

2. The Claimed Device May Encompass An "Off-The-Shelf Item"

Petitioner argues Patent Owner's limiting definition of "device" would require the function block and the controller be located "within a single unitary housing." Reply 4. However, Petitioner argues, the '243 patent Specification discloses that "Peripheral Device/Function 312" "may

be a standard off-the-shelf item." *Id.* (quoting Ex. 1001, 4:8–12). Petitioner contends that, if the "off-the-shelf" function 312 is, for example, a mass storage device, "[i]t could not be a standard off-the shelf item if the inventive multi-host device controller were already embedded inside." *Id.*

Patent Owner argues the disclosure of an "off-the-shelf" item merely refers to the function being a standard function such as an Ethernet controller or a mass storage device. PO Sur-Reply 2. Instead, Patent Owner emphasizes that the '243 patent Specification clearly refers to the function as one of three segments or blocks within a USB device as support for its contention that the claimed USB device is an integral, unitary structure. *Id.*

We are persuaded by Petitioner's arguments. Figure 3 of the '243 patent (reproduced above) depicts an embodiment of USB multi-host device 106 comprising, *inter alia*, USB multi-host device controller 108 and device/function 312. The Specification's disclosure that device/function 312 may be a standard off-the-shelf item such as an Ethernet controller or mass storage device clearly describes a typical device that may be common and commercially available—not an item that is already physically integrated with the inventive features of the invention (the other elements shown within box 106 of Figure 3).

For the above reasons, we determine the Specification's exemplary embodiment incorporating an "off-the-shelf" item aids in understanding "device" to encompass a combination of hardware components (including "off-the-shelf" items) and, thus, would not limit the claim elements as to integral, unitary, physical packaging of the device as Patent Owner alleges.

3. "Device" Encompasses "A Collection Of Hardware Components"

Patent Owner further argues the USB specification definition of a device as encompassing a "collection of hardware components" is not the same as encompassing a collection of separate devices. PO Sur-Reply 3. We discern no support for Patent Owner's assertion that there is a difference between a collection of hardware components and a collection of devices. This assertion merely shifts the focus of the discussion to defining another term ("hardware components") as somehow distinct from "devices."

Furthermore, Patent Owner's expert, Mr. Knapen, agrees with the definition of "device" as provided in the USB specification. Ex. 1049, 40:9–16 ("Q. Do you agree or disagree that a person of ordinary skill in USB matters in 2006 would consider the word 'device' to potentially refer to a collection of hardware components that perform a particular function? A. Yes. . . ."). In addition, Patent Owner's counsel and Mr. Garney (Petitioner's expert) engage in a lengthy colloquy in which Mr. Garney explains a variety of types of devices defined by the USB specification all within the scope of "device," regardless of physical packaging constraints, as ordinary skilled artisans would understand the USB specification. *See* Ex. 2006, 67:9–74:15.

For the above reasons, we determine that an ordinarily skilled artisan would understand "device" in the context of the '243 patent Specification and in the context of the USB specification to encompass devices that comprise the recited "collection of hardware components" without imposing particular physical packaging constraints.

4. Conclusion Regarding Construction of "Device"

Accordingly, we construe "device," in accordance with the USB specification and in accordance with the '243 patent Specification discussion of Figure 3, to, at least, encompass any collection of hardware components that perform a USB function.

e. "USB Connections"

With slight variations in phrasing, all independent claims (1, 3, 7, 18, and 23) recite USB connections between the first host (or upstream port) and the function (claims 1, 3, 7, and 23 refer to the "USB device block corresponding to at least one function" and method claim 18 refers to USB connections between the "shared USB device" and a plurality of hosts). The parties disagree over the construction of "USB connection" and then further disagree regarding the construction of "concurrent" and "dedicated" as qualifiers of the "USB connections" (as discussed further below). First we address the construction of "USB connection."

The USB specification does not expressly define the term "USB connection" but uses the term only in reference to the electrical signaling standard (the type of cable) used in various speeds of connectivity. *See* Ex. 1004, 147, 152, 157. The '243 patent Specification does not expressly define the term "USB connection." The term appears in the Abstract and at column 2, lines 35–37 ("[e]ach host may therefore establish a dedicated USB connection with the sharing device"). These passages offer little aid in

understanding the term and only indicate that a "USB connection" is something established between hosts and a "sharing device[13]."

Neither the Petition nor the Patent Owner's Response provide a definition of "USB connection." Patent Owner argues in its Response, in essence, that Dickens does not disclose the claimed USB connections because Dickens discloses that, internal to its routing device 100, all exchanges are performed over a PCI bus (or another non-USB bus). PO Resp. 29–35. Implied in Patent Owner's argument is that the claimed "USB connections" would be understood to exclude the use of any non-USB busses or protocols in the path between, e.g., a host and a peripheral—even intervening connections in the path between a USB host and a USB device.

In response to Patent Owner's argument, Petitioner proffers an express construction of "USB connection" in its Reply. Specifically, Petitioner argues "'USB connection' means 'direct and indirect connection, both with and without intervening interconnect, using USB protocols.'" Reply 11. Petitioner further argues the '243 patent Specification teaches that the USB connections may include digital interconnects such as "Interchip USB," "ULPI," and "UTMI" and contends Mr. Knapen (Patent Owner's expert) testified that connections within multi-host device 106 of the '243 patent are likely such digital interconnects, which Petitioner contends are not "USB signals." *Id.* at 5–6 (citing Ex. 2007 ¶¶ 44–47; Ex. 1049, 62:13–

[13] "Sharing device" is not used again in the Specification. We presume it may have been a typographic error that was intended to refer to a "shared device," a term that is somewhat consistent with the remainder of the Specification and the claims of the '243 patent. Our analysis is not affected by the apparent error.

62:25). Thus, under Petitioner's proffered construction, a "USB connection" may include intervening digital interconnections that are not USB compliant.

Patent Owner responds, "The phrase 'USB connection' should be given its plain and ordinary meaning. One of ordinary skill would know that a 'USB connection' is one that conforms to the requirements of the USB specification." PO Sur-Reply 3. Patent Owner argues its interpretation is consistent with the '243 patent Specification because the interconnects discussed in the Specification, including serial USB cables, Interchip USB, ULPI, and UTMI standards, *are* compliant with the USB specification. *Id.* at 3–4. Patent Owner further argues Petitioner's proffered construction includes non-USB intervening elements and, thus, does not conform to the USB specification. *Id.* at 4–5.

We are persuaded by Petitioner's arguments that a "USB connection" need not be compliant with the USB specification throughout the entire physical signaling path between a USB host and a USB device and may include intervening, non-USB connections.

First, we disagree with Patent Owner that the disclosed digital interconnections of the '243 patent (Interchip USB, ULPI, and UTMI) are "compliant with the USB specification." These standards may be useful in conjunction with USB circuit design applications for high speed parallel bus communications between integrated circuits,[14] but these interconnect standards appear nowhere in the USB specification of record and, thus,

---

[14] Patent Owner provides a footnote alleging these digital interconnects conform to the USB specification. *See* PO Sur-Reply 4 n.1. The cited websites, not of record as evidence in this case, suggest that these standards define parallel bus structures useful in implementing USB devices with inter-chip connections.

cannot be said to be "compliant" with the USB specification of record as Exhibit 1004.

Furthermore, Mr. Knapen testifies, and we agree, "the inner-workings of the invention's USB multi-host device controller (i.e., element 108 of Figure 3) is not described at the circuit level." Ex. 2007 ¶ 45. Mr. Knapen further testifies, in reference to internal connections within controller 108 of the '243 patent, that connections within multi-host device 106 of the '243 patent are likely digital interconnects (e.g., Interchip USB, ULPI, UMTI) rather than "USB signals" on a USB serial bus (i.e., a USB cable). Ex. 1049, 76:19–78:24. Thus, interconnections within multi-host device 106 are not compliant with the USB specification of record (Ex. 1004) as alleged by Patent Owner. Instead, Figure 3 of the '243 patent, in conjunction with the disclosure of digital interconnects and Mr. Knapen's testimony, discloses a "USB connection" that comprises a USB serial bus (i.e., a USB cable) coupling a USB host with an upstream port (302/304) and digital interconnects ("Host 1" and "Host 2") coupling the upstream port (302/304) to a corresponding endpoint & status buffer (306/308) within device 106.[15] Thus, according to Mr. Knapen, the above-described "USB connection" between a host and function 312 in Figure 3 includes intervening digital interconnections that are not compliant with the USB specification of record.

[15] Other un-labeled interconnects within device 106, such as between buffers 306/308 and controller 108, may also be digital interconnections that are not compliant with the USB specification of record.

Furthermore, we observe that the ’243 patent Specification, although sparse regarding any internal structure of controller 108,[16] discloses that controller 108 may include an arbitration mechanism:

> In one set of embodiments, USB multi-host device controller 108 may be configured with an internal arbitration mechanism that may permit each host—first host 102 and second host 104, for example—to access shared peripheral function 312 by either interleaving host accesses, or by using a common request/grant structure that may hold-off one host while another host completes a data transfer to/from shared device/function 312.

Ex. 1001, 4:19–26. Neither party identifies, nor do we discern, any disclosure in the USB specification describing a capability to arbitrate among multiple host requests—indeed adding such a feature is at the heart of the purported invention of the ’243 patent (i.e., the “point of novelty”). Thus, controller 108 provides non-USB functionality (an arbitration mechanism), intervening within the USB connection between hosts and a function block, to arbitrate among multiple USB requests.

For the above reasons, we are persuaded by Petitioner’s arguments that “USB connection,” as used by the ordinarily skilled artisan in the ’243 patent, does not require an end-to-end communication path that is, at all times and all points, compliant with the USB specification of record. Instead, we adopt Petitioner’s proffered construction that a “USB connection” means “direct and indirect connection, both with and without intervening interconnect, using USB protocols.”

---

[16] In general, we find the ’243 patent Specification to be more sparse regarding design details than the prior art of record, in particular Dickens.

f. "Dedicated" USB Connections

All independent claims, with slight variations in phrasing, refer to the USB connections as "dedicated." Initially, we determine a "dedicated" USB connection is first and foremost a "USB connection" as defined above ("direct and indirect connection, both with and without intervening interconnect, using USB protocols"). What structure makes the connections "dedicated" is a point of disagreement between the parties.

Neither the Petition nor the Patent Owner Response expressly define "dedicated USB connections." Patent Owner's Response, in arguing that Dickens does not teach "dedicated USB connections," implies a construction that requires there must be two distinct, separate, physical communications paths from each of two hosts through to the function block (i.e., no segment of the communication path of the first "dedicated" USB connection is shared with the other "dedicated" USB connection). PO Resp. 40–43.

Petitioner disagrees with Patent Owner's implied construction arguing that the '243 patent Specification supports a construction that allows for some shared physical communication segments in a "dedicated USB connection." Reply 11–12. Specifically, Petitioner proffers a construction of "dedicated USB connections" as meaning "a form of connection, with a communication channel that is assigned to two or more locations, and which may include a shared connection." Reply 12. In support of this interpretation, Petitioner points to Figure 3 of the '243 patent that shows a single arrow connecting controller 108 to function block 312 suggesting a single shared physical communication path. *Id.*

In supplemental briefing, Patent Owner reiterates its position that the plain meaning of "dedicated" connections requires that there be two distinct,

separate, physical communication paths with no shared segments because an interpretation including a shared segment would eviscerate the term "dedicated" in the claims. PO Sur-Reply 10. Responsive to Petitioner, Patent Owner argues Figure 3 of the '243 patent is a "logic diagram" and, thus, the single arrow Petitioner points to connecting controller 108 with function block 312 is not a single shared physical communication link. *Id.* (quoting Ex. 1001, 3:20–21). Petitioner responds "[c]laim 3 also does not speak to the physical, but the schematic, *i.e.*, functional; the whole of the patent's disclosure is schematic." Pet. Sur-Sur-Reply 10. Petitioner contends "dedicated" does not mean physically separate and, therefore, does not preclude a shared segment in the "dedicated USB connection" path. *Id.*

We are persuaded by Petitioner's position as supported by the disclosed embodiments of the '243 patent—specifically, the only embodiment disclosed in particular in Figure 3. The '243 patent Specification provides some insight, disclosing:

> In various embodiments, by using a multi-host capable device controller, a shared USB device may be simultaneously configured and accessed by two or more USB hosts. The multi-host capable device may include separate buffers for each host, and may be configured with the capability to respond to USB requests from more than one host. The device may maintain a dedicated address, configuration and response information for each host. Each host may therefore establish a dedicated USB connection with the sharing device.

Ex. 1001, 2:28–37. Thus, in at least some embodiments, "dedicated USB connections" include USB connections in which the USB multi-host device "includes separate buffers for each host" and "maintains dedicated address, configuration and response information for each host." Furthermore, in prosecution of the '243 patent, Patent Owner argued "the embodiment

disclosed in Fig. 3 clearly shows concurrent respective dedicated connections established between USB multi-host device controller 108 and upstream ports 302 and 304 through buffers 306 and 308, respectively." Ex. 1014, 10. Figure 3 of the '243 patent is reproduced below with our red annotation added to highlight the above-identified "dedicated" USB connection.

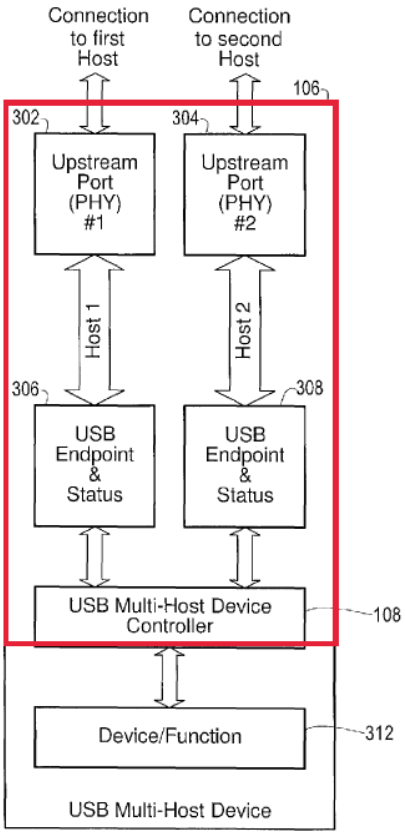

FIG. 3

Figure 3 of the '243 patent, above, is annotated with a red box highlighting two communication paths Patent Owner identified during prosecution as "dedicated" USB connections—one from the first host through upstream port 302 and USB endpoint & status 306 to controller 108 and a second from the second host through upstream port 304 and USB endpoint & status 308 to controller 108. These two communication paths,

according to the prosecution history (Ex. 1014, 10), establish two dedicated connections up to controller 108. From those two dedicated connections from two hosts to controller 108, there is shown a single arrow (outside our annotated red box identifying the dedicated connections), suggesting a single connection from controller 108 to function block 312—a single connection shared by the two highlighted dedicated connections to extend the connections to function block 312.

The above-highlighted, exemplary, "dedicated" USB connections fit within the scope of Petitioner's proffered construction of "dedicated USB connections" in that they may include a shared segment or portion of the communication path that extends the dedicated connection to the function block. These exemplary "dedicated" USB connections are also within the scope of the '243 patent Specification in that each of the two dedicated connections "includes separate buffers for each host" (endpoint buffers 306 and 308) and "maintains dedicated address, configuration and response information for each host" (within endpoint buffers 306 and 308). *See* Ex. 1001, 4:10–18.[17]

Finally, independent claim 1 is the only claim that requires two physical ports. Every other independent claim recites multiple "dedicated" connections, but does not recite multiple physical ports. This suggests these claims are broad enough to encompass multiple "dedicated" connections over a single physical port and, therefore, provides further support for

[17] The '243 patent Specification does not expressly describe what information is stored in buffers 306 and 308. However, we are persuaded the ordinarily skilled artisan with knowledge of the USB specification would likely presume the address, configuration, and response information is stored in these buffers.

Petitioner's position that "dedicated," as used in the '243 patent, does not require an entirely separate physical communication path.

For the above reasons, we construe a "dedicated USB connection" to mean "a USB connection that may include some shared physical communication path and includes a buffer for maintaining dedicated address, configuration and response information for the connection."

g. "Concurrent" USB Connections

All independent claims, with slight variations in phrasing, refer to the USB connections as "concurrent." Initially, we determine each "concurrent" USB connection is first and foremost a "USB connection" as defined above ("direct and indirect connection, both with and without intervening interconnect, using USB protocols"). We have construed "concurrent" above to mean "operating or occurring at the same time." Thus, we construe "concurrent USB connections" to be "USB connections that operate or occur at the same time."

C. Anticipation by Furukawa

The Petition asserts claims 1–8, 10, 11, 15–20, and 22–25 are anticipated by Furukawa. Pet. 37–53. For the reasons discussed below, we remain unpersuaded that Furukawa anticipates any of claims 1–8, 10, 11, 15–20, and 22–25.

1. Furukawa (Ex. 1002)

According to Furukawa, sharing a USB peripheral device has been difficult because a USB interface permits only a single host to connect with

a peripheral device. Ex. 1002 ¶ 3. Prior solutions provided a switching circuit that allowed a different host to connect with the shared peripheral. *Id.* However, such switches required a series of operations each time the host on the USB was switched and, typically, required the host system to load or unload a device driver for the shared peripheral newly connected or re-connected to the host. *Id.*

Furukawa purports to have resolved the above problems by disclosing a USB hub providing dedicated ports for each of multiple USB hosts, dedicated ports for each of multiple USB peripheral devices, and a controlling circuit coupled between the host ports and the device ports such that overhead to load and unload devices drivers is obviated. *Id.* ¶ 4.

Figure 1 of Furukawa, reproduced below, depicts an exemplary embodiment of Furukawa's invention.

FIG. 1

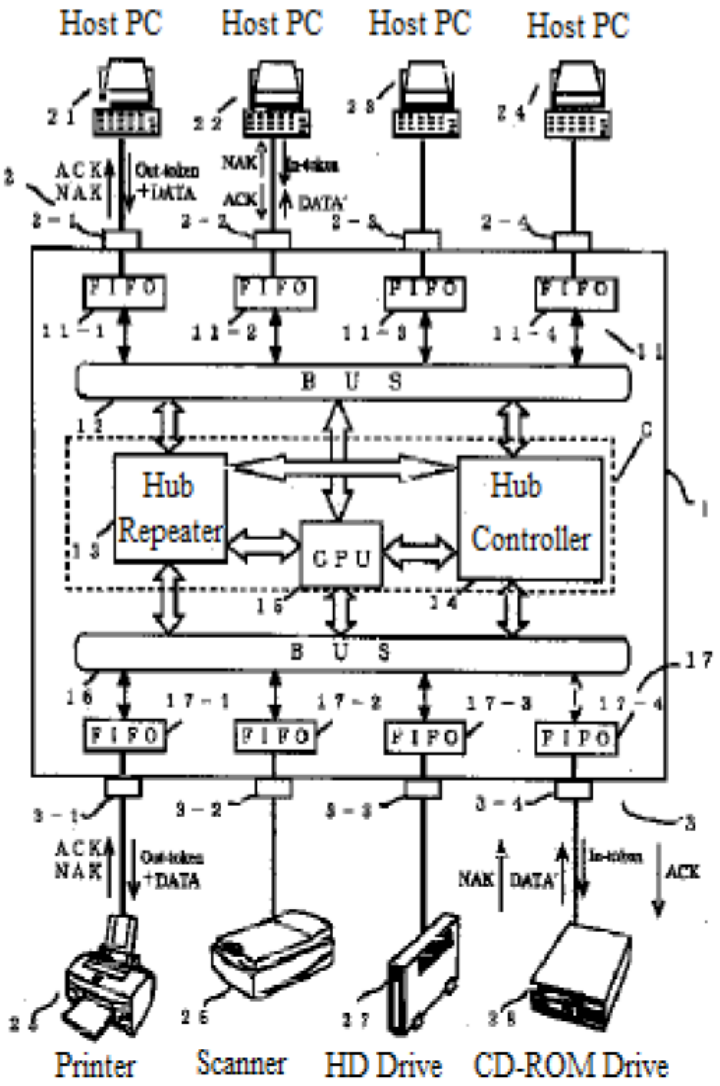

Figure 1 depicts a plurality of USB hosts 21–24 coupled to hub 1 via corresponding ports 2-1 through 2-4 (collectively ports 2) and depicts a plurality of USB peripheral devices 25–28 coupled to hub 1 via ports 3-1 through 3-4 (collectively ports 3). *Id.* ¶¶ 7–8. Hub 1 comprises FIFO memories 11-1 through 11-4 (collectively FIFO memories 11) and 17-1

through 17-4 (collectively FIFO memories 17) corresponding to ports 2 and 3, respectively. *Id.* Controlling circuit C of hub 1 controls transmissions between hosts 21–24 via bus 12 through FIFO memories 11 and peripheral devices 25–28 via bus 16 through FIFO memories 17. *Id.* ¶¶ 10–11. When an exchange is required between a host and a peripheral device, controlling circuit C sets up a connection between the host and the peripheral device and releases the connection when the exchange is completed. *Id.*

2. Independent Claims 1, 3, 7, 18, and 23

Independent apparatus claims 1, 3, 7, and 23 generally recite a USB device comprising a controller that enables multiple hosts to share access to a USB device. Independent method claim 18 generally recites steps providing multiple hosts with shared access to a USB device.

Regarding claim 1, Petitioner argues the recited USB multi-host device reads on hub 1 of Furukawa and the claimed first and second upstream ports read on any two of ports 2-1 through 2-4 of Furukawa. *Id.* at 38–39.

Petitioner argues the recited "USB device block corresponding to at least one function" reads on any of Furukawa's peripheral devices. *Id.* at 39 (citing Ex. 1002 ¶ 9, Fig. 1). In further analysis we may refer to "USB device block corresponding to at least one function" as simply "function" or "function block."

Petitioner further argues the claimed multi-host device controller reads on Furukawa's controlling circuit C within hub 1. *Id.* at 39.

The "wherein" clause of claim 1 requires that the controller be configured to "establish concurrent respective dedicated USB connections

between the [function block] and the first and second upstream ports" to enable certain recited functions. Petitioner argues controlling circuit C of Furukawa connects to multiple hosts concurrently "through bus 12, FIFO memories 11, and connecting ports 2." Pet. 40 (citing Ex. 1002 ¶¶ 9–10). Petitioner further argues elements 13–15 within controller circuit C allow the circuit "to simultaneously process data transmissions between the hosts and peripheral devices." Pet. 40–42 (citing Ex. 1002 ¶ 11). More specifically, Petitioner argues:

> As Furukawa explains, "The connection that is set up is a one-to-one connection between the host PC that is the source of the request and the peripheral device that is the destination of the request, and insofar as there is no redundancy in the request destination, a plurality of host PCs can access the peripheral devices simultaneously." F-¶0010. Furukawa's controlling circuit thereby discloses "concurrence." Garney-¶¶81-82.

Id.[18]

Patent Owner' Preliminary Response disputed Petitioner's contentions arguing, in essence, that Furukawa does not disclose multiple hosts concurrently accessing the same peripheral device. *See* Prelim. Resp. 35–40.

Based on the preliminary record at the time of our Decision on Institution, we were not persuaded Furukawa expressly discloses concurrent USB connections between a plurality of USB hosts and *one* USB peripheral device (a "USB device block . . ." as claimed). Although identity of terminology is not required, the Petition had not presented sufficiently

[18] Petitioner's notation "F-¶0010" is a reference to Ex. 1002 ¶ 10 and the notation "Garney-¶¶81-82" is a reference to Ex. 1023 ¶¶ 81–82. *See* Pet. 1 n.1.

persuasive argument and evidence that Furukawa expressly discloses such concurrency. The Petition's reliance on Furukawa's disclosure that "a plurality of host PCs can access the peripheral devices simultaneously" (Ex. 1002 ¶ 10) does not sufficiently disclose concurrent connections between multiple USB hosts and *the same* shared USB peripheral device. As we discussed in our Decision on Institution, this disclosure of Furukawa may reasonably be understood to disclose that one USB host is accessing a first USB peripheral device while simultaneously a second USB host is accessing a different USB peripheral device—e.g., Furukawa's host 21 may access device 25 while host 22, simultaneously, accesses device 26. Thus, in our Decision on Institution, we were not persuaded that Furukawa expressly discloses establishing concurrent connections between multiple hosts and one shared peripheral device and we observed Petitioner had not presented any argument that the recited concurrent connections would have been inherent in the teachings of Furukawa. Dec. 22–23. For those reasons based on the preliminary record, we were not persuaded Furukawa discloses, expressly or inherently, the concurrent connections by multiple hosts to one peripheral device as recited in independent claim 1 and as similarly recited in each other independent claim (3, 7, 18, and 23) for which Petitioner presented similar arguments (*see* Pet. 45–53).

Petitioner filed a Request for Rehearing of our Decision on Institution. Paper 15 ("Req." or "Request"). In that Request, Petitioner argued that Furukawa's disclosure that a peripheral device may be coupled to multiple hosts with "no switching operations" teaches that the connections are made without a need for reconfiguration or re-enumeration as required by the claims. Req. 10 (quoting Ex. 1002 ¶ 3). Petitioner argued that because

Furukawa shows switching between USB connections without any physical switches and still obviates the need to unload and reload drivers when switching connections, Furukawa must be using "data switching" rather than physical "disconnection switching" as the Petitioner defined those terms in its Petition. *Id.*; *see also* Pet. 18–19. We emphasized in our Decision Denying Petitioner's Request for Rehearing that our Decision on Institution was based on lack of *express* disclosure in Furukawa of establishing/maintaining multiple concurrent USB connections that enable alternate access to a shared function block without reconfiguring as required by the claims. Paper 18, 5–6 (citing Dec. 23).

Following entry of our *SAS* Order (adding previously denied claims and grounds into the trial), the parties submitted supplemental briefs addressing the claims and grounds for which we had initially denied review. We emphasize, as discussed above, that Petitioner does not argue that Furukawa inherently discloses any of the claimed features. Instead, the Petition and Petitioner's Supplemental Reply argue only that Furukawa *expressly* teaches the features of claims 1–8, 10, 11, 15–20, and 22–25. At oral argument, Petitioner's counsel confirmed that the Petition is not relying on inherent disclosures of Furukawa.

> JUDGE FISHMAN: The Patent Owner was asserting that Petitioner has never argued inherency, and still does not argue inherency. Are you arguing inherency, or are you not arguing inherency?
>
> MR. McKEOWN: We did not present inherency in the petition. The word inherency, I think first appeared in the rehearing decisions. Our position is enumeration reconfiguration is disclosed in Furukawa for the same reasons it's disclosed in Bohm. Going back to that prosecution history, when you're explaining enumeration and configuring is necessarily there,

> because there's two hosts transmitting at once, and because they transmit at once, they don't have to be re-enumerated, we are entitled to that same technical basis as they are. That's what they argued.
>
> In addition to that, and as I pointed out earlier, enumeration configuration relates to the loading of drivers, that's not in dispute, that's on the Petitioner page 34 th[r]ough 35; Furukawa explicitly explains that it's avoiding switching overhead. It's avoiding the loading the drivers, and even in the USB context, it's able to share a peripheral.
>
> Based upon the testimonial evidence we have in the record, our declarant has taken the position that enumeration and all of the features of these claims are in the reference. We are not saying, by the way, if you enumerate, you have to do this other step that's nowhere discussed, and that's inherent, we are not arguing that. We are saying, it's in there. The word "enumeration" is just not used; instead, they describe it as switching drivers, et cetera.

Tr. 54:14–55:10.

In its Supplemental Reply, Petitioner argues Furukawa discloses that its FIFO buffers (11 and 17) temporarily store packet data "to prevent collisions of data from multiple hosts." Supp. Reply 4 (citing Ex. 1002 ¶¶ 6, 17). Petitioner then contends "collisions of data would not even be a concern if Furukawa disclosed that a peripheral could *only* be configured/enumerated with one host at a time." *Id.* Furthermore, Petitioner contends our Decision on Institution is inconsistent with the explicit disclosure in Furukawa of a "system in which multiple hosts simultaneously access a single peripheral." *Id.* Specifically Petitioner contends Furukawa discloses problems of prior art switches used to share a peripheral device among multiple hosts in that "the switching circuit must be operated in a series of operations" each time a different host is switchably connected. *Id.*

at 5 (quoting Ex. 1002 ¶ 3). Petitioner quotes a portion of paragraph 3 of Furukawa and summarizes these teachings as, "the prior art switching is undesirable because it involves a series of operations, and drivers for the one peripheral device must be loaded and unloaded each time the switching from one connected host to another connected host is performed." *Id.* at 5–6. Petitioner then contends that loading and unloading of drivers is a "conventional" operation of USB hubs and controllers and further contends enumeration of a USB device is similarly a conventional switching operation of USB hubs and controllers. *Id.* at 6. Petitioner further contends Furukawa's proposed solution is "to provide a USB hub that enables **a** peripheral device to be shared by a **plurality** of computers, and which requires **no [conventional USB] switching operations**." *Id.* (quoting Ex. 1002 ¶ 3 with the words "conventional USB" added by Petitioner). Based on the above disclosures, Petitioner contends:

> As noted above, switching operations include the loading and unloading of the drivers for the peripheral device and take extensive time. By eliminating switching operations, Furukawa's invention—described at the same level of detail as the '243 patent—results in persistent simultaneous connections between the peripheral device and a plurality of hosts (because the connections do not have to be setup each time), such that "there is **no overhead and having to load and unload the device driver** sequentially **each time** . . . a connection is established or released." (Ex. 1002 ¶ 5; emphasis added.) Thus, with the peripheral's drivers always loaded, the simultaneously connected hosts are always in a ready state to send data to, or receive data from, a given peripheral. Indeed, Furukawa's description of its FIFO memory exchanges is indisputable evidence of this simultaneous access.

Id. at 6–7.

In response, Patent Owner argues Furukawa discloses only a "one-to-one" connection between one host and one device and discloses that "simultaneous access to peripherals only occurs when two hosts request access to different 'request destination[s]' (i.e., two different peripherals)." Supp. Resp. 1–2. Patent Owner further argues, "Furukawa's use of FIFOs does not change that it only establishes one-to-one connections." *Id.* at 2. Contrary to Petitioner's argument, Patent Owner contends collisions could arise even in such a one-to-one connection system in which one host at a time connects to the device and then another host can connect to the same device but only after the first connection is released. *Id.* at 3. Therefore, Patent Owner argues, by virtue of each connection being "released" before a next connection is allowed, enumeration and configuration would occur at each switch between hosts—contrary to the recitations of the claims. *Id.* at 3–4.

We remain unpersuaded by Petitioner's supplemental arguments. We agree with Petitioner that Furukawa is directed to solving the same problem as the '243 patent—eliminating overhead of switching between hosts sharing a USB device. Supp. Reply 6 (citing Ex. 1002 ¶ 3 ("The present invention was created in contemplation of the problem areas described above, and the object is to provide a USB hub that *enables a peripheral device to be shared by a plurality of computers, and which requires no switching operation*.") (emphasis added)). Furukawa discloses a problem of prior art switches in that "the switching circuit must be operated in a series of operations" for each switch between connected hosts. Ex. 1002 ¶ 3. Furthermore, Furukawa discloses one such operation asserting that in the prior art "the device driver for the peripheral device must be loaded and unloaded" for

each switch between connected hosts. *Id.* However, the only switching operation overhead expressly eliminated in Furukawa is the overhead of loading and unloading devices drivers on the hosts each time a switch is made between two hosts sharing a USB device. *Id.* ¶ 5. Furukawa never expressly discusses elimination of any other type of switching operation overhead by its invention. In particular, we discern no express disclosure in Furukawa that reconfiguration of the peripheral device is eliminated when switching between hosts as required by the independent claims (1, 3, 7, 18, and 23).

Petitioner asserts that the ordinarily skilled artisan would recognize that Furukawa's disclosed "series of operations" or "switching operations" encompasses all overhead operations and, thus, would have understood these operations to include enumeration when a switch is made between connected hosts because such enumeration "is a conventional switching operation of USB hubs" as evidenced by another Japanese patent. Supp. Reply 6 (citing Ex. 1052[19] ¶¶ 4, 17). Mr. Garney testifies,

> Furukawa's entire invention is directed to avoiding the conventional USB switching operations of prior art USB hubs. In light of the whole technical disclosure of Furukawa, a [person of ordinary skill in the art] could not understand Furukawa to describe that "normal enumeration and configuration" still takes place when a host "connection" is released. To take that position does great violence to the disclosure of Furukawa. Significant portions of Furukawa's disclosure would be rendered superfluous, and the expressed design goals could not be met—e.g., the need to eliminate processing time and overhead each time a host is switched. Patent Owner's unsupported attorney arguments lack any technical basis and completely ignore the

[19] Exhibit 1052 is an English translation of Japanese Unexamined Application 2001-51939.

> functionality of Furukawa's controlling circuit, FIFOs, and NAK packets.

Ex. 1053 ¶ 23.

We remain unpersuaded by this argument. Initially, we note Mr. Garney's testimony in this regard is unsupported by any facts or data and, thus, is deserving of little weight.[20] 37 C.F.R. § 42.65(a). Like the Petition, Mr. Garney's Reply Declaration (Ex. 1053) still fails to identify any express disclosure in Furukawa of eliminating re-enumeration processing in switching between connections.

As previously noted, there is no mention of reconfiguration anywhere in Furukawa. There may be reasons Furukawa is silent in this respect. It may be the case that Furukawa determined, for its purpose, elimination of the overhead of loading and unloading drivers on the host was a sufficient improvement over prior art switches and it need not address other elements of overhead processing such as re-enumeration. In fact, we find it notable that Furukawa's use of its FIFO stores data *and an address* of the USB device to which the data is destined and uses that address to determine what host is presently connected to the device (i.e., what host presently has set the address for the device—which as presently enumerated the device). *See* Ex. 1002 ¶¶ 13–15. In Furukawa's invention, it may be that controlling circuit C (comprising hub repeater 13, hub controller 14, and CPU 15) uses the stored address from the FIFO to perform a re-enumeration or reconfiguration on the destination device because a prior connected host used a different address

[20] Mr. Garney's reliance on paragraphs 4 and 17 of Exhibit 1052 provide no support for his assertion that enumeration is among the "conventional" operations that must be performed for each switch between connected hosts. The word "enumeration" never appears in Exhibit 1052.

and a different configuration. *See id.* ¶ 15. However, we do not speculate about how Furukawa deals with the overhead processing of re-enumeration. It suffices in this case that we are not persuaded that Furukawa expressly discloses that re-enumeration and reconfiguration processing is eliminated, and that Petitioner does not persuasively argue that such a disclosure is inherent in Furukawa.

Independent apparatus claims 3, 7, and 23 and independent method claim 18 include similar recitations to those of claim 1 and Petitioner presents similar arguments for these claims. Pet. 45–53.

Accordingly, we are not persuaded by a preponderance of the evidence that Furukawa anticipates any of independent claims 1, 3, 7, 18, and 23.

3. Dependent Claims 2, 4–6, 8, 10, 11, 15–17, 19, 20, 22, 24, and 25

Dependent claims 2, 4–6, 8, 10, 11, 15–17, 19, 20, 22, 24, and 25 depend, directly or indirectly, from one of independent claims 1, 3, 7, 18, and 23 and, thus, incorporate the limitations of their respective base claim. Because we are not persuaded Furukawa discloses, expressly or inherently, concurrent connections by multiple hosts to one peripheral device, as recited in each independent base claim from which these dependent claims depend, we also are not persuaded by a preponderance of the evidence that Furukawa discloses every limitation of these claims.

4. Conclusion Regarding Anticipation by Furukawa

For the above reasons, we are not persuaded Petitioner has established by a preponderance of the evidence that any of claims 1–8, 10, 11, 15–20, and 22–25 are unpatentable as anticipated by Furukawa.

E. Anticipation by Dickens

The Petition asserts claims 1–8, 11, 15–20, and 22–25 are anticipated by Dickens. Pet. 54–62. For the reasons discussed below, we are persuaded that Dickens anticipates claims 1, 3–5, 7, 8, 11, 15, and 18–20. We are not persuaded claims 2, 6, 16, 17, and 22–25 are anticipated by Dickens.

1. Dickens (Ex. 1003)

According to Dickens, prior techniques for sharing a USB peripheral device include use of an Ethernet local area network or switching devices that utilize complex wiring. Ex. 1003, 1:31–39. Dickens discloses a data routing device to share a USB peripheral device among a plurality of USB hosts. *Id.* at 1:45–49. Figure 1, a version of which is reproduced below,[21] is a schematic illustration of a system using the inventive data routing device. *Id.* at 5:8–9.

[21] Figures in the Dickens US Patent (Ex. 1003) are hand-drawn and, although understandable, are difficult to view. The same patent application was filed in Great Britain (GB 2 350 212 A – Exhibit 3001) and Figures 1 and 2 therein are substantively identical but easier to view. Thus, we reproduce here the Dickens' Figures 1 and 2 from the substantively identical patent application filed in Great Britain.

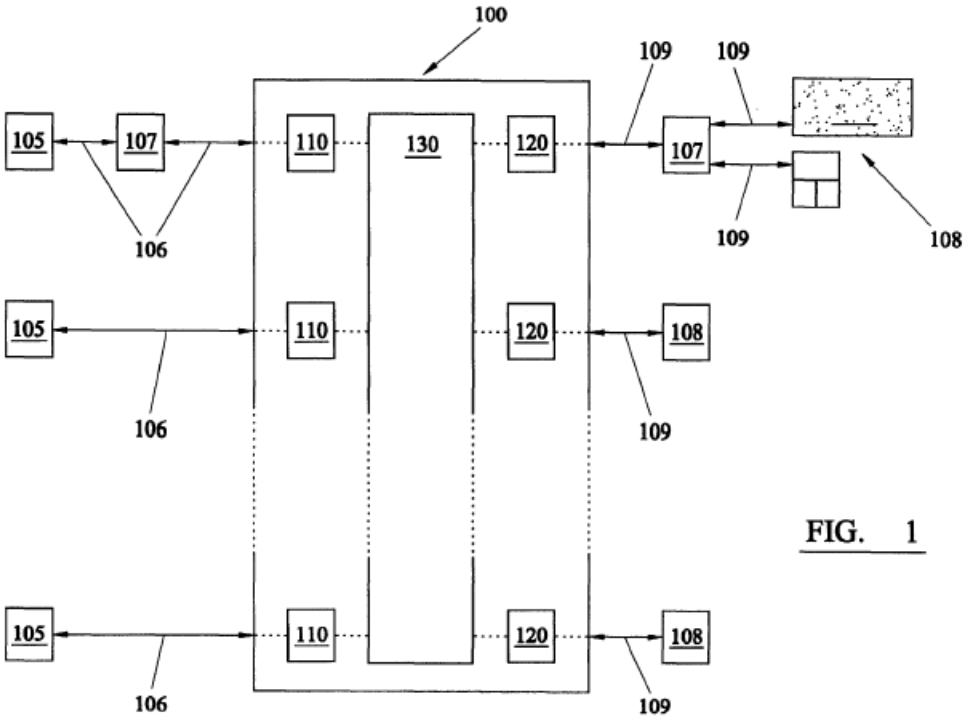

FIG. 1

Figure 1 depicts a system 100 including data routing device 130 coupled with multiple USB host computers 105 through respective USB busses 106 and data converters 110. *Id.* at 5:26–37. Data routing device 130 also is coupled with a plurality of USB peripheral devices 108 through respective USB busses 109 and data converters 120. *Id.* at 5:66–6:11. Data converters 110 and 120 use USB protocols in exchanges with hosts 105 and devices 108, respectively. *Id.* at 5:33–37, 6:9–11. Data converters 110 include emulation functions to emulate the presence of each USB peripheral device 108 in system 100 so that each USB host 105 will detect the peripheral devices as present and configure themselves accordingly. *Id.* at 5:38–43. Data converters 120 include emulation functions to emulate the presence of a USB host on each USB bus 109 associated with each USB peripheral device 108 causing the peripheral devices to communicate with data router

130 through a corresponding converter 120 as though it is connected to a USB host. *Id.* at 6:12–17.

Figure 2 of Dickens, reproduced below[22], is a schematic illustration of elements within the data routing system of Figure 1. *Id.* at 5:9–11

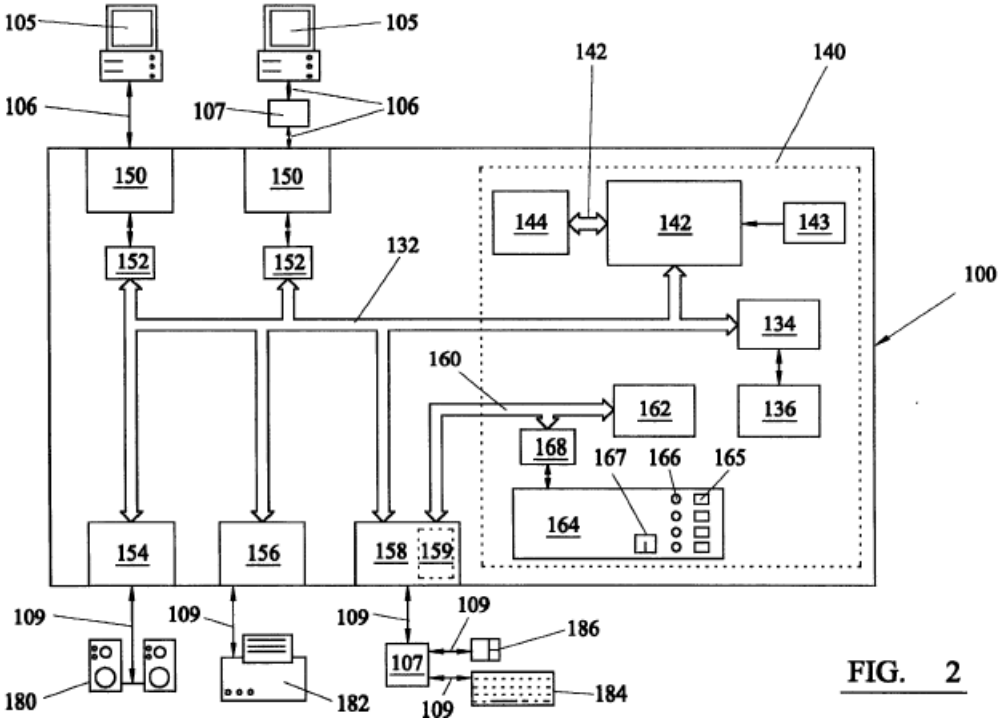

Figure 2 depicts data router 130 (the largest rectangle also labelled as system 100) comprising microprocessor-based controller 140 and PCI bus 132 for coupling to other components within data router 130. *See id.* at 6:29–50. Data router 130 is coupled to two USB host devices 105 through respective data converters each comprising USB device controller 150 and PCI bus interface 152. *Id.* at 6:51–54. Data router 130 is also coupled with USB peripheral devices 180, 182, 184, and 186 via USB busses 109 and corresponding USB host controllers 154, 156, and 158 coupled with PCI bus

[22] This Figure, like the version of Figure 1 reproduced above, is from GB 2 350 212 A.

132. *Id.* at 6:57–7:8. In particular, USB host controller 156 serves to couple router 130 to printer 182.

In operation, data router 130 of Dickens receives a request for exchange from any host 105 via corresponding data converter 150 and emulates operation of each of the peripheral devices (180, 182, 184, and 186) coupled with router 130. *See id.* at 7:36–45. Information to or from a peripheral device is moved between data router 130 and the peripheral device via the emulated USB host provided by a corresponding USB host controller 154, 156, or 158. *See id.* at 8:16–41. In other words, data router 130 emulates each attached USB peripheral device for each attached USB host and emulates a requesting USB host for each attached peripheral device.

2. Independent Claims 1, 3, and 7

Petitioner identifies the recited USB multi-host device as reading on data router 130 of Dickens and the recited first and second upstream ports as reading on data converters 110 (or equivalently 150 of Fig. 2). Pet. 54–55.[23] Petitioner further identifies the function block ("USB device corresponding . . .") as reading on any one of Dickens' USB peripheral devices including, for example, printer 182 and identifies the recited controller as reading on Dickens' routing controller 140 within data router 130—the routing controller being coupled with two upstream ports

[23] Petitioner quotes a disclosure of Dickens and erroneously cites column 2, lines 12–13 thereof for that quote. The quoted text appears at column 5, lines 29–31 of Dickens. We find the incorrect citation to be harmless error.

(converters 110/150 coupled with USB busses 106) and coupled with the function block (e.g., printer 182). *Id.* at 55.

The "wherein" clause of claim 1 requires that the controller be configured to "establish concurrent respective dedicated USB connections between the [function block] and the first and second upstream ports" to enable certain recited host functions be performed by the device. Petitioner argues Dickens meets this limitation in that controller 140 maintains USB connections with host computers 105 through respective device controllers 150 (upstream ports) and maintains USB connections with printer 182 (a function block) through USB controller 156. Pet. 57.

One of the recited host functions provided by the controller's concurrent dedicated USB connections is allowing hosts to "simultaneously request access to the USB device." Petitioner contends the recited simultaneous access by multiple USB hosts reads on Dickens' disclosure of simultaneous access by multiple USB hosts to emulated devices provided by each host's corresponding data converter 110 of data router 130, including simultaneous enumerating and configuring the emulated devices. Pet. 56–57 (citing Ex. 1003, 5:26–43; Ex. 1023 ¶ 107). Petitioner further argues Dickens provides simultaneous access by two hosts when the hosts simultaneously attempt to send data to a shared function block (e.g., printer 182) such that data to be printed may be received simultaneously by router 130 from any two USB hosts. *Id.* at 57–58.

The other recited host function provided by the controller's concurrent dedicated USB connections is allowing hosts to alternately access the function without reconfiguring the function on each switch between hosts. Petitioner contends data from the second USB host will be buffered while

the data from the first host is being transmitted from data router 130 to printer 182 (the recited alternating access). *Id.* at 57–59 (citing Ex. 1003, 9:21–27). In particular, Petitioner contends Dickens discloses that the hosts remain connected to their respective emulated devices (provided by corresponding data converters 110) and, thus, would not require reconfiguration as ordinarily skilled artisans with knowledge of the USB specification would have known. *Id.* at 58–59 (citing Ex. 1003, 3:23–24, 9:20–30; Ex. 1023 ¶ 111).

Notwithstanding Patent Owner's arguments, which we have considered and which we address below, we are persuaded by Petitioner's showing, which we adopt as our own findings and conclusions, that independent claims 1, 3, and 7 are anticipated by Dickens.

a. Dickens Discloses the Claimed "Device"

Patent Owner argues Dickens does not anticipate claim 1 because "Petitioner improperly attempts to combine portions of separate USB devices to conclude the claims of the '243 Patent are anticipated" and, thus, the elements of Dickens are not arranged as in the claim. PO Resp. 23. Specifically, Patent Owner agues the Petition improperly combines two separate pieces of hardware in Dickens to read on the claimed multi-host device—namely data routing device 100 and printer 182. *Id.* (citing *Net MoneyIN*, 545 F.3d at 1370. By contrast, based on its proffered construction of "device" (Paper 28, 1–3), Patent Owner contends claim 1 is directed to ***a*** device—i.e., an integral device—that comprises the recited structures within the device and provides the recited functionality. *Id.* at 24.

Petitioner argues that Patent Owner's arguments are based on an incorrect interpretation of "device," as claimed, as limited to an integral, unitary device comprising the recited elements. Reply 17–18.

We agree with Petitioner. Patent Owner's argument is not persuasive because it is based upon an overly narrow construction of "device," which we decline to adopt for the reasons discussed above.

Therefore, we are persuaded by Petitioner's arguments that the claimed "device" is disclosed by Dickens as the combination of routing device 100 (including controller 140 read as the recited multi-host controller) and printer 182 (read as the recited function block).

b. "Concurrent Dedicated USB Connections"

With slight variations in phrasing, all claims refer to concurrent dedicated USB connections. Patent Owner argues Dickens does not teach "USB connections." PO Resp. 29–35. Patent Owner further argues Dickens fails to teach "concurrent" USB connections (*id.* at 35–39) and fails to teach "dedicated" USB connections (*id.* at 39–43).

i. "USB Connection"

We first address Arguments directed to "USB connections" in general.

Patent Owner argues Dickens does not disclose the claimed "USB connections" because, although Dickens' routing device 100 establishes a USB connection between it and the host computers and between it and the peripheral devices, all exchanges are converted to PCI bus exchanges within the routing device. PO Resp. 29–31. We agree that Dickens converts all USB exchanges between an attached USB host and an attached USB

peripheral from USB protocols to a PCI bus (or other non-USB processor bus) and its associated non-USB protocols. Patent Owner's argument is not persuasive, however, because it is based upon an overly narrow construction of "USB connection," which we decline to adopt for the reasons discussed above.

As further evidence that Dickens fails to disclose the recited "USB connection," Patent Owner argues that "installing a specific driver on any host 105 for a specific device will not allow the user to plug that specific device into a downstream port of Dicken's [sic] data routing device 100 without also upgrading the software running on data routing device 100." PO Resp. 31 (citing Ex. 2007 ¶¶ 88, 107). We are not persuaded because the selection of a device driver is unrelated to the establishment of a "USB connection" as we construe the term. The claims are not limited to USB connections that support particular devices or even particular types of devices and their associated drivers.

Patent Owner contends "the Board's conclusion that Dickens' PCI bus can make up a USB connection misunderstands the Dickens system" because "Dickens' data router includes multiple distinct USB buses." PPO Resp. 32. Patent Owner then redraws Dickens' Figure 2 with annotations identifying five different USB busses—one each connected to each of two hosts (105) and three more connected to each of three exemplary peripheral devices (180, 182, and 184). PO Resp. 32–35. We are not persuaded by Patent Owner's argument. Our construction of "USB connection" does not encompass a PCI bus alone as within the scope of "USB connection." Instead, we interpret "USB connection" as including intervening segments or portions that may be non-USB—such as Dickens' intervening PCI bus

132 or the digital interconnections described within the ’243 patent’s multi-host device 106. *See* section II.A.4.e. Furthermore, Petitioner argues, and we agree, that, similar to Dickens’ device 100, multi-host device 106 of the ’243 patent uses three USB busses—one each connected to two hosts and one connecting controller 108 to function block 312 (the third UBS bus may also be implemented as a digital interconnect). The structures of Dickens’ device 100 and multi-host device 106 are essentially identical with respect the use of multiple USB serial busses.

Therefore, we are persuaded by Petitioner’s arguments that the claimed “USB connections” are disclosed by Dickens in that, controller 140 maintains USB connections with host computers 105 through respective device controllers 150 (upstream ports) and maintains a USB connection with printer 182 (a function block) through USB controller 156. Pet. 56. Thus, all exchanges to and from an attached host 105 are over a USB bus 106 using USB protocols and all exchanges to and from an attached peripheral (printer 182) are over a USB bus 109 using USB protocols. Any intervening non-USB exchanges, such as over a PCI bus, are transparent to host 105 and printer 182 and, therefore, are within the scope of a “USB connection” as we have construed the term (“direct and indirect connection, both with and without intervening interconnect, using USB protocols.”).

ii. “Concurrent USB Connections”

All claims also require the USB connections be “concurrent.” In accordance with our construction of “concurrent,” the two USB connections must be “operating or occurring at the same time.”

After considering the issue anew based on the parties' evidence submitted at trial, a preponderance of the evidence leads us to the same conclusion. Patent Owner argues "[t]he fact that there is only a single connection to Dickens' printer (the claimed 'USB function block') precludes a finding of anticipation." PO Resp. 33. Patent Owner further argues,

> Indeed, one of ordinary skill in the art would understand that the single USB connection to Dickens' printer 182 only allows print data from one host at a time. Knapen ¶ 95; *see also* [Ex. 1003], 2:48–52 ("Data activity from each of the computers can be monitored and routed through to the printer on a first come first served basis. Switchover between the data sources can occur when a break in data transmission greater than a defined timeout period has been detected.").

Id. at 34.

We are not persuaded by Patent Owner's argument. Patent Owner's argument conflates the USB connections with the ability to transfer data concurrently or simultaneously. Petitioner argues, and we agree, "Figure 3 of the '243 Patent is no different: one arrow between the '243 Patent controller and device/function is the only way data is transferred, and data must necessarily communicate over this depicted-as-single arrow from each of the illustrated hosts." Reply 12. There is only a single physical connection between Dickens' routing device 100 and any one peripheral device (e.g., printer 182) in exactly the same manner as in the '243 patent in which there is a single physical connection between multi-host controller 108 and device/function 312 in Figure 3. Through that single physical connection in the '243 patent, data may be exchanged alternately (as clearly expressed in the claim and as discussed further below). *See* Ex. 1001, 2:61–65 ("The internal arbitration mechanism may enable each host to access the

shared Peripheral Function by either interleaving host accesses, or by using a common request/grant structure, which may hold-off one host while another host completes a data transfer to/from the shared device.”). A switch of data transfer between two hosts is performed in Dickens in essentially the same manner (though potentially based on different switching criteria). *See* Ex. 1003, 2:48–52 (“Data activity from each of the computers can be monitored and routed through to the printer on a first come first served basis. Switchover between the data sources can occur when a break in data transmission greater than a defined timeout period has been detected.”).

While the data transfers may switch between hosts in Dickens and in the ’243 patent, the USB connections from any two USB hosts 105 in Dickens to printer 182 are established and remain established regardless of whether data is presently being transferred. Each host 105 in Dickens remains connected to Dickens’ routing controller 140 within data router 130 through its respective interface 150 and data converter 110. Like multi-host controller 106 in the ’243 patent, Dickens controller 140 switches (arbitrates or alternates) data transmissions to/from different hosts in accordance with a desired algorithm. *See, e.g.,* Ex. 1003, 9:1–34 (audio alarms states from two computers are monitored and a printer is shared between established host connection based on a timeout period).

Patent Owner also argues Dickens’ does not teach two concurrent USB connections because there is only a single connection between printer 182 (the claimed function block) and hosts 105. PO Resp. 35–39. Patent Owner reproduces an annotated version of Figure 2 of the ’243 patent which is reproduced below.

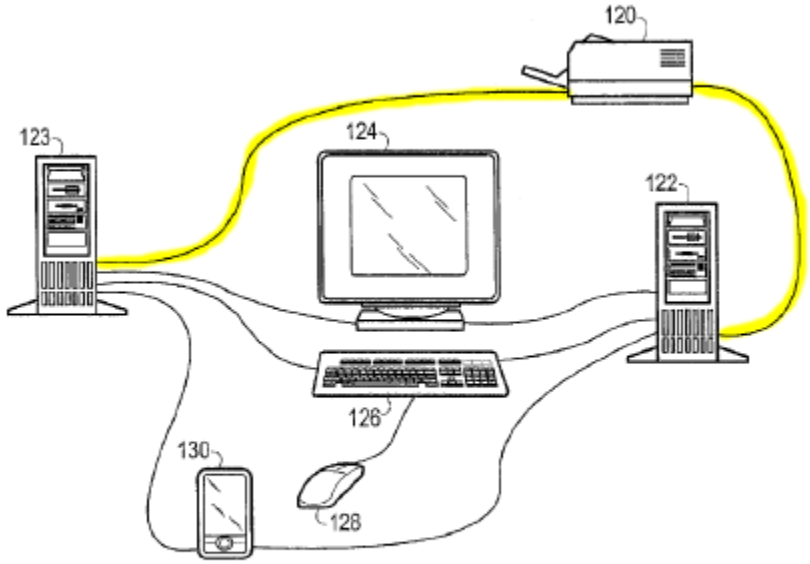

FIG. 2

Figure 2 of the ’243 patent, annotated by Patent Owner and reproduced above, shows two concurrent USB connections highlighted in yellow—one between PC 122 and printer 120 and a second between PC 123 and printer 120. PO Resp. 37.

We are not persuaded by Patent Owner’s argument. The ’243 patent discloses that printer 120 of Figure 2 is one example of multi-host device 106, including its controller 108. *See* Ex. 1001, 2:51–59. Figure 3 of the ’243 patent further details the structure of multi-host device 108. As discussed *supra*, device 106 in Figure 3 shows a single connection from its controller 106 to function block 312 essentially the same as Dickens’ single USB bus 109 coupling device 100 to printer 182. In other words, the concurrent USB connections of the ’243 patent terminate at a single connection to the function block 312 just as the concurrent USB connections in Dickens terminate at a single connection to a peripheral device (e.g., printer 182).

Thus, USB connections in Dickens between both of two hosts 105 (or upstream ports) and the printer 182 are established and remain so as data exchanges may alternate among the two hosts and, hence, are "concurrent USB connections" because they "operate or occur at the same time once established."

iii. "Concurrent Dedicated USB Connections"

As discussed *supra*, we construe a "dedicated" USB connection to be "a USB connection that may include some shared physical communication path and includes a buffer for maintaining dedicated address, configuration and response information for the connection." Patent Owner argues the Petition fails to show "dedicated" USB connections in Dickens because printer 182 (identified in the Petition as an exemplary function block) "has only one connection to the data router, i.e., 'USB connection 109.'" PO Resp. 40 (citing Ex. 1003, 6:66–67). By contrast, Patent Owner argues the "dedicated" connections of the '243 patent require two separate, distinct, physical connections from each of two hosts to the single function block. and again provides the same annotated version of its Figure 2, reproduced and discussed *supra*, to explain the difference. *Id.* at 41–43. Therefore, Patent Owner contends there are no "dedicated" connections in Dickens because the single path 109 is a shared portion of the connection used for both hosts to communicate with printer 182 and, thus, there is no dedicated USB connection between each host and the function block (e.g., printer 182). *Id.* at 42–43.

We are persuaded by Petitioner's arguments. Petitioner contends, and we agree, Patent Owner's arguments are based on an incorrect understanding of "dedicated" connection. Reply. 17–18.

To clarify Petitioner's position, Petitioner provides two side-by-side annotated figures (Pet. Sur-Sur-Reply 10) that we reproduce below.[24]

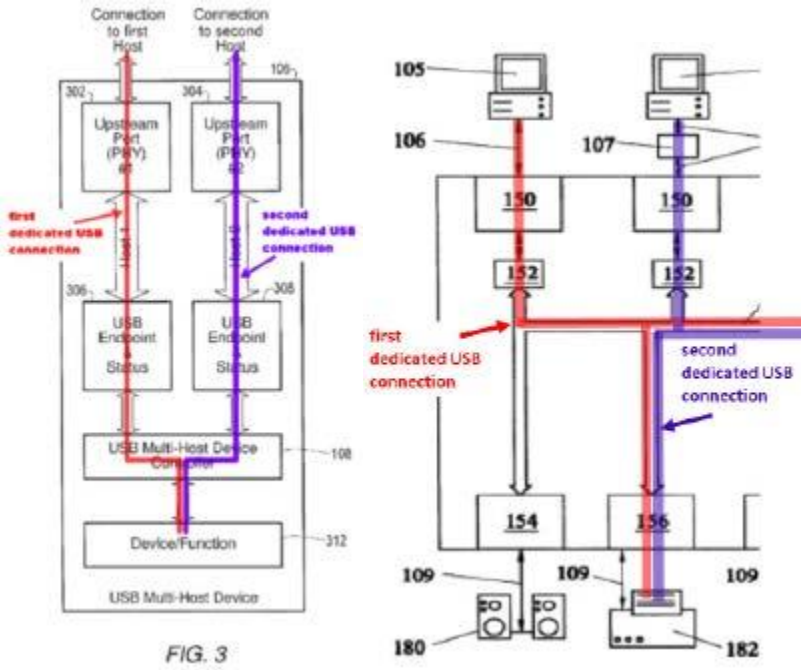

The figure on the left is Figure 3 of the '243 patent with red and purple annotations added by Patent Owner showing two alleged "dedicated USB connections"—a first highlighted in red from the first host to device/function block 312 and a second highlighted in purple from the second host to block 312. PO Sur-Reply 9. On the right above, Petitioner

[24] Petitioner provided the annotated side-by-side figures in rebutting Patent Owner's arguments regarding "concurrency" of the USB connections. See Sur-Sur-reply 9–10. However, we find the figures instructive in helping to explain Petitioner's arguments regarding all aspects of "concurrent dedicated USB connections."

provides a similarly highlighted portion of Figure 2 from Dickens showing a first dedicated USB connection, highlighted in red, from a first host to printer 182 and a second dedicated USB connection, highlighted in purple, from a second host to printer 182.[25] Pet. Sur-Sur-Reply 9–10.

The annotations highlight that both the ’243 patent and Dickens provide two “dedicated” USB connections from corresponding two hosts to a function block both ending in a single shared communication path to the function block. Thus, the USB connections of Dickens meet the first portion of our interpretation “a USB connection that may include some shared physical communication path.”

Additionally, as discussed further below, Dickens’ controller 140 include DRAM memory 144 used as a buffer for the connections in accordance with the second portion of our construction of a “dedicated” connection “includes a buffer for maintaining dedicated address, configuration and response information for the connection.”

Accordingly, we are persuaded that Dickens teaches that its concurrent USB connections are “dedicated” concurrent USB connections within the scope of our interpretation of “dedicated” connections.

[25] We note the red and purple highlighted path move off the figure to the right to, and back from, Dickens’ controller 140 in its Figure 2 but Petitioner has excerpted only the portion relevant to demonstrating dedicated connections similar to those of the ’243 patent.

c. Conclusion Regarding Independent Claims 1, 3, and 7

For the reasons discussed above, we are persuaded by a preponderance of the evidence that independent claims 1, 3, and 7 are anticipated by Dickens.

3. Claim 23

Claim 23 recites, "a shared USB device block operable to be simultaneously configured by two or more USB hosts." Patent Owner argues the Petition fails to identify where this element is taught in Dickens and, instead, merely treats claim 1 as representative of all the independent claims. PO Resp. 43 (citing Pet. 59). However, Patent Owner argues claim 23's recitation of "a shared USB device block operable to be simultaneously configured by two or more USB hosts" is a substantive difference over claim 1. *Id.* Each host 105 in Dickens is coupled with a corresponding converter 110 to emulate all peripheral device coupled to routing device 100. *See* Ex. 1003, 5:26–53. Patent Owner argues our reliance on the emulated printers as being configured simultaneously is misplaced. *Id.* at 44 (citing Dec. 31–32). Patent Owner contends the emulated devices are separate from the physical peripheral devices (e.g., printer 182 in Dickens) that are relied upon as the recited "shared device block" of claim 23. *Id.* Patent Owner further contends the emulated printers provided to each host 105 of Dickens by corresponding converters 110 are "enumerated, thus configured, independently from printer 182." *Id.* (citing Ex. 2007 ¶ 110).

Petitioner argues in its Reply that hosts 105 enumerate/configure emulated printers and "host controller" 156 enumerates/configures printer 182. Reply 18–19. Specifically, Petitioner contends, "[H]aving configured

the emulated printer, insofar as the host can sense, it has configured the printer, emulated and actual/physical. Put another way permitted by 23's language, hosts have, by emulation, configured the printer." *Id.* at 19.

We are persuaded by Patent Owner's arguments. Even if Petitioner's arguments in its Reply are persuasive, Patent Owner correctly observes that the Petition did not present any arguments specific to the substantive differences between claim 23 and claim 1—namely that the function block need be operable to be "simultaneously configured by two or more hosts." PO Resp. 43.

Furthermore, we are not persuaded by Petitioner's arguments in its Reply. In essence, Petitioner appears to be arguing that hosts 105, configuring their respective emulated printers (through emulation by translators 110), are unaware whether they are configuring emulated printers or the actual/physical printer 182. Accepting that as true, it is not the case that two such host are actually configuring the physical printer 182 (read as the shared function block) simultaneously. They may configure the emulated printers simultaneously but we have insufficient persuasive evidence that that is the same as configuring the shared function block (physical printer 182) simultaneously.

Accordingly, we are not persuaded by a preponderance of the evidence that independent claim 23 is unpatentable as anticipated by Dickens.

4. Claim 18

Patent Owner argues the "shared USB device" is construed in our Decision on Institution as "a USB device that may be simultaneously

configured and accessed by two or more USB hosts" and that further must have "three blocks, the third of which is a function block." PO Resp. 45–46; *see also* Dec. 11. Patent Owner further argues the only function block the Petition identified in Dickens is printer 182. *Id.* Patent Owner then contends, "The mere fact there is a single USB connection to printer 182 means it is impossible for two hosts to simultaneously configure and access printer 182. Knapen ¶ 108. As discussed above, enumeration of the emulated printers are separate activities from the enumeration of printer 182." *Id.* Therefore, Patent Owner argues claim 18 is not anticipated "because Dickens does not have 'a USB device that may be simultaneously configured and accessed by two or more USB hosts,' as required by the Board's construction of 'shared USB device.'"

We are not persuaded by Patent Owner's argument. Initially, we observe that claim 18 does not require that the function block be simultaneously configured or enumerated, or even simultaneously accessed. Instead, it recites the step of receiving requests to the shared USB device (the "device" not the "function block" per se) and the step of processing those requests without any of the hosts needing to reconfigure the USB device each time (again referring to eh "device" rather than the function block). Other than the recitation that the shared USB device corresponds to a function, there is no reference to accessing the function. As discussed *supra*, we construe "shared USB device" in claim 18 to refer to the device rather than the function. *See* section II.A.4.c.

We are persuaded by a preponderance of the evidence that independent method claim 18 is unpatentable as anticipated by Dickens.

5. Dependent Claims 2, 4–6, 8, 11, 15–17, 19, 20, 22, 24, and 25

Dependent claims 2, 4–6, 8, 11, 15–17, 19, 20, 22, 24, and 25 depend, directly or indirectly, from one of independent claims 1, 3, 7, 18, and 23 and, thus, incorporate the limitations of their respective base claims. Petitioner identifies the further limitations of each of dependent claims 2, 4–6, 8, 11, 15–17, 19, 20, 22, 24, and 25 in the disclosures of Dickens. Pet. 60–63.

a. Claims 2, 6, 16, and 25

Claims 2, 6, and 16, depend, directly or indirectly, from claims 1, 3, and 7, respectively, and each recites endpoint buffers positioned between respective upstream ports (or hosts) and the controller (e.g., endpoint & status 306 and 308 between upstream ports 302 and 304, respectively, and controller 108 in Figure 3 of the ’243 patent). Claim 25, dependent from claim 23, recites such buffers but does not recite their being positioned in any particular relationship to the hosts and controller.

The Petition contends, in Dickens, “DRAM memory 144 is coupled between the upstream ports and Dickens’ device’s data routing controller 140” thereby meeting the claim limitation. Pet. 59.

As drawn in Dickens’ Figure 2, DRAM memory 144 is not positioned physically between controller 140 and upstream ports (e.g., USB controllers 150). Patent Owner argues precisely this physical difference contending DRAM memory 144 is not between controller 140 and the upstream ports, instead, “DRAM 144 is actually inside the multi-host device controller (i.e., routing controller 140).” PO Resp. 46–47.

Petitioner argues “coupled between” should be construed to include “directly or indirectly connected” as coupled is defined in the ’243 patent.

Reply 13 (quoting Ex. 1001, 3:36–38). Petitioner supports this assertion citing *NTP, Inc. v. Research in Motion, Ltd.*, 418 F.3d 1282, 1310–11 (Fed. Cir. 2005) (A "'connection' can occur between . . . two devices regardless of whether they are housed separately or together. Indeed, the two components could be connected . . . and still be located in the same housing or even on the same circuit board."). Reply 13. Petitioner concludes that "coupled between" should be understood to mean "directly or indirectly connected with or without physical separation from what is connected." *Id.*

Patent Owner argues that, although "coupled" is defined in the '243 patent as directly or indirectly connected, "between" should have its plain and ordinary meaning and, thus, "one of ordinary skill would understand the endpoint buffer 'coupled between' the upstream port and the multi-host device controller is directly or indirectly connected in the middle of those two structures." PO Sur-Reply 11.

We are not persuaded by Petitioner's argument and we agree with Patent Owner that, based on the plain and ordinary meaning of "coupled between," Dickens DRAM memory 144 is not "coupled between" controller 140 and upstream ports. "Between" provides a specific structural limitation in these claims that cannot be ignored. Thus, we are not persuaded that claims 2, 6, and 16 are anticipated by Dickens.

Although claim 25 does not require the buffers be "coupled between" any other elements, for the reasons discussed *supra* regarding claim 23 from which claim 25 depends, we are not persuaded claim 25 is anticipated by Dickens.

c. Claims 4, 17, 22, and 24

Claims 4, 17, 22, and 24 depend, directly or indirectly, from claims 1, 7, 18, and 23, respectively. Claim 4 generally recites that the function is not re-enumerated each time a switch is made between hosts. Claims 17, 22, and 24 further recite that the controller maintains address, configuration, and response ("ACR") information for each connected host.

The Petition asserts claims 4, 17, 22, and 24 "repeat in various phrasings the non-re-configuring and non-reenumerating of claim 1." Although claim 4 may relate to this feature, claims 17, 22, and 24 include no such recitations. The Petition argues, "Dickens thereby discloses that the multi-host device controller allows the hosts to alternately access the USB function block without reconfiguring and/or re-enumerating the USB multi-host device each time the hosts alternate accessing the USB function block that is the Dickens printer" Pet. 61 (citing Ex. 1023 ¶ 118).

Patent Owner argues:

> Petitioner fails to explain or identify any disclosure in Dickens where routing controller 140 "maintain[s] respective dedicated address, configuration, and response information for each of the plurality of hosts." Rather, Petitioner merely rehashes the "non-re-configuration and non-reenumerating" argument of Claim 1 without specifically identifying in Dickens where the additional limitations of these dependent claims are allegedly found. Petition at 60–61. The only Dickens passage Petitioner cites is column 9, lines 20–35. *See id*. Neither this passage—nor anything else in Dickens—expressly discloses the multi-host device controller (i.e., routing controller 140) maintaining address, configuration, and response information for each of the hosts. And to the extent, Dickens might maintain address, configuration, and response information, it might do so outside of the "multi-host device controller." Dickens does not, therefore, anticipate Claims 17, 22, and 24.

PO Resp. 48.

Petitioner argues "maintaining" the recited ACR information equates with "establishing a dedicated connection 'without needing [the device] to be re-configured or re-enumerated . . . .'" Reply 15 (quoting Ex. 1001, 2:33–37).

We are not persuaded by Petitioner's argument. Regarding claims 17, 22, and 24, we agree with Patent Owner that the Petition fails to identify where Dickens teaches that the controller maintains the recited ACR information. Petitioner's argument in its Reply attempts to construe the recited element so as to coincide with the Petition's arguments directed to re-enumeration and reconfiguration. We discern no need for construction of the recited element beyond its plain meaning—namely that the control maintains the recited ACR information. Although the recitation may be inherent or suggested in Dickens, the Petition simply fails to identify an express teaching of this feature in Dickens. Thus, we are not persuaded by a preponderance of the evidence that claims 17, 22, and 24 are anticipated by Dickens.

Regarding claim 4, we are persuaded by a preponderance of the evidence that the claim is unpatentable as anticipated by Dickens.

d. Claims 5, 8, 11, 15, 19, and 20

The Petition identifies the features of these dependent claims in Dickens (Pet. 61–62) and Patent Owner does not rebut these assertions (*see* PO Resp.). We are persuaded by a preponderance of the evidence that claims 5, 8, 11, 15, 19, and 20 are anticipated by Dickens.

F. Obviousness over Either Furukawa or Dickens, and Chen

The Petition asserts dependent claims 9, 11–14, and 21 are unpatentable as obvious over either Furukawa or Dickens, in combination with Chen. Pet. 63–69. Claims 9 and 11–14 depend (directly or indirectly) from claim 7, and claim 21 depends from claim 18. Claims 9, 11, 12, and 21 recite limitations relating to interleaving processing of requests received from USB hosts. Claims 13 and 14 recite limitations relating to distribution of bandwidth in processing of requests from multiple USB hosts. Petitioner relies on Chen, in combination with either Furukawa or Dickens, for disclosing the interleaving and bandwidth related limitations. *Id.*

In view of our findings *supra* regarding Furukawa, we do not further consider the alternative of Furukawa in combination with Chen because the Petition does not rely on Chen for any deficiency of Furukawa discussed *supra*.

1. Chen (Ex. 1005)

According to Chen, USB flash memory devices that operate as disk drives to a personal computer ("PC") are each assigned a drive letter by the PC operating system software. Ex. 1005, 1:47–57. Chen further discloses that several such flash memory USB drives may be added to a PC using USB hubs to expand the number of USB devices accessible to the PC. *Id.* at 1:19–20. However, according to Chen, the number of such flash memory drives could exceed the number of possible drive letters in the PC operating system. *Id.* at 1:58–67. Chen purports to resolve this problem by providing an enhanced USB hub capable of operating as a standard USB hub or, in a "single-endpoint mode" of operation, as an enhanced hub that aggregates

downstream USB flash memory disk drives into one logical USB endpoint as detected by the PC operating system and hence as a single device or drive letter. *Id.* at 2:53–64.

Chen's Figure 2, reproduced below, is a block diagram of a USB switch that aggregates multiple flash memory endpoints coupled thereto into a single endpoint for the USB host (PC). *Id.* at 2:13–14.

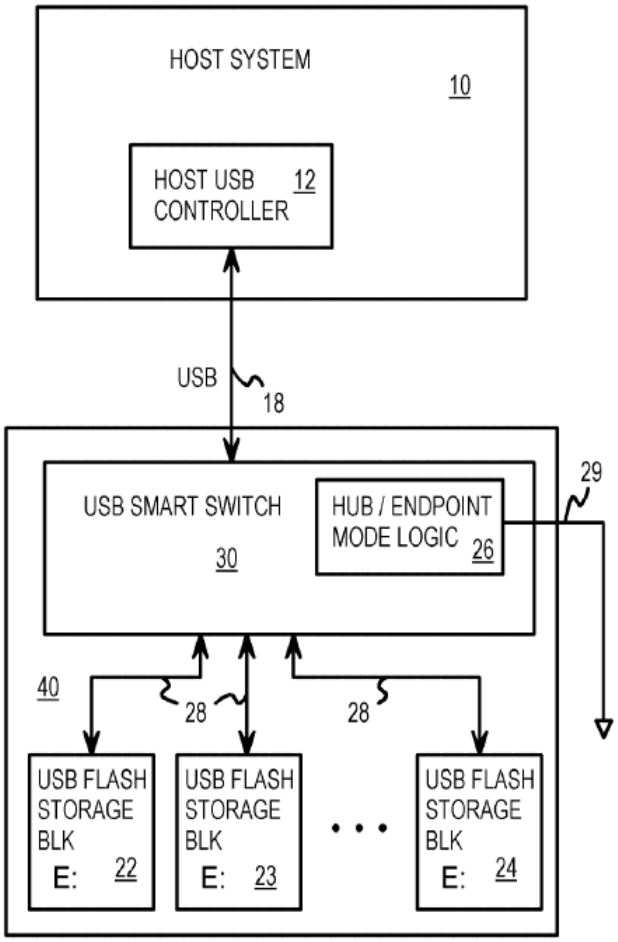

FIG. 2

Figure 2 depicts USB switch 30 coupled with USB host 10 through USB controller 12 to receive and process requests over USB bus 18. *Id.* at 2:53–

57. Mode logic 26 controls switch 30 to selectively operate in the single-endpoint mode. *Id.* at 2:59–61.

> When operating in single-endpoint mode, USB switch **30** acts as the final USB endpoint for transactions on USB bus **18** to host **10**. USB switch **30** generates USB transactions on hidden USB buses **28** to USB flash storage blocks **22, 23, 24**. USB flash storage blocks **22, 23, 24** respond to USB switch **30** over hidden USB buses **28** with USB switch **30** acting as the USB host on hidden USB buses **28**. USB switch **30** then forwards data to host **10** by acting as the endpoint. Thus[,] USB flash storage blocks **22, 23, 24** are hidden from host **10** when mode logic **26** activates the single-endpoint mode.

Id. at 3:5–14.

Chen further discloses that, when operating in the single-endpoint mode to aggregate multiple flash memory drives into a single endpoint, transaction packets may be re-ordered. *Id.* at 3:63–66. For example, "Rather than have all packets for a first transaction complete before the next transaction begins, packets for the next transaction can be re-ordered by USB switch **30** and sent to the memory devices before completion of the first transaction." *Id.* at 4:2–6. Chen's Figure 5 shows exemplary re-ordering of transaction packets and Chen discloses that "[d]ata throughput can be improved using such packet re-ordering." *Id.* at 5:49–50.

2. Motivation to Combine Dickens and Chen

Petitioner identifies motivation for the proposed combination by referring to "rationales (D) and (G) of MPEP 2143." Pet. 63 (citing Ex. 1023 ¶¶ 123–141). As discussed in our Decision on Institution, to the extent that arguments are found only in the Declaration of Mr. Garney, we

determine those arguments are improperly incorporated by reference (37 C.F.R. § 42.6(a)(3)), and we decline to consider them.

However, Petitioner also argues that the ordinarily skilled artisan would have been motivated to combine Chen's interleaving with Dickens' system because Chen's known techniques of interleaving USB host transactions would improve throughput in the similar system of Dickens in a similar manner and because Chen specifically teaches its interleaving technique improves data throughput. Pet. 66–67. Specifically, Petitioner contends it would have been obvious to improve throughput for any or all of multiple USB hosts sending transactions to USB peripheral devices in Dickens by adding Chen's interleaving features to Dickens' data router. *Id.* Petitioner further contends the ordinarily skilled artisan would have recognized that "interleaving transactions from two or more hosts is not different than interleaving transactions from one host." *Id.* at 67.

Patent Owner argues the ordinarily skilled artisan would not have been motivated to combine Dickens and Chen because "1) Dickens expressly teaches away from a combination with Chen, 2) combining Chen with Dickens would render Dickens inoperable, and 3) Petitioner's proposed combination does not improve Dickens, does not apply Chen's 'improvement' technique in the same way as it is used in Chen, and does not result in predictable results." PO Resp. 49–50. We address each argument in turn.

a. Dickens Does Not Teach Away From Chen's Interleaving

Patent Owner argues Dickens teaches sharing a printer among multiple hosts relying on a timeout period to determine when to switch

between host requests and, thus, teaches away from Chen's interleaving of print data from multiple hosts. PO Resp. 51–52.

Petitioner argues Dickens teaches connecting a plurality of hosts to any number of peripheral devices. Reply 24. Although a printer as an exemplary peripheral device is discussed with respect to other aspects of the Petition, Petitioner argues the combination with Chen was proposed based on a mass storage device, such as in Chen and as identified in the '243 patent, as the shared peripheral. *Id.* (citing Ex. 1001, 2:23–24, 4:7).

Petitioner correctly argues that a teaching away must clearly discredit or discourage the proposed combination. Reply 23; *see In re Gurley*, 27 F.3d 551, 553 (Fed. Cir. 1994); *see also In re Fulton*, 391 F.3d 1195, 1201 (Fed. Cir. 2004) ("The prior art's mere disclosure of more than one alternative does not constitute a teaching away from any of these alternatives because such disclosure does not criticize, discredit, or otherwise discourage the solution claimed . . . ."). Dickens does not clearly discredit Chen's interleaving approach. The timeout features to switch between host print jobs is disclosed in Dickens only for sharing of a printer peripheral device. Other peripheral devices, such as speakers 180, need not use timeouts. Mr. Garney, Petitioner's expert, testifies that Chen's interleaving may be beneficially used to interleave multiple hosts sending transactions to other types of peripheral devices such as Dickens' speakers 180. Ex. 2006, 135:7–22. Mr. Garney further testifies that Chen's interleaving may be beneficially applied to interleave print jobs for certain types of printer generating a small volume of printed output such as a label printer. *Id.* at 136:16–25.

Thus, we are persuaded that Dickens' exemplary use of a printer as a shared peripheral device does not discredit or discourage use of Chen's interleaving and, thus, does not teach away from the proposed combination.

b. Combination Does Not Render Dickens Inoperable

Patent Owner argues combining Chen with Dickens renders Dickens inoperable because Chen teaches interleaving transactions (that comprise multiple packets) by interleaving the multiple packets of multiple transactions, each destined to different downstream device—i.e., a different downstream memory device. PO Resp. 53. Patent Owner argues this is only because, in Chen, each downstream memory device would receive packets destined to the device in the proper sequence. *Id.* By contrast, Patent Owner argues, where the destination is a single device, the interleaving of packets from different host transactions (such as multiple hosts sharing a single peripheral device as in Dickens) would risk packets arriving out of sequence, thus, violating USB protocols and rendering the combination inoperable. *Id.* at 53–54.

Petitioner argues Patent Owner's arguments are based on a hypothetical out of order sequence of interleaved packets but Chen does not disclose such a sequence. *See* Reply 25–26.

We are persuaded by Petitioner's arguments. Chen's Figure 5 depicts an exemplary sequence of re-ordering received packets for two transaction from one host. The description of Figure 5 explains a carefully designed sequence of operations to enable interleaving of packets of a transaction in a manner that precludes out of order packets. *See* Ex. 1005, 4:62–5:54. This specific sequence need not be applied by rote in the proposed combination

with Dickens and, thus, Patent Owner's hypothetical inoperability arises from rote bodily incorporation of the references. "It is well-established that a determination of obviousness based on teachings from multiple references does not require an actual, physical substitution of elements. . . . Rather, the test for obviousness is what the combined teachings of the references would have suggested to those having ordinary skill in the art." *In re Mouttet*, 686 F.3d 1322, 1332–33 (Fed. Cir. 2012); *see also MCM Portfolio LLC v. Hewlett-Packard Co.*, 812 F.3d 1284, 1294 (Fed. Cir. 2015) ("[t]he test for obviousness is not whether the features of a secondary reference may be bodily incorporated into the structure of the primary reference" (citation omitted)), *cert. denied*, 137 S. Ct. 292 (2016). We are persuaded by Petitioner's arguments that the ordinarily skilled artisan, with knowledge of the USB specification and experience in the design of USB devices, would have understood how to apply the suggestions of Chen to interleave transactions in the context of Dickens' multiple hosts accessing a shared peripheral device.

c. Combining Chen With Dickens Improves Dickens

Patent Owner argues the proposed combination does not improve Dickens because the combination renders Dicken inoperable. PO Resp. 55. For the reasons discussed *supra*, we disagree. The proposed combination does not render Dickens inoperable.

Patent Owner further argues the Petition fails to explain how Chen's interleaving improves Dickens because "Chen's system is fundamentally different." *Id.* Patent Owner argues, "Chen is a switch between a single host and multiple downstream devices whereas Dickens' is a switch between

multiple hosts and a single device." *Id.* Patent Owner contends, "[t]o the extent one of ordinary skill could find some way to make the combination operable, it would have to be in some way other than as described in Chen." *Id.* at 56.

Petitioner argues the alleged fundamental difference is incorrect because Chen discloses a single device made up of blocks. Reply 27.

We are persuaded by Petitioner's arguments. Figure 5 of Chen describes the interleaving of packets for multiple transactions when operating in its disclosed "single-endpoint" mode of operation in which the host sees the multiple memory devices as a single USB device. *See* Ex. 1005, 2:59–3:4. As above, an ordinarily skilled artisan, with knowledge of the USB specification and experience designing USB devices, would have understood that Chen's two interleaved transactions could be two transactions from two separate hosts as in Dickens. Thus, we are persuaded that the proposed combination would have been operable and that the improvements of Chen's interleaving would have been suggested to the ordinarily skilled artisan to improve throughput of multiple transactions from multiple hosts directed to a shared, single-endpoint, peripheral device.

d. Conclusion Regarding Motivation to Combine Dickens and Chen

For the reasons discussed below, we are persuaded Petitioner has provided a sufficient reason/motivation for the combination of Chen's interleaving with Dickens' device to improve throughput based on rational underpinnings.

3. Claims 9, 11–14, and 21 Obvious Over Dickens and Chen

Patent Owner does not respond to Petitioner's substantive arguments regarding obviousness of claims 9, 11–14, and 21. We are persuaded by a preponderance of the evidence that claims 9, 11–14, and 21 would have been obvious over the combination of Dickens and Chen.

G. Obviousness over Either Furukawa or Dickens and USB 2.0

In this asserted ground, Petitioner argues, in its entirety:

> Just as either Furukawa or Dickens in view of Chen invalidates claims 9, 11–14, and 21, as in ground 3, either Furukawa or Dickens in view of USB 2.0 invalidates claims 9, 11–14, and 21. USB 2.0 also has interleaving, as does Chen. Garney-¶¶ 20, 142-148. See also Garney '190 E1019-1:52-2:7.

Pet. 70.

Contrary to our rules, Petitioner's assertions in this ground improperly incorporate by reference discussion from Mr. Garney's Declaration. 37 C.F.R. § 42.6(a)(3). We do not consider such improperly incorporated arguments from another document. The arguments presented within the Petition are inadequate to identify where each element is taught or suggested in the prior art. *See* 37 C.F.R. § 42.104(b)(4) ("[t]he petition must specify where each element of the claim is found in the prior art patents or printed publications relied upon").

Thus, Petitioner has not shown, by a preponderance of the evidence, that claims 9, 11–14, and 21 are unpatentable as obvious over either Furukawa or Dickens in combination with USB 2.0

H. Obviousness over Wurzburg, Osakada, and Either Furukawa or Dickens

For this ground, the Petition asserts, "Bohm claims 1-25 are invalid for obviousness over *Wurzburg in view of Osakada, as in prosecution*, in view of either Furukawa or Dickens." Pet. 70 (emphasis added). We observe Wurzburg and Osakada were not asserted as a combination during prosecution of this patent application or in prosecution of the parent patent application. In the last Office Action before allowance of the parent patent application, Wurzburg was applied as an anticipatory reference to claims 1, 3–5, 7–9, 11, 12, 15, and 17–24 and applied in a single reference obviousness rejection for dependent claims 2, 6, 16, and 25.[26] *See* Ex. 1014, 12, 25–30. In an earlier Office Action in the parent patent application's prosecution, Osakada was applied in both an anticipation rejection and a single reference obviousness rejection. *Id.* at 51–56. Even if such prior Office Actions were properly incorporated by reference, Petitioner has not identified, nor do we discern, anywhere in the record where Wurzburg and Osakada have been previously applied in combination for an obviousness rejection. Thus, the Petition fails to "specify where each element of the claim is found in the prior art patents or printed publications relied upon" as required by our rules. 37 C.F.R. § 42.104(b)(4).

Petitioner further argues the combination of Wurzburg and Osakada "lacked only concurrent connections as opposed to non-concurrent connections, simultaneous access instead of non-simultaneous access, and non-reconfiguring during access, as opposed to configuring during access."

---

[26] As noted *supra*, the claims of the parent patent application are nearly identical to those of the '243 patent.

Pet. 70. Petitioner then asserts Furukawa teaches these missing features. *Id.* As discussed *supra*, we are not persuaded that Furukawa expressly or inherently teaches these features.[27] *Id.*

For at least the above reasons, Petitioner has not shown, by a preponderance of the evidence that claims 1–25 are unpatentable as obvious over Wurzburg in view of Osakada, and either Furukawa or Dickens.

I. Obviousness over Either Furukawa or Dickens, Chen, and Other Art

Petitioner's argument for this ground, in its entirety, reads:

> To any extent Bohm's owner asserts lack of anticipation of claims by Furukawa or Dickens, the claims are invalid for obviousness under 35 U.S.C. §103 from either Furukawa or Dickens, Chen, Wurzburg, Osakada, APA, Adder, USB 2.0 and all other cited art. Both Furukawa and Dickens disclose a multi-host USB device with a USB multi-host device and controller, their structures, and associated connections and functionalities, that provide connections to USB devices by multiple hosts without re-enumeration and reconfiguration of the devices by the hosts. To any extent the Bohm patent owner disagrees in any detail as to any of the independent and dependent claims, the disagreement will surely be as to known ("known") USB system structures and functionalities ("technology"), and then Furukawa, Dickens, Chen, Wuraburg [sic], Osakada, APA, Adder, USB 2.0, Lou, Fujita, and all the other cited art overcome the disagreement and teach and/or make obvious the owner-referenced technology. USB 2.0 is especially thorough in explaining known USB system technology in all details of the Bohm claims. It even states that it provides "architecture

[27] Petitioner is silent in this ground with respect to specific teaching in Dickens to be added to the proposed combination of Wurzburg and Osakada. Petitioner does not even attempt to incorporate by reference, however improper, earlier arguments regarding teachings of Dickens to be added to the proposed combination.

> upgradeable to support multiple USB Host Controllers in a system," thereby suggesting multiple hosts. U-14-upgrade-path. Strong motivation to combine as necessary to provide what Bohm sought to provide, i.e., access of USB hosts in plural to USB device(s) without disconnection switching that caused device reconfiguration, B-1:65-2:5, was provided by Furukawa and Dickens, and also USB 2.0, Lou, and Fujita. Wurzburg and Adder disclosed devices just short of the Bohm claims by requiring switching, which was replaced in Furukawa and Dickens. Moving forward the next step as in all of Bohm, Furukawa and Dickens was strongly motivated by Furukawa, Dickens, Fujita, and Lou. No dependent claims of Bohm add patentable merit to any independent claim.

Pet. 71–72.

To the extent this ground is asserting obviousness over any combination with Furukawa, as discussed *supra*, we are not persuaded Furukawa expressly or inherently teaches the features of the '243 patent for which Petitioner relied on it earlier in the Petition.

To the extent this ground is asserting the combination of Dickens and Chen, that combination is addressed above.

To the extent this ground is asserting any combinations other than those addressed above, the analysis in this ground is inadequate to meet the requirements of our rules regarding the level of detail required. 37 C.F.R. § 104(b)(4).

Thus, Petitioner has not shown, by a preponderance of the evidence that claims 1–25 are unpatentable as obvious over the above-proposed combinations.

J. Conclusion

For the reasons discussed *supra*, we are persuaded by a preponderance of the evidence, that claims 1, 3–5, 7–9, 11–15, and 18–21 of the '243 patent are unpatentable. Petitioner has not shown, by a preponderance of the evidence, that claims 2, 6, 10, 16, 17, and 22–25 are unpatentable.

III. MOTION TO EXCLUDE

Patent Owner timely objected (Paper 46) to Petitioner's Exhibit 1053 (Mr. Garney's Reply Declaration) and filed a Motion to Exclude (Paper 50, "Mot." or "Motion") moving to exclude Exhibit 1053 and Petitioner's Sur-Reply. Patent Owner argues the Sur-Reply and Exhibit 1053 raise new arguments directed to inherency in the alleged anticipation of certain challenged claims by Furukawa. *See* Mot.

We are not persuaded by Patent Owner's argument. As is discussed *supra*, we expressly found, and Petitioner confirmed, that it is not arguing inherency in its anticipation arguments but, instead, relies solely on what Petitioner argues are express disclosures of Furukawa.

Patent Owner further argues Petitioner's Sur-Reply should be excluded because, by incorporating portions of Exhibit 1053, the Sur-Reply attempts to circumvent the five-page limit as ordered when authorizing the Sur-Reply filing.

We remain unpersuaded by Patent Owner's argument. The Sur-Reply cites to various portions of Mr. Garney's Reply Declaration (Ex. 1053) to support its arguments but does not attempt to incorporate the entirety of that declaration into its Sur-Reply.

For the above reasons, we are not persuaded that Petitioner's Sur-Reply or Exhibit 1053 should be excluded, and for the foregoing reasons, Patent Owner's Motion to Exclude is *denied*.

III. ORDER

After due consideration of the record before us, and for the foregoing reasons, it is:

ORDERED that claims 1, 3–5, 7–9, 11–15, and 18–21 of U.S. Patent No. 7,523,243 B2 are held *unpatentable*;

FURTHER ORDERED that claims 2, 6, 10, 16, 17, and 22–25 of U.S. Patent No. 7,523,243 B2 have *not* been shown to be unpatentable;

FURTHER ORDERED that Patent Owner's Motion to Exclude Petitioner's Sur-Reply (Paper 42) and Exhibit 1053 is *denied*; and

FURTHER ORDERED that because this is a final written decision, parties to the proceeding seeking judicial review of the decision must comply with the notice and service requirements of 37 C.F.R. § 90.2.

PETITIONER:

Scott A. McKeown
James L. Davis, Jr.
ROPES & GRAY LLP
scott.mckeown@ropesgray.com
james.l.davis@ropesgray.com

PATENT OWNER:

Bruce W. Slayden II
Brian C. Banner
R. William Beard, Jr.
Truman H. Fenton
Jerry F. Suva
SLAYDEN GRUBERT BEARD PLLC
bslayden@sgbfirm.com
bbanner@sgbfirm.com
wbeard@sgbfirm.com
tfenton@sgbfirm.com
jsuva@sgbfirm.com