Filed: April 24, 2019

Filed on behalf of:
Patent Owner Intellectual Ventures II LLC
By: John R. King
Ted M. Cannon
Bridget A. Smith
KNOBBE, MARTENS, OLSON & BEAR, LLP
2040 Main Street, 14th Floor
Irvine, CA 92614
Telephone: (949) 760-0404
Facsimile: (949) 760-9502
Email: BoxPGL49-2@knobbe.com

UNITED STATES PATENT AND TRADEMARK OFFICE

BEFORE THE PATENT TRIAL AND APPEAL BOARD

AISIN SEIKI CO., LTD., TOYOTA MOTOR CORP.,
AND AMERICAN HONDA MOTOR CO.

Petitioners,

v.

INTELLECTUAL VENTURES II LLC,

Patent Owner.

Case No. IPR2017-01539[1]
U.S. Patent No. 7,683,509

PATENT OWNER'S NOTICE OF APPEAL TO THE U.S. COURT OF APPEALS FOR THE FEDERAL CIRCUIT

---

[1] IPR2018-00444 has been joined with the current proceeding.

Pursuant to 28 U.S.C. § 1295(a)(4)(A); 35 U.S.C. §§ 141(c), 142, and 319; 37 C.F.R. §§ 90.2(a) and 90.3; and Rule 4(a) of the Federal Rules of Appellate Procedure, notice is hereby given that Patent Owner Intellectual Ventures II LLC ("Patent Owner") hereby appeals to the United States Court of Appeals for the Federal Circuit from the Final Written Decision of the Patent Trial and Appeal Board ("Board") entered on December 12, 2018 (Paper 43) and from all underlying orders, decisions, rulings, and opinions that are adverse to Patent Owner related thereto or included therein, including those within the Decision on Institution of *Inter Partes* Review entered on December 13, 2017 (Paper 10). A copy of the Final Written Decision (Paper 43) is attached hereto as Attachment A.

For the limited purpose of providing the information requested in 37 C.F.R. § 90.2 (a)(3)(ii), Patent Owner identifies that the issues on appeal include, but are not limited to: (1) the Board's judgment that claims 1, 2, 7, 14, and 15 of U.S. Patent No. 7,683,509 are unpatentable; (2) the Board's claim constructions; and (3) all other decisions or findings of the Board that are adverse to Patent Owner.

Simultaneous with this submission, Patent Owner is electronically filing a copy of this Notice of Appeal and its Attachment A with the Patent Trial and Appeal Board. In addition, Patent Owner is electronically filing a copy of this Notice of Appeal, including attachments, with the Clerk's Office for the United States Court of Appeals for the Federal Circuit, together with the required fees.

Respectfully submitted,

KNOBBE, MARTENS, OLSON & BEAR, LLP

Dated: April 24, 2019

By: /Ted M. Cannon/

John R. King (Reg. No. 34,362)
Ted M. Cannon (Reg. No. 55,036)
Bridget A. Smith (Reg. No. 63,574)
Customer No. 20,995
Attorneys for Patent Owner
Intellectual Ventures II LLC
(949) 760-0404

ATTACHMENT A

Trials@uspto.gov
571.272.7822

Paper No. 43
December 12, 2018

UNITED STATES PATENT AND TRADEMARK OFFICE

BEFORE THE PATENT TRIAL AND APPEAL BOARD

AISIN SEIKI CO., LTD., TOYOTA MOTOR CORP. and
AMERICAN HONDA MOTOR CO., INC.,
Petitioner,

v.

INTELLECTUAL VENTURES II LLC,
Patent Owner.

Case IPR2017-01539[1]
Patent 7,683,509 B2

Before KRISTEN L. DROESCH, JOHN A. HUDALLA, and
AMANDA F. WIEKER, *Administrative Patent Judges*.

DROESCH, *Administrative Patent Judge*.

FINAL WRITTEN DECISION
35 U.S.C. § 318(a) and 37 C.F.R. § 42.73

DECISION DENYING PATENT OWNER'S MOTION TO STRIKE
37 C.F.R. § 42.71

[1] Case IPR2018-00444 has been joined with this proceeding.

I. INTRODUCTION

A. Background

Aisin Seiki Co., Ltd. and Toyota Motor Corp. filed a Petition requesting an *inter partes* review of claims 1–3, 7, 14, and 15 ("challenged claims") of U.S. Patent No. 7,683,509 B2 (Ex. 1001, "the '509 Patent"). Paper 1 ("Pet"). Intellectual Ventures II LLC ("Patent Owner") timely filed a Preliminary Response. Paper 7 ("Prelim. Resp."). We instituted an *inter partes* review of challenged claims 1, 2, 7, 14, and 15 on some of the grounds of unpatentability raised in the Petition, pursuant to 35 U.S.C. § 314. Paper 10 ("Inst. Dec.").

After institution of review, Patent Owner filed a Patent Owner Response (Paper 17, "PO Resp.").

On April 26, 2018, we joined IPR2018-00444 with this proceeding, on American Honda Motor Co., Inc.'s motion. Paper 19. Hereinafter, we refer collectively to all petitioning entities, i.e., Aisin Seiki Co., Ltd., Toyota Motor Corp., and American Honda Motor Co., Inc., as "Petitioner."

On May 3, 2018, pursuant to *SAS Institute, Inc. v. Iancu*, 138 S. Ct. 1348, 1358 (2018), we modified the Institution Decision to institute review of all challenged claims on all grounds presented in the Petition (Paper 20, "*SAS* Order"). Accordingly, this *inter partes* review involves challenges to claims 1–3, 7, 14, and 15 on all grounds presented in the Petition. *See* Inst. Dec. 5; *SAS* Order 2.

Following our *SAS* Order and pursuant to our authorization, Patent Owner filed a Supplemental Patent Owner Response to address the newly-instituted grounds and claim. Paper 28 ("Supp. PO Resp."). Petitioner filed a Reply (Paper 30, "Reply") to Patent Owner's Response and Supplemental

Patent Owner Response, to which Patent Owner filed a Sur-Reply (Paper 35, "Sur-Reply"). Patent Owner also filed a Motion to Strike Petitioner's Reply (Paper 36, "Mot. Str."), to which Petitioner filed an Opposition (Paper 38, "Opp. Mot. Str.").

Petitioner relies on a Declaration of David L. Trumper, Ph.D. (Ex. 1002, "Trumper Declaration") to support its Petition. Patent Owner relies on Declarations of Joseph J. Beaman, Jr., Sc.D. (Ex. 2007, "Beaman Declaration"; Ex. 2013, "Second Beaman Declaration") and Declarations of Dr. Charles A. Garris, Jr. (Ex. 2008, "Garris Declaration"; Ex. 2014, "Second Garris Declaration") to support its Patent Owner Response and Supplemental Patent Owner Response. All witnesses were cross-examined, and transcripts of their depositions are in the record. Ex. 1018 ("Beaman Deposition"); Ex. 1137 ("Second Beaman Deposition"); Ex. 1016 ("Garris Deposition"); Ex. 2006 ("Trumper Deposition"); Ex. 2015 ("Second Trumper Deposition").

Oral argument was held on September 18, 2018, and a transcript is included in the record. Paper 42 ("Tr.").

We issue this Final Written Decision pursuant to 35 U.S.C. § 318(a) and 37 C.F.R. § 42.73. For the reasons set forth below, Petitioner has shown by a preponderance of the evidence that claims 1, 2, 7, 14, and 15 are unpatentable, but has not shown by a preponderance of the evidence that claim 3 is unpatentable.

B. Related Proceedings

The parties represent that the '509 Patent is at issue in the following proceedings: *In the Matter of Certain Thermoplastic-Encapsulated Electric Motors, Components Thereof, and Products and Vehicles Containing Same,*

ITC Inv. No. 337-TA-1052; *In the Matter of Certain Thermoplastic-Encapsulated Electric Motors, Components Thereof, and Products and Vehicles Containing Same II*, ITC Inv. No. 337-TA-1073; *Intellectual Ventures II LLC v. Honda Motor Co., Ltd.*, Case No. 1:17-cv-00294 (D. Del.); *Intellectual Ventures II LLC v. Aisin Seiki Co., Ltd.*, Case No. 1:17-cv-00295 (D. Del.); *Intellectual Ventures II LLC v. Toyota Motor Corp.*, Case No. 1:17-cv-00300 (D. Del.); *Intellectual Ventures II LLC v. Toyota Motor Corp.*, Case No. 2:17-cv-07681 (C.D. Cal.); *Intellectual Ventures II LLC v. Aisin Seiki Co., Ltd.*, Case No. 2:17-cv-13551 (E.D. Mich.). Pet. 1; Paper 5, 2; Paper 8, 2; Paper 9, 2

According to Patent Owner, the ’509 Patent is also at issue in Case IPR2017-01494. Paper 5, 2.

C. The ’509 Patent (Ex. 1001)

The ’509 Patent discloses a fluid-cooled electromagnetic field-functioning device, such as a motor, generator, transformer, solenoid, or relay, comprising one or more electrical conductors, a monolithic body of phase change material substantially encapsulating the conductors, and at least one coolant channel substantially encapsulated within the body of phase change material. *See* Ex. 1001, Abstract.

The ’509 Patent discloses a motor/generator used as a power source for a hybrid electric vehicle. *See* Ex. 1001, 15:48–50.

Figure 14 of the ’509 Patent is reproduced below.

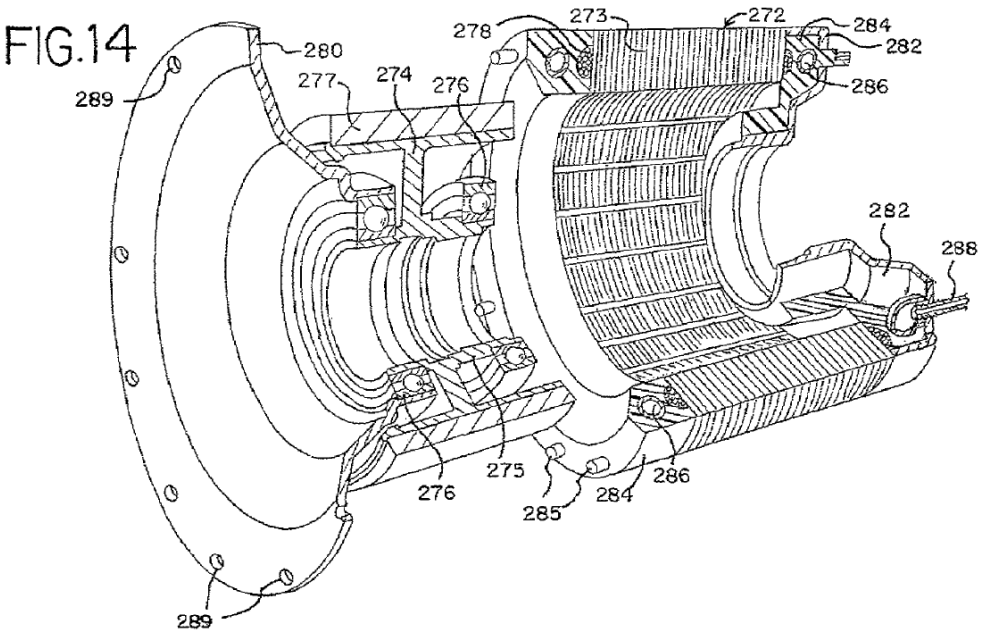

Figure 14 depicts an exploded partial cross section view of motor/generator 270. *See* Ex. 1001, 4:29–31, 4:34–35. Motor/generator 270 includes stator assembly 272 and rotor 274 rotatably mounted to stator assembly 272 with bearings 276. *See id.* at 15:51–54. Stator assembly 272 is made of steel laminated core 273 and windings 278. *See id.* at 15:51–59. Windings 278 and the laminations making core 273 are substantially encapsulated by body 284 of phase change material. *See id.* at 15:63–65. Two liquid-tight coolant channels 286 also are substantially encapsulated in body 284 of phase change material. *See id.* at 16:12–13. Channels 286 may be molded into body 284 when it is formed, preferably by putting a metal, plastic, or thermoplastic conduit in place before body 284 is solidified. *See id.* at 16:12–19. Fittings 288 are needed to introduce and remove liquid from coolant channels 286 and also are partially encapsulated in body 284 of phase change material. *See id.* at 16:19–22.

The ’509 Patent also discloses a solenoid valve which may, for example, be part of a fuel injector. *See* Ex. 1001, 18:33–34, 19:1–2.

Figures 20 and 21 of the ’509 Patent are reproduced below.

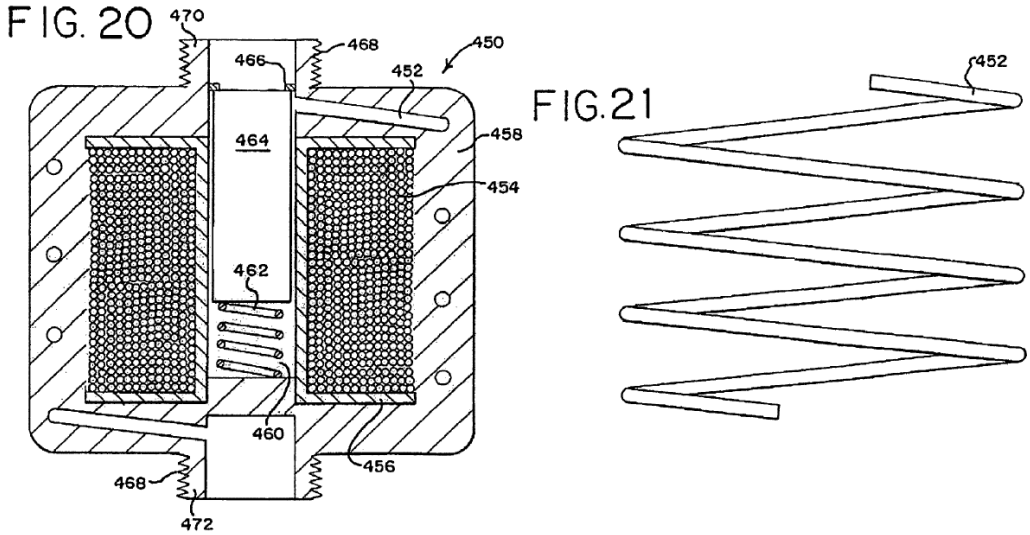

Figure 20 depicts solenoid valve 450, and Figure 21 depicts conduit 452 formed in a helical shape. *See* Ex. 1001, 19:1–2, 19:6–7. Solenoid valve 450 is cooled by a heat transfer fluid. *See id*. at 19:3–4. Solenoid valve 450 includes conductor 454 in the form of wire windings on bobbin 456. *See id*. at 19:7–9. Bobbin 456, wire 454, and conduit 452 are placed in a mold and a thermoplastic is molded around the pieces to encapsulate them and form body 458. *See id*. at 19:9–12. Central channel 460 is left for placement of spring 462 and plunger 464. *See id*. at 19:13–15. Pipe threads 468 may be molded onto body 458 to form inlet 470 and outlet 472 connections. *See id*. at 19:16–18. The ’509 Patent further discloses:

> the present invention contemplates using the various methods on other devices than those in which it is specifically shown in the drawings. For example, while small spindle motors would not typically be cooled by a liquid that flows into and out of the motor, there may be may be applications where this is practical. Then the cooling channels shown in the devices of FIGS. 12–16

> and 20–21 could be used in the body of phase change material encapsulating the stator.

Ex. 1001, 20:63–21:4.

The ’509 Patent also discloses:

> U.S. Pat. No. 6,659,737 [(Ex. 1013)] (hereby incorporated herein by reference) discloses a pump that can be modified according to the present invention so that the thermoplastic encapsulating the stator body is also used to form the housing for the device. In such an embodiment, the stator would be constructed without the shaft and held on a core pin in a mold. The inside surface of the mold would form the outside of the housing. The housing would have a larger inlet than depicted in the ’737 patent, one that would allow the motor shaft and impeller to be added to the stator after the molding operation. The flow path through the plastic could be formed by either injecting gas into the molten plastic in the mold so as to produce channels, or by molding around a plurality of conduits filled with ice or wax which could later be removed to leave an integrated flow path through the body. In either manner, a fluid inlet port and a fluid outlet port could be formed in the body of injection molded thermoplastic, and the pathway through the body would be confined within the body. Thus the pathway is a defined pathway through a housing that is formed, at least in part, out of the same monolithic body that encapsulates the conductor. Rather than having a two-part housing that is separately molded and attached to an encapsulated stator, one monolithic body would be formed that encapsulates the stator and forms the flow channels through the device.

Ex. 1001, 20:29–53; *see generally* Ex. 1013.

D. Illustrative Claims

Of the challenged claims, claims 1, 3, and 14 are independent, with claims 2 and 7 dependent from claim 1, and claim 15 dependent from claim 14. Claims 3 and 14 are illustrative and reproduced below:

> 3. A fluid-cooled electromagnetic field-functioning device comprising:
> a) at least one electrical conductor;
> b) a monolithic body of injection molded thermoplastic material substantially encapsulating the at least one conductor; and
> c) a non-linear heat transfer fluid pathway provided by a separate conduit formed from thermoplastic which is substantially encapsulated in the monolithic body, with at least one fluid inlet and at least one fluid outlet to said pathway to allow for passage of heat transfer fluid through the pathway.
>
> 14. A fluid-cooled motor comprising:
> a) at least one electrical conductor;
> b) a monolithic body of injection molded thermoplastic material substantially encapsulating the at least one conductor; and
> c) a non-linear heat transfer fluid pathway in the monolithic body, with at least one fluid inlet and at least one fluid outlet to said pathway to allow for passage of heat transfer fluid through the pathway, wherein the monolithic body of injection molded thermoplastic material substantially encapsulates a stator of the motor.

Ex. 1001, 23:32–43, 24:39–50.

E. Asserted Grounds of Unpatentability

We instituted an *inter partes* review challenging the patentability of the following claims of the '509 Patent on the following grounds and prior art (Pet. 19–51; Inst. Dec. 19; *SAS* Order 2):

Claims	Statutory Basis	References
1–3, 7, 14, and 15	§ 103	Umeda[2], Raible[3], and Neal[4]
1–3, 7, 14, and 15	§ 103	Umeda and Stephan[5]
1–3, 14 and 15	§ 103	Bramm[6] and Watterson[7]

II. ANALYSIS

A. Claim Construction

For petitions filed before November 13, 2018, we interpret the claims of an unexpired patent that will not expire before issuance of a final written decision using the broadest reasonable interpretation in light of the specification. *See* 37 C.F.R. § 42.100(b) (2016); *Cuozzo Speed Techs., LLC v. Lee*, 136 S. Ct. 2131, 2144–46 (2016). Under the broadest reasonable interpretation standard, claim terms are given their ordinary and customary meaning as would be understood by one of ordinary skill in the art in the

[2] Ex. 1004, 16–28, JP H11–16550, published June 22, 1999 ("Umeda"), filed with an English translation (Ex. 1004, 2–15) and certification of translation (Ex. 1004, 1).
[3] Ex. 1010, U.S. Patent No. 5,368,438, issued Nov. 29, 1994 ("Raible").
[4] Ex. 1014, U.S. Patent No. 6,362,554 B1, issued Mar. 26, 2002 ("Neal").
[5] Ex. 1011, 20–33, DE 10307696 A1, published October 2, 2003 ("Stephan"), filed with an English translation (Ex. 1011, 2–19) and certification of translation (Ex. 1011, 1).
[6] Ex. 1008, U.S. Patent No. 4,944,748, issued July 31, 1990 ("Bramm").
[7] Ex. 1009, U.S. Patent No. 6,227,797 B1, issued May 8, 2001 ("Watterson").

context of the entire disclosure. *See In re Translogic Tech., Inc.*, 504 F.3d 1249, 1257 (Fed. Cir. 2007). Any special definitions for claim terms must be set forth with reasonable clarity, deliberateness, and precision. *See In re Paulsen*, 30 F.3d 1475, 1480 (Fed. Cir. 1994).

1. "heat transfer fluid" (claims 1, 3, and 14)

Prior to our institution of review, Patent Owner proposed a claim construction for "heat transfer fluid." *See* Prelim. Resp. 6–8; Inst. Dec. 9 (addressing parties' opposing claim constructions). In our Institution Decision, we determined that the broadest reasonable interpretation of "heat transfer fluid" consistent with the '509 Patent Specification is "liquids or gases, or combinations thereof, that are capable of heat transfer." Inst. Dec. 9; *see* Ex. 1001, 5:5–7 ("The term 'heat transfer fluid' as used in the present application includes both liquids and gases, as well as combination thereof.").

Patent Owner does not contest our construction (*see* PO Resp. 7), and Petitioner does not address explicitly the claim construction for "heat transfer fluid" in its Reply (*see generally* Reply). Accordingly, we maintain our determination that the broadest reasonable interpretation of "heat transfer fluid" in light of the '509 Patent is "liquids or gases, or combinations thereof, that are capable of heat transfer."

2. "fluid-cooled" (claims 1, 3, and 14 preambles)

We did not provide an explicit claim construction for "fluid-cooled" in the Institution Decision. *See* Inst. Dec. 6–12. Patent Owner argues that "fluid-cooled" as recited in the preambles of claims 1, 3, and 14 is a claim limitation because it is necessary to give life, meaning and vitality to the claim. *See* PO Resp. 7. According to Patent Owner, the adjective "fluid-

cooled" provides antecedent basis for "device" and "motor" recited in the body of the claims. *See id*. at 7–8 (quoting Ex. 1001, claims 1, 14; citing Ex. 2007 ¶ 30). Patent Owner also asserts that the '509 Patent Specification "repeatedly and consistently indicates that ***cooling*** of the motor is an important part of the invention disclosed and claimed in the '509 Patent." *Id*. at 8 (quoting Ex. 1001, Abstract, 1:6–9, 1:43–58, 2:6–9, 2:15–19; citing Ex. 2007 ¶¶ 31–33). Patent Owner asserts

> the '509 Patent discloses a motor or device that uses fluid for the purpose of cooling a motor or device. . . . A person of ordinary skill in the art would understand that the '509 Patent does not disclose a motor or device that merely moves heat transfer fluid around, without using the heat transfer fluid for the purpose of cooling the device. . . . However, because the Board construed "heat transfer fluid" broadly to cover a fluid that merely has the capability of heat transfer, the claims of the '509 Patent would not require the use of the heat transfer fluid for the purpose of cooling the motor or device, unless the preamble term "fluid-cooled" is given meaning.

PO Resp. 10 (citing Ex. 2007 ¶ 34).

Patent Owner contends that based on the cited portions of the '509 Patent Specification, "the broadest reasonable interpretation of 'fluid-cooled motor' or 'fluid-cooled . . . device' is 'a motor [or device] that uses fluid for the purpose of cooling the motor [or device].'" PO Resp. 11 (citing Ex. 2007 ¶ 35). According to Patent Owner, a person of ordinary skill in the art would understand that it "does not cover ***every*** motor or device in which a fluid merely causes a minor and purely incidental effect of cooling the motor or device." *Id*. (citing Ex. 2007 ¶ 36); *see also* Tr. 35:1–7, 40:11–41:10 (arguing that the preamble requires more than *de minimis* cooling). Patent Owner contends that construing "fluid-cooled" to cover every motor

or device in which a fluid merely causes a minor or purely incidental cooling effect would be unreasonably broad and have the effect of writing "fluid-cooled" out of the claims entirely. *See id.* at 11–12 (citing Ex. 2007 ¶ 36).

In reply, Petitioner argues that the preamble recitation of "fluid cooled" is not limiting and merely sets forth an intended use. *See* Reply 19–20 (citing PO Resp. 14; quoting *Rowe v. Dror*, 112 F.3d 473, 478 (Fed. Cir. 1997); *Catalina Mktg. Int'l v. Coolsavings.com, Inc.*, 289 F.3d 801, 809 (Fed. Cir. 2002)). According to Petitioner, "the preamble here falls squarely within the holding of *Catalina*, *i.e.*, it merely extolls benefits or features of the claimed invention (fluid cooling), and there is no clear reliance on those benefits or features as patentably significant." *Id.* at 20–21.

In its sur-reply, Patent Owner contends that, consistent with Patent Owner's arguments, the Petition treats "fluid-cooled" as a claim limitation because it alleges that each primary reference teaches the "fluid-cooled" limitation. Sur-Reply 1 (quoting Pet. 20; citing Pet. 32, 42, 44, 50). According to Patent Owner, Petitioner's arguments that the preamble is not limiting are incorrect because they do not reference the claim language or the '509 Patent Specification, which, Patent Owner contends, is necessary to analyze the preamble term in the context of the entire claim in view of the specification. *See id*. at 2 (citing *Pitney Bowes, Inc. v. Hewlett–Packard Co*., 182 F.3d 1298, 1305 (Fed. Cir. 1999)). Patent Owner also contends that Petitioner does not dispute that "fluid cooled" is necessary to provide antecedent basis for limitations in the body of the claims and does not rebut Patent Owner's arguments regarding the disclosures of the '509 Patent Specification. *See id.* at 3 (citing Ex. 10001, 1:6–9; PO Resp. 8–10).

Patent Owner also disputes Petitioner's argument that the preamble "fluid-cooled" connotes an intended use "because 'fluid-cooled' is an adjective describing a tangible characteristic of what the claimed motor or device ***is***, not an indication of what the motor or device is intended to do." Sur-Reply 4 (citing Reply 20). Patent Owner clarifies that the purpose of the claimed motor or device is not to be cooled by fluid, but, instead to perform a mechanical task. *See id.* According to Patent Owner, "fluid-cooled" "merely limits the claimed motors and devices to the specific subset of '***fluid-cooled*** motors' and '***fluid-cooled*** devices.'" *Id.* Patent Owner contends that its "proposed construction does not define the 'purpose' of the invention, but, instead, uses 'purpose' to distinguish, in practical terms understandable to a person of ordinary skill in the art, the subset of motors and devices that are 'fluid-cooled' from the subset of motors and devices that are not." *Id.* at 4–5 (citing PO Resp. 11).

The scope of the body of independent claims 1, 3, and 14, cover the structural elements of the claimed "device" or "motor." Although we appreciate that the preamble recitation of "fluid-cooled" provides antecedent basis for "device" and "motor" recited in the body of the claims, and that the '509 Patent Specification discloses that cooling of the motor is an important part of the invention, we determine the preamble recitation of "fluid-cooled" does not further limit *the structure* of the "motor" or "device." "If the body of the claim 'describes a structurally complete invention such that deletion of the preamble phrase does not affect the structure or steps of the claimed invention,' . . . the preamble is generally not limiting unless there is 'clear reliance on the preamble during prosecution to distinguish the claimed invention from the prior art.'" *Intirtool, Ltd. v.*

Texar Corp., 369 F.3d 1289, 1295 (Fed. Cir. 2004) (quoting *Catalina*, 289 F.3d at 808–09). Patent Owner does not direct us to sufficiently persuasive evidence from the specification or prosecution history to demonstrate clear reliance on "fluid-cooled" as patentably significant. *See Intirtool*, 369 F.3d at 1296) (citing *Catalina*, 289 F.3d at 809).

Consequently, in light of the parties' arguments, we do not consider the preamble recitation of "fluid-cooled" to impart any additional structural limitations on the "device" or "motor." Patent Owner's argument that "fluid-cooled" requires more than minor and incidental cooling, or more than *de minimis* cooling, also does not impart any additional structural limitations on the "device" or "motor."

3. "monolithic body" (claims 1, 3, and 14)

Prior to institution of review, the parties proposed differing claim constructions for "monolithic body." *See* Pet. 17–19; Prelim. Resp. 4–6; Inst. Dec. 6–8. In our Institution Decision, we declined to construe "monolithic body" as excluding a body formed by multiple pieces joined together, and instead determined that the broadest reasonable interpretation of "monolithic body" consistent with the '509 Patent Specification is "a body formed as a single piece." Inst. Dec. 7–8; *see* Ex. 1001, 5:62–63 ("Monolithic is defined as being formed as a single piece.").

Patent Owner agrees with our construction (*see* PO Resp. 6), and Petitioner does not address the claim construction for "monolithic body" in its Reply (*see generally* Reply 7–14). Accordingly, we maintain our determination that the broadest reasonable interpretation of "monolithic body" in light of the '509 Patent is "a body formed as a single piece."

4. "pathway" / "non-linear heat transfer fluid pathway" (claims 1, 3, and 14)

Prior to institution of review, Patent Owner asserted that the broadest reasonable interpretation of "heat transfer fluid pathway" is "channel for liquid or gas coolant." Prelim. Resp. 8–9. Patent Owner contended that a person of ordinary skill in the art would understand that "pathway" is a structural element because the claims recite additional fluid inlet and fluid outlet structures of the pathway. *See id*. at 8. Patent Owner asserts that the '509 Patent Specification consistently discloses the pathway structure as a channel. *See id.* at 8–9 (quoting Ex. 1001, Abstract, 3:47–56, 8:34–35). Petitioner did not offer an initial explicit construction for "heat transfer fluid pathway." *See* Pet. 17–19. In our Institution Decision, "we adopt[ed] Patent Owner's construction of 'pathway' as 'channel,' because it is consistent with the '509 Patent Specification." Inst. Dec. 10. In accordance with our construction for "heat transfer fluid," we also "construe[d] the broadest reasonable construction of 'heat transfer fluid pathway' as 'channel for liquids or gases, or combinations thereof that are capable of heat transfer.'" *Id*.

Also prior to institution of review, Patent Owner asserted that the broadest reasonable interpretation of "non-linear . . . pathway" was a "channel that cannot be formed by a simple core pin in an injection mold tool." Prelim. Resp. 9. Petitioner did not offer an initial explicit construction for "non-linear . . . pathway." *See* Pet. 17–19. In our Institution Decision, "we construe[d] the broadest reasonable interpretation of 'non-linear . . . pathway' as a 'channel that cannot be formed by a simple core pin in an injection mold tool.'" Inst. Dec. 11; *see* Ex. 1001, 18:15–17

("By 'non-linear' it is meant that the chamber or flow path cannot be formed by a simple core pin in an injection mold tool.").

In its Response, Patent Owner agrees with this construction for "non-linear . . . pathway." *See* PO Resp. 14. Patent Owner also agrees with the Board's construction of "pathway," and characterizes "the Board's construction [in the Institution Decision] of 'pathway' to mean a structural 'channel.'" *Id.* at 12. Patent Owner presents additional arguments asserting that "pathway" should be construed to mean "a structural 'channel.'" *See id.* at 13–14 (quoting Ex. 1001, Abstract, 3:47–56, 8:34–35; citing Ex 2007 ¶¶ 39–43). Petitioner does not address the claim construction for "pathway" or "non-linear heat transfer pathway" in its Reply. *See generally* Reply.

Accordingly, we maintain our determination that the broadest reasonable interpretation of "pathway" in light of the '509 Patent is "channel."

5. "substantially encapsulating (claims 1, 3, and 14)

Prior to institution of review, neither party proposed a construction for "substantially encapsulating." In its Response, Patent Owner contends that "[t]he broadest reasonable interpretation of 'substantially encapsulating' includes the requirement of 'either entirely surrounding or surrounding almost all except for minor areas that might be exposed.'" PO Resp. 14–16 (reproducing Ex. 1001, Fig. 4 with annotations; quoting Ex. 1001, 5:64–67, 6:42–44; citing Ex. 1001, 5:63–64; Ex. 2008 ¶¶ 27–30). Patent Owner notes that this panel of the Board previously construed a similar phrase, "substantially encapsulated," which appears in the claims of a different patent (U.S. Patent No. 7,154,200 B2) also owned by Patent Owner and challenged by Petitioner in IPR2017-01537. Specifically, we construed

"substantially encapsulated" as including Patent Owner's proposal, and also as requiring that "the body of thermoplastic material and the stator are rigidly fixed together and behave as a single component with respect to harmonic oscillation motion." PO Resp. 14 n.1. However, Patent Owner contends that the "harmonic oscillation motion" portion of the Board's construction is "not relevant to the issues at dispute in this IPR." *Id.*

Petitioner does not dispute Patent Owner's position that the broadest reasonable construction of this phrase includes the requirement of "either entirely surrounding or surrounding almost all except for minor areas that might be exposed." *See generally* Reply. However, in applying the prior art to this limitation, Petitioner also discusses whether the prior art components are rigidly fixed together and behave as a single component with respect to harmonic oscillation vibration. Pet. 21, 32, 33, 37, 43, 45, 50, 51.

The '509 Patent defines "substantial encapsulation" as follows:

> Substantial encapsulation means that the body 14 either entirely surrounds the stator 20, or surrounds significant areas of the stator that may be exposed. However, substantial encapsulation means that the body 14 and stator 20 are rigidly fixed together, and behave as a single component with respect to harmonic oscillation vibration.

Ex. 1001, 5:64–6:3. Additionally, the '509 Patent describes that, in the embodiment shown in Figure 4, "heat pipe 62 is substantially encapsulated in the body 14, as the body 14 surrounds almost all of the heat pipe 62 except for the minor exposed face, and the body 14 and heat pipe 62 are rigidly fixed together, and behave as a single component with respect to harmonic oscillation vibration." *Id.* at 6:42–47.

Patent Owner's undisputed proposed construction is consistent with the lexicographic definition and the cited example provided in the

’509 Patent. Ex. 1001, 5:64–6:3, 6:42–47. The lexicographic definition, however, also clearly defines this phrase as including the concept of “rigidly fix[ing] together, and behav[ing] as a single component with respect to harmonic oscillation vibration.” *Id.* at 5:67–6:3. The cited example similarly reflects this concept. *Id.* at 6:42–47. Patent Owner argues that this portion of the definition is “not relevant” to the disputed issues in this proceeding. PO Resp. 14 n.1. However, that the parties do not dispute this aspect of the phrase’s meaning does not alter the proper construction of the phrase. Additionally, Patent Owner provides no persuasive reasoning or evidence to support this bare attorney argument.

Thus, we construe “substantially encapsulating” in accordance with its lexicographic definition and cited example as “either entirely surrounding or surrounding almost all except for minor areas that might be exposed, such that the elements are rigidly fixed together and behave as a single component with respect to harmonic oscillation vibration.”

6. “separate conduit” (claim 3)

Independent claim 3 recites “a non-linear heat transfer fluid pathway provided by a separate conduit formed from thermoplastic which is substantially encapsulated in the monolithic body.” Ex. 1001, 23:38–43. Prior to institution of review, Patent Owner asserted that the broadest reasonable interpretation is “conduit separate from the monolithic body.” *See* Prelim. Resp. 10. Patent Owner contended that the full context of the claim language makes clear the structure from which the conduit is separate. *See id*. Patent Owner asserts the narrower “separate conduit” limitation recited in claim 3 requires the pathway to be structurally separate from, but “substantially encapsulated in,” the monolithic body. *See id*. Petitioner did

not offer an explicit construction for "separate conduit." *See* Pet. 17–19. In our Institution Decision, "we construe[d] the broadest reasonable interpretation of "separate conduit" as "conduit separate from the monolithic body." Inst. Dec. 11–12.

Patent Owner agrees with the Board's construction, and presents additional arguments asserting that the Board's construction is correct. *See* Supp. PO Resp. (quoting Inst. Dec. 11–12; Ex. 1001, 16:12–19; citing Ex. 2013 ¶¶ 87–91, 93; Ex. 2016 (dictionary definition for "separate")). Petitioner posits that "[i]f the Board's construction of 'separate conduit' leaves open the possibility that the conduit is formed from the same material as the monolithic body as long as the conduit is mechanically or physically separate from the monolithic body along the flow path, then claim 3 is rendered unpatentable for all of the reasons set forth in the Petition." Reply 24–25 (citing Ex. 1002 ¶ 100; Ex. 2015, 15:19–18:10, 19:5–20:17); *see* Reply 1 (similar argument).

Petitioner's argument is not entirely clear. Nonetheless, we are not persuaded by Petitioner's argument because Petitioner's position overlooks the remaining limitations of claim 3—namely "a separate conduit formed from thermoplastic which is ***substantially encapsulated in the monolithic body***." It is unclear how the conduit can be mechanically or physically separate from the monolithic body, as argued by Petitioner, and also be "substantially encapsulated" in the monolithic body as required by the claim and our construction of "substantially encapsulated," i.e., the monolithic body either entirely surrounds the conduit or surrounds almost all of the conduit except for minor areas, such that the conduit and monolithic body

are rigidly fixed together to behave as a single component with respect to harmonic oscillation vibration. *See* Section II.A.5.

Accordingly, we discern no reason to modify our construction, and, therefore, we maintain our determination that the broadest reasonable interpretation of "separate conduit" in light of the '509 Patent is "conduit separate from the monolithic body." As a result, and consistent with our determination of the broadest reasonable interpretation of "substantially encapsulating," addressed in Section II.A.5., we determine that the broadest reasonable interpretation for the entire phrase—"a separate conduit formed from thermoplastic which is substantially encapsulated in the monolithic body"—is "a separate conduit formed from thermoplastic either entirely surrounded by the monolithic body or surrounded by the monolithic body except for minor areas that might be exposed, such that the conduit and monolithic body are rigidly fixed together and behave as a single component with respect to harmonic oscillation vibration."

B. Principles of Law

A claim is unpatentable under 35 U.S.C. § 103(a) if "the differences between the subject matter sought to be patented and the prior art are such that the subject matter as a whole would have been obvious at the time the invention was made to a person having ordinary skill in the art to which said subject matter pertains." *KSR Int'l Co. v. Teleflex Inc.*, 550 U.S. 398, 406 (2007). The question of obviousness is resolved on the basis of underlying factual determinations, including (1) the scope and content of the prior art; (2) any differences between the claimed subject matter and the prior art; (3) the level of skill in the art; and (4) objective evidence of non-

obviousness, when in evidence.[8] *Graham v. John Deere Co.*, 383 U.S. 1, 17–18 (1966). When evaluating a combination of teachings, we must also "determine whether there was an apparent reason to combine the known elements in the fashion claimed by the patent at issue." *KSR*, 550 U.S. at 418 (citing *In re Kahn*, 441 F.3d 977, 988 (Fed. Cir. 2006)). Whether a combination of elements produced a predictable result weighs in the ultimate determination of obviousness. *Id.* at 416–417.

"In an [*inter partes* review], the petitioner has the burden from the onset to show with particularity why the patent it challenges is unpatentable." *Harmonic Inc. v. Avid Tech., Inc.*, 815 F.3d 1356, 1363 (Fed. Cir. 2016). The burden of persuasion never shifts to Patent Owner. *Dynamic Drinkware, LLC v. Nat'l Graphics, Inc.*, 800 F.3d 1375, 1378 (Fed. Cir. 2015). To prevail, Petitioner must support its challenge by a preponderance of the evidence. 35 U.S.C. § 316(e); 37 C.F.R. § 42.1(d).

We analyze the challenges presented in the Petition in accordance with the above-stated principles.

C. Level of Ordinary Skill in the Art

In determining whether an invention would have been obvious at the time it was made, we consider the level of ordinary skill in the pertinent art at the time of the invention. *Graham*, 383 U.S. at 17.

Petitioner contends, citing supporting testimony by its witness, Dr. Trumper, that a person of ordinary skill in the art would have "a bachelor's degree in mechanical or electrical engineering, or an equivalent

[8] Patent Owner does not present objective evidence of non-obviousness. *See generally* PO Resp.

degree, and at least two years of experience in the design of electric motors." Pet. 19; Ex. 1002 ¶ 32 ("Trumper Decl."). Petitioner also asserts a person of ordinary skill in the art "would be familiar with the fundamentals of electric motor design and operation, the concept of encapsulating various components in an electric motor, the types of materials that could be used for encapsulation and their thermal and dimensional properties (*e.g.*, CLTE), and thermofluid concepts," as well as "various techniques for manufacturing encapsulated motors, including by the use of injection molding." *Id.* (citing Ex. 1002 ¶ 32).

In its Response, Patent Owner contends, citing testimony of its witness Dr. Beaman, "a person of ordinary skill in the art would have a Bachelor's degree in mechanical engineering and at least one year of experience, but no more than two years, in the application of heat transfer for electromechanical devices." PO Resp. 18 (citing Ex. 2007 ¶ 25). Patent Owner contends that Dr. Trumper's testimony misstates the level of ordinary skill in the art because Dr. Trumper asserts that a person of ordinary skill in the art may have a Bachelor's degree in electrical engineering and "at least two years of experience in the design of electric motors." *Id.* (citing Ex. 1002 ¶ 32). Patent Owner asserts that "Dr. Beaman's testimony that a person of ordinary skill in the art would have a degree in mechanical engineering, not electrical engineering, is more credible in view of the fact that 'the emphasis of the '509 Patent is on heat transfer, not the electrical components of a motor or other electromagnetic device.'" *Id.* (quoting Ex. 2007 ¶ 23); *see also id.* at 16–18 (arguing the field of the invention of the '509 Patent is "cooling systems for electromagnetic devices," and Dr. Trumper's "testimony does not adequately identify the field of the

invention"; reproducing Ex. 1001, 1:6–9; Ex. 1002 ¶ 32; citing Ex. 1001, claims 1, 3, 4, 5, and 14; Ex. 2007 ¶¶ 21–22; Ex. 2006, 12:5–17).

Patent Owner argues that Dr. Trumper misstates the level of ordinary skill in the art, which "appears to be designed to inaccurately suggest that Dr. Trumper himself—who has degrees in electrical engineering but not mechanical engineering (Ex. 1002 at 65)—is a person of ordinary skill in the art." *See* PO Resp. 18. Patent Owner contends that Dr. Trumper's opinions, therefore, are not from the legally correct perspective that would have been necessary for Petitioner to make out any case of obviousness. *See id*. at 19. Patent Owner contends that Dr. Trumper's opinions should be disregarded or given little weight. *See id.*

In reply, Petitioner argues that Patent Owner's position that a person of ordinary skill in the art must have a mechanical engineering degree and excluding an electrical engineering degree conflicts with the definition that Patent Owner proposed in other proceedings. *See* Reply 1–2. According to Petitioner, "[i]n parallel infringement action before the U.S. International Trade Commission (ITC), [Patent Owner] and its expert in that proceeding, Dr. Hamid Toliyat, broadly propose that a skilled artisan 'would have a degree in *electrical engineering*, mechanical engineering, materials engineering, manufacturing engineering and/or a related field.'" *Id*. at 2 (citing Ex. 1017 ¶¶ 26–27) (emphasis added by Petitioner). Petitioner also asserts that when it confronted Patent Owner's witness, Dr. Charles A. Garris, with Patent Owner's inconsistent positions on the level of ordinary skill, Dr. Garris admitted that a person with only an electrical engineering degree along with relevant experience would meet the definition of a person of ordinary skill in the art. *See id*. (quoting Ex. 1016, 22:12–17, 23:14–21).

Petitioner further asserts that Dr. Garris admitted that a person without a mechanical engineering degree would meet the definition of a person of ordinary skill in the art. *See id.* (citing Ex. 1016, 24:18–22). According to Petitioner, the correct definition of a person of ordinary skill in the art, as proposed by Patent Owner in the ITC, and by Patent Owner's witness in this proceeding, includes a person having an electrical engineering degree. *See id.* at 2–3 (citing; Ex. 1016, 22:12–17, 23:14–21, 24:18–22; Ex. 1017 ¶¶ 26–27).

Petitioner contends that under either party's definition, Dr. Trumper can readily apply the viewpoint of a person of ordinary skill in the art based on his Ph.D. in electrical engineering, long tenure as professor in the mechanical engineering department at MIT, extensive experience in application of heat transfer for electromechanical devices, and other relevant experience detailed in his Declaration and CV. *See* Reply 6–7 (citing Ex. 1002 ¶¶ 2–27, pp. 65–111).

We do not agree with Patent Owner's arguments and agree with Petitioner that Patent Owner's definition of a person of ordinary skill in the art is limited needlessly. Although Patent Owner is correct that the '509 Patent Specification discloses that the field of the invention is directed to electromagnetic devices that include heat exchange mechanisms (*see* PO Resp. 3; *see generally* Ex. 1001), we do not agree that the definition of a person of ordinary skill in the art should be limited to a person having a mechanical engineering degree merely because "the emphasis of the '509 Patent is on heat transfer, not the electrical components of a motor or other electromagnetic device." Patent Owner's definition needlessly excludes persons who earned a bachelor's degree in electrical engineering or

other related degrees, but also had experience working on electromagnetic devices that include heat exchange mechanisms. As pointed out by Petitioner, Patent Owner's definition of a person of ordinary skill in the art is undermined by conflicting testimony by Patent Owner's witnesses, Dr. Garris and Dr. Toliyat, in this proceeding and in related proceedings. Patent Owner's arguments also overlook that Dr. Trumper, in addition to addressing formal education, explained that a person of ordinary skill in the art "would have . . . two years of **experience in the design of electric motors**. . . . [and] would be familiar with the fundamentals of electric motor design and operation . . . , and **thermofluid concepts**." Ex. 1002 ¶ 32 (emphasis added).

Based upon our review of the '509 Patent and the types of problems and solutions described in the '509 Patent and applied prior art, we determine that a person of ordinary skill in the art would have a bachelor's degree in mechanical engineering, electrical engineering, chemical engineering, or an equivalent degree, and two years of experience in the design of electric motors and electromagnetic devices, including familiarity with the design, operation, materials, and fabrication of such devices, including their thermal and fluid characteristics. The evidence of record demonstrates sufficiently that Dr. Trumper and Dr. Beaman each have sufficient education (*see* Ex. 1002 ¶ 3, Appendix A. p. 65; Ex. 2007 ¶ 5) and experience (*see* Ex. 1002 ¶¶ 2, 4–27, Appendix A, pp. 65–111; Ex. 2007 ¶¶ 6–8) to offer testimony from the perspective of a person of ordinary skill in the art in this proceeding. For these reasons, we decline to disregard or give little weight to Dr. Trumper's testimony.

D. Petitioner's Asserted Grounds Unpatentability

1. Unpatentability under 35 U.S.C. § 103(a) of Claims 1–3, 7, 14, and 15 over Umeda, Raible, and Neal

a. Overview of Umeda (Ex. 1004)

Umeda discloses a pump motor with enhanced cooling properties. *See* Ex. 1004 ¶ 1.

Figure 1 of Umeda is reproduced below.

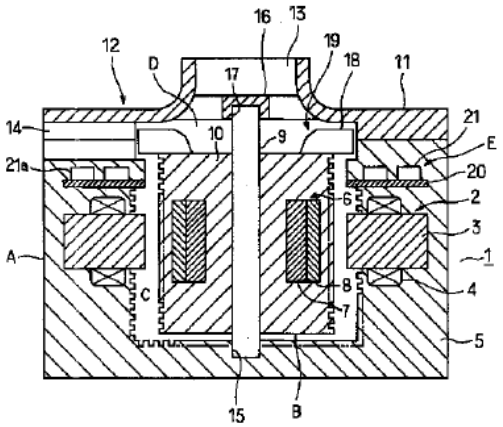

Figure 1 of Umeda depicts motor 1 including molded stator A and molded rotor B. *See* Ex. 1004 ¶¶ 14–15. Molded stator A is formed from resin 5, and includes stator coils 4 fitted to stator core 3. *See id.* ¶¶ 14–15, 20. Molded rotor B is formed of resin 10, and includes cylindrical rotor core 7 and permanent magnet 8. *See id.* ¶ 15. "Resin that has high thermal conductivity, such as acrylic resin, is used as the resin 5 and 10 of the molded stator A and molded rotor B." *Id*. Casing cover 11 and molded stator A together form pump casing 12, with intake port 13 and discharge port 14. *See id.* ¶ 16. In operation, "liquid is taken into the internal space D of the pump casing 12 from the intake port 13 . . . and is then discharged as high-pressure fluid from the discharge port 14." *Id.* ¶ 21. "[L]iquid taken

into the pump casing 12 then flows into the internal space C of the molded stator A to cool the molded stator A and the molded rotor B." *Id.* ¶ 22.

b. Overview of Raible (Ex. 1010)

Raible discloses a blood pump including a housing that journals a rotor. *See* Ex. 1010, Abstract, 9:17–26, Fig. 8. The housing is made of a sterilizable injection molded polymer material, such as polycarbonate. *Id.* at 9:26–38.

c. Overview of Neal (Ex. 1014)

Neal discloses a high speed spindle motor constructed from a stator assembly and a monolithic body of injection-molded thermoplastic substantially encapsulating the stator. *See* Ex. 1014, Abstract, 5:17–49. The stator includes a magnetically inducible core with wire windings on poles which serve as conductors. *See id.* at 4:3–10, 5:5–8. The benefits of a thermoplastic encapsulated stator include fewer parts, easier assembly, reduced manufacturing cost, reduced stack-up tolerances, and greater efficiency and performance. *See id*. at 4:66–5:4, 8:8–24, 9:37–39, 21:14–35; *see also id.* at 1:62–2:2 (discussing drawbacks of conventional motors).

d. Analysis of Claims 1 and 14

"A fluid-cooled electromagnetic field-functioning device" (claim 1) / "A fluid-cooled motor" (claim 14)

Petitioner asserts that Umeda teaches a "fluid-cooled electromagnetic field-functioning device" and a "fluid-cooled motor" based on Umeda's description of a rotor, stator, coils, magnets, and description of cooling. *See* Pet. 20 (citing Ex. 1004 ¶¶ 5–7, 14, 15, 20, 21; Ex. 1002 ¶¶ 65–67). Patent Owner does not dispute Petitioner's contentions addressing the preamble recitation. *See* PO Resp. 19–38.

We find that, based on Petitioner's cited supporting evidence, Umeda teaches or suggests a fluid-cooled electromagnetic field-functioning device and a fluid-cooled motor. *See* Ex. 1004 ¶¶ 5–6.

"at least one electrical conductor"(claims 1 and 14)

Petitioner contends that Umdea teaches "at least one electrical conductor" based on Umeda's description of coils 4 on stator core 3. *See* Pet. 20 (citing Ex. 1004 ¶ 14; Ex. 1002 ¶ 68). Patent Owner does not dispute Petitioner's contentions addressing the at least one electrical conductor. *See* PO Resp. 19–38. We find that, based on Petitioner's cited supporting evidence, Umeda's coils 4 teach or suggest at least one electrical conductor. *See* Ex. 1004 ¶ 14.

"monolithic body" (claims 1 and 14)

Petitioner asserts that Umeda's pump casing 12 formed from molded stator A and cover 11 is not a "monolithic body" in accordance with Petitioner's initial proposed construction asserting that a monolithic body excludes multiple pieces joined together. *See* Pet. 17–19, 26. Consistent with our broadest reasonable construction for monolithic body, which does not exclude multiple pieces joined together as addressed above in Section II.A.3., we find that Umeda's pump casing 12 formed from molded stator A and cover 11 teaches or suggests a monolithic body. *See* Ex. 1004 ¶ 16.

Notwithstanding our finding that Umeda alone teaches or suggests a monolithic body, Petitioner also contends that Raible teaches a pump with a housing injection molded as a polycarbonate thermoplastic single piece over a rotor member. *See* Pet. 26–27 (reproducing Ex. 1010, Fig. 8 with annotations; citing Ex. 1010, 9:17–38; Ex. 1001, 7:26–55). Petitioner also asserts that Neal teaches the benefits of using a monolithic body instead of a

body formed of multiple parts. *See id.* at 23 (citing Ex. 1014, 1:62–2:2, 4:67–5:4, 8:8–24). Specifically, Petitioner cites Neal's teaching that using multiple parts results in stack-up tolerances and increased manufacturing costs, but a single unitized body provides alignment of the motor components and couples the components to one another, and reduces stack-up tolerances and manufacturing costs. *See id*. at 23 (citing Ex. 1105, 8:15–17, 8:20–23), 27 (citing Ex. 1002 ¶ 88).

Petitioner contends that it would have been obvious to one with ordinary skill in the art to modify Umeda by forming pump casing 12, consisting of cover 11 and molded stator A, as a monolithic body in view of Raible and Neal's teachings because Neal provides a specific motivation for doing so—to reduce the number of parts in the motor housing, avoid stack-up tolerances, better align components, and reduce manufacturing costs. *See* Pet. 27–28 (citing Ex. 1002 ¶ 88). Patent Owner does not dispute the combined teachings of Umeda, Raible, and Neal, and Petitioner's obviousness assertions with respect to this limitation. *See* PO Resp. 19–38.

We agree with Petitioner and find that the combination of Umeda, Raible, and Neal teaches or suggests a monolithic body. *See* Ex. 1004 ¶ 16; Ex. 1010, 9:17–32, Fig. 8; Ex. 1014, 1:62–2:2, 4:67–5:4, 8:8–24. We also determine that Petitioner has provided sufficient articulated reasoning with rational underpinning to establish that a person of ordinary skill in the art would have modified the teachings of Umeda in view of Raible and Neal to form Umeda's pump casing 12 comprising molded stator A and cover 11 as a single part to form a monolithic body, to achieve the benefits taught by Neal, e.g., to reduce the number of part and avoid stack-up tolerances. *See KSR*, 550 U.S. at 418 (quoting *Kahn*, 441 F.3d at 988). Based on the

evidence before us, we determine that the combined teachings of Umeda, Raible, and Neal would have rendered obvious a monolithic body.

"monolithic body of injection molded thermoplastic material" (claims 1 and 14)

Petitioner acknowledges that Umeda does not specifically disclose the monolithic body is made of injection molded thermoplastic, but that Umeda discloses molded stator A and cover 11 are formed with resin, such as an acrylic resin. *See* Pet. 21–22 (citing Ex. 1004 ¶¶ 15–16). Petitioner contends that an acrylic resin may be a thermoplastic material, and acrylic resins were known to be well-suited for injection molding. *See id*. at 22 (citing Ex. 1002 ¶ 75). Petitioner asserts that Neal discloses a motor with a monolithic body made of injection-molded thermoplastic. *See id.* (citing Ex. 1014, 5:5–48, 6:26–59, 10:15–25, 17:53–58, 21:24–26).

Petitioner asserts that it would have been obvious to one with ordinary skill in the art to form the monolithic body of Umeda out of injection-molded thermoplastic as suggested by Neal, and to use a preferred thermoplastic material providing high thermal conductivity between the stator and cooling means to achieve the same goals as Neal. *See* Pet. 24–26 (citing Ex. 1002 ¶¶ 78–80). Petitioner supports its contention with the following assertions: (1) Umeda teaches the monolithic body may be formed from acrylic resin, which could be a thermoplastic material suited for injection molding (*see* Pet. 22 (citing Ex. 1004 ¶¶ 15–16; Ex. 1002 ¶ 75), 25); (2) Umeda teaches the material should have high thermal conductivity to enhance cooling of the motor (*see* Pet. 24 (citing Ex. 1004 ¶¶ 8, 15, 22, 56)); (3) Neal teaches the material selected to form the monolithic body should allow for sufficient heat transfer for cooling motor components (*see*

Pet. 24 (citing Ex. 1014, 6:26–59, 17:53–58, 18:4–10, 20:39–52)); (4) Neal teaches thermoplastic, epoxy, and thermosetting phase change materials can be used for encapsulating motor components (citing Ex. 1014, 5:41–49); (5) Neal teaches thermoplastic is a preferred material and injection molding is a preferred method for forming the monolithic body (*see* Pet. 24 (citing Ex. 1014, 5:27–48, 6:26–59, 14:27–30, 17:53–58, 21:24–46)); and (6) prior to 2006, it was well-known to use injection molding for encapsulating pump motors (*see* Pet. 24 (citing Ex. 1002 ¶ 79)).

Patent Owner disputes Petitioner's contentions. *See* PO Resp. 25–28. Patent Owner argues that a person of ordinary skill in the art would have recognized that Umeda's "molded stator A is fabricated using mold casting with liquid resin," which is the "simplest and most economical manner in which to fabricate a resin component." *Id.* at 25 (citing Ex. 2008 ¶ 52); *see id*. at 25–26 (reproducing Ex. 2010, Fig. 16.2; citing Ex. 1004 ¶ 20; Ex. 2008 ¶ 53). According to Patent Owner, "[i]njection molding would work poorly for the geometry of Umeda's molded stator [A], because the molded stator includes thick walls that would result in fabrication defects due to uneven cooling, such as dimples and internal voids." *Id.* at 26–27 (reproducing Umeda's Figure 1 with Patent Owner's annotations identifying purported "regions of thick resin"; Ex. 2010, Fig. 12.9 (identifying ribs as a design modification to eliminate voids in thick parts); citing Ex. 2008 ¶¶ 54, 55).

According to Patent Owner,

> [i]n the absence of a possible advantage or direction to use injection molding a POSITA would consider a thick molded component to be formed using a casting process. . . . A POSITA would know that injection molding should also be avoided when

> there are substantial variations of material thickness in the part, as is seen in Umeda.

PO Resp. 25 (citing Ex. 2008 ¶ 52). Patent Owner also contrasts Umeda's geometry with that of Neal, which Patent Owner contends has "thin walls that are well-suited for injection molding." *Id.* at 27–28 (reproducing Ex. 1014, Fig. 7 with annotations; citing Ex. 2008 ¶ 56). According to Patent Owner, "[b]ecause of these fundamentally different shapes [between Umeda and Neal], the use of injection molded thermoplastic for certain components of Neal would not motivate a person of ordinary skill in the art to use injection molding for Umeda's thick-walled stator body." *Id.* at 28 (citing Ex. 2008 ¶ 56).

We do not agree with Patent Owner's arguments. Patent Owner does not dispute that injection-molding was a known technique, or that using injection-molded thermoplastic to form Umeda's pump casing would have resulted in the thermal conductivity benefits taught by Neal. *See* PO Resp. 25–28. Rather, Patent Owner contends that Umeda would have been understood to teach casting instead of injection-molding. *Id.* at 25–26. Even if this were the case, Patent Owner does not address Petitioner's proposal to modify Umeda's molded stator A and cover 11 in light of Neal's teaching of the benefits of using injection-molded thermoplastics. More specifically, Patent Owner does not explain sufficiently why Umeda's likely use of casting would have counseled against the proposed modification.

We also do not agree with Patent Owner's argument that injection-molding would work poorly for the thick portions of Umeda's molded stator. PO Resp. 26–27. Patent Owner relies upon Dr. Garris's testimony to support this argument, and Dr. Garris, in turn, relies upon selected portions

of Exhibit 2010, a book entitled "Plastics, Materials and Processing" (Ex. 2010, hereinafter the "Plastics Book"). Ex. 2008 ¶¶ 128–132. Dr. Garris cites to Figure 12.19 of the Plastics Book, wherein the accompanying description explains that dimples may occur in thick sections of an injection-molded part, because thick sections shrink more than surrounding areas. *Id.* ¶ 49; Ex. 2010, 64. "To prevent this from occurring," the Plastics Book explains, "all sections of the part should be the same size and should be as thin as possible." Ex. 2010, 64 (also explaining that ribs can provide advantages over thick sections).

The cited portions of the Plastics Book, however, do not indicate any specific dimensions of thickness at which dimpling becomes a problem. *See* Ex. 2010, 64–65. Rather, the Plastics Book explains that the appropriate thickness for a part "usually depends on the type of resin used," wherein "[h]igh-viscosity resins would have higher minimum thicknesses than would low-viscosity resins." *Id.* at 65. This disclosure suggests that the resin appropriate for the part's desired thickness may be chosen to avoid or mitigate the dimpling problem.

Figure 12.20 of the Plastics Book is reproduced below.

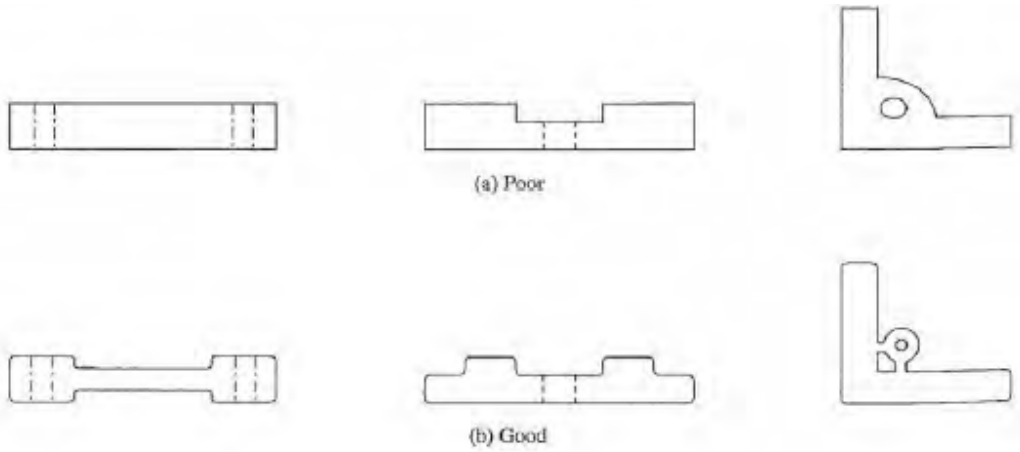

Figure 12.20 Elimination of sharp corners and redesign to make thicknesses more uniform in injection molded parts.

Figure 12.20 depicts several examples of injection-molded parts; row (a) depicts parts with a "Poor" configuration, and row (b) depicts parts with a "Good" configuration, in which sharp corners are eliminated and thicknesses are more uniform. Ex. 2010, 65. At least two of the disclosed examples deemed "Good"—the left and center examples of row (b)—depict parts in which there are relatively thinner *and thicker* portions, but are nonetheless considered to be "Good" examples. Thus, we disagree with Patent Owner's position that the mere presence of some thicker portions of a part renders the part unsuitable for injection molding. Patent Owner's position is not supported sufficiently by Patent Owner's cited evidence.

As related to Umeda, Patent Owner does not provide sufficient evidence to conclude that the relative dimensions of Umeda's molded stator A, including the portions identified by Patent Owner as "thick," are a thickness that would render the molded stator A unsuitable for injection molding. *See* PO Resp. 27 (reproducing Umeda's Figure 1 with annotations indicating "regions of thick resin"). Umeda does not state that Figure 1 is drawn to scale, and Patent Owner does not identify the dimensions of the

"regions of thick resin" in Umeda's molded stator. Patent Owner also does not compare those relative dimensions to the encapsulating bodies in, e.g., the '509 Patent or Neal, in which injection molding apparently was suitable. *Compare* PO Resp. 27 (reproducing Umeda's Figure 1 with Patent Owner's annotations), *with* Reply 10–11 (reproducing Umeda's Figure 1 with Patent Owner's annotations and comparing with Neal's Figure 7 with Petitioner's annotations and Figure 7 of the '509 Patent with Petitioner's annotations showing portions of relatively thicker thermoplastic). "[P]atent drawings do not define the precise proportions of the elements and may not be relied on to show particular sizes if the specification is completely silent on the issue." *Hockerson-Halberstadt, Inc. v. Avia Grp. Int'l., Inc.*, 222 F.3d 951, 956 (Fed. Cir. 2000).

We have considered the parties' contentions and cited evidence, and we are persuaded by Petitioner's arguments. We find that the combined teachings of Umeda, Raible, and Neal teach or suggest a monolithic body of injection molded thermoplastic material. *See* Ex. 1004 ¶¶ 8, 15–16, 22, 56; Ex. 1010, 9:17–32, Fig. 8; Ex. 1014, 1:62–2:2, 4:67–5:48, 6:26–59, 8:8–24 , 10:15–25, 17:53–58, 21:24–26. We determine that Petitioner sets forth sufficient articulated reasoning with rational underpinning to support the conclusion that it would have been obvious to one with ordinary skill in the art to form the monolithic body of Umeda and the monolithic body of Umeda, Raible, and Neal out of injection-molded thermoplastic as suggested by Neal, and to use a preferred thermoplastic material providing high thermal conductivity between the stator and cooling means to achieve the same goals as Neal. *See* Pet. 24–26; *KSR*, 550 U.S. at 418 (quoting *Kahn*, 441 F.3d at 988). Accordingly, based on the evidence before us, we

determine that the combined teachings of Umeda, Raible, and Neal would have rendered obvious a monolithic body of injection molded thermoplastic.

"a monolithic body . . . substantially encapsulating the at least one conductor"(claims 1 and 14) and the monolithic body . . . substantially encapsulates a stator"(claim 14)

Petitioner asserts that Umeda teaches "at least one electrical conductor; a monolithic body . . . substantially encapsulating the at least one conductor," as recited in claims 1 and 14, and "the monolithic body . . . substantially encapsulates a stator of the motor," as recited in claim 14, based on Umeda's disclosure of coils 4 on stator core 3 encapsulated with resin 5. *See* Pet. 20–21 (reproducing Ex. 1004, Fig. 1 with annotations; citing Ex. 1004 ¶ 14; Ex. 1002 ¶¶ 68–70), Pet. 29, 32–33 (citing Ex. 1004 ¶¶ 7, 8, 14; Ex. 1002 ¶¶ 110–112). Consistent with the construction for "substantially encapsulating," addressed in Section II.A.5., Petitioner further asserts that a person of ordinary skill in the art would understand that resin 5 of molded stator A is rigidly fixed to stator core 3 and coils 4 such that the resin, core, and coils behave as a single component with respect to harmonic oscillation vibration. *See id*. at 21 (citing Ex. 1002 ¶¶ 71–74).

Patent Owner contends that Umeda does not teach these limitations because Umeda's coils 4 are not disclosed as being substantially encapsulated by molded stator A. *See* PO Resp. 29 (citing Ex. 2008 ¶ 58). Patent Owner asserts that Umeda does not disclose precisely how much of the coils 4 are covered by the material of molded stator A, but significant portions of the windings of coil 4 are uncovered by the material of molded stator A. *See id.* (citing Ex. 2008 ¶ 59).

Figure 1 of Umeda with Patent Owner's annotations is reproduced below.

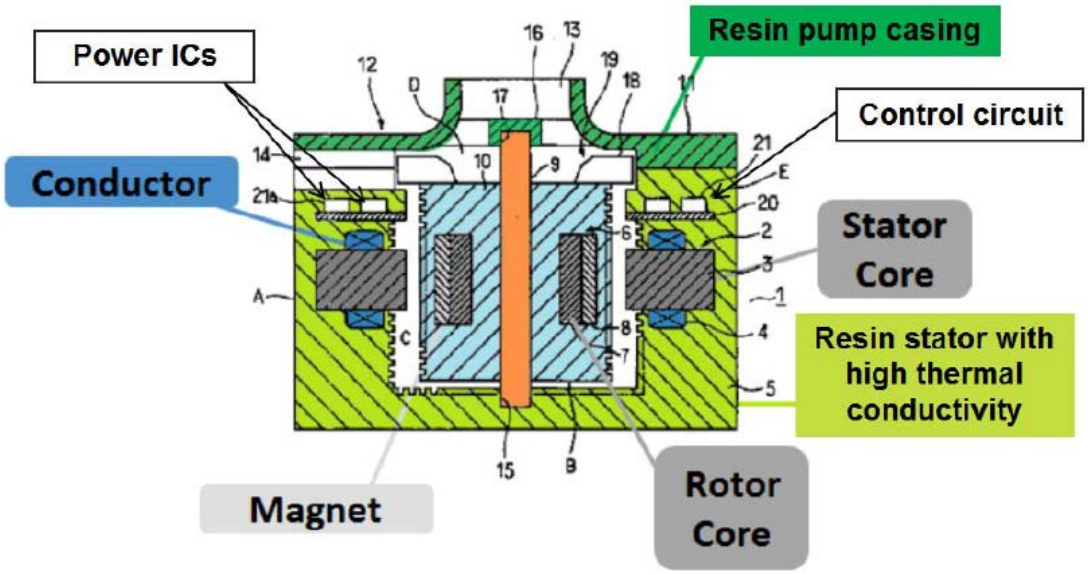

Figure 1 of Umeda with Patent Owner's annotations depicts conductor/coil 4 in blue, molded stator A in light green, stator core 3 in gray, and casing cover 11 in dark green. *See* PO Resp. 30. According to Patent Owner, annotated "Figure 1 shows only a portion of the coil 4 (blue) in contact with the material of the molded stator A (light green)." *Id.* at 29 (citing Ex. 2008 ¶ 60).

Patent Owner also asserts that Umeda does not teach that the resin 5 of molded stator A extends within the interior of the stator core 3. *See id.* (citing Ex. 2008 ¶ 60). According to Patent Owner, "[a] person of ordinary skill in the art would recognize that the stator core 3 is a hollow annular structure that includes tooth projections oriented radially inward toward the rotor." *Id.* at 30 (citing Ex. 2008 ¶ 61). In support of its assertions, Patent Owner reproduces Figures 1 and 2 from U.S. Pat. No. 4,287,446 to Lill (Ex. 2011, "Lill"), asserting that Lill depicts an example of Umeda's stator core geometry, in which "windings are coiled around the tooth projections of

the core, which creates a radially inward magnetic flux that is directed by the teeth towards the magnets on the axially-located rotor." *Id.* at 30–31 (citing Ex. 2008 ¶ 62). Patent Owner also reproduces Figure 17 of Umeda as providing an example illustration of coil 4 coiled around a tooth of stator core 3. *See id*. at 31–32.

Patent Owner also argues that, in Umeda, the only portions of coil 4 that are shown to be in contact with resin 5 of molded stator A are the portions extending above and below the edges of the core 3. *See* PO Resp. 32 (citing Ex. 2008 ¶ 64). According to Patent Owner, Umeda teaches the portions of coil 4 within stator core 3 is exposed to internal space C, where liquid flows to cool the heat generating components, rather than covered by resin 5. *See id.* (citing Ex. 1004 ¶¶ 16, 22, 26; Ex. 2008 ¶ 64). Patent Owner contends that Umeda teaches "coil [4] of the stator preferably would be fitted to the stator core [3] so as to leave gaps and the resin [5] that molded the stator would be molded so as not to block the gaps between the coils." *Id.* (quoting Ex. 1004 ¶ 11; citing Ex. 2008 ¶ 64). Patent Owner asserts that the portions of coils 4 not in contact with the material of molded stator A are not minor areas. *See id.* at 33 (citing Ex. 2008 ¶ 65).

We do not agree with Patent Owner's arguments because they are predicated on a requirement—not supported by the claims—that the conductor is *covered* by the monolithic body, and that coils are *contacted* by the monolithic body. As discussed above in Section II.A.5., we determine that the broadest reasonable interpretation of "substantially encapsulating" is "either entirely surrounding or surrounding almost all except for minor areas that might be exposed, such that the elements are rigidly fixed together and behave as a single component with respect to harmonic oscillation

vibration." The broadest reasonable construction for "substantially encapsulating" does not include any additional requirements regarding contact with the monolithic body or coverage by the monolithic body. As can be appreciated by reference to Figure 1 of Umeda with Patent Owner's annotations, Umeda depicts resin 5 of molded stator A surrounding coils 4, and directly contacting coils 4 on three sides. *See* PO Resp. 30. Although one of the sides of coil 4 interfaces with stator core 3, as shown in Figure 1 of Umeda with Patent Owner's annotations, the resin 5 of molded stator A (in green), nevertheless, entirely surrounds coils 4 (in blue) by covering the top, bottom, left and right sides of coils 4, consistent with our construction of "substantially encapsulating."

We also do not agree with Patent Owner's argument that there are gaps between Umeda's coils 4, uncovered by resin, and that portions of coils 4 are exposed to internal space C, to permit cooling. *See* PO Resp. 32 (citing Ex. 1004 ¶¶ 11, 16, 22, 26). As an initial matter, even if gaps were present at the interface between coils 4 and stator core 3, this does not alter the fact that the coils remain substantially encapsulated by molded stator A, as discussed above. In addition, Umeda explains that molded stator A is cooled by the liquid flowing in internal space C, due to several factors. First, molded stator A is "formed to be uneven" and "rough," to increase the area of molded stator A in contact with the cooling fluid. *See* Ex. 1004 ¶¶ 19, 22. Second, cooling performance is enhanced by the "outstanding thermal conductivity" associated with the material from which molded stator A is formed. *Id.* ¶ 22. In connection with Figure 1, Umeda's primary embodiment (as cited by Petitioner) does not disclose the presence of gaps within coils 4 that are uncovered by resin. *See* Ex. 1004 ¶¶ 14–23.

In addition, Patent Owner cites paragraph 11 of Umeda, which discloses: "The coil of the stator preferably would be fitted to the stator core so as to leave gaps and the resin that molded the stator would be molded so as not to block the gaps between the coils (Claim 16)." Ex. 1004 ¶ 11. This is depicted in Figure 16, which "illustrates the fifteenth embodiment of the present invention," in which cooling performance is enhanced

> by increasing the surface area of the molded stator A. Specifically, longitudinal grooves 37 are formed at the tip of the teeth 3a . . . of the control circuit E, and gaps g are formed between the coils 4. The stator 2 is molded from resin 5 so that the longitudinal grooves 37 and gaps g would remain.

Ex. 1004 ¶ 41. Figure 16 of Umeda, however, depicts resin 5 covering gaps g. *Id.* at Fig. 16; Reply 12–13 (reproducing Fig. 16 with annotations). For these reasons, we do not agree with Patent Owner's arguments that Umeda does not teach the monolithic body substantially encapsulates the at least one electrical conductor.

For all of the foregoing reasons and based on the cited evidence, we find that Umeda teaches or suggests a monolithic body substantially encapsulating the at least one conductor, and the monolithic body substantially encapsulates a stator of the motor. And based on Petitioner's undisputed cited supporting evidence, we also find that Umeda teaches or suggests the monolithic body is rigidly fixed to at least one conductor and the stator, such that the monolithic body, at least one conductor, and stator behave as a single component with respect to harmonic oscillation vibration. *See* Ex. 1002 ¶¶ 71–74.

"non-linear heat transfer fluid pathway in the monolithic body, with at least one fluid inlet and at least one fluid outlet to said pathway to allow for passage of heat transfer fluid through the pathway"(claims 1 and 14)

Petitioner contends that Umeda discloses "a non-linear heat transfer fluid pathway in the monolithic body with at least one fluid inlet and at least one fluid outlet to said pathway to allow for passage of heat transfer fluid through the pathway," as recited in claims 1 and 14, based on Umeda's disclosure of intake port 13, internal spaces C and D, and discharge port 14 embedded in and integral with molded stator A, molded rotor B, and casing cover 11. *See* Pet. 25–26 (reproducing Ex. 1004, Fig. 1 with annotations; quoting Ex. 1004 ¶¶ 6, 9; citing Ex. 1004 ¶ 19; Ex. 1002 ¶ 82), 28 (citing Ex. 1004 ¶ 16, Fig. 1; Ex. 1002 ¶¶ 91–92). According to Petitioner, "fluid pathway from intake port 13, through internal spaces C and D, and out discharge port 14 channel is 'non-linear' as defined in the '509 patent because it could not be formed by a simple core pin in an injection mold tool." *See id*. at 26 (citing Ex. 1001, 18:15–18; Ex. 1002 ¶ 83).

Patent Owner argues Umeda's does not teach a fluid pathway in the monolithic body because Petitioner's alleged pathway, including internal spaces C and D is between the internal walls of the molded stator A and casing cover 11 (which Petitioner alleges constitutes the monolithic body), and the external wall of molded rotor B. *See* PO Resp. 20 (citing Ex. 2007 ¶ 49); *see id*. at 21 (reproducing Figure 1 of Umeda with Petitioner's annotations). According to Patent Owner "internal spaces C and D are not channels formed ***in*** the alleged monolithic body itself," but are "simply the gap *between* molded rotor B and internal walls of casing cover 11 and the molded stator A." *Id.* at 21 (citing Ex. 2007 ¶ 51; Ex. 2006, 49:16–24, 51:10–14); *see id.* at 20 (citing Ex. 2007 ¶¶ 49–50; similar argument); *see*

also Tr. 20:13–21:3 (analogizing the monolithic body to walls of a fort), 26:12–27:1 (arguing that bounded by walls is different than in the walls).

In reply, Petitioner asserts that Umeda's pathway is in the monolithic body, when the monolithic body is understood as comprising resin 5 of molded stator A and casing cover 11, collectively. *See* Reply 6. Petitioner also argues that, because molded rotor B is also in the monolithic body (both resin 5 of molded stator A and casing cover 11), the fluid contact with external walls of molded rotor B is consistent with the fluid pathway being in the monolithic body. *See id.*

We do not agree with Patent Owner's arguments because they are premised on a narrow construction of "in the monolithic body" as requiring the pathway to be formed *in the walls* of the monolithic body, while precluding the pathway from being bounded by the monolithic body. The claim language is not so limited because a specific location of the pathway "in the monolithic body" is not recited.

Patent Owner also argues that Dr. Trumper undermined the credibility of his testimony "by making it apparent that he did not conduct a proper claim construction analysis of the 'heat transfer fluid pathway' limitation." PO Resp. 23. Patent Owner contends "Dr. Trumper[] attempt[ed] to define 'heat transfer fluid pathway' by referring to the ***alleged prior art***—rather than the claim language, the specification, and the prosecution history of the '509 Patent." *Id.* According to Patent Owner, when asked for his understanding of "heat transfer fluid pathway," Dr. Trumper recited paragraphs of his declaration asserting that the fluid pathways of Stephan and Umeda constitute a "heat transfer fluid pathway." *See id.* at 23 (quoting Ex. 2006, 22:24–24:16). Patent Owner contends that "because it is apparent

that Dr. Trumper did not conduct a proper claim construction analysis focused on the intrinsic record of the ’509 Patent, his conclusory assertions that ‘heat transfer fluid pathway’ means whatever it needs to mean to ensnare . . . Umeda should be given no weight.” *Id.* at 24.

We do not agree with Patent Owner.[9] The Federal Circuit has cautioned that “we must disregard the testimony of an expert that is . . . ‘based on an incorrect understanding of the claim[s].’” *Homeland Housewares, LLC v. Whirlpool Corp.*, 865 F.3d 1372, 1378 (Fed. Cir. 2011) (quoting *Cordis Corp. v. Boston Sci. Corp.*, 658 F.3d 1347, 1357 (Fed. Cir. 2011)). Patent Owner, however, does not allege that Dr. Trumper’s opinion was based on an incorrect understanding of the claim term “pathway.” Dr. Trumper considered the ’509 Patent Specification in rendering his opinions. For example, Dr. Trumper addresses the ’509 Patent Specification disclosure of a “non-linear fluid pathway,” testifying with reference to Figures 14 and 15 of the ’509 Patent that “[t]he device has at least one electrical conductor encapsulated by a monolithic body of thermoplastic material with a nonlinear fluid pathway through the body through which at least a portion of the fluid conveyed by the device passes.” Ex. 1002 ¶ 44

[9] We also do not agree with Patent Owner’s suggestion that Dr. Trumper’s testimony, in its entirety, should be disregarded based on Patent Owner’s allegations that Dr. Trumper’s claim construction strategy demonstrates that he has taken on the role of an advocate focused on reaching the conclusion that supports his clients’ arguments, without conducting complete and legally proper claim construction and patentability analyses, and, therefore, calls into question the reliability of all of Dr. Trumper’s opinions in this IPR. *See* PO Resp. 24. Patent Owner did not file a Motion to Exclude Dr. Trumper’s testimony, and does not otherwise articulate a sufficient basis for disregarding the entirety of his testimony.

(citing Ex. 1001, 16:12–31). Dr. Trumper also cites the ’509 patent’s explanation that “ non-linear’ as defined in the ’509 patent” means “could not be formed by a simple core pin in an injection mold tool.” Ex. 1002 ¶¶ 83–84 (quoting Ex. 1001, 18:15–18). That Dr. Trumper did not provide an explicit claim construction analysis for “non-linear heat transfer pathway in the monolithic body” in his Declaration and upon cross-examination questioning is insufficient to show that his understanding of the claim limitation was incorrect.

For the foregoing reasons, and based on the evidence before us, we find that Umeda teaches or suggests a non-linear heat transfer fluid pathway in the monolithic body with at least one fluid inlet and at least one fluid outlet to said pathway to allow for passage of heat transfer fluid through the pathway.

“monolithic body completely covers the exterior of the device except for the at least one fluid inlet and the at least one fluid outlet” (claim 1)

Petitioner contends that Umeda teaches “the monolithic body completely covers the exterior of the device except for the at least one fluid inlet and the at least one fluid outlet,” as recited in claim 1, based on stator mold A and casing cover 11 making up the pump casing that completely covers the exterior of the device except for the fluid inlet and outlet. *See* Pet. 29 (citing Ex. 1004, Fig. 1; Ex. 1002 ¶¶ 94–95).

Patent Owner argues Umeda does not teach this limitation because molded stator A is an exterior component of Umeda’s motor but is not covered by a monolithic body. *See* PO Resp. 34 (citing Ex. 2007 ¶ 58); *see id.* at 34–35 (reproducing Umeda Figure 1 with Petitioner’s annotations). According to Patent Owner, “[t]he ‘monolithic body completely covers’

limitation requires the monolithic body to cover every external component of the device, except for the inlet and the outlet." *Id.* at 35 (citing Ex. 2007 ¶ 59). According to Patent Owner, "[***b***]***y its very terms***, the 'molded stator A' disclosed by Umeda is, in fact, one of the stators of Umeda's motor." *Id.* at 34 (quoting Ex. 1004 ¶ 6; citing Ex. 2007 ¶ 58). According to Patent Owner, "[a] person of ordinary skill in the art would understand that a stator—especially one, such as the molded stator A, which is cooled by the cooling system—is a component of an electric motor." *Id.* (citing Ex. 2007 ¶ 58). Patent Owner contends molded stator A is an exterior motor component, not a cover, and must be a monolithic body to satisfy the claim limitation. *See id.* at 36 (citing Ex. 2007 ¶ 60).

We do not agree with Patent Owner's arguments because they are premised on an incorrect claim construction. Patent Owner's arguments are premised on construing the limitation as requiring the monolithic body to form a distinct cover for the device, even if the monolithic body already forms the exterior of the device. *See* PO Resp. 14–16. The claims, however, recite a device *comprising* the monolithic body. Taken to its logical conclusion, Patent Owner's construction would require a distinct monolithic body to cover a device that already includes a monolithic body. Such a construction is improper, and also is inconsistent with the embodiments disclosed in the '509 Patent Specification. *See e.g.*, Ex. 1001, 15:48–16:39, 19:1–18, Figs. 14, 15, 20, 21.

Patent Owner also argues that Umeda's support frame 16 is another external component of Umeda's motor that is not covered by a monolithic body, as neither casing cover 11 nor molded stator A covers the support frame 16. *See* PO Resp. 36–37 (reproducing Umeda Figure 1 with

Petitioner's annotations from Pet. 34; citing Ex. 2007 ¶ 61). We do not agree with Patent Owner's argument because, as pointed out by Petitioner, Patent Owner acknowledges that support frame 16 is part of the resin pump casing cover 11. *See* Reply 16–17 (reproducing Umeda Figure 1 with Patent Owner's annotations from PO Resp. 30); *see also* Ex. 1004 ¶ 17 (describing support frame 16 formed within intake port 12 of casing cover 11).

For the foregoing reasons, and based on the evidence before us, we find that Umeda teaches or suggests the monolithic body completely covers the exterior of the device except for the at least one fluid inlet and the at least one fluid outlet. *See* Ex. 1004, Fig. 1.

Summary

For all of the foregoing reasons, and after having analyzed the entirety of the record, we determine Petitioner has established by a preponderance of the evidence that claim 1 and claim 14 are unpatentable under 35 U.S.C. § 103(a) over Umeda, Raible, and Neal.

e. Analysis of Claims 2 and 15

Petitioner contends that Umeda teaches a "pump," as recited in dependent claims 2 and 15. *See* Pet. 29 (citing Ex. 1004 ¶¶ 18, 19; Ex. 1002 ¶ 96), 33 (citing Ex. 1004 ¶¶ 18, 19; Ex. 1002 ¶ 113). Patent Owner does not dispute Petitioner's contentions addressing claims 2 and 15. *See* PO Resp. 19–38.

We find that, based on Petitioner's cited evidence, Umeda, teaches or suggests a pump. *See* Ex. 1004 ¶¶ 18, 19. For these reasons in addition to the reasons discussed above addressing claims 1 and 14, and after having analyzed the entirety of the record, we determine Petitioner has established by a preponderance of the evidence that dependent claim 2 and dependent

claim 15 are unpatentable under 35 U.S.C. § 103(a) over Umeda, Raible, and Neal.

f. Analysis of Claim 7

Petitioner asserts that Umeda teaches or suggests "the heat transfer fluid pathway comprises a plurality of channels in the monolithic body," as recited in dependent claim 7, based on Umeda's alternative teachings including the provision of a plurality of apertures 24 as fluid channels in molded rotor B and the provision of apertures 29 formed in outer circumferential section of stator core 3 and protruding into circulation passage 26 as vertically-penetrating fluid channels. *See* Pet. 31 (citing Ex. 1004 ¶¶ 30, 34, Figs. 9, 11; Ex. 1002 ¶ 105). Patent Owner does not dispute Petitioner's contentions addressing claim 7. *See* PO Resp. 19–38.

Based on Petitioner's cited supporting evidence, we find that Umeda teaches or suggests the heat transfer fluid pathway comprises a plurality of channels in the monolithic device. *See* Ex. 1004, Figs. 9, 11. For these reasons in addition to the reasons discussed above addressing claim 1, and after having analyzed the entirety of the record, we determine Petitioner has established by a preponderance of the evidence that claim 7 is unpatentable under 35 U.S.C. § 103(a) over Umeda, Raible, and Neal.

g. Analysis of Claim 3

Independent claim 3 recites "a non-linear heat transfer fluid pathway provided by a separate conduit formed from thermoplastic which is substantially encapsulated in the monolithic body," which is not recited in independent claims 1 and 14. Petitioner asserts that Umeda's "heat transfer fluid pathway in the form of intake port 13, internal spaces C and D, and out discharge port 14 . . . is a separate conduit formed from thermoplastic and

substantially encapsulated in the molded components (molded stator A, molded rotor B, and casing cover 11)." *See* Pet. 30 (quoting Ex. 1004 ¶¶ 6, 9, 19; citing Ex. 1004, Fig. 1; Ex. 1002 ¶ 100). Petitioner also identifies Umeda's casing 12 comprising molded stator A of resin 5, and cover 11 as teaching the "monolithic body." *See id*. at 26. Petitioner further contends "[i]f the molded components are implemented as a monolithic body, as would be obvious to a [person of ordinary skill in the art] for the reasons discussed above, then the fluid pathway would be in the monolithic body." *Id*. at 30. Petitioner does not rely on Raible or Neal for teaching "a non-linear heat transfer fluid pathway provided by a separate conduit formed from thermoplastic which is substantially encapsulated in the monolithic body." *See id.* at 30–31.

In response, Patent Owner contends that the alleged fluid pathway in Umeda including inlet 13, spaces C and D, and outlet 14 is not separate from the body formed by resin 5 and casing cover 11. *See* Supp. PO Resp. 9; *id.* at 8–9 (reproducing Petitioner's annotated Figure 1 of Umeda from Pet. 25; citing Ex. 2013 ¶ 96). Patent Owner asserts that the alleged fluid pathway in Umeda is a gap between the stator body and the rotor body and is not a separately formed conduit. *See id.* at 9. According to Patent Owner, Umeda discloses that "[a]n intake port is formed in the center of the casing cover 11 and a discharge port 14 is formed on the joining surfaces of the casing cover and the mold stator A, extending radially outward from the pump casing 12." *Id.* (citing Ex. 1004 ¶ 16). According to Patent Owner, a person of ordinary skill in the art would have understood this disclosure to mean that the intake port 13 is the opening in the casing cover 11 and that the discharge port 14 is the gap in between the casing cover and the molded

stator A. *See id.* (citing Ex. 2013 ¶ 97); *see also id*. at 10–11 (additional arguments that Umeda's discharge port 14, intake port 13 and internal spaces C and D are merely gaps, spaces, or openings; citing Ex. 1004 ¶¶ 18, 19, 24, 28; Ex. 2013 ¶¶ 98–99). Patent Owner contends that there is nothing in Umeda's disclosure that indicates the inlet 13, spaces C and D, and outlet 14 are separate structures formed from thermoplastic and substantially encapsulated in the monolithic body. *See id.* (citing Ex. 2013 ¶ 97).

In reply, Petitioner contends that "[i]f the Board's construction of 'separate conduit' leaves open the possibility that the conduit is formed from the same material as the monolithic body as long as the conduit is mechanically or physically separate from the monolithic body along the flow path, then claim 3 is rendered unpatentable for all of the reasons set forth in the Petition." Reply 24–25 (citing Ex. 1002 ¶ 100; Ex. 2015, 15:19–18:10, 19:5–20:17); *see* Reply 1 (similar argument). According to Petitioner, "under this broader understanding of the Board's construction, discharge port 14 in Umeda is a separate conduit as claimed." *Id.* at 25 (citing Ex. 1002 ¶ 100, Ex. 2015, 15:19–18:10).

We are not persuaded that Umeda teaches the disputed claim limitation. As explained above in Section II.A.6., we determine that the broadest reasonable interpretation of "separate conduit" in light of the '509 Patent Specification is "conduit separate from the monolithic body." Petitioner does not explain sufficiently how Umeda's intake port 13, internal spaces C and D, and/or discharge port 14 formed from portions of cover 11, molded stator A of resin 5, and molded rotor B of resin 10 are separate from the monolithic body identified by Petitioner—molded stator A and cover 11,

and also are "substantially encapsulated" in the monolithic body—molded stator A and cover 11. *See* Pet. 30–31; Reply 25.

For the foregoing reasons, and after having analyzed the entirety of the record, we determine Petitioner has failed to establish by a preponderance of the evidence that claim 3, is unpatentable under 35 U.S.C. § 103(a) over Umeda, Raible, and Neal.

2. Unpatentability under 35 U.S.C. § 103(a) of Claims 1–3, 7, 14, and 15 over Umeda and Stephan

a. Overview of Stephan (Ex. 1011)

Stephan discloses an electrically operated element that can be used as a feed pump, restrictor, and/or shutoff element. *See* Ex. 1011 ¶ 1.

Figures 2 and 3 of Stephan are reproduced below.

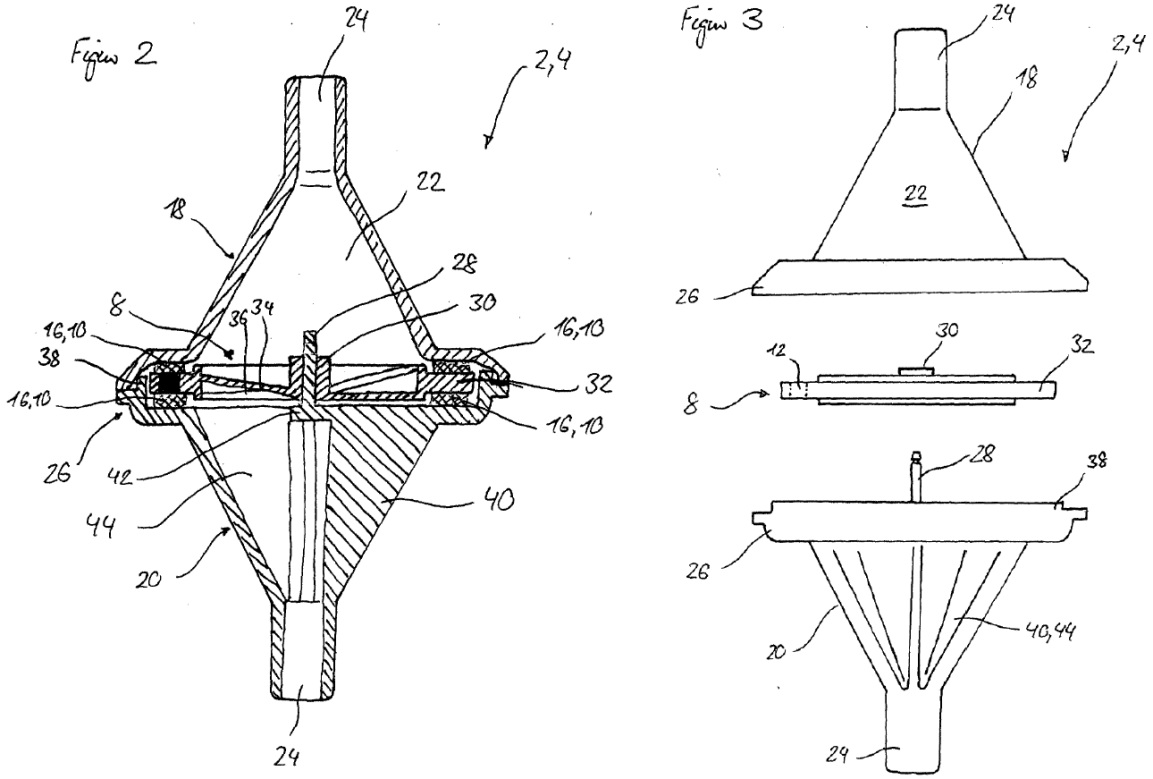

Figure 2 depicts a longitudinal section and Figure 3 depicts a schematic exploded representation of feed pump 2 or controllable feed-, flow control-,

and shutoff element 4. *See* Ex. 1011 ¶¶ 15–17, 21. Pump 2 or element 4 includes a housing consisting of a first housing half 18 and second housing half 20 having a funnel shaped design, line connections 24, shaft 28 of the second housing half 20, rotor 8 consisting of hub 30, vane blade sections 34, shutoff sections 36 and peripheral ring 32 with permanent magnets 12, and circuit carrier ring 16 provided with drive coils 10. *See id.* ¶¶ 21–25.

Figure 6 of Stephan is reproduced below.

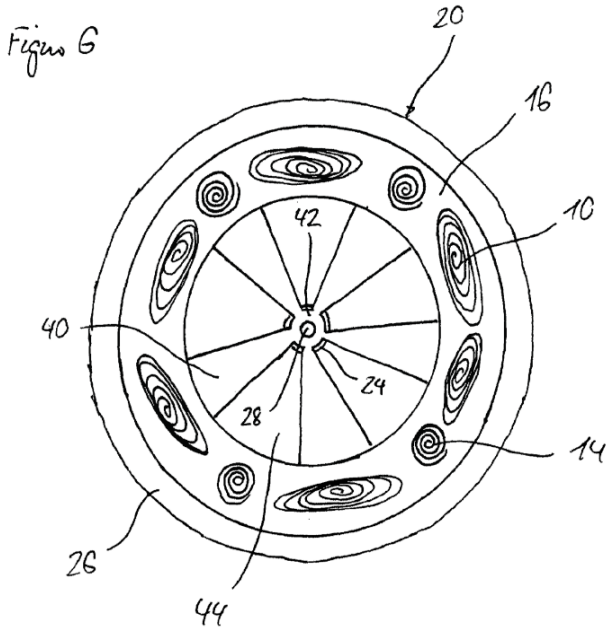

Figure 6 depicts a top view of schematic representations of housing half 20. *See* Ex. 1011 ¶ 19. Housing half 20 includes circuit carrier ring 16 including drive coils 10 and positioning coils 14, funnel segments 44 and shutoff segments 40. *See id.* ¶ 32. Funnel segments 44 have approximately the same contour as the corresponding funnel section 22 of the first housing half. *See id.* ¶ 35. Positioning coils 14 in cooperation with permanent magnets 12 facilitate a specific rotation angle positioning of the rotor 8 when drive coils 10 are off. *See id.* ¶ 32. When shutoff sections 36 of rotor 8 are arranged congruently above shutoff segment 40, flow can pass without

hindrance. *See id.* ¶ 33. When shutoff sections 36 of rotor 8 are arranged congruently above funnel segments 44, no flow can pass through. *See id.* ¶¶ 32–33. Intermediate positions are possible in which element 4 functions as a variable restrictor. *See id.* ¶ 33

Stephan discloses that rotor 8 and housing halves 18, 20 may be made of injection molded thermoplastic material, with circuit carrier rings 16 and drive coils 10 encapsulated therein. *See id.* ¶¶ 8, 38–39, 41. Housing halves 18 and 20 can be glued, welded, or riveted together. *See id.* ¶ 23.

b. Analysis of Claims 1–3, 7, 14, and 15

Independent claims 1, 3, and 14 each recite a "monolithic body of injection molded thermoplastic material." As acknowledged with respect to the asserted ground of unpatentability over Umeda, Raible, and Neal, discussed above in Section II.D.1., Petitioner states that Umeda "does not specifically disclose that the monolithic body is made of 'injection molded thermoplastic.'" Pet. 21–22; *see also id.* at 24 ("Umeda already discloses that the monolithic body may be formed from an acrylic resin, which *could* be a thermoplastic material suited for injection molding." (emphasis added)). As discussed previously in Section II.D.1., addressing the combined teachings of Umeda, Raible, and Neal, Petitioner establishes that a monolithic body of injection molded thermoplastic material would have been obvious in light of Neal's teachings. *See* Pet. 22–25.

For this ground of unpatentability based on Umeda and Stephan, however, Petitioner does not address how the applied prior art—Umeda and Stephan—would have rendered obvious this limitation. Petitioner simply states that "[a]s modified, both of these components would be formed of injection molded thermoplastic." *Id*. at 35. Petitioner fails to explain the

basis or reasoning for the modification. *See id.*; *see also id.* at 35–37 (asserting it would have been obvious in view of Stephan's teachings to weld together Umeda's molded stator A and casing cover 11 to form a unitary motor casing). Dr. Trumper also fails to address modifying Umeda's monolithic body to include injection molded thermoplastic, in light of Stephan's teachings. *See* Ex. 1002 ¶¶ 119–127. Accordingly, we denied institution of this ground of unpatentability. Inst. Dec. 23.

As a result of the Supreme Court's decision in *SAS Institute*, we modified our Institution Decision to include review of this ground of unpatentability. *SAS* Order 2. We also authorized Patent Owner to file a Supplemental Response to address this ground. Paper 23, 2–3. In its Supplemental Response, Patent Owner argues that the Board correctly determined that the Petition failed to cite sufficient evidence to show that it would have been obvious to modify Umeda based on Stephan to use injection molding. *See* Supp. PO Resp. 2. Patent Owner also presents additional arguments asserting that it would not have been obvious to modify Umeda in view of Stephan. *See id.* at 13–20.

In its Reply, Petitioner references its arguments addressing Umeda, Raible, and Neal, and argues that "it would have been obvious to modify Umeda to specifically use injection-molded thermoplastic." Reply 22. Petitioner also argues that a person of ordinary skill in the art would have been motivated to use injection-molded thermoplastic specifically, because Stephan "expressly discusses using injection-molded thermoplastic for its pump." *Id.* (citing Pet. 14; Ex. 1011 ¶¶ 8, 39; Ex. 1002 ¶ 125). Petitioner also identifies Dr. Trumper's deposition testimony that Stephan describes how "[t]he feed pump according to the invention is suitable as an economic

mass product," which, according to Petitioner, "provides an explicit motivation to use the same manufacturing technique disclosed therein—injection-molding thermoplastic—in other devices (like Umeda's) that are intended for use as pumps intended for mass production." *Id.* at 23 (citing Ex. 2015, 77:8–78:4; Ex. 1011 ¶ 42). Petitioner also contends that "it was well known to [persons of ordinary skill in the art] in the relevant timeframe to use injection molding for encapsulating pump motors." *Id.* (citing Ex. 1002 ¶ 79).

As stated in our Institution Decision, the Petition fails to explain how the "injection molded thermoplastic" limitation would have been rendered obvious by Umeda and Stephan. Petitioner did not argue in the Petition that it would have been obvious to modify the teaching of Umeda to utilize injection-molded thermoplastic material, and did not rely upon Stephan to support such a contention. Inst. Dec. 21–23; Pet. 34–36. Instead, Petitioner relied on Stephan in the Petition only for teaching welding together two portions of a housing. Pet. 35–37.

Petitioner's arguments (and evidence cited therein) made for the first time in the Reply relying on Stephan for teaching injection molding are improper.[10] "It is of the utmost importance that petitioners in the IPR

[10] Petitioner cites to page 14 of the Petition to support its assertion that Stephan expressly discusses using injection-molded thermoplastic for its pump. Reply 22–23. The cited portion of the Petition contains a "Summary of Stephan," which notes that Stephan's housing and rotor can be made of injection-molded synthetic plastic, including thermoplastics. Pet. 14. Neither the cited page of the Petition, nor the portion addressing the "injection molded thermoplastic" limitation, propose modifying Umeda in light of these teachings. *See* Pet. 14, 34–37.

proceedings adhere to the requirement that *the initial petition* identify 'with particularity' the 'evidence that supports the grounds for the challenge to each claim.'" *Intelligent Bio-Systems, Inc. v. Illumina Cambridge Ltd.*, 821 F.3d 1359, 1369 (Fed. Cir. 2016) (citing 35 U.S.C. § 312(a)(3)) (emphasis added); *see also Ariosa Diagnostics v. Verinata Health, Inc.*, 805 F.3d 1359, 1367 (Fed. Cir. 2015) ("We see no error in the Board's rejection of [petitioner's] reliance, in its Reply submissions, on previously unidentified portions of a prior-art reference to make a meaningfully distinct contention.").

For the foregoing reasons, and after having analyzed the entirety of the record, we determine Petitioner has failed to establish by a preponderance of the evidence that claims 1–3, 7, 14, and 15 are unpatentable under 35 U.S.C. § 103(a) over Umeda and Stephan.

3. Unpatentability under 35 U.S.C. § 103(a) of Claims 1–3, 14, and 15 over Bramm and Watterson

a. Overview of Bramm (Ex. 1008)

Bramm discloses an implantable blood pump with a magnetically suspended and rotated impeller. *See* Ex. 1008, Abstract, 1:14–20.

Figure 2 of Bramm is reproduced below.

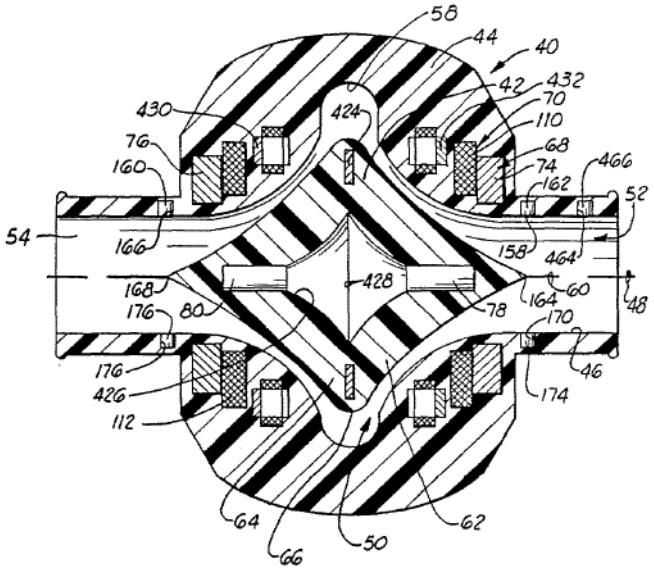

Figure 2 depicts a cross-section of a pump 40. *See* Ex. 1008, 5:51–56. Pump 40 includes plastic housing 44 including impellor chamber 50, plastic impellor 42, and inlet passages 52, 54, and an outlet passage (not shown). *See id*. at 7:35–46, 7:57–8:2. An outlet is formed in a central portion of housing 44 to extend tangentially from radially outermost portions of impellor chamber 50. *See id*. at 7:44–47 (not shown in Fig. 2). Impellor 42 is suspended and stabilized through forces exerted by housing magnets 74, 76 on impellor magnets 78, 80, as well as by electromagnet 70 and electromagnet control circuit. *See id*. at 7:66–8:2, 8:13–42, 31:47–68. Housing magnets 74, 76 include toroidal coils 110, 112. *See id*. at 11:64–12:33. "[T]he impellor (rotor) drive assembly for the pump 40 further comprises a stator . . . that includes two ferromagnetic pole pieces 430 and 432," around which two coils are wrapped. *Id.* at 27:1–16. In operation, Bramm discloses that fluid pressure is measured, converted into digital format, and used to determine the frequency to be supplied to coils to cause impellor 42 to rotate. *See id.* at 34:26–51.

b. Overview of Watterson (Ex. 1009)

Watterson discloses rotary blood pumps. *See* Ex. 1009, Abstract. The pump includes a housing, inlet, outlet, windings, and a magnetic impeller. *See id*. at 4:56–66, 8:14–19, 9:12–19. The pump housing can be fabricated in two parts to form a front part in the form of a housing body and a back part in the form of a housing cover with a smooth joint therebetween. *See id*. at 4:59–61, Fig. 1.

> In the preferred embodiment, the two housing components 3 and 4 are made by injection moulding from non-conducting plastic materials such as Lexan polycarbonate plastic or ceramics. The windings and yokes are encapsulated within the housing during fabrication moulding. In this way, the separation between the winding and the magnets is minimised, increasing the motor efficiency, and the housing is thick, increasing its mechanical stiffness. Alternatively, the windings can be positioned outside the housing, of thickness at least around 2 mm for sufficient stiffness.

Id. at 10:25–35.

c. Analysis of Claims 1 and 14

"A fluid-cooled electromagnetic field-functioning device" (claim 1) / "A fluid-cooled motor" (claim 14)

Petitioner asserts that Bramm teaches "[a] fluid-cooled electromagnetic field-functioning device," as recited in claim 1, or "[a] fluid-cooled motor," as recited in claim 14, based on Bramm's disclosure of electromagnetic field-functioning blood pump. *See* Pet. 44, 49–50 (citing generally Ex. 1008; Ex. 1008, 7:35–57). According to Petitioner, "[a]s would be recognized by a [person of ordinary skill in the art], the blood passing through the pump cools the pump by convection, carrying heat away from the pump. . . . Indeed, Bramm is particularly directed to reducing the

amount of heat discharged into the blood by keeping the device cool." *Id*. at 44, 50 (citing Ex. 1002 ¶¶ 164–165; Ex. 1008, 2:62–66, 3:32–45).

Patent Owner contends that Petitioner's assertion that blood passing through Bramm's pump cools the pump is undermined by Petitioner's assertion that "Bramm is particularly directed to reducing the amount of heat discharged into the blood by keeping the device cool." PO Resp. 38–39 (quoting Pet. 44; citing Ex. 2007 ¶ 66). Basing its arguments on it proposed construction for "fluid-cooled," Patent Owner contends "a person of ordinary skill in the art would understand that blood cannot be used for the purpose of cooling the pump while also minimizing the amount of heat discharged into the blood," and "would understand that if blood were used for the purpose of cooling the pump, the blood would necessarily suffer excessive heat discharge." *Id.* at 39 (citing Ex. 2007 ¶ 66). Patent Owner contends that Bramm emphasizes the problems of heating blood. *See id.* (quoting Ex. 1008, 2:14–22; citing Ex. 2007 ¶ 67). Patent Owner asserts that Bramm solved the serious problem of overheating the blood by designing the pump so that it would not discharge too much heat into the blood. *See id.* at 39–40 (quoting Ex. 1008, 2:62–66; citing Ex. 2007 ¶ 67).

Patent Owner asserts that the Petition and Dr. Trumper rely on *de minimis* heating of blood that may occur during operation of Bramm's pump. *See* PO Resp. 40 (citing Pet. 44; Ex. 1002 ¶ 164); *see also* Tr. 35–41 (similar oral arguments). According to Patent Owner, Petitioner is "asking the Board to adopt an ***unreasonable*** misconstruction that would write the 'fluid-cooled' limitation out of the claims to artificially distort the claims to cover any device that pumps a fluid with minor and purely incidental cooling properties." *Id.* at 40–41 (citing Ex. 2007 ¶ 69).

In reply, Petitioner asserts that "[e]ven if 'fluid-cooled' in the preambles were given patentable weight (which it should not), Bramm and Watterson still render the challenged claims unpatentable because Bramm does, in fact, disclose a fluid-cooled motor." Reply 21. Petitioner contends that a person of ordinary skill in the art would have recognized that blood passing through the pump cools the motor by convection, carrying heat away from the motor. *See id.* (citing Ex. 1002 ¶ 164). According to Petitioner, "it is implicit in Bramm that some heat is still inevitably transferred from the motor to the blood, consistent with Bramm's goal of minimizing, not eliminating, such heat transfer." *Id.* at 21–22. Petitioner asserts that Bramm's motor is fluid-cooled to some non-zero extent, which Patent Owner does not deny. *See id.* at 22; *see also* Tr. 37:19–40:14 (agreeing that *de minimis* cooling occurs). Petitioner argues that, even if the preambles were found limiting, Patent Owner's argument should be rejected because the preamble only recites "fluid-cooled" and does not recite "intentionally fluid-cooled." *See id.*

As discussed above in Section II.A.2., we do not consider the preamble recitation of "fluid-cooled" to impart any additional structural limitations on the "device" or "motor." Also as discussed above in Section II.A.2., Patent Owner's arguments that "fluid-cooled" requires more than minor and incidental cooling, or more than *de minimis* cooling, do not impart any additional structural limitations to the "device" or "motor." As detailed in the analysis that follows, Bramm and Watterson teach or suggest each of the structural limitations for the recited "fluid-cooled . . . device" and "fluid-cooled motor." When the structural limitations are all found in the prior art, the absence of a disclosure in the prior art relating to function

or intended use does not defeat a finding of unpatentability. "It is well settled that the recitation of a new intended use for an old product does not make a claim to that old product patentable." *In re Schreiber*, 128 F.3d 1473, 1477 (Fed. Cir. 1997) ("structure will be used to dispense popcorn does not have patentable weight if the structure is already known, regardless of whether it has ever been used in any way in connection with popcorn."). Apparatus claims must be distinguished from the prior art in terms of the structure rather than function. *Id.* at 1477–78. For the foregoing reasons, and based on the evidence of record, we find that Bramm teaches or suggests a fluid-cooled electromagnetic field-functioning device, and a fluid-cooled motor.

"at least one electrical conductor"(claims 1 and 14)

Petitioner contends that Umdea teaches "at least one electrical conductor" based on Bramm's description of coils 110, 112 of the stator. *See* Pet. 44 (citing Ex. 1008, 12:6–34; Ex. 1002 ¶ 166). Patent Owner does not dispute Petitioner's contentions addressing the at least one electrical conductor. *See* PO Resp. 38–43. We find that, based on Petitioner's cited supporting evidence, Bramm's coils 110, 112 teach or suggest at least one electrical conductor. *See* 1008, 12:6–34; Fig. 2.

"monolithic body of injection molded thermoplastic material" (claims 1 and 14)

Petitioner contends that Bramm teaches housing 44 is constructed of plastic, but acknowledges that Bramm does not explicitly state that it is a thermoplastic, or that encapsulation occurs via injection molding. *See* Pet. 45 (citing Ex. 1008, 7:57–58). Petitioner assets that, "Watterson teaches electromagnetic heart pumps where the conductor is encapsulated in a

thermoplastic via injection molding." *See id*. at 45–46 (citing Ex. 1009, 10:25–29; Ex. 1002 ¶ 171).

Petitioner contends that it would have been obvious to one with ordinary skill in the art to use a thermoplastic like Lexan in Bramm's pump. *See id*. at 45–46. More specifically, Petitioner asserts: (1) Watterson teaches making two housing components by injection molding from plastic materials such as Lexan polycarbonate plastics, where the windings are encapsulated within the housing during fabrication molding as a preferred embodiment; (2) a person of ordinary skill in the art would have known that Lexan polycarbonate is a commercially-available thermoplastic; (3) a person of ordinary skill in the art would have recognized that a thermoplastic would be well-suited for use in these environments, for example by having high heat conductivity allowing heat to be easily transferred away from the motor; (4) injection molding was a well-known, common technique for manufacturing items using thermoplastics; and (5) a person of ordinary skill in the art would have had a reasonable expectation of successfully using injection molding with thermoplastic when implementing Bramm's pump. *See id*. at 46 (citing Ex. 1009, 10:25–29; Ex. 1002 ¶¶ 171–172). Patent Owner does not dispute Petitioner's contentions addressing this limitation. *See* PO Resp. 38–43.

On the foregoing bases, we find the combination of Bramm and Watterson teaches or suggests a monolithic body of injection molded thermoplastic. *See* Ex. 1008, 7:57–58; Ex. 1009, 10:25–29. We also determine that Petitioner has provided sufficient articulated reasoning with rational underpinning to establish that a person of ordinary skill in the art would have modified the teachings of Bramm, in light of Watterson's

teachings, to use a thermoplastic like Lexan in Bramm's pump, because thermoplastics are well-suited for use in Bramm's environment, and injection molding was a well-known common technique for manufacturing items using thermoplastics. *See KSR*, 550 U.S. at 418 (quoting *Kahn*, 441 F.3d at 988). Based on the evidence before us, we determine that the combined teachings of Bramm and Watterson would have rendered obvious a monolithic body of injection molded thermoplastic.

"monolithic body . . . substantially encapsulating the at least one conductor" (claims 1 and 14) and "the monolithic body . . . substantially encapsulates a stator" (claim 14)

Petitioner asserts that Bramm teaches "a monolithic body . . . substantially encapsulating the at least one conductor," as recited in claims 1 and 14, and "the monolithic body . . . substantially encapsulates a stator of the motor," as recited in claim 14, based on Bramm's teaching of coils 110, 112 of stator and ferromagnetic pole pieces 430 and 432 are encapsulated by plastic housing 44. *See id.* at 45 (reproducing Ex. 1008, Fig. 2 with annotations, citing Ex. 1008, 7:57–58, 12:65–13:2 Fig. 1; Ex. 1002 ¶ 167); *see id*. at 50 (citing Ex. 1008, 12:65–13:2, 27:1–5, Figs. 2, 21 Ex. 1002 ¶ 191). Consistent with the construction for "substantially encapsulating," addressed in Section II.A.5., Petitioner further asserts that a person of ordinary skill in the art would understand that coils 110, 112, and ferromagnetic pole pieces 430 and 432 are rigidly fixed in the housing as a single component with respect to harmonic oscillation vibration. *See id*. at 45 (citing Ex. 1002 ¶¶ 168–170), 50–51 (citing Ex. 1002 ¶ 192). Patent Owner does not dispute Petitioner's contentions addressing this limitation. *See* PO Resp. 38–43.

We find that, based on the Petitioner's cited supporting evidence, Bramm teaches or suggests "a monolithic body . . . substantially encapsulating the at least one conductor," and "the monolithic body . . . substantially encapsulates a stator of the motor." *See* Ex. 1008, Fig. 2.

"non-linear heat transfer fluid pathway in the monolithic body, with at least one fluid inlet and at least one fluid outlet to said pathway to allow for passage of heat transfer fluid through the pathway" (claims 1 and 14)

Petitioner also contends that Bramm teaches "a non-linear heat transfer fluid pathway in the monolithic body with at least one fluid inlet and at least one fluid outlet," as recited in claims 1 and 14, based on Bramm's teaching of bore 46 that widens into impeller chamber 50 that is embedded in and integral with housing 44, fluid inlets 52, 54, and fluid outlet 56 (shown in Fig. 3). *See* Pet. 46–47 (citing Ex. 1008, Figs. 1, 2, 2:55–57, 7:35–66; Ex. 1002 ¶¶ 174–175). According to Petitioner, bore 46 that widens into impeller chamber 50 is "non-linear" as defined in the '509 Patent because its irregular shape could not be formed by a simple core pin in an injection mold tool. *See id*. at 47 (citing Ex. 1001, 18:15–18; Ex. 1002 ¶ 174). Petitioner contends that blood is the heat transfer fluid and travels from inlet passages 52, 54 along bore 46 through impeller chamber 50 and then out outlet passage 56. *See id*. (citing Ex. 1008, 2:55–57, 7:47–66). Patent Owner does not dispute Petitioner's assertions addressing this limitation. *See* PO Resp. 38–43.

Based on the Petitioner's cited supporting evidence, we find that Bramm teaches or suggests a non-linear heat transfer fluid pathway in the monolithic body with at least one fluid inlet and at least one fluid outlet. *See* Ex. 1008, Figs. 2–3.

"monolithic body completely covers the exterior of the device except for the at least one fluid inlet and the at least one fluid outlet"(claim 1)

Petitioner contends that Bramm discloses "the monolithic body completely covers the exterior of the device except for the at least one fluid inlet and the at least one fluid outlet," as recited in claim 1, based on Bramm's disclosure in Figures 1 and 2 that housing 44 completely covers the exterior of the device except for the fluid inlet and outlet. *See id.* at 47–48 (citing Ex. 1008, Figs. 1, 2; Ex. 1002 ¶ 177). Patent Owner does not dispute Petitioner's arguments addressing this limitation. *See* PO Resp. 38–43.

We find that, based on the Petitioner's cited supporting evidence, Bramm teaches or suggests the monolithic body completely covers the exterior of the device except for the at least one fluid inlet and the at least one fluid outlet. *See* Ex. 1008, Figs. 1, 2.

Summary

For the foregoing reasons, and after having analyzed the entirety of the record, we determine Petitioner has established by a preponderance of the evidence that claim 1 and claim 14 are unpatentable under 35 U.S.C. § 103(a) over Bramm and Watterson.

d. Analysis of Claims 2 and 15

Petitioner asserts that Bramm teaches a "pump," as recited in dependent claims 2 and 15. *See* Pet. 48 (citing Ex. 1008, generally; Ex. 1002 ¶ 179), *id*. at 51 (citing Ex. 1008, generally; Ex. 1002 ¶ 194). Patent Owner does not dispute Petitioner's contentions addressing this limitation. *See* PO Resp. 38–43.

Based on Petitioner's cited evidence, we find that Bramm teaches or suggests a pump. *See* Ex. 1008, Abstract. For these reasons in addition to the reasons discussed above addressing claims 1 and 14, and after having analyzed the entirety of the record, we determine Petitioner has established by a preponderance of the evidence that dependent claim 2 and dependent claim 15 are unpatentable under 35 U.S.C. § 103(a) over Bramm and Watterson.

e. Analysis of Claim 3

Independent claim 3 recites "a non-linear heat transfer fluid pathway provided by a separate conduit formed from thermoplastic which is substantially encapsulated in the monolithic body," which is not recited in independent claims 1 and 14. Petitioner asserts that "Bramm teaches a fluid pathway in the form of bore 46 that widens into impeller chamber 50 that is a separate conduit formed from housing 44." *See* Pet. 48 (citing Ex. 1008, Figs. 1, 2, 7:35–47; Ex. 1002 ¶ 183. Petitioner also identifies Bramm's housing 44 as teaching the claimed monolithic body. *See id*. at 45 (citing Ex. 1008, Fig. 1; Ex. 1002 ¶ 167), 48. Petitioner does not rely on Watterson for teaching this limitation. *See id.* at 48–49.

In response, Patent Owner contends that Petitioner's alleged fluid pathway is not separate from the alleged monolithic body. *See* Supp. PO Resp. 20–21 (reproducing Petitioner's annotated Figure 2 of Bramm from Pet. 45). Referring to Petitioner's annotated Figure 2 of Bramm, Patent Owner asserts that Petitioner's alleged fluid pathway is merely the opening formed by the inner walls of housing 44. *See* Supp. PO Resp. 21 (citing Ex. 2013 ¶ 111). Patent Owner cites Bramm's disclosure that "[t]he pump 40 is comprised of a housing 44 having a bore 46 formed therethrough

about an impellor support axis 48 and central portions of the bore 46 are enlarged to form an impellor chamber 50." *Id.* (quoting Ex. 1008, 7:35–38). According to Patent Owner, "the description of the bore 46 and impellor chamber 50 in the specification of Bramm confirms that the bore 46 and impellor chamber 50 are merely the opening by the inner walls of the housing 44." *Id.* (citing Ex. 2013 ¶ 112). Patent Owner contends that Bramm does not teach that bore 46 or impellor chamber 50 is a conduit that is formed of thermoplastic and is separate from and encapsulated in the alleged monolithic body. *See id.* at 22 (citing Ex. 2013 ¶ 113).

In reply, Petitioner contends that "[i]f the Board's construction of "separate conduit" leaves open the possibility that the conduit is formed from the same material as the monolithic body as long as the conduit is mechanically or physically separate from the monolithic body along the flow path, then claim 3 is rendered unpatentable for all of the reasons set forth in the Petition." Reply 24–25 (citing Ex. 1002 ¶ 100; Ex. 2015, 15:19–18:10, 19:5–20:17); *see* Reply 1 (similar argument). According to Petitioner, "the pipe-like structure on the right-hand side of Bramm's Fig. 2, and the symmetric structure on the left-hand side near numeral 54, are separate conduits that are disclosed in Bramm." *Id.* at 25 (citing Ex. 2015, 19:5–20:17).

We are not persuaded that Bramm teaches the disputed claim limitation. As explained above in Section II.A.6., we determine that the broadest reasonable interpretation of "separate conduit" in light of the '509 Patent Specification is a "conduit separate from the monolithic body." Petitioner does not explain sufficiently how Bramm's first inlet passage 52, second inlet passage 54, and/or bore 46 that widens into impeller

chamber 50, all of which are formed from housing 44, teaches or suggests a conduit separate from the monolithic body identified by Petitioner—housing 44, and also "substantially encapsulated" in the monolithic body—housing 44. *See* Pet. 48–49; Reply 25. For the foregoing reasons, and after having analyzed the entirety of the record, we determine Petitioner has failed to establish by a preponderance of the evidence that claim 3 is unpatentable under 35 U.S.C. § 103(a) over Bramm and Watterson.

E. Patent Owner's Motion to Strike Petitioner's Reply

Patent Owner filed a Motion to Strike Petitioner's Reply for allegedly presenting at least one new argument that Petitioner could have presented earlier. *See* Mot. Str. Petitioner filed an Opposition. *See* Opp. Mot. Str. Patent Owner argues the Trial Practice Guide Update (August 2018) sets forth "a workable and clear-cut legal standard: Petitioner may not submit new evidence or argument in reply that it could have presented earlier, e.g. to make out a prima facie case of unpatentability." Mot. Str. 2 (citing Office Trial Practice Guide Update (August 2018) ("TPG Update"), 14). Patent Owner elaborates, arguing "[t]his standard may allow new reply evidence or argument when the [Response] first raises issues for which Patent Owner bears the burden of proof or that are otherwise unforeseeable, such as swear-behind, secondary consideration[s], teaching away, or unexpected claim construction arguments." *Id.* at 2–3. According to Patent Owner, "forseeable patentability arguments should not open the door for Petitioner[] to submit new evidence or arguments that Petitioner[] easily could have included in the Petition." *Id.* at 3 (citing 35 U.S.C. §§ 312(a)(3), 316(e)).

Patent Owner argues the Petition does not include any argument that the preamble claim term "fluid-cooled" is not a claim limitation, yet the

Reply does include that argument. *See* Mot. Str. 3 (citing Pet. 17–19). Patent Owner also asserts the Petition treats the preamble term "fluid-cooled" as a claim limitation, but the Reply does not. *See id.* (quoting Pet. 20, 40; citing Pet. 32, 42, 50; Reply 19–21). According to Patent Owner, Petitioner's Reply argument is impermissible because Petitioner easily could have made the argument in the Petition. *See id.* at 3–4 (citing TPG Update 14). Patent Owner contends the Petition is statutorily required to include any claim construction proposal and the evidence upon which it relies. *See id.* at 4 (quoting 35 U.S.C. § 312(a)(4); 37 C.F.R. § 42.104(b)(3)). According to Patent Owner, Petitioner's argument that "'fluid-cooled' is not limiting is not responsive to a new issue first raised in the [Response] . . . . if Petitioner[] relied on a particular claim construction, that claim construction was a necessary part of the Petition. And [Patent Owner]'s argument that 'fluid-cooled' is a claim limitation is not unusual or unforeseeable." *Id.* at 4.

Petitioner opposes Patent Owner's Motion, arguing that Patent Owner "appears to advance a literal reading of the 'could have presented earlier' language in the [TPG Update]." Opp. Mot. Str. 1 (citing TPG Update 14). Patent Owner argues that Patent Owner's arguments misconstrue the applicable Federal Circuit case law, and cannot be the correct standard because it would cover all responsive arguments. *See id.* at 1–2 (citing *Idemitsu Kosan Co. v. SFC Co.*, 870 F.3d 1376, 1381 (Fed. Cir. 2017); *Genzyme Therapeutic Prod. Ltd. P'ship v. Biomarin Pharm. Inc.*, 825 F.3d 1360, 1366 (Fed. Cir. 2016); *Belden Inc. v. Berk-Tek LLC*, 805 F.3d 1064, 1078 n.4, 1080 (Fed. Cir. 2015)); *see also id.* at 1–2 (quoting *Belden v. Berk-Tek*, 805 F.3d at 1079). Petitioner emphasizes that the TPG Update states

that striking the entirety or a portion of a party's brief is an exceptional remedy that the Board expects will be granted rarely. *See id*. at 2 (quoting TPG Update 18). Petitioner further argues the Federal Circuit recently noted that the petitioner should have an opportunity to respond to issues raised after the petition was filed. *See id.* (citing *Ericsson Inc. v. Intellectual Ventures I LLC*, 901 F.3d 1374, 1380 (Fed. Cir. Aug. 27, 2018)).

As to Patent Owner's specific allegations of impermissible new arguments, Petitioner asserts that it did not take a position on whether the preambles were limiting in the Petition because there was no reason to do so, and merely noted that the prior art motors are literally fluid-cooled to show that, to the extent the Board found the preambles limiting, the prior art satisfied the preambles. *See* Opp. Mot. Str. 4. According to Petitioner, when filing the Petition, Petitioner had no reason to expect that Patent Owner would later propose a construction for the preamble's "fluid-cooled motor" requiring the term to mean a motor that uses fluid for the purpose of cooling the motor. *See id.* (citing PO Resp. 11). Likewise, Petitioner argues Patent Owner's claim construction argument inserting a purpose requirement into the preamble, and subsequent reliance on that purpose to try to distinguish the claims from the prior art, was not foreseeable such that Petitioner would have had an obligation to address those arguments in the Petition. *See id*. According to Petitioner, once Patent Owner raised this argument in it Response, Petitioner properly responded to it in their Reply. *See id*. at 4–5.

"[T]he Board is capable of identifying new issues or belatedly presented evidence when weighing the evidence at the close of trial, and disregarding any new issues or belatedly presented evidence that exceeds the

proper scope of reply." TPG Update 17. We have reviewed Petitioner's Reply and determine that Petitioner's Reply is directly responsive to Patent Owner's arguments raised in its Response. Patent Owner proposed a construction of "fluid-cooled" and argued that Bramm did not disclose or teach the preamble as so construed. *See* PO Resp. 7–12, 38–42. Petitioner merely responded to Patent Owner's arguments, as it was entitled to do. *See Idemetsu*, 870 F.3d at 1381. Patent Owner also was afforded the opportunity to address Petitioner's Reply arguments in its Sur-Reply. Moreover, "striking the entirety or a portion of a party's brief is an exceptional remedy that the Board expects will be granted rarely." TPG Update 18. In view of the foregoing, Patent Owner's Motion to Strike Petitioner's Reply is *denied*.

III. CONCLUSION

For the foregoing reasons, we determine Petitioner has demonstrated by a preponderance of the evidence that claims 1, 2, 7, and 14, and 15 of the '509 Patent are unpatentable on some of the asserted grounds of unpatentability. We also determine Petitioner has not demonstrated by a preponderance of the evidence that claim 3 is unpatentable.

IV. ORDER

Accordingly, it is

ORDERED that claims 1, 2, 7, 14, and 15 are unpatentable under 35 U.S.C. § 103(a) over Umeda, Raible, and Neal;

OREDERED that claims 1, 2, 14, and 15 are unpatentable under 35 U.S.C. § 103(a) over Bramm and Watterson;

ORDERED that claims 1–3, 7, 14, and 15 are not unpatentable under 35 U.S.C. § 103(a) over Umeda and Stephan;

ORDERED that claim 3 is not unpatentable under 35 U.S.C. § 103(a) over Umeda, Raible, and Neal;

ORDERED that claim 3 is not unpatentable under 35 U.S.C. § 103(a) over Bramm and Watterson;

FURTHER ORDERED that Patent Owner's Motion to Strike Petitioner's Reply is *denied*; and

FURTHER ORDERED that, because this is a Final Written Decision, parties to the proceeding seeking judicial review of the decision must comply with the notice and service requirements of 37 C.F.R. § 90.2.

PETITIONER:

Robert Mattson
cpdocketmattson@oblon.com

Joshua Goldberg
joshua.goldberg@finnegan.com

Thomas Winland
tom.winland@finnegan.com

Alyssa Holtslander
alyssa.holtslander@finnegan.com

James Barney
james.barney@finnegan.com

John Kern
cpdocketkern@oblon.com

Lisa Mandrusiak
cpdocketmandrusiak@oblon.com

PATENT OWNER:

John R. King
2jrk@knobbe.com

Ted M. Cannon
2tmc@knobbe.com

Bridget Smith
2bzs@knobbe.com

Tim Seeley
tims@intven.com

James Hietala
jhietala@intven.com

CERTIFICATE OF SERVICE

I hereby certify that the original of this **PATENT OWNER'S NOTICE OF APPEAL TO THE U.S. COURT OF APPEALS FOR THE FEDERAL CIRCUIT** was filed via U.S.P.S. Priority Mail Express on April 24, 2019 with the Director of the United States Patent and Trademark Office at the address below:

Office of the General Counsel
Director of the U.S. Patent & Trademark Office
United States Patent and Trademark Office
P.O. Box 1450
Alexandria, VA 22313-1450

Priority Mail Express Tracking No.: EF204270281US

A copy of this Notice of Cross Appeal is being filed and served on April 24, 2019 as follows:

To the USPTO Patent Trial and Appeal Board:
Patent Trial and Appeal Board
Madison Building East
600 Dulany Street
Alexandria, VA 22313

(*via PTAB E2E, as authorized by the Board*)

To the U.S. Court of Appeals for the Federal Circuit:
Clerk of Court
U.S. Court of Appeals for the Federal Circuit
717 Madison Place, N.W.
Washington, DC 20439

(*via CM/ECF – with filing fee*)

To Counsel for Petitioners:

Counsel for Toyota
Joshua L. Goldberg
joshua.goldberg@finnegan.com
James R. Barney
james.barney@finnegan.com
Thomas W. Winland
tom.winland@finnegan.com
Toyota-IV-IPR@finnegan.com

Counsel for Aisin Seiki
Robert C. Mattson
cpdocketmattson@oblon.com
John S. Kern
cpdocketkern@oblon.com
Lisa M. Mandrusiak
cpdocketmandrusiak@oblon.com
Alex Englehart
cpdocketenglehart@oblon.com
Aisin_IV_IPR@oblon.com

Counsel for American Honda
John Caracappa
jcaracap@steptoe.com
James R. Nuttall
jnuttall@steptoe.com
Li Guo
lguo@steptoe.com
SJHondaIPR@Steptoe.com

Dated: April 24, 2019

By: /Ted M. Cannon/
John R. King (Reg. No. 34,362)
Ted M. Cannon (Reg. No. 55,036)
Bridget A. Smith (Reg. No. 63,574)
Customer No. 20,995
Attorneys for Patent Owner

30357919