Filed: June 12, 2019

Filed on behalf of PalTalk Holdings, Inc.
By: Douglas R. Wilson
doug.wilson@armondwilson.com
Michelle E. Armond
michelle.armond@armondwilson.com
ARMOND WILSON LLP
9442 Capital of Texas Hwy North,
Plaza 1, Suite 500
Austin, Texas 78759
Tel: (512) 343-3622
Fax: (512) 345-2924

UNITED STATES PATENT AND TRADEMARK OFFICE

BEFORE THE PATENT TRIAL AND APPEAL BOARD

RIOT GAMES, INC. and
VALVE CORP.,
Petitioners,

v.

PALTALK HOLDINGS, INC.,
Patent Owner.

Case IPR2018-00131[1]
Patents 6,226,686 & 6,226,686 C1

PATENT OWNER'S NOTICE OF APPEAL TO THE U.S. COURT OF APPEALS FOR THE FEDERAL CIRCUIT

---

[1] Case IPR2018-01238 has been joined with this proceeding.

Pursuant to 28 U.S.C. § 1295(a)(4)(A), 35 U.S.C. §§ 141(c), 142, and 319, 37 C.F.R. §§ 90.2(a) and 90.3, and Rule 4(a) of the Federal Rules of Appellate Procedure, Patent Owner PalTalk Holdings, Inc. ("PalTalk") hereby appeals to the United States Court of Appeals for the Federal Circuit from the Final Written Decision (Paper 37) entered on May 14, 2019 (attached hereto as Attachment A), and from all underlying orders, decisions, rulings, and opinions that are adverse to PalTalk related thereto and included therein.

In particular, PalTalk identifies the following issues on appeal: the determination that Claims 1-4, 7-21, 28-35, 39, 40, 47-54, 56, 57, and 64-70 of U.S. Patent Nos. 6,226,686 and 6,226,686 C1 are unpatentable under 35 U.S.C. § 103, any finding or determination supporting or relating to these issues; and all other procedural and substantive issues decided adversely to PalTalk in any order, decision, ruling, or opinion by the Board in both IPR2018-00131 and IPR2018-01238.

PalTalk is concurrently providing true and correct copies of this Notice of Appeal, along with the required fees, with the Director of the United States Patent and Trademark Office and the Clerk of the United States Court of Appeals for the Federal Circuit.

Riot Games, Inc. v. PalTalk Holdings, Inc.
IPR2018-00131, IPR2018-01238

ARMOND WILSON LLP

June 12, 2019

/Douglas R. Wilson/
Douglas R. Wilson (Reg. No. 54,542)

Counsel for Patent Owner
PALTALK HOLDINGS, INC.

ATTACHMENT A

Trials@uspto.gov
Tel: 571-272-7822

Paper 37
Entered: May 14, 2019

UNITED STATES PATENT AND TRADEMARK OFFICE

BEFORE THE PATENT TRIAL AND APPEAL BOARD

RIOT GAMES, INC.,
Petitioner,

v.

PALTALK HOLDINGS, INC.,
Patent Owner.

Case IPR2018-00131[1]
Patent 6,226,686 & 6,226,686 C1[2]

Before THU A. DANG, KARL D. EASTHOM, and NEIL T. POWELL, *Administrative Patent Judges.*

DANG, *Administrative Patent Judge*.

FINAL WRITTEN DECISION
Inter Partes Review
35 U.S.C. § 318(a) and 37 C.F.R. § 42.73

---

[1] The panel joined Petitioner Valve Corp. and Case IPR2018-01238 to the instant proceeding. *See* Paper 34.

[2] The Petition challenges original claims and claims issued pursuant to an ex parte reexamination.

I. INTRODUCTION

A. Background

Riot Games Inc. ("Petitioner") filed a Petition requesting an *inter partes* review of claims 1–4, 7–21, 28–35, 39, 40, 47–54, 56, 57, and 64–70 of U.S. Patent No. 6,226,686 (Ex. 1002, "the '686 patent"). Paper 1 ("Pet."). PalTalk Holdings, Inc. ("Patent Owner") filed a Preliminary Response. Paper 6 ("Prelim. Resp."). Pursuant to our prior authorization (Paper 8, "Order"), Petitioner filed a Reply to the Patent Owner Preliminary Response (Paper 9, "Reply to Prelim. Resp.") as to the issue of Patent Owner's claim constructions, and Patent Owner filed a Preliminary Sur-Reply (Paper 10, "Prelim. Sur-Reply").

We instituted trial to determine whether claims 1–4, 7–21, 28–35, 39, 40, 47–54, 56, 57, and 64–70 are unpatentable under 35 U.S.C. § 103 based on the combination of Aldred and RFC 1692 either alone or in combination with RFC 1459. *See* Paper 11 ("Institution Decision" or "Inst. Dec."). After institution of trial, Patent Owner filed a Request for Rehearing. Paper 14 ("Reh'g. Req."). We denied Patent Owner's Request for Rehearing. Paper 18 ("Rehearing Decision" or "Reh'g Dec.").

Patent Owner then filed a Response. Paper 22 ("PO Resp."). Petitioner filed a Reply to Patent Owner's Response. Paper 26 ("Pet. Reply"). Pursuant to our prior authorization (Paper 27, "Order"), Patent Owner filed a Sur-Reply to Petitioner's Reply (Paper 31, "PO Sur-Reply").

Oral argument was conducted on February 13, 2019. A transcript of that argument is entered in the record. *See* Paper 36 ("Tr.").

We have jurisdiction under 35 U.S.C. § 6. This decision is a Final Written Decision under 35 U.S.C. § 318(a) as to the patentability of

claims 1–4, 7–21, 28–35, 39, 40, 47–54, 56, 57, and 64–70 of the ’686 patent. For the reasons discussed below, we hold that Petitioner has demonstrated by a preponderance of the evidence that claims 1–4, 7–21, 28–35, 39, 40, 47–54, 56, 57, and 64–70 of the ’686 patent are unpatentable under 35 U.S.C. § 103(a).

B. Related Proceedings

Petitioner states that the ’686 patent is related to the following U.S. Patents: 5,822,523 (“the ’523 patent”) and 6,018,766. Pet. 1. According to Petitioner, *ex partes* reexamination No. 90/011,036 (Ex. 1006) involved a reexamination of the ’686 patent. Pet. 1.

A concurrent request for *inter partes* review, IPR2018-00132, challenges claims of the ’686 patent. Pet. 1. Two other concurrent requests for *inter partes* review, IPR2018-00129 and IPR2018-00130, challenge claims of the ’523 patent. Pet. 1.

Petitioner also states that the following cases involve the ’523 and ’686 patents: *PalTalk Holdings, Inc. v. Valve Corp.*, No. 16-cv-1239-JFB-SRF (D. Del.) (filed Dec. 16, 2016); *PalTalk Holdings, Inc. v. Riot Games, Inc.*, No. 1:16-cv-1240-JFB-SRF (D. Del.) (filed Dec. 16, 2016); *PalTalk Holdings, Inc. v. Sony Computer Entertainment America, Inc. et al.*, No. 2:09-cv-00274-DF-CE (E.D. Tex.) (filed Sept. 14, 2009); *PalTalk Holdings, Inc. v. Microsoft Corp.*, No, 2:06-cv-00367-DF (E.D. Tex.) (filed Sept. 12, 2006); and *Mpath Interactive v. Lipstream Networks, Inc., et al.*, No. 3:99-cv-04506-WHA (N.D. Cal.) (filed Oct. 7, 1999). Pet. 1–2.

C. The ’686 Patent

The ’686 patent issued on May 1, 2001, from an application filed September 28, 1999, and claims priority to parent application

No. 08/896,797, filed on July 18, 1997, now US 6,018,766, which in turn is a continuation of application No. 08/595,323, filed on February 1, 1996, now US 5,822,523. Ex. 1002, [45], [22], and [63].

The ’686 patent, titled “Server-Group Messaging System for Interactive Applications,” describes a “method for deploying interactive applications over a network containing host computers and group messaging servers.” *Id.* at [54], [57]. Figure 5, reproduced below, illustrates a unicast network over which the interactive applications may be deployed.

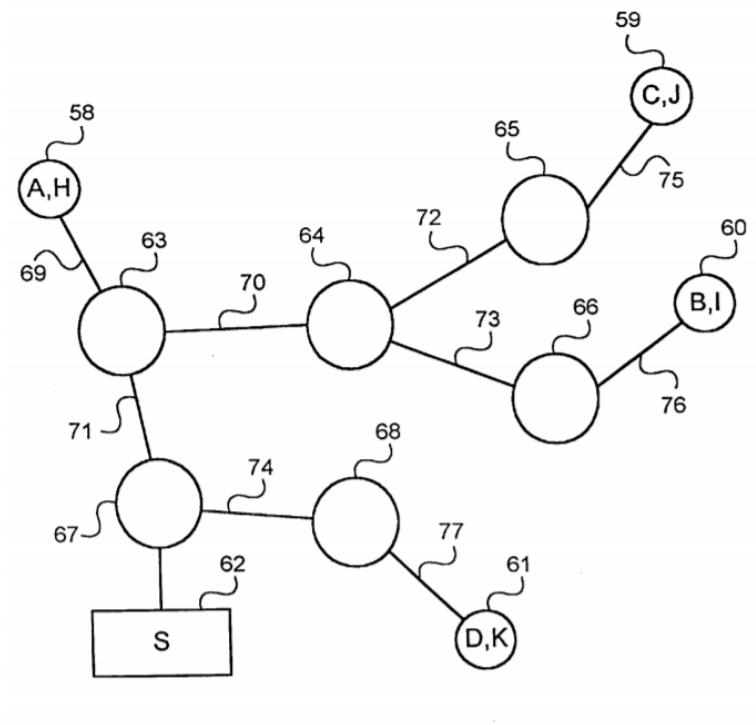

Figure 5

Figure 5 depicts a wide area network with hosts 58, 59, 60, and 61, and a group messaging server ("GMS") 62. *Id.* at 8:65–66. Host 58 has Transport Level Protocol (TLP) address A and Upper Level Protocol (ULP) address H. *Id.* at 8:66–67. Host 59 has TLP address C and ULP address J, host 60 as TLP address B and ULP address I, host 61 has TLP address D and ULP address K, and GMS 62 has TLP address S. *Id.* at 8:67–9:2. "The network is a conventional unicast network of network links 69, 70, 71, 72, 73, 74, 75, 76, and 77 and unicast routers 63, 64, 65, 66, 67, and 68." *Id.* at 9:2–5. GMS "62 receives messages from the hosts addressed to a message group and sends the contents of the messages to the members of the message group." *Id*. at 9:5–8.

Figure 7, reproduced below, depicts ULP datagrams with payload aggregations for implementing an interactive gaming application between the four hosts in Figure 5.

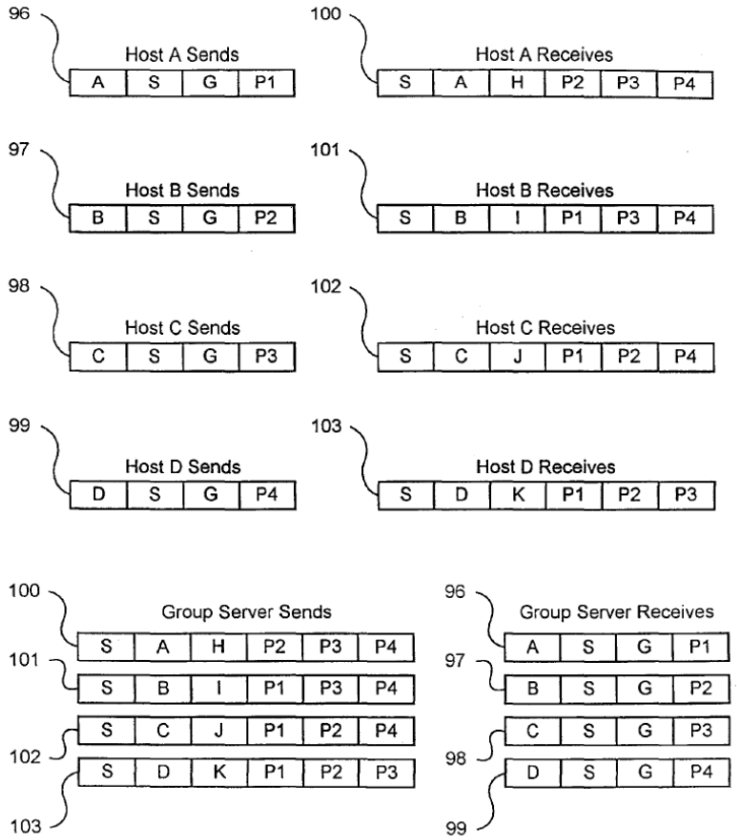

Figure 7

Figure 7 shows GMS ("Group Server") 62 receiving multiple messages 96, 97, 98, and 99 before sending them to hosts within message group G. *Id.* at 9, 18–20, 10:24–28. As shown in Figure 7, multiple messages 96, 97, 98, and 99, each respectively contain payload P1, P2, P3, and P4, to be aggregated into a single larger message, 100, 101, 102, or 103. *Id.* Host 58 sends message 96 (shown in Figure 7 as "Host A sends"), host 60 sends message 97 (shown in Figure 7 as "Host B sends"), host 59 sends message 98 (shown in Figure 7 as "Host C sends"), and host 61 sends message 99 (shown in Figure 7 as "Host D sends"), wherein each of the messages from the hosts has destination TLP address S and ULP address G for GMS 62. *Id.* at 10:28–32. After GMS 62 receives all four of these messages, it creates four outbound messages 100, 101, 102, and 103. *Id.* at

10:33–34. Aggregated message 100 includes destination TLP address A and ULP address H for host 58 and aggregated payload P2, P3, and P4, respectively, from the messages from hosts 59, 60, and 61. *Id.* at 10:38–40. Aggregated message 101 targets host 60, aggregated message 102 targets host 59, and aggregated message 103 targets host 61. *Id.* at 10:41–42.

Figure 9, reproduced below, depicts a datagram format and address format for ULP messages.

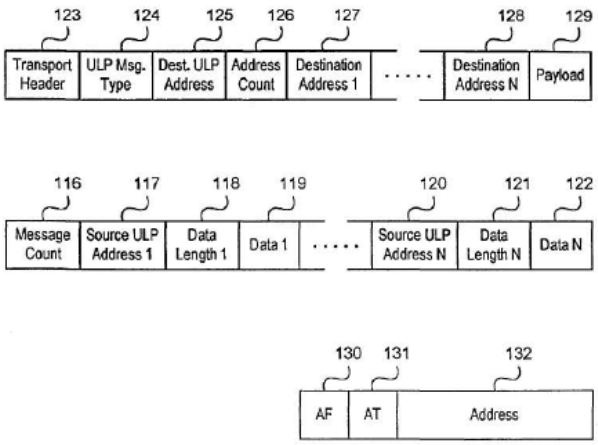

Figure 9

Figure 9 shows a ULP datagram message comprising elements 123, 124, 125, 126, 127, 128, and 129. *Id.* at 13:62–64. Transport datagram TLP header 123 encapsulates the ULP datagram that includes ULP message type field 124, destination ULP address 125, address count field 126, auxiliary destination address 127 and 128, and finally payload 129. *Id.* at 13:64–14:37. Items 116, 117, 118, 119, 120, 121, and 122 define the payload format of the ULP datagram. *Id.* at 14:38–39. Item 116 specifies the message count and defines the number of payload elements contained in the payload. Items 117, 118, and 119 comprise the first payload element in the payload, and items 120, 121, and 112 comprise the last payload element in

the payload. *Id.* at 14:39–48. In particular, item 117 specifies the ULP address of the source of the first payload element, item 118 specifies the data length for the data in the first payload element, and item 119 constitutes the actual data. Similarly, item 120 specifies the ULP address of the source of the last payload element N, item 121 specifies the data length for the data in the last payload element N, and item 122 constitutes the actual data. *Id.*

D. The Challenged Claims

Of the challenged claims, claims 1, 3, 7, 12, and 18 are the independent claims at issue. Claim 1 is illustrative of the challenged claims, and is reproduced below:

> 1. A method for facilitating communications among a plurality of host computers over a network to implement a shared, interactive application, comprising the steps of:
>
> (1) receiving a create message from one of the plurality of host computers, wherein said create message specifies a message group to be created;
>
> (2) receiving join messages from a first subset of the plurality of host computers, wherein each of said join messages specifies said message group;
>
> (3) receiving host messages from a second subset of said first subset of the plurality of host computers belonging to said message group, wherein each of said messages contains a payload portion and a portion that is used to identify said message group;
>
> (4) aggregating said payload portions of said host messages received from said second subset of the plurality of host computers to create an aggregated payload;
>
> (5) forming an aggregated message using said aggregated payload; and
>
> (6) transmitting said aggregated message to said first subset of the plurality of host computers belonging to said

> message group; wherein said aggregated message keeps tspeche shared, interactive application operating consistently on each of said first subset of the plurality of host computers.

Ex. 1002, 27:50–28:8.

E. Instituted Grounds of Unpatentability

We instituted trial on the following specific grounds (Pet. 20, 52):

Reference	Basis	Claim(s) Challenged
Aldred,[3] and RFC 1692[4]	§ 103	1–4, 7–21, 28–30, 34, 35, 39, 40, 47–49, 53, 54, 56, 57, 64–66, and 70
Aldred, RFC 1692, and RFC 1459[5]	§ 103	31–33, 50–52, and 67–69

Petitioner also relies on the testimonies of Dr. Steve R. White.[6] Exs. 1007, 1053. Patent Owner relies on the testimony of Dr. Kevin C. Almeroth. Ex. 2002.

II. ANALYSIS

A. Claim Construction

The parties agree that the ’686 patent expired. Pet. 5; PO Resp. 1. Accordingly, we construe its challenged claims as they would be construed in district court. *See* 37 C.F.R. § 42.100(b) (2017) (permitting a “district court-type claim construction approach . . . if a party certifies that the

[3] WO 94/11814 (May 26, 1994) (“Aldred”; Ex. 1009).

[4] Request for Comments (RFC) 1692 (Aug. 1994) (“RFC 1692”; Ex. 1010).

[5] Request for Comments (RFC) 1459 (May 1993) (“RFC 1459”; Ex. 1025).

[6] Petitioner superfluously cites the “Knowledge of an Ordinary Artisan,” which we do not repeat, as an obviousness determination takes into account that knowledge.

involved patent will expire within 18 months from the entry of the Notice of Filing Date Accorded to Petition").

In district court, claim terms carry their plain and ordinary meaning as would be understood by a person of ordinary skill in the art at the time of the invention and in the context of the entire patent disclosure. *Phillips v. AWH Corp.*, 415 F.3d 1303, 1313 (Fed. Cir. 2005) (en banc). "There are only two exceptions to this general rule: 1) when a patentee sets out a definition and acts as his own lexicographer, or 2) when the patentee disavows the full scope of a claim term either in the specification or during prosecution." *Thorner v. Sony Comput. Entm't Am. LLC*, 669 F.3d 1362, 1365 (Fed. Cir. 2012). Only terms in controversy must be construed and only to the extent necessary to resolve the controversy. *Vivid Techs., Inc. v. Am. Sci. & Eng'g, Inc.*, 200 F.3d 795, 803 (Fed. Cir. 1999); *Nidec Motor Corp. v. Zhongshan Broad Ocean Motor Co.*, 868 F.3d 1013, 1017 (Fed. Cir. 2017) (applying *Vivid Techs.* in the context of an *inter partes* review).

Petitioner notes Patent Owner "advanced several constructions for . . . claim elements" in prior district court litigation. *See* Pet. 5. Petitioner generally contends the "precise scope" of the terms need not be determined, provided the terms track "any interpretation consistent with their plain and ordinary meaning in the context of the [']686 [p]atent." *Id*. at 5–6.

After determining via a teleconference with the parties that with respect to three claim terms, Patent Owner's proposed constructions in its Preliminary Response differed from what Patent Owner provided in prior district court litigation (Paper 8, 2–4), we authorized the filing of a Preliminary Reply by Petitioner (Paper 9 ("Prelim. Reply")) and a Sur-Reply by Patent Owner (Paper 10 ("Prelim. Sur-Reply")) to address three terms:

"aggregated message," "aggregated payload," and "payload portion." In its Patent Owner Response (Paper 22, 1–15), Patent Owner maintains the constructions for "aggregated message" and "aggregated payload" it proposed in its Preliminary Response. As discussed below and as set forth in the Institution Decision, the constructions of the terms involve the overlapping issue of a transport layer header.

1. "aggregated message"(claims 1, 3, 7, 12); "server message" (claim 18)

Patent Owner contends "aggregated message" means "[o]ne or more messages containing a single transport layer message header, destination data, and data items from an aggregated payload." PO Resp. 5. Patent Owner relies on Figure 7 of the Specification as providing an example:

> Each of the messages 100, 101, 102 and 103 received by a host from a server includes the aggregated payloads (P_{n1}, P_{n2}, P_{n3}) in each message and a header portion consisting of a transport layer protocol source address (S) of the server, a transport layer protocol destination address (A, B, C or D) for the destination host and a destination upper layer protocol (ULP) address (H, I, J or K) for the destination host.

Id. at 7 (citing Ex. 1002, 8:1–10:67; Fig. 7).

Patent Owner contends Figure 7 discloses "only a single message header consisting of the transport layer protocol source address, the transport layer protocol destination address and the ULP address," which is then "combined with the aggregated payload." *Id.*

Patent Owner then relies on Figure 9 of the Specification. *Id.* Figure 9, annotated by Patent Owner, follows:

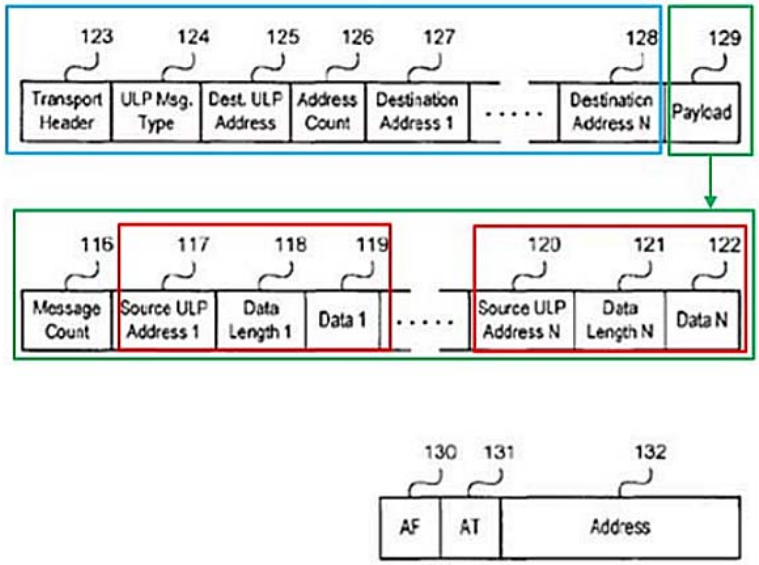

Figure 9

As annotated and described by Patent Owner, Figure 9 shows "an aggregated message" which includes "a message header (blue)[,] a payload (green)[, with] multiple payload elements (red) included as part of an aggregated payload." *Id*. at 8 (citing Ex. 1002, 14:37–52).[7] Although Patent

[7] Contrary to Patent Owner's argument, the '686 patent does not describe data elements 124–128 as part of the transport layer header. Rather, it indicates that the transport header 123 encapsulates those elements and the payload portion 129. *See* Ex. 1002, 13:59–66 ("The ULP can be implemented as a datagram protocol by *encapsulating addresses, message type information and the message payload within a datagram of the underlying network transport protocol*. The general form of the ULP datagram message format is shown in FIG. 9 as elements 123, 124, 125, 126, 127, 128 and 129. The transport header 123 is the datagram header of the TLP that is *encapsulating the ULP datagram*. The ULP message type field 124 . . . . *must be present in a ULP datagram*." (emphases added)); Ex. 1053 ¶¶ 6–8 (describing encapsulated payload and address portions as typical under the OSI, TCP, and IP frameworks and citing Dr. Almeroth's testimony from another proceeding). In any case, the outcome here does not depend on what the disclosed transport header includes in this particular disclosed example of Figure 9.

Owner concedes that "the payload 129 does include multiple Source ULP addresses 117, 120," Patent Owner contends that "the Source ULP addresses 117, 120 are not transport layer headers" because a "ULP source address is part of a layer above the transport layer (the Session Layer)." *Id.* at 9 (citing Ex. 2002 ¶¶ 48–49). That is, the "message header" consists of the "items highlighted in blue in [annotated] Fig. 9." *Id.* at 10.

Further, Patent Owner contends that the Specification "supports Patent Owner's construction." *Id.* In particular, the Specification states: "The GMS control function 136 will use the destination ULP host address to look up the TLP address of the host from the host address map 137," and "[t]his will be used to create a TLP header for the message **123**." *Id.* (citing Ex. 1002, 23:20–23 (emphasis included)). Thus, according to Patent Owner, "[t]here is . . . no indication in the '686 Patent that multiple TLP headers are included within the aggregated message," but instead, "[a] single transport layer header is used because all aggregated payloads are being transmitted to a same destination host running a same application as other hosts." *Id.* at 11 (citing Ex. 2002 ¶¶ 50–52).

Petitioner contends that the ordinary meaning of "aggregated message" or "server message" does not "require excluding any headers," but rather, the term "message" is "used by the '686 patent in [its] conventional sense." Pet. Reply 13 (citing Ex. 1053, ¶¶ 5–6; Ex. 1002, 1:28–55). Petitioner contends, similarly, "[t]he claims provide sufficient guidance on the meaning of . . . '*aggregated message*'/'*server message*,'" but they "do not support excluding any 'transport layer' headers." *Id.* at 14. Petitioner points out that Patent Owner's "district court construction of '*aggregating*/ *aggregated*' likewise includes no 'transport layer' header

requirement." *Id.* (citing Ex. 1055, 2–3), 17 (asserting that in prior district court proceedings, Patent Owner "never advanced a 'transport layer message header' requirement until after these proceedings were filed" (citing Ex. 1005, 396–97; Ex. 1006, 234–36; Ex. 1052, 108:8–24; Ex. 1054, and Ex. A, 1, 3).[8]

Petitioner contends that the Specification supports Petitioner's position of not excluding any "transport layer" headers. Pet. Reply 14. According to Petitioner, the '686 patent "explains the Internet Protocol (IP) and conventional networking use of the [Open Systems Interconnection] OSI reference model for layers of network protocols," wherein "OSI network layers are hierarchical—the packet for each layer (containing a header and payload) encapsulates the packets for the layers above." *Id.* According to Petitioner, in OSI network layers, "an IP packet payload may be an entire TCP packet including a TCP header and payload." Prelim. Reply 4 (citing Ex. 1011 (RFC 791), 1).

---

[8] Petitioner alleges the '686 patent creates a distinction between layers and levels. *See* Pet. Reply 18. The '686 patent references to "Level" protocols in Upper Level Protocol (ULP) or Transport Level Protocol (TLP), respectively, as associated with a "Session Layer protocol on top of the Transport Layer" of the network in the "OSI reference model." *See* Ex. 1002, 12:46–50; accord *id.* at 8:38–43. The '686 patent also refers to "the OSI reference model for layers of network protocols." *Id.* at 3:45–46. "On top of IP [at layer 3] are the layer 4 transport protocols TCP and ["User Datagram Protocol"] UDP." UDP does not guarantee "in-order delivery" of application datagrams of a data stream, whereas TCP divides the stream into packets to ensure "reliable, in-order delivery." *See id.* at 3:46–51. Our claim construction and holding does not turn on any alleged distinction between level and layer, but we agree with Petitioner that the '686 patent discusses TLP as either IP or TCP/IP. *See* Pet. Reply 18–19.

Petitioner provides the testimony in previous proceedings by Dr. Almeroth, Patent Owner's declarant, for explanation of encapsulation using the OSI model. *See* Pet. Reply 14–15. As an example, Petitioner provides the following diagram by Dr. Almeroth:

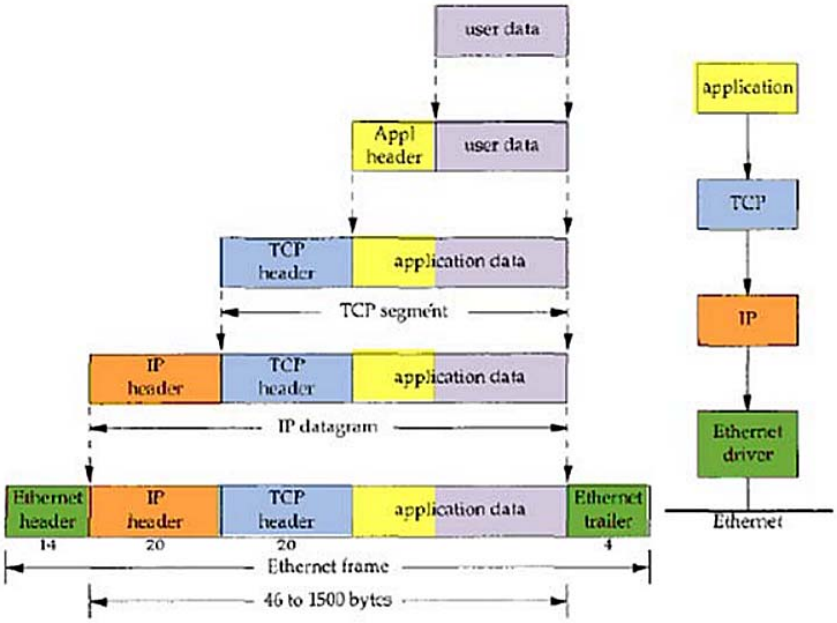

Pet. Reply 15 (reproducing the above figure from Ex. 1056 ¶ 68). The above figure represents encapsulation of higher layers, including Transmission Control Protocol ("TCP") segments and headers, as data forming an IP datagram. Dr. Almeroth explains as follows:

> This process of adding a layer header to the data from the preceding layer is sometimes referred to as "encapsulation" because the data and layer header is treated as the data for the immediately following layer, which, in turn, adds its own layer header to the data from the preceding layer. Each layer is generally not aware of which portion of the data from the preceding layer constitutes the layer header or the user data.

Ex. 1056 ¶ 68.

In summary, according to Dr. Almeroth, encapsulation using the OSI model involves treating upper level headers as data, and thus, Petitioner contends, "'*aggregated message*'/'*server message*' could have multiple TCP headers." Pet. Reply 15 (citing 1053 ¶¶ 7–8).

Further, Petitioner contends that Patent Owner impermissibly relies on a single embodiment in the '686 patent "where the server removes Transport Level Protocol (TLP) headers from received messages" to support its "transport layer" header requirement, although "the claims of the patent are not 'construed as being limited to that embodiment." Pet. Reply 16 (citing PO Resp. 4–11, 13–14; *Phillips v. AWH Corp.*, 415 F.3d 1303, 1323 (Fed. Cir. 2005)). In particular, Petitioner contends that the '686 patent supports more than a single embodiment, thereby impacting the breadth of an "aggregated message" (and the related term "aggregated payload"). *Id.*

We note Patent Owner advanced similar arguments prior to institution. Here, Patent Owner concedes the claims encompass encapsulated headers, as used in the OSI model. *See* PO Resp. 8 ("Patent Owner's construction position is not that the term 'aggregated message' does not encompass encapsulated headers.") (citing Inst. Dec. 13)).[9] According to Patent Owner, "Patent Owner's construction is that an 'aggregated message' or 'server message' includes only a **single transport layer message header**." PO Resp. 8–9. Nevertheless, as explained further below and above, and as Patent Owner concedes, the '686 patent supports

[9] Patent Owner's concession responds to the panel's preliminary determination in the Institution Decision stating "Patent Owner does not dispute, in a clear fashion, Petitioner's contention that the claims may encompass encapsulated headers." Inst. Dec. 13.

encapsulating header information as data, and thus, as Petitioner contends, "'*aggregated message*'/'*server message*' could have multiple TCP headers." Pet. Reply 15.

In response to Patent Owner's similar arguments prior to institution, the panel determined "on this preliminary record, that the Specification and evidence support an 'aggregated message' as including an aggregated payload and at least one header in addition to any that may happen to be within the aggregated payload." Inst. Dec. 15 (citing Prelim. Reply 1–5; Ex. 1016, 93; Ex. 1002, Fig. 7). In particular, the panel determined the following:

> headers, such as headers 117 and 118, or 120 and 121, appear in each payload. *See* Ex. 1002, 23:11–12 ("Each payload [includes] a ULP source address, a data length and the data to be sent."). Even though an embodiment strips out a TLP header from a "message," it looks up a TLP header of the host from "host address map 137." *Id.* at 23:20–22. The specification consistently shows that a payload, even within an aggregated payload, may contain header fields. *See, e.g., id.* at Fig. 9.

Inst. Dec. 12.

Here, Patent Owner does not dispute this preliminary finding but rather argues that there is "no indication in the '686 Patent that multiple TLP headers are included within the aggregated message." PO Resp. 11. However, the record supports the preliminary finding, and the parties agree, that the '686 patent discloses using TLP headers or a "datagram protocol" to encapsulate messages and/or payloads that include headers (e.g., address information, message type), as discussed above. *See* Ex. 1002, 13:59–62, 14:38–62, 26:28–45. As such, the '686 patent supports including any type

of a header, including TLP headers or other headers in the OSI model, as part of the data portion of encapsulated messages.

As Patent Owner also points out, the Institution Decision also includes the following preliminary finding: "The specification describes any data reduction as significant only for small packet sizes, and generally attributes data reductions due to message aggregation." *See* PO Resp.12 (citing Inst. Dec. 14; Ex. 1002, 24:23–28). As we noted in the Institution Decision, "the challenged claims do not limit the payload size and generally allow for different header types according to the Specification," wherein 'the Specification generally describes savings based on aggregation for all packet sizes based on "greatly reduc[ing] the total message rate received by the hosts,'" and "[t]he Specification therefore does not limit an aggregated payload, as claimed, from including headers in general." Inst. Dec. 13–14; Ex. 1002, 24:12–15, 24:38–47. We note Patent Owner does not urge a packet size limitation in its claim construction.

Patent Owner responds to this preliminary finding by arguing as follows:

> The '686 Patent however clearly discusses significant data reduction by eliminating transport headers from payloads. The '686 Patent states "[a]ggregation will also reduce the total data rate to the hosts **since aggregation eliminates the need for separate message headers for each payload item**. The savings will be significant for small payload items since there will be **only one message header** comprising fields 123, 124 and 125 for multiple payload items." Ex. 1002, 24:23–28 (emphasis added). The '686 Patent also states that an aggregated message is "longer and contains multiple payloads, but this is a significant improvement over received multiple messages **with the wasted overhead of multiple message headers** and message processing time." Ex. 1002, 10:44–47.

Id. at 12.

Patent Owner (*id.*) and Dr. Almeroth (Ex. 2002 ¶¶ 53–54) focus on reduced *data* rate, but the Specification *also* describes savings based on aggregation for all packet sizes based on "greatly reduc[ing] the *total message rate* received by the hosts," because "[a] single message to a host will be able to carry multiple payload items received from the other hosts during the aggregation period." Ex. 1002, 24:12–15 (emphasis added). This shows that savings in *message rate* occurs regardless of whether the data packet portion contains encapsulated header information, because no wasted overhead occurs in treating the encapsulated header data as data. So this *message rate* savings still occurs even if the encapsulated portion of the packet includes TCP header information, because the system processes that encapsulated header portion as data, as Dr. Almeroth explains as noted above. *See* Ex. 1056 ¶ 68; Ex. 1058 ¶ 56. The '686 patent supports this finding as it recognizes that "[a]ggregation will be very effective in collecting together all of the messages from all of the other hosts into a single message for each member of the group," and "*[t]his reduces processing . . . since a single message will be received rather than many separate messages*." Ex. 1002, 24:18–23. In other words, the reduced message rate benefit that accrues for a single message occurs regardless of the size of packets (each which may or may not include headers) aggregated in the single message. *See id*. The Specification, therefore, does not limit an aggregated message or server message, as claimed, from including encapsulated headers as data in a single aggregated message (which occurs

in the OSI model), including transport layer headers encapsulated within the payload.[10]

As Petitioner points out, the '686 patent supports more than a single embodiment. Pet. Reply 16. The Specification refers to a preferred embodiment as specifying "the TLP protocol is TCP/IP," and it states that for aggregated messages, "the [encapsulated] payload will still contain the source host ULP addresses in each [of] the payload items." Ex. 1002, 26:28–50. In general, however, the Specification supports many types of packets, further showing that the broad claims must not be limited to stripping TCP or TLP headers from a payload: "The wide area network used to transport the ULP protocol need not be the Internet or based on IP. Other networks with some means for wide area packet or datagram transport are possible including ATM networks or a digital cable television net-work." *Id.* at 27:38–43. Consistent with the '686 patent, a packet message includes at least one header, and packet bodies may contain encapsulated packets each with their own headers and bodies. *See* Prelim. Reply 4; Ex. 1016, 93; Ex. 1002, 3:28–56, Fig. 7, Fig. 9; Ex. 1011, 1; Ex. 1056 ¶ 68; Ex. 1058 ¶ 56; Ex. 1046 (PC NETWORKING HANDBOOK (1996)).[11]

---

[10] The Federal Circuit instructs that simply describing alternative features without articulating advantages or disadvantages of each feature cannot support a negative limitation. *Inphi Corp. v. Netlist, Inc.*, 805 F.3d 1350, 1356–57 (Fed. Cir. 2015). To the extent that excluding multiple TLP headers involves the advantage of data reduction, including other header types within the scope of the claim defeats any advantage of excluding a specific type from that scope.

[11] "A packet that contains data and delivery information is a datagram." Ex. 1046, 178. "Packets have two parts: the header and the body." *Id.* at 179. "The header carries information such as the source and destination of a packet." *Id.* "The body is the raw data carried by a packet or, *in many*

On this record, the '686 Specification supports Petitioner's argument that the claim term "aggregated message" or "server message," consistent with its ordinary and plain meaning, includes a message having an aggregated payload and at least one header in addition to any additional headers that may happen to be within the aggregated payload. Here, Patent Owner's past claim construction positions support this determination by showing, at the least, prior to this *inter partes* trial, how Patent Owner viewed the meaning of this claim term. *See* Ex. 1005, 396–97; Ex. 1006, 234–36; Ex. 1052, 108:8–24; Ex. 1054, and Ex. B, 1.[12]

2. "aggregated payload" (claims 1, 7, 12); "aggregating said payload portions" (claim 3); "aggregating said payload portion with the payload portion of a second host message" (claim 18)

Patent Owner contends "aggregated payload" should be construed as "[a] collection of two or more data items that does not include transport layer headers." PO Resp. 13. To support its construction, Patent Owner contends

> payload portions of messages, such as the messages 96, 97, 98, and 99 in FIG. 7, received by the group messaging server have TLP headers removed and are aggregated into an aggregated payload. The aggregated payload is included in a single

---

cases, another type of (encapsulate) packet that contains its own header and body." *Id*. (emphasis added).

[12] Petitioner notes that Patent Owner did not alter its original claim construction positions during district court litigation even up to about two and a half weeks prior to filing its Preliminary Response here on February 15, 2018, but altered its position to include the transport later requirements after filing the Preliminary Response. *See* Pet. Reply 17 (citing Ex. 1054, A-1; Ex. 1055, 2–4).

> aggregated message with a single transport layer message header. As explained above in Section II.A., the specification of the '686 Patent describes that transport layer headers are removed from messages sent to the group messaging server.

Id. at 14 (citing Ex. 1002, 20:14–30; Ex. 2002 ¶ 56).

Petitioner contends that "[the claims of] the '686 patent do not limit the content of '*payloads*' and thus does not limit what the claimed '*aggregated payload*' . . . can comprise." *See* Pet. Reply 13. Petitioner notes that, similar with "aggregated message" discussed above in Section II(A)(1), in prior litigation, Patent Owner also submitted a construction for "aggregating . . . said payload portions" without submitting the negative limitation regarding the "transport layer header" requirements. *See* Pet. Prelim. Reply 2 (citing Ex. 1016, 93, and 121–22). Petitioner contends, similar to the arguments concerning "aggregated message" in Section II(A)(1), "[t]he claims provide sufficient guidance on the meaning of 'aggregated payload,'" but they "do not support excluding any 'transport layer' headers." *Id.* at 14.

According to Petitioner, the Specification supports Petitioner's position of not excluding any "transport layer" headers. Pet. Reply 14. In particular, as an example, the Specification shows that a payload may include more than "actual data" 119, for example, "a triplet of source ULP address, data length and data." Ex. 1002, 14:38–43 (discussing items 117, 118, and 119). It also shows that a payload maybe "encapsulat[ed]" as a "datagram protocol." *Id.* at 13:59–62.

As Petitioner contends above in Section II(A)(1), "OSI network layers are hierarchical—the packet for each layer (containing a header and payload) encapsulates the packets for the layers above." Pet. Reply 14.

According to Petitioner's declarant, Dr. Almeroth, encapsulation using the OSI model involves treating upper level headers as data, wherein "[t]he 'payload portion' of an IP packet could thus comprise a TCP header." *Id.* at 15 (citing Ex.1053 ¶¶ 7–8).

Petitioner also relies on similar teachings in RFC 791, which states that the IP module that a TCP module calls could take "a TCP segment (including the TCP header and user data) as the data portion of an [IP datagram]." Pet. Reply 14 (citing Ex. 1011, 1).

For additional reasons similar to those explained above in construing "aggregated message" or "server message," an "aggregated payload," consistent with its ordinary and plain meaning, encompasses a collection of two or more data items that may include headers transported as data. Patent Owner's past claim construction positions support this determination by showing, at the least, prior to this *inter partes* trial, how Patent Owner viewed the meaning of this term. *See* Ex. 1005, 396–97; Ex. 1006, 234–36; Ex. 1052, 108:8–24; Ex. 1054, and Ex. B, 1.

B. Asserted Obviousness over Aldred, and RFC 1692; Aldred, RFC 1692 and Ulrich; or Aldred, RFC 1692 and Denzer

Petitioner alleges that claims 1–4, 7–21, 28–30, 34, 35, 39, 40, 47–49, 53, 54, 56, 57, 64–66, and 70 would have been obvious over Aldred and RFC 1692 as viewed by the knowledge of an ordinary artisan. Pet. 18–61. Petitioner also alleges that claims 31–33, 50–52, and 67–69 would have been obvious over the combination of Aldred, RFC 1692 in further view of RFC 1459. Pet. 61–69. Patent Owner raise several arguments in response. Prelim. Resp. 13–52. Brief overviews of Aldred, RFC 1692, and RFC 1459

follow, followed by an analysis of the parties' contentions regarding the challenged claims.

1. Principles of Law

A claim is unpatentable under 35 U.S.C. § 103(a) if the differences between the claimed subject matter and the prior art are such that the subject matter, as a whole, would have been obvious at the time the invention was made to a person having ordinary skill in the art to which said subject matter pertains. *KSR Int'l Co. v. Teleflex Inc.*, 550 U.S. 398, 406 (2007). The question of obviousness is resolved on the basis of underlying factual determinations, including (1) the scope and content of the prior art; (2) any differences between the claimed subject matter and the prior art; (3) the level of skill in the art; and (4) when in evidence, objective indicia of non-obviousness (i.e., secondary considerations). *See Graham v. John Deere Co.*, 383 U.S. 1, 17–18 (1966). We analyze this asserted ground based on obviousness with the principles identified above in mind.

2. Level of Skill in the Art

The level of skill in the art is a factual determination that provides a primary guarantee of objectivity in an obviousness analysis. *Al-Site Corp. v. VSI Int'l Inc.*, 174 F.3d 1308, 1324 (Fed. Cir. 1999) (citing *Graham*, 383 U.S. at 17–18; *Ryko Mfg. Co. v. Nu-Star, Inc.*, 950 F.2d 714, 718 (Fed. Cir. 1991)). Relying on the declaration of Dr. White, Petitioner asserts that a person of ordinary skill in the art at the time of the invention "would have had at least a master's degree (or equivalent course work) in computer science, computer engineering, or physics, and at least two years' experience related to networked interactive applications," or "at least a bachelor's degree in computer science, computer engineering, or physics, and

approximately four years' experience in networking interactive applications, or the equivalent, which would include experience in network programming." Pet. 4 (citing Ex. 1007 ¶¶ 42–43). Patent Owner does not assess the level of ordinary skill in the art.

We adopt the Petitioner's, and Dr. White's assessment of the level of ordinary skill in the art because it is consistent with the '686 patent and the asserted prior art, and apply it to our obviousness evaluation below. We also observe that the prior art of record reflects the level of ordinary skill in the art. *See Okajima v. Bourdeau*, 261 F.3d 1350, 1355 (Fed. Cir. 2001); *In re GPAC Inc.*, 57 F.3d 1573, 1579 (Fed. Cir. 1995); *In re Oelrich*, 579 F.2d 86, 91 (CCPA 1978).

3. Aldred

Aldred, titled "Collaborative Working in a Network," published as an International Application on May 26, 1994 from an application filed on November 10, 1993. Ex. 1009, at [54], [43], and [22]. Aldred relates to a "programmable workstation for collaborative working in a network," which includes a "collaborative application support subsystem for interfacing with application programs," wherein the subsystem "is responsive to predetermined application program calls to create a logical network model of a collaborative environment" that comprises a "sharing set of application programs, which share data and resources across nodes and logical dedicated data channels connecting members of the sharing set." Ex. 1009, at [57].

Figures 3 and 4, reproduced below, show a logical network model that comprises sharing sets of application programs between various nodes.

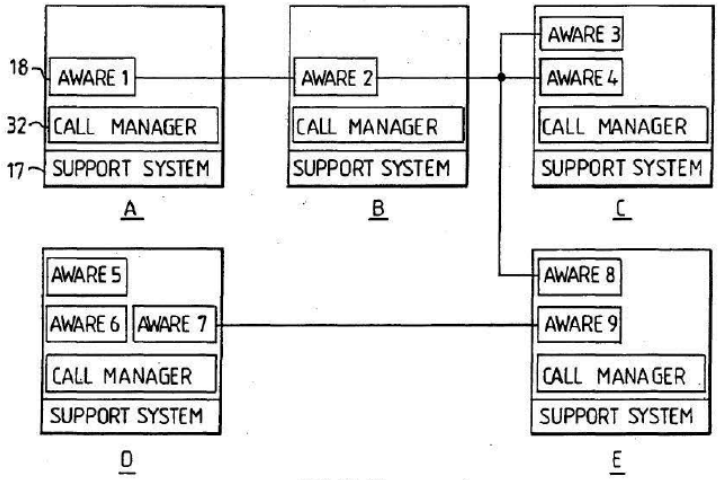

FIG. 3

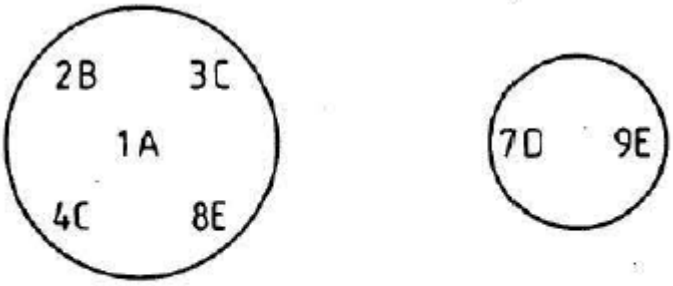

FIG. 4

Figure 3 depicts aware applications sharing data and resources between nodes A, B, C, D, and E. *Id*. at 5–6. Figure 4 depicts the two sharing sets resulting from the sharing of the aware applications in Figure 3. *Id.*

An aware application initiates a share request, naming an application sharing set, a target application and a destination node. *Id.* at 5. Support software passes the request to a call manager at the sending node, which then transfers it to the call manager at the destination node. *Id*. The sharing mechanism can be cascaded; for example, two sharing applications can initiate a share with a third application naming the same sharing set, with the result that all three applications then share with each other. *Id*.

Applications in a sharing set establish data communication links with each other known as channels. *Id.* at 6. As shown in Figures 3 and 4, various channels link aware applications at nodes A, B, C, and E, and one channel links aware applications at nodes D and E. *See* Figure 3 and 4. In particular, various channels link aware application 1 at node A, aware application 2 at node B, aware applications 3 and 4 at node C, and aware application 8 at node E, which all belong to the same sharing set. One channel links aware application 7 at node D and aware application 9 at node E, which belong to the same sharing set. *Id.*

A serializing channel set feature combines data packets from different channels, and deliver serialized packets to each application such that each receiving port receives the same sequence of data. *Id.* at 7.[13] Through this synchronizing feature, "data packets on separate channels are tied together in time (for example, voice with video), but delivered through the individual ports belonging to the channels." *Id.*

Figure 6, reproduced below, provides an example of a shared drawing board using serializing channel set 59 consisting of channels 57 and 58:

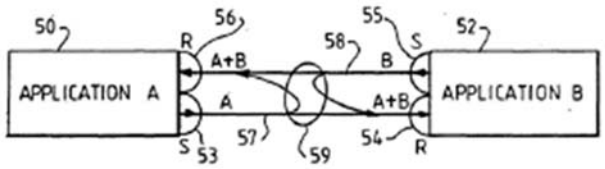

FIG. 6

With respect to Figure 6,

> [t]wo identical applications A and B (50 and 52) allow users to draw on a single shared surface. . . . [wherein] all [] drawing

[13] Aldred refers to "serialisation," but unless quoting Aldred or the parties, we refer to "serialization" throughout this Institution Decision.

> orders at [one node must be sent to the other node] in such a way that the sequence processed at [one node is] identical [to the one at the other.] This is accomplished by each [node] transmitting [its] own data both to each other and to [itself], over two channels 57 and 58 which are members of a common serializing channel set 59.

Id. at 7.

Serialization can be implemented at a single central point with all data being sent there for serialization and subsequent distribution. *Id.* at 9. Figure 19, reproduced below, shows the serializing process:

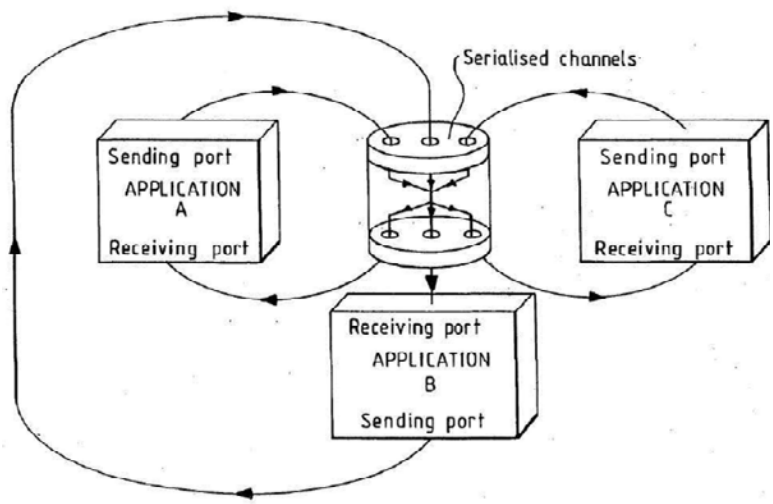

FIG. 19

Figure 19 depicts a collaborative group with established communication between members, applications A, B, and C, through various channels. *Id.* at 50. Each member application A, B, and C can receive data packets from any of the other members that "arrive at all the receiving ports in the identical sequence." *Id.*

With respect to each application, logical channels consist of a uni-directional data pipe with a sending port at one end and a receiving port

at the other. *See id.* With respect to the group, channels include one sending port and many receiving ports. *Id.* (discussing Fig. 15).

To join, a new member participant must "know[] the application name or an existing member and uses the same channel set name." *Id.* at 50. Thus, participants easily and regularly can join or leave the group. *Id.* at 47.

4. RFC 1692

RFC 1692, titled, "Transport Multiplexing Protocol (TMux)," published August 1994, is a document specifying an Internet standards track protocol for the Internet community, and requests discussion and suggestions for improvements. Ex. 1010, at 1. RFC 1692 discloses that TMux is a protocol which allows multiple short transport segment, independent of application type, to be combined between a server and host pair. *Id*. at Abstract. RFC 1692 recognizes that "the network and host load could be greatly reduced if traffic from multiple users, destined for the same host, could be sent in the same packet." *Id*. at 2. Thus, "TMux is designed to improve network utilization and reduce the interrupt load on hosts which conduct multiple sessions involving many short packets," by "multiplexing transport traffic onto a single IP datagram," thereby "resulting in fewer, larger packets." *Id.*

RFC 1692 explains that "it is the overhead of processing a packet which consumes a hosts' resources, not the processing of the data." *Id.* "[T]he work a host must do to process a 1-octet packet is very nearly as much as the work it must do to process a 1500-octet packet." *Id.* "[C]ommunication load is not measured only in bits per seconds but also in packets per seconds," and "the proposed multiplexing is aimed at alleviating this situation" of the "latter" as "the true performance limit" "in many

situations." *Id.* The method presents demultiplexed segments of the single IP datagram to the transport layer "as if they had been received in the usual IP/transport packaging." *Id.* at 2–3. The "[t]he transport layer is, therefore, unaware" of the "special encapsulation" employed in multiplexing "a set of transport segments into the same IP datagram." *Id.* at 3.

Thus, RFC 1692 discloses achieving multiplexing by combining the individual segments into a single message having an IP header followed by all the segments, each being preceded by a "4 octet TMux mini header." *Id.* at 3. In other words, RFC 1692 discloses achieving multiplexing by combining the individual packet bodies of different messages into a single message having an IP header followed by encapsulated segments, such that each message includes a "TMux mini- header which specifies the segment length and the actual segment transport protocol." *Id.*

RFC 1692 depicts a TMux message as follows:

```
| IP hdr | TM hdr | Tport segment | TM hdr | Tport segment| ...|
```

Id. In the TMux message represented above, "TM hdr" represents the mini-header, and "IP hdr" represents the "Internet Protocol (IP) header." *See id*.

RFC 1692 teaches that the disclosed multiplexing scheme involves removing the same IP hdr for each segment: "TMux first removes the IP header (if present) and adds a TMux mini-header and the segment to the Multiplexed Message under construction for the host specified by the destination address of the segment." *Id*. at 6.

> Only segments with the same Internet Protocol (IP) header, (with the possible exception of the protocol and checksum fields) may be combined. For example, the segment (H1, B1) and the segment (H2, B2), where Hi and Bi are the headers and the bodies of the segment, respectively, may be

> combined (multiplexed) only if H=H1=H2. *The combined TMux message is either (H, B1, B2) or (H, B2, B1).*

Id. at 3 (emphasis added).

5. RFC 1459

RFC 1459, titled "Internet Relay Chat Protocol," published May, 1993, is a memorandum defining an Experimental Protocol for the Internet community, and requests discussion and suggestions for improvements. Ex. 1025, at 1. RFC 1459 discloses an Internet Relay Chat (IRC) protocol for text based conferencing systems, wherein IRC represents a teleconferencing system, which (through the use of the client-server model) runs on many machines in a distributed fashion. *Id*. at 4. A typical IRC set up involves a single process (the server) forming a central point for clients (or other servers) to connect to, performing the required message delivery/multiplexing and other functions. *Id*. A channel, i.e., a named group of one or more clients which will all receive messages addressed thereto, is created when the first client joins it and ceases to exist when the last client leaves it. *Id*. at 5.

6. Prior Art Printed Publication Status of RFC 1459, and RFC 1692

Patent Owner does not challenge our initial determination in the Institution Decision that RFC 1692 (dated August 1994) and RFC 1459 (dated May 1993) were available to persons of ordinary skill interested in computer networking and security sufficiently to be deemed "publicly accessible" at the relevant time. *See* Inst. Dec. 25–30; *SRI Int'l, Inc. v. Internet Sec. Sys., Inc*., 511 F.3d 1186, 1194 (Fed. 21 Cir. 2008). For the reasons discussed in the Institution Decision, we maintain our preliminary

determination that RFC 1692 and RFC 1459 qualify as prior art printed publications.

7. Analysis

a. Motivation to combine Aldred and RFC 1692

Petitioner contends "Aldred discloses the serialising and transmission of data streams by a CSP ['central serialisation point']," where "[d]ata is sent over channels in packets," and where "each packet is added to a queue and then serially transmitted to each member of the Sharing Set associated with the serialised channel set." Pet. 31 (citing Ex. 1009, 9, 16, 51, and Fig. 22; Ex. 1007 ¶142). Although Petitioner acknowledges that "Aldred does not, however, explicitly disclose the claimed '*aggregating*,'" Petitioner contends, "RFC 1692 renders the claimed '*aggregating*' obvious." *Id.* According to Petitioner, RFC 1692 explains that "network and host load could be greatly reduced if traffic from multiple users, destined for the same host, could be sent in the same packet." *Id.* (citing Ex. 1010, 2). That is, "TMux is designed to improve network utilization and reduce the interrupt load on hosts which conduct multiple session involving many short packets . . . by multiplexing transport traffic onto a single IP datagram [2], thereby resulting in fewer, larger packets." *Id.*

Petitioner contends that "Aldred and RFC 1692 are both analogous art to the 686 patent," being all "from the fields of 'computer network systems,'" wherein "[i]t would have been obvious to an Ordinary Artisan in 1995 to modify Aldred's CSP to communicate with other nodes via RFC 1692's TMux protocol so as to '*aggregat[e] said payload portions*' as claimed." *Id.* at 32 (citing Ex. 1007 ¶ 145). According to Petitioner,

"Aldred also supports 'TCP/IP'" (*id.* (citing Ex. 1009, Fig. 10)), while "RFC 1692 discusses that although '[t]he use of the TMux protocol' in 'other situation[s] may require some modification,' it 'may be applicable to other situations where small packets are generated.'" *Id.* at 33 (citing Ex. 1010, 1–2).

Thus, "[a]n Ordinary Artisan would have understood that Aldred's system could likewise produce small packets that would benefit from RFC 1692's multiplexing." *Id.* (citing Ex. 1007 ¶146). Because "RFC 1692 explains that 'network and host load could be greatly reduced if traffic from multiple users, destined for the same host, could be sent in the same packet,'" the Ordinary Artisan "would have therefore been motivated to use TMux in Aldred's scheme for these benefits" because "TMux is an extension of the Internet Protocol (IP)" which "Aldred itself states 'has many benefits.'" *Id.* at 33–34 (citing Ex. 1010, 2, 6, 10; Ex. 1007 ¶¶ 147–148; Ex. 1009, 4). That is, "[a]s combined with RFC 1692, Aldred's messages would be multiplexed via TMux ('aggregat[ed]') into a single packet ('aggregated payload') prior to transmission from the CSP to each member of the serialising channel set associated with the Sharing Set." *Id.* at 35 (citing Ex. 1007 ¶¶150–151).

Patent Owner contends that "Petitioner's alleged motivation for this combination is based on its small packet centric argument that RFC 1692 provides benefits for systems generating a number of small packets." PO Resp. 17 (citing Pet. 33). Patent Owner contends that, however, "Petitioner has failed to consider several key factors," including as follows:

> (1) the requirement for "order" in the serialization operation of "all" packets in Aldred, and that order is not addressed in RFC 1692;
>
> (2) the possibility of large packets in the serialization process of Aldred;
>
> (3) how using the TMux protocol disclosed in RFC 1692 could disrupt the required order of the serialisation operation of Aldred in light of the disclosure in RFC 1692 that large packets should not be multiplexed and immediately transmitted; and
>
> (4) why a POSITA would turn to RFC 1692 when RFC 1692 would introduce additional latency into the system of Aldred and when Aldred already discusses alternative bandwidth solutions.

Id. at 18–19 (emphasis omitted).

In particular, Patent Owner contends that the CSP of Aldred "has a very specific function – ordering messages and transmitting the messages in that particular order" (*id.* at 20 (citing Ex. 1009, 51)), and that "Petitioner failed to consider the effects of large packets with respect to the serialization process of Aldred." *Id.* at 21 (emphasis omitted). According to Patent Owner, "Petitioner has also failed to consider the effect of larger packets on the packet order of the CSP of Aldred if the TMux protocol is included." *Id.* at 23.

Furthermore, Patent Owner contends that "Petitioner has also failed to consider why a POSITA would turn to RFC 1692 when Aldred already discusses alternative bandwidth saving solutions." *Id.* at 29.

Based on the record before us, we are unpersuaded by Patent Owner's contention that "Petitioner's analysis has provided an insufficient bases for the combination of Aldred and RFC 1692." PO Resp. 15.

As an initial matter, we agree with Petitioner that Patent Owner "unjustifiably assumes that every embodiment of Aldred would require the use of 'large' TCP segments," but "neither the challenged claims nor Aldred require 'large' packets," wherein "both encompass scenarios where only small packets are generated." Pet. Reply 7. According to Petitioner, Patent Owner's "'large' packet scenario does not show nonobviousness when the claim and Aldred's disclosure encompass systems that use only small packets." *Id.* at 8 (citing *Apple Inc. v VirnetX Inc.*, IPR2014-00237, paper 41, 40 (PTAB May 11, 2015)). That is, although Patent Owner contends that "Petitioner's alleged motivation for this combination is based on its small packet centric argument that RFC 1692 provides benefits for systems generating a number of small packets" (PO Resp. 17 (citing Pet. 33)), nothing in the challenged claims preclude a scenario in which small packets are generated. We agree with Petitioner's contention, to which Patent Owner does not contest, that, in scenarios where only small packets are generated, "[a]n Ordinary Artisan would have understood that Aldred's system could likewise produce small packets that would benefit from RFC 1692's multiplexing" (Pet. 33 (citing Ex. 1007 ¶146)) because the Ordinary Artisan would have realized that "[a]s combined with RFC 1692, Aldred's messages would be multiplexed via TMux ('aggregat[ed]') into a single packet ('aggregated payload') prior to transmission from the CSP to each member of the serialising channel set associated with the Sharing Set." Pet. 35 (citing Ex. 1007 ¶¶ 150–151).

Here, according to Petitioner's declarant, Dr. White, "[o]ne of ordinary skill in the art would have understood that drawing orders and other events used to keep data consistent between applications [in Aldred], such as

user input, would result in messages significantly smaller than the IP protocol supports, such that RFC 1692's methodology would improve Aldred's performance by reducing the number of packets." Ex. 1007 ¶ 146. Although Patent Owner provides testimony of its declarant, Dr. Almeroth's testimony tracks Patent Owner's arguments but does not contradict Dr. White's testimony that Aldred discloses small packet applications (*id.*), because Dr. Almeroth only points out that Aldred discloses some examples (e.g., video) of "data packets much larger than the drawing orders of Aldred [that] Petitioner uses as an example." *See* Ex. 2002 ¶ 70.

Nevertheless, as to Patent Owner's contention that Petitioner has failed to consider "the effect of larger packets on the packet order of the CSP of Aldred if the TMux protocol is included" (PO Resp. 23), we are persuaded by Petitioner's argument that "RFC 1692 discusses adding segments to a multiplexed message in the order they are received." Pet. Reply 4 (citing 1010 ¶¶ 6–7). In particular, Petitioner argues that "RFC 1692 expressly discloses that large TCP segments can be added to the end of any pending multiplexed packet, such that all segments would be sent in the order received." Pet. Reply 3. According to Petitioner, "RFC 1692 explains that when a segment that would not normally be multiplexed – such as a large segment – is received and a multiplexed message is under construction, 'the extra segment can be added to the TMux message under construction, and this complete message should be sent immediately . . . .'" *Id.* (citing Ex. 1010, 8–9). That is, RFC 1692 discloses that "large and small TCP segments can be sent in-order by the multiplexing process." *Id.* at 4 (citing Ex. 1053 ¶¶ 19–23).

In its Sur-Reply, Patent Owner does not dispute Petitioner's point and its declarant's, Dr. White's, testimony that the logical channels in Aldred guarantee order. *See generally* Sur-Reply; Reply 5; Ex.1053 ¶ 25. Rather, Patent Owner summarizes its position by, again, relying on its large packet argument. Sur-Reply 3 (arguing "smaller items would be removed from the serialization queue and added to the TMux buffer, and larger segments would be transmitted immediately"); *see also id.* at 3–4 (similar large packet arguments).

However, in Aldred, after demultiplexing, to the extent TMux does not maintain packet order, the higher level channel logical channel layer maintains packet order. *See* Ex. 1009, 6 (defining a channel "by the sending application" and "with application specified transmission characteristics," and stating "a receiving port . . . receives data packets from the channel in the order in which they were sent").

Furthermore, as Petitioner points out, by contending that combining Aldred and RFC 1692 would create "out-of-order" TCP segments, Patent Owner's contentions are premised on the assumption that "out-of-order TCP segments would go uncorrected by the combined system," whereas "Aldred's scheme maintains the order of serialized updates regardless of the order of IP packets transmitted by RFC 1692 through both Aldred's channel mechanism and the use of TCP." Pet. Reply 5.

We are also unpersuaded by Patent Owner's contention that a POSITA would not have turned to the teachings of RFC 1692 because "Aldred already discusses alternative bandwidth saving solutions." PO Resp. 29. As Petitioner contends, "the techniques by RFC 1692 were complementary to the techniques discussed in Aldred," wherein "Aldred's

disclosure of 'alternative bandwidth solutions' does not constitute a 'teaching away'" because it "does not criticize, discredit, or otherwise discourage the use of another." Pet. Reply 9 (citing *In re Fulton*, 391 F.3d 1195. 1200-1 (Fed Cir. 2004)). Citing to its declarant, Petitioner contends "[a]s Dr. White explained, when there is a high-volume of small packets and high data redundancy, TMux and compression are 'both obvious things to do' and '[y]ou can use them both at the same time. They're not exclusive.'" *Id.* (citing Ex. 2004, 54:21–55:20; Ex. 1053 ¶33). We agree with Petitioner that "'[a] person of ordinary skill is also a person of ordinary creativity, not an automaton." *Id.* (citing *KSR* at 419). That is, "obviousness requires only a showing 'that a skilled artisan would have been motivated to combine the teachings of the prior art references to achieve the claimed invention, and that the skilled artisan would have had a reasonable expectation of success from doing so.'" *Id.* at 10 (citing *Bristol-Myers Squibb Co. v. Teva Pharms. USA, Inc.*, 752 F.3d 967, 973 (Fed. Cir. 2014)).

b. Independent Claims 1, 3, 7, 12, and 18

Petitioner primarily relies on Aldred to teach and suggest all the limitations of independent claims 1, 3, 7, 12, and 18. Pet. 18–31, 39–46. To the extent Aldred does not teach all the limitations of independent claims 1, 3, 7, 12, and 18, Petitioner relies on either RFC 1692 or knowledge of the ordinary artisan to teach certain limitations. *Id.* at 31–38, 40, and 42.

In particular, Petitioner contends that "Aldred's serialisation logic transmits the same sequence of messages to each member of a Sharing Set in the same order to maintain consistency between the applications," such that "the users . . . [would] see identical results," and thus, "Aldred therefore discloses that these messages contain a 'payload portion' in the form of the

information (e.g., an event or drawing order) in the packet used to maintain consistency." *Id.* at 26–27 (citing Ex. 1009, 5–7, 16, 51, Figs. 19, 22; Ex. 1007 ¶130). Petitioner also contends that although "Aldred consequently does not explicitly disclose that 'each of said [host] messages contains . . . a portion that is used to identify said [] message group' . . . Aldred inherently discloses these feature." *Id.* at 27. Citing its declarant, Petitioner contends, "[a]s Dr. White explains, messages communicated between Aldred's nodes in [scenarios with users A, B, C, and D, each on a different node, participating in a variety of different and Sharing Sets] 'must necessarily identify the specific application sharing set to which they pertain.'" *Id.* at 27–28 (citing Ex. 1007 ¶134).

Petitioner then contends that "RFC 1692 renders the claimed 'aggregating' obvious," because "RFC 1692 discloses an improvement on the Internet Protocol called the Transport Multiplexing Protocol (TMux), which 'allows multiple short transport segments, independent of application type, to be combined between a server and host pair.'" *Id.* at 30 (citing Ex. 1010, 1). According to Petitioner, "TMux is designed to improve network utilization and reduce the interrupt load on hosts which conduct multiple sessions involving many short packets . . . by multiplexing transport traffic onto a single IP datagram . . . thereby resulting in fewer, larger packets." *Id.* at 31 (citing Ex. 1010, 2).

In response, Patent Owner contends that "Petitioner has failed to demonstrate that RFC 1692 discloses or suggests 'aggregating said payload portions of said host messages . . . to create an aggregated payload' [as recited in claims 1 and 3, and similarly recited in claims 7, 12, and 18]." PO Resp. 33 (emphasis omitted). Patent Owner also contends that "Petitioner

has failed to demonstrate that RFC 1692 discloses or suggests 'forming an aggregated message using said aggregated payload' [as recited in claims 1 and 12, and similarly recited in claims 3, 7, and 18]." *Id.* at 43.

We focus on the following limitations in the contested claims:

> i. "*aggregating said payload portions of said host messages received from said second subset of the plurality of host computers to create an aggregated payload" and "forming an aggregated message using said aggregated payload* " (claims 1 and 3)

Petitioner relies on Aldred to teach sending data in packets over channels, "where each packet is added to a queue and then serially transmitted to each member of the Sharing Set associated with the serialized channel set." Pet. 31 (citing Ex. 1009, 9, 51, Fig. 22; Ex. 1007 ¶ 142). Petitioner then relies on the disclosure of RFC 1692 for teaching or suggesting the claimed "aggregating" step. *Id*. at 31–35 (citing Ex. 1002, 1:10–16; 826–51; Ex. 1009, 2–4, 7, 9, 28–30, Fig. 10; Ex. 1010, 1–3, 6, 10; Ex. 1007 ¶¶ 143–151).

In particular, Petitioner relies on RFC 1692 for teaching, "an improvement on the Internet Protocol called the Transport Multiplexing Protocol (TMux)," which "allows multiple short transport segments, independent of application type, to be combined between a server and host pair," wherein "network and host load could be greatly reduced if traffic from multiple users, destined for the same host, could be sent in the same packet." *Id.* at 31 (citing Ex. 1010 at 1–2). That is, "TMux is designed to improve network utilization and reduce the interrupt load on hosts which conduct multiple sessions involving many short packets . . . by multiplexing transport traffic onto a single IP datagram," thereby "resulting in fewer,

larger packets." *Id* (citing Ex. 1010, 2). According to Petitioner, in TMux, "[t]he multiplexed packet comprises an IP header followed by one or more TMux mini-headers that specify respective transport segments (*i.e.*, the original payloads)." *Id*. at 31–32 (citing Ex, 1010, 3; Ex. 1007 ¶ 143).

Accordingly, Petitioner relies on RFC 1692 to also teach and suggest forming and creating an "aggregated message"/"server message," as recited in claims 1, 3, 7, 12, and 18. *Id*. at 36, 46. Petitioner contends, "RFC 1692's TMux functionality would construct a multiplexed message[sic] until a timer expires, at which point the multiplexed is complete." *Id*. at 36. According to Petitioner, "[a] completed TMux packet comprises an IP header ('IP hdr') followed by one or more TMux mini-headers ('TM hdr') that specify following transport segments ('Tport segment')." *Id.* (citing Ex. 1010, 3).

In response, Patent Owner asserts that "[t]he '686 Patent requires that an aggregated payload is a collection of two or more data items that does not include transport layer headers," whereas "RFC 1692 instead discloses combining separate messages together that retain transport layer headers as aggregated packets rather than an 'aggregated payload.'" PO Resp. 33 (emphasis omitted). That is, "RFC 1692 only discloses combining separate *messages* together as a TMuxed message" (*id.*), whereas "the '686 Patent describes the formed aggregated message as comprising a message that has only a single message header that is combined with aggregated payload items." *Id*. at 43.

Patent Owner acknowledges that each packet described in Figure 9 of the '686 patent, which Patent Owner refers to as a "payload," includes more than "actual data," i.e., each payload includes "the source ULP address 117

of the transmitted payload element, the data length 118 of the payload element and the actual data 119." *Id.* at 45–46 (citing Ex. 1002, 13:1–14:69, Fig. 9; Ex. 2002 ¶¶ 116–120). However, Patent Owner describes the TMux protocol of RFC 1692 as describing "a message of combined [encapsulated] messages":

> The Tport segments comprise individual messages which may be separately transported to a destination after they are broken up from a received combination of messages as described with respect to the TMux protocol. *Id.* After breaking them up, they still have data, addresses, and transport headers *encapsulated therein*, such that they can be transported and processed in accordance with the transport layer.

Id. at 47 (emphasis added).

Accordingly, Patent Owner contends that "the TMux protocol of RFC 1692, rather than forming a message containing an aggregated payload as recited . . ., instead describes a message including combined messages." *Id.* That is, contrary to the message in RFC 1692, "[a] formed aggregated message or server message of the '686 Patent comprises a single transport layer message header and an aggregated payload, generated by an aggregating step; an aggregated message of the '686 Patent is not comprised simply of combined messages as disclosed in RFC 1692." *Id.* at 50 (citing Ex. 2002 ¶ 130).

Patent Owner's argument that "[t]he '686 Patent requires that an aggregated payload is a collection of two or more data items that does not include transport layer headers" (PO Resp. 33) does not undermine Petitioner's showing, because we do not adopt Patent Owner's proposed claim construction. *See supra* Sections II(A)(1)–(2). In line with our claim construction, the claim term "aggregated payload," consistent with its

ordinary and plain meaning in light of the Specification, encompasses "a collection of two or more data items that may include headers transported as data." *Supra* Section II(A)(2).

As Patent Owner's declarant, Dr. Almeroth, testified in a previous proceeding, the "process of adding a layer header to the data from the preceding layer is sometimes referred to as 'encapsulation' *because the data and layer header is treated as the data for the immediately following layer*, which, in turn, adds its own layer header to the data from the preceding layer." Ex. 1056 ¶ 68 (emphasis added). Here, Patent Owner does not dispute that its disclosed header information (e.g., addresses) may be encapsulated. *See* PO Resp. 8 ("Patent Owner's construction position is not that the term 'aggregated message' does not encompass encapsulated headers"). Patent Owner's own description of the '686 patent shows that the patent describes combining different "payloads," each of which include ULP address and data length header information, similar to the process of TMux, which according to Patent Owner, includes "data, addresses, and transport headers *encapsulated therein*." *See* PO Resp. 47 (emphasis added). In other words, "aggregate message" may constitute or comprise packets with additional header information "encapsulated therein," as Patent Owner recognizes. *See id.* at 46 (quoting Ex. 1010, 2–3); Ex. 1010, 2–3 (describing "special encapsulation").

According to RFC 1692, and as quoted by Patent Owner, the TMux message involves "special encapsulation" of the underlying transport segments. PO Resp. 36 (quoting Ex. 1010, 2–3). That is, Patent Owner agrees that RFC 1692's TMux process involves encapsulation. *See* PO Resp. 47 (arguing the transport segments "still have data, addresses, and

transport headers encapsulated therein, such that they can be transported and processed in accordance with the transport layer").

In RFC 1692, the TMux message includes a single IP header (IP hdr) "equal to H," so the process strips out the IP header H for at least some of the segments (H, B1), (H, B2), (H, Bi) prior to combining them, and then combines (i.e., multiplexes) the two segments into aggregated packets having the TMux structure "(H, B1, B2) or (H, B2, B1)," "where Hi and Bi are the headers and the bodies of the segment, respectively." Ex. 1010, 3. In other words, "TMux removes the IP header (if present) and adds a TMux mini-header and the segment to the Multiplexed Message under construction." *Id.* at 6. Thus, the TMux process involves at least two steps, similar to the two disclosed steps of the '686 patent (as characterized by Patent Owner (PO Resp. 38–39)), and it involves encapsulation in which the system treats the bodies B1 and B2 (which include mini-headers) as data relative to the single IP header H and IP layer. *See* Ex. 1010, 6.

As Petitioner points out, the '686 patent states "the TLP protocol is TCP/IP" wherein the '686 patent "refers to a 'TCP/IP header' as a single header" (Pet. Reply 18–19 (citing Ex. 1002, 26:28–29)), and thus, "removing a TLP header encompasses removing the ***IP header alone***." *Id.* at 19. Similarly, in RFC 1692, the TMux process "first removes the IP header (if present)." *See* Ex. 1010, 6.

Therefore, even if we adopt Patent Owner's construction, according to Petitioner, "[a]s explained in the Petition and by Dr. White, Aldred in view of RFC 1692 results in an '*aggregated payload*' without any ***IP*** headers and an '*aggregated message*' with a single ***IP header***." Pet. Reply 19 (citing Pet. 36–38; Ex.1007, ¶¶ 68–76, 143; Ex.1053 ¶ 34).

In its Sur-Reply, addressing Petitioner's argument that "Aldred encourages multiplexing at lower layers—the very technique to which RFC 1692 is directed' (Pet. Reply 9), Patent Owner contends Petitioner takes Aldred's "statement . . . out of context." Sur-Reply 5 (citing Ex. 1009, 5). According to Patent Owner, "[m]ultiplexing in Aldred refers to the 'separation of data traffic,' such that 'voice, video and data traffic . . . can be sent over multiple channels' so that 'data components are presented individually.'" *Id.* (citing Ex. 1009, 30). Therefore, according to Patent Owner, "Aldred does ***not*** encourage the same technique to which RFC 1692 is directed – combining multiple messages into a single message for transmission." *Id.*

However, Patent Owner's argument (*id.*) mischaracterizes Aldred's teachings. Aldred describes "separation of data traffic into logical . . . flows of data" so that "[d]ata multiplexing can be implemented in different ways depending on the underlying transport mechanism," including, as an example, by "multiplexing all the data in the support layer." *See* Ex. 1009, 30. Contrary to Patent Owner's arguments, an artisan of ordinary skill would have understood that multiplexing in Aldred and RFC 1692 involves *combining* data units or packets—the opposite of separating. *See* Ex. 1010, 3 ("The TMux Protocol is defined to allow the *combining of transmission units* of different higher level protocols in one transmission unit of a lower level protocol." (emphasis added)).

Also, in Aldred, even if data separation occurs prior to multiplexing, this supports Petitioner's small packet theory, in which the claims embrace small packets disclosed by Aldred and multiplexed by RFC 1692, because the flow of small packet data from a chalkboard application in Aldred would

be separated from, for example, larger video packets. *See* Ex. 1053 ¶ 26 ("An Ordinary Artisan would understand the 'chalkboard' application can send only small messages and the 'file transfer' or 'voice/video link' applications can send only larger messages").

By contending that "RFC 1692 only discloses combining separate *messages* together as a TMuxed message," and "does not disclose aggregating *payload portions* to create an *aggregated payload*" (PO Resp. 33), Patent Owner appears to attempt to distinguish combining messages from combining packet payloads by emphasizing the combining of "messages" in the TMux process. However, Patent Owner does not set forth a material difference between combining messages that include payloads and combining payloads. *See* PO Resp. 33, 42.

Nevertheless, Aldred's messages, like those of the TMux protocol, come in packet form, and as described above, the '686 patent's disclosed system combines more than packet "actual data." *See* Ex. 1002, 14:41–47 ("A single payload element consists of a triplet of source ULP address [117], data length [118], and data [119]," where "item 119 is the actual data"); Ex. 1009, 7 (describing "data packets"), 64 (disclosing TCP/IP); Ex. 1010, 16 ("Data is sent over channels by applications in packets; at the physical level the unit of data transmission is a frame.") According to RFC 1692, "[t]he TMux protocol is intended to optimize the transmission of large numbers of small *data packets*." Ex. 1010, 1 (emphasis added). "It does this by multiplexing transport traffic onto a single IP datagram [2], *thereby resulting in fewer, larger packets*." *Id.* at 2 (emphasis added).

In addition, the '686 patent generally refers to aggregating the "contents of messages." Ex. 1002, [57] ("Rather than simply forward each

message to its targeted hosts, the group messaging server *aggregates the contents of each of messages* received during a specified time period and then sends an aggregated message to the targeted hosts." (emphasis added)). The '686 patent also states "[a] key concept in the present invention is the *aggregation of multiple messages* in a message queue into a single ULP receive message to a host that contains multiple payload items in the payload." *Id.* at 23:50–53 (emphasis added).

Here, claim 1 of the '686 patent recites "aggregating . . . said payload portions" and "forming an aggregated message using said aggregated payload," but the Specification does not restrict a payload from containing multiple items, including address information *See* Ex. 1002, [57], 14:41–47, 27:65–28:2. Neither does it restrict the process from combining message portions that contain payloads to create an aggregated message of aggregated payloads. *Id.* As noted, the '686 patent generally allows "aggregate[ing] the contents of . . . messages," wherein aggregating messages also includes aggregating payload items. S*ee id.* [57]. By stripping out the IP header of each packet segment, RFC 1692's TMux involves aggregating payload items as called for by the challenged claims in light of the '686 Specification. *See* Ex. 1010, 6 ("TMux first removes the IP header (if present)").

Based on the foregoing, and after consideration of Patent Owner's remaining arguments addressed below, Petitioner shows that the combination of Aldred and RFC 1692 would have suggested the claimed aggregating and forming steps, including the steps of aggregating packet portions using a well-known TMux protocol in order to allow hosts to form a message of several packet messages with a single IP header instead of

individually processing many message packets individually header by header. On this record, we are persuaded Petitioner has demonstrated by a preponderance of the evidence that the combination of Aldred and RFC 1692 teaches or suggests these claimed limitations of claims 1, 3, 7, 12, and 18.

ii. *Remaining limitations*

Petitioner provides explanations and supporting evidence regarding the remaining limitations in independent claims 1, 3, 7, 12, and 18. *See generally* Pet. 18–46. We have reviewed Petitioner's explanations and supporting evidence regarding these remaining limitations, as well as Petitioner's assertion that a person of ordinary skill in the art would have had a sufficient reason to combine or modify the teachings of the references, and we find them sufficiently persuasive. *Id.* We adopt Petitioner's showing as our own.

Patent Owner does not address separately Petitioner's showing as to these added limitations. *See generally* Pet. Resp. Based on the foregoing and a review of the record, Petitioner demonstrates that the combination of Aldred and RFC 1692 would have rendered obvious these remaining limitations of independent claims 1, 3, 7, 12, and 18.

c. <u>Claims 30, 34, 35, 49, 53, 54, 66, and 70</u>

Petitioner relies on Aldred to teach and suggest that nodes join or create a sharing set by sending a "share_app" request to another workstation or node, and can leave a sharing set by sending an "unshare_app" request. Pet. 58–61 (citing Ex. 1009, 15). In particular, Petitioner contends, "an Ordinary Artisan" would understand that a sharing set is removed "once the last application in a Sharing Set issues an 'unshare_app' request." *Id.*

In response, Patent Owner contends "Aldred does not disclose that 'share_app' or 'unshare_app' requests are sent to a CSP in order for a node/application to leave a sharing set," or that "in response to a received 'share_app' request, the CSP adds nodes to the sharing set, removes nodes from the sharing set or stores or removes information regarding the nodes." PO Resp. 51–52. In particular, "'share_app' and 'unshare_app' requests are not sent to the CSP to carry out any of the recited functions in the claims." *Id.* We are also unpersuaded by Patent Owner's contentions.

Aldred supports Petitioner's showing, disclosing centrally located CSPs with serialized channels, and all data passes through the CSP from each host. *See* Ex. 1009, Figs. 17–19, 9 ("Serialisation can be implemented at a single central point with all data being sent there for serialisation and subsequent distribution . . . "). As Petitioner contends, "Aldred's CSP has a central role in maintaining communications for Sharing Sets that utilize serialized channels," wherein "Aldred's serialization is maintained through a channel set table on the CSP." Pet. Reply 24 (citing Ex. 1009, 9, 51). According to Petitioner, in Aldred, "this serialization is performed on a central point, illustrated in Figure 9." *Id.* Relying on its declarant, Petitioner contends "Dr. White explains that Aldred's CSP is a workstation in Aldred's network and is thus a '*server*.'" *Id.* at 24–25. Petitioner contends that Patent Owner's declarant, Dr. Almeroth, "confirmed during his deposition that the channel set table ***must*** be updated as Sharing Sets are created and modified," wherein "a node will ***only*** receive data if it has its address in the channel set table" and that "the serialization process sends data to every port in the channel set." *Id.* at 25–26 (citing Ex. 2002 ¶137; Ex. 1052, 48:21–49:8, 101:10–22, 103:9–25). Thus, Petitioner contends "[t]o maintain an accurate

channel set, as Dr. White explains, the CSP must be involved in these processes." *Id.* at 26. We adopt Petitioner's showing as our own.

Based on the foregoing discussion, Petitioner shows persuasively that the combination of Aldred and RFC 1692 render obvious claims 30, 34, 35, 49, 53, 54, 66, and 70.

d. Claims 2, 4, 8–11, 13–17, 19–21, 28, 29, 31–33, 39, 40, 47, 48, 50–52, 56, 57, 64, 65, and 67–69

Petitioner provides explanations and supporting evidence regarding the alleged obviousness of independent claims 2, 4, 8–11, 13–17, 19–21, 28, 29, 31–33, 39, 40, 47, 48, 50–52, 56, 57, 64, 65, and 67–69. *See* Pet. 47–69. We have reviewed Petitioner's explanations and supporting evidence regarding these remaining limitations, and are persuaded Petitioner has demonstrated by a preponderance of the evidence that a person of ordinary skill in the art would have had a sufficient reason to combine or modify the teachings of the references to arrive at the contested limitations. *See id.* We adopt Petitioner's showing as our own.

Patent Owner merely repeats the claim language but does not separately address Petitioner's showing. *See generally* PO Resp. 53–56. Based on the record before us, we are persuaded Petitioner has demonstrated by a preponderance of the evidence that claims 2, 4, 8–11, 13–17, 19–21, 28, 29, 39, 40, 47, 48, 56, 57, 64, and 65 would have been obvious over the combination of Aldred and RFC 1692; and that claims 31–33, 50–52, and 67–69 would have been obvious over the combination of Aldred, RFC 1692 in further view of RFC 1459.

III. CONCLUSION

For the foregoing reasons, we are persuaded on the record at hand that Petitioner has demonstrated by a preponderance of the evidence that claims 1–4, 7–21, 28–34, 35, 39, 40, 47–54, 56, 57, and 64–70 are unpatentable under 35 U.S.C. § 103 as obvious over Aldred and RFC 1692, or over Aldred, RFC 1692 and RFC 1459.

IV. ORDER

For the reasons given, it is

ORDERED that Petitioner has shown by a preponderance of the evidence that claims 1–4, 7–21, 28–34, 35, 39, 40, 47–54, 56, 57, and 64–70 of the ’686 patent are unpatentable under 35 U.S.C. § 103 as obvious over Aldred, RFC 1692 (and RFC 1459); and

FURTHER ORDERED that this is a Final Written Decision under 35 U.S.C. § 318(a), and that parties to the proceeding seeking judicial review of the decision under 35 U.S.C. § 319 must comply with the notice and service requirements of 37 C.F.R. § 90.2.

PETITIONER:

Joseph A. Micallef
Samuel A. Dillon
SIDLEY AUSTIN LLP
jmicallef@sidley.com
samuel.dillon@sidley.com

PATENT OWNER:

Gregory M. Howison
Keith D. Harden
Brian D. Walker
MUNCK, WILSON, MANDALA, LLP
ghowison@munckwilson.com
kharden@munckwilson.com
bwalker@munckwilson.com

CERTIFICATE OF SERVICE

I hereby certify that the original of this Notice of Appeal was filed via U.S.P.S. Priority Mail Express on June 12, 2019 with the Director of the United States Patent and Trademark Office at the address below:

Office of the General Counsel
Director of the U.S. Patent & Trademark Office
United States Patent and Trademark Office
P.O. Box 1450
Alexandria, VA 22313-1450

Priority Mail Express Tracking No.: EK 324803637 US

A copy of this Notice of Appeal is being filed and served on June 12, 2019 as follows:

To the USPTO Patent Trial and Appeal Board:
Patent Trial and Appeal Board
Madison Building East
600 Dulany Street
Alexandria, VA 22313

(via PTAB E2E, as authorized by the Board)

To the U.S. Court of Appeals for the Federal Circuit:
Clerk of Court
U.S. Court of Appeals for the Federal Circuit
717 Madison Place, N.W.
Washington, DC 20439

(via CM/ECF – with filing fee)

To Counsel for Petitioner Riot Games, Inc.:

Joseph A. Micallef
Scott M. Border
Samuel A. Dillon

SIDLEY AUSTIN LLP
1501 K Street, N.W.
Washington, D.C. 2005
riot_paltalk@sidley.com

(via email pursuant to 37 C.F.R. § 42.6(e))

To Counsel for Petitioner Valve Corp.:

Reynaldo C. Barcelo
rey@bhiplaw.com
BARCELO, HARRISON & WALKER, LLP

Kyle Friesen
kfriesen@shb.com
Sharon A. Israel
sisrael@shb.com
Patrick A. Lujin
plujin@shb.com
SHOOK, HARDY & BACON L.L.P.

(via email pursuant to 37 C.F.R. § 42.6(e))

ARMOND WILSON LLP

June 12, 2019

/ Douglas R. Wilson /
Douglas R. Wilson (Reg. No. 54,542)

Counsel for Patent Owner
PALTALK HOLDINGS, INC.