UNITED STATES PATENT AND TRADEMARK OFFICE

BEFORE THE PATENT TRIAL AND APPEAL BOARD

BAKER HUGHES INCORPORATED and BAKER HUGHES OILFIELD OPERATIONS, INC,
Petitioners

v.

PACKERS PLUS ENERGY SERVICES INC.,
Patent Owner

Case IPR2016-01380
Patent 9,303,501

EXCLUSIVE LICENSEE'S NOTICE OF APPEAL

Pursuant to 35 U.S.C. §§ 141 and 142 and 37 C.F.R. §§ 90.2(a), 90.3 and 104.2, Exclusive Licensee, Rapid Completions LLC, ("Rapid Completions") hereby provides notice of its appeal to the United States Court of Appeals for the Federal Circuit for review of the Final Written Decision of the United States Patent and Trademark Office ("USPTO") Patent Trial and Appeals Board ("PTAB") in Inter Partes Review 2016-01380, concerning U.S. Patent 9,303,501 ("the '501 patent"), entered on May 2, 2019, attached hereto as Appendix A.

ISSUES TO BE ADDRESSED ON APPEAL

A. Whether the PTAB erred in concluding that claims 1–9 would have been obvious under 35 U.S.C. § 103 in view of Thomson, Ellsworth, and Halliburton;

B. Whether the PTAB erred in concluding that Halliburton is a printed publication;

C. Whether the PTAB erred in giving insufficient weight to Patent Owner's secondary considerations of non-obviousness;

D. Whether the PTAB erred in conclude that Patent Owner did not demonstrate a nexus to the claimed invention of the '501 patent;

E. Whether the PTAB erred in concluding that Patent Owner did not demonstrate commercial success;

F. Whether the PTAB erred in concluding that Patent Owner did not demonstrate copying of the claimed invention;

G. Whether the PTAB erred in concluding that Patent Owner did not show that the claimed invention was contrary to accepted wisdom and produced unexpected results; and

H. Whether the PTAB erred in concluding that a person of ordinary skill in the art would have been motivated to combine the teachings of the prior art and would have achieved the claimed inveniton with a reasonable expectation of success.

Rapid Completions reserves the right to challenge any finding or determination supporting or related to the issues listed above, and to challenge any other issues decided adversely to Rapid Completions in the Final Written Decision and/or any orders, decisions or rulings underlying the Final Written Decision.

Simultaneous with submission of this Notice of Appeal to the Director of the United States Patent and Trademark Office, this Notice of Appeal is being filed with the Patent Trial and Appeal Board. In addition, this Notice of Appeal, along with the required docketing fees, is being filed with the United States Court of Appeals for the Federal Circuit.

Respectfully submitted,

Dated: June 25, 2019

/Gregory J. Gonsalves/

Dr. Gregory Gonsalves
Reg. No. 43,639
2216 Beacon Lane
Falls Church, Virginia 22043
(571) 419-7252
gonsalves@gonsalveslawfirm.com

CERTIFICATE OF SERVICE

The undersigned certifies that in addition to being filed electronically through the Patent Trial and Appeal Board's E2E system the foregoing NOTICE OF APPEAL was served on the Director of the United States Patent and Trademark Office, at the following address (in accordance with 37 C.F.R. §§ 90.2(a), 104.2):

Director of the United States Patent and Trademark Office

c/o Office of the General Counsel

United States Patent and Trademark Office

P.O. Box 1450 Alexandria, Virginia 22313-1450

CERTIFICATE OF FILING

The undersigned certifies that on June 26, 2019, a true and correct copy of the foregoing NOTICE OF APPEAL was filed electronically with the Clerk's Office of the United States Court of Appeals for the Federal Circuit at the following address:

Clerk of Court

United States Court of Appeals for the Federal Circuit

717 Madison Place NW

Washington, DC 20005

CERTIFICATE OF SERVICE

The undersigned hereby certifies that a copy of the foregoing NOTICE OF APPEAL was served on June 25, 2019, by filing this document though the PTAB's E2E system as well as by delivering a copy via electronic mail to the attorneys of record for the Petitioners as follows:

Mark T. Garrett (Lead Counsel)
Eagle H. Robinson (Back-up Counsel)
NORTON ROSE FULBRIGHT US LLP
mark.garrett@nortonrosefulbright.com
eagle.robinson@nortonrosefulbright.com

Dated: June 25, 2019

/Gregory J. Gonsalves/
Dr. Gregory Gonsalves
Reg. No. 43,639
2216 Beacon Lane
Falls Church, Virginia 22043
(571) 419-7252
gonsalves@gonsalveslawfirm.com

Appendix A

Trials@uspto.gov
571-272-7822

Paper 79
Entered: June 21. 2019

UNITED STATES PATENT AND TRADEMARK OFFICE

BEFORE THE PATENT TRIAL AND APPEAL BOARD

BAKER HUGHES INCORPORATED
and
BAKER HUGHES OILFIELD OPERATIONS, INC.,
Petitioner,

v.

PACKERS PLUS ENERGY SERVICES, INC.,
Patent Owner.

Case IPR2016-01380[1]
Patent 9,303,501 B2

Before SCOTT A. DANIELS, NEIL T. POWELL, and
CARL M. DEFRANCO, *Administrative Patent Judges.*

POWELL, *Administrative Patent Judge.*

FINAL WRITTEN DECISION
35 U.S.C. § 318(a) and 37 C.F.R. § 42.73

[1] IPR2017-00247 has been joined with IPR2016-01380.

I. INTRODUCTION

Packers Plus Energy Services Inc. ("Patent Owner") is the owner of Patent No. 9,303,501 B2 (Ex. 1001, "the '501 patent"). Baker Hughes Incorporated and Baker Hughes Oilfield Operations, Inc. (collectively, "Petitioner") filed a Petition challenging claims 1–9 of the '501 patent. IPR2016-01380, Paper 1 ("1380 Petition" or "1380 Pet."). Rapid Completions LLC, the exclusive licensee of the '501 patent, filed a Preliminary Response. IPR2016-01380, Paper 11 ("1380 Preliminary Response" or "1380 Prelim. Resp."). In view of those submissions, we instituted an *inter partes* review of claims 1–9 of the '501 patent. IPR2016-01380, Paper 12 ("1380 Institution Decision" or "1380 Dec. on Inst."). Subsequently, Patent Owner filed a Patent Owner Response (IPR2016-01380, Papers 18, 19[2], "1380 PO Response" or "1380 PO Resp."), and Petitioner filed a Petitioner Reply (IPR2016-01380, Paper 67, "1380 Petitioner Reply" or "1380 Pet. Reply").

In the 1380 Institution Decision, we declined to institute *inter partes* review on a subset of the claim challenges presented by the 1380 Petition. 1380 Dec. on Inst. 20–21. On May 15, 2018, we ordered that "our institution decision is modified to include review of all challenged claims and all grounds presented in the Petition" (Paper 57, 2), reintroducing certain challenges into this proceeding. Subsequently, to address the reintroduced claim challenges, Patent Owner filed a Supplemental Brief Regarding Ground 3 (Paper 59, "1380 PO Supplemental Brief" or "1380 PO Supp.

[2] Paper 18 is a private, unredacted version of the Patent Owner Response, and Paper 19 is a public, redacted version of the Patent Owner Response.

Br."), and Petitioner filed a Supplemental Brief Regarding Ground 3 (Paper 63, "1380 Petitioner's Supplemental Brief" or "1380 Pet. Supp. Br.").

In IPR2017-00247, Petitioner presented a different challenge of claims 1–9 of the '501 patent in another Petition. IPR2017-00247, Paper 1 ("247 Petition" or "247 Pet."). Rapid Completions LLC filed a Preliminary Response. IPR2017-00247, Papers 12, 13[3] ("247 Preliminary Response" or "247 Prelim. Resp."). In view of those submissions, we instituted an *inter partes* review of claims 1–9 of the '501 patent. IPR2017-00247, Paper 14 ("247 Institution Decision" or "247 Dec. on Inst."). Additionally, we granted Petitioner's motion to join IPR2017-00247 with IPR2016-01380. IPR2017-00247, Paper 27. Addressing the ground presented in the 247 Petition, Patent Owner filed a Patent Owner Response (IPR2017-00247, Paper 23, "247 PO Response" or "247 PO Resp."), and Petitioner filed a Petitioner Reply (IPR2016-01380[4], Paper 45, "247 Petitioner Reply" or "247 Pet. Reply"). All of the grounds presented in the Petition for IPR2016-01380 and the ground presented in the Petition for IPR2017-00247 are pending in this *inter partes* review.

We have jurisdiction over this proceeding under 35 U.S.C. § 6(b). After considering the evidence and arguments of the parties, we determine that Petitioner has proven by a preponderance of the evidence that claims 1–

[3] Paper 12 is a private, unredacted version of the Patent Owner Response, and Paper 13 is a public, redacted version of the Patent Owner Response.
[4] This paper (and each subsequent paper) appears in the record of IPR2016-01380 because it was filed after IPR2017-00247 was joined with IPR2016-01380.

9 of the ’501 patent are unpatentable. *See* 35 U.S.C. § 316(e). We issue this Final Written Decision pursuant to 35 U.S.C. § 318(a).

II. BACKGROUND

A. The ’501 Patent

The ’501 patent discloses an apparatus and method for fluid treatment of a wellbore. Ex. 1001, 1:29–32. The ’501 patent discloses that many prior systems required inserting a tubing string into a bore hole “with the ports or perforations already opened.” *Id.* at 2:22–24. The ’501 patent states that this “can hinder the running operation and limit usefulness of the tubing string.” *Id.* at 2:27–29. The ’501 patent addresses this problem, disclosing that its “method and apparatus provide for the running in of a fluid treatment string, the fluid treatment string having ports substantially closed against the passage of fluid therethrough, but which are openable when desired to permit fluid flow into the wellbore.” *Id.* at 2:38–42. Regarding applications for its system, the ’501 patent discloses that “[t]he apparatus and methods of the present invention can be used in various borehole conditions including open holes, cased holes, vertical holes, horizontal holes, straight holes or deviated holes.” *Id.* at 2:42–46.

The ’501 patent shows details of a wellbore fluid treatment assembly in Figure 1b. *Id.* at 6:11–13. Figure 1b is reproduced below.

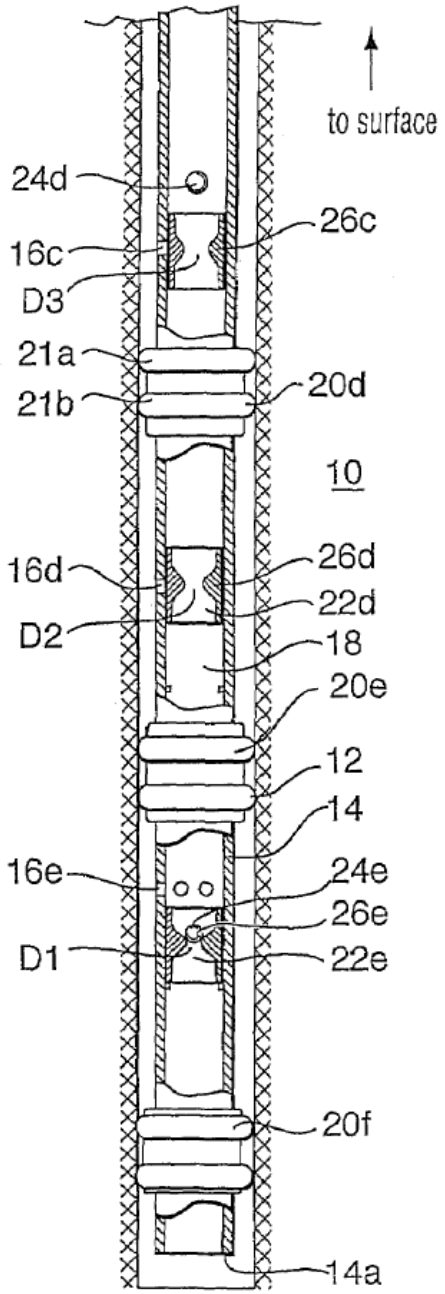

FIG. 1b

Figure 1b shows a wellbore fluid treatment assembly, including tubing string 14 disposed inside wellbore 12 of formation 10. *Id.* at 6:11–15.

Packers 20d, 20e, and 20f mount at different positions along the axis of tubing string 14. *See id.* at 6:17–19; Fig. 1b. The packers used are solid-body type packers having at least one extrudable packing element. *Id.* at 6:33–34. At ported intervals 16c, 16d, and 16e, ports 17 (not labeled in Figure 1b) open through tubing string 14. *Id.* at 6:13–16. Ported interval 16c sits above packer 20d, ported interval 16d sits between packers 20d and 20e, and ported interval 16e sits between packers 20e and 20f. *See id.* at 6:20–22, Fig. 1b.

Sliding sleeves 26c, 26d, and 26e are positioned inside tubing string 14 to regulate opening of ports 17. *Id.* at 6:44–45. Sliding sleeves 26c, 26d, and 26e mount over ports 17 of ported intervals 16c, 16d, and 16e, respectively, to close ports 17. *See id.* at 6:45–47. Each of sliding sleeves 26c, 26d, and 26e can be moved to a position away from ports 17 to open them. *Id.* at 6:49–56. In one embodiment, a ball or plug may actuate a sliding sleeve from the closed state to an open state. Ball 24e can travel through tubing string 14 and seat in sleeve 22e. *Id.* at 7:1–21. For example, ball 24e can travel through tubing string 14 and seat in sliding sleeve 26e. *Id.* at 7:4–16. Subsequently, pressure applied inside tubing string 14 can move ball 24e and sliding sleeve 26e to open ports 17 of ported interval 16e, as shown in Figure 1b. *Id.* at 7:4–18. This allows fluid flow between the inside and the outside of tubing string 14 through ports 17. *Id.* at 7:18–21. Other balls can be used to move the other sliding sleeves in sequence, so as to allow sequential treatment of different zones within wellbore 12. *Id.* at 8:3–36. To facilitate sequential treatment, the ’501 patent discloses that:

> Each of the plurality of sliding sleeves has a different diameter seat and therefore each accept different sized balls. In

> particular, the lower-most sliding sleeve 22*e* has the smallest diameter D1 seat and accepts the smallest sized ball 24*e* and each sleeve that is progressively closer to surface has a larger seat.

Id. at 7:22–26.

B. Related Matters

The ’501 patent is involved in a concurrent district court action, *Rapid Completions LLC v. Baker Hughes Inc.*, No. 6:15-cv-00724 (E.D. Tex.). IPR2016-01380, Paper 5. Additionally, the ’501 patent has been challenged in IPR2017-01232 and IPR2017-01236.

C. The Challenged Claims

Of the challenged claims, claim 1 is independent, and claims 2–9 depend from claim 1. Claim 1 is reproduced below.

> 1. A method for fracturing a hydrocarbon-containing formation accessible through a wellbore, the method comprising:
>
> running a tubing string into an open hole and uncased, non-vertical section of the wellbore, the tubing string having a long axis and an inner bore and comprising:
>
> > a first port opened through a wall of the tubing string,
> >
> > a second port opened through the tubing string wall, the second port downhole from the first port along the long axis of the tubing string,
> >
> > a third port opened through the tubing string wall, the third port downhole from the second port along the long axis of the tubing string,
> >
> > a first sliding sleeve having a seat with a first diameter, the first sliding sleeve positioned relative to the first port and moveable relative to the first port between (i) a closed port position wherein fluid can pass the seat of the first sliding sleeve and flow downhole of the first sliding

sleeve and (ii) an open port position permitting fluid flow through the first port from the tubing string inner bore and sealing against fluid flow past the seat of the first sliding sleeve and downhole of the first sliding sleeve,

a second sliding sleeve having a seat with a second diameter smaller than the first diameter, the second sliding sleeve positioned relative to the second port and moveable relative to the second port between (i) a closed port position wherein fluid can pass the seat of the second sliding sleeve and flow downhole of the second sliding sleeve and (ii) an open port position permitting fluid flow through the second port from the tubing string inner bore and sealing against fluid flow past the seat of the second sliding sleeve and downhole of the second sliding sleeve,

a first solid body packer mounted on the tubing string to act in a position uphole from the first port along the long axis of the tubing string, the first solid body packer operable to seal about the tubing string and against a wellbore wall in the open hole and uncased, non-vertical section of the wellbore,

a second solid body packer mounted on the tubing string to act in a position between the first port and the second port along the long axis of the tubing string, the second solid body packer operable to seal about the tubing string and against the wellbore wall in the open hole and uncased, non-vertical section of the wellbore,

a third solid body packer mounted on the tubing string to act in a position offset from the second port along the long axis of the tubing string and on a side of the second port opposite the second solid body packer, the third solid body packer operable to seal about the tubing string and against the wellbore wall in the open hole and uncased, non-vertical section of the wellbore, and

a hydraulically actuated sliding sleeve in a position offset from the third solid body packer along the long axis of

the tubing string on a side of the third solid body packer opposite the second port, the hydraulically actuated sliding sleeve being positioned relative to the third port and moveable relative to the third port between (i) a closed port position in which the hydraulically actuated sliding sleeve covers the third port and (ii) an open port position in which the hydraulically actuated sliding sleeve exposes the third port to the tubing string inner bore to permit fluid flow through the third port from the tubing string inner bore,

wherein the tubing string is run into the wellbore with the first, second, and third solid body packers each in an unset position;

expanding radially outward the first, second, and third solid body packers until each of the first, second, and third solid body packers sets and seals against the wellbore wall in the open hole and uncased, non-vertical section of the wellbore,

wherein the first, second, and third solid body packers, when expanded, secure the tubing string in place in the wellbore and create a first annular wellbore segment between the first and second solid body packers, a second annular wellbore segment between the second and third solid body packers, and a third annular wellbore segment downhole of the third solid body packer,

wherein the first annular wellbore segment is substantially isolated from fluid communication with the second annular wellbore segment by the second solid body packer,

wherein the second annular wellbore segment is substantially isolated from fluid communication with the third wellbore segment by the third solid body packer, and

wherein the first, second, and third annular wellbore segments provide access to the hydrocarbon-containing formation along the wellbore wall in the open hole and uncased, non-vertical section of the wellbore;

> applying a first pressure within the tubing string inner bore such that the hydraulically actuated sliding sleeve moves from the closed port position to the open port position without the hydraulically actuated sliding sleeve engaging any fluid conveyed sealing device;
>
> conveying a fluid conveyed sealing device through the tubing string to pass through the first sliding sleeve and to land in and seal against the seat of the second sliding sleeve thereby moving the second sliding sleeve to the open port position and permitting fluid flow through the second port; and
>
> pumping fracturing fluid through the second port and into the second annular wellbore segment to fracture the hydrocarbon-containing formation.

Ex. 1001, 13:65–16:6.

D. The Pending Grounds

Claims 1–9 of the ’501 patent are challenged as allegedly unpatentable based on the following pending grounds:

Ground	References	Challenged Claim
§ 103	Thomson[5], Ellsworth[6], and Halliburton[7]	1–9
§ 103	Thomson, Ellsworth, and Halliburton[8]	1–9
§ 103	Thomson, Ellsworth, and Kammerer[9]	1–9

[5] D.W. Thomson et al., *Design and Installation of a Cost-Effective Completion System for Horizontal Chalk Wells Where Multiple Zones Require Acid Stimulation*, SPE (Society for Petroleum Engineering) 37482 (1997) (Ex. 1002).
[6] B. Ellsworth et al., *Production Control of Horizontal Wells in a Carbonate Reef Structure*, 1999 Canadian Institute of Mining, Metallurgy, and Petroleum Horizontal Well Conference (1999) (Ex. 1003).
[7] Halliburton, *Completion Products, Second Edition* (Ex. 1004).
[8] Petitioner asserts that “Ground 2 . . . combines these references differently.” 1380 Pet. 6–7.

Ground	References	Challenged Claim
§ 103	Lane-Wells[10], Ellsworth, Thomson, and Halliburton	1–9

Petitioner also relies on Declarations of Ali Daneshy, Ph.D.[11] (1380 Ex. 1005; 1380 Ex. 1034; 247 Ex. 1006). Patent Owner relies on Declarations of Harold E. McGowen III, PE. (1380 Ex. 2050; 1380 Ex. 2051; 1380 Ex. 2081; 1380 Ex. 2084; 247 Ex. 2050; 247 Ex. 2051; 247 Ex. 2081; 247 Ex. 2084).

III. ANALYSIS

A. Claim Construction

In an *inter partes* review, the Board interprets claim terms in an unexpired patent according to the broadest reasonable construction in light of the specification of the patent in which they appear. 37 C.F.R. § 42.100(b) (2017); *see In re Cuozzo Speed Techs., LLC*, 136 S. Ct. 2131, 2142–46 (2016).[12] Under that standard, and absent any special definitions,

---

[9] U.S. Patent No. 3,306,365 to Kammerer, iss. Feb. 28, 1967 (Ex. 1024).
[10] *Composite Catalog of Oil Field and Pipe Line Equipment 21st 1955–56 Edition*, World Oil, The Gulf Publishing Company (247 Ex. 1002).
[11] Patent Owner criticizes Dr. Daneshy's testimony, arguing that Dr. Daneshy did not know certain legal criteria associated with determining obviousness of the claimed invention. 1380 PO Resp. 26–29; 247 PO Resp. 29–32. We have given Dr. Daneshy's testimony appropriate weight in view of Patent Owner's arguments. For example, in our analysis, we do not rely on Dr. Daneshy's ultimate conclusions regarding obviousness, and we afford his testimony on underlying factual issues appropriate weight.
[12] The Office recently changed the claim construction standard used in *inter partes* review proceedings. 37 C.F.R. § 42.100(b) (2018). As stated in the Federal Register notice, however, the new rule applies only to petitions filed on or after November 13, 2018, and, therefore, does not impact this matter. *See* Changes to the Claim Construction Standard for Interpreting Claims in Trial Proceedings Before the Patent Trial and Appeal Board, 83 Fed. Reg.

we give claim terms their ordinary and customary meaning, as would be understood by one of ordinary skill in the art at the time of the invention. *See In re Translogic Tech., Inc.*, 504 F.3d 1249, 1257 (Fed. Cir. 2007). Any special definitions for claim terms must be set forth with reasonable clarity, deliberateness, and precision. *See In re Paulsen*, 30 F.3d 1475, 1480 (Fed. Cir. 1994).

Petitioner proposes constructions for certain claim terms. 1380 Pet. 25–28; 247 Pet. 27–30. Patent Owner also addresses the meaning of certain claim language. 1380 PO Resp. 3–6; 247 PO Resp. 2–5. For purposes of this decision, we need not construe expressly any claim language. *Vivid Techs., Inc. v. Am. Sci. & Eng'g, Inc.*, 200 F.3d 795, 803 (Fed. Cir. 1999) ("[O]nly those terms need be construed that are in controversy, and only to the extent necessary to resolve the controversy.").

B. Alleged Obviousness of Claims 1–9 over Thomson, Ellsworth, and Halliburton

Petitioner asserts that claims 1–9 would have been obvious over Thomson, Ellsworth, and Halliburton, citing record evidence. 1380 Pet. 30–60. Petitioner asserts that Thomson teaches an apparatus generally like that employed in the method of claim 1. *Id.*; *see also id.* at 1. Petitioner argues that it would have been obvious to modify Thomson's system to include a pump-open plug taught by Halliburton. *Id.* at 34–40. Petitioner argues that it also would have been obvious to use the resulting system in an open hole

---

51,340, 51,340 (Oct. 11, 2018) (stating "[t]his rule is effective on November 13, 2018 and applies to all IPR, PGR and CBM petitions filed on or after the effective date").

wellbore. *Id.* at 40–43. Petitioner asserts that such a combination of the prior art meets the limitations of claims 1–9. *Id.* at 43–60.

Patent Owner argues that Petitioner has not demonstrated that Halliburton qualifies as prior art. 1380 PO Resp. 49–52. Patent Owner also argues that claims 1–9 would not have been obvious for a number of reasons related to the factors identified in *Graham v. John Deere Co.*, 383 U.S. 1 (1966). 1380 PO Resp. 7–49, 52–62. Those factors include (1) the scope and content of the prior art, (2) differences between the prior art and the claims, (3) the level of ordinary skill in the art, and (4) secondary considerations, i.e., objective indicia of non-obviousness. 383 U.S. at 17–18. We turn now to the question of whether Halliburton qualifies as prior art, followed by a detailed discussions of the *Graham* factors and our conclusions regarding whether claims 1–9 would have been obvious.

1. Whether Halliburton Is Prior Art

The parties dispute whether Halliburton was sufficiently publicly accessible to qualify as a printed publication. Relevant to the question of Halliburton's public accessibility, Petitioner's evidence includes a declaration of Aileen Barr, who testifies that "I have been employed at Halliburton since 1980." Ex. 1004, 1 ¶ 2; 1380 Pet. 5–6. Ms. Barr testifies that Halliburton (the reference) "is marketing material describing, among other things, completion products offered for sale by Halliburton" (the company). *Id.* at 1 ¶ 4. Ms. Barr further testifies about the printing and distribution of Halliburton to customers. *Id.* at 1–2 ¶ 4. As further demonstration that Halliburton was prior art, Petitioner also argues that multiple patent application file histories include information disclosure

statements listing Halliburton (the reference) more than one year prior to the effective filing date of the '501 patent. 1380 Pet. 6 (citing Ex. 1027, 73–85, 126; Ex. 1018, 45–57, 176).

Patent Owner argues that Petitioner has not shown sufficiently indexing or distribution of Halliburton to establish public accessibility. 1380 PO Resp. 49–52. Patent Owner argues that the Barr Declaration does not indicate how Halliburton is stored or cataloged. *Id.* at 51. Patent Owner also asserts that the Barr Declaration does not provide sufficient evidence that Halliburton was "actually distributed and received by persons of ordinary skill in the art during the relevant time frame." *Id.* at 52. Rather, Patent Owner argues, the Barr Declaration is "filled with vague statements." *Id.*

In response, Petitioner maintains that Halliburton is prior art. 1380 Pet. Reply 25. Petitioner argues that Ms. Barr's testimony demonstrates that Halliburton (the reference) was accessible in at least some portion of 1997 to customers and potential customers based on standard practice of Halliburton (the company). *Id.* (citing Ex. 1004, 1–2 ¶ 4). Additionally, Petitioner reiterates its position that Halliburton (the reference) was cited more than a year before the effective filing date of the '501 patent in the file histories of multiple patent applications. *Id.* (citing Pet. 6). Petitioner emphasizes that one of these other citations of Halliburton (the reference) appears in the file wrapper of the patent application of an entity other than Halliburton or Patent Owner. *Id.*; 1380 Pet. 6 (citing Ex. 1018, 45–57, 176).

We find a preponderance of the evidence demonstrates public accessibility of Halliburton. Patent Owner's arguments fail to acknowledge important aspects of the evidence, while attacking others individually, rather than as a whole. For example, Patent Owner does not acknowledge the fundamental nature of the document: a catalog of oilfield completion products offered for sale, the catalog bearing a copyright date of 1997, with no indication of confidentiality or other restraints on its dissemination. Ex. 1004 5, 9 ("Halliburton Energy Services has excelled in oilfield services for over 75 years."), 155 ("© 1997 Halliburton Energy Services, Inc."). In fact, Halliburton states that '[t]hese catalogs are available from your local Halliburton representative or on our Internet Website at the Web address www.halliburton.com." *Id.* at 10. By its very nature, such a document is highly likely to have been distributed to persons interested and ordinarily skilled in the art. *See, e.g.*, *Nobel Biocare Servs. AG vs. Instradent USA, Inc.*, 903 F.3d 1365, 1377 (Fed. Cir. 2018) (Affirming public accessibility finding for type of document intended for public dissemination with no indication otherwise).

Consistent with this, Ms. Barr's Declaration includes the unrebutted testimony that "Halliburton, as a regular practice and in the normal course of its business, prints these types of product catalogs every few years, including the 1997 Catalog, and disseminates them to customers and/or potential customers from the year they are printed until the next edition is printed." Ex. 1004, 1–2 ¶ 4. Ms. Barr further testifies regarding the details of the regular business practices that were used to disseminate Halliburton. *Id.* Additionally, the citation of Halliburton (the reference) in the file histories

of multiple patent applications prosecuted by multiple entities corroborates Ms. Barr's testimony, as well as independently evincing that Halliburton (the reference) was publicly accessible. *See* Ex. 1027, 73–85, 126; Ex. 1018, 45–57, 176; 1380 Pet. 6. Overall, we find the evidence demonstrates that Halliburton was publicly accessible and disseminated to persons interested and ordinarily skilled in the art as part of the regular business practices of Halliburton (the company).

2. *Scope and Content of the Prior Art*

a. *Thomson*

Thomson discloses a "completion design that allows multiple acid fracs to be performed in horizontal subsea chalk-formation wells with a single trip into the wellbore." Ex. 1002, 1. Thomson's "project was initiated to develop a system that would allow multiple acid stimulations to be efficiently performed in the shortest possible time." *Id.* "The key element" of Thomson's system "is a multi-stage acid frac tool (MSAF) that is similar to a sliding sleeve circulating device and is run in the closed position." *Id.* Thomson's Figure 5, below, depicts the MSAF tool in cross-section.

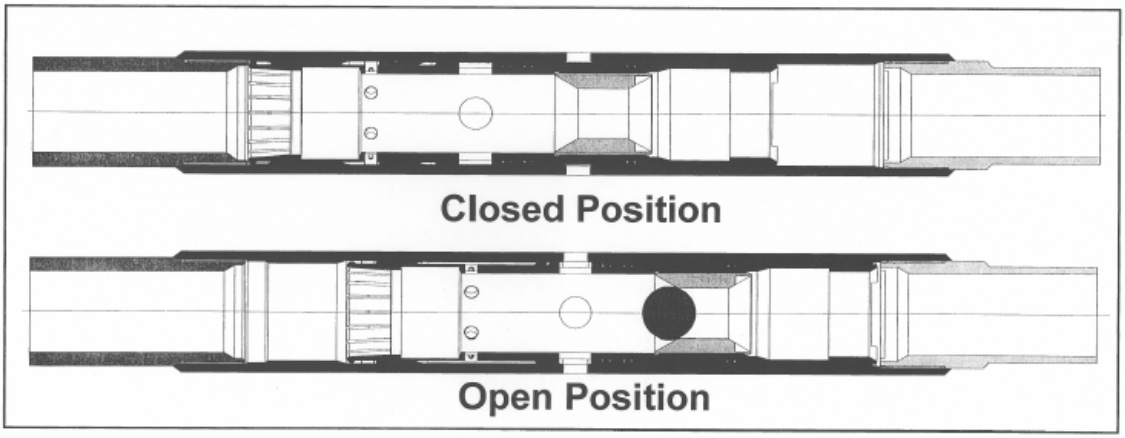

Figure 5
MSAF Tool in the Closed and Open Positions

Thomson's Figure 5, reproduced above, depicts in the upper illustration labeled "Closed Position," the MSAF tool having a sliding sleeve covering fluid ports in the closed position, and in the lower illustration, labeled "Open Position," the sliding sleeve having been moved by a ball into an open position uncovering the fluid ports. *Id.* at 2, 12.

Thomson discloses that hydraulic-set retrievable packers may be positioned on each side of an MSAF tool. *Id.* at 1. Thomson shows an MSAF tool disposed between two packers in Figure 3, which is reproduced below.

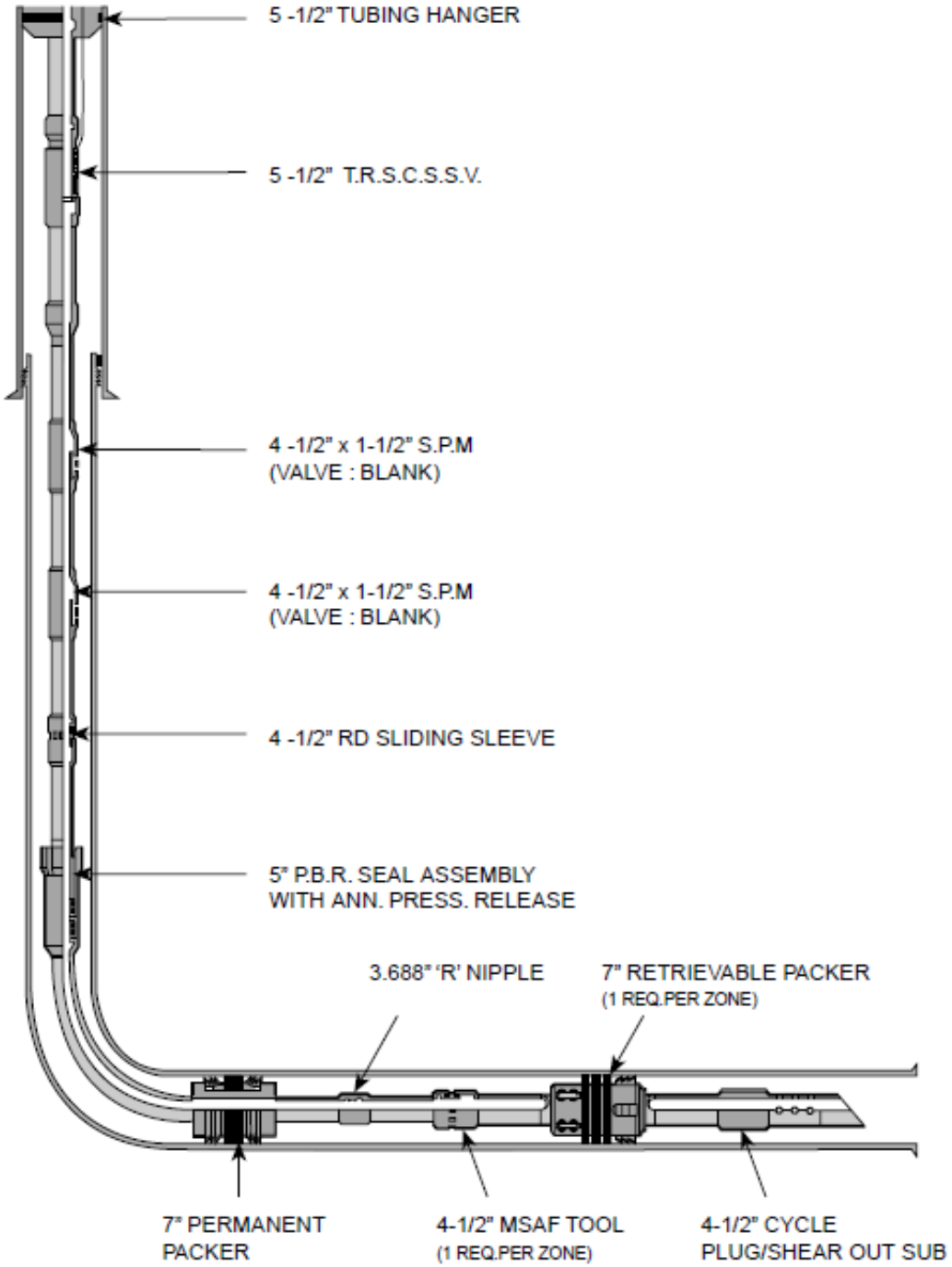

Fig. 3 — Schematic of a Typical Joanne Completion

Thomson's Figure 3 shows "[a s]chematic of a [t]ypical Joanne [c]ompletion." *Id.* at 2. Figure 3 shows one MSAF tool disposed between two packers. *Id.* at 2, Fig. 3. Thomson discloses that more MSAF tools can be used, stating that "[u]p to 9 MSAF tools can be run in the completion with isolation of each zone being achieved by hydraulic-set retrievable packers that are positioned on each side of an MSAF tool." *Id.* at 1. To illustrate an example of Thomson's disclosure of using multiple MSAF tools, each isolated in a zone by adjacent hydraulic-set retrievable packers, Petitioner provides the following modified, annotated version of Thomson's Figure 3. 1380 Pet. 32.

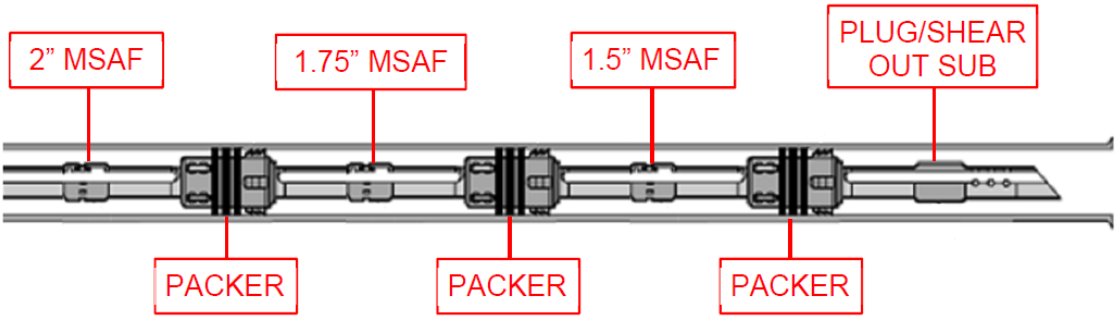

Modified Figure 3
(annotated)

Petitioner's modified, annotated version of Figure 3 shows three MSAF tools and three packers mounted in alternating positions along a tubing string. *Id.* Apparently using the dimensions from table 1 of Thomson, the annotated, modified Figure 3 identifies the first (leftmost) MSAF tool as having a 2" dimension, the next MSAF tool as having a 1.75" dimension, and the next MSAF tool as having a 1.5" dimension. *Id.* This comports with Thomson's disclosure that "[e]ach sleeve contains a threaded ball seat

with the smallest ball seat in the lowest sleeve and the largest ball seat in the highest sleeve." Ex. 1002, 1.

For each well, Thomson discloses running its apparatus into the well in one trip, after perforating the well with tubing-conveyed perforating guns. *Id.* at 3. Thomson discloses subsequently setting the packers of the apparatus and stimulating the well. *Id.* Thomson discloses that:

> [w]ith this system, stimulation of 10 separate zones is accomplished in 12–18 hours by a unique procedure that lubricates varying sized low-specific gravity balls into the tubing and then pumps them to a mating seat in the appropriate MSAF, thus sealing off the stimulated zone and allowing stimulation of the next zone which is made accessible by opening the sleeve.

Id. at 1. Based on these express disclosures, we find that Thomson teaches multistage fracturing of a wellbore.

b. *Ellsworth*

Ellsworth discusses challenges in providing isolation in mostly open hole horizontal completions. Ex. 1003, 1. Ellsworth "presents several well case histories that illustrate the application of advancements in establishing isolation in the open hole horizontal completions to accomplish various objectives in the successful application of horizontal wells." *Id.* Noting prior use of inflatable packers for isolation, Ellsworth discloses that "[m]ore recently, solid body packers (SBP's) (see Figure 4) have been used to establish open hole isolation." *Id.* at 3. Ellsworth's Figure 4 is reproduced below.

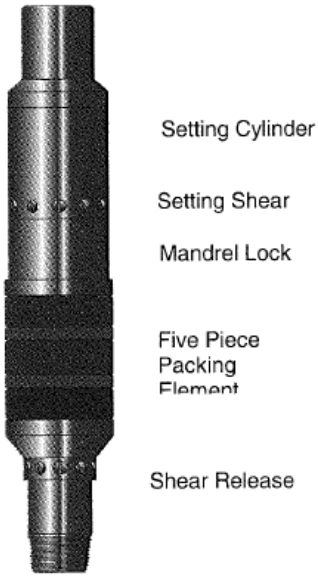

Figure 4 - The solid body packer is hydraulic set instead of inflatable (Guiberson / Halliburton Wizard II packer shown)

Figure 4, above, shows a solid body packer, including a setting cylinder, a setting shear, a mandrel lock, a five piece packing element, and a sheer release. *Id.*, Fig. 4. Ellsworth teaches that a solid body packer provides a hydraulically actuated mechanical packing element. *Id.* at 3. Ellsworth explains that "[t]he objective of using this type of tool is to provide a long-term solution to open hole isolation without the aid of cemented liners." *Id.* Reporting the results of one installation of solid body packers in an open hole wellbore, Ellsworth states that "[t]he initial acid job using [solid body packers] indicated that the tools successfully provided isolation during the job." *Id.* at 6. Reporting on another installation, Ellsworth discloses that "mechanical confirmation indicated that the [solid body packers] were holding" and that "[p]roduction testing afterwards, as well as sleeve changes during the first 6 months indicated that successful isolation was achieved."

Id. at 8. Regarding another installation, Ellsworth reports that "zonal segmentation in the build section of this well was clearly demonstrated." *Id.* In summarizing its disclosure, Ellsworth states that "[t]he ability to establish long-term zonal isolation in open hole producers opens the door to many new well producing configurations. The goal of cost effective use of horizontals can be enhanced with the ability to segment, and control production without the need to run and cement liners." *Id.*

c. *Halliburton*

Halliburton discloses a pump open plug that "is a positive plug that holds pressure from either direction but can be pumped open by applying excess surface pressure." Ex. 1004, 96. Halliburton shows this in a drawing labeled "Halliburton Pump Open Plug," reproduced below. *Id.*

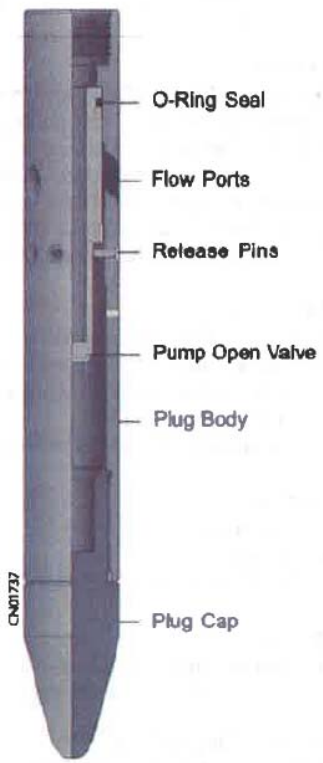

Halliburton Pump Open Plug

Halliburton's "Pump Open Plug" drawing shows various features of the pump open plug, including a plug body, a plug cap, a pump open valve, flow ports, a pump open valve, release pins, and an o-ring seal. *Id.*

3. *Differences Between the Prior Art and the Claimed Invention*

Petitioner contends that Thomson teaches nearly every limitation of the challenged claims. 1380 Pet. 30–34, 43–60. Petitioner does not allege, however, that Thomson teaches the claims' limitations regarding performing the method in an open hole wellbore, such as claim 1's limitation of "running a tubing string into an open hole and uncased, non-vertical section of the wellbore." *See, e.g.*, *id.* at 40–44. Additionally, Petitioner does not assert that Thomson teaches the claims' limitations regarding the "third port" (Ex. 1001, 14:8–10) and the associated "hydraulically actuated sliding sleeve" (*id.* at 14:55–67, 15:29–33) (emphasis omitted). *See, e.g.*, 1380 Pet. 30–40, 45, 51–52, 54–55. Patent Owner does not dispute Petitioner's characterization of which claim limitations Thomson teaches. *See* 1380 PO Resp., generally.

In view of the parties' evidence and explanation, we find that the differences between Thomson and the challenged claims are limited to (1) Thomson does not teach performing the fracturing in an open hole section of a wellbore, and (2) the plug at the end of Thomson's tubing string differs from the claimed "third port" and associated "hydraulically actuated sliding sleeve." *See, e.g.*, 1380 Pet. 30–60. Petitioner addresses these differences by asserting that it would have been obvious to (1) use Thomson's apparatus in an open hole wellbore, and (2) replace Thomson's pump-out plug with Halliburton's pump-open plug. *Id.* at 34–45, 51–52. Modifying Thomson's teachings in such a manner would have produced every limitation of the

challenged claims, Petitioner asserts. *Id.* at 43–60. Patent Owner does not dispute Petitioner's assertions that the proposed modifications would have satisfied every limitation of the challenged claims. *See* 1380 PO Resp., generally.

Having reviewed each of the references and the associated evidence provided by the parties pertaining to the respective disclosure of each reference, we find that although Thomson, Ellsworth, and Halliburton do not individually disclose all the limitations of claims 1–9, each of the limitations of claims 1–9 is taught by at least one of Thomson, Ellsworth, and Halliburton. Additionally, we find that the claimed invention would have resulted from combining the teachings of the references in the manner that Petitioner asserts would have been obvious. *See, e.g.*, 1380 Pet 30–60.

4. *Level of Ordinary Skill in the Art*

"Section 103(a) forbids issuance of a patent when 'the differences between the subject matter sought to be patented and the prior art are such that the subject matter as a whole would have been obvious at the time the invention was made to a person having ordinary skill in the art to which said subject matter pertains.'" *KSR Int'l Co. v. Teleflex Inc.,* 550 U.S. 398, 406 (2007).

a. The Parties' Contentions

Petitioner asserts that a person of ordinary skill in the art as of November 19, 2001 "would have had at least a Bachelor of Science degree in mechanical, petroleum, or chemical engineering and at least 2-3 years of experience with downhole completion technologies related to fracturing." 1380 Pet. 15 (citing Ex. 1005 ¶ 44). Petitioner adds that "a [person of ordinary skill in the art] would have been familiar with various completion

systems and stimulation techniques." *Id.* at 16 (citing Ex. 1005 ¶¶ 44–53). According to Petitioner, the knowledge of various completion systems and stimulation techniques would have included knowledge of using packers to isolate different zones of a wellbore for selective stimulation, citing, as one example, Hutchinson.[13] *See id.* at 8–13, 15–16 ("Here, the prior art described in Section V above demonstrates that a [person of ordinary skill in the art] would have been familiar with various completion systems and stimulation techniques.").

Petitioner further asserts that a person of ordinary skill in the art would have recognized hydraulically set solid body packers as preferable to cup type and inflatable packers in cased and open hole wells in at least some circumstances. *Id.* at 16 (citing Ex. 1005 ¶¶ 41–42, 45, 52; Ex. 1003, 3; Ex. 1010, 3:67–4:4). Petitioner argues that a person of ordinary skill in the art would have understood that components initially designed for or used in cased wellbores could work in open hole wellbores in at least some formations. *Id.* at 16–17 (citing Ex. 1005 ¶¶ 42, 47–53; Ex. 1003, 5, 6; Ex. 1022, 3:6–10; Ex. 1023, 912, Fig. 1). Indeed, Petitioner asserts that Patent Owner recognizes as much, citing statements made by Kevin Trahan, Patent Owner's expert witness in another proceeding. *Id.* at 17–18 (citing Ex. 1011, 21, 27; Ex. 1028, 18–19, 34; Ex. 1003, 3).

Patent Owner does not dispute the Petition's assertion that a person of ordinary skill in the art "would have had at least a Bachelor of Science degree in mechanical, petroleum, or chemical engineering and at least 2–3 years of experience with downhole completion technologies related to

[13] U.S. Patent No. 4,099,563 iss. July 11, 1978 (Ex. 1010).

fracturing." 1380 PO Resp. 8. Nor does Patent Owner dispute that a person of ordinary skill in the art would have been aware of different completion techniques, such as open hole and cased well completions. *See id.* at 8–12.

Patent Owner, however, suggests that the Petition presents an incomplete description of the level of skill in the art. Patent Owner argues that "[p]reparing a wellbore for oil or gas production can be significantly more complicated than simply drilling a hole in the ground." *Id.* at 9.

Relying on declaration testimony of Mr. McGowen and certain deposition testimony of Dr. Daneshy, Patent Owner contends that a person of ordinary skill in the art would have *only* considered cemented casing completion when planning to use multi-stage hydraulic fracturing to stimulate oil and gas production. *Id.* at 12–16 (citing Ex. 2050, 14, 22–25, 40; Ex. 2016, 28:24–31:3; Ex. 2011, 4; Ex. 2085, 89:11–22). Mr. McGowen testifies that:

> [a]s of 2001, the industry accepted method for constructing a hydraulically fractured horizontal well consisted of drilling a horizontal borehole, running casing into that horizontal borehole, cementing the casing in place, perforating a section of the horizontal borehole that the operator desired to hydraulically fracture, hydraulically fracturing that perforated interval, and then repeating the plug/perforate/fracture cycle for each section that the operator desired to hydraulically fracture (the "Plug and Perf" method).

Ex. 2050, 22. Mr. McGowen explains that:

> [f]or horizontal stage fracturing, it was thought that issues such as fracture spacing, tortuosity (high pump back pressure due to friction at the fracture initiation point) due to the fracture leaving the wellbore and rapidly changing direction and multiple complex fractures being initiated near the wellbore, could be better controlled through the precise placement of

> perforations, which requires cementing, perforating and the Plug and Perf method.

Id. at 23. In support of his testimony, Mr. McGowen quotes the disclosure in Emanuele[14] that "[u]nfavorable fracture initiation may cause problems with both fracture execution (screen-out) and with production response, by harming the wellbore-to-fracture connection." Ex. 2042, 9–10; Ex. 2050, 23. Mr. McGowen further asserts that it was believed multiple fractures too close together created complex fracture geometries or tortuosity near the wellbore, resulting in problems with fracturing. Ex. 2050, 25. Citing Crosby[15], Mr. McGowen testifies that "[m]any operators thought that the way to minimize fracture tortuosity was to control the fracture initiation process through the use of decreased perforation density . . . . Once again, this approach requires the use of cemented casing and precisely located perforations." *Id.* (citing Ex. 2039).

Arguing that a person of ordinary skill in the art would have viewed plug and perf fracturing as "critical to ensure that fractures are properly spaced" (1380 PO Resp. 14–15), Patent Owner cites Dr. Daneshy's testimony that:

> [i]f you put a fracture at plus 10 (which is 10 feet from that packer, on one side of it) and minus 10 (which is 10 feet from the packer on the other side of it), these two packers are 20 feet apart from each other. They basically drain the same segment of the well. You are not getting as much benefit from this as

---

[14] M. A. Emanuele, et al., *A Case History: Completion and Stimulation of Horizontal Wells with Multiple Transverse Hydraulic Fractures in the Lost Hills Diatomite*, Chevron U.S.A. Production Company, 1998 (Ex. 2042).
[15] D.G. Crosby et al., *Methodology to Predict the Initiation of Multiple Transverse Fractures from Horizontal Wellbores*, University of New South Wales, 2001, (Ex. 2039).

> the case when the fracture is in the 100 feet from the packer on one side and 100 feet from the packer on the other side. Now you are draining 200 feet from them, and draining 200 feet from them gives you more production than only draining 20 feet.

Ex. 2016, 30:6–16. Patent Owner contends that "[t]his could cause a significant loss of production from the well." 1380 PO Resp. 15 (citing Ex. 2016, 30:17–31:3; Ex. 2050, 23–25).

Based on these assertions and evidence, Patent Owner contends that using cemented casing with plug and perf fracturing was the accepted way to do multi-stage fracturing efficiently and effectively in horizontal wells. *Id.* at 12–16. Indeed, Patent Owner asserts that a person of ordinary skill in the art would have believed that multistage hydraulic fracturing required cemented casing and plug and perf. *Id.* at 12.

Patent Owner also identifies certain other factors that allegedly would have informed the thinking of a person of ordinary skill in the art. Patent Owner contends that a person of ordinary skill in the art would have considered not only ways to save money in completing a well, but associated mechanical and economic risks. 1380 PO Resp. 16–18. Patent Owner contends that a person of ordinary skill in the art would have viewed Thomson's apparatus as risky, citing Mr. McGowen's testimony regarding certain challenges discussed in Thomson. *Id.* at 44–45 (citing Ex. 2050, 28). Mr. McGowen testifies, for example, that "[Thomson] attempts to put a positive spin on these events in the conclusions, but only completing 80% of the stages in a well (particularly a well in the North Sea) more than likely meant that millions of dollars in reserves were lost due to these failures." Ex. 2050, 28. Consequently, Patent Owner asserts that "[t]o the extent a [person of ordinary skill in the art] attempted to use Thomson's system at

all, it is unlikely that the [person of ordinary skill in the art] would introduce new risks to the system by modifying the system in ways not contemplated by Thomson." *Id.* at 45 (citing Ex. 2050, 28).

Petitioner responds that a person of ordinary skill in the art would not have thought cemented casing was required for multistage fracturing of a horizontal wellbore. 1380 Pet. Reply 7–10. Petitioner notes that, when deposed, Mr. McGowen admitted that "going *without* cemented casing would have been an option to consider." Ex. 1033, 75:25–76:2 (emphasis added); 1380 Pet. Reply 7. Petitioner further argues that:

> [Mr. McGowen] also conceded [open hole multistage] fracturing had already occurred. [Ex. 1033, 75:25–79:4]. [Figure 1 of Coon[16]] shows such an [open hole multistage] system, which gave "the option of acid or low-volume sand fracturing." [Ex. 1023, 14].

1380 Pet. Reply 7.

Petitioner also argues that Mr. McGowen does not support adequately his testimony that a person of ordinary skill in the art would have believed cemented casing necessary to avoid fracture tortuosity adjacent a wellbore. 1380 Pet. Reply 9–10. For example, Petitioner notes that, contrary to Mr. McGowen's suggestion, Emanuele does not support the testimony that a person of ordinary skill in the art would have believed cemented casing necessary to avoid the undesirable fracturing discussed in Emanuele. *Id.* at 10; *see* Ex. 2050, 23. Petitioner explains that Emanuele expresses concerns about undesirable fracturing that occurred in cemented and cased

[16] Robert Coon and Doug Murray, *Single-Trip Completion Concept Replaces Multiple Packers and Sliding Sleeves in Selective Multi-Zone Production and Stimulation Operations*, Society of Petroleum Engineers, 1995 (Ex. 1023).

wells, not open hole wells. 1380 Pet. Reply (citing Ex. 2042, 10–11, 3–4; Ex. 1034 ¶¶ 24–26).

Indeed, Petitioner argues that a person of ordinary skill in the art would have understood that undesirable fracturing like that described in Emanuele arose from fracturing through misaligned perforations in casing. *Id.* at 9. Petitioner also argues that a person of ordinary skill in the art would have understood that open hole fracturing would cause as much problem as cased-hole fracturing. *Id.* at 9–10. Petitioner asserts, for example, that Venditto[17] observed that open hole fractures tend to align naturally with the direction of fracture propagation. *Id.* at 10 (citing Ex. 1036, 6:29–41; Ex. 1034 ¶ 34). Petitioner argues that a person of ordinary skill in the art would have gravitated toward open hole fracturing to avoid tortuosity. *Id.* (citing Ex. 1034 ¶ 35).

Petitioner also disputes Patent Owner's contention that a person of ordinary skill in the art would have viewed it as too risky to use Thomson's apparatus without a cemented a wellbore. 1380 Pet. Reply 11–12. Petitioner argues that the challenges discussed in Thomson that Mr. McGowen characterized as risks were not uncommon for the industry. *Id.* at 11 (citing Ex. 1034 ¶¶ 4–15; Ex. 1033, 58:11–59:6). Petitioner further argues that Patent Owner's evidence reflects that using cemented casing with plug and perf posed risks. *Id.* (citing Ex. 2004, 1–2; Ex. 2001, 3). Petitioner also argues that in his deposition, Mr. McGowen retreated from his declaration that the challenges discussed in Thomson likely resulted in

[17] U.S. Patent No. 5,360,066, iss. Nov. 1, 1994 (Ex. 1036).

the loss of hydrocarbon reserves. *Id.* at 11–12 (citing Ex. 1033, 60:2–61:6, 34:3–39:10, 41:21–24, 44:22–48:14).

b. Analysis of LOSITA as to Multi-Stage Fracturing in Open Holes Versus Cemented, Cased Holes

Petitioner persuades us that a person of ordinary skill in the art would have had at least a Bachelor of Science degree in mechanical, petroleum, or chemical engineering, along with at least 2–3 years of experience with downhole completion technologies related to fracturing. 1380 Pet. 15–16; Ex. 1005 ¶¶ 44–53. Additionally, Petitioner persuades us that a person of ordinary skill in the art would have been familiar with various completion systems and stimulation techniques, including the use of packers for isolation and the option to use successfully solid body packers designed for cased wellbores in at least some open hole wellbores. 1380 Pet. 8–12, 40–43; Ex. 1003, 3; Ex. 1005 ¶¶ 31–52, 83–87; Ex. 1008; Ex. 1010, 3:67–4:4, 4:35–42; Ex. 1028, 18–19, 27.

Additionally, Petitioner persuades us that, contrary to Patent Owner's suggestion, it would not have been accepted wisdom for a person of ordinary skill in the art to believe that every multistage fracturing stimulation in a horizontal well required a cemented wellbore. Patent Owner's evidence persuades us that cementing a wellbore was a popular approach for multistage fracturing. *See, e.g.,* Ex. 2079, 1; Ex. 2050, 23–25. But Mr. McGowen acknowledges, and Patent Owner does not dispute, that open hole multistage fracturing had been done and was a known technique to those of ordinary skill in the art. For example, Patent Owner does not dispute Petitioner's observation that Coon discloses open hole multistage fracturing. 1380 Pet. Reply 7; Ex. 1023, 14. Indeed, prior to discussing the different

applications (including open hole and cased, cemented hole) of multistage completion equipment, Coon notes that "[c]urrent options are outlined below. Each has its own merits and limitations." Ex. 1023, 12. In other words, Coon indicates that multistage fracturing in open holes and in cased, cemented holes both have merits and limitations.[18]

In combination with this, Mr. McGowen's admission that omitting cemented casing "would have been an option to consider" refutes Patent Owner's position. Ex. 1033, 75:25–76:2. Mr. McGowen elaborated that he believed the general direction in the field at the time was moving away from the simpler approach of open hole fracturing to developing more complicated methods to control fracture initiation. *Id.* at 76:2–76:18. But that does not support Patent Owner's contention that a person of ordinary skill in the art would have viewed a cemented liner as necessary for multistage fracturing in a horizontal well. *See* 1380 PO Resp. 12–16.

The foregoing documentary evidence and Mr. McGowen's deposition admission demonstrate that the portion of Damgaard[19] cited by Patent Owner overstates the perceived importance of cementing a wellbore during the period preceding Patent Owner's alleged invention. *See* Ex. 1023, 13–14; Ex. 1030, 75:25–76:2; Ex. 1034 ¶¶ 42–45; Ex. 2079, 1. Additionally, as

---

[18] Indeed, Coon suggests doing "acid or low volume sand fracturing" in an open hole (*id.* at 14), which Mr. McGowen admits is the type of stimulation disclosed in Thomson, i.e., stimulation at relatively low pressures. Ex. 2034, 29. Thus, it appears that Thomson's stimulation likely presented a particularly suitable candidate for open hole execution.

[19] A.P. Damgaard, et. al., *A Unique Method for Perforating, Fracturing, and Completing Horizontal Wells*, Society of Petroleum Engineers, Feb. 1992 (Ex. 2079).

Petitioner notes, the *Encyclopedia of Hydrocarbons*, which bears a 2007 copyright notice, does not speak to the period preceding Patent Owner's application for patent. *See, e.g.*, 1380 Pet. Reply 15; Ex. 2002, 190. Likewise, when Dr. Daneshy discussed fracture spacing in his deposition (taken in 2016), neither the questions nor Dr. Daneshy's answers addressed what a person of ordinary skill in the art would have known in the timeframe preceding Patent Owner's application for patent. *See, e.g.,* 1380 Pet. Reply 8; Ex. 2016, 28:24–31:3. Furthermore, as explained above, Emanuele and Crosby do not support Mr. McGowen's testimony about the perceived problems with fracture initiation, and Mr. McGowen cites no other contemporaneous supporting evidence. *See* Ex. 2050, 23–25. The evidence considered as a whole demonstrates that, at the time preceding Patent Owner's application for patent, it was not accepted wisdom that multistage fracturing required cementing a wellbore, at least not for all circumstances.

Additionally, the evidence as a whole persuades us that, contrary to Patent Owner's assertion, a person of ordinary skill in the art would not have viewed Thomson's apparatus, or using it to perform multistage fracturing without a cemented wellbore, as excessively risky. Mr. McGowen cites portions of Thomson discussing certain things that occurred during its fracturing operations, including Thomson's disclosure that "eight zones out of the original ten were stimulated." Ex. 1002, 4; Ex. 2050, 28. Noting that "[Thomson] attempts to put a positive spin on these events in the conclusions," Mr. McGowen testifies that "only completing 80% of the stages in a well (particularly a well in the North Sea) more than likely meant that millions of dollars in reserves were lost due to these failures." Ex.

2050, 28. When asked to elaborate on whether the alleged risks of Thomson would outweigh its economic rewards, however, Mr. McGowen could only offer that "[t]here's insufficient data in Thomson for anyone to figure that out." Ex. 1033, 60:2–7. Given the admitted lack of specific economic data in Thomson, as well as the absence of any supporting evidence for Mr. McGowen's estimate, we give limited weight to Mr. McGowen's assertion that millions of dollars in reserves likely were lost.

On the whole, the evidence also persuades us that a person of ordinary skill in the art would not have had reason to view Thomson's apparatus as excessively risky in other respects. Patent Owner refers to risk of "death and economic and environmental disaster," citing Mr. McGowen's declaration testimony about "the Deepwater Horizon/Macondo incident." 1380 PO Resp. 17 (citing Ex. 2050, 18). But Patent Owner does not advance any evidence or reasoning that using Thomson's apparatus in a cemented or open wellbore would have presented any greater risk of such a result than other wellbore completions.

More generally, Mr. McGowen characterizes Thomson's discussion of certain obstacles that presented themselves during stimulation as "alarming." Ex. 2050, 28. Dr. Daneshy does not agree. *See* Ex. 1034 ¶¶ 4–23. Dr. Daneshy testifies that issues like these commonly present themselves, even with well-proven systems and tools. Ex. 1031 ¶ 15. Dr. Daneshy explains that Thomson's discussion of these issues reflects a proactive preparedness to overcome such issues to implement successfully a new system. *Id.* at ¶ 14. Consistent with this, Thomson amply conveys that the challenges presented were overcome sufficiently, and that its apparatus

proved very successful for stimulating wells. Thomson provides the following conclusions regarding use of its apparatus:

> The successful installation of four multiple packer/MSAF completions in chalk formation in the North Sea proved that the system was not only feasible but highly efficient, both from an operational standpoint and from a reservoir treatment standpoint, since the stimulations could be designed and matched to the requirements of each reservoir zone. This ensured that the most cost efficient treatments possible were applied and that there would be no compromise to the effectiveness of the procedures to enhance production. Also, since this completion technique substantially reduces operational time normally required to stimulate multiple zones, cost savings are realized from the time reduction. As more experience is obtained with the system, increased efficiency will undoubtedly be generated, allowing additional time reduction and even greater cost savings when compared to traditional stimulation procedures.

Ex. 1002, 5.

Consistent with this positive assessment of the apparatus, Thomson indicates that its apparatus successfully stimulated every well, with only a small fraction of one well ultimately unstimulated. *Id.* at 3–4. Thomson discloses that "[a]fter the successful installation of the seven-packer completion in M1 [(the first well)], it was decided to attempt maximization of the number of zones for the next three wells." *Id.* Thomson indicates that in the next "two wells with ten packers/nine MSAF tools, M5 and M4, the completions were completed without incident." *Id.* at 4. Regarding the final well, "M3," Thomson states that "eight zones out of the original ten were stimulated, and the well was salvaged." *Id.* Thus, out of dozens of well segments, all but two were stimulated successfully. In view of this, absent more compelling supporting evidence, we find unpersuasive Mr.

McGowen's suggestion that a person of ordinary skill in the art would have doubted the merits of Thomson's apparatus. *See* Ex. 2050, 28; Ex. 1033, 60:2–61:6, 34:3–39:10, 41:21–24, 44:22–48:14.

Regarding the allegedly perceived risks of undesirable and/or ineffective fracturing as a result of using Thomson's apparatus without cementing and performing plug and perf, we find the evidence supports Petitioner's position more so than Patent Owner's. As evidence of concern about undesirable fracture initiation, Mr. McGowen cites Emanuele's statement that "[u]nfavorable fracture initiation may cause problems with both fracture execution (screen-out) and with production response, by harming the wellbore-to-fracture connection." Ex. 2042, 9–10; Ex. 2050, 23. Therefore, Mr. McGowen testifies, cemented wellbores and plug and perf were viewed as necessary because "[u]npredictable results generated by complex fracture geometry near the wellbore was considered to be problematic." Ex. 2050, 23. As Petitioner explains, however, Emanuele discusses unfavorable fracture initiation that occurred in completions using cemented wells with plug and perf. Ex. 2042, 3–4, 10–11; Ex. 1034 ¶¶ 24–28; 1380 Pet. Reply 10. Consequently, we find that Emanuele does little to support the contention that a person of ordinary skill in the art would have viewed it as necessary to cement and plug and perf every well to avoid undesirable fracture initiation. Indeed, Petitioner persuades us that a person of ordinary skill in the art would have understood that in at least some circumstances, fracturing in an open hole wellbore can avoid fracture problems caused by cementing and using plug and perf. 1380 Pet. Reply 9–10; Ex. 1034 ¶¶ 31–36; Ex. 1036, 4:9–33, 4:53–55, 5:4–41, 5:46–56, 6:29–

41; Ex. 1037, 1:62–2:4; Ex. 1038, 3:18–20, 3:23–31. On the whole, the evidence demonstrates that at a person of ordinary skill in the art would have viewed the likelihood of successfully using Thomson's apparatus in an open hole wellbore to be at least as great as the likelihood of successfully using the apparatus in a cemented wellbore.

5. *Whether There Would Have Been Reason to Combine Prior Art*

The Supreme Court instructs an expansive and flexible approach in determining whether a patented invention was obvious at the time it was made. *See KSR*, 550 U.S. at 415. The existence of a reason for a person of ordinary skill in the art to modify a prior art reference is a question of fact. *See In re Constr. Equip. Co.*, 665 F.3d 1254, 1255 (Fed. Cir. 2011). In an obviousness analysis, some reason must be shown as to why a person of ordinary skill would have combined or modified the prior art to achieve the patented invention. *See Innogenetics, N.V. v. Abbott Labs.*, 512 F.3d 1363, 1374 (Fed. Cir. 2008). A reason to combine or modify the prior art may be found explicitly or implicitly in market forces; design incentives; the "interrelated teachings of multiple patents"; "any need or problem known in the field of endeavor at the time of invention and addressed by the patent"; "and the background knowledge, creativity, and common sense of the person of ordinary skill." *Perfect Web Techs., Inc. v. InfoUSA, Inc.*, 587 F.3d 1324, 1328–29 (Fed. Cir. 2009) (quoting *KSR*, 550 U.S. at 418–21).

Petitioner argues that it would have been obvious to substitute "Halliburton's Pump Open Plug" for "Thomson's 'pump-out plug.'" 1380 Pet. 34. Noting that "Halliburton expressly states that its Pump Open Plug (like Thomson's) may be used 'to isolate perforations when run below [a] packer completion assembly'" (*id.*), Petitioner asserts that a person of

ordinary skill in the art would have understood that Halliburton's plug could be used in place of Thomson's, and would have operated in the same or similar manner (*id.* at 36). Petitioner asserts that Thomson provides explicit motivation to replace its plug with another to achieve more reliable operation. *Id.* at 37–39. Petitioner also argues that Halliburton's plug provides advantages that a person of ordinary skill in the art would have recognized. *Id.* at 39. Specifically, Petitioner notes that Halliburton's plug does not leave an expelled plug in the wellbore. *Id.* Additionally, Petitioner asserts that replacing Thomson's plug with Halliburton's constitutes a simple substitution of one known element for another, producing only predictable results. *Id.* at 40 (citing *KSR*, 550 U.S. at 417).

Petitioner further argues that "it would have been obvious to use such a modified version of Thomson's tubing string in an open hole." *Id.* at 40. Petitioner argues that Ellsworth teaches that solid body packers like Thomson's could be used in an open hole well. *Id.* at 40–41. Citing other evidence that in certain formations solid body packers would work in an open hole, Petitioner asserts that a person of ordinary skill in the art "would have had additional, independent reasons to expect success using solid body packers to stimulate open hole formations." *Id.* Citing Dr. Daneshy's testimony and Ellsworth, Petitioner also argues that a person of ordinary skill in the art "would have been motivated to use the modified Thomson system in an open hole section of wellbore to minimize the time and expense of completing a well." *Id.* at 42 (citing Ex. 1005 ¶ 83; Ex. 1003, 8). Petitioner further asserts that:

> Using the modified Thomson system in an uncased wellbore would have been a straightforward task for a [person of

> ordinary skill in the art] at that time (Ex. 1005 ¶¶ 53, 85-86), and would have yielded nothing more than predictable results to that person—*e.g.*, a well that could be selectively stimulated in zones (*id.*; *see also* Ex. 1022 at 3:6-10; Ex. 1011 at 18-19 & 34/57)—thus rendering the combination obvious.

Id. at 43 (citing *KSR*, 550 U.S. at 417).

There are two disputes regarding Petitioner's assertions that a person of ordinary skill in the art would have had reason to combine the prior art. There is a dispute regarding whether it would have been obvious to use Thomson's apparatus in an open hole wellbore. There is also a dispute regarding whether it would have been obvious to replace Thomson's tailpipe plug with Halliburton's plug. We discuss each of these disputes in more detail below.

a. *Whether There Would Have Been Reason to Use Thomson's Apparatus in an Open Hole Wellbore*

Patent Owner argues that a person of ordinary skill in the art "would not have modified the prior art as proposed by" Petitioner. 1380 PO Resp. 56. Patent Owner offers several explanations for this. First, Patent Owner argues that Petitioner "improperly *assume*[*s*] that a [person of ordinary skill in the art] would have recognized that multi-stage open hole fracturing was even an option in the first place." *Id.* at 36. We find this argument unpersuasive. As noted above in Section III.B.4, Coon discloses open hole multistage fracturing (Ex. 1023, 14), and Mr. McGowen acknowledges that open hole fracturing "would have been an option to consider" (Ex. 1033, 75:25–76:2).

Patent Owner further argues that even if a person of ordinary skill in the art would have recognized the possibility of using Thomson's apparatus

in an open hole like that disclosed by Ellsworth, a person of ordinary skill in the art would not have used such an apparatus for fracture treatments. 1380 PO Resp. 38–39. In connection with this, Patent Owner reiterates that "conventional wisdom was that cemented casing was necessary to produce effective fractures" (*id.* at 37) and that Thomson contains "numerous indications" that its apparatus "had serious risks and expense problems" (*id.* at 38). For the reasons discussed above in Section III.B.4, the evidence persuades us that (1) the accepted wisdom of a person of ordinary skill in the art did not include believing that cementing a wellbore was necessary, and (2) the alleged risks of Thomson's apparatus would not have dissuaded a person of ordinary skill in the art.

On the whole, the evidence of record persuades us that a person of ordinary skill in the art would have had reason to use Thomson's apparatus in an open hole wellbore. We find that the option to save time and cost by not cementing a wellbore would have presented significant reason to use Thomson's apparatus in an open hole. *See, e.g.*, Ex. 1005 ¶¶ 48–50, 83; Ex. 1003, 9; Ex. 1002, 5. Indeed, Patent Owner does not dispute that saving time and cost would provide significant incentive to perform stimulation in an open hole wellbore. *See* 1380 PO Resp. 36. Instead, Patent Owner suggests that certain accepted wisdom and perceived risks would have dissuaded a person of ordinary skill in the art from using Thomson in an open hole wellbore. *See id.* at 36–39. For the reasons explained immediately above and in Section III.D.4, Petitioner persuades us to the contrary.

Moreover, Petitioner persuades us that a person of ordinary skill in the art would have had a reasonable expectation of success in using Thomson's apparatus in an open hole wellbore. Patent Owner does not dispute Petitioner's assertion that a person of ordinary skill in the art would have expected solid body packers to provide effective isolation in an open hole wellbore in at least some formations. *See* 1380 Pet. 16–18; 1380 PO Resp., generally; Ex. 1005 ¶¶ 41–42, 52; Ex. 1003, 3.

Additionally, Petitioner persuades us that a person of ordinary skill in the art would have had a reasonable expectation of success in stimulating an open hole wellbore using Thomson's apparatus. As discussed in Section III.B.4 above, Mr. McGowen cites Emanuele in support of his testimony that a person of ordinary skill in the art would have had concerns about undesirable fracturing. Ex. 2050, 23 (citing Ex. 2042). But as Petitioner notes, Emanuele discusses concerns arising even when using a cemented liner and stimulating a wellbore. Ex. 2042, 10–11, 3–4; Ex. 1034 ¶¶ 24–26; 1380 Pet. Reply 10. And Petitioner persuades us that a person of ordinary skill in the art would have recognized, as acknowledged in Venditto, that fracturing in an open hole can reduce or eliminate the type of undesirable fracturing discussed in Emanuele. 1380 Pet. Reply 9–10 (citing Ex. 1034 ¶¶ 31–36; Ex. 1036, 4:9–33, 4:53–55, 5:4–41, 5:46–56, 6:29–41; Ex. 1037, 1:62–2:4; Ex. 1038, 3:18–20, 3:23–31). In view of this, we find that, when using Thomson's apparatus, a person of ordinary skill in the art would have had reason to expect better success by stimulating in an open hole in at least some circumstances. Moreover, the evidence as a whole indicates that even if those of ordinary skill in the art might have

expected some potential challenges with open hole multistage fracturing and cased hole multistage fracturing, a reasonable expectation of success still exists with both. After all, Patent Owner strenuously emphasizes the popularity of cemented wellbores in the industry, notwithstanding Emanuele's disclosure that challenges can arise with this approach. *Soft Gel Techs., Inc. v. Jarrow Formulas, Inc.*, 864 F.3d 1334, 1341 (Fed. Cir. 2017) (citing *Noelle v. Lederman*, 355 F.3d 1343, 1352 (Fed. Cir. 2004)); *see also Hoffman-La Roche Inc. v. Apotex, Inc.*, 748 F.3d 1326, 1331 (Fed. Cir. 2014) ("Conclusive proof of efficacy is not necessary to show obviousness. All that is required is a reasonable expectation of success.").

b. *Whether There Would Have Been Reason to Replace Thomson's Tailpipe Plug with Halliburton's Plug*

Regarding whether a person of ordinary skill in the art would have had reason to combine the teachings of Thomson and Halliburton, Patent Owner argues that Petitioner does not show that a person of ordinary skill in the art would modify Thomson's system to use Halliburton's pump open plug as the tailpipe plug. 1380 PO Resp. 56–61. Patent Owner argues that Thomson teaches away from using a pump open plug. *Id.* at 56–59. Patent Owner reasons that (1) Thomson discusses difficulties with a pump out plug, and (2) a pump open plug is "[l]ike Thomson's pump out plug" because it "contains a single set of shear pins that could fail prematurely, and it contains no mechanism for allowing multiple pressure tests." *Id.* at 59.

Patent Owner further argues that Thomson suggests using a disappearing plug in lieu of a pump out plug or a cycle plug. *Id.* at 58–59. Noting that Halliburton discloses a disappearing plug, Patent Owner argues that a person of ordinary skill in the art would have viewed Halliburton's

disappearing plug as the solution to the problems discussed in Thomson. *Id.* at 59. Patent Owner criticizes Petitioner as providing no "explanation as to why a [person of ordinary skill in the art] would bypass the teachings of Thomson and [use] a pump open plug instead of the recommended disappearing plug." *Id.*

In response, Petitioner notes that Mr. McGowen does not support Patent Owner's arguments that it would not have been obvious to use Halliburton's pump open plug with Thomson's system. 1380 Pet. Reply 1. Petitioner also notes that Dr. Daneshy's testimony contradicts Patent Owner's arguments. *Id.*

We find Petitioner's evidence and arguments more persuasive. We agree with Petitioner that Thomson's indication of a desire to use a tailpipe plug different from a pump out or cycle plug provides express motivation to use a different type of tailpipe plug. *See, e.g.*, Ex. 1002, 4–5; Ex. 1005 ¶ 80; 1380 Pet. 37–39. Furthermore, we find persuasive Petitioner's evidence that a person of ordinary skill in the art would have viewed Halliburton's pump open plug as a good option for replacing Thomson's tailpipe plug. Thomson's tailpipe plug serves the purpose of holding pressure inside the tubing string to allow setting packers, followed by opening when needed to allow fluid flow out of the tubing string. *See, e.g.*, Ex. 1002, 3 ("Once the lower half of the completion was on depth, pressure was applied down the tubing against the pump-out plug . . . to set all seven packers simultaneously."), 4 ("If the plug expends early, the packers cannot be set, and the completion cannot be tested. If it does not expend, there is no flow path to enable balls to be pumped to their mating seat."). Thus,

Halliburton's disclosure that its pump open plug "holds pressure from either direction but can be pumped open by applying excess surface pressure" (Ex. 1004, 96) would commend it as well-suited for a tailpipe plug in Thomson's system. Moreover, we find Petitioner's evidence demonstrates that a person of ordinary skill in the art would have had a reasonable expectation of success in using Halliburton's plug for this purpose, and that doing so involves nothing more than a simple substitution of one known element for another with predictable results. *See, e.g.*, Ex. 1005 ¶¶ 43, 75–82.

We disagree with Patent Owner's contention that Thomson teaches away from using a pump open plug. *See* 1380 PO Resp. 56–59. Although Thomson discusses certain challenges with a pump out plug and a cycle plug (Ex. 1002, 3–5), Patent Owner does not identify any statement in Thomson that criticizes, discredits or otherwise discourages use of a pump open plug. *See* 1380 PO Resp. 56–59. Patent Owner advances speculative attorney argument that a person of ordinary skill in the art would associate Thomson's concerns about pump out and cycle plugs with a pump open plug. *See, e.g.,* 1380 PO Resp 58–59. In contrast, Petitioner provides persuasive testimony of Dr. Daneshy, supported by documentary evidence, persuading us that a person of ordinary skill in the art would have had ample confidence in Halliburton's pump open plug for use at the end of Thomson's tubing string. *See, e.g.,* Ex. 1005 ¶¶ 75–78, 82.

We also find unpersuasive Patent Owner's attorney argument that the prior art does not expressly disclose the exact combination Petitioner proposes. *See KSR*, 550 U.S. at 418 ("[T]he analysis need not seek out

precise teachings directed to the specific subject matter of the challenged claim, for a court can take account of the inferences and creative steps that a person of ordinary skill in the art would employ."); *id.* at 421 ("A person of ordinary skill is also a person of ordinary creativity, not an automaton."). As noted above, Petitioner's evidence persuades us it would have been apparent to a person of ordinary skill in the art that the configuration of Halliburton's plug lends itself to the very function Thomson's tailpipe plug needs to provide. Our finding that a person of ordinary skill in the art would have had reason to use a pump open plug is not negated by Thomson's discussion of possibly using a disappearing plug. Moreover, we do not agree with Patent Owner's suggestion that a person of ordinary skill in the art would have concluded from any of the cited portions of Halliburton to use a disappearing plug to the exclusion of the pump open plug.

6. *Objective Indicia of Non-Obviousness*

Patent Owner presents evidence of objective indicia of non-obviousness, including proceeding contrary to accepted wisdom, copying, commercial success, and industry praise. Evidence of objective indicia of non-obviousness, when present, must always be considered en route to a determination of obviousness. *See In re Cyclobenzaprine Hydrochloride Extended-Release Capsule Patent Litig.*, 676 F.3d 1063, 1075–76 (Fed. Cir. 2012). We begin our analysis by considering Patent Owner's evidence of nexus.

a. *Nexus*

The parties dispute whether Patent Owner has demonstrated a nexus between Packers Plus' StackFRAC, Baker Hughes' FracPoint system, and Weatherford's ZoneSelect system and the challenged claims. 1380 PO

Resp. 41–43; 1380 Pet. Reply 15–23. Patent Owner's evidence shows that the StackFRAC apparatus sold by Packers Plus meets most of the limitations of claim 1. Ex. 2050, 7, 43, Exhibit A; Ex. 2081, 30; *see also* Ex. 2029 ("StackFRAC systems use RockSEAL® hydraulically set mechanical packers to isolate zones together with ball-actuated hydraulically activated FracPORT™ sleeves."). Additionally, Patent Owner presents evidence persuading us that the StackFRAC apparatus is designed to be suitable for open hole fracturing. *See* Ex. 2013 (explaining that the "StackFRAC system is designed to provide open hole fracturing").

We agree, however, with Petitioner that Patent Owner has not provided persuasive evidence that StackFRAC, FracPoint, or ZoneSelect includes claim 1's "hydraulically actuated sleeve." 1380 Pet. Reply 13, 15–17. In his original declaration, Mr. McGowen provides claim charts comparing StackFRAC and FracPoint to certain claims of U.S. Patent 7,861,774, U.S. Patent 7,134,505, and U.S. Patent 7,543,634. Ex. 2050, 64–77. These claim charts do not address the "hydraulically actuated sliding sleeve" of claim 1 of the '501 patent. *See id.* In his second declaration, Mr. McGowen provides a conclusory assertion that StackFRAC and FracPoint have the claimed hydraulically actuated sliding sleeve. Ex. 2081, 30. We do not find this testimony persuasive, and Patent Owner does not provide other evidence persuading us that StackFRAC or FracPoint includes the claimed hydraulically actuated sliding sleeve.

Regarding ZoneSelect, Mr. McGowen testifies that:

> In my original declaration, I analyzed whether Baker Hughes and Packers Plus offered system that practiced various asserted claims. I have now considered whether Weatherford does as

> well. It does. Weatherford's ZoneSelect system is an open hole fracturing system that divides a well into zones using solid body packers and it uses ball-activated sliding sleeves to open a port in each zone to fracture the formation. Additional explanation is provided in the chart attached to this declaration and financial information for this system is provided in exhibit 2080.

Ex. 2081, 22. The claim chart mentioned by Mr. McGowen outlines how ZoneSelect allegedly practices claim 1 of U.S. Patent 7,861,774. *Id.* at 33–51. The chart does not address any claim of the '501 patent. Nor does Mr. McGowen otherwise provide persuasive, detailed testimony regarding how ZoneSelect meets the limitations of claim 1 of the '501 patent. Thus, Mr. McGowen does not explain whether ZoneSelect includes claim 1's "hydraulically actuated sleeve." For at least these reasons, the evidence does not support a finding that there is nexus between StackFRAC, FracPoint, or ZoneSelect and the challenged claims.

Moreover, even if StackFRAC, FracPoint, and ZoneSelect did meet all of the apparatus limitations of the challenged claims, that does not establish a nexus for all of the equipment sold. Claim 1 is a method claim that not only requires using certain equipment, but also requires performing certain method steps with the equipment. In particular, claim 1 requires "running a tubing string into an open hole and uncased, non-vertical section of the wellbore" (Ex. 1001, 14:1–2) and "expanding radially outward the first, second, and third solid body packers until each of the first, second and third solid body packers sets and seals against the wellbore wall in the open hole and uncased, non-vertical section of the wellbore" (*id.* at 15:4–8). Petitioner argues that Patent Owner does not establish a nexus between claim 1 and the StackFRAC and FracPoint apparatuses because Patent

Owner does not demonstrate that Packers Plus or Baker Hughes performed any of the method steps of claim 1 using StackFRAC or FracPoint. 1380 Pet. Reply 21–22.

Some of the evidence persuades us that in at least some instances, the equipment sold by Packers Plus and Baker Hughes is installed by others in open hole wellbore sections. For example, whereas claim 1 recites "running a tubing string into an open hole and uncased, non-vertical section of the wellbore" (Ex. 1001, 14:1–2), a Packers Plus advertisement states "StackFRAC HD technology allows you to increase your production by running longer laterals with shorter stage lengths . . . open hole systems provide an excellent opportunity to complete two or more laterals off of one vertical wellbore." Ex. 2017, 1. Regarding FracPoint, Baker Hughes' documents disclose use of the apparatus in an open hole wellbore. For example, Patent Owner notes that Exhibit 2018 discloses that using FracPoint "eliminated the need for cementing the liner, coiled tubing operations, and wireline operations, while significantly reducing overall pumping time." Ex. 2018, 1; 1380 PO Resp. 41. This evidence, however, does not tell us what portion of the equipment sold is used in an open hole wellbore versus a cased wellbore. Thus, even if the StackFRAC and FracPoint equipment did meet the apparatus limitations of the challenged claims, Patent Owner's evidence does not demonstrate what portion of the equipment Packers Plus and Baker Hughes sells would have a nexus to the challenged method claims.

b. *Commercial Success*

In asserting commercial success of the patented invention, Patent Owner relies on its own commercial success, Baker Hughes', and Weatherford's. 1380 PO Resp. 37–41. Patent Owner argues that "the Patented technology has generated hundreds of millions of dollars in annual revenue for Packers Plus," and over 40,000 FracPoint sleeves have been installed in North America between 2005 and 2012. *Id.* at 38. Additionally, Patent Owner argues that "Weatherford's sales also demonstrate the commercial success of its ZoneSelect system." *Id.* at 39. For the reasons explained above in Section III.B.6.a, we do not find a nexus between the challenged claims and Patent Owner's, Baker Hughes', or Weatherford's sales.

Moreover, even if a nexus did exist for at least some of the equipment sold, the evidence does not demonstrate commercial success of the claimed invention. In support of Patent Owner's alleged commercial success with the patented invention, Patent Owner relies principally on the testimony of Packers Plus' Chief Financial Officer, J.J. Giraldi. Ex. 2035; 1380 PO Resp. 26–27, 38. Mr. Giraldi states in his declaration that "Packers Plus has sold tools for or performed fracture treatments for tens of thousands of StackFRAC stages in the United States. That work accounts for the vast majority of Packers Plus'[s] overall revenue and profits." Ex. 2035, 1. Mr. Giraldi states further that Packers Plus is "generating [redacted] and that "[t]he StackFRAC system has been critical to that success." *Id.*

Regarding Baker Hughes, Patent Owner argues that "[b]etween late 2008 and early 2015 Baker Hughes has generated over a billion dollars in U.S. revenue from [FracPoint]." 1380 PO Resp. 39 (citing Ex. 2050, 42; Ex. 2081 ¶ 11). Additionally, Patent Owner asserts that there has been a significant growth rate for the installation of FracPoint sleeves. *Id.* at 38–39 (citing Ex. 2019, 6). Patent Owner also argues that Dr. Daneshy has confirmed the commercial success of StackFRAC and FracPoint. 1380 PO Resp. 40–41 (citing Ex. 2016, 94:2–96:5).

For several reasons, the evidence regarding Packers Plus' sales does not support a finding of commercial success. Mr. Giraldi, testifies that Packers Plus' [redacted], but fails to state what part of that annual revenue is due to StackFRAC. *See* Ex. 2035 (Mr. Giraldi testifies only that StackFRAC "accounts for the vast majority of Packers Plus' overall revenue and profits."). Thus, the evidence of record does not show how much revenue Packers Plus generated from sales of the StackFRAC components.

Additionally, the evidence does not inform us how much of Packers Plus' revenue ties to uses of the StackFRAC apparatus for "open hole" treatment. In this vein, we note that Packers Plus itself touts StackFRAC as "designated for open and cased hole stimulation," listing "[o]pen and cased hole horizontal and vertical wells" as "[a]pplications" of the StackFRAC multi-stage fracturing system. Ex. 2017, 4. Thus, the evidence does not

demonstrate, even remotely, how much of Packers Plus' revenue is actually associated with the practice of the claimed invention.[20]

Moreover, even if the evidence demonstrated the amount of revenue attributable to uses of StackFRAC in accordance with the challenged claims, Patent Owner does not provide evidence demonstrating the relevant market. Instead, Patent Owner asserts that "there is no requirement that a patentee demonstrate that the patented invention is the only product in the market or even that it is the most popular product in the market." 1380 PO Resp. 37–38 (citing *Apple Inc. v. Samsung Elecs. Co.*, 839 F.3d 1034, 1054 (Fed. Cir. 2016)). Patent Owner characterizes *Apple* as "finding that the iPhone has been commercially successful despite the fact that it is not the dominant phone in the smartphone market." *Id.*

We find Patent Owner's reliance on *Apple* unavailing. *Apple* addressed the issue of whether a nexus existed, not whether commercial success existed. *See Apple*, 839 F.3d at 1054–1055. ("We look to the record to ascertain whether there is substantial evidence for the jury's fact finding that Apple established a nexus between commercial success and the invention in claim 8."). *Apple* determined that a nexus had been shown, stating that "[t]his record overall contains substantial evidence of a nexus between the slide to unlock feature and the iPhone's commercial success." *Id.* at 1056. Contrary to Patent Owner's suggestion, *Apple* did not involve a

[20] Regarding Dr. Daneshy's affirmative response to the question "[w]ould you say that StackFRAC has been commercially successful?" (Ex. 2016, 95:23–96:2), this also provides little or no support for the commercial success of the claimed invention as a whole, which requires using StackFRAC in a certain way.

dispute regarding the existence of commercial success, much less discuss whether the iPhone dominated the market. *See id.* at 1054–1056. Patent Owner's citation of *Apple* does not persuade us that we should also find commercial success in spite of the lack of persuasive evidence that use of StackFRAC in accordance with the challenged claims has been significant in the relevant market.

We also find that the evidence regarding Baker Hughes' sales of FracPoint apparatus does not support a finding of commercial success. Regarding the alleged commercial success of Baker Hughes' FracPoint system, we have only an uncorroborated estimate of FracPoint revenue. Ex. 2081, 22–24. Moreover, even if we assume Baker Hughes' estimate of FracPoint revenue is accurate, the evidence regarding FracPoint apparatus sales does not demonstrate, even remotely, how much of the sold FracPoint equipment is used in open hole wellbores.[21] In this vein, we note that the applications identified for FracPoint include "open or cased hole[s]." Ex. 2019, 12.[22]

Regarding Weatherford, Patent Owner argues that ZoneSelect accounts for twelve percent of Weatherford's sales. 1380 PO Resp. 39.

---

[21] Regarding Dr. Daneshy's affirmative response to the question "[w]ould you say Fracpoint's been commercially successful?" (Ex. 2016, 96:2–5), this also provides little or no support for the commercial success of the claimed invention as a whole, which requires using a stimulating apparatus in an open hole.

[22] Exhibit 2019, a 22-page slide deck bearing Baker Hughes' markings, is improperly labeled as Exhibit 2016. Exhibit 2016 is a deposition of Dr. Daneshy.

However, Patent Owner does not provide cogent evidence of how much of the overall market for open hole multistage fracturing (all companies performing fracturing completions) involves the use of tools consistent with those recited in the claims. Moreover, weighing against a finding of commercial success of the claimed invention, the evidence regarding Weatherford's sales indicates that using plug and perf techniques with cased wells is associated with 78% of Weatherford's business. *See* Ex. 2074, Fig. 1. This tends to show success of cased hole uses, rather than open hole uses. The evidence regarding Weatherford's sales does not support a finding of commercial success of the claimed invention.

c. *Industry Praise*

Asserting that the StackFRAC system accounts for "the vast majority of Packers Plus'[s]" [redacted], Patent Owner argues that a variety of media sources, technical journals, and industry analysts have praised the StackFRAC system. 1380 PO Resp. 26–31 (citing Exs. 2001, 2005–2009, 2020–2022, 2024, 2033–2037, 2046, 2060) (emphasis omitted). Patent Owner argues, for example, that a confidential industry report by [redacted], obtained from a competitor, Baker Hughes, [redacted] *Id.* at 30 (citing Ex. 2024). Patent Owner also asserts that a 2013 technical paper by BP America "identified a Packers Plus article as describing 'the first commercial OHMS [Open Hole Multi-Stage] systems [that] were developed and deployed in 2001.'" *Id.* (citing Ex. 2001, 4). Patent Owner argues further that Schlumberger, allegedly the largest oil and gas service company in the world, negotiated for and credited

Packers Plus' technologies as facilitating the development of Schlumberger's StageFRAC multistage fracturing service for horizontal wells. *Id.* 30–31 (citing Ex. 2022, 1) ("Packers Plus has established an industry leading reputation with their systems, which when combined with our services, offers a powerful solution."). Patent Owner contends that "[t]his high praise from a major competitor, and its desire to obtain rights to the technology is highly compelling evidence of non-obviousness." *Id.* at 31.

Petitioner argues that the cited documents do not praise the use of StackFRAC in accordance with the claimed method. 1380 Pet. Reply 18–20. Instead, Petitioner asserts that all of the documents "focus on the StackFRAC system, already taught by Thomson . . . , rather than on [use of the StackFRAC system in accordance with the challenged claims]." *Id.* at 18.

Industry praise for an invention may provide evidence of nonobviousness where the industry praise is linked to the claimed invention. *See Geo. M. Martin Co. v. Alliance Mach. Sys. Intern. LLC*, 618 F.3d 1294, 1305 (Fed. Cir. 2010); *Asyst Tech'n, Inc., v. Emtrak, Inc.*, 544 F.3d 1310, 1316 (Fed. Cir. 2008). Patent Owner has supplied credible evidence that use of the StackFRAC system in open holes was praised and recognized in the oil and gas industry. For example, calling StackFRAC an "innovation," Alberta Oil Magazine stated that "StackFRAC, the company's prize product and primary innovation, is an open hole ball drop completion system that's widely credited with unlocking old resource plays that were thought to be too expensive or too technically challenging to tap." Ex. 2005. Petitioner

argues that this statement does not explicitly refer to using StackFRAC in an open hole, asserting that Thomson system is suited for use in an open hole. 1380 Pet. Reply 19. We agree with Petitioner that "open hole ball drop systems" appear to have application in both open and cemented holes. *See, e.g.*, Ex. 2017, 4 ("StackFRAC® systems are designated for open and cased hole stimulation."). Nonetheless, we believe this particular article implies praise for actually using the system in open holes to "unlock[] old resource plays that were thought to be too expensive or too technically challenging to tap." Ex. 2005.

Other examples of Patent Owner's evidence provide less convincing support for Patent Owner's assertion of industry praise. For instance, Canadian OilPatch Technology Guidebook (Ex. 2006) "profiled Packers Plus and its StackFRAC technology." 1380 PO Resp. 28. This article describes Packers Plus as a "[m]ultistage fracking pioneer" that "revolutionized the completions sector." Ex. 2006. This provides some support for Patent Owner's assertion of industry praise. At the same time, the article includes portions suggesting that the desirable feature of StackFRAC consists of facilitating the performance of a number of fracturing stages. *Id.* ("'When we started you could do five fracs,' he said. 'Our StackFRAC brought that up to 20 and now we have technology that can do 60.'"). Given that Thomson touts its ability to provide the same advantage of facilitating the performance of a number of fracturing stages, the persuasive value of Patent Owner's evidence of industry praise is somewhat diminished. *See, e.g.*, Ex. 1002, 1, Abst.; Ex. 1005 ¶ 68.

Thus, the exhibits presented by Patent Owner provide some evidence of industry praise. Certain of the exhibits appear to provide praise specifically for the claimed invention as a whole, as asserted by Patent Owner. Others of the exhibits are less convincing for Patent Owner's position. Although the persuasive value of Patent Owner's evidence does not appear commensurate with the number of exhibits allegedly showing industry praise, we give some weight to industry publications that highlight the specific technical aspects and elements corresponding to the claims in the '501 patent.

d. *Copying*

We turn to Patent Owner's allegations of copying. 1380 PO Resp. 31–36. Patent Owner offers two technical documents in support of its copying allegation. One document is labeled "Packers Plus" and details the well completion tooling for what is apparently the StackFRAC tooling, as it is intended for open hole horizontal fracture well completion. Ex. 2025. The other is labeled "Iso-Frac System," apparently the name (at one time) for Baker Hughes' competing system. Ex. 2024, 13. Patent Owner contends that Baker Hughes simply "replaced the Packers Plus logo and slogan with the Baker Hughes internal name for their 'equivalent' system." 1380 PO Resp. 32. Patent Owner argues further that Baker Hughes' FracPoint system employs the same components as used in Packers Plus' StackFRAC system. *Id.* at 34–36.

Asserting that copying is only equivocal evidence of nonobviousness, Petitioner argues that Patent Owner's evidence does not show copying and lacks a nexus. 1380 Pet. Reply 24. Petitioner argues that neither

Exhibit 2024 nor Exhibit 2025 shows the hydraulically actuated sliding sleeve recited in the challenged claims. *Id.* Petitioner also argues that "the StackFRAC system of Ex. 2025 is in the prior art (Thomson)." *Id.*

We find that the evidence does not show that Petitioner copied claim 1's "hydraulically actuated sliding sleeve" and associated limitations. Patent Owner argues that Exhibits 2024 and 2025 show identical components. 1380 PO Resp. 32. But Patent Owner does not allege that either Exhibit 2024 or Exhibit 2025 shows the claimed "hydraulically actuated sliding sleeve." *Id.* at 31–36. Instead, Patent Owner alleges that "Packers Plus' StackFRAC system and Baker Hughes' FracPoint system are strikingly similar. Mr. McGowen has concluded that both systems practice at least claim 1 of the '774 patent." *Id.* at 34–35. This fails to demonstrate that Petitioner copied the "hydraulically actuated sliding sleeve" in claim 1 of the '501 patent because claim 1 of the '774 patent does not recite a hydraulically actuated sliding sleeve.[23] *See* Ex. 3001, 13:61–15:6. Consequently, even if the evidence shows Petitioner copied something, it does not show Baker Hughes copied the invention claimed in the '501 patent. Therefore, we find that the alleged copying does not weigh in Patent Owner's favor.

e. *Whether the Invention is Contrary to Accepted Wisdom and Produced Unexpected Results*

Patent Owner argues that the claimed technology proceeded contrary to accepted wisdom at the time of the invention, and that the technology

[23] Additionally, as discussed above in Section III.B.6.a, we find unpersuasive Mr. McGowen's conclusory testimony that FracPoint and StakFRAC also include the "hydraulically actuated sliding sleeve" recited in claim 1. *See* Ex. 2081, 30.

demonstrated unexpected results. 1380 PO Resp. 21–26. Patent Owner suggests that the accepted wisdom at the time of the invention viewed it as necessary to use perforated casing to produce carefully spaced "disc-shaped 'bi-wing' fractures." *Id.* at 21. For the reasons explained in Section III.B.4 above, Petitioner persuades us that this was not the accepted wisdom at the time of the invention.

Additionally, the evidence of record does not support Patent Owner's assertion of unexpected or surprising results. Patent Owner argues that a 2006 Packers Plus document reporting the results of hundreds of open hole jobs noted that:

> [w]hat has been witnessed in the field is when the horizontal wellbore is partitioned, each compartment has a unique pressure signature for fracturing and or stimulating. (Figure 2) This unique pressure signature for each stage provides real time evidence that the packers are providing the mechanical diversion for which they are designed. If the fracture or stimulation was going past the packer, then the pressures would be the same for the adjacent interval.

Ex. 2004, 3; 1380 PO Resp. 23. Patent Owner's position derives little support from this statement, which discloses the technology works as desired, but does not disclose that the result was unexpected.

Patent Owner also asserts that Packers Plus "published microseismic data indicating just how effectively the patented technology has been able to generate fractures." 1380 PO Resp. 24. According to the Packers Plus document publishing the microseismic data, it has "proven out key features of the StackFRAC Multi-Stage Fracturing System," including "[f]racture initiation between packers proving mechanical isolation" and "[f]ull coverage of the wellbore with specifically located stimulation." Ex. 2017, 4.

This evidence also provides little support for Patent Owner's assertion of unexpected results. Here again, the evidence discloses that using StackFRAC provided the desired results. For example, the statement that testing had "proven out" the results of using StackFRAC conveys that using the system had provided the intended result. But it conveys little or no surprise, suggesting instead that the tests proved the expected operation of the system.[24] Exhibit 2017 does not corroborate Mr. McGowen's unsupported assertion that the results were "astonishing." Ex. 2050, 41.

Patent Owner also points to a paper titled, *Comparative Study of Cemented Versus Uncemented Multi-Stage Fractured Wells in the Barnett Shale*, published in 2010 by the Society of Petroleum Engineers. 1380 PO Resp. 23–24 (citing Ex. 2003 ("The Barnet Shale Paper")). The Barnett Shale paper explains that open hole multistage completions in the Barnett shale formation in Texas apparently outperformed cemented liner completions based on cost savings, improved fracture stimulation, and well production. Ex. 2003, 3. Once again, this evidence shows that open hole multistage fracturing performed as desired in a shale formation, but does not necessarily show that such results were unexpected or surprising. One of ordinary skill in the art would have known from at least Coon that open hole multistage stimulation could be done, and would have also known that open hole stimulation held significant promise relative to cemented multistage

[24] Moreover, Exhibit 2017 discloses that "StackFRAC® systems are designated for open and cased hole stimulation." Ex. 2017, 4. Thus, even if Exhibit 2017 disclosed unexpected results, it appears they would not be specifically for open hole multistage fracturing, as Patent Owner suggests. *See, e.g.,* 1380 PO Resp. 24–25.

fracturing using plug and perf. *See, e.g.,* Ex. 1023, 14; Ex. 1034 ¶¶ 24–36. On the whole, the evidence of record does not support a finding that the claimed invention produced unexpected results.

7. *Conclusion on Obviousness*

Having individually considered each of the *Graham* factors, we now weigh them collectively. The scope and content of the prior art, as well as the differences between the prior art and the challenged, weigh heavily in favor of Petitioner's contention that the claims would have been obvious. As explained above in Section III.B.3, the only differences between Thomson and the claims are (1) Thomson does not teach performing the fracturing in an open hole section of a wellbore, and (2) the plug at the end of Thomson's tubing string differs from the claimed "third port" and associated "hydraulically actuated sliding sleeve."

Regarding the first difference, Ellsworth discloses use of an apparatus like Thomson's in open hole wellbores in at least some circumstances, indicating that Thomson's apparatus would have been expected to successfully achieve sealing between its solid body packers and an open hole wellbore. *See, e.g.*, Ex. 1003, 4–6, 9; Ex. 1005 ¶¶ 41–42; 1380 Pet. 40–41. Additionally, Thomson suggests that its apparatus provides desirable time and cost savings, noting that "[a]s more experience is obtained with the system, increased efficiency will undoubtedly be generated." Ex. 1002, 5. In this vein, Ellsworth's "Summary" discloses that the ability to use equipment like Thomson's without running and cementing liners furthers the goal of cost effective use of horizontal wellbore segments. Ex. 1003, 8–9. Performing operations in an open hole wellbore provides advantages in the form of reduced time and complexity, as compared to casing the wellbore.

See, e.g., Ex. 1002, 1. Disclosures like this contribute to a compelling motivation to use Thomson's apparatus in an open hole wellbore. *See also* Ex. 1005 ¶¶ 41–42, 83.

Regarding the second difference between Thomson and the challenged claims, Halliburton's pump open plug meets the limitations of the claims associated with the "third port" and "hydraulically actuated sliding sleeve." And Petitioner persuades us that a person of ordinary skill in the art would have had motivation and a reasonable expectation of success for using Halliburton's pump open plug in lieu of the cycle plug at the end of Thomson's tubing string. *See, e.g.*, 1380 Pet. 13–15, 32–40. A person of ordinary skill in the art would have had reason to use Halliburton's pump-open plug as a tailpipe plug, for example, because (as explained above in Section III.B.5.b) a person of ordinary skill in the art would have expected Halliburton's pump-open plug to provide successfully the functions needed of a tailpipe plug.

The level of ordinary skill in the art also weighs in favor of Petitioner's assertion that the challenged claims would have been obvious. For the reasons explained immediately above and in Section III.B.5, we are persuaded that a person of ordinary skill in the art would have viewed it as desirable to use Thomson's apparatus in an open hole wellbore. And although cased hole completions apparently enjoyed popularity as a way to perform multistage fracturing, a person of ordinary skill in the art would have also understood that open hole multistage fracturing could be

performed in at least some circumstances.[25] *See* Sections III.B.4, III.B.6.e. Additionally, for the reasons explained in Sections III.B.4, III.B.6.e, and III.B.5, we find that a person of ordinary skill in the art would have had a reasonable expectation of success in implementing Thomson's apparatus within an open hole. That some might not have thought it appropriate to perform open hole multi-stage fracturing in all circumstances is not determinative. *See KSR*, 550 U.S. at 416 ("If the claim extends to what is obvious, it is invalid under § 103.").

Some of the objective indicia of non-obviousness advanced by Patent Owner weighs in favor of non-obviousness. In particular, to some extent, Patent Owner's evidence of industry praise weighs in favor of non-obviousness. *See* Section III.B.6.c. The other evidence of objective indicia of non-obviousness does not weigh in favor of Patent Owner. *See* Sections III.B.6.b, III.B.6.d, and III.B.6.e.

On the whole, because they weigh heavily in favor of obviousness, we determine that the first three *Graham* factors outweigh the evidence of industry praise. Accordingly, we conclude that Petitioner has demonstrated by a preponderance of the evidence that claims 1–9 would have been obvious over Thomson, Ellsworth, and Halliburton

[25] Consistent with this, the '501 patent does not indicate any prior concerns about performing multi-stage fracturing in an open hole wellbore, stating instead that "[t]he apparatus and methods of the present invention can be used in various borehole conditions including open holes, cased holes, vertical holes, horizontal holes, straight holes or deviated holes." Ex. 1001, 2:42–46.

C. Petitioner's Other Challenges

Having determined that Petitioner has demonstrated obviousness of claims 1–9 over Thomson, Ellsworth, and Halliburton, we deem Petitioner's other challenges of claims 1–9 moot.

IV. CONCLUSION

For the reasons expressed above, we determine that Petitioner has demonstrated the following by a preponderance of the evidence:

Claims 1–9 are unpatentable as obvious over Thomson, Ellsworth, and Halliburton.

IV. ORDERS

After due consideration of the record before us, it is:

ORDERED that claims 1–9 have been shown to be unpatentable; and

FURTHER ORDERED that, because this is a Final Written Decision, parties to the proceeding seeking judicial review of the Decision must comply with the notice and service requirements of 37 C.F.R. § 90.2.

PETITIONER:

Mark Garrett
Eagle Robinson
NORTON ROSE FULBRIGHT US LLP
mark.garrett@nortonrosefulbright.com
eagle.robinson@nortonrosefulbright.com

PATENT OWNER:

Hamad Hamad
CALDWELL CASSADY CURRY
hhamad@caldwellcc.com

Gregory Gonsalves
GONSALVES LAW FIRM
gonsalves@gonsalveslawfirm.com