UNITED STATES PATENT AND TRADEMARK OFFICE

---

BEFORE THE PATENT TRIAL AND APPEAL BOARD

---

T-MAX (HANGZHOU) TECHNOLOGY CO., LTD. AND
T-MAX INDUSTRIAL (H.K.) CO. LTD.,

Petitioner,

v.

LUND MOTION PRODUCTS, INC.,

Patent Owner.

---

PTAB Case No. IPR2018-01636

Patent 9,561,751

---

PAPER 29

**PETITIONERS' NOTICE OF APPEAL**

Office of the General Counsel
United States Patent and Trademark Office
P.O. Box 1450
Alexandria, Virginia 22313-1450

Pursuant to 35 U.S.C. §§ 141, 142, and 319 and 37 C.F.R. § 90.2(a) Petitioners T-Max (Hangzhou) Technology Co., Ltd. and T-Max Industrial (H.K.) Co. Ltd., hereby appeals to the United States Court of Appeals for the Federal Circuit from the Final Written Decision entered March 12, 2020 (Paper 28), and from all underlying orders, decisions, rulings and opinions.

In accordance with 37 C.F.R. §90.2(a)(3)(ii), Petitioners further indicate that the issues on appeal may include, but are not limited to, the following: (1) the PTAB's constructions; (2) the PTAB's determination that Petitioner has not demonstrated by a preponderance of the evidence that claims 1-13 of U.S. Patent No. 9,561,751 (the "'751 patent") are unpatentable as obvious under 35 U.S.C. § 103(a) by the combination of United Kingdom Patent No. GB936,846 ("Matthews") and U.S. Patent No. 6,375,207 ("Dean"); (3) the PTAB's determination that Petitioner has not demonstrated by a preponderance of the evidence that claims 1-6 and 10-11 are unpatentable as obvious under 35 U.S.C. § 103(a) by the combination of Matthews, Dean and *Design of Machinery*, 2d Edition ("Norton"); and (4) any finding or determination supporting or related to those issues, as well as all other issues decided adversely to Petitioners' in any

orders, decisions, rulings and/or opinions.

In addition to this submission, a copy of this Notice of Appeal is being filed with the PTAB through the End to End System ("PTAB E2E"); and a copy is being electronically filed with the Clerk's Office for the United States Court of Appeals for the Federal Circuit (via CM/ECF), along with the required docketing fee.

Dated: April 14, 2020

Respectfully submitted,

*/John D. Esterhay/*

Back-up Counsel
John D. Esterhay, Reg. No. 73,512

PERKINS COIE LLP
11452 El Camino Real, Suite 300
San Diego, CA 92130
(858) 720-5700

Lead Counsel
Bing Ai, Reg. No. 43,312

Back-up Counsel
John P. Schnurer, Reg. No. 52,196
Kevin J. Patariu, Reg. No. 63,210
Fareid Asphahani, Reg. No. 72,217

Counsel for T-MAX (HANGZHOU) TECHNOLOGY CO., LTD. AND T-MAX INDUSTRIAL (H.K.) CO. LTD

## CERTIFICATE OF FILING

I certify that the foregoing was filed electronically with the Board through the PTAB E2E System, and a paper copy was served by Priority Mail Express on April 14, 2020 with the Director of the United States Patent and Trademark Office, at the following address:

Director of the U.S. Patent and Trademark Office
c/o Office of the General Counsel
United States Patent and Trademark Office
P.O. Box 1450
Alexandria, Virginia 22313-1450

I further certify that a true and correct copy of the foregoing Notice of Appeal, along with the required filing fee, was filed electronically with the Court of Appeals for the Federal Circuit via CM/ECF on April 14, 2020. Pursuant to Federal Circuit Administrative Order No. 20-01, a paper copy of this Notice of Appeal has not been filed with the Court of Appeals.

## CERTIFICATE OF SERVICE

The undersigned certifies service pursuant to 37 C.F.R. § 42.6 (e) of the foregoing Petitioners' Notice of Appeal via e-mail on Patent Owner's counsel of record at the addresses below:

| LEAD COUNSEL | BACK-UP COUNSEL |
|---|---|
| John B. Sganga, Jr. (Reg. No. 31,302)<br>2jbs@knobbe.com<br>Knobbe, Martens, Olson & Bear, LLP<br>2040 Main Street, 14th Floor<br>Irvine, CA 92614 | Benjamin J. Everton (Reg. No. 60,659)<br>2bje@knobbe.com<br>Loni L. Morrow (Reg. No. 72,529)<br>2lls@knobbe.com<br>Knobbe, Martens, Olson & Bear, LLP<br>2040 Main Street, 14th Floor<br>Irvine, CA 92614<br>BoxLund192-2@knobbe.com |

Dated: April 14, 2020

Respectfully submitted,

*/John D. Esterhay/*

Back-up Counsel
John D. Esterhay, Reg. No. 73,512

Lead Counsel
Bing Ai, Reg. No. 43,312

Back-up Counsel
John P. Schnurer, Reg. No. 52,196
Kevin J. Patariu, Reg. No. 63,210
Fareid Asphahani, Reg. No. 72,217

PERKINS COIE LLP
11452 El Camino Real, Suite 300
San Diego, CA 92130
(858) 720-5700

Counsel for T-MAX (HANGZHOU) TECHNOLOGY CO., LTD. AND T-MAX INDUSTRIAL (H.K.) CO. LTD

Trials@uspto.gov
571.272.7822

Paper 27
Date: March 12, 2020

UNITED STATES PATENT AND TRADEMARK OFFICE

BEFORE THE PATENT TRIAL AND APPEAL BOARD

T-MAX (HANGZHOU) TECHNOLOGY CO., LTD. and
T-MAX INDUSTRIAL (H.K.) CO. LTD.,
Petitioner,

v.

LUND MOTION PRODUCTS, INC.,
Patent Owner.

IPR2018-01636
Patent 9,561,751 B2

Before JOSIAH C. COCKS, CARL M. DEFRANCO, and
ALYSSA A. FINAMORE, *Administrative Patent Judges.*

FINAMORE, *Administrative Patent Judge.*

JUDGMENT
Final Written Decision
Determining No Challenged Claims Unpatentable
*35 U.S.C. § 318(a)*

# I. INTRODUCTION

Petitioner filed a Petition (Paper 2, "Pet.") requesting an *inter partes* review of claims 1–13 of U.S. Patent No. 9,561,751 B2 ("the '751 patent"). Pet. 1. On March 14, 2019, we instituted trial. Paper 7.

After institution, Patent Owner filed a Response. Paper 12 ("PO Resp."). Petitioner filed a Reply to Patent Owner's Response. Paper 16 ("Reply"). Patent Owner filed a Sur-Reply. Paper 18 ("Sur-Reply").

An oral argument was held on December 12, 2019. A transcript of the oral argument has been entered into the record. Paper 26 ("Tr.").

This Final Written Decision ("Decision") is issued pursuant to 35 U.S.C. § 318(a). For the reasons that follow, we conclude Petitioner has not demonstrated that claims 1–13 of the '751 patent are unpatentable by a preponderance of the evidence.

# II. BACKGROUND

## *A. Real Parties in Interest*

Petitioner identifies only itself as the real party in interest. Pet. 2. Namely, Petitioner identifies T-Max (Hangzhou) Technology Co., Ltd. and T-Max Industrial (H.K.) Co. Ltd. as real parties in interest. *Id.*

Patent Owner identifies itself, Lund Motion Products, Inc., as well as Lund International Holding Company and Highlander Partners, L.P., as real parties in interest. Paper 4, 1. In view of the acquisition of Lund International Holding Company, Patent Owner further identifies Tectum Holdings, Inc., Truck Hero, Inc., Truck Acquisition, Inc., Truck Holdings, Inc., and Truck Hero Holdings, Inc. as real parties in interest. Paper 10, 1.

### *B. Related Matters*

The parties identify the following district court action as a related matter: *Lund Motion Products, Inc. v. T-Max (Hangzhou) Technology Co., Ltd.*, No. 8:17-cv-01914 (C.D. Cal. filed Oct. 31, 2017). Pet. 2; Paper 4, 1. Petitioner further identifies the following Board proceedings: IPR2018-01638 (PTAB filed Sept. 14, 2018) (challenging U.S. Patent No. 8,157,277 B2) and IPR2018-01637 (PTAB filed Sept. 14, 2018) (challenging U.S. Patent No. 9,302,626 B2). Pet. 2. In addition to these Board proceedings, we identify IPR2019-00503 (PTAB terminated May 2, 2019) (challenging U.S. Patent No. 10,053,017 B2, which claims priority as a continuation to the ’751 patent).

### *C. The ’751 Patent (Ex. 1001)*[1]

The ’751 patent relates to “a retractable vehicle step which is movable between a retracted or storage position and an extended position in which it functions as a step assist into the vehicle.” Ex. 1001, 1:15–18. Figure 4, reproduced below, illustrates an embodiment of the invention.

[1] Petitioner submits the ’751 patent as Exhibit 1001, and its prosecution history as Exhibit 1011.

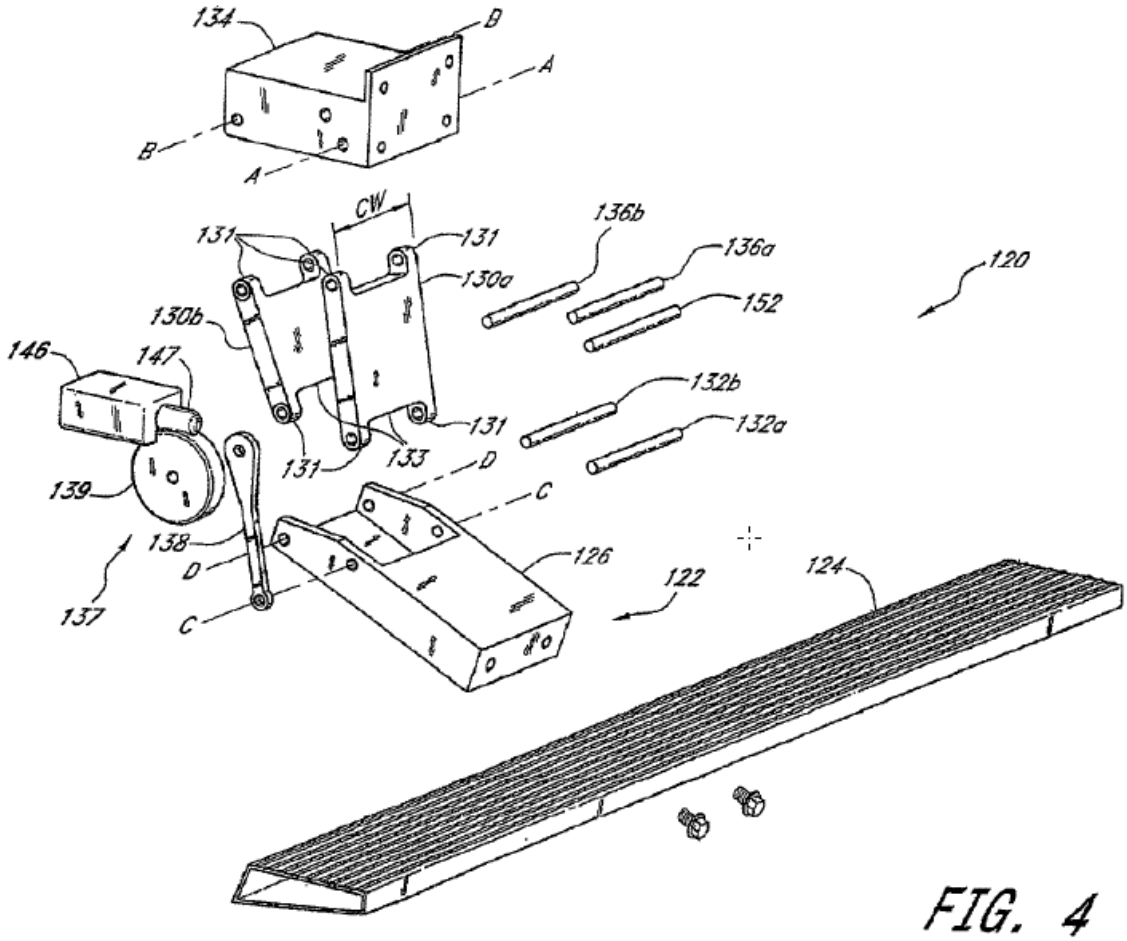


Figure 4 is an exploded perspective view of an embodiment of a retractable vehicle step. *Id.* at 11:18–19. As shown in this figure, retractable vehicle step 120 comprises stepping member 122 that includes stepping deck 124 rigidly connected to support bracket 126. *Id.* at 15:30–33. Retractable step 120 further comprises front and rear support arms 130*a*, 130*b* rotatably connected to support bracket 126 via pins 132*a*, 132*b*. *Id.* at 15:36–38. Rigid frame 134 may be configured for connection to a vehicle underbody and provides a secure mounting for support arms 130*a*, 130*b*, which are rotatably mounted to frame 134 via pins 136*a*, 136*b*. *Id.* at 15:38–42.

As shown in Figure 4, retractable step 120 defines four axes of rotation. *Id.* at 15:46–56. Specifically, front support arm 130*a* and rear

support arm 130*b* rotate with respect to the vehicle underbody or frame 134 about first axis A-A and second axis B-B, respectively. *Id.* at 15:48–52. Front support arm 130*a* and rear support arm 130*b* rotate with respect to support bracket 126 about third axis C-C and fourth axis D-D, respectively. *Id.* at 15:52–56.

With stepping member 122 moveably connected to frame 134 via support arms 130*a*, 130*b*, stepping member 122 can be moved between deployed position B and retracted position A shown respectively in Figures 3 and 5, reproduced below. *Id.* at 17:65–18:1.

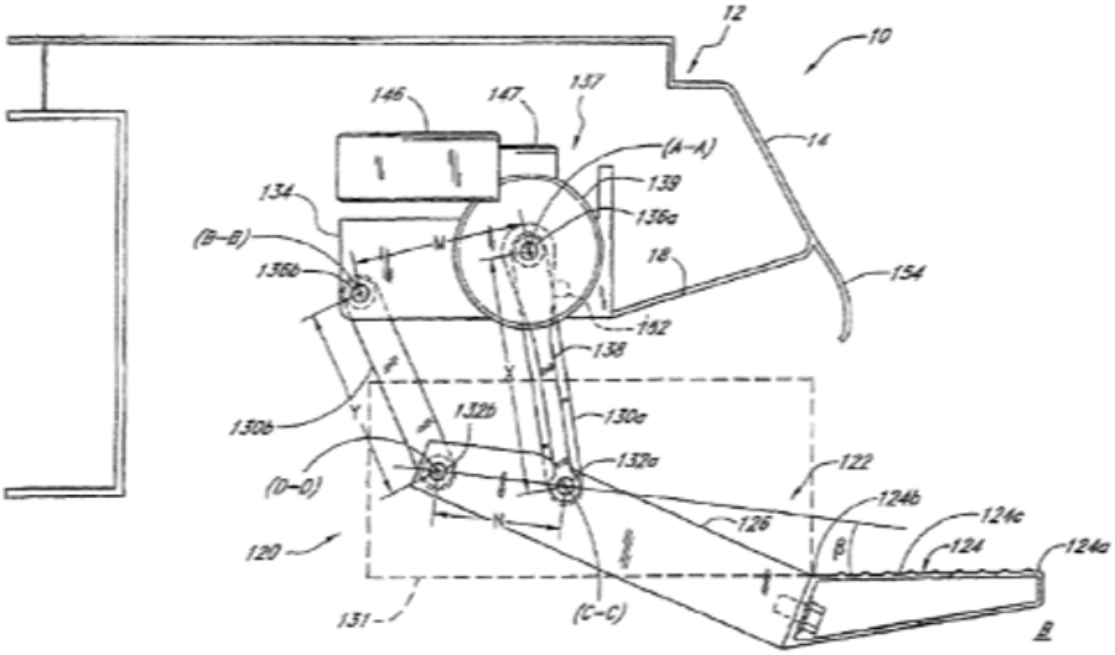


FIG. 3

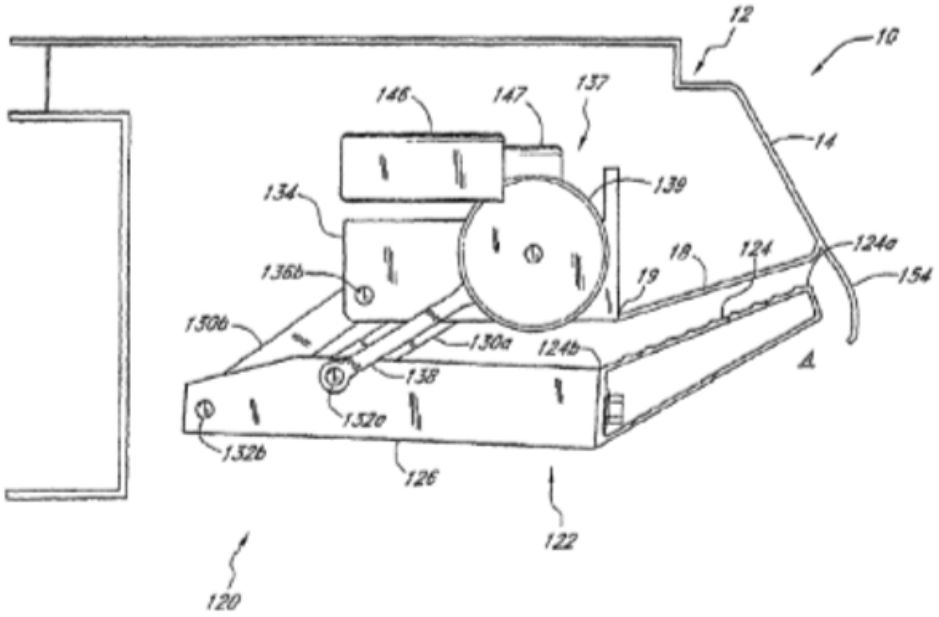


FIG. 5

Figures 3 and 5 are side elevation views of retractable step 120 in the deployed and retracted positions, respectively. *Id.* at 11:15–17, 20–21.

The geometry of stepping member 122, support arms 130*a*, 130*b*, and frame 134 causes arm 130*a* to be loaded in tension and arm 130*b* to be loaded in compression when a load is applied to stepping deck 124. *Id.* at 18:4–8. The load causes arm 130*b* to urge arm 130*a* against stop 152 by applying a horizontal reaction force to step member 122. *Id.* at 18:8–11. As a result, when stepped upon by a user, extended step 120 firmly maintains its deployed position without input from motor 146 and without requiring a separate locking mechanism. *Id.* at 18:17–23.

The ’751 patent further discloses an embodiment where the retractable step is self-energizing in the retracted position, i.e., configured to maintain the retracted position, even upon placement of a heavy load on the stepping deck, without a need for a separate locking mechanism or input from a drive

mechanism or motor. *Id.* at 31:61–66. Figure 22, reproduced below, shows this embodiment.

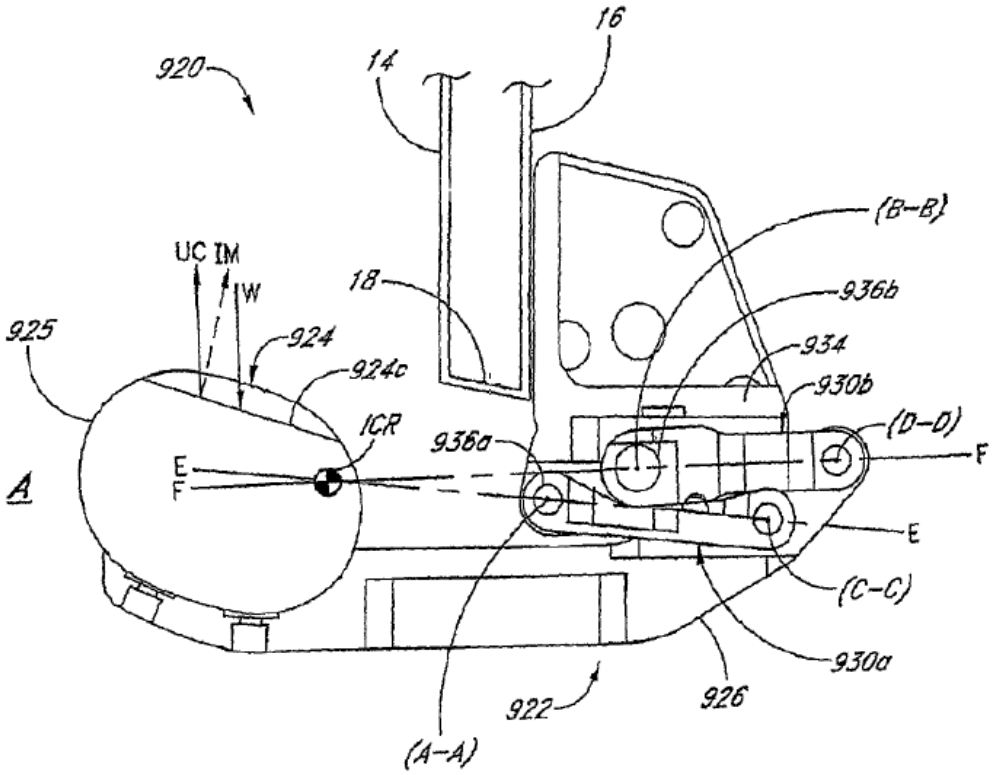


FIG. 22

Figure 22 is a side sectional view of the vehicle step in the retracted position. *Id.* at 11:56–57. Retractable step 920 is self-energizing in retracted position A when arms 930*a*, 930*b* are arranged so that the instantaneous center of rotation ("ICR") is located along an inboard-outboard axis at, or anywhere inboard of, load W applied to step member 922. *Id.* at 31:66–32:3, 32:20–24. When step member 922 is in the retracted position, placement of a load on upper stepping surface 924*c* urges step member 922 toward the retracted position, but further movement in that direction is prevented by contact between arms 930*a*, 930*b*. *Id.* at 32:11–16.

*D. Challenged Claims*

Petitioner challenges claims 1–13, which are all of the claims of the ’751 patent. Pet. 1. Claims 1, 7, and 13 are independent. Ex. 1001, 34:27–58, 35:8–42, 36:12–43. Independent claim 1, reproduced below, is illustrative.

> 1. A retractable vehicle step comprising:
> a stepping platform;
> a mounting bracket configured to be attached to a vehicle;
> a plurality of support linkages, the plurality of support linkages configured to pivotably move the stepping platform from a retracted position to an extended position located outboard of the retracted position; and
> a stepping platform linkage connected to the stepping platform and at least one of the plurality of support linkages, the stepping platform linkage having a straddling segment located on an end opposite the stepping platform, wherein the straddling segment comprises two flanges spaced apart at a width greater than a width of the at least one of the plurality of support linkages, the two flanges being configured to retain and straddle one end of the at least one of the plurality of support linkages;
> wherein the stepping platform has a width greater than the width of any of the plurality of support linkages and the stepping platform linkage;
> wherein the retractable vehicle step has at least 4 axes of rotation, two of which are located on the mounting bracket and two of which are located within the straddling segment;
> wherein the one end of the at least one of the plurality of support linkages is configured to pivot within the straddling segment;
> wherein the stepping platform is configured to move downwards and outboard when moving from the retracted position to the extended position; and
> wherein the retractable vehicle step is self-energizing in both the extended position and the retracted position.

*Id.* at 34:27–58.

*E. Evidence*

Petitioner relies on the following references in asserting that claims 1–13 of the ’751 patent are unpatentable. Pet. 1–2, 4.

| **Reference** | **Exhibit No.** |
|---|---|
| Matthews, GB 936,846, published Sept. 11, 1963 (“Matthews”) | 1006 |
| Dean et al., US 6,375,207 B1, issued Apr. 23, 2002 (“Dean”) | 1007 |
| Robert L. Norton, *Design of Machinery* (2d ed. 1999) (“Norton”) | 1008 |

Additionally, the parties rely on testimonial evidence. Petitioner submits a Declaration of Nathan J. Delson, Ph.D. (Ex. 1002), his Rebuttal Declaration (Ex. 1014), and his analysis of Matthews’s step under load in the extended position and in the retracted position (Ex. 1020). Patent Owner deposed and cross-examined Dr. Delson, and submits a transcript of the deposition (Ex. 2010).[2]

Patent Owner proffers a Declaration of John Pratt, Ph.D. (Ex. 2001) and a Declaration of Brad Watson (Ex. 2011). Petitioner deposed and cross-examined Dr. Pratt, and submits a transcript of the deposition (Ex. 1017).

[2] Petitioner also submits a transcript of Dr. Delson’s deposition (Ex. 1015).

*F. Asserted Grounds of Unpatentability*

Petitioner asserts the following grounds of unpatentability. Pet. 1–2.

| Challenged Claim(s) | 35 U.S.C. § | Reference(s)/Basis |
|---|---|---|
| 1–13 | 103(a)[3] | Matthews, Dean |
| 1–6, 10, 11 | 103(a) | Matthews, Dean, Norton |

*G. Overview of the References*

*1. Matthews (Ex. 1006)*

Matthews relates to "retractable steps for use at the threshold of the door of caravans or the like." Ex. 1006, 1:9–11. Matthews includes three figures, which are reproduced below.

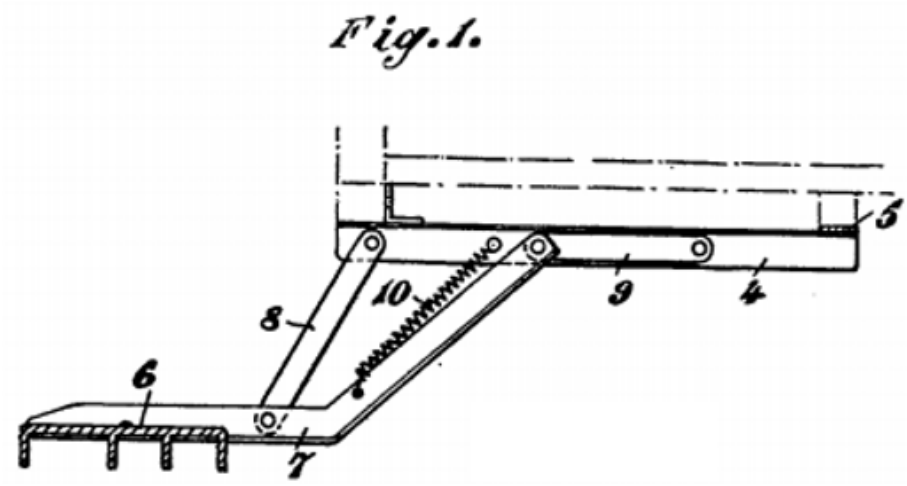


[3] The Leahy-Smith America Invents Act ("AIA"), Pub. L. No. 112-29, 125 Stat. 284, 287–88 (2011), amended 35 U.S.C. § 103, and the effective date of the relevant amendment is March 16, 2013. Petitioner acknowledges the earliest-claimed priority date of the '751 patent is February 15, 2001, and applies the pre-AIA version of § 103. Pet. 1–2.

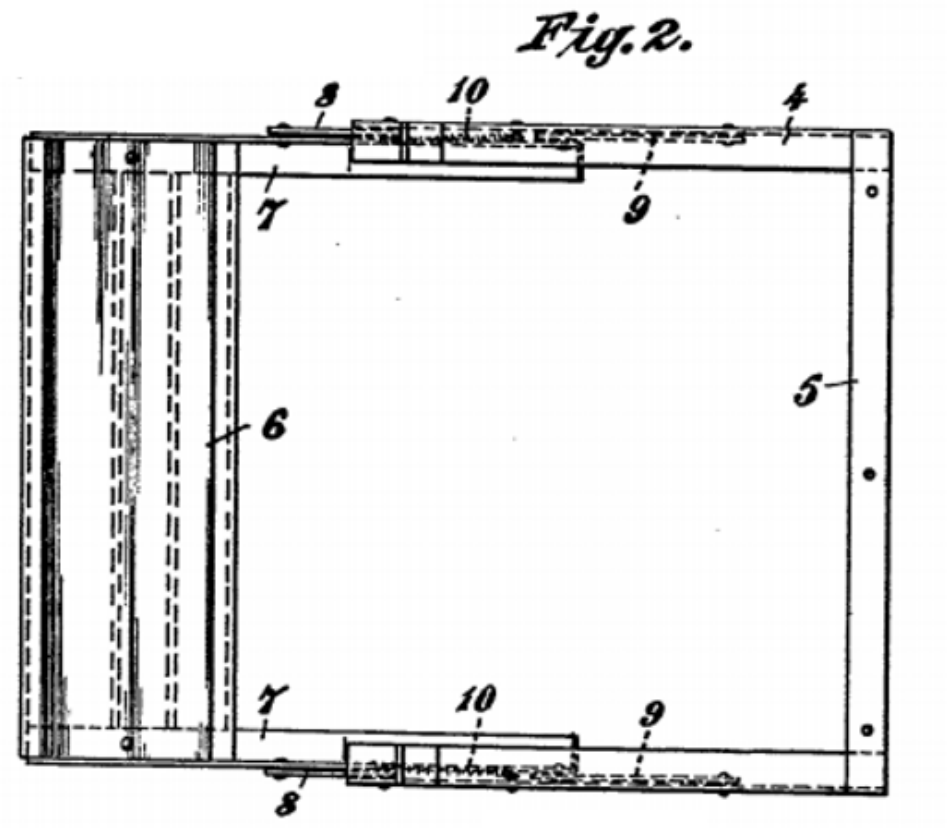


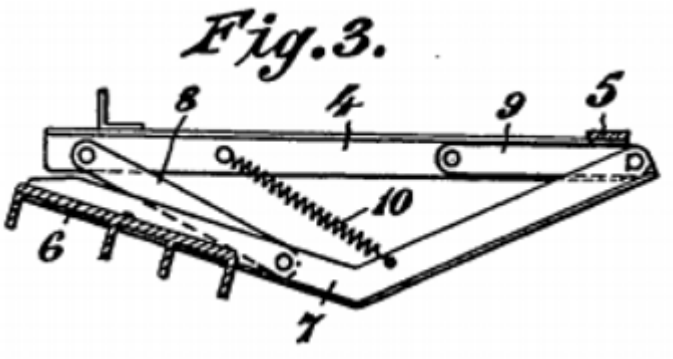


Figure 1 is a side elevation of a retractable step, and Figure 2 is a plan of the step shown in Figure 1. *Id.* at 1:43–47. Figure 3 is a side elevation of the step in the retracted position. *Id.* at 1:48–50.

Frame 4, 5, which includes two side members 4 and rear transverse member 5, is adapted to be secured underneath the floor of a caravan or the like. *Id.* at 1:51–58. Step 6 is mounted on a pair of cranked side members 7, which are pivotally connected to a pair of links 8, the upper ends of which

are pivotally connected to side members 4 of the frame. *Id.* at 1:59–66. The rear end of each of the cranked side members is pivotally connected to second link 9, the other end of which is pivotally connected to side member 4 of the frame. *Id.* at 1:66–70. One end of tension spring 10 is connected to cranked side member 7, and the other end is connected to side member 4. *Id.* at 1:71–75.

In the retracted position shown in Figure 3, step 6 is located beneath the door threshold. *Id.* at 1:76–78. A slight downward pressure from the front of the step is necessary to cause links 8, 9 to move about their pivots and, under the action of tension springs 10, cause the step to move forward into the extended position shown in Figure 2. *Id.* at 1:78–84. To return the step to its retracted position, a slightly forward pressure at the front edge of step 6 will cause the retraction to be effected under the action of tension springs 10. *Id.* at 1:84–89.

*2. Dean (Ex. 1007)*

Dean "generally relates to a retractable running board for a vehicle such as a pick up truck or a van." Ex. 1007, 1:8–9. Figures 1 and 2 of Dean are set forth below.

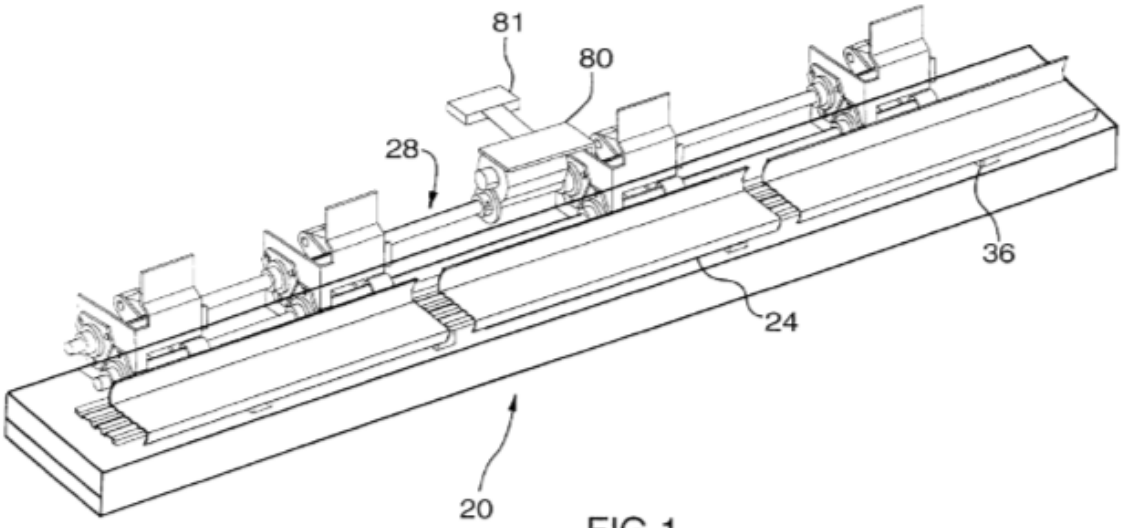


FIG.1

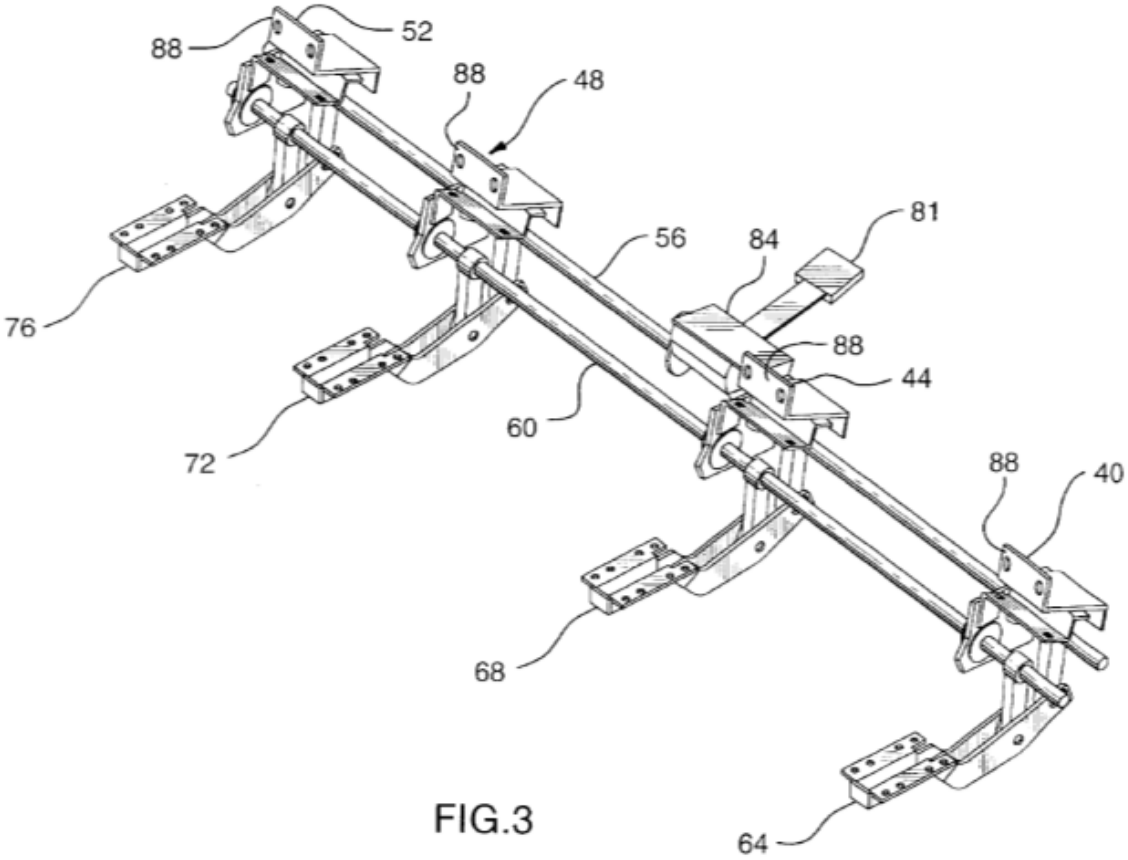


FIG.3

Figure 1 is a perspective view of the retractable running board in the retracted position, and Figure 3 is a perspective view of the retractable running board mechanism in the extended position. *Id.* at 2:51–53, 56–57.

As shown in Figure 1, board 20 comprises step 24 and retracting mechanism 28. *Id.* at 3:8–10. As shown in Figure 2, retracting mechanism 28 includes mounting brackets 40, 44, 48, 52 for attachment to a vehicle underbody, first shaft 56, second shaft 60, and pivot arm assemblies 64, 68, 72, 76. *Id.* at 3:20–23, 53–55. Together, first shaft 56, second shaft 60, and pivot arm assemblies 64, 68, 72, 76 form a parallel linkage connecting mounting brackets 40, 44, 48, 52 to step 24. *Id.* at 3:23–25. Motor 80 is mounted to bracket 44 and drivingly engages first shaft 56 to move retracting mechanism 28 between retracted and extended positions. *Id.* at 3:44–50.

Pivot arm assembly 64 is shown in Figure 4, reproduced below.

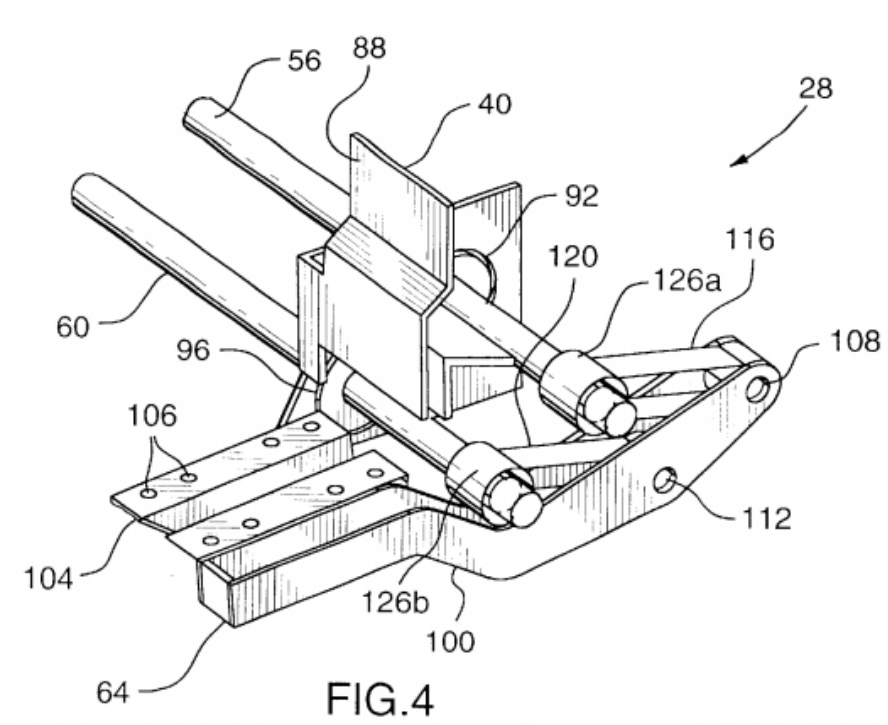

FIG.4

Figure 4 is a perspective view of a motor and pivot arm assembly of the retractable running board. *Id.* at 2:58–60. Pivot arm assembly 64 comprises arm 100 having step mount 104 at one end and elbows 108, 112 at the

opposite end. *Id.* at 3:64–66. Pivot link 116 is pivotally mounted to a pin housed within elbow 108 at one end, and is affixed to first shaft 56 at its opposite end. *Id.* at 4:5–7. Similarly, pivot link 120 is pivotally mounted to a pin housed within elbow 112 at one end, and is affixed to second shaft 60 at its opposite end. *Id.* at 4:7–9.

*3. Norton (Ex. 1008)*

Norton "explore[s] the topics of kinematics and dynamics of machinery in respect to the synthesis of mechanisms in order to accomplish desired motions or tasks, and also the analysis of mechanisms in order to determine their rigid-body dynamic behavior." Ex. 1008, 3 (emphasis omitted). According to Norton, it is important to check that a "linkage can in fact reach all of the specified design positions without encountering a limit or toggle position, also called a stationary configuration." *Id.* at 80 (emphasis omitted). Norton further teaches that in certain circumstances, the toggle is very useful in that "[i]t can provide a self-locking feature when a linkage is moved slightly beyond the toggle position against a fixed stop." *Id.* at 81. An example of such a toggle linkage is shown in Figure 3-2, reproduced below.

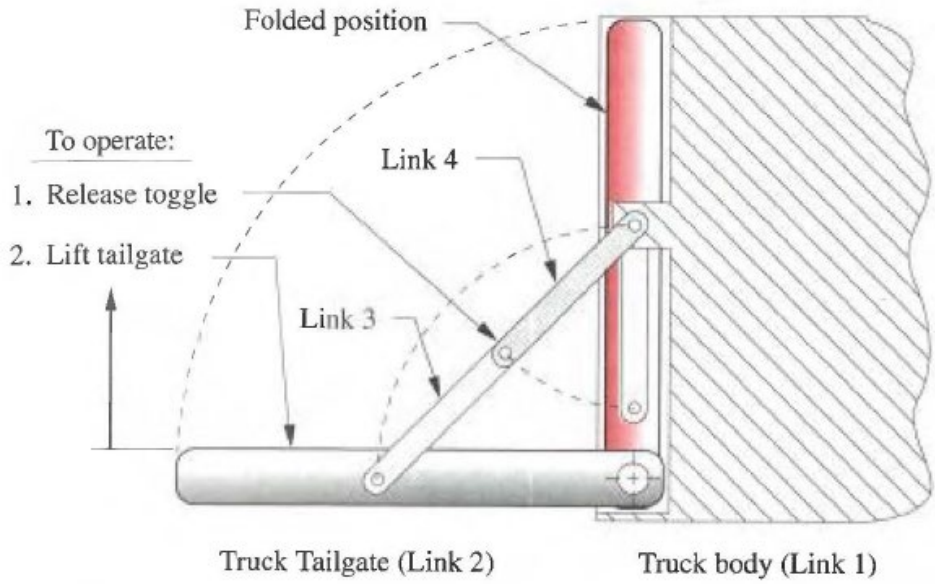


FIGURE 3-2
Deltoid toggle linkage used to control truck tailgate motion

Figure 3-2 shows a special-case Grashof linkage in the deltoid configuration, which provides a locking toggle position when open, and folds on top of itself when closed, to save space. *Id.*

Norton further teaches a "rock-crusher" toggle mechanism, as shown in Figure 6-11, reproduced below.

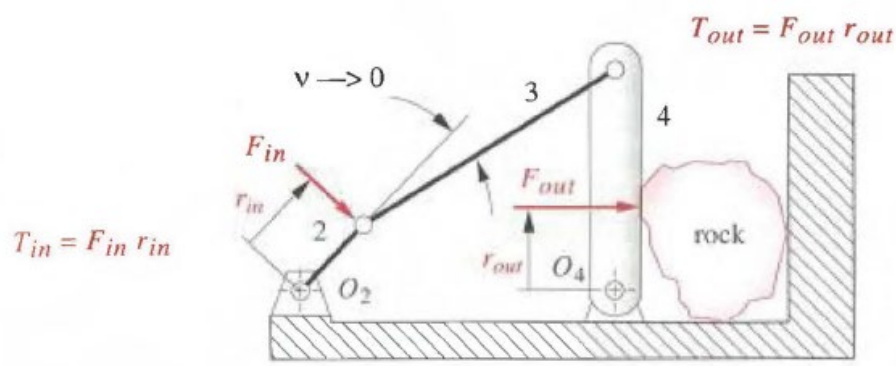


FIGURE 6-11
"Rock-crusher" toggle mechanism

Figure 6-11 shows a "rock-crusher" toggle mechanism. *Id.* at 261. Per Norton, "when angle ν goes to zero (which it can and does, twice per cycle

in a Grashof linkage), the mechanical advantage becomes infinite!" *Id.* Accordingly, "[a] quite moderate force applied to link 2 can generate a huge force on link 4 to crush the rock." *Id.*

## III. ANALYSIS

### *A. Level of Ordinary Skill in the Art*

Petitioner asserts a person of ordinary skill in the art "would have possessed at least a Bachelor's degree in mechanical engineering and at least one year of mechanical design experience in the area of mechanisms and linkages." Pet. 18 (citing Ex. 1002 ¶ 29). Patent Owner similarly argues a person of ordinary skill in the art "would have had a bachelor's degree in mechanical engineering or other similar type of engineering degree, combined with at least one year of experience in the field of mechanical design or relevant product design experience." PO Resp. 13 (citing Ex. 2001 ¶¶ 25–27). Patent Owner further argues the difference between Petitioner's proposed level of ordinary skill and that of Patent Owner "is immaterial to deciding the issues raised by the Petition." *Id.*

Upon consideration of the record, including Matthews, Dean, and Norton, we agree with Patent Owner that the difference between Petitioner's and Patent Owner's respective explanations of the level of ordinary skill in the art is inconsequential to considering Petitioner's asserted grounds of unpatentability. Our assessment of the merits of this proceeding would be the same under both of the proffered explanations, and, therefore, it is unnecessary to adopt one explanation of the level of ordinary skill in the art over the other.

*B. Claim Construction*

We interpret the claims of an unexpired patent using the broadest reasonable interpretation in light of the specification. 37 C.F.R. § 42.100(b) (2018); *see also Cuozzo Speed Techs., LLC v. Lee*, 136 S. Ct. 2131, 2144–46 (2016) (upholding the use of the broadest reasonable interpretation standard).[4] Under this standard, we generally give a claim term its ordinary and customary meaning, as would be understood by one of ordinary skill in the art in the context of the entire disclosure. *In re Translogic Tech., Inc.*, 504 F.3d 1249, 1257 (Fed. Cir. 2007). Furthermore, we expressly construe terms only to the extent necessary to determine whether Petitioner has shown the challenged claims to be unpatentable. *See Nidec Motor Corp. v. Zhongshan Broad Ocean Motor Co.*, 868 F.3d 1013, 1017 (Fed. Cir. 2017) ("[W]e need only construe terms 'that are in controversy, and only to the extent necessary to resolve the controversy.'" (quoting *Vivid Techs., Inc. v. Am. Sci. & Eng'g, Inc.*, 200 F.3d 795, 803 (Fed. Cir. 1999))).

*1. "self-energizing"*

Petitioner proposes a construction for the term "self-energizing." Pet. 23–25; Reply 2–6. Patent Owner disagrees with Petitioner's construction, and proffers its own construction. PO Resp. 14–18;

[4] The Petition in this proceeding was filed on September 18, 2018, prior to the effective date of a rule change that replaces the broadest reasonable interpretation standard with the federal court claim interpretation standard. *See* Changes to the Claim Construction Standard for Interpreting Claims in Trial Proceedings Before the Patent Trial and Appeal Board, 83 Fed. Reg. 51340 (Oct. 11, 2018) (codified at 37 C.F.R. § 42.100(b) (2019)) (amending 37 C.F.R. § 42.100(b) effective Nov. 13, 2018).

Sur-Reply 2–5. This term, however, does not require an express construction to determine whether Petitioner has shown the challenged claims to be unpatentable.

*2. "flange" and "retain and straddle"*

Petitioner argues "flange" means "a rib or rim for attachment to another object." Pet. 18 (citing Ex. 1002 ¶ 390); Reply 6. According to Petitioner, its construction is the result of modifying slightly the dictionary definition of the term based on the use of the term in the Specification of the '751 patent. Pet. 19–20 (citing Ex. 1001, 20:22–58, Fig. 9; Ex. 1002 ¶¶ 392–394; Ex. 1010, 442[5]).

Petitioner also argues "retain and straddle" means "connect on both sides to." *Id.* at 21 (citing Ex. 1002 ¶ 395); Reply 6. Petitioner asserts that the Specification of the '751 supports its construction. Pet. 21–23 (citing Ex. 1001, 20:22–58, Fig. 9; Ex. 1002 ¶¶ 396–397).

Patent Owner disagrees with Petitioner's constructions for "flange" and "retain and straddle," but does not propose constructions for these terms. PO Resp. 14. Rather, Patent Owner asserts that "it is not necessary to address these constructions here because Patent Owner sets forth herein independent reasons to deny Petitioner's grounds." *Id.*

Petitioner points to both intrinsic and extrinsic evidence in support of its proposed constructions of the noted terms. Pet. 18–23. In that respect,

[5] Exhibit 1010 is an excerpt from Merriam-Webster's Collegiate Dictionary (10th ed. 1993). The exhibit itself does not include page numbering separate from the original page numbering of the dictionary, and the citation to this exhibit refers to the page of the dictionary.

Petitioner relies on specific content of the Specification of the ’751 patent as well as the testimony of Dr. Delson. *Id.* We conclude that Petitioner’s proposed constructions have ample support in the record, and note that Patent Owner does not justify the basis for its disagreement of those constructions. We, therefore, adopt Petitioner’s constructions for the terms “flange” and “retain and straddle.”

### *C. Obviousness Based on Matthews and Dean*

Petitioner challenges claims 1–13 of the ’751 patent under 35 U.S.C. § 103(a), and asserts the subject matter of these claims would have been obvious over the combined teachings of Matthews and Dean. Pet. 26–63; Reply 7–12, 15–25. Patent Owner disagrees with Petitioner’s contentions, and argues secondary considerations of nonobviousness confirm the claimed subject matter would not have been obvious. PO Resp. 19–50, 56–67; Sur-Reply 5–14, 17–24.

#### *1. Independent claim 1*

Independent claim 1 recites, in pertinent part:

> the stepping platform linkage having a straddling segment located on an end opposite the stepping platform, wherein the straddling segment comprises two flanges spaced apart at a width greater than a width of the at least one of the plurality of support linkages, the two flanges being configured to retain and straddle one end of the at least one of the plurality of support linkages.

Ex. 1001, 34:36–43.

In its Petition, Petitioner argues each of Matthews and Dean discloses the recited straddling segment. Pet. 44–48. In regard to Matthews, Petitioner contends a portion of each of Matthews’s cranked member 7,

namely the portion extending from the intermittent point where outer link 8 is attached to the rear end where inner link 9 is attached, discloses the recited straddling segment. *Id.* at 44 (citing Ex. 1002 ¶ 441; Ex. 1006, 1:32–34, 59–70). Petitioner's annotated version of Matthews's Figure 1, reproduced below, identifies the portion of each cranked member 7 that Petitioner relies on for disclosing the recited straddling segment. *Id.*

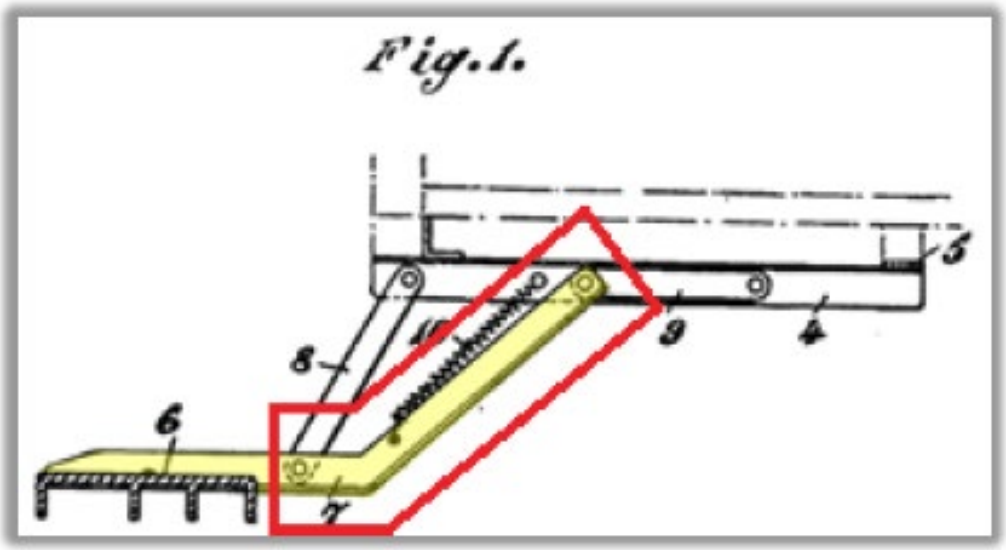


Petitioner annotated Matthews's Figure 1, which is a side elevation of the retractable step, to show cranked member 7 in yellow, and to have a red box around the rearward portion of cranked member 7 between links 8, 9, which Petitioner argues discloses the recited straddling segment. *Id.*; Ex. 1006, 1:43–45.

With respect to Dean, Petitioner argues arm 100 also teaches the recited straddling segment. Pet. 44–48 (citing Ex. 1002 ¶¶ 442, 446–449; Ex. 1007, 3:64–4:4, Fig. 4; Ex. 1011, 114–16). In particular, Petitioner contends arm 100 connects to pivot links 116, 120 on both sides of the links. *Id.* at 47 (citing Ex. 1002 ¶ 447). Petitioner's annotated version of Dean's

Figure 4, reproduced below, shows arm 100 and pivot links 116, 120. *Id.* at 46.

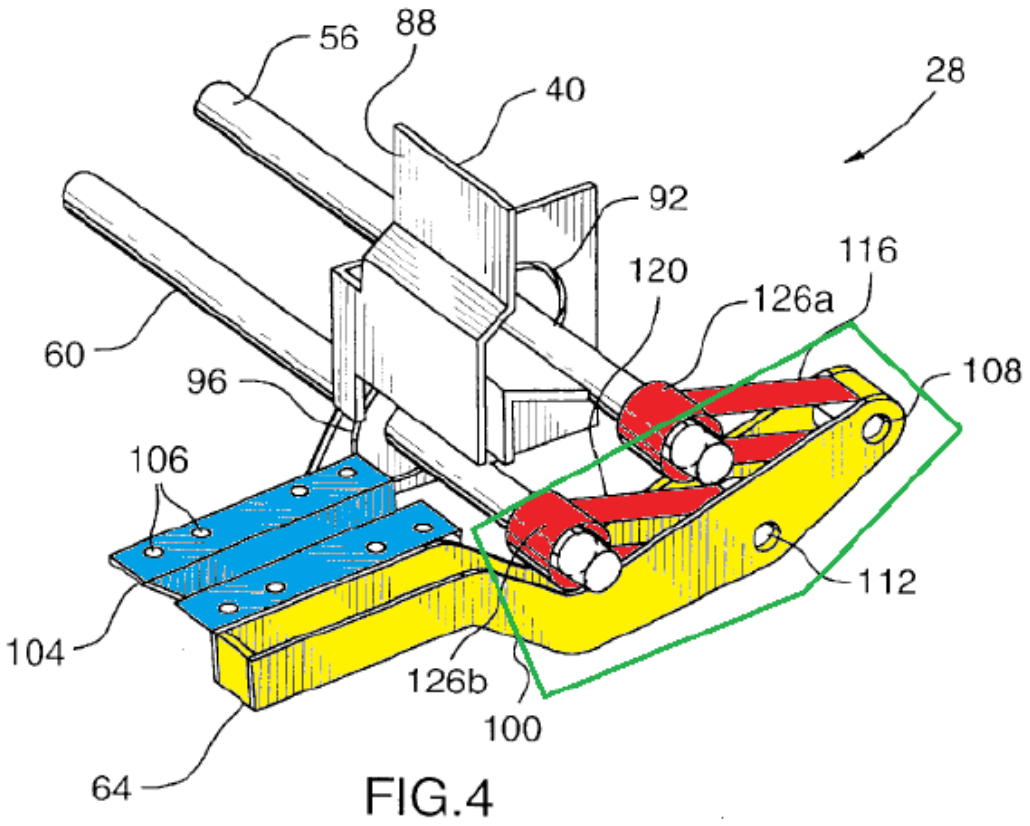


**Fig. 4 (Annotated in Color) of Dean**

Petitioner annotated Dean's Figure 4, which is a perspective view of the pivot arm assembly, to show arm 100 in yellow and links 116, 120 in red and to include a green box around the portion of support arm 100 that Petitioner relies on for teaching the recited straddling segment. *Id.* at 45–46; Ex. 1007, 2:58–60. As shown in the annotated figure, links 116, 120 are received within arm 100 such that arm 100 is attached to both sides of links 116, 120.

In view of Petitioner's argument that Dean discloses the recited straddling segment, Petitioner further contends it would have been obvious

to combine the teachings of Matthews and Dean. Pet. 47–48. Petitioner asserts:

> Matthews['s] Figures 1 and 3 already teach that the Matthews'[s] "cranked members" should be set wider than the Matthews "pair of links." Dean's figures make this feature more obvious, but it is merely consistent and compatible with what was already disclosed in Matthews decades earlier, which leads to a predictable solution to the same problem of providing a secure linking of the step to the pivot links.

*Id.* (citing Ex. 1002 ¶ 450).

Although, in its Petition, Petitioner contends Matthews alone discloses the recited straddling segment, in its Reply, Petitioner expressly states that it no longer maintains this contention. Reply 15 ("Petitioner understands that the Institution Decision establishes that Matthews ***alone*** does not teach the 'straddling segment.' Paper 7 at 21–26. Petitioner no longer makes that contention."). Petitioner acknowledges that Matthews's Figures 1 and 3 are internal views showing that each cranked member 7 is attached to only the inside of links 8, 9 such that cranked members 7 do not retain and straddle links 8, 9. *Id.* at 16 ("Petitioner acknowledges the 'crosshatch indicating that side view is taken' internally as discussed in the Board's Institution Decision, meaning 'cranked member 7 [is] secured to the ***inside*** of links 8,9.'" (quoting Paper 7, 25)).

Petitioner nonetheless maintains that the combination of Matthews and Dean as originally presented in the Petition would have resulted in the recited straddling segment . *Id.* at 15–16 (citing Pet. 44–48; Ex. 1002 ¶ 446). Petitioner also argues:

> even if the Matthews side-view Figures 1 and 3 are deemed to be internal views, those figures are still useful in establishing motivation to combine Matthews with Dean, because those

> figures demonstrate ***how*** Matthews could be modified to implement a "straddling segment" if those figures are interpreted to be external views, as originally understood by Petitioner and its expert Dr. Delson.

*Id.* at 16 (citing Ex. 1014 ¶ 70; Ex. 2010, 100:1–104:16). According to Petitioner, when Matthews's Figures 1 and 3 are interpreted as external views, they show how cranked member 7 could be attached to outside of links 8, 9. *Id.* at 16–17 (citing Pet. 48; Ex. 1041 ¶¶ 71, 75).

Patent Owner argues Petitioner has not demonstrated persuasively that a person of ordinary skill in the art would have modified Matthews's disclosure to include the recited straddling segment. PO Resp. 33–45 (citing Ex. 1006, 1:51–55, 84–89; Ex. 1007, 3:3–9, 43–49, 5:1–6, 4:37–46; Ex. 2001 ¶¶ 56–67, 69–77; Ex. 2010, 48:14–49:13, 54:22–57:18, 61:15–63:3, 65:1–20, 66:16–67:7, 84:14–85:10, 101:19–102:19, 107:5–108:19, 111:13–113:4, 114:5–118:13, 126:5–129:1; Ex. 2011 ¶¶ 4–5, 7); Sur-Reply 17–19. In particular, Patent Owner contends "Petitioner's new arguments and its original arguments must fail because they lack a motivation, arguing only that Matthews and Dean are very similar and both disclose linkages with straddling segments, which is incorrect." Sur-Reply 18.

We agree with Patent Owner that Petitioner's reasoning for combining the teachings of Matthews and Dean to result in the recited straddling segment is based on the similarities between the steps disclosed therein. With specific reference to the recited straddling segment, Petitioner argues that a person of ordinary skill in the art would have combined the teachings of Matthew and Dean to result in the recited straddling segment, because both Matthews and Dean teach straddling segments, i.e., cranked members 7

and arm 100, respectively, set wider than a pair of links. Pet. 47 ("Matthews['s] Figures 1 and 3 already teach that the Matthews'[s] 'cranked members' should be set wider than the Matthews 'pair of links.' Dean's figures make this feature more obvious, but it is merely consistent and compatible with what was already disclosed in Matthews decades earlier . . . ." (citing Ex. 1002 ¶ 450)). As set forth above, however, Petitioner admits Matthews's cranked members 7 are attached to the inside of links 8, 9, and therefore are not set wider than the links. Reply 16 ("Petitioner acknowledges the 'crosshatch indicating that side view is taken' internally as discussed in the Board's Institution Decision, meaning 'cranked member 7 [is] secured to the ***inside*** of links 8,9.'" (quoting Paper 7, 25)).

Petitioner also contends that a person of ordinary skill in the art would have combined the teachings of Matthews and Dean in view of the global similarities between the steps disclosed therein. Namely, Petitioner asserts:

> The teachings in Matthews and Dean regarding the similarly constructed retractable four-bar linkages to achieve nearly identical retracted and extended step positions for the common goal for providing access to a vehicle provide detailed and specific technical guidance, reasons or motivations to a [person of ordinary skill in the art] to combine Matthews with Dean. Specifically, Matthews and Dean disclose the same mechanical design for a retractable step using a common four-bar linkage, except Dean added a motor almost forty years later.

Pet. 31; *see also* Ex. 1002 ¶ 409 ("In my opinion, a [person of ordinary skill in the art] would have been motivated to combine Matthews with Dean because Matthews and Dean disclose the same mechanical design for a retractable step, except Dean added a motor almost forty years later.").

These similarities, however, do not explain why a person would have combined the teachings of Matthews and Dean as Petitioner proposes.

Petitioner confirms in its Reply that it is proposing to modify Matthews's disclosure so that each of cranked members 7 is attached to the outside of each pair of links 8, 9. Reply 16–17, 19; *see also* Tr. 12:1–3 ("[T]he linkage that extends as element 7 could be on the outside of the other linkages 8 and 9 which is really the crux of the straddling segment. Instead of being on the inside, it's on the outside."). In order for the step resulting from Petitioner's proposed combination of Matthews and Dean to retain and straddle at least one of links 8, 9, in accordance with Petitioner's construction of "retain and straddle" as "connect on both sides to" (Pet. 21), Petitioner proposes to modify Matthews's cranked members 7 to attach to the outside of pair of links 8 and pair of links 9 so that cranked members 7, collectively as a pair, attach to both sides of pair links 8 and pair of links 9.

Petitioner is correct that Matthews and Dean teach retractable steps having similar four-bar linkages. In particular, Matthews's cranked member 7 and Dean's arm 100 appear to be corresponding components in the linkages that differ in how they attach to the other components of the linkage. Matthews's cranked member 7 is attached to only one side of each link 8, 9, whereas Dean's arm 100 straddles each link 116, 120. Ex. 1006, Figs. 1, 3; Ex. 1007, Fig. 4.

Yet, Petitioner is not proposing to simply substitute Matthews's cranked member 7 with Dean's arm 100, or to modify Matthews's disclosed step so that each cranked member 7 straddles each link 8, 9. Instead, Petitioner proposes to combine the teachings of Matthews and Dean so that Matthews's cranked members 7, as a pair, straddle the two pairs of links 8, 9. Neither Petitioner nor Dr. Delson explains adequately why the similarities between Matthews's step and Dean's step convey that a person

of ordinary skill in the art would have combined the teachings of Matthews and Dean as Petitioner proposes. Mere similarity of prior art structures is not a substitute for "articulated reasoning with some rational underpinning" that is necessary "to support the legal conclusion of obviousness." *In re Kahn*, 441 F.3d 977, 988 (Fed. Cir. 2006).

For these reasons, Petitioner has not shown persuasively that a person of ordinary skill in the art would have combined the teachings of Matthews and Dean to result in the straddling segment recited in independent claim 1. As Petitioner has not demonstrated persuasively that the claimed subject matter would have been obvious, we need not weigh Petitioner's evidence of obviousness against Patent Owner's secondary considerations of nonobviousness. *See, e.g.*, *Hamilton Beach Brands, Inc. v. f'real Foods, LLC*, 908 F.3d 1328, 1343 (Fed. Cir. 2018) (holding that it was not necessary to address objective indicia of nonobviousness because the court affirmed the Board's findings regarding the failure of the prior art to teach or suggest all claim limitations). In sum, Petitioner has not proven by a preponderance of the evidence that the subject matter of independent claim 1 would have been obvious over Matthews and Dean.

2. *Independent claims 7 and 13*

Like independent claim 1, each of independent claims 7 and 13 recites:

> the stepping platform linkage having a straddling segment located on an end opposite the stepping platform, wherein the straddling segment comprises two flanges spaced apart at a width greater than a width of the at least one of the plurality of support linkages, the two flanges being configured to retain and straddle one end of the at least one of the plurality of support linkages.

Ex. 1001, 35:21–29, 36:23–30. Petitioner's contentions regarding this limitation of independent claims 7 and 13 are the same as its contentions for the corresponding limitation of independent claim 1. Pet. 59–60 (citing Ex. 1002 ¶¶ 502, 504, 506), 62–63 (citing Ex. 1002 ¶¶ 538, 540, 542). For the same reasons as independent claim 1, Petitioner has not proven by a preponderance of the evidence that the subject matter of independent claims 7 and 13 would have been obvious over Matthews and Dean.

*3. Dependent claims 2–6 and 8–12*

Claims 2–6 depend from independent claim 1, and claims 8–12 depend from independent claim 7. For the reasons discussed above with respect to independent claim 1, Petitioner has not proven by a preponderance of the evidence that the subject matter of claims 2–6 and 8–12 would have been obvious over Matthews and Dean.

*D. Obviousness Based on Matthews, Dean, and Norton*

Petitioner challenges claims 1–6, 10, and 11 of the '751 patent under 35 U.S.C. § 103(a), and asserts the subject matter of these claims would have been obvious over the combined teachings of Matthews, Dean, and Norton. Pet. 63–78. According to Petitioner, "[b]oth Matthews and Dean disclose a four-bar linkage that controls the movement of the retractable step," and "Norton makes clear that a four-bar linkage can make use of these 'toggle' or 'self-locking' positions." *Id.* at 68 (citing Ex. 1002 ¶¶ 557–558; Ex. 1008, 81). Petitioner relies on Norton's teaching of a self-locking toggle in a four-bar linkage to argue that the combination of Matthews, Dean, and Norton would have resulted in the self-energizing limitations of these

claims. *Id.* at 73–76. For the straddling segment recited in independent claims 1 and 7 and claims 2–6, 10, and 11 depending therefrom, however, Petitioner relies on only the combination of Matthews and Dean. *Id.* at 72, 78 (citing Ex. 1002 ¶¶ 580, 582, 584, 618).

Petitioner's asserted ground of unpatentability premised on the combination of Matthews, Dean, and Norton suffers from the same deficiency as its asserted ground based on Matthews and Dean. Namely, Petitioner has not shown persuasively that a person of ordinary skill in the art would have combined the teachings of Matthews and Dean to result in the recited straddling segment. Petitioner, therefore, has not proven by a preponderance of the evidence that the subject matter of claims 1–6, 10, and 11 would have been obvious over Matthews, Dean, and Norton.

## IV. CONCLUSION

| **Claim(s)** | **35 U.S.C. §** | **Reference(s)/Basis** | **Claim(s) Shown Unpatentable** | **Claim(s) Not Shown Unpatentable** |
|---|---|---|---|---|
| 1–13 | 103(a) | Matthews, Dean | | 1–13 |
| 1–6, 10, 11 | 103(a) | Matthews, Dean, Norton | | 1–6, 10, 11 |
| **Overall Outcome** | | | | 1–13 |

## V. ORDER

In consideration of the foregoing, it is:

ORDERED that claims 1–13 of the '751 patent have not been shown to be unpatentable, and

FURTHER ORDERED that, as this is a Final Written Decision, a party seeking judicial review of the Decision must comply with the notice and service requirements of 37 C.F.R. § 90.2.

For PETITIONER:

Bing Ai
John Esterhay
John Schnurer
Kevin Patariu
Fareid Asphahani
PERKINS COIE, LLP
ai-ptab@perkinscoie.com
esterhay-ptab@perkinscoie.com
schnurer@perkinscoie.com
patariu-pta@perkinscoie.com
asphahani-ptab@perkinscoie.com

For PATENT OWNER:

John Sganga
Benjamin Everton
KNOBBE MARTENS
2jbs@knobbe.com
2bje@knobbe.cm