IN THE UNITED STATES DISTRICT COURT
FOR THE DISTRICT OF DELAWARE

ROTHSCHILD MOBILE IMAGING INNOVATIONS, LLC	§	
Plaintiff,	§	**Case 1:14-cv-00617-GMS**
v.	§	**JURY TRIAL DEMANDED**
MITEK SYSTEMS, INC., JPMORGAN CHASE & CO., AND JPMORGAN CHASE BANK, N.A.,	§	
Defendants.	§	

PLAINTIFF'S SECOND AMENDED COMPLAINT
FOR PATENT INFRINGEMENT AND JURY DEMAND

Plaintiff Rothschild Mobile Imaging Innovations, LLC ("RMII"), by and through its undersigned counsel, files this Second Amended Complaint for patent infringement against Defendants Mitek Systems, Inc. ("Mitek"), JPMorgan Chase & Co., and JPMorgan Chase Bank, N.A. (JPMorgan Chase & Co. and JPMorgan Chase Bank N.A. are together referred to as "Chase Bank").

THE PARTIES

1. RMII is a limited liability company having a principal office at 1108 Kane Concourse, Suite 310, Bay Harbor Islands, Florida 33154.

2. On information and belief, Mitek is a Delaware corporation having its principal office at 8911 Balboa Avenue, Suite B, San Diego, California 92123.

3. On information and belief, Mitek does business throughout the United States, including in the State and District of Delaware.

4. On information and belief, JPMorgan Chase & Co. is a Delaware corporation having its principal office at 270 Park Avenue, New York, New York 10017. JPMorgan Chase &

Co.'s registered agent for service of process is CT Corporation System, 111 Eighth Avenue, 13th Floor, New York, New York 10017.

5. On information and belief, JPMorgan Chase Bank, N.A., a wholly-owned subsidiary of JPMorgan Chase & Co., is a federally chartered national banking association with its principal office at 270 Park Avenue, 38th Floor, New York, New York 10017. JPMorgan Chase Bank, N.A. holds itself out as a national bank, subject to the National Bank Act, 12 U.S.C. § 1, *et seq.*, and regulations promulgated by the Office of the Comptroller of the Currency.

6. On information and belief, Chase Bank does business throughout the United States, including in the State and District of Delaware.

JURISDICTION AND VENUE

7. This action arises under the Patent Laws of the United States, 35 U.S.C. §§ 1 *et seq.* This Court has subject matter jurisdiction over this action pursuant to 28 U.S.C. §§ 1331 and 1338(a).

8. This Court has general personal jurisdiction over Defendants in part because Defendants have sufficient minimum contacts with the forum as a result of business conducted within the State and District of Delaware. Upon information and belief, at least Defendants Mitek and JPMorgan Chase & Co. are all incorporated in and under the laws of the State of Delaware.

9. This Court has specific personal jurisdiction over Defendants in part because of Defendants' voluntary conducts in unauthorized making, using, selling, offering to sell within, and/or importing into, the State and District of Delaware, infringing products and services, directly and/or indirectly, including by way of inducement.

10. Upon information and belief, Defendants provide services and sell and/or market products in this District separately, with, and/or for other infringers also incorporated under the laws of the State of Delaware.

11. Venue is proper in this Court under 28 U.S.C. §§ 1391(b), (c) and (d), and 1400(b), because, upon information and belief, at least Defendants Mitek and JPMorgan Chase & Co. are incorporated under the laws of the State of Delaware and are subject to personal jurisdiction in the District of Delaware.

JOINDER UNDER 35 U.S.C. § 299

12. On information and belief, Defendants commercialize, market, and practice certain related and commonly derived mobile imaging products, platforms, and/or services, including but not limited to "Mobile Deposit," "Mobile Photo Bill Pay," "Mobile Photo Account Opening," "Mobile Photo Payments," "Mobile Photo Balance Transfer," "Mobile Photo Account Funding," "Mobile Insurance Quote," "Mobile Imaging Platform," and "Chase Mobile" instrumentalities, software, computer programs, systems, and applications (collectively "Mobile Imaging Instrumentalities").

13. RMII's allegations of patent infringement contained herein are asserted against Defendants jointly, severally, or in the alternative, arise, at least in part, out of the same transactions, occurrences, or series of transactions or occurrences relating to Defendants' making, using, selling, offering for sale, and/or importing in and/or into the United States products, platforms, and/or services involving the same or similar related and commonly derived instrumentalities, including but not limited to the Mobile Imaging Instrumentalities.

14. Questions of fact common to Defendants will arise in the action, including but not limited to questions relating to Defendants' infringing acts relating to the same or similar related

and commonly derived instrumentalities, including but not limited to the Mobile Imaging Instrumentalities.

15. As a result of the foregoing, joinder is proper in this matter under 35 U.S.C. § 299.

THE PATENTS-IN-SUIT

16. United States Patent No. 7,450,163, titled "Device and Method for Embedding and Retrieving Information in Digital Images" ("'163 patent"), was duly and legally issued by the United States Patent and Trademark Office on November 11, 2008, to Leigh M. Rothschild.

17. RMII is the owner of all rights, title, and interest in and under the '163 patent, with full right to bring suit to enforce the patent, including the right to recover for past infringement damages. The '163 patent is valid and enforceable. A true and correct copy of the '163 patent is attached as Exhibit A.

18. United States Patent No. 7,456,872, titled "Device and Method for Embedding and Retrieving Information in Digital Images" ("'872 patent"), was duly and legally issued by the United States Patent and Trademark Office on November 25, 2008, to Leigh M. Rothschild.

19. RMII is the owner of all rights, title, and interest in and under the '872 patent, with full right to bring suit to enforce the patent, including the right to recover for past infringement damages. The '872 patent is valid and enforceable. A true and correct copy of the '872 patent is attached as Exhibit B.

20. United States Patent No. 7,991,792, titled "System and Method for Embedding Symbology in Digital Images and Using the Symbology to Organize and Control the Digital Images" ("'792 patent"), was duly and legally issued by the United States Patent and Trademark Office on August 2, 2011, to Leigh M. Rothschild.

21. RMII is the owner of all rights, title, and interest in and under the ’792 patent, with full right to bring suit to enforce the patent, including the right to recover for past infringement damages. The ’792 patent is valid and enforceable. A true and correct copy of the ’792 patent is attached as Exhibit C.

22. United States Patent No. 7,995,118, titled “Device and Method for Embedding and Retrieving Information in Digital Images” (“’118 patent”), was duly and legally issued by the United States Patent and Trademark Office on August 9, 2011, to Leigh M. Rothschild.

23. RMII is the owner of all rights, title, and interest in and under the ’118 patent, with full right to bring suit to enforce the patent, including the right to recover for past infringement damages. The ’118 patent is valid and enforceable. A true and correct copy of the ’118 patent is attached as Exhibit D.

COUNT I — PATENT INFRINGEMENT OF U.S. PATENT 7,450,163

24. Paragraphs 1 through 23 are incorporated by reference as if fully stated herein.

25. On information and belief, Defendants have been infringing and continue to infringe the ’163 patent under 35 U.S.C. § 271(a) by making, using, selling, offering for sale within, and/or importing into, the United States, the Mobile Imaging Instrumentalities that fall within the scope of one or more claims of the ’163 patent, literally or under the doctrine of equivalents, without authority.

26. Mitek was served with an original complaint and was accused of infringement of the ’163 patent on May 19, 2014, and received additional notice of RMII’s infringement theories on May 29, 2015 (D.I. 56). Mitek thus has had actual knowledge of the ’163 patent since, at least, May 19, 2014. Mitek continues to willfully make, use, sell, and/or offer for sale the Mobile

Imaging Instrumentalities with an objectively reckless disregard of the likelihood of its continued infringement and is liable for willful infringement of the ’163 patent.

27. Upon new information and belief, Chase Bank has had knowledge of the ’163 patent and other related patents and applications since at least as early as January 25, 2013. On that date, Plaintiff sent an email and a summary of the patents to Chase Bank employee Kathlyn Card Beckles to inquire whether Chase Bank had any interest in purchasing the ’163 patent and the other related patents and applications because the portfolio has applicability to services such as mobile banking services. Despite Chase Bank’s actual knowledge of the ’163 patent before the filing of this complaint and knowledge of RMII’s infringement theories on May 29, 2015 (D.I. 56), Chase Bank continues to willfully make, use, sell, and/or offer for sale the Mobile Imaging Instrumentalities with an objectively reckless disregard of the likelihood of its continued infringement and is liable for willful infringement of the ’163 patent.

28. The Court previously dismissed Plaintiff’s willfulness allegations against Mitek and Chase Bank based upon a lack of pre-suit notice. (D.I. 51). Because of the failure to include a dismissed claim of an amended pleading may constitute a waiver of the right to challenge on appeal the basis for dismissal, Plaintiff repleads its willfulness allegations in this Amended Complaint. *See U.S. ex rel. Atkinson v. P.A. Shipbuilding Co.*, 473 F.3d 506 (3d Cir. 2007). Additionally, new facts have come to light illustrating Chase Bank’s pre-suit notice.

29. Additionally, since at least their dates of notice, Defendants, both individually and/or collectively, have actively induced and continue to induce infringement of the ’163 patent, under 35 U.S.C. § 271(b), attributable to any one person and/or entity, including but not limited to each other, banking customers, and/or mobile device users, who make, buy, use, sell, offer for sale, resell, practice, and/or import devices that include Mobile Imaging

Instrumentalities that fall within the scope of one or more claims of the ’163 patent, literally or under the doctrine of equivalents, without authority, within and/or into the United States, including the District of Delaware, and thereby infringe the ’163 patent.

30. Defendants’ acts of active inducement, both individually and/or collectively, have been committed with knowledge, or at least with willful blindness that the induced acts constitute infringement of the ’163 patent. On information and belief, Defendants, both individually and/or collectively, intend to cause, and have taken affirmative steps to induce infringement subject to their direction and control by, *inter alia*, offering websites, software and downloadable applications, especially designed for mobile devices, including iOS and Android mobile devices, and other mobile devices platforms, which allow mobile device users and banking customers to easily capture and upload digital images to Defendants’ servers.

31. Chase Bank’s website can be directly accessed from many mobile devices, which allows the uploading of digital images associated with user information by utilizing the Mobile Imaging Instrumentalities. In addition, Chase Bank provides downloadable applications, which also provide for mobile device users and/or banking customers to upload digital images to Defendants’ servers. Defendants, both individually and collectively, induce mobile device users and/or banking customers to upload digital images by providing easy-to-use platforms and instructions, and Defendants process and store the digital images uploaded to their servers using the associated information provided by their users. As a result, mobile device users and/or banking customers are directed to bank with Chase Bank where they can easily deposit checks by uploading images of those checks to Defendants’ servers, resulting in more mobile device users and/or banking customers banking with Chase Bank, more deposits being made into accounts held by Chase Bank, and increased revenues generated by Chase Bank.

32. Defendants have entered into contractual relationships that require and specify the use and practice of the Mobile Imaging Instrumentalities by mobile device users and/or banking customers in the United States, as covered by one or more claims of the ’163 patent.

33. Defendants additionally provide advertising and marketing of the infringing use of devices that include Mobile Imaging Instrumentalities, creating distribution channels for devices that include Mobile Imaging Instrumentalities within and into the United States, adapting devices that include Mobile Imaging Instrumentalities to conform with United States laws and regulations, and providing instructions and technical support for the installation, use, operation, and maintenance of devices that include Mobile Imaging Instrumentalities in the United States.

34. Upon information and belief, even though Defendants have been aware of the ’163 patent since their dates of notice, Defendants have neither made any changes to the functionality, operations, marketing, sales, technical support, etc. of such products and services to avoid infringing the ’163 patent nor informed their customers or end-users how to avoid infringing the ’163 patent. To date, Defendants have not identified a single action that they have taken to avoid infringement (e.g., by designing around or notifying their customers or end-users how to avoid infringement) by themselves or their customers or end-users since they became aware of the ’163 patent.

35. Upon information and belief, Defendants are unaware of any legal or factual basis that their actions solely, or in combination with the actions of their customers and end-users, do not constitute direct or indirect infringement of the ’163 patent. To date, Defendants have not produced any opinion of counsel, request for opinion of counsel, evaluation, analysis, or investigation relating to the validity, scope, interpretation, construction, enforceability, unenforceability, or the infringement or potential infringement of any claim of the ’163 patent.

Defendants thus have continued to willfully make, use, sell, and/or offer for sale the Mobile Imaging Instrumentalities with an objectively reckless disregard of the likelihood of their continued infringement and are liable for willful infringement of the ’163 patent.

36. As a direct and proximate result of Defendants’ acts of patent infringement, including but not limited to direct infringement and/or indirect infringement, by way of induced infringement, of the ’163 patent, RMII has been and continues to be injured and has sustained and will continue to sustain substantial damages in an amount not presently known.

COUNT II — PATENT INFRINGEMENT OF U.S. PATENT 7,456,872

37. Paragraphs 1 through 23 are incorporated by reference as if fully stated herein.

38. On information and belief, Defendants have been infringing and continue to infringe the ’872 patent under 35 U.S.C. § 271(a) by making, using, selling, offering for sale within, and/or importing into, the United States, the Mobile Imaging Instrumentalities that fall within the scope of one or more claims of the ’872 patent, literally or under the doctrine of equivalents, without authority.

39. Mitek was served with an original complaint and was accused of infringement of the ’872 patent on May 19, 2014, and received additional notice of RMII’s infringement theories on May 29, 2015 (D.I. 56). Mitek thus has had actual knowledge of the ’872 patent since, at least, May 19, 2014. Mitek continues to willfully make, use, sell, and/or offer for sale the Mobile Imaging Instrumentalities with an objectively reckless disregard of the likelihood of its continued infringement and is liable for willful infringement of the ’872 patent.

40. Upon new information and belief, Chase Bank has had knowledge of the ’872 patent and other related patents and applications since at least as early as January 25, 2013. On that date, Plaintiff sent an email and a summary of the patents to Chase Bank employee Kathlyn

Card Beckles to inquire whether Chase Bank had any interest in purchasing the ’872 patent and the other related patents and applications because the portfolio has applicability to services such as mobile banking services. Despite Chase Bank’s actual knowledge of the ’872 patent before the filing of this complaint and knowledge of RMII’s infringement theories on May 29, 2015 (D.I. 56), Chase Bank continues to willfully make, use, sell, and/or offer for sale the Mobile Imaging Instrumentalities with an objectively reckless disregard of the likelihood of its continued infringement and is liable for willful infringement of the ’872 patent.

41. The Court previously dismissed Plaintiff’s willfulness allegations against Mitek and Chase Bank based upon a lack of pre-suit notice. (D.I. 51). Because of the failure to include a dismissed claim of an amended pleading may constitute a waiver of the right to challenge on appeal the basis for dismissal, Plaintiff repleads its willfulness allegations in this Amended Complaint. *See U.S. ex rel. Atkinson v. P.A. Shipbuilding Co.*, 473 F.3d 506 (3d Cir. 2007). Additionally, new facts have come to light illustrating Chase Bank’s pre-suit notice.

42. Additionally, since at least their dates of notice, Defendants, both individually and/or collectively, have actively induced and continue to induce infringement of the ’872 patent, under 35 U.S.C. § 271(b), attributable to any one person and/or entity, including but not limited to each other, banking customers, and/or mobile device users, who make, buy, use, sell, offer for sale, resell, practice, and/or import devices that include Mobile Imaging Instrumentalities that fall within the scope of one or more claims of the ’872 patent, literally or under the doctrine of equivalents, without authority, within and/or into the United States, including the District of Delaware, and thereby infringe the ’872 patent.

43. Defendants’ acts of active inducement, both individually and/or collectively, have been committed with knowledge, or at least with willful blindness that the induced acts

constitute infringement of the ’872 patent. On information and belief, Defendants, both individually and/or collectively, intend to cause, and have taken affirmative steps to induce infringement subject to their direction and control by, *inter alia*, offering websites, software and downloadable applications, especially designed for mobile devices, including iOS and Android mobile devices, and other mobile devices platforms, which allow mobile device users and banking customers to easily capture and upload digital images to Defendants’ servers.

44. Chase Bank’s website can be directly accessed from many mobile devices, which allows the uploading of digital images associated with user information by utilizing the Mobile Imaging Instrumentalities. In addition, Chase Bank provides downloadable applications, which also provide for mobile device users and/or banking customers to upload digital images to Defendants’ servers. Defendants, both individually and collectively, induce mobile device users and/or banking customers to upload digital images by providing easy-to-use platforms and instructions, and Defendants process and store the digital images uploaded to their servers using the associated information provided by their users. As a result, mobile device users and/or banking customers are directed to bank with Chase Bank where they can easily deposit checks by uploading images of those checks to Defendants’ servers, resulting in more mobile device users and/or banking customers banking with Chase Bank, more deposits being made into accounts held by Chase Bank, and increased revenues generated by Chase Bank.

45. Defendants have entered into contractual relationships that require and specify the use and practice of the Mobile Imaging Instrumentalities by mobile device users and/or banking customers in the United States, as covered by one or more claims of the ’872 patent.

46. Defendants additionally provide advertising and marketing of the infringing use of devices that include Mobile Imaging Instrumentalities, creating distribution channels for

devices that include Mobile Imaging Instrumentalities within and into the United States, adapting devices that include Mobile Imaging Instrumentalities to conform with United States laws and regulations, and providing instructions and technical support for the installation, use, operation, and maintenance of devices that include Mobile Imaging Instrumentalities in the United States.

47. On information and belief, since at least the date of notice, Mitek has actively induced infringement of the ’872 patent, under 35 U.S.C. § 271 (b), attributable to Chase Bank, who performs the infringing methods executed by and through the Mobile Imaging Instrumentalities that fall within the scope of one or more claims of the ’872 patent, literally or under the doctrine of equivalents, without authority, within and/or into the United States, including the District of Delaware, and thereby infringe the ’872 patent. Chase Bank’s alleged acts of direct infringement of the ’872 patent is subject to the direction and control of Mitek, for example, by offering, selling, instructing, developing, and/or providing the Mobile Imaging Instrumentalities that allow Chase Bank to offer websites, software and downloadable applications, especially designed for mobile devices, including iOS and Android mobile devices, and other mobile devices platforms, which allow mobile device users and/or banking customers to easily capture and upload digital images containing information associated with the images to Defendants’ servers. Defendants have entered into contractual relationships that require and specify the use and practice of the Mobile Imaging Instrumentalities by one or more entities in the United States, as covered by one or more claims of the ’872 patent.

48. Upon information and belief, even though Defendants have been aware of the ’872 patent since their dates of notice, Defendants have neither made any changes to the functionality, operations, marketing, sales, technical support, etc. of such products and services to avoid infringing the ’872 patent nor informed their customers or end-users how to avoid

infringing the ’872 patent. To date, Defendants have not identified a single action that they have taken to avoid infringement (e.g., by designing around or notifying their customers or end-users how to avoid infringement) by themselves or their customers or end-users since they became aware of the ’872 patent.

49. Upon information and belief, Defendants are unaware of any legal or factual basis that their actions solely, or in combination with the actions of their customers and end-users, do not constitute direct or indirect infringement of the ’872 patent. To date, Defendants have not produced any opinion of counsel, request for opinion of counsel, evaluation, analysis, or investigation relating to the validity, scope, interpretation, construction, enforceability, unenforceability, or the infringement or potential infringement of any claim of the ’872 patent. Defendants thus have continued to willfully make, use, sell, and/or offer for sale the Mobile Imaging Instrumentalities with an objectively reckless disregard of the likelihood of their continued infringement and are liable for willful infringement of the ’872 patent.

50. As a direct and proximate result of Defendants’ acts of patent infringement, including but not limited to direct infringement and/or indirect infringement, by way of induced infringement, of the ’872 patent, RMII has been and continues to be injured and has sustained and will continue to sustain substantial damages in an amount not presently known.

COUNT III — PATENT INFRINGEMENT OF U.S. PATENT 7,991,792

51. Paragraphs 1 through 23 are incorporated by reference as if fully stated herein.

52. On information and belief, Defendants have been infringing and continue to infringe the ’792 patent under 35 U.S.C. § 271(a) by making, using, selling, offering for sale within, and/or importing into, the United States, the Mobile Imaging Instrumentalities that fall

within the scope of one or more claims of the ’792 patent, literally or under the doctrine of equivalents, without authority.

53. Mitek was served with an original complaint and was accused of infringement of the ’792 patent on May 19, 2014, and received additional notice of RMII’s infringement theories on May 29, 2015 (D.I. 56). Mitek thus has had actual knowledge of the ’792 patent since, at least, May 19, 2014. Mitek continues to willfully make, use, sell, and/or offer for sale the Mobile Imaging Instrumentalities with an objectively reckless disregard of the likelihood of its continued infringement and is liable for willful infringement of the ’792 patent.

54. Upon new information and belief, Chase Bank has had knowledge of the ’792 patent and other related patents and applications since at least as early as January 25, 2013. On that date, Plaintiff sent an email and a summary of the patents to Chase Bank employee Kathlyn Card Beckles to inquire whether Chase Bank had any interest in purchasing the ’792 patent and the other related patents and applications because the portfolio has applicability to services such as mobile banking services. Despite Chase Bank’s actual knowledge of the ’792 patent before the filing of this complaint and knowledge of RMII’s infringement theories on May 29, 2015 (D.I. 56), Chase Bank continues to willfully make, use, sell, and/or offer for sale the Mobile Imaging Instrumentalities with an objectively reckless disregard of the likelihood of its continued infringement and is liable for willful infringement of the ’792 patent.

55. The Court previously dismissed Plaintiff’s willfulness allegations against Mitek and Chase Bank based upon a lack of pre-suit notice. (D.I. 51). Because of the failure to include a dismissed claim of an amended pleading may constitute a waiver of the right to challenge on appeal the basis for dismissal, Plaintiff repleads its willfulness allegations in this Amended

Complaint. *See U.S. ex rel. Atkinson v. P.A. Shipbuilding Co.*, 473 F.3d 506 (3d Cir. 2007). Additionally, new facts have come to light illustrating Chase Bank's pre-suit notice.

56. Additionally, since at least their dates of notice, Defendants, both individually and/or collectively, have actively induced and continue to induce infringement of the '792 patent, under 35 U.S.C. § 271(b), attributable to any one person and/or entity, including but not limited to each other, banking customers, and/or mobile device users, who make, buy, use, sell, offer for sale, resell, practice, and/or import devices that include Mobile Imaging Instrumentalities that fall within the scope of one or more claims of the '792 patent, literally or under the doctrine of equivalents, without authority, within and/or into the United States, including the District of Delaware, and thereby infringe the '792 patent.

57. Defendants' acts of active inducement, both individually and/or collectively, have been committed with knowledge, or at least with willful blindness that the induced acts constitute infringement of the '792 patent. On information and belief, Defendants, both individually and/or collectively, intend to cause, and have taken affirmative steps to induce infringement subject to their direction and control by, *inter alia*, offering websites, software and downloadable applications, especially designed for mobile devices, including iOS and Android mobile devices, and other mobile devices platforms, which allow mobile device users and banking customers to easily capture and upload digital images to Defendants' servers.

58. Chase Bank's website can be directly accessed from many mobile devices, which allows the uploading of digital images associated with user information by utilizing the Mobile Imaging Instrumentalities. In addition, Chase Bank provides downloadable applications, which also provide for mobile device users and/or banking customers to upload digital images to Defendants' servers. Defendants, both individually and collectively, induce mobile device users

and/or banking customers to upload digital images by providing easy-to-use platforms and instructions, and Defendants process and store the digital images uploaded to their servers using the associated information provided by their users. As a result, mobile device users and/or banking customers are directed to bank with Chase Bank where they can easily deposit checks by uploading images of those checks to Defendants' servers, resulting in more mobile device users and/or banking customers banking with Chase Bank, more deposits being made into accounts held by Chase Bank, and increased revenues generated by Chase Bank.

59. Defendants have entered into contractual relationships that require and specify the use and practice of the Mobile Imaging Instrumentalities by mobile device users and/or banking customers in the United States, as covered by one or more claims of the '792 patent.

60. Defendants additionally provide advertising and marketing of the infringing use of devices that include Mobile Imaging Instrumentalities, creating distribution channels for devices that include Mobile Imaging Instrumentalities within and into the United States, adapting devices that include Mobile Imaging Instrumentalities to conform with United States laws and regulations, and providing instructions and technical support for the installation, use, operation, and maintenance of devices that include Mobile Imaging Instrumentalities in the United States.

61. On information and belief, since at least the date of notice, Mitek has actively induced infringement of the '792 patent, under 35 U.S.C. § 271 (b), attributable to Chase Bank, who performs the infringing methods executed by and through the Mobile Imaging Instrumentalities that fall within the scope of one or more claims of the '872 patent, literally or under the doctrine of equivalents, without authority, within and/or into the United States, including the District of Delaware, and thereby infringe the '872 patent. Chase Bank's alleged acts of direct infringement of the '872 patent is subject to the direction and control of Mitek, for

example, by offering, selling, instructing, developing, and/or providing the Mobile Imaging Instrumentalities that allow Chase Bank to offer websites, software and downloadable applications, especially designed for mobile devices, including iOS and Android mobile devices, and other mobile devices platforms, which allow mobile device users and/or banking customers to easily capture and upload digital images containing information associated with the images to Defendants' servers. Defendants have entered into contractual relationships that require and specify the use and practice of the Mobile Imaging Instrumentalities by one or more entities in the United States, as covered by one or more claims of the '872 patent.

62. Upon information and belief, even though Defendants have been aware of the '792 patent since their dates of notice, Defendants have neither made any changes to the functionality, operations, marketing, sales, technical support, etc. of such products and services to avoid infringing the '792 patent nor informed their customers or end-users how to avoid infringing the '792 patent. To date, Defendants have not identified a single action that they have taken to avoid infringement (e.g., by designing around or notifying their customers or end-users how to avoid infringement) by themselves or their customers or end-users since they became aware of the '792 patent.

63. Upon information and belief, Defendants are unaware of any legal or factual basis that their actions solely, or in combination with the actions of their customers and end-users, do not constitute direct or indirect infringement of the '792 patent. To date, Defendants have not produced any opinion of counsel, request for opinion of counsel, evaluation, analysis, or investigation relating to the validity, scope, interpretation, construction, enforceability, unenforceability, or the infringement or potential infringement of any claim of the '792 patent. Defendants thus have continued to willfully make, use, sell, and/or offer for sale the Mobile

Imaging Instrumentalities with an objectively reckless disregard of the likelihood of their continued infringement and are liable for willful infringement of the ’792 patent.

64. As a direct and proximate result of Defendants’ acts of patent infringement, including but not limited to direct infringement and/or indirect infringement, by way of induced infringement, of the ’792 patent, RMII has been and continues to be injured and has sustained and will continue to sustain substantial damages in an amount not presently known.

COUNT IV — PATENT INFRINGEMENT OF U.S. PATENT 7,995,118

65. Paragraphs 1 through 23 are incorporated by reference as if fully stated herein.

66. On information and belief, Defendants have been infringing and continue to infringe the ’118 patent under 35 U.S.C. § 271(a) by making, using, selling, offering for sale within, and/or importing into, the United States, the Mobile Imaging Instrumentalities that fall within the scope of one or more claims of the ’118 patent, literally or under the doctrine of equivalents, without authority.

67. Mitek was served with an original complaint and was accused of infringement of the ’118 patent on May 19, 2014, and received additional notice of RMII’s infringement theories on May 29, 2015 (D.I. 56). Mitek thus has had actual knowledge of the ’118 patent since, at least, May 19, 2014. Mitek continues to willfully make, use, sell, and/or offer for sale the Mobile Imaging Instrumentalities with an objectively reckless disregard of the likelihood of its continued infringement and is liable for willful infringement of the ’118 patent.

68. Upon new information and belief, Chase Bank has had knowledge of the ’118 patent and other related patents and applications since at least as early as January 25, 2013. On that date, Plaintiff sent an email and a summary of the patents to Chase Bank employee Kathlyn Card Beckles to inquire whether Chase Bank had any interest in purchasing the ’118 patent and

the other related patents and applications because the portfolio has applicability to services such as mobile banking services. Despite Chase Bank's actual knowledge of the '118 patent before the filing of this complaint and knowledge of RMII's infringement theories on May 29, 2015 (D.I. 56), Chase Bank continues to willfully make, use, sell, and/or offer for sale the Mobile Imaging Instrumentalities with an objectively reckless disregard of the likelihood of its continued infringement and is liable for willful infringement of the '118 patent.

69. The Court previously dismissed Plaintiff's willfulness allegations against Mitek and Chase Bank based upon a lack of pre-suit notice. (D.I. 51). Because of the failure to include a dismissed claim of an amended pleading may constitute a waiver of the right to challenge on appeal the basis for dismissal, Plaintiff repleads its willfulness allegations in this Amended Complaint. *See U.S. ex rel. Atkinson v. P.A. Shipbuilding Co.*, 473 F.3d 506 (3d Cir. 2007). Additionally, new facts have come to light illustrating Chase Bank's pre-suit notice.

70. On information and belief, since at least their dates of notice, Defendants, both individually and/or collectively, have actively induced and continue to induce infringement of the '118 patent, under 35 U.S.C. § 271(b), attributable to any one person and/or entity, including but not limited to each other, banking customers, and/or mobile device users, who make, buy, use, sell, offer for sale, resell, practice, and/or import devices that include Mobile Imaging Instrumentalities that fall within the scope of one or more claims of the '118 patent, literally or under the doctrine of equivalents, without authority, within and/or into the United States, including the District of Delaware, and thereby infringe the '118 patent.

71. Defendants' acts of active inducement, both individually and/or collectively, have been committed with knowledge, or at least with willful blindness that the induced acts constitute infringement of the '118 patent. On information and belief, Defendants, both

individually and/or collectively, intend to cause, and have taken affirmative steps to induce infringement subject to their direction and control by, *inter alia*, offering websites, software and downloadable applications, especially designed for mobile devices, including iOS and Android mobile devices, and other mobile devices platforms, which allow mobile device users and banking customers to easily capture and upload digital images to Defendants' servers.

72. Chase Bank's website can be directly accessed from many mobile devices, which allows the uploading of digital images associated with user information by utilizing the Mobile Imaging Instrumentalities. In addition, Chase Bank provides downloadable applications, which also provide for mobile device users and/or banking customers to upload digital images to Defendants' servers. Defendants, both individually and collectively, induce mobile device users and/or banking customers to upload digital images by providing easy-to-use platforms and instructions, and Defendants process and store the digital images uploaded to their servers using the associated information provided by their users. As a result, mobile device users and/or banking customers are directed to bank with Chase Bank where they can easily deposit checks by uploading images of those checks to Defendants' servers, resulting in more mobile device users and/or banking customers banking with Chase Bank, more deposits being made into accounts held by Chase Bank, and increased revenues generated by Chase Bank.

73. Defendants have entered into contractual relationships that require and specify the use and practice of the Mobile Imaging Instrumentalities by mobile device users and/or banking customers in the United States, as covered by one or more claims of the '118 patent.

74. Defendants additionally provide advertising and marketing of the infringing use of devices that include Mobile Imaging Instrumentalities, creating distribution channels for devices that include Mobile Imaging Instrumentalities within and into the United States, adapting

devices that include Mobile Imaging Instrumentalities to conform with United States laws and regulations, and providing instructions and technical support for the installation, use, operation, and maintenance of devices that include Mobile Imaging Instrumentalities in the United States.

75. On information and belief, since at least the date of notice, Mitek has actively induced infringement of the ’118 patent, under 35 U.S.C. § 271 (b), attributable to Chase Bank, who performs the infringing methods executed by and through the Mobile Imaging Instrumentalities that fall within the scope of one or more claims of the ’118 patent, literally or under the doctrine of equivalents, without authority, within and/or into the United States, including the District of Delaware, and thereby infringe the ’118 patent. Chase Bank’s alleged acts of direct infringement of the ’118 patent is subject to the direction and control of Mitek, for example, by offering, selling, instructing, developing, and/or providing the Mobile Imaging Instrumentalities that allow Chase Bank to offer websites, software and downloadable applications, especially designed for mobile devices, including iOS and Android mobile devices, and other mobile devices platforms, which allow mobile device users and/or banking customers to easily capture and upload digital images containing information associated with the images to Defendants’ servers. Defendants have entered into contractual relationships that require and specify the use and practice of the Mobile Imaging Instrumentalities by one or more entities in the United States, as covered by one or more claims of the ’118 patent.

76. Upon information and belief, even though Defendants have been aware of the ’118 patent since their dates of notice, Defendants have neither made any changes to the functionality, operations, marketing, sales, technical support, etc. of such products and services to avoid infringing the ’118 patent nor informed their customers or end-users how to avoid infringing the ’118 patent. To date, Defendants have not identified a single action that they have

taken to avoid infringement (e.g., by designing around or notifying their customers or end-users how to avoid infringement) by themselves or their customers or end-users since they became aware of the ’118 patent.

77. Upon information and belief, Defendants are unaware of any legal or factual basis that their actions solely, or in combination with the actions of their customers and end-users, do not constitute direct or indirect infringement of the ’118 patent. To date, Defendants have not produced any opinion of counsel, request for opinion of counsel, evaluation, analysis, or investigation relating to the validity, scope, interpretation, construction, enforceability, unenforceability, or the infringement or potential infringement of any claim of the ’118 patent. Defendants thus have continued to willfully make, use, sell, and/or offer for sale the Mobile Imaging Instrumentalities with an objectively reckless disregard of the likelihood of their continued infringement and are liable for willful infringement of the ’118 patent.

78. As a direct and proximate result of Defendants’ acts of patent infringement, including but not limited to direct infringement and/or indirect infringement, by way of induced infringement, of the ’118 patent, RMII has been and continues to be injured and has sustained and will continue to sustain substantial damages in an amount not presently known.

CONCLUSION

79. Unless Defendants are enjoined by this Court from continuing their patent infringements, RMII will suffer additional irreparable harm for which there is no adequate remedy at law and impairment of the value of its patent rights.

80. RMII is entitled to recover from Defendants, individually, jointly, and severally, the damages sustained by RMII as a result of Defendants’ wrongful acts in an amount subject to

proof at trial, which, by law, cannot be less than a reasonable royalty, together with interest and costs as fixed by this Court.

81. RMII has incurred and will incur attorneys' fees, costs, and expenses in the prosecution of this action.

82. RMII reserves the right to amend, supplement, or modify its allegations of infringement as facts regarding such allegations arise during the course of this case.

PRAYER FOR RELIEF

RMII respectfully requests that judgment be entered in its favor and against Defendants and that the Court grants the following relief to RMII:

A. A judgment that Defendants have infringed and continue to infringe each of the patents-in-suit as alleged herein;

B. A judgment that Defendants' infringements have been willful;

C. A judgment against Defendants awarding damages to RMII to which it is entitled for patent infringement and any continuing or future infringement through the date such judgment is entered, including interest, costs, expenses and an accounting of all infringing acts including, but not limited to, those acts not presented at trial;

D. A judgment that this is an exceptional case and that RMII be awarded its expenses, costs, and attorneys' fees pursuant to 35 U.S.C. § 285;

E. A judgment that RMII be awarded increased damages in an amount not less than three times the amount of damages found by the jury or assessed by this Court pursuant to 35 U.S.C. § 284;

F. A preliminary and permanent injunction against further and continued infringement by Defendants of each of the patents-in-suit as alleged herein; and

G. A judgment awarding interest on RMII's damages and such other relief as the Court deems just and proper.

JURY DEMAND

RMII hereby demands a trial by jury on all issues so triable.

Dated: July 8, 2015

STAMOULIS & WEINBLATT LLC

/s/ Richard C. Weinblatt

Richard C. Weinblatt #5080
Stamatios Stamoulis #4606
R Touhey Myer #5939
Two Fox Point Centre
6 Denny Road, Suite 307
Wilmington, DE 19809
Telephone: (302) 999-1540
Facsimile: (302) 762-1688
weinblatt@swdelaw.com
stamoulis@swdelaw.com

Of Counsel:

Michael W. Shore*
Alfonso Garcia Chan*
Andrew M. Howard*
Dustin Lo*
SHORE CHAN DEPUMPO LLP
901 Main Street, Suite 3300
Dallas, TX 75202
Telephone: (214) 593-9110
Facsimile: (214) 593-9111
mshore@shorechan.com
achan@shorechan.com
ahoward@shorechan.com
dlo@shorechan.com

* Admitted *Pro Hac Vice*
ATTORNEYS FOR PLAINTIFF
ROTHSCHILD MOBILE IMAGING INNOVATIONS, LLC

EXHIBIT A

US007450163B2

(12) **United States Patent**
Rothschild

(10) **Patent No.: US 7,450,163 B2**
(45) **Date of Patent: Nov. 11, 2008**

(54) **DEVICE AND METHOD FOR EMBEDDING AND RETRIEVING INFORMATION IN DIGITAL IMAGES**

(75) Inventor: **Leigh M. Rothschild**, Plantation, FL (US)

(73) Assignee: **Rothschild Trust Holdings, LLC**, Sunny Isles Beach, FL (US)

(*) Notice: Subject to any disclaimer, the term of this patent is extended or adjusted under 35 U.S.C. 154(b) by 580 days.

(21) Appl. No.: **10/998,691**

(22) Filed: **Nov. 29, 2004**

(65) **Prior Publication Data**

US 2006/0114337 A1 Jun. 1, 2006

(51) **Int. Cl.**
H04N 5/76 (2006.01)

(52) **U.S. Cl.** **348/231.2**

(58) **Field of Classification Search** 348/231.2–231.6
See application file for complete search history.

(56) **References Cited**

U.S. PATENT DOCUMENTS

6,642,959 B1 * 11/2003 Arai 348/231.3
6,657,661 B1 * 12/2003 Cazier 348/231.2
6,947,571 B1 * 9/2005 Rhoads et al. 382/100
2004/0189807 A1 * 9/2004 Smith 348/207.1

* cited by examiner

Primary Examiner—Tuan Ho
Assistant Examiner—Dillon Durnford-Geszvain
(74) *Attorney, Agent, or Firm*—Anthony J. Casella; Gerald E. Hespos

(57) **ABSTRACT**

A digital imaging device and methods thereof that will enable the embedding and retrieving of information in digital images are provided. The digital imaging device includes a capture module for capturing an image and creating a digital image file; an input module for inputting information regarding the captured image; and a processing module for associating the inputted information to the digital image file. The device further includes a scanning module for reading a symbology associated with a printed digital image and wherein the processing module is adapted to use the symbology to retrieve the associated information of the digital image file. The device may be embodied as a digital camera, a mobile phone, personal digital assistant (PDA), etc.

31 Claims, 4 Drawing Sheets

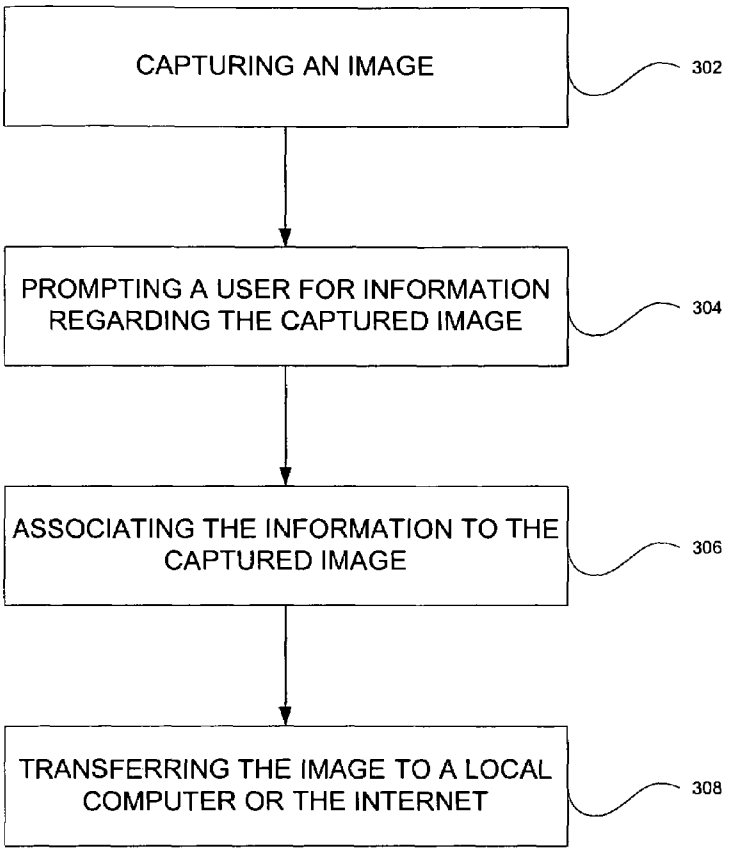

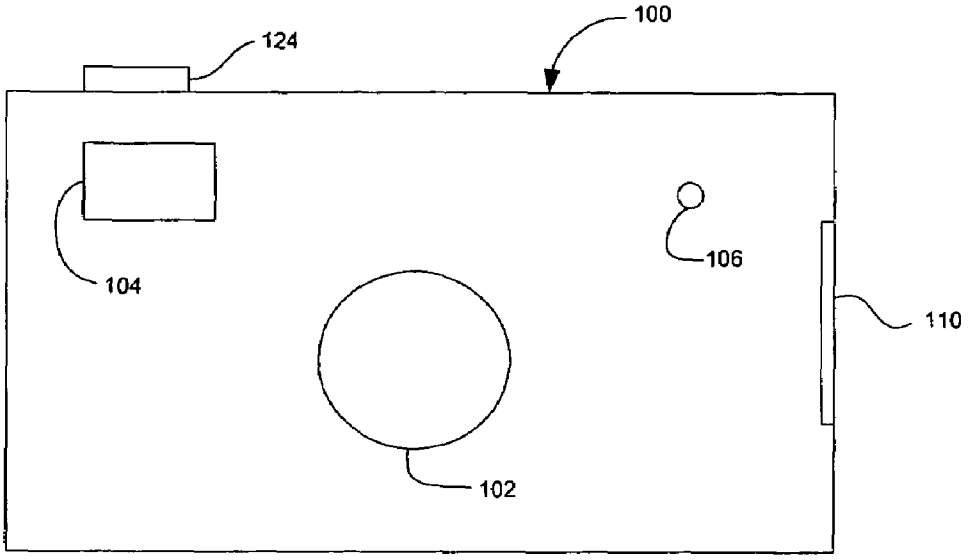

FIG. 1A

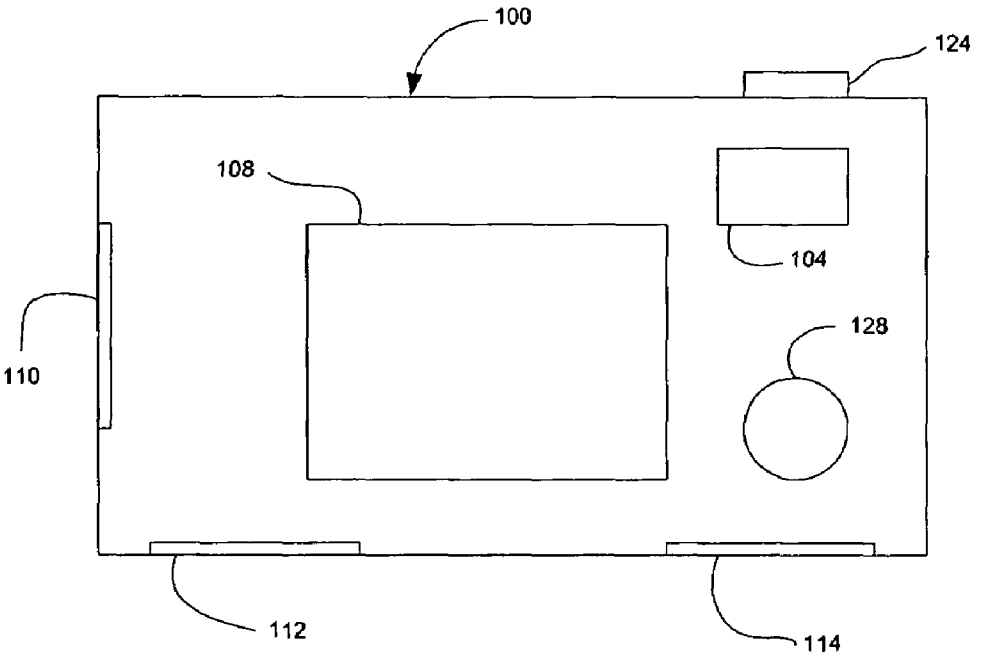

FIG. 1B

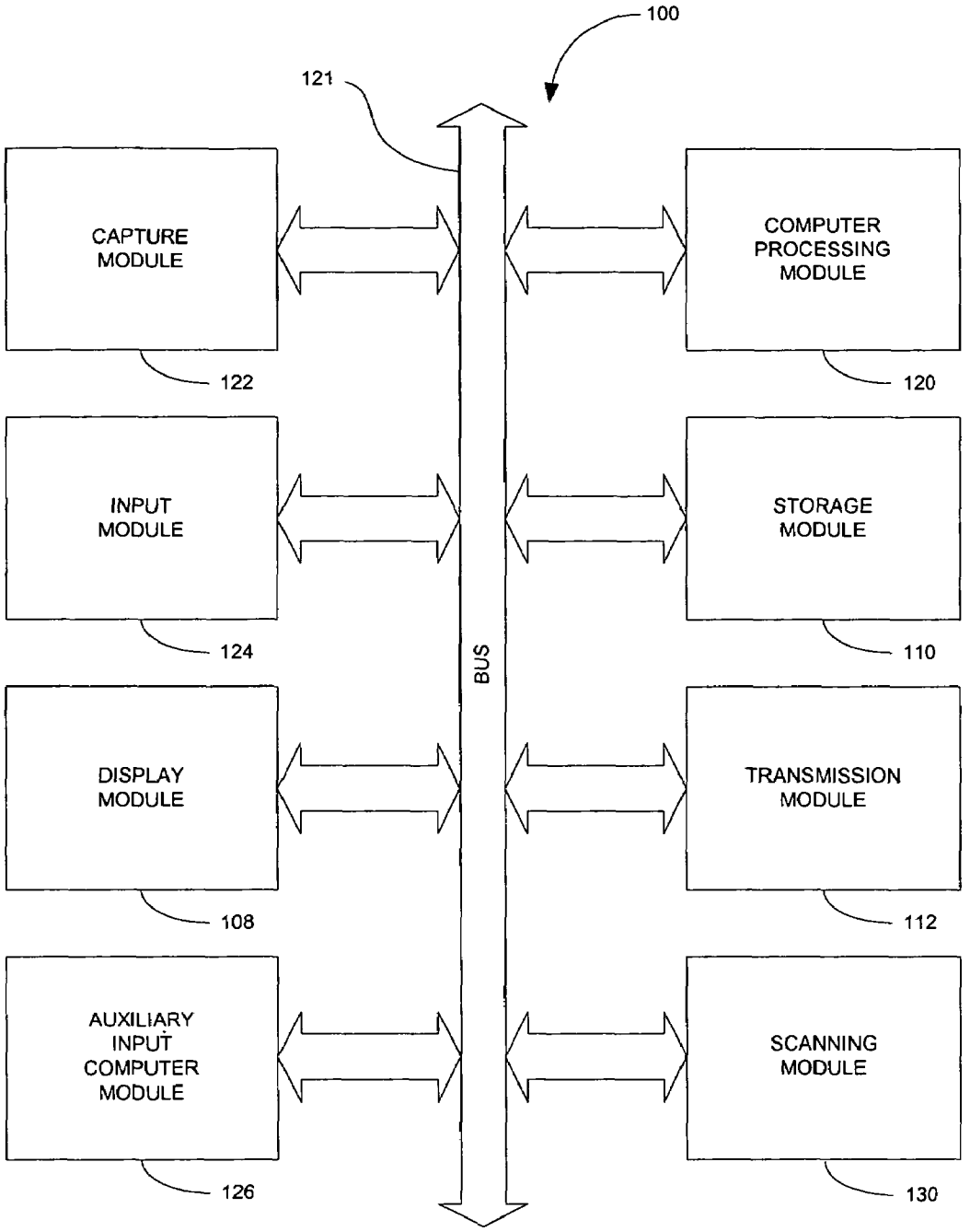
100
121
CAPTURE MODULE
122
INPUT MODULE
124
DISPLAY MODULE
108
AUXILIARY INPUT COMPUTER MODULE
126
BUS
COMPUTER PROCESSING MODULE
120
STORAGE MODULE
110
TRANSMISSION MODULE
112
SCANNING MODULE
130

FIG. 2

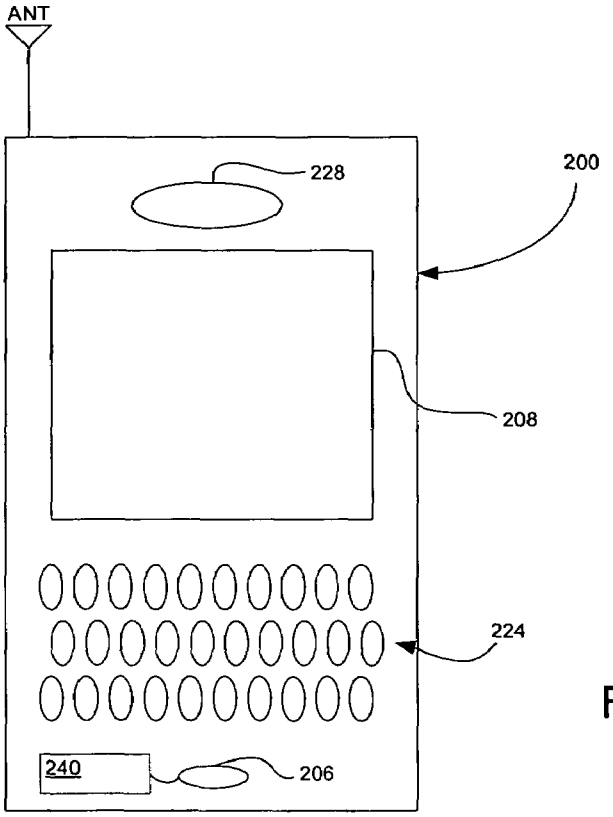

FIG. 3A

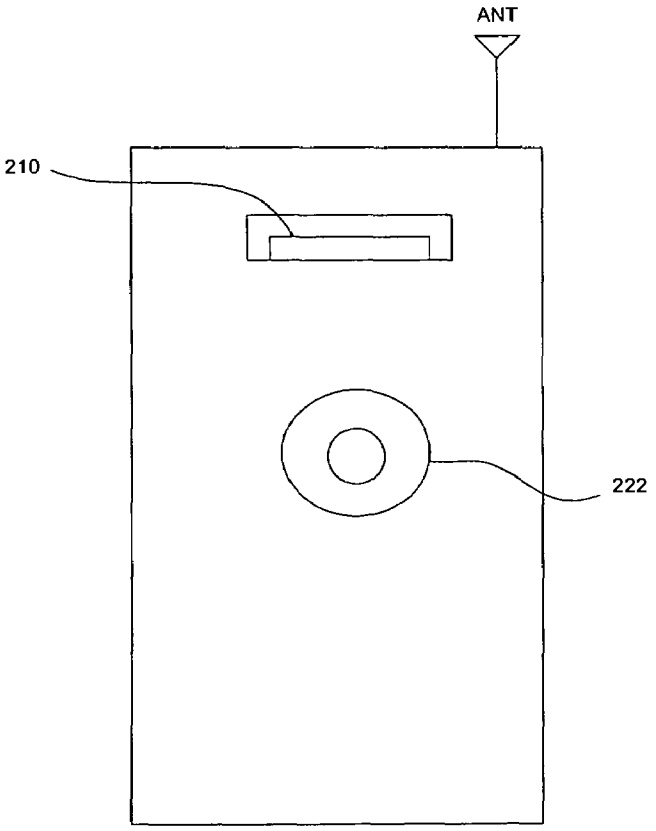

FIG. 3B

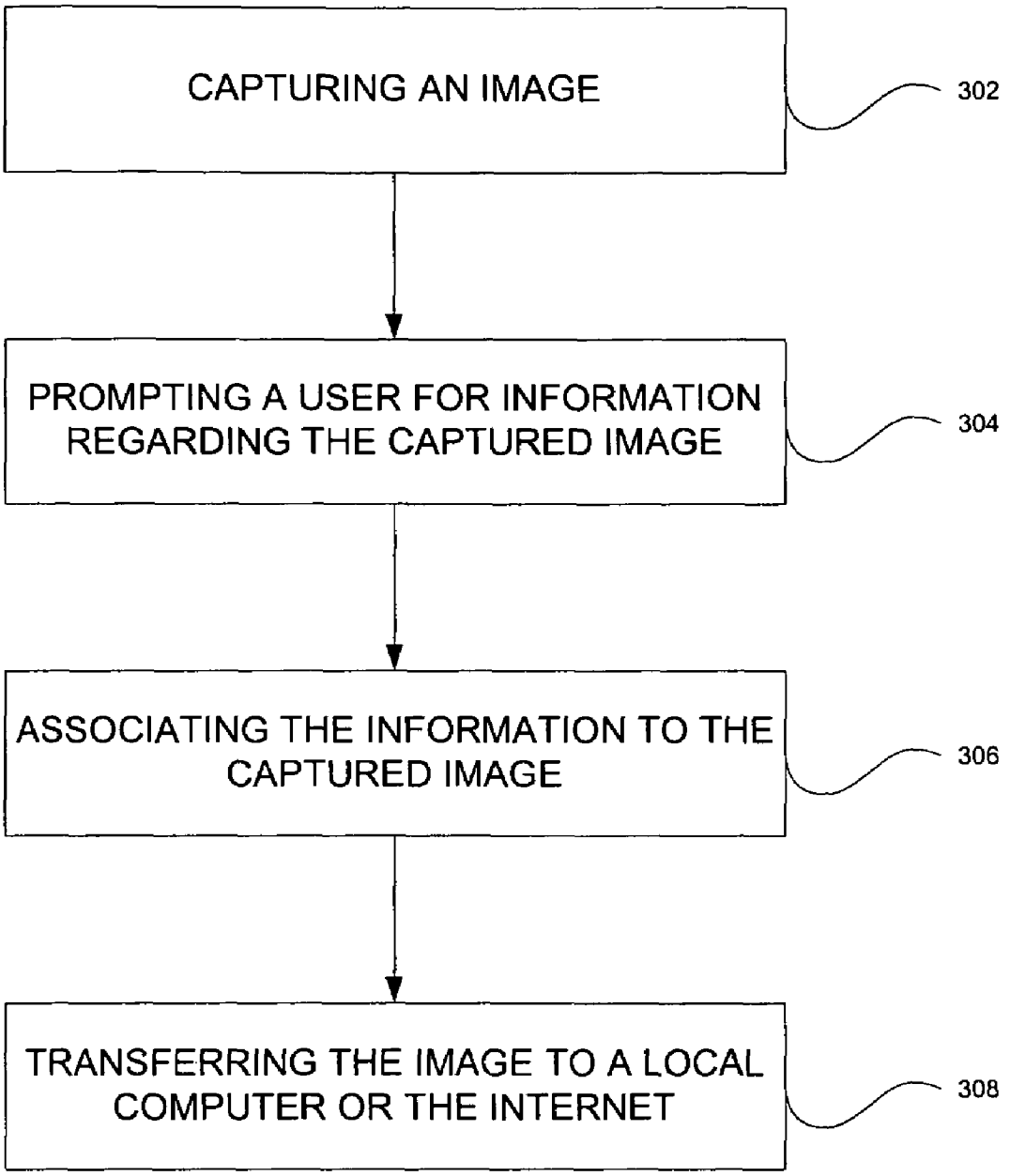
CAPTURING AN IMAGE
302
PROMPTING A USER FOR INFORMATION REGARDING THE CAPTURED IMAGE
304
ASSOCIATING THE INFORMATION TO THE CAPTURED IMAGE
306
TRANSFERRING THE IMAGE TO A LOCAL COMPUTER OR THE INTERNET
308

FIG. 4

DEVICE AND METHOD FOR EMBEDDING AND RETRIEVING INFORMATION IN DIGITAL IMAGES

BACKGROUND

1. Field

The present disclosure relates generally to digital image processing, and more particularly, to devices and methods for embedding and retrieving information in digital images and using the information to organize, process and control the digital images.

2. Description of the Related Art

Photographs are taken for a variety of personal and business reasons. During the course of the year, an individual may take numerous photographs of various events. During these events, quite often there is a variety of different individuals and items present in these photographs. In the prior art, when one desires to catalog these images in a particular order, they usually are left to placing these images manually into photograph albums. This is a very extensive, manual procedure requiring a significant amount of time. In addition, it is very limited with regard to the amount of information that can be associated with the image in a quick and easy manner. While some photo albums allow the writing and placing of text, the entering of this data is a very time consuming and arduous affair. Once having sorted these images into particular albums which may represent categories of interest, it is extremely difficult to retrieve and/or reorganize the images into other categories.

With the advent of digital cameras and digital imaging, the process of organizing images and associating information with the images has become even more difficult. Firstly, upon capturing an image with a digital camera, the camera simply gives the image a numerical file name which usually has no meaning to the user and makes it difficult to retrieve at a later date. Secondly, with the technological advances in file size compression and increased capacity of storage media, several hundred images may be taken before a user downloads the images to a computer or other device, making it a very time consuming task to associate information to each image.

Therefore, a need exists for techniques for easily associating information about an image to the image and using the information to control and retrieve the image.

SUMMARY

A device for capturing, storing, allowing user input, receiving internal input, processing, transmitting, scanning, and displaying digital images is provided. Digital photography has gained a substantial share of the worldwide photographic market. More and more cameras record images in digital form and more and more of these images are stored digitally for retrieval or archival purposes on home and business computers and on the Global Computer Network, e.g., the Internet. The present disclosure describes hardware devices and methods that will facilitate embedding information into digital images of any type (e.g., jpeg, bmp, tiff, etc.) to organize, control and manipulate these images both while in digital form, and later when in printed form.

According to one aspect of the present disclosure, a digital imaging device is provided including a capture module for capturing an image and creating a digital image file; an input module for inputting information regarding the captured image; and a processing module for associating the inputted information to the digital image file. The processing module is adapted to create a separate information file including the inputted information that is linked to the digital image file or to append the inputted information to the digital image file. The device further includes a display module for displaying the captured imaged, wherein the display module is adapted to prompt a user to input information regarding the captured image. Furthermore, the display module may include an audio output device for audibly prompting a user to input information regarding the captured image.

In another aspect of the present disclosure, the device includes a character recognition capture device coupled to the input module for entering information regarding the capture images, wherein the character recognition device is a touch screen overlaid upon the display module.

In a further aspect, the device includes a transmission module for transmitting at least one digital image file and its associated information to a computing device, wherein the transmission module is a hardwired connection, a wireless connection or a removable memory card slot for receiving removable memory.

In another aspect of the present disclosure, the device includes a scanning module for scanning information to be associated with the digital image file. The scanning module will also be employed for reading a symbology associated with a printed digital image and wherein the processing module is adapted to use the symbology to retrieve the associated information of the digital image file.

In still a further aspect of the present disclosure, a mobile communication device is provided including a communication module coupled to an antenna for wirelessly receiving and transmitting communication messages; a capture module for capturing an image and creating a digital image file; an input module for inputting information regarding the captured image; and a processing module for associating the inputted information to the digital image file.

In another aspect of the present disclosure, a method for associating information with a digital image is provided. The method includes the steps of capturing an image and creating a digital image file; prompting a user for information regarding the captured image; receiving information from the user; and associating the received information to the digital image file. The prompting step includes displaying at least one question to the user or audibly producing at least one question to the user. The receiving step further includes the steps of receiving text input via a character recognition capture device; and translating the text input into alphanumeric characters, or alternatively, includes the steps of receiving spoken input via a microphone; and translating the spoken input into alphanumeric characters.

In one aspect, the associating step includes creating a separate information file including the received information that is linked to the digital image file. In another aspect, the associating step includes appending the received information to the digital image file.

The method further includes the step of transmitting the digital image file and associated information to a computing device and retrieving the associated information by scanning a symbology printed with the captured digital image.

BRIEF DESCRIPTION OF THE DRAWINGS

The above and other aspects, features, and advantages of the present disclosure will become more apparent in light of the following detailed description when taken in conjunction with the accompanying drawings in which:

FIG. 1A is front view of a device for capturing digital images and embedding information in the captured images according to an embodiment of the present disclosure;

FIG. **1**B is a rear view of the device illustrated in FIG. **1**A;

FIG. **2** is a block diagram of various modules included in a device for capturing images and embedding information in the images in accordance with the present disclosure;

FIG. **3**A is front view of a device for capturing digital images and embedding information in the captured images according to another embodiment of the present disclosure;

FIG. **3**B is a rear view of the device illustrated in FIG. **3**A; and

FIG. **4** is a flowchart illustrating a method for embedding information in a digital image according to an embodiment of the present disclosure.

DETAILED DESCRIPTION

Preferred embodiments of the present disclosure will be described hereinbelow with reference to the accompanying drawings. In the following description, well-known functions or constructions are not described in detail to avoid obscuring the present disclosure in unnecessary detail. Throughout the figures like reference numerals represent like elements.

A hardware device and methods thereof that will enable the embedding and retrieving of information in digital images are provided. The embedded information will enable a user to organize, process and control these images. Referring to FIGS. **1**A and **1**B, a device **100** for capturing images and associating information about the captured images is shown. The device **100** includes a lens **102** coupled to a capture module, which will be described in detail below, for capturing an image and a viewfinder **104** for correctly positioning the device when capturing an image. The device **100** further includes a microphone **106** for acquiring audio, from the user of the device or from the subject of the image, which may be associated with the image.

A rear side of the device **100** is illustrated in FIG. **1**B where a display module **108** is provided for displaying the captured image. As will be described in more detail below, the display module **108** may include a touch screen for facilitating user input of information to be associated with digital image. The device **100** further includes a storage module **110** for storing a plurality of images, a transmission module **112** for transmitting the plurality of images to another device, e.g., a personal computer, a personal digital assistant (PDA), a server residing on the Internet, etc, and a scanning module **114** for scanning and inputting information to be associated with an image and for reading information from printed images.

Referring to FIG. **2**, the various components of the device **100** will now be described. The device will contain a computer processing module **120**, e.g., a microprocessor. The computer processing module **120** will use computer software instructions that have been programmed into the module and conventional computer processing power to interact and organize the traffic flow between the various other modules. It is to be understood that the present disclosure may be implemented in various forms of hardware, software, firmware, special purpose processors, or a combination thereof. A system bus **121** couples the various components shown in FIG. **2** and may be any of several types of bus structures including a memory bus or memory controller, a peripheral bus, and a local bus using any of a variety of bus architectures. The device also includes an operating system and micro instruction code preferably residing in read only memory (ROM). The various processes and functions described herein may either be part of the micro instruction code or part of an application program (or a combination thereof) which is executed via the operating system.

It is to be further understood that because some of the constituent device components and method steps depicted in the accompanying figures may be implemented in software, the actual connections between the device components (or the process steps) may differ depending upon the manner in which the present disclosure is programmed. Given the teachings of the present disclosure provided herein, one of ordinary skill in the related art will be able to contemplate these and similar implementations or configurations of the present disclosure.

Capture module **122** will capture an image desired by the user in digital form. The capture module includes an image sensor, an analog-to-digital (A/D) converter and a digital signal processor (DSP). As the user pushes the device's shutter button **124**, light is allowed to enter through the lens **102** and shine on the image sensor, e.g., a charge-coupled device (CCD) or complimentary metal-oxide semiconductor (CMOS). The image sensor includes preferably millions of photosensors, e.g., pixels, wherein each pixel absorbs the light and transforms the light into an electric charge proportional to the intensity of light. Each charge is transmitted to an A/D converter where the charge is converted into a digital value representing the color the pixel will be, e.g., representing different intensities of red, green and blue. The digital values are then passed to the digital signal processor which enhances the image, compresses it and then stores it in a digital file format in the storage module **110**. The storage module **110** includes internal storage memory, e.g., random access memory (RAM), or removable memory such as a CompactFlash card, Memory Stick, SmartMedia, MultiMediaCard (MMC), SD (Secure Digital) memory, or any other memory storage that exists currently or will exist in the future. The digital file format utilized to store the image is not critical, but may include standard file formats which currently exist or will exist in the future for example jpeg, tiff, bmp, gif, pcx, png or other file formats.

The device **100** will also contain a display module **108** for the user to view acquired images. This display may be in any current form in the art, including Liquid Crystal Displays (LCD), Light emitting diode displays (LED), Cathode Ray Tube Displays (CRT) or any other type of display currently existing or existing in the future. The display module **108** will also include an audio output device **128**, e.g., a speaker, headphone jack, etc., allowing the user to also hear audio output from the hardware device. An additional but optional embodiment of the present disclosure may also include video or computer output jacks that will allow the user to hook the subject hardware device to an external television display device or a computer.

The hardware device **100** of the present disclosure will contain a user input module **124** to either receive user instructions via text input by the way of a standard keyboard interface, or a character recognition capture device which translates user text input into alphanumeric characters. Preferably, the character recognition device is a touch screen which overlays the display module **108** and text is entered via a pen-like stylus. Such input devices are standard and currently available on many electronic devices including portable digital assistants (PDAs) and cellular telephones. Alternatively, microphone **106** will be coupled to the input module **124** and the input module will further include a analog-to-digital (A/D) converter and a voice recognition processor that translates human voice into alpha numeric characters for user input.

The user will utilize the user input module after an image is captured to enter various data that will either be stored as a file associated with the digital image file or alternatively written

as an additional part of the digital image file. By example, if the digital image is recorded by the hardware device as jpg101 or tif101 or bmp101 where these descriptions indicate the name of the captured digital image, then another file will be created for each captured digital image. This file would be the information associated file. In the above example, the image jpg101 would now have an additional file called info101 (or any other name that the hardware device selects). This digital file would receive and contain the user inputted information. Alternatively, the user input module may write its information directly to the previously stored digital file. By example, if the digital image is recorded by the hardware device as jpg101 or tif101 or bmp101 where these descriptions indicate the name of the captured digital image, then this file will be appended with the additional information written from the user input module, for example, in the header of the digital image file.

The device **100** will also include an auxiliary input computer module **126**. This module will allow the hardware device to automatically and simultaneously (with image capture) store information in the associated file or alternatively in the same file as the digital image. The information from the auxiliary input module **126** will flow directly from the various input processors contained in the hardware device. These processors may include but are not limited to a processor to determine the individual number of the picture in the sequence of pictures shot that are captured and stored, a Global Positioning System (GPS) chip to determine the geographic location of where the image was taken, a date chip to determine the date and time the image was taken, a voice capture device to capture comments on the image, and various other input processors that will provide additional information relevant to the digital information, all information which the auxiliary input module will store as information in the info files or directly as addenda in the digital image files. Knowledge of the art, indicates that the individual processors such as GPS, date time and voice storage, may be separate processors or may also be incorporated as one computer processor.

After the digital image is captured and stored on the device **100**, these files will be transferred to the user's local computer hardware device or to the Global Computer Network, e.g., the Internet, or to the user's local device and then to the Global Computer Network. This transfer will be done by transmission module **112** including hardwired and/or wireless connectivity. The hardwire connection may include but is not limited to hard wire cabling e.g., parallel or serial cables, USB cable, Firewire (1394 connectivity) cables and the appropriate port. The wireless connection will operate under any of the various known wireless protocols including but not limited to Bluetooth™ interconnectivity, infrared connectivity, radio transmission connectivity including computer digital signal broadcasting and reception commonly referred to as Wi-X or 80211.X (where x denotes the type of transmission), or any other type of communication protocols or systems currently existing or to be developed for wirelessly transmitting data. Furthermore, the transmission module **112** may include a removable memory card slot for accepting any of the various known removable memory cards, transferring the image files to the removable card, and subsequently the images may be uploaded to a computer from the removable memory card by an appropriate reader coupled to the user's computer. The file name of each digital image file and/or associated file will be recorded in a relational database either on the user's local computer or the Global computer network. This database will contain information on any file(s) related to each digital image including audio and video files, or other associated image files.

The user, or any other party, may print out any of the digital images described herein. The printing will be done once the images are stored on the local computer or the Global Computer Network and recorded in a relational database as described above. When the images are printed out, the computer that prints the image will cause the image to be printed with symbology that encodes that file name of the image and file location of the image, or any other coding that will provide access to the file name and file location. This file name will be the assigned name that the image was stored in at the relational database, as well as the assigned location of the relational database whether in the user's local computer or at a stored location on the Global Computer Network. The symbology may be in any form currently practiced in the art including barcodes (e.g., UPC, EAN, PDF417, etc.), photosymbols, standard or specialized text, etc, or any future type of symbology. Of course, as stated, any symbology utilized will represent or lead to the file names and file locations of the digital images.

The device **100** will further include an integrated scanning module **130** that will contain a light source, e.g., LED, and photocell coupled to the computer processing module **120**, or alternatively, will includes a separate decoder engine that will decode the data received by the photocell before sending it to the computer processing module **120**. Knowledge of the art reveals that many different types of scanners currently exist and the inventor realizes that the type of scanner would depend upon the type of symbology that is utilized in the printed images. The user will be able to scan the printed digital images with the device **100** and the scanning module **130** would scan in the symbology and using standard computer programming and the computer processing module, the device would translate the symbology to extract the name of the digital image and the file locations (whether local or on the Global Computer Network) of the digital image. Alternatively, the scanner may extract some type of marker or symbol that when presented to the relational database would indicate the file name and file location of the digital images. This information would then be transferred to the transmission module which will transmit it to the local or Global computer Network which will then submit it to the relational database containing information on the digital images. Using standard computer programming and processing, this database would then locate the stored digital image and associated files and also process the users request(s) regarding the digital image.

If the subject hardware device is coupled to a computer via the transmission module **112**, then the hardware device **100** will receive back and display the processed requests on the display module **108**. By example, a user may scan in a printed digital image with the hardware device **100** and then receive that image for display on his device, along with auxiliary information on the image, and along with auxiliary and associated audio and video files that can be displayed on the hardware device via the display module **108**.

Referring to FIGS. **3**A and **3**B, another embodiment of the present disclosure is illustrated. Here, a device **200** according to the principles of the present disclosure is embodied as a mobile phone. Device **200** includes a microphone **206** having the same functionality as microphone **106** and is further coupled to a communication module **240** for encoding a user's speech to be transmitted via antenna ANT using CDMA, PCS, GSM or any other known wireless communication technology. Device **200** further includes display module **208** for displaying captured images and preferably the display module will have a touch screen overlaid upon it which will enable user input via a stylus. The user may also enter phone numbers to be dialed via the touch screen. As is known in the mobile phone art, device **200** may include a full QWERTY keyboard **224** as an input module to enter text

information to be associated to captured images. Earpiece or speaker **228** may be utilized to play audio clips associated with images in addition to being coupled to the antenna ANT and a decoder for receiving and decoding voice communication from another mobile phone.

Preferably, the antenna ANT is coupled to a transmission module similar to the one described above in relation to FIG. **2**. The transmission module will compress and encode captured images for transmission using any known wireless communication technology. Transmitting images via wireless technology will facilitate the transferring of images to an online photo storage site or to an online photo developing service provider.

Referring to FIG. **3**B, a rear side of device **200** is shown. Capture module **222** is employed for capturing images and when disposed on a rear side of device **200** is used in conjunction with display module **208** for positioning a subject of the image in lieu of a viewfinder. In this embodiment, the capture module **222** may also be used in conjunction with the scanning module to read symbology associated with an image. Here, the capture module will acquire an image of the symbology and the scanning module will further include a digital signal processor executing an algorithm for deciphering or decoding the symbology from the capture image. The use of an image sensor to read symbology, e.g., a barcode, is known in the art and systems employing such technology is commercially available from Symbol Technologies of New York.

Similar to the embodiments described in relation to FIGS. **1** and **2**, device **200** includes a storage module **210** for storing images via a removable memory card.

In utilizing the hardware device described herein, the user will be able to accomplish the various applications of the disclosure which are described below in relation to FIG. **4**.

A user takes several pictures with his imaging device (step **302**). In one example, the picture is of a baby in Las Vegas. The next picture is of a Monet painting hanging in a gallery in Las Vegas. Another picture is of the user's wife. At end of taking pictures or alternatively, immediately after taking each individual picture, the user goes back to the device **100**, **200** and using either keystroke input via input module **124** or voice recognition software via a microphone, or any other input means the user is prompted to provide the following information regarding the pictures, i.e., the images taken (step **304**):

(1) The file location to store the photos or images once they are transferred to permanent memory storage, e.g., a local computer or a server residing on the Internet. For the first picture the user indicates that he would like the photo stored under his baby picture file, e.g., a folder on his local computer, for the second picture his famous art file, and for third picture his file with pictures of his wife.

(2) The user is then asked via the speaker, or prompted on the display module **108**, **208**, if he wants to attach any audio or video to the images to stay associated with the images once they are stored. He indicates that for the first image he wishes to record an audio file indicating: "this is a picture of my baby girl Samantha here in Las Vegas. Boy is she cute." For the second image: "Loved this Monet and had previously seen it in at the Louvre last year" for third: "Jenny is wearing the new dress that I just bought her" also for number three picture please attach the video file entitled Jenny's day in Las Vegas to this picture.

(3) The user now is asked via text input or voice recognition or any other input means, whether they will be storing these photos online. The answer would be either Yes or No. If the user answers Yes, a predetermined site could have been selected and pre-stored in the camera hardware device (for instance the Ofoto or Imagestation site) and selected photos would automatically go to that location for upload when the digital images are transferred.

The hardware device retrieves (from input that it receives from the auxiliary input computer module **126**) the time and location of the images. The hardware device also knows (from memory that was pre-stored in the hardware) the name and identification information on the owner of the hardware device or any guest using the device. Moreover, the hardware device will also store the number of the digital image by recording the order that the image was taken in. The user can also flag (select) any images that he would like to have printed or emailed.

The various information is then complied and either stored as a separate information file associated to the image or appended to the digital image file and stored for example in the header of the image file (step **306**).

The user will now transfer the images to his local computer workstation which may or may not be connected to the Global Computer Network via transmission module **112** (step **308**). When the computer receives these imbedded 'smart pix' images, the computer will:

a. Sort and file the images in the file or folder selected including storing the files with the associated information and audio and video attachments;

b. Perform any actions requested for the photos including, email the photos to a selected user or users and print the photos on designated printers in a size pre-selected; and

c. With a connection to the Global Computer Network, automatically upload the photos and associated attached files to the specified server site (Ofoto, or Smartpix, for instance) for storage and retrieval.

Once the images are printed, the user will be enabled, regardless of the time elapsed since the images were taken, to take a hardware device (possibly the camera device that the user utilized to take the images, or another hardware reader device) and scan it over a photo. The device will read the symbology in the images and using standard communications techniques including Wifi or Bluetooth, Infrared, or Cabling, etc., the scanning/reading device will transmit the photo identifier information to a computer processor which then may optionally transfer it to the Global Computer Network. The device will then receive the information back from the local processor or Global Computer Network and will then locate the file or files that contain the image and associated attachments on the local or Global Computer Network.

By example, the user holds the scanning device over images of a child on the beach and an audio track then comes back: "Daddy I love this beach and I love you". The user would also be able to instantly receive information on the photo such as when and where the photo was taken and who the photographer was. The user could also request that the photo be printed to a local printer in a specific size or that the picture be emailed to a selected recipient. Other user requests could include asking the computer to display all associated photos, and file attachments, or to store the photo in a selected location on the local computer or the Global Computer Network.

While the disclosure has been shown and described with reference to certain preferred embodiments thereof, it will be understood by those skilled in the art that various changes in form and detail may be made therein without departing from the spirit and scope of the disclosure as defined by the appended claims.

What is claimed is:

1. A digital imaging camera device comprising:

a capture module for capturing an image and creating a digital image file;

an input module disposed on the camera device for inputting storage location information regarding each captured image, the storage location information being indicative of a storage location on a separate external computing device for storing each digital image file after transfer from the digital imaging camera device;

a processing module for associating the inputted information to the digital image file;

a transmission module for transmitting the digital image file and the associated information to the external computing device for storage;

a scanning module for reading a symbology associated with a printed version of the digital image file, wherein the transmission module is adapted to transmit the symbology to the external computing device and receive the digital image file and associated information retrieved at the external computing device based on the symbology; and

a display module disposed on the camera device for displaying the retrieved digital image file and associated information.

2. The device as in claim 1, further comprising a microphone for acquiring audio to be associated to the digital image file.

3. The device as in claim 1, wherein the display module is adapted to prompt a user to input information regarding the captured image.

4. The device as in claim 3, further comprising a character recognition capture device coupled to the input module for entering information regarding the capture images.

5. The device as in claim 4, wherein the character recognition device is a touch screen overlaid upon the display module.

6. The device as in claim 1, wherein the display module further includes an audio output device for audibly prompting a user to input information regarding the captured image.

7. The device as in claim 1, further comprising a storage module for storing at least one digital image file and the information associated to the digital image file.

8. The device as in claim 7, wherein the storage module is internal storage memory or removable storage memory.

9. The device as in claim 1, wherein the transmission module is a hardwired connection, a wireless connection or a removable memory card slot for receiving removable memory.

10. The device as in claim 1, further comprising an auxiliary input module for determining a geographic location of where the captured image was taken, wherein the processing module associates the determined geographic location to the captured image.

11. The device as in claim 1, wherein the scanning module is further adapted for scanning information to be associated with the digital image file.

12. The device as in claim 1, wherein the processing module is adapted to create a separate information file including the inputted information that is linked to the digital image file.

13. The device as in claim 1, wherein the processing module is adapted to append the inputted information to the digital image file.

14. The device as in claim 1, further comprising an auxiliary input module for generating auxiliary information related to the captured image, wherein the auxiliary information is date, time, sequence number of the capture image and user information.

15. A mobile communication device comprising:

a communication module coupled to an antenna for wirelessly receiving and transmitting communication messages;

a capture module for capturing an image and creating a digital image file;

an input module disposed on the mobile communication device for inputting storage location information regarding each captured image, the storage location information being indicative of a storage location on a separate external computing device for storing each digital image file after transfer from the mobile communication device;

a processing module for associating the inputted information to the digital image file;

a transmission module coupled to the antenna for transmitting the digital image file and the associated information to the external computing device for storage;

a scanning module coupled to the capture module for decoding a symbology captured by the capture module from a printed version of the digital image file, wherein the transmission module is adapted to transmit the symbology to the external computing device and receive the digital image file and associated information retrieved at the external computing device based on the symbology; and

a display module disposed on the mobile communication device for displaying the retrieved digital image file and associated information.

16. The device as in claim 15, further comprising a microphone for acquiring audio to be associated to the digital image file.

17. The device as in claim 15, further comprising a character recognition capture device coupled to the input module for entering information regarding the capture images.

18. The device as in claim 15, further comprising an audio output device for audibly prompting a user to input information regarding the captured image and for audibly producing the received communication messages.

19. The device as in claim 15, further comprising a storage module for storing at least one digital image file and the information associated to the digital image file.

20. The device as in claim 19, wherein the storage module is internal storage memory or removable storage memory.

21. The device as in claim 15, further comprising an auxiliary input module for determining a geographic location of where the captured image was taken, wherein the processing module associates the determined geographic location to the captured image.

22. The device as in claim 15, wherein the processing module is adapted to create a separate information file including the inputted information that is linked to the digital image file.

23. The device as in claim 15, wherein the processing module is adapted to append the inputted information to the digital image file.

24. The device as in claim 15, further comprising an auxiliary input module for generating auxiliary information related to the captured image, wherein the auxiliary information is date, time, sequence number of the capture image and user information.

25. A method for associating information with a digital image, the method comprising the steps of:

providing a digital imaging camera device;

capturing an image and creating a digital image file with the camera device;

prompting a user with the camera device for information regarding the captured image;

receiving storage location information from the user for each digital image, the storage location information being indicative of a storage location on a separate external computing device for storing each digital image file after transfer from the digital imaging device;

associating the received information to the digital image file;

transmitting the digital image file and associated information to the external computing device for storage;

scanning with the camera device a symbology associated with a printed version of the digital image file;

transmitting the symbology to the external computing device to retrieve the digital image file and associated information based on the symbology;

receiving the digital image file and associated information at the camera device; and

displaying on the camera device the digital image file and associated information.

26. The method as in claim **25**, wherein the prompting step includes displaying at least one question to the user.

27. The method as in claim **25**, wherein the prompting step includes audibly producing at least one question to the user.

28. The method as in claim **25**, wherein the receiving storage location information step further comprises the steps of:

receiving text input via a character recognition capture device disposed on the camera device; and

translating the text input into alphanumeric characters.

29. The method as in claim **25**, wherein the receiving storage location information step further comprises the steps of:

receiving spoken input via a microphone disposed on the camera device ; and

translating the spoken input into alphanumeric characters.

30. The method as in claim **25**, wherein the associating step includes creating a separate information file including the received information that is linked to the digital image file.

31. The method as in claim **25**, wherein the associating step includes appending the received information to the digital image file.

* * * * *

EXHIBIT B

US007456872B2

(12) **United States Patent**
Rothschild

(10) **Patent No.: US 7,456,872 B2**
(45) **Date of Patent: Nov. 25, 2008**

(54) **DEVICE AND METHOD FOR EMBEDDING AND RETRIEVING INFORMATION IN DIGITAL IMAGES**

(75) Inventor: **Leigh M. Rothschild**, Plantation, FL (US)

(73) Assignee: **Rothschild Trust Holdings, LLC**, Sunny Isles Beach, FL (US)

(*) Notice: Subject to any disclaimer, the term of this patent is extended or adjusted under 35 U.S.C. 154(b) by 656 days.

(21) Appl. No.: **11/051,069**

(22) Filed: **Feb. 4, 2005**

(65) **Prior Publication Data**

US 2006/0114338 A1 Jun. 1, 2006

Related U.S. Application Data

(63) Continuation-in-part of application No. 11/020,459, filed on Dec. 22, 2004, which is a continuation-in-part of application No. 10/998,691, filed on Nov. 29, 2004.

(51) **Int. Cl.**
H04N 5/76 (2006.01)

(52) **U.S. Cl.** **348/231.99**

(58) **Field of Classification Search** 348/231.99
See application file for complete search history.

(56) **References Cited**

U.S. PATENT DOCUMENTS

6,282,362	B1 *	8/2001	Murphy et al.	386/46
6,642,959	B1 *	11/2003	Arai	348/231.3
7,154,536	B2 *	12/2006	Kuwayama	348/207.99
2003/0063194	A1 *	4/2003	Nishiyama et al.	348/207.1

* cited by examiner

Primary Examiner—David L Ometz
Assistant Examiner—Dillon Durnford-Geszvain
(74) *Attorney, Agent, or Firm*—Anthony J. Casella; Gerald E. Hespos

(57) **ABSTRACT**

A digital imaging device and method for embedding and retrieving of information in digital images are provided. The digital imaging device includes a capture module for capturing an image and creating a digital image file; a locational information module for determining a location of the device when capturing the image; and a processing module for associating the location information to the digital image file. The device further includes a user verification module for verifying an identity of a user of the device at a time of image capture and an encryption module for encrypting the digital image file and associated information. The method provides for securing information associated with the digital images and for verifying activities of a user.

39 Claims, 8 Drawing Sheets

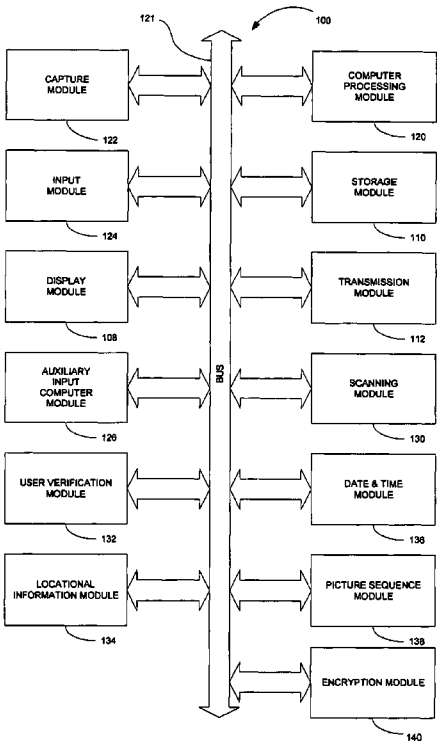

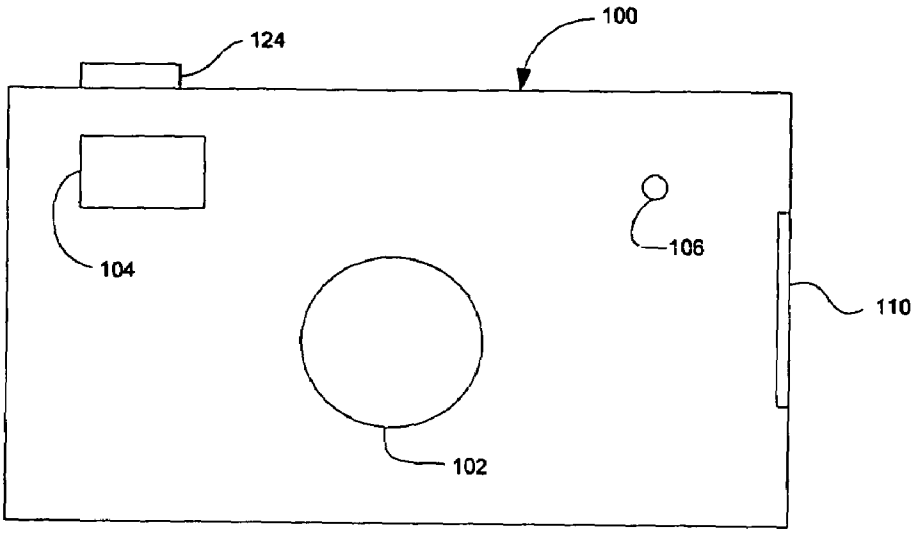

FIG. 1A

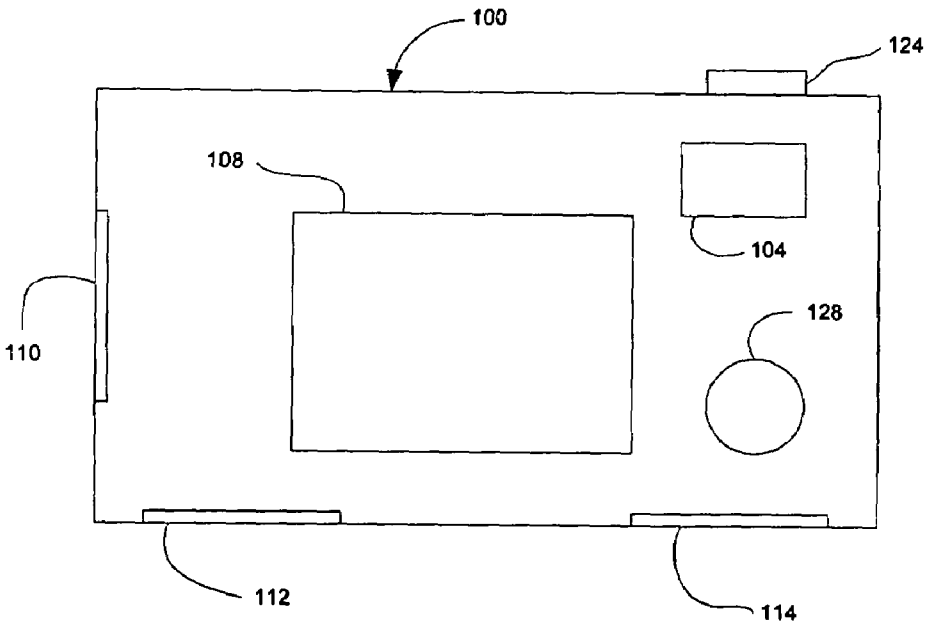

FIG. 1B

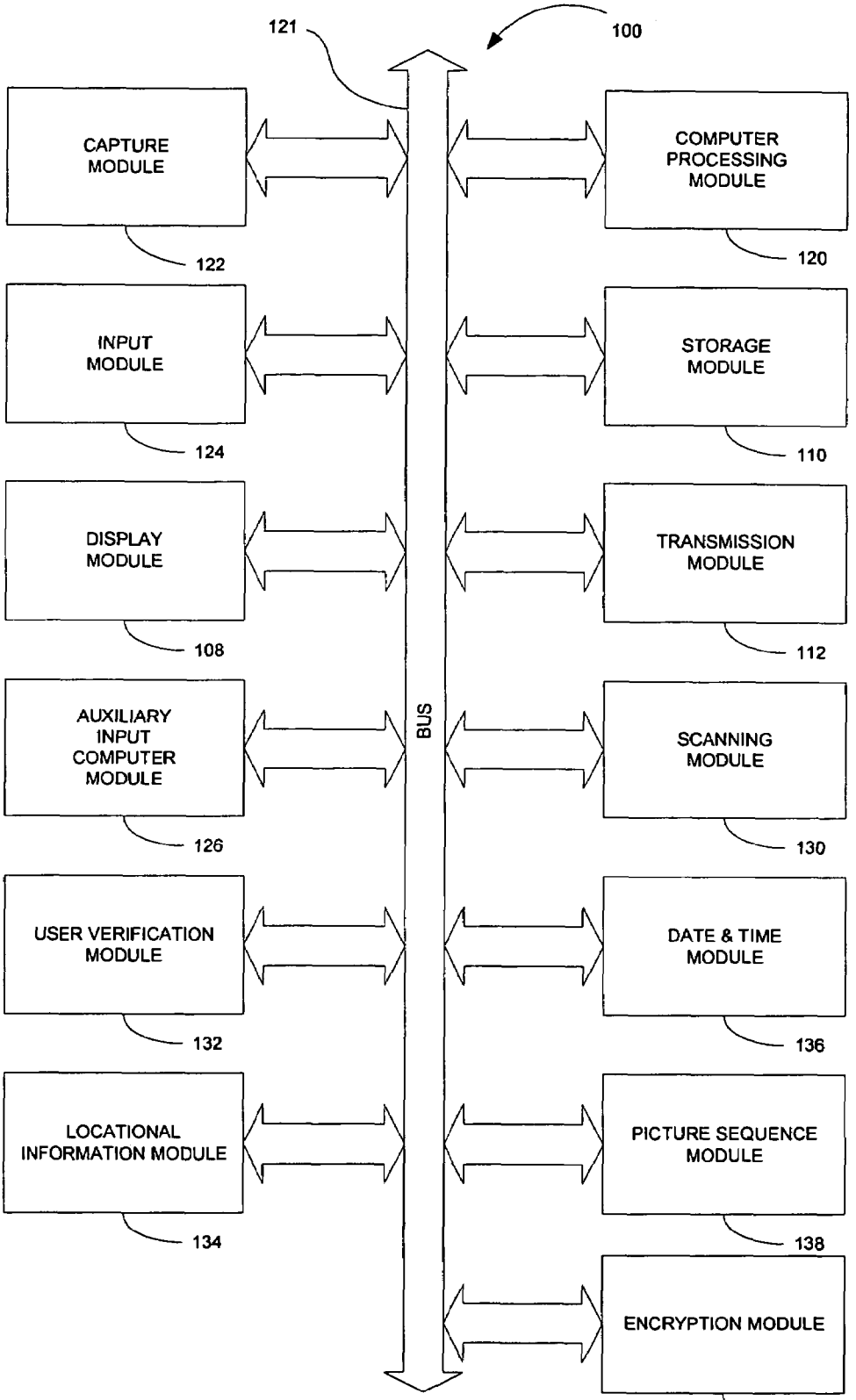
121
100
CAPTURE MODULE
122
INPUT MODULE
124
DISPLAY MODULE
108
AUXILIARY INPUT COMPUTER MODULE
126
USER VERIFICATION MODULE
132
LOCATIONAL INFORMATION MODULE
134
BUS
COMPUTER PROCESSING MODULE
120
STORAGE MODULE
110
TRANSMISSION MODULE
112
SCANNING MODULE
130
DATE & TIME MODULE
136
PICTURE SEQUENCE MODULE
138
ENCRYPTION MODULE
140

FIG. 2

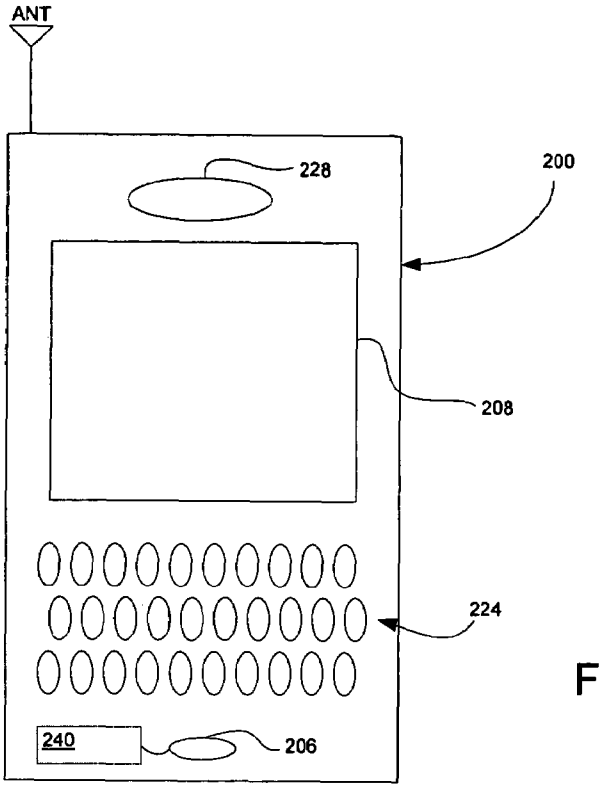

FIG. 3A

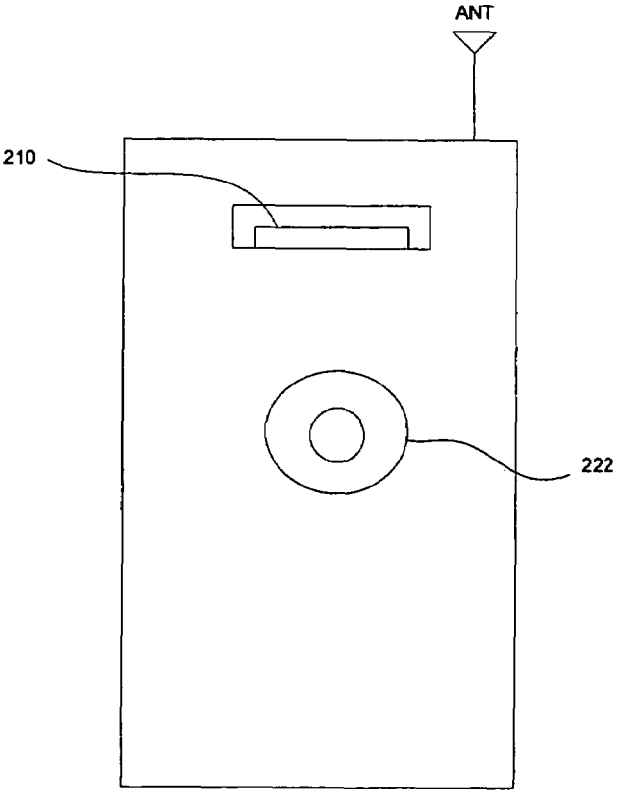

FIG. 3B

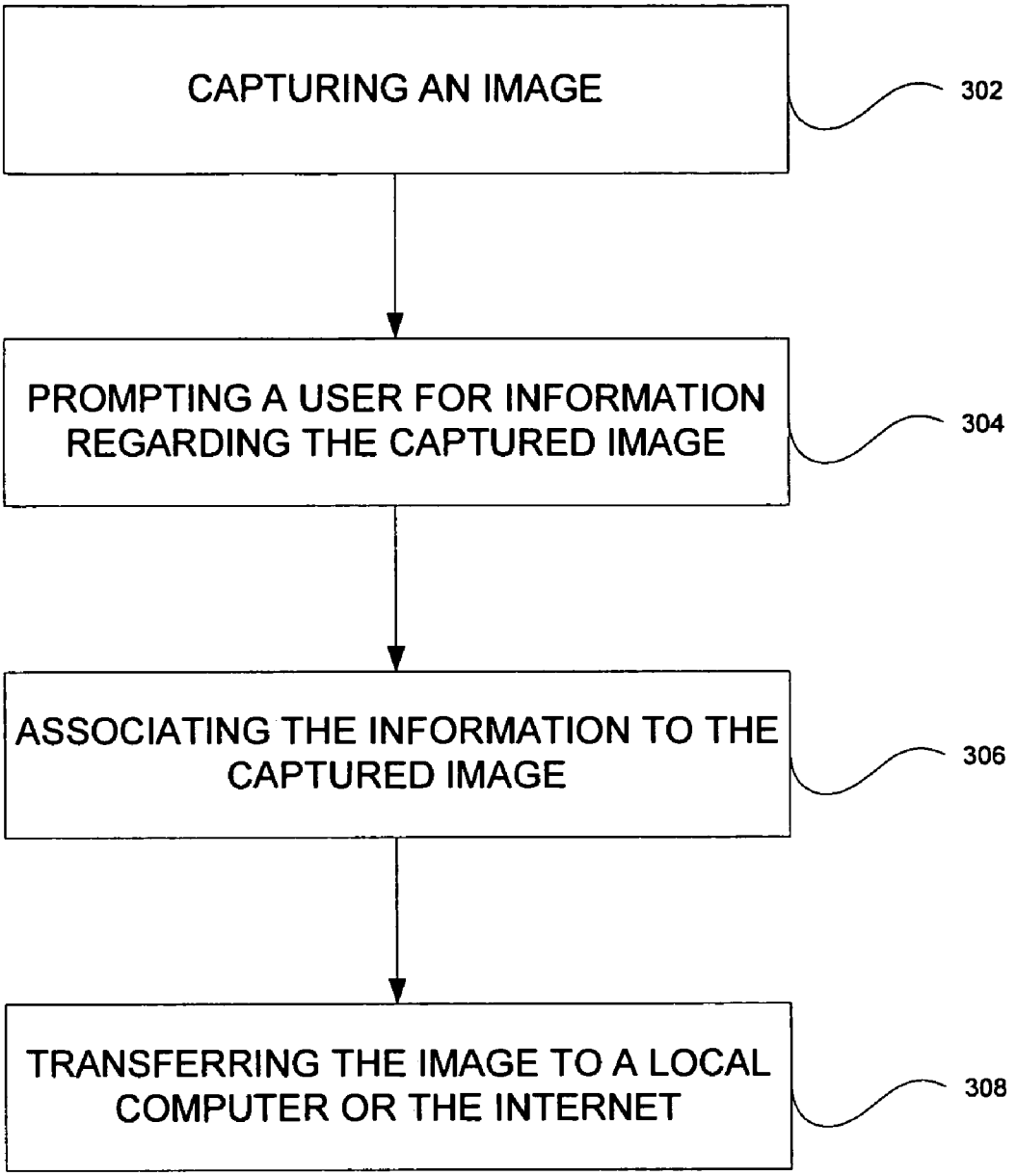
CAPTURING AN IMAGE
302
PROMPTING A USER FOR INFORMATION REGARDING THE CAPTURED IMAGE
304
ASSOCIATING THE INFORMATION TO THE CAPTURED IMAGE
306
TRANSFERRING THE IMAGE TO A LOCAL COMPUTER OR THE INTERNET
308

FIG. 4

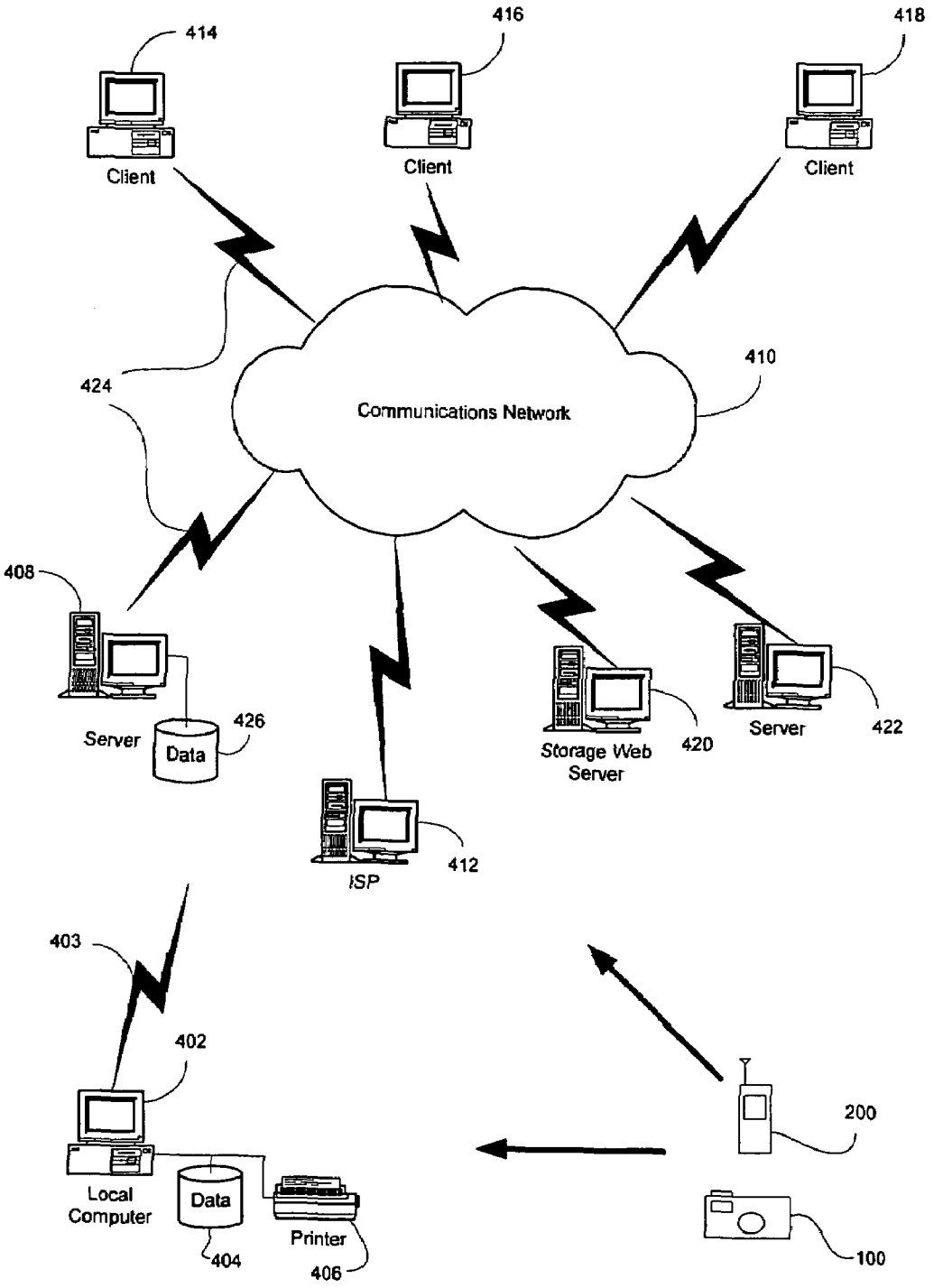
414
Client
416
Client
418
Client
424
Communications Network
410
408
Server
Data
426
Storage Web Server
420
Server
422
ISP
412
403
402
Local Computer
Data
404
Printer
406
200
100

FIG. 5

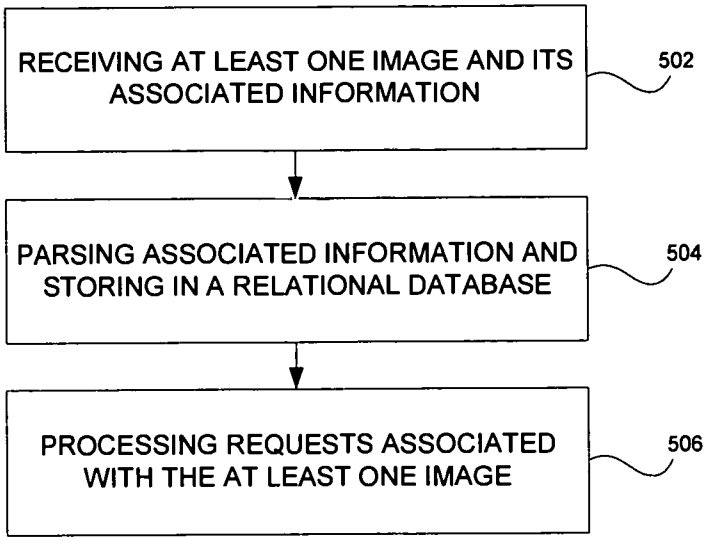
RECEIVING AT LEAST ONE IMAGE AND ITS ASSOCIATED INFORMATION
502
PARSING ASSOCIATED INFORMATION AND STORING IN A RELATIONAL DATABASE
504
PROCESSING REQUESTS ASSOCIATED WITH THE AT LEAST ONE IMAGE
506

FIG. 6A

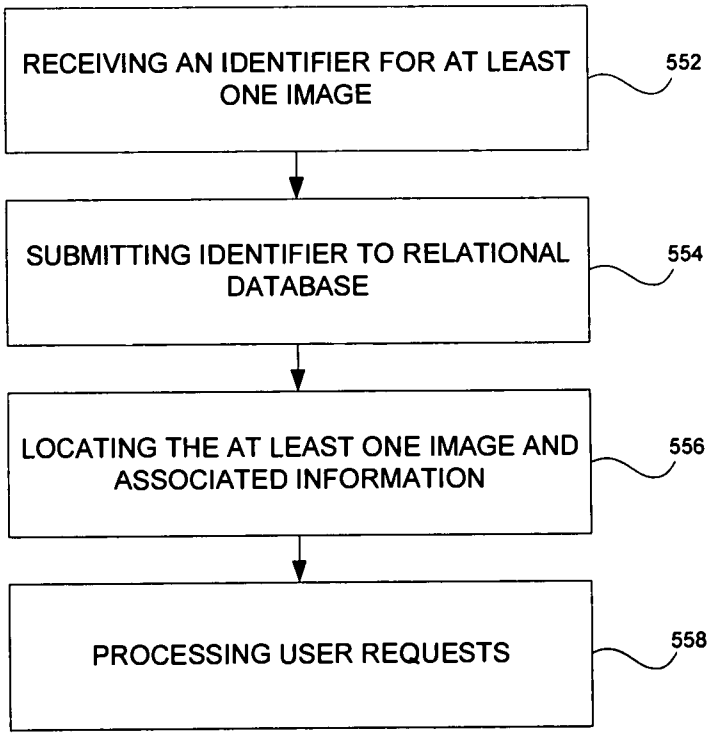
RECEIVING AN IDENTIFIER FOR AT LEAST ONE IMAGE
552
SUBMITTING IDENTIFIER TO RELATIONAL DATABASE
554
LOCATING THE AT LEAST ONE IMAGE AND ASSOCIATED INFORMATION
556
PROCESSING USER REQUESTS
558

FIG. 6B

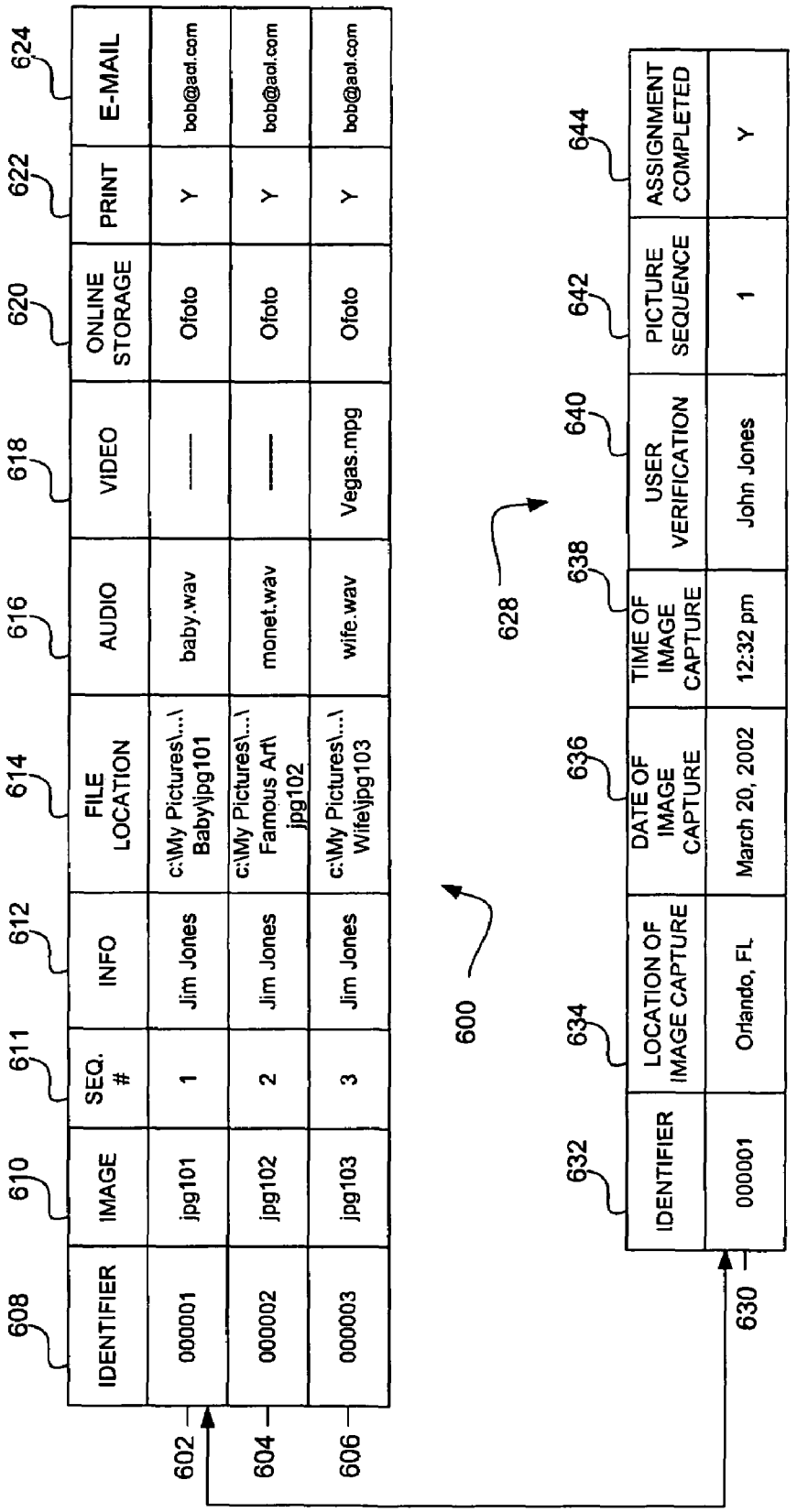
608
IDENTIFIER
610
IMAGE
611
SEQ. #
612
INFO
614
FILE LOCATION
616
AUDIO
618
VIDEO
620
ONLINE STORAGE
622
PRINT
624
E-MAIL
000001
jpg101
1
Jim Jones
c:\My Pictures\...\Baby\jpg101
baby.wav
—
Ofoto
Y
bob@aol.com
000002
jpg102
2
Jim Jones
c:\My Pictures\...\Famous Art\jpg102
monet.wav
—
Ofoto
Y
bob@aol.com
000003
jpg103
3
Jim Jones
c:\My Pictures\...\Wife\jpg103
wife.wav
Vegas.mpg
Ofoto
Y
bob@aol.com
602
604
606
600
628
630
632
IDENTIFIER
634
LOCATION OF IMAGE CAPTURE
636
DATE OF IMAGE CAPTURE
638
TIME OF IMAGE CAPTURE
640
USER VERIFICATION
642
PICTURE SEQUENCE
644
ASSIGNMENT COMPLETED
000001
Orlando, FL
March 20, 2002
12:32 pm
John Jones
1
Y

FIG. 7

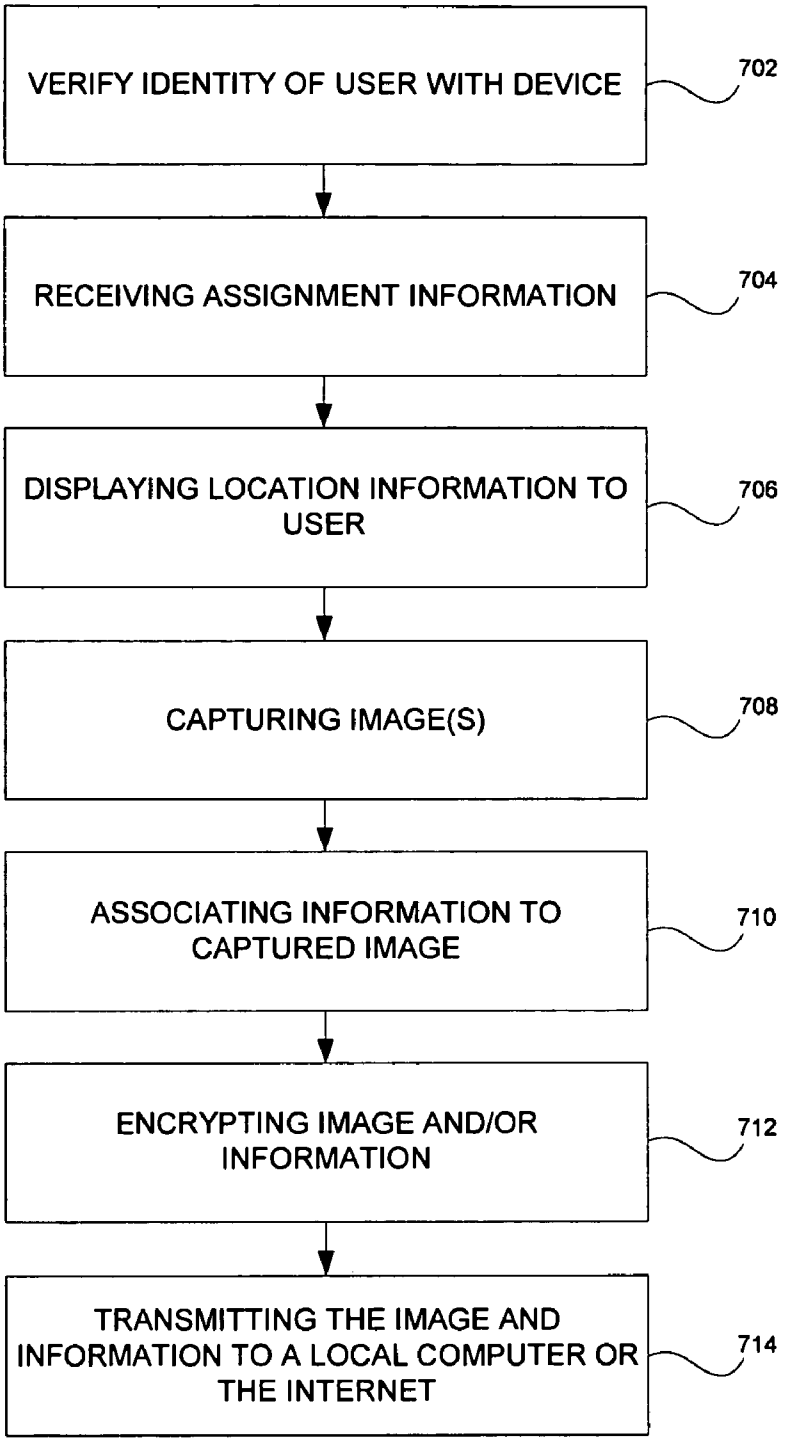
VERIFY IDENTITY OF USER WITH DEVICE
702
RECEIVING ASSIGNMENT INFORMATION
704
DISPLAYING LOCATION INFORMATION TO USER
706
CAPTURING IMAGE(S)
708
ASSOCIATING INFORMATION TO CAPTURED IMAGE
710
ENCRYPTING IMAGE AND/OR INFORMATION
712
TRANSMITTING THE IMAGE AND INFORMATION TO A LOCAL COMPUTER OR THE INTERNET
714

FIG. 8

DEVICE AND METHOD FOR EMBEDDING AND RETRIEVING INFORMATION IN DIGITAL IMAGES

CROSS REFERENCE TO RELATED APPLICATIONS

The present application is a continuation-in-part application of U.S. application Ser. No. 11/020,459, filed Dec. 22, 2004 entitled "SYSTEM AND METHOD FOR EMBEDDING AND RETRIEVING INFORMATION IN DIGITAL IMAGES", which is a continuation-in-part application of U.S. application Ser. No. 10/998,691, filed Nov. 29, 2004 entitled "DEVICE AND METHOD FOR EMBEDDING AND RETRIEVING INFORMATION IN DIGITAL IMAGES", the contents of both of which are hereby incorporated by reference.

BACKGROUND

1. Field

The present disclosure relates generally to digital image and data processing, and more particularly, to devices, systems and methods for embedding and retrieving information in digital images and using the information to organize, process and control the digital images, where the information may include location information, time and date information and user verification information.

2. Description of the Related Art

Photographs are taken for a variety of personal and business reasons. During the course of the year, an individual may take numerous photographs of various events. During these events, quite often there is a variety of different individuals and items present in these photographs. In the prior art, when one desires to catalog these images in a particular order, they usually are left to placing these images manually into photograph albums. This is a very extensive, manual procedure requiring a significant amount of time. In addition, it is very limited with regard to the amount of information that can be associated with the image in a quick and easy manner. While some photo albums allow the writing and placing of text, the entering of this data is a very time consuming and arduous affair. Once having sorted these images into particular albums which may represent categories of interest, it is extremely difficult to retrieve and/or reorganize the images into other categories.

With the advent of digital cameras and digital imaging, the process of organizing images and associating information with the images has become even more difficult. Firstly, upon capturing an image with a digital camera, the camera simply gives the image a numerical file name which usually has no meaning to the user and makes it difficult to retrieve at a later date. Secondly, with the technological advances in file size compression and increased capacity of storage media, several hundred images may be taken before a user downloads the images to a computer or other device, making it a very time consuming task to associate information to each image.

Furthermore, in the current environment, a need exists to verify information captured via digital images and to rapidly transmit this information from one location to another. However, no system or hardware currently exists to enable a user to capture and store images in a secure format containing information on the time and day, specific location and user identification of the images that were captured. This is a critical need, since this information can serve to verify the activities of the user, or to authenticate various data points.

Therefore, a need exists for techniques for easily associating information about an image to the image and using the information to control and retrieve the image. A further need exists for associating location information, date and time information and user verification information to a captured image.

SUMMARY

Devices, systems and methods for capturing, storing, allowing user input, receiving internal input, processing, transmitting, scanning, and displaying digital images is provided. Digital photography has gained a substantial share of the worldwide photographic market. More and more cameras record images in digital form and more and more of these images are stored digitally for retrieval or archival purposes on home and business computers and on the Global Computer Network, e.g., the Internet. The present disclosure describes hardware devices, systems and methods that will facilitate embedding information into digital images of any type (e.g., jpeg, bmp, tiff, etc.) to organize, control and manipulate these images both while in digital form, and later when in printed form.

According to various embodiments, the present disclosure describes methods and systems of encoding digital images whether still images or multiple images (such as various formats of video) with locational information, audio stream information, date and time information, and user identity information, and transmitting this information on the Global Computer Network, e.g., the Internet. The present disclosure also describes a hardware device or devices to be known as a Locational Image Verification Device, (LIVD) that will allow the user to perform the functions indicated above. Additionally, the present disclosure also describes a method of securing the information contained in the digital images so that other parties can assure that this information is genuine and has not been tampered with. Finally, the present disclosure describes a method of printing out these digital images with the locational, date and time, etc. information as part of the image.

BRIEF DESCRIPTION OF THE DRAWINGS

The above and other aspects, features, and advantages of the present disclosure will become more apparent in light of the following detailed description when taken in conjunction with the accompanying drawings in which:

FIG. **1**A is front view of a device for capturing digital images and embedding information in the captured images according to an embodiment of the present disclosure;

FIG. **1**B is a rear view of the device illustrated in FIG. **1**A;

FIG. **2** is a block diagram of various modules included in a device for capturing images and embedding information in the images in accordance with the present disclosure;

FIG. **3**A is front view of a device for capturing digital images and embedding information in the captured images according to another embodiment of the present disclosure;

FIG. **3**B is a rear view of the device illustrated in FIG. **3**A;

FIG. **4** is a flowchart illustrating a method for embedding information in a digital image according to an embodiment of the present disclosure;

FIG. **5** is a diagram of an exemplary system for managing a plurality of digital images in accordance with an embodiment of the present disclosure;

FIG. **6**A is a flowchart illustrating a method for receiving at least one image with its associated information and processing requests associated with the at least one image;

FIG. **6**B is a flowchart illustrating a method for retrieving an image and processing user requests;

FIG. **7** is a diagram of at least three records of a relational database employed in accordance with the present disclosure; and

FIG. **8** is a flowchart illustrating a method for verifying activities or assignments of a user employing a device according to an embodiment of the present disclosure.

DETAILED DESCRIPTION

Preferred embodiments of the present disclosure will be described hereinbelow with reference to the accompanying drawings. In the following description, well-known functions or constructions are not described in detail to avoid obscuring the present disclosure in unnecessary detail. Throughout the figures like reference numerals represent like elements.

Hardware devices, systems and methods thereof that will enable the embedding and retrieving of information in digital images are provided. The embedded information will enable a user to organize, process and control these images. The present disclosure will describe techniques for encoding digital images, whether single or multiple (such as various formats of video), with locational information, date and time information, and user verification information and for transmitting this information on the Global Computer Network, e.g., the Internet.

Referring to FIGS. **1**A and **1**B, a device **100** for capturing images and associating information about the captured images is shown. The device **100** includes a lens **102** coupled to a capture module, which will be described in detail below, for capturing an image and a viewfinder **104** for correctly positioning the device when capturing an image. The device **100** further includes a microphone **106** for acquiring audio, from the user of the device or from the subject of the image, which may be associated with the image.

A rear side of the device **100** is illustrated in FIG. **1**B where a display module **108** is provided for displaying the captured image. As will be described in more detail below, the display module **108** may include a touch screen for facilitating user input of information to be associated with a digital image. The device **100** further includes a storage module **110** for storing a plurality of images, a transmission module **112** for transmitting the plurality of images to another device, e.g., a personal computer, a personal digital assistant (PDA), a server residing on the Internet, etc., and a scanning module **114** for scanning and inputting information to be associated with an image and for reading information from printed images.

Referring to FIG. **2**, the various components of the device **100** will now be described. The device will contain a computer processing module **120**, e.g., a microprocessor. The computer processing module **120** will use computer software instructions that have been programmed into the module and conventional computer processing power to interact and organize the traffic flow between the various other modules. It is to be understood that the present disclosure may be implemented in various forms of hardware, software, firmware, special purpose processors, or a combination thereof. A system bus **121** couples the various components shown in FIG. **2** and may be any of several types of bus structures including a memory bus or memory controller, a peripheral bus, and a local bus using any of a variety of bus architectures. The device also includes an operating system and micro instruction code preferably residing in read only memory (ROM). The various processes and functions described herein may either be part of the micro instruction code or part of an application program (or a combination thereof) which is executed via the operating system.

It is to be further understood that because some of the constituent device components and method steps depicted in the accompanying figures may be implemented in software, the actual connections between the device components (or the process steps) may differ depending upon the manner in which the present disclosure is programmed. Given the teachings of the present disclosure provided herein, one of ordinary skill in the related art will be able to contemplate these and similar implementations or configurations of the present disclosure.

Capture module **122** will capture an image desired by the user in digital form. The capture module includes an image sensor, an analog-to-digital (A/D) converter and a digital signal processor (DSP). As the user pushes the device's shutter button **124**, light is allowed to enter through the lens **102** and shine on the image sensor, e.g., a charge-coupled device (CCD) or complimentary metal-oxide semiconductor (CMOS). The image sensor includes preferably millions of photosensors, e.g., pixels, wherein each pixel absorbs the light and transforms the light into an electric charge proportional to the intensity of light. Each charge is transmitted to an A/D converter where the charge is converted into a digital value representing the color the pixel will be, e.g., representing different intensities of red, green and blue. The digital values are then passed to the digital signal processor which enhances the image, compresses it and then stores it in a digital-file format in the storage module **110**. The storage module **110** includes internal storage memory, e.g., random access memory (RAM), or removable memory such as a CompactFlash card, Memory Stick, SmartMedia, MultiMediaCard (MMC), SD (Secure Digital) memory, or any other memory storage that exists currently or will exist in the future. The digital file format utilized to store the image is not critical, but may include standard file formats which currently exist or will exist in the future for example jpeg, tiff, bmp, gif, pcx, png or other file formats. If multiple images are captured, the images may be stored in various video formats which currently exist including Divx, Mpeg-2, Mpeg-3, Mpeg-4, Mpeg-5, Quicktime, or other video formats.

The device **100** will also contain a display module **108** for the user to view acquired images. This display may be in any current form in the art, including Liquid Crystal Displays (LCD), Light emitting diode displays (LED), Cathode Ray Tube Displays (CRT) or any other type of display currently existing or existing in the future. The display module **108** will also include an audio output device **128**, e.g., a speaker, headphone jack, etc., allowing the user to also hear audio output from the hardware device. An additional but optional embodiment of the present disclosure may also include video or computer output jacks that will allow the user to hook the subject hardware device to an external television display device or a computer.

The hardware device **100** of the present disclosure will contain a user input module **124** to either receive user instructions via text input by the way of a standard keyboard interface, or a character recognition capture device which translates user text input into alphanumeric characters. Preferably, the character recognition device is a touch screen which overlays the display module **108** and text is entered via a pen-like stylus. Such input devices are standard and currently available on many electronic devices including portable digital assistants (PDAs) and cellular telephones. Optionally, a microphone **106** may be further coupled to the input module **124** for capturing any audio information spoken by the user and the input module will further include an analog-to-digital

(A/D) converter for converting the spoken audio information into a digital format. Furthermore, the input module may include a voice recognition processor that translates the digital human voice into alpha numeric characters for user input.

The user will utilize the user input module after an image is captured to enter various data that will either be stored as a file associated with the digital image file or alternatively written as an additional part of the digital image file. By example, if the digital image is recorded by the hardware device as jpg**101** or tif**101** or bmp**101** where these descriptions indicate the name of the captured digital image, then another file will be created for each captured digital image. This file would be the information associated file. In the above example, the image jpg**101** would now have an additional file called info**101** (or any other name that the hardware device selects). This digital file would receive and contain the user inputted information. Alternatively, the user input module may write its information directly to the previously stored digital file. By example, if the digital image is recorded by the hardware device as jpg**101** or tif**101** or bmp**101** where these descriptions indicate the name of the captured digital image, then this file will be appended with the additional information written from the user input module, for example, in the header of the digital image file.

The device **100** will also include a user verification module (UVM) **132**. The user verification module **132** will indicate and verify the identity of the user of the device **100** at the time of the image capture. The user verification module **132** may execute a password protection algorithm or may include an identity capture device, either incorporated into the device **100** or coupled externally via a cable. The identity capture device may be a biometric device, such as a retinal scanning device, finger print reader, facial recognition reader or another type of user identity verification input device which will collect information on the user to be compared to information that has previously been stored in the device's memory. One such exemplary fingerprint reader is the BioTouch™ fingerprint reader commercially available from Identix Incorporated of Minnetonka, Minn. It is to be noted that identity detection devices such as biometric devices are common and are currently widely in use. It is to be further noted, that identity verification devices that are not yet in use such as DNA detection, etc, would also be compatible with device **100**. It is to be appreciated that the information utilized by the user verification module **132** to verify a user may be provided by other existing components of device **100**, for example, capture module **122** may capture am image of the face of the user which may then be processed by a facial recognition algorithm executed by the user verification module **132**. In this instance, no external hardware would be required.

A locational information module **134** will be provided for determining a location of where an image is being captured. The locational information module **134** may include a receiver and antenna employing conventional locational information processing technology such as Global Positioning Satellite (GPS) Technology, Loran Technology, or any other available locational technology, to indicate the exact location, e.g., latitude, longitude and altitude, of the device **100** at the time of image capture. Exemplary GPS receivers and antennas are described in U.S. Pat. Nos. 5,654,718 and 6,775,612, the contents of both of which are herein incorporated by reference. It is to be appreciated that the latitude, longitude and altitude may be used to interact with maps stored in memory or in the storage module **110** of device **100** to determine the city, state or address of the location where the image was captured. Alternatively, the coordinates may be associated with the image file upon capture and the location will be determined after the image and associated information is transferred to a computer.

Furthermore, the device **100** will include a date and time module **136** and a picture sequence module **138**. The date and time module **136** will use standard computer chip processing technology widely in use, or alternatively, input from locational information module **134**, e.g., a GPS receiver, to supply the date and time of the image capture. The picture sequence module **138** will record the number of the digital image for the session that the image was captured in, or the image number for the date that the image was captured on.

The device **100** will also include an auxiliary input computer module **126**. This module will allow the hardware device to automatically and simultaneously (with image capture) store information in the associated file, or alternatively, in the same file as the digital image. The information from the auxiliary input module **126** will flow directly from the various input modules and processors contained in the hardware device. These modules and processors may include but are not limited to user verification module **132**, locational information module **134**, date and time module **136**, picture sequencing module **138** and various other input processors that will provide additional information relevant to the digital information, all information which the auxiliary input module will store as information in the info files or directly as addenda in the digital image files. Knowledge of the art, indicates that the individual processors such as GPS, date time and voice storage, may be separate processors or may also be incorporated as one computer processor.

The device **100** will also include an encryption module **140**. The encryption module **140** will use conventional code encryption algorithms currently in use or that will be in use in the future such as DES, Triple DES, Blowfish, RSA, MD5, etc. to encrypt the data information that comes into the user input module **124** and auxiliary input module **126**, and optionally, to encrypt the digital image file. In one embodiment of the present disclosure, the encryption module **140** will always encrypt the data information, but in other embodiments, the user will select whether to encrypt the data or to leave the data unencrypted.

After the digital image is captured and stored on the device **100**, these files will be transferred to the user's local computer hardware device or to the Global Computer Network, e.g., the Internet, or to the user's local device and then to the Global Computer Network. This transfer will be done by transmission module **112** including hardwired and/or wireless connectivity. The hardwire connection may include but is not limited to hard wire cabling e.g., parallel or serial cables, USB cable, Firewire (1394 connectivity) cables and the appropriate port. The wireless connection will operate under any of the various known wireless protocols including but not limited to Bluetooth™ interconnectivity, infrared connectivity, radio transmission connectivity including computer digital signal broadcasting and reception commonly referred to as Wi-Fi or 80211.X (where x denotes the type of transmission), or any other type of communication protocols or systems currently existing or to be developed for wirelessly transmitting data. Furthermore, the transmission module **112** may include a removable memory card slot for accepting any of the various known removable memory cards, transferring the image files to the removable card, and subsequently the images may be uploaded to a computer from the removable memory card by an appropriate reader coupled to the user's computer. The file name of each digital image file and/or associated file will be recorded in a relational database either on the user's local computer or the Global computer network, as will be

described in detail below. This database will contain information on any file(s) related to each digital image including audio and video files, or other associated image files.

The user, or any other party, may print out any of the digital images described herein. The printing will be done once the images are stored on the local computer or the Global Computer Network and recorded in a relational database as described above. When the images are printed out, the computer that prints the image will cause the image to be printed with symbology that encodes that file name of the image and file location of the image, or any other coding that will provide access to the file name and file location. This file name will be the assigned name that the image was stored in at the relational database, as well as the assigned location of the relational database whether in the user's local computer or at a stored location on the Global Computer Network. The symbology may be in any form currently practiced in the art including barcodes (e.g., UPC, EAN, PDF417, etc.), photosymbols, standard or specialized text, etc., or any future type of symbology. Of course, as stated, any symbology utilized will represent or lead to the file names and file locations of the digital images.

The device **100** will further include an integrated scanning module **130** that will contain a light source, e.g., LED, and photocell coupled to the computer processing module **120**, or alternatively, will includes a separate decoder engine that will decode the data received by the photocell before sending it to the computer processing module **120**. Knowledge of the art reveals that many different types of scanners currently exist and the inventor realizes that the type of scanner would depend upon the type of symbology that is utilized in the printed images. The user will be able to scan the printed digital images with the device **100** and the scanning module **130** would scan in the symbology and using standard computer programming and the computer processing module, the device would translate the symbology to extract the name of the digital image and the file locations (whether local or on the Global Computer Network) of the digital image. Alternatively, the scanner may extract some type of marker or symbol, e.g., an identifier, that when presented to the relational database would indicate the file name and file location of the digital images. This information would then be transferred to the transmission module which will transmit it to the local or Global Computer Network which will then submit it to the relational database containing information on the digital images. Using standard computer programming and processing, this database would then locate the stored digital image and associated files/information and also process the users request(s) regarding the digital image.

If the subject hardware device is coupled to a computer via the transmission module **112**, then the hardware device **100** will receive back and display the processed requests on the display module **108**. By example, a user may scan in a printed digital image with the hardware device **100** and then receive that image for display on his device, along with auxiliary information on the image, and along with auxiliary and associated audio and video files that can be displayed on the hardware device via the display module **108**.

Referring to FIGS. **3**A and **3**B, another embodiment of the present disclosure is illustrated. Here, a device **200** according to the principles of the present disclosure is embodied as a mobile phone including the modules and architecture illustrated in FIG. **2**. Device **200** includes a microphone **206** having the same functionality as microphone **106** and is further coupled to a communication module **240** for encoding a user's speech to be transmitted via antenna ANT using CDMA, PCS, GSM or any other known wireless communication technology. Device **200** further includes display module **208** for displaying captured images and preferably the display module will have a touch screen overlaid upon it which will enable user input via a stylus. The user may also enter phone numbers to be dialed via the touch screen. As is known in the mobile phone art, device **200** may include a full QWERTY keyboard **224** as an input module to enter text information to be associated to captured images. Earpiece or speaker **228** may be utilized to play audio clips associated with images in addition to being coupled to the antenna ANT and a decoder for receiving and decoding voice communication from another mobile phone.

Preferably, the antenna ANT is coupled to a transmission module similar to the one described above in relation to FIG. **2**. The transmission module will compress and encode captured images for transmission using any known wireless communication technology. Transmitting images via wireless technology will facilitate the transferring of images to an online photo storage site or to an online photo developing service provider.

Referring to FIG. **3**B, a rear side of device **200** is shown. Capture module **222** is employed for capturing images and when disposed on a rear side of device **200** is used in conjunction with display module **208** for positioning a subject of the image in lieu of a viewfinder. In this embodiment, the capture module **222** may also be used in conjunction with the scanning module to read symbology associated with an image. Here, the capture module will acquire an image of the symbology and the scanning module will further include a digital signal processor executing an algorithm for deciphering or decoding the symbology from the capture image. The use of an image sensor to read symbology, e.g., a barcode, is known in the art and systems employing such technology is commercially available from Symbol Technologies of New York.

Similar to the embodiments described in relation to FIGS. **1** and **2**, device **200** includes a storage module **210** for storing images via a removable memory card.

In utilizing the hardware device(s) described herein, the user will be able to accomplish the various applications of the disclosure which are described below in relation to FIG. **4**.

A user takes several pictures with his imaging device (step **302**). In one example, the picture is of a baby in Las Vegas. The next picture is of a Monet painting hanging in a gallery in Las Vegas. Another picture is of the user's wife. At the end of taking pictures or alternatively, immediately after taking each individual picture, the user goes back to the device **100**, **200** and using either keystroke input via input module **124** or voice recognition software via a microphone, or any other input means, the user enters information regarding the pictures. The user is prompted, e.g., either via the display module or by spoken word via the speaker, to provide the following information regarding the pictures, i.e., the images taken (step **304**):

(1) The file location to store the photos or images once they are transferred to permanent memory storage, e.g., a local computer or a server residing on the Internet. For the first picture the user indicates that he would like the photo stored under his baby picture file, e.g., a folder on his local computer, for the second picture his famous art file, and for third picture his file with pictures of his wife.

(2) The user is then asked via the speaker, or prompted on the display module **108**, **208**, if he wants to attach any audio or video to the images to stay associated with the images once they are stored. He indicates that for the first image he wishes to record an audio file indicating: "this is a picture of my baby girl Samantha here in Las Vegas. Boy is she cute." For the

second image: "Loved this Monet and had previously seen it in at the Louvre last year" for third: "Jenny is wearing the new dress that I just bought her" also for number three picture please attach the video file entitled Jenny's day in Las Vegas to this picture.

(3) The user now is asked via text input or voice recognition or any other input means, whether they will be storing these photos online. The answer would be either Yes or No. If the user answers Yes, a predetermined site could have been selected and pre-stored in the camera hardware device (for instance the Ofoto or Imagestation site) and selected photos would automatically go to that location for upload when the digital images are transferred.

The hardware device retrieves from the various modules the time and location of the images. The hardware device also retrieves from either memory that was pre-stored in the hardware or via the user verification module **132** the name and identification information on the owner of the hardware device or any guest using the device. Moreover, the hardware device will also store the number of the digital image by recording the order that the image was taken in, e.g., the sequence number, via picture sequence module **138**. The user can also flag (select) any images that he would like to have printed or e-mailed.

The various information is then complied and either stored as a separate information file associated to the image or appended to the digital image file and stored for example in the header of the image file (step **306**).

The user will now transfer the images to his local computer workstation which may or may not be connected to the Global Computer Network via transmission module **112** (step **308**). When the computer receives these imbedded 'smart pix' images, the computer will:

a. Sort and file the images in the file or folder selected including storing the files with the associated information and audio and video attachments;

b. Perform any actions requested for the photos including, e-mail the photos to a selected user or users and print the photos on designated printers in a size pre-selected; and

c. With a connection to the Global Computer Network, automatically upload the photos and associated attached files to the specified server site (Ofoto, or Smartpix, for instance) for storage and retrieval.

Once the images are printed, the user will be enabled, regardless of the time elapsed since the images were taken, to take a hardware device (possibly the camera device that the user utilized to take the images, or another hardware reader device) and scan it over a photo. The device will read the symbology in the images and using standard communications techniques including Wifi or Bluetooth, Infrared, or Cabling, etc., the scanning/reading device will transmit the photo identifier information to a computer processor which then may optionally transfer it to the Global Computer Network. The device will then receive the information back from the local processor or Global Computer Network and will then locate the file or files that contain the image and associated attachments on the local or Global Computer Network.

By example, the user holds the scanning device over images of a child on the beach and an audio track then comes back: "Daddy I love this beach and I love you". The user would also be able to instantly receive information on the photo such as when and where the photo was taken and who the photographer was. The user could also request that the photo be printed to a local printer in a specific size or that the picture be e-mailed to a selected recipient. Other user requests could include asking the computer to display all associated photos, and file attachments, or to store the photo in a selected location on the local computer or the Global Computer Network.

Referring to FIG. **5**, an exemplary system for managing a plurality of digital images in accordance with an embodiment of the present disclosure is illustrated. Digital imaging device **100**, **200** will transfer the digital images to a user's local computer **402** or to an online imaging web server **408**, e.g., Ofoto, where the plurality of images will be processed and manipulated as will be described below. The user's local computer **402** may connected to communications network **410**, e.g., the Internet, by any known means, for example, a hardwired or wireless connection **403**. It is to be appreciated that the network **410** may be a local area network (LAN), wide area network (WAN), the Internet or any known network that couples a plurality of computers to enable various modes of communication via network messages. It is to be understood that the present disclosure may be implemented in various forms of hardware, software, firmware, special purpose processors, or a combination thereof. In one embodiment, the present disclosure may be implemented in software as an application program tangibly embodied on a program storage device. The application program may be uploaded to, and executed by, local computer **402** or web server **408**. The local computer **402** and web server **408** will include an operating system and micro instruction code. The various processes and functions described herein may either be part of the micro instruction code or part of the application program (or a combination thereof) which is executed via the operating system. In addition, various other peripheral devices may be connected to the computer platform, e.g., the local computer **402** and web server **408**, by various interfaces and bus structures, such as a parallel port, serial port or universal serial bus (USB), for example, additional storage devices **404**, **426** and a printer **406**.

Alternatively, the user's local computer **402** may connect to the network **410** via an Internet Service Provider (ISP) **412**, where once connected, the ISP server **412** will manage the flow of the digital images, e.g., e-mailing the images to other users **414**, **416**, **418** of the network **410**, transmitting the images to online storage web servers **420**, and/or manage the flow of information from various web sites connected to the network **410**, e.g., content providers residing on servers **422**. Furthermore, the ISP **412** will include a mail server for handling electronic mail, e.g., e-mail. The mail server will include the appropriate applications and/or servers for handling incoming mail, e.g., Simple Mail Transfer Protocol (SMTP), and outgoing mail, e.g., Post Office Protocol 3 (POP3).

Although the physical environment shows the connected devices as computers, such illustration is merely exemplary and may comprise various digital devices, such as PDAs, network appliances, notebook computers, etc. The computing devices may communicate to the servers **408**, **412**, **420**, **422** and network **410** via any known communication link **424**, for example, dial-up, hardwired, cable, DSL, satellite, cellular, PCS, wireless transmission (e.g., 802.11a/b/g), etc. Furthermore, the devices will communicate using the various known protocols such as Transmission Control Protocol/Internet Protocol (TCP/IP), File Transfer Protocol (FTP), Hypertext Transfer Protocol (HTTP), etc.

FIGS. **6**A and **6**B are flowcharts illustrating methods being executed by programmable instructions either at the local computer **402** or the imaging web server **408**. Although the following description will be described in relationship to methods being implemented by software on the local com-

puter **408**, the methods can be implemented at web server **408** after the images are transferred to the web server **408** via the Internet.

Referring to FIG. **6**A, once information is associated to at least one digital image, the image and associated information is transferred from device **100**, **200** and received by local computer **402** (step **502**). The local computer **402** will parse the associated information and store each piece of data as a separate field in a single record in a relational database (step **504**). An exemplary database **600** is shown in FIG. **7**. The database **600** includes a record **602**, **604**, **606** for each image and further includes a plurality of fields for each record. For example, record **602** includes an identifier field **608** for storing any alpha-numeric identifier associated with the digital image, an image field **610** including the file name of the image, a sequence number field **611** for storing an image sequence number, an info field **612** which may include user information, subject information, image description, date, time, etc., and a file location field **614** for storing the location where the image file is stored. Record **602** also includes an audio field **616** for storing the file name of an associated audio file and a video field **618** for storing the file name of an associated video file. Record **602** further includes request fields, e.g., online storage request field **620**, print request field **622** and e-mail request field **624**, which will cause the local computer to process and take further action with regard to the image transferred, which will be described in more detail below.

Next, in step **506**, the local computer **402** will use relational database programming, e.g., Structured Query Language (SLQ), and standard computer processing power to respond to any user requests for each of the digital images. These requests include but are not limited to displaying the digital images in a particular sequence, or sorting the digital images by owner, date, location, description, etc. The local computer **402** will query each record of the relational database to determine if an action has been requested. For example, the local computer will query e-mail request field **624** to determine if the image is to be e-mailed to another. As shown in FIG. **7**, e-mailing the digital images to a person has been indicated by the user, with such person's e-mail address being stored in the relational database, e.g., bob@aol.com. As another example, the local computer **402** will query print request field **622** to determine if the user has flagged the image to be printed upon transfer. The record may include further information regarding printing the image such as a printer location (either local or on the Global Computer Network) and in a size or format that has been requested by the user. As an even further example, the local computer **402** may query online storage request field **620** to determine if the user wants to store the image on a public server for viewing purposes. The field **620** may include the name or location of a professional photo processing location on the Internet, such as ImageStation or Ofoto. Although not shown, each record may include other request fields, for example, fields for requesting the display of information on any selected digital image, such information being contained in the relational database or the display of related audio or video or image files. The inventor understands and current computer database and computer processing techniques teach, that various other requests to the computer processor regarding the digital images and associated files/information may be made by the user, and by using standard programming and computer processing power these requests will be completed by the computer and presented to the user.

The user, or any other party, may print out any of the digital images. The printing will be done once the images are stored on the local computer **402** or a web server **408** on the Global Computer Network and recorded in the relational database **600** as described above. When the images are printed out, the computer that prints the image will cause the image to be printed with symbology that encodes the file name of the image and file location of the image. This file name will be the assigned name that the image was stored in at the relational database, as well as the assigned location of the relational database whether in the user's local computer or at a stored location on the Global Computer Network. Alternatively, the symbology will represent a unique identifier that is created for each image as stored in field **608** of each record in the database. The symbology may be in any form currently practiced in the art including barcodes, photosymbols, standard or specialized text, etc, or any future type of symbology. Of course, any symbology utilized will represent the file names and file locations of the digital images either directly or via an identifier.

At any time, a user may now scan the printed digital images. This scanning may be done by any type of scanner that could read the symbology contained in the printed digital images. Many different types of scanners that read symbology currently exist and the inventor realizes that the type of scanner would depend upon the type of symbology that is utilized in the printed images. Preferably, the scanning of a printed digital image will be performed by the hardware devices **100**, **200** described above including the appropriate scanning module.

The device **100**, **200** would scan in the symbology and using standard computer programming and computer processing, translate the symbology to extract the name of the digital image and the file locations (whether local or on the Global Computer Network) of the digital image, or alternatively, the identifier of the record relating to the image. This information is then transmitted to the user's local computer along with a user request. In another embodiment, this information would be submitted to the location of the computer indicated in the symbology and, at that location, this query would be submitted to the relational database containing information on the digital images.

The local computer **402** will receive the file name and location or image identifier for at least one image in step **552**. Using standard computer programming and processing, the identifier will be submitted to the database (step **554**) and the database would then locate the stored digital image and associated files and/or information via its corresponding record (step **556**). Once the record is found, the computer will process any user request(s) regarding the digital image that was either transferred with the identifier or after the identifier located the appropriate record. Such requests could include but would not be limited to displaying the digital images in a particular sequence at the local computer or on the imaging device **100**, **200**; e-mailing the digital image to a person that has been indicated by the user, with such person's e-mail address being stored in the relational database; and printing the digital images at a printer location (either local or on the global computer network) and in a size or format that has been requested by the user. Furthermore, a request may include a request for displaying information on any selected digital image, such information being contained in the relational database, for example, displaying audio or video or image files that are related to the selected digital image. Depending on the request, the image and associated information may be displayed or presented to the user at the local computer **402** or the image and associated information may be transmitted to the imaging device **100**, **200** for presentation to the user.

By example, the user holds a scanning device, e.g., imaging device **100**, mobile phone **200**, etc., over an image of a child on the beach processed via the system and method of the present disclosure. An audio track then comes back: "Daddy I love this beach and I love you" audibly produced via speaker **128**, **228** on the device **100**, **200** respectively, or alternatively, the image and audio track are presented to the user if they are at the local computer **402**. The user would also be able to instantly receive information on the photo such as when and where the photo was taken and who the photographer was. The user could also request that the photo be printed to a local printer in a specific size or that the picture be emailed to a selected recipient. These further requests could be entered either via a keyboard/mouse at the local computer **402** or via input module/speech recognition at the device **100**, **200**. Other user requests could include requesting the computer to display all associated photos, and file attachments, or to store the photo in a selected location on the local computer or the Global Computer Network.

It is to be appreciated that the software utilized to implement the above methods could reside at server **408** with relational database **600** residing in storage medium **426**. Here, the user may employ local computer **402** to transfer the digital images and requests to server **408**. In this embodiment, a user could access any of the plurality of images and associated information from any location in the world having access to the Internet. Furthermore, the use of a mobile communication device such as device **200** described above would facilitate the transferring of images and requests to the server **408** by way of a wireless connection either directly to the server **408** or via ISP **412** to the server **408**.

The principles of the present disclosure will allow users numerous applications for these imbedded "smart pix" including retrieving image and information from third parties, e.g., a publisher or clearing house. By way of example, a user could see an image in a newspaper or magazine and the user could scan the photo with the hardware device described above. The user could then order the photograph to be downloaded to the user's local computer; request and receive information from the publisher of the image; request and receive other information on the image including attachments; e-mail the photo to someone else; and/or direct the photo to be printed for pickup at a local computer printer or at a commercial printer location.

As a further application of the principles of the present disclosure, an operation of device **100**, **200** utilized as a locational image verification device (LIVD) **100** will now be described in relation to FIG. **8**.

Initially, when a user receives the locational image verification device (LIVD) **100**, the user will initialize the device **100** by registering his identity with the user verification module (UVM) **132** (step **702**). The user verification module (UVM) **132** will record the identification information on the user and store it in the storage module **110** or computer memory. This information can later be compared to any other user that uses the user verification module (UVM) **132** so as to establish the identity of the device user.

The user will use the transmission module **112** of the device **100** to receive information through the Global Computer Network from the user's office or supervisor as to the specific geographic assignments that the user has been given (step **704**). In a preferred embodiment, this information will be transferred from the user's office or supervisor from a standard relational database that will contain data on the specific locations that the user is expected to visit along with tasks associated with each location. Alternatively, the user may use the user input module **124** to input the various locations of his/her assignment. In either event, this information will be maintained in the device **100** in standard database form in the storage module **110**, wherein the user can use the display module **108** to display this information and the user input module **124** and computer processing modules **120** to interact with this information. In another embodiment, this information may be encrypted so that no other person but the user would have access to this information. In this embodiment, the user would be required to use the user verification module **132** to establish his/her identity and, only when identity is established, the computer processing module **120** would direct the encryption module **140** to unencrypt the information.

The user may be routed to his assignments by means of the locational informational module **134** (step **706**). This module will receive the information as to specific assignments from the storage module **110**, and then display directions on routing with the display module **108**. Thus, the user of the LIVD **100** will receive geographic directions to his specific assignments.

When the user arrives at his specific assignment, he may use the device **100** to verify and capture information (step **708**). The user will tell the device that he is at the location and ready to proceed by informing the user input module **124**, via either text input or spoken word. Alternatively, the auxiliary input module **126** will receive information from the locational information module **134** which will notify the computer processing module **120** to notify the display module **108** that the device has arrived at the assigned location.

Optionally, the user will be asked to use the user verification module **132** to re-verify the user's identity at the time of image capture. If the identify of the user is confirmed by the computer processing module **120**, then the device will give the user a certain time interval to use the capture module **122**. This time interval may have been set by the user when the device was initialized, or set as a default in the device. The user's identity will be associated to the captured images and stored in the database as will be described below.

The LIVD **100** will now capture digital image(s) and audio streams. This information will then be written to the storage module **110** with additional information provided by the auxiliary input module **126**. This module will provide information from the locational information module **134**, the date and time module **136**, the user verification module **132**, the picture sequence module **138** and any information provided by the user input module **124**. All of this information will be stored as a file associated with the digital image file, or alternatively, written as an additional part of the digital image file (step **710**), as described above.

In a preferred embodiment, all of the information captured by the capture module **122** including the associated information from the auxiliary input module **126**, e.g., time and date, the user input module **124**, e.g., an audio stream, and the user verification module **132**, the user's identity, would be immediately encrypted by the encryption module **140** (step **712**). The encryption module **140** will use standard code encryption algorithms currently in use or that will be in use in the future such as DES, Triple DES, Blowfish, RSA, MD5, etc. The user of the device would not have the ability to alter any information that is captured and stored since this information is being encrypted immediately upon capture and then securely stored. Only the receiver of this information (in this example the user's supervisor) would have the ability to unencrypt and modify the information after it has been transmitted.

The user may now use the transmission module **112** to transfer the information to his office or supervisor and/or any party that wants to receive that information (step **714**). If the

information has been encrypted by the encryption module **140**, the receiving party would need to have the encryption key to unencrypt and alter the information. When the data is received, by utilizing a standard relational database, the receiving party will now be able to display images for each location as well as any audio streams for each location, with additional information such as date and time of capture, picture sequence, user identity, and any user notes for each image. The database will also be able to tell the supervisor/user of any locations/events that were not accomplished. Referring to FIG. **7**, the information captured and associated will either be incorporated to table **600** or stored as a separate table **628** which is linked to table **600** via the use of private and foreign keys as is known in the art. Record **630** of table **628** will include all the information relevant for verifying at least one assignment or at least one task of an assignment assigned to the user. For example, record **630** will include an identifier field **632** which will also be used as a key for linking the tables, a location of image capture field **634**, a date of image capture field **636**, a time of image capture field **638**, a user verification field **640**, a picture sequence field **642** and an assignment completed field **644**. Determining whether an assignment is completed can be accomplished either by the user indicating so via the input module or via the computer processing module by comparing user responses to prompted tasks.

Once the images are transmitted and unencrypted, the digital images may be printed with symbology incorporated into the image that fully documents the file storage location of the image, as well as the user identity of the image, date and time of image capture, and picture sequence number, as described in detail above.

In utilizing the locational image verification device described herein, the user will by able to accomplish the various applications of the present disclosure which are described below:

An employee (user) is assigned the responsibility of checking out several residences that have been damaged by a natural disaster. The employer groups these residences along a logical route and downloads this information to the user through the Global Computer Network. The user then receives or transfers this information to his locational image verification device (LIVD) **100**. The user takes this device with him as he visits each residence. Using the locational information module **134**, the device provides the user with directions via display module **108** to navigate to each residence. During the visit, the user is required to provide proof of damage for the residence by using the LIVD **100**. The user is able to photograph the residence damage and each picture is encoded with information detailing the exact location that the image was captured at, the time and date that the image was captured, and the identity information on the person who captured the image. This information is encoded with encryption algorithms immediately upon storage so it is virtually tamper proof. These image files are then transferred wirelessly (or by cable, etc) to the employer. The employer then has proof of the damage to the residence, proof that the damage occurred at a specific address location, proof of the identity of the person who captured the image and visited the residence, and proof of the date and time that the image was captured.

In another example, an employee (user) is assigned by his employer to visit and assess various clients in a social services job situation. The employer groups these residences along a logical route and downloads this information to the user through the Global Computer Network. The user then receives or transfers this information to his locational image verification device (LIVD) **100**. The user takes this device with him as he visits each residence. Using the locational information module **134**, the device provides the user with directions via display module **108** to navigate to each residence. During the visit, the user is required to provide proof that each client was visited at a specific time and location. The LIVD **100** is used by the user for the purposes of this proof. The user is able to photograph each client and each picture is encoded with information detailing the exact location that the image was captured at, the time and date that the image was captured, and the identity information on the person who captured the image. The user is also able to record audio annotations for each digital image. This information is immediately encoded with encryption algorithms upon storage so it is virtually tamper proof. This image files are then transferred wirelessly (or by wired cable, etc.) to the employer. The employer then has proof of the visit to the residence, proof that the visit occurred at a specific address location, proof of the identity of the person who captured the image(s) and visited the residence, information on each of the digital images, and proof of the date and time that the image was captured. If a visit was not made, the employer can also be notified of this fact by his computer who is tracking the user information.

In a further example, a military forces personnel is assigned the responsibility of performing various duties on a particular day. The military force personnel's supervisor wants to verify that this mission was accomplished. The personnel is given an LIVD **100** that he carries with him during the mission. The military force personnel initializes the device to establish his identity. The LIVD **100**, **200** then is activated and records onto a storage device various images and audio streams during the day. The capture of this information stream of images and audio can be either at random times during the day or at predetermined times. The capture of images and audio can be continuous (e.g. audio/video capture) or in single or multiple images. Each image is encoded with locational information, date and time information, and user identification information. The audio files are matched to the digital image files. The user may be required at various times during the day to randomly or at pre-determined intervals to re-verify his identification information. All of the captured information can be encrypted in secure formats immediately upon capture and storage and before transmittal to the personnel's supervisor. The resulting transfer will give the supervisor a complete and secure record of the user's mission, with documented specificity as to the time/location of various events.

While the disclosure has been shown and described with reference to certain preferred embodiments thereof, it will be understood by those skilled in the art that various changes in form and detail may be made therein without departing from the spirit and scope of the disclosure as defined by the appended claims.

What is claimed is:

1. A locational image verification device for verifying an assignment of a user comprising:

a user verification module for verifying an identity of a user of the device, wherein upon verification, the user verification module enables operation of the device and provides an assignment to the user;

a capture module for capturing an image relating to the assignment and creating a digital image file, wherein the user verification module verifies the identity of the user of the device at a time of the image capture;

a locational information module for determining a location of the device when capturing the image;

a date and time module for determining a date and time of the image capture;

a processing module for associating the assignment, the user identity, location information and the time and date to the digital image file; and

an encryption module for encrypting the digital image file and associated information upon image capture.

2. The device as in claim **1**, further comprising a microphone for acquiring audio to be associated to the digital image file.

3. The device as in claim **1**, further comprising a display module for displaying the captured image.

4. The device as in claim **3**, wherein the display module is adapted to prompt a user to input information regarding the captured image.

5. The device as in claim **4**, further comprising a character recognition capture device coupled to the input module for entering information regarding the capture images.

6. The device as in claim **5**, wherein the character recognition device is a touch screen overlaid upon the display module.

7. The device as in claim **3**, wherein the display module displays geographic directions to the user from at least one location to a location of the assignment.

8. The device as in claim **3**, wherein the display module further includes an audio output device for audibly prompting a user to input information regarding the captured image.

9. The device as in claim **1**, further comprising a storage module for storing at least one digital image file and the information associated to the digital image file.

10. The device as in claim **9**, wherein the storage module is internal storage memory or removable storage memory.

11. The device as in claim **1**, further comprising a transmission module for transmitting at least one digital image file and its associated information to a computing device.

12. The device as in claim **11**, wherein the transmission module is a hardwired connection, a wireless connection or a removable memory card slot for receiving removable memory.

13. The device as in claim **1**, further comprising an auxiliary input module for generating auxiliary information related to the captured image, wherein the auxiliary information is date, time, sequence number of the capture image and user information.

14. The device as in claim **1**, further comprising a scanning module for scanning information to be associated with the digital image file.

15. The device as in claim **1**, further comprising a scanning module for reading a symbology associated with a printed digital image and wherein the processing module is adapted to use the symbology to retrieve the associated information of the digital image file.

16. The device as in claim **1**, further comprising a communication module coupled to an antenna for wirelessly receiving and transmitting communication messages.

17. The device as in claim **16**, further comprising an audio output device for audibly prompting a user to input information regarding the captured image and for audibly producing the received communication messages.

18. The device as in claim **16**, further comprising a transmission module coupled to the antenna for transmitting at least one digital image file and its associated information to a computing device.

19. The device as in claim **16**, wherein the capture module is coupled to a scanning module for decoding a symbology captured as a digital image by the capture module.

20. The device as in claim **19**, wherein the processing module is adapted to use the symbology to retrieve the associated information of the digital image file.

21. The device as in claim **1**, wherein the encryption module is further adapted for encrypting the digital image file and associated information immediately upon image capture.

22. The device as in claim **1**, further comprising an input module for inputting information regarding the captured image, wherein the processing module associates the inputted information to the digital image file.

23. The device as in claim **22**, wherein the processing module is adapted to create a separate information file including the location and inputted information that is linked to the digital image file.

24. The device as in claim **22**, wherein the processing module is adapted to append the location and inputted information to the digital image file.

25. The device as in claim **1**, further comprising a display module for displaying to a user geographic directions to the location.

26. The device as in claim **1**, further comprising a picture sequence module for recording a sequence number of the captured image, wherein the processor module associates the sequence number to the captured image.

27. A method for verifying an assignment of a user, the method comprising the steps of:

verifying a user of the device to enable use of the device;

upon verification, receiving assignment information for the user;

capturing an image with an imaging device relating to the assignment and creating a digital image file;

determining an identity of the user at a time of the image capture;

determining a location of the device upon image capture;

determining a date and time of the image capture;

associating the assignment information, the user identity, location information and the date and time to the digital image file; and

encrypting the associated information and digital image file upon image capture.

28. The method as in claim **27**, further comprising the step of transmitting the encrypted information and digital image file to a computing device.

29. The method as in claim **27**, wherein upon verification of the user, receiving geographic directions from at least one location to a location of the assignment and displaying the directions to the user.

30. The method as in claim **29** further comprising the step of prompting the user for information regarding at least one assignment.

31. The method as in claim **30**, wherein the prompting step includes displaying at least one question to the user.

32. The method as in claim **31**, further comprising the step of retrieving the associated information by scanning a symbology printed with the captured digital image.

33. The method as in claim **30**, wherein the prompting step includes audibly producing at least one question to the user.

34. The method as in claim **30**, further comprising the steps of:

receiving text input via a character recognition capture device regarding the capture image;

translating the text input into alphanumeric characters; and

associating the inputted text to the digital image file.

35. The method as in claim **30**, further comprising the steps of:

receiving spoken input via a microphone; and

associating the spoken input to the digital image file.

36. The method as in claim **30**, further comprising the steps of: transmitting the encrypted information and digital image file to a computing device; unencrypting the information and digital image file at the computing device; and verifying the location and date and time of the image capture.

37. The method as in claim **36**, further comprising the step of verifying at least one task of the assignment information has been completed.

38. The method as in claim **27**, wherein the associating step includes creating a separate information file including the associated information that is linked to the digital image file.

39. The method as in claim **27**, wherein the associating step includes appending the associated information to the digital image file.

* * * * *

EXHIBIT C

US007991792B2

(12) **United States Patent**
Rothschild

(10) **Patent No.: US 7,991,792 B2**
(45) **Date of Patent: Aug. 2, 2011**

(54) **SYSTEM AND METHOD FOR EMBEDDING SYMBOLOGY IN DIGITAL IMAGES AND USING THE SYMBOLOGY TO ORGANIZE AND CONTROL THE DIGITAL IMAGES**

(75) Inventor: **Leigh M. Rothschild**, Sunny Isles Beach, FL (US)

(73) Assignee: **Rothschild Trust Holdings, LLC**, Sunny Isles Beach, FL (US)

(*) Notice: Subject to any disclaimer, the term of this patent is extended or adjusted under 35 U.S.C. 154(b) by 159 days.

(21) Appl. No.: **12/317,727**

(22) Filed: **Dec. 29, 2008**

(65) **Prior Publication Data**

US 2009/0171915 A1 Jul. 2, 2009

Related U.S. Application Data

(63) Continuation of application No. 11/202,688, filed on Aug. 12, 2005, now Pat. No. 7,475,092, which is a continuation-in-part of application No. 11/020,459, filed on Dec. 22, 2004, which is a continuation-in-part of application No. 10/998,691, filed on Nov. 29, 2004, now Pat. No. 7,450,163.

(51) **Int. Cl.**
G06F 17/00 (2006.01)

(52) **U.S. Cl.** **707/791**; 707/802; 707/822; 707/828

(58) **Field of Classification Search** 707/600–831
See application file for complete search history.

(56) **References Cited**

U.S. PATENT DOCUMENTS

2004/0135902	A1 *	7/2004	Steensma	348/231.99
2004/0145602	A1 *	7/2004	Sun et al.	345/720
2005/0036042	A1	2/2005	Haas et al.	
2005/0258246	A1	11/2005	Wolf et al.	
2006/0114337	A1	6/2006	Rothschild	
2006/0114338	A1	6/2006	Rothschild	
2006/0114514	A1	6/2006	Rothschild	
2006/0114516	A1	6/2006	Rothschild	
2006/0176516	A1	8/2006	Rothschild	

* cited by examiner

Primary Examiner — Isaac M Woo

(57) **ABSTRACT**

A method and system for designing and affixing symbology, e.g., an identifier, into digital and printed images and using that symbology to link these images to a global computer network to allow the organization and processing of these images both while in digital form, and later when in printed form are provided. The method includes the steps of capturing an image with a digital image capture device and creating a digital image file; associating at least one identifier to the digital image file; and encoding the at least one identifier of the digital image file. The identifier includes a site location number (SLN), a customer identification number (CIN), a date the image was taken (DIT) and a picture sequence number (PSN). The identifier will be printed with the image and be used to retrieve the image at a later date and process user requests.

11 Claims, 9 Drawing Sheets

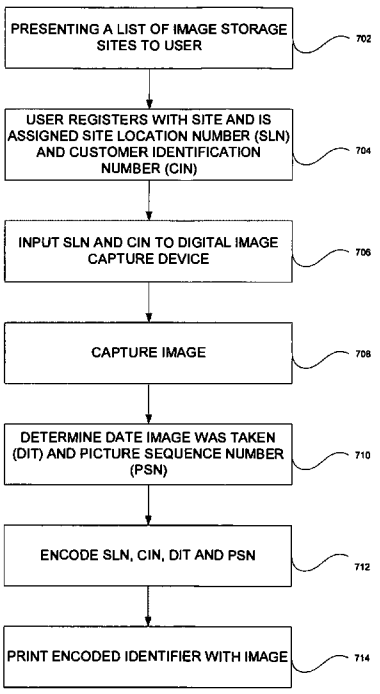

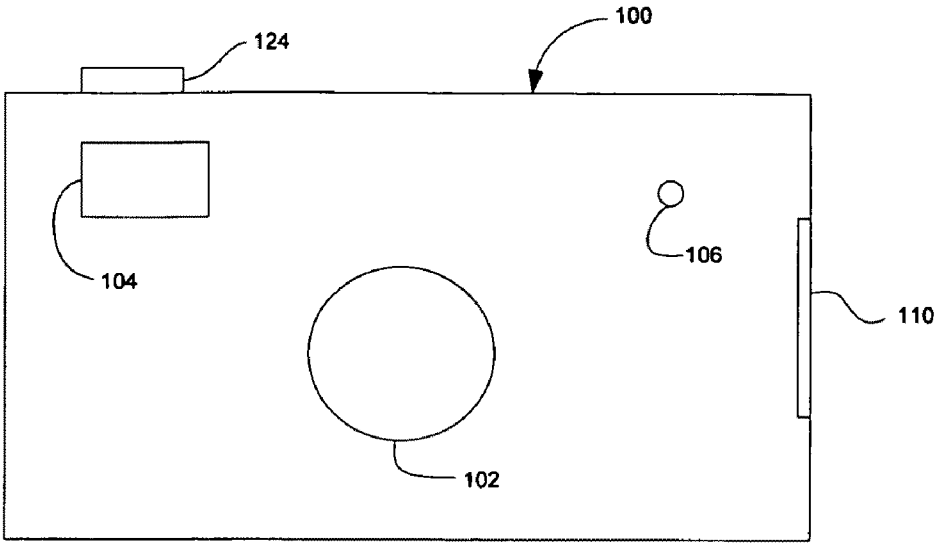

FIG. 1A

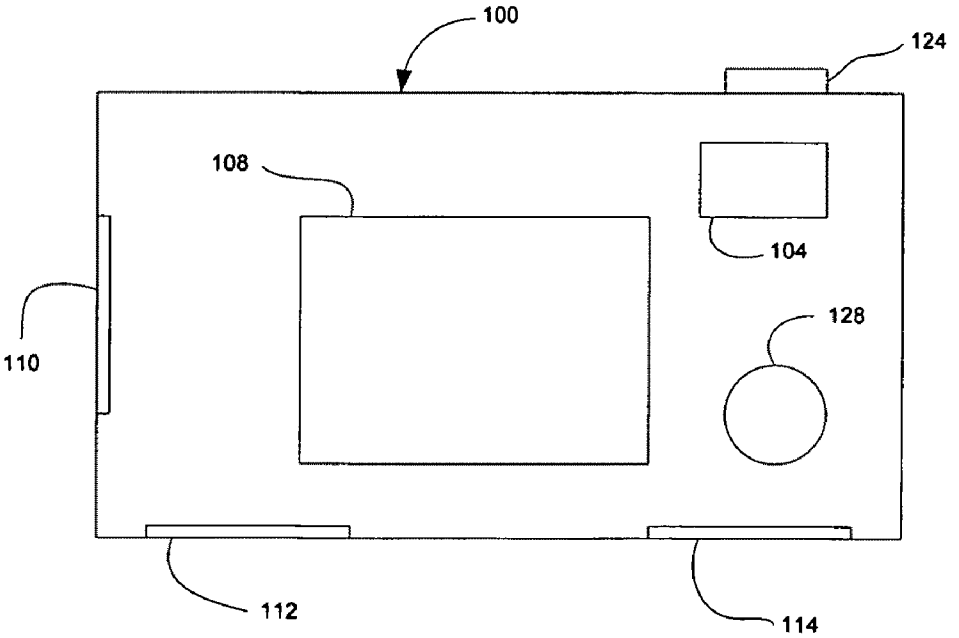

FIG. 1B

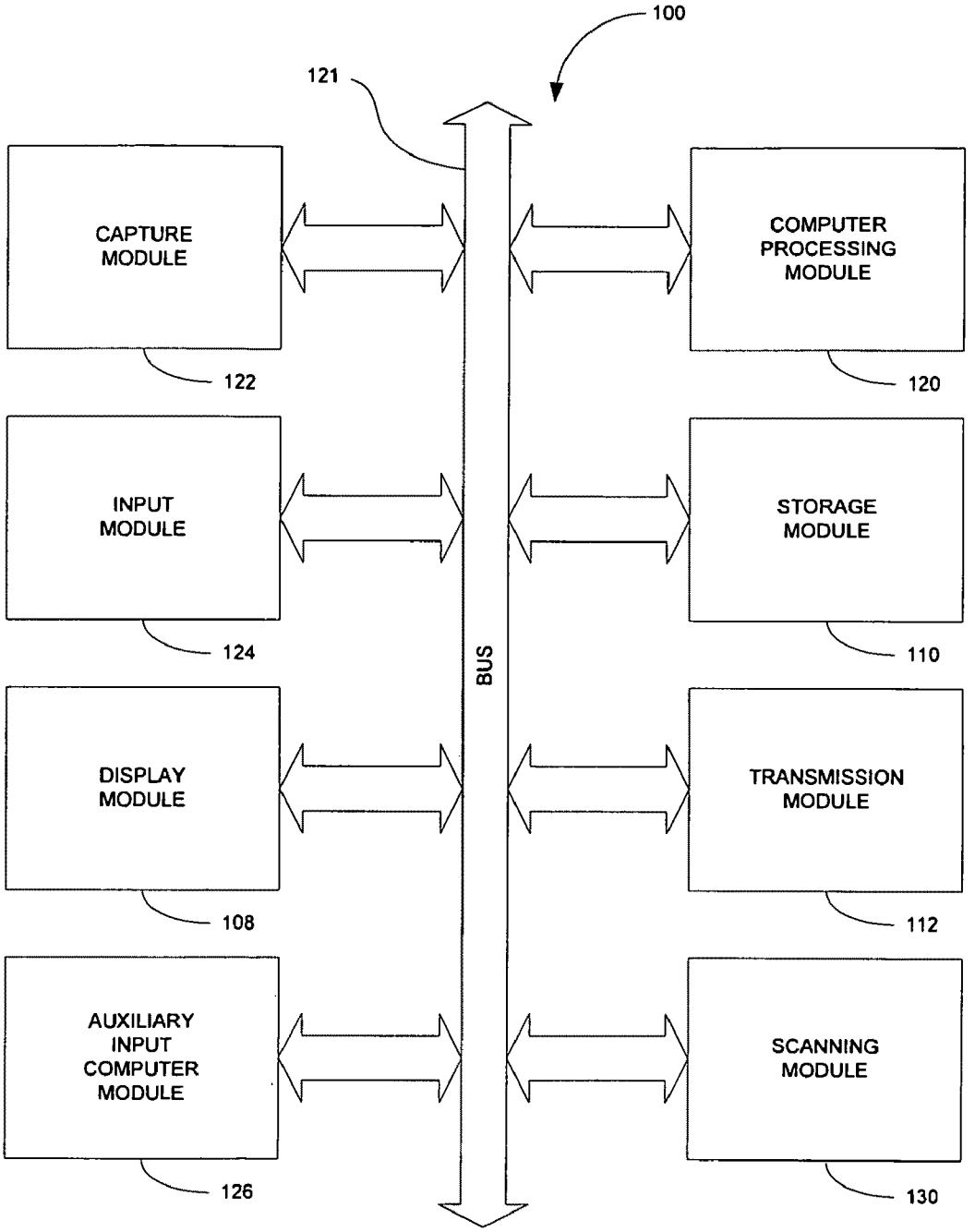
100
121
CAPTURE MODULE
122
INPUT MODULE
124
DISPLAY MODULE
108
AUXILIARY INPUT COMPUTER MODULE
126
BUS
COMPUTER PROCESSING MODULE
120
STORAGE MODULE
110
TRANSMISSION MODULE
112
SCANNING MODULE
130

FIG. 2

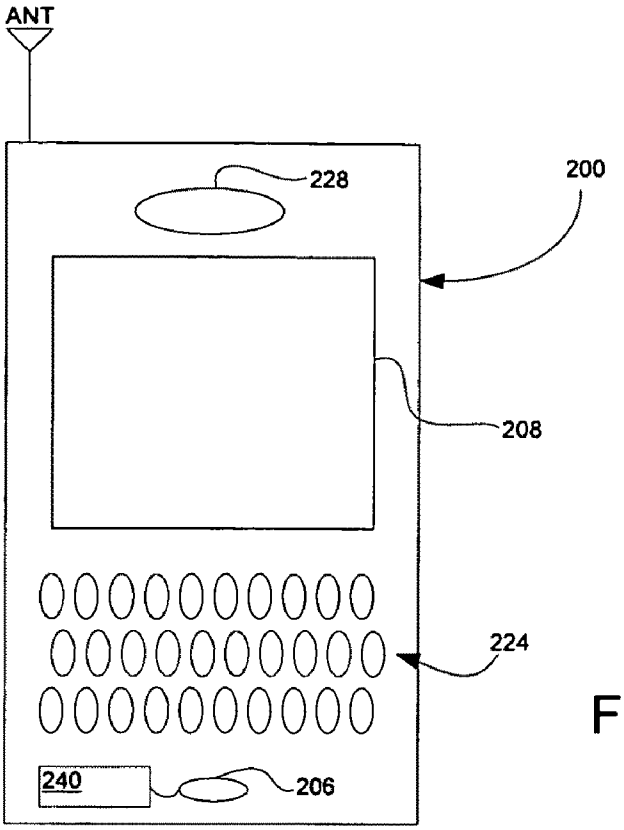

FIG. 3A

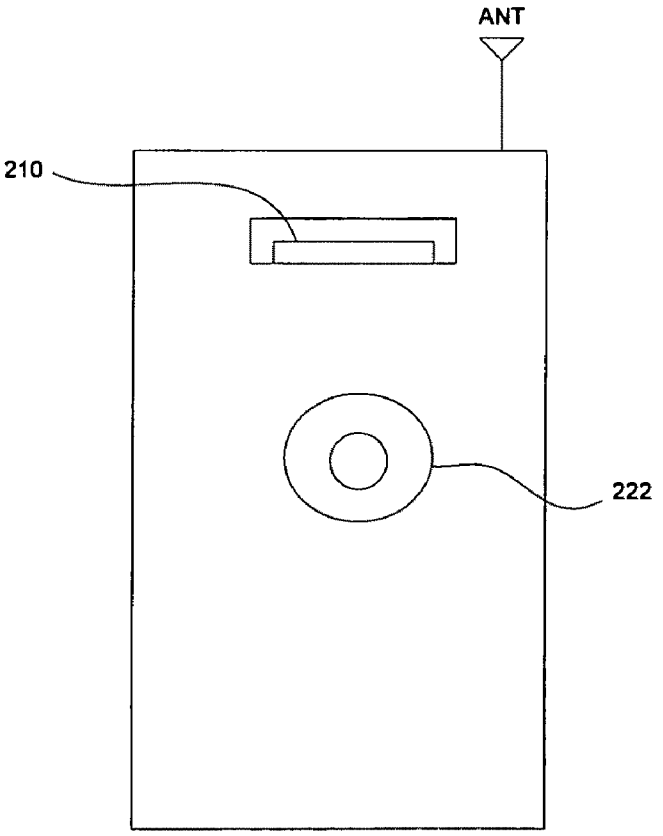

FIG. 3B

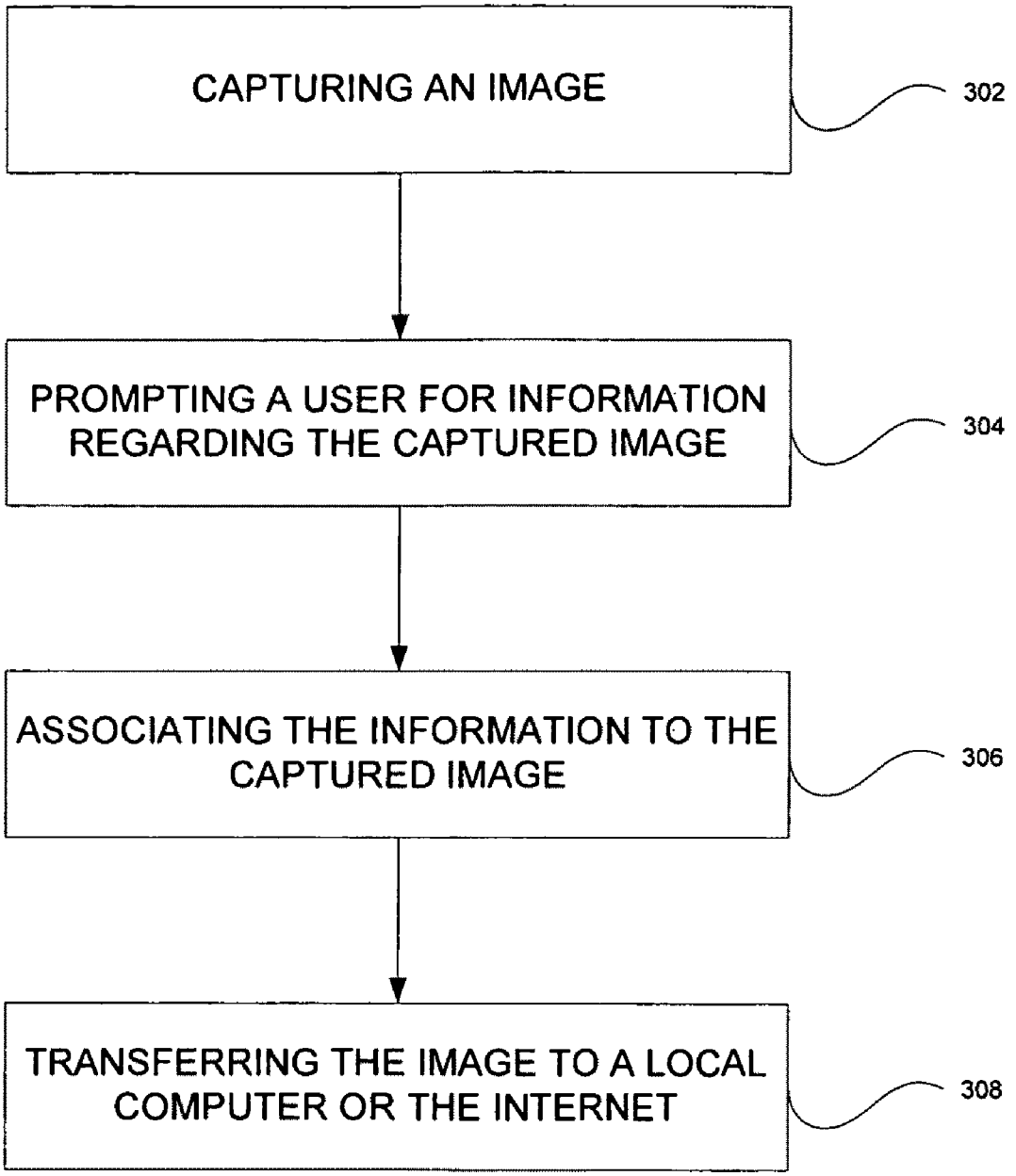
CAPTURING AN IMAGE
302
PROMPTING A USER FOR INFORMATION REGARDING THE CAPTURED IMAGE
304
ASSOCIATING THE INFORMATION TO THE CAPTURED IMAGE
306
TRANSFERRING THE IMAGE TO A LOCAL COMPUTER OR THE INTERNET
308

FIG. 4

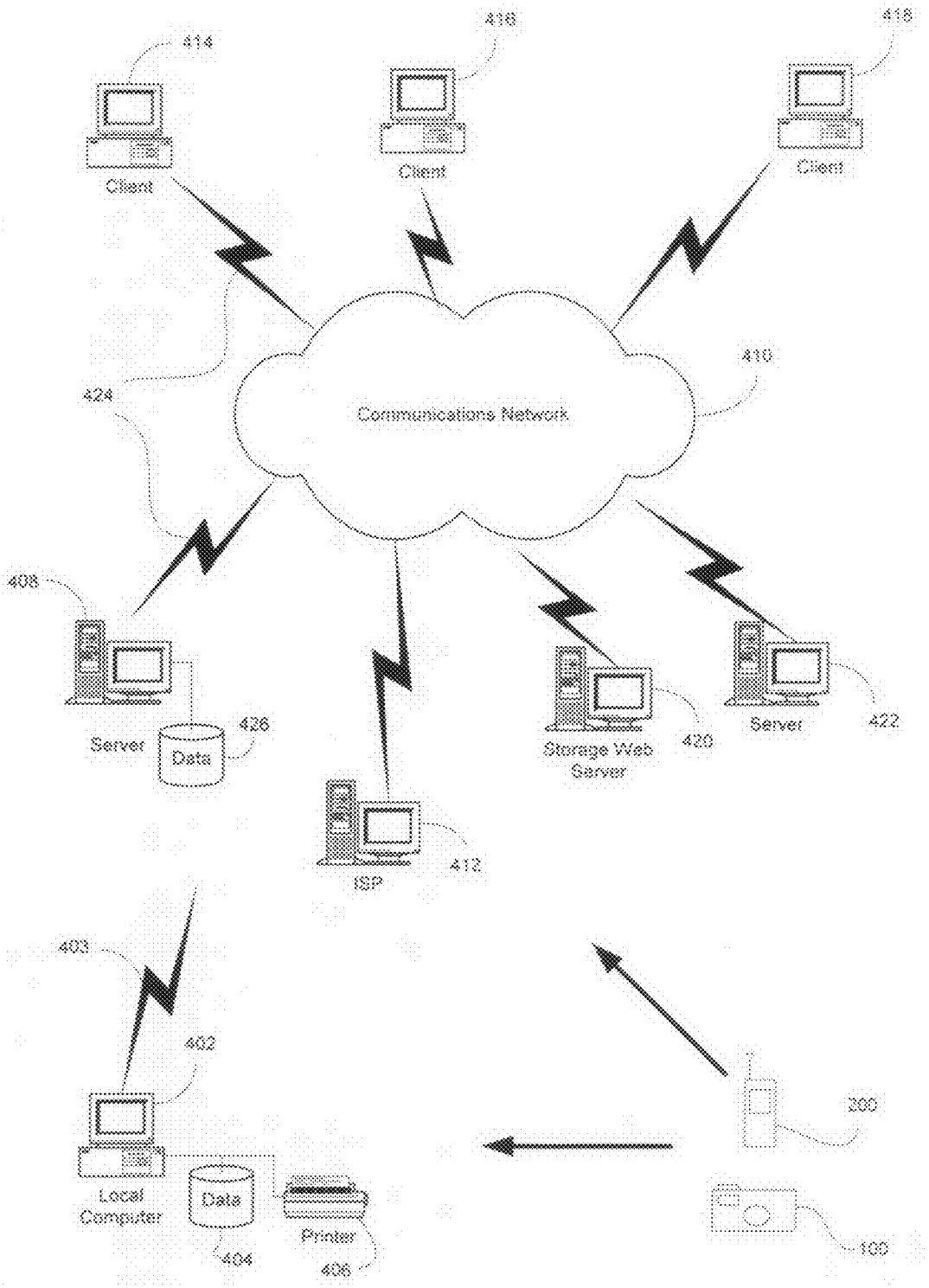
414
416
418
Client
Client
Client
424
410
Communications Network
408
Server
Data
426
Storage Web Server
420
Server
422
ISP
412
403
402
Local Computer
Data
404
Printer
406
300
100

FIG. 5

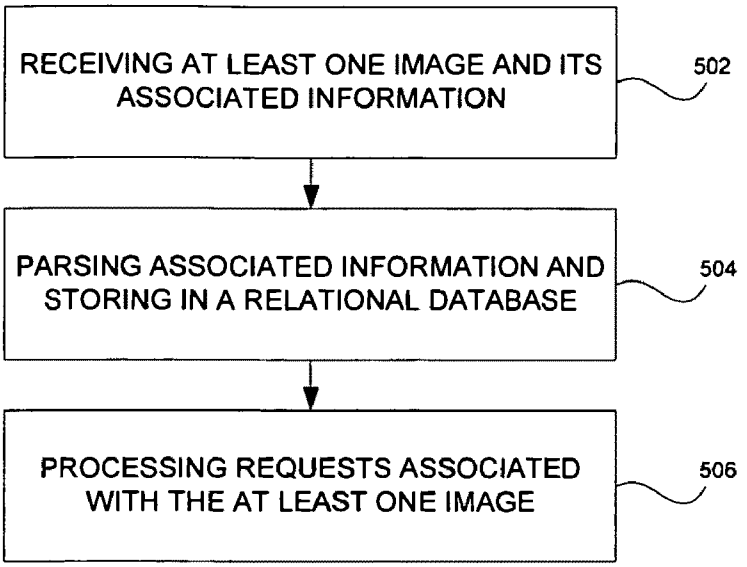
RECEIVING AT LEAST ONE IMAGE AND ITS ASSOCIATED INFORMATION
502
PARSING ASSOCIATED INFORMATION AND STORING IN A RELATIONAL DATABASE
504
PROCESSING REQUESTS ASSOCIATED WITH THE AT LEAST ONE IMAGE
506

FIG. 6A

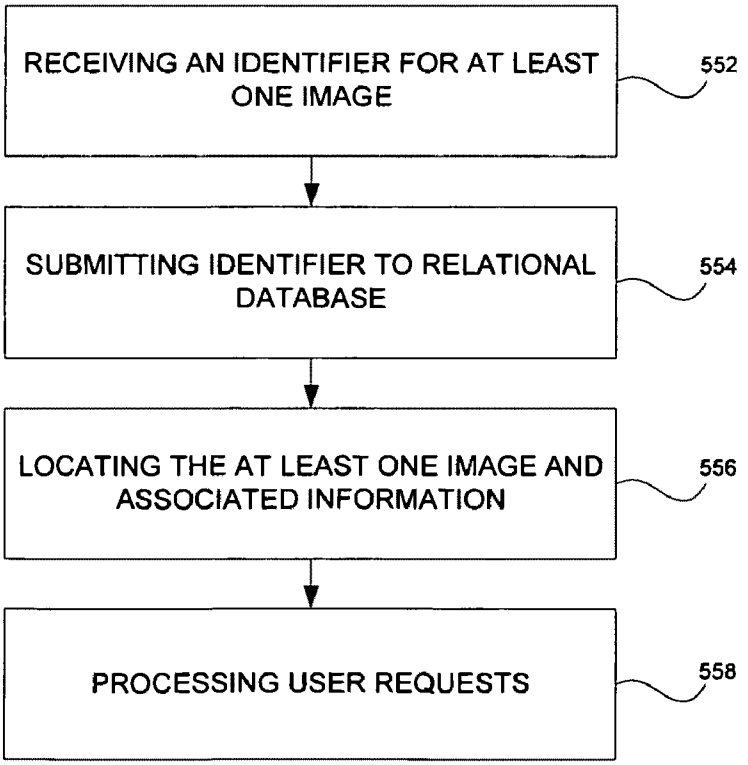
RECEIVING AN IDENTIFIER FOR AT LEAST ONE IMAGE
552
SUBMITTING IDENTIFIER TO RELATIONAL DATABASE
554
LOCATING THE AT LEAST ONE IMAGE AND ASSOCIATED INFORMATION
556
PROCESSING USER REQUESTS
558

FIG. 6B

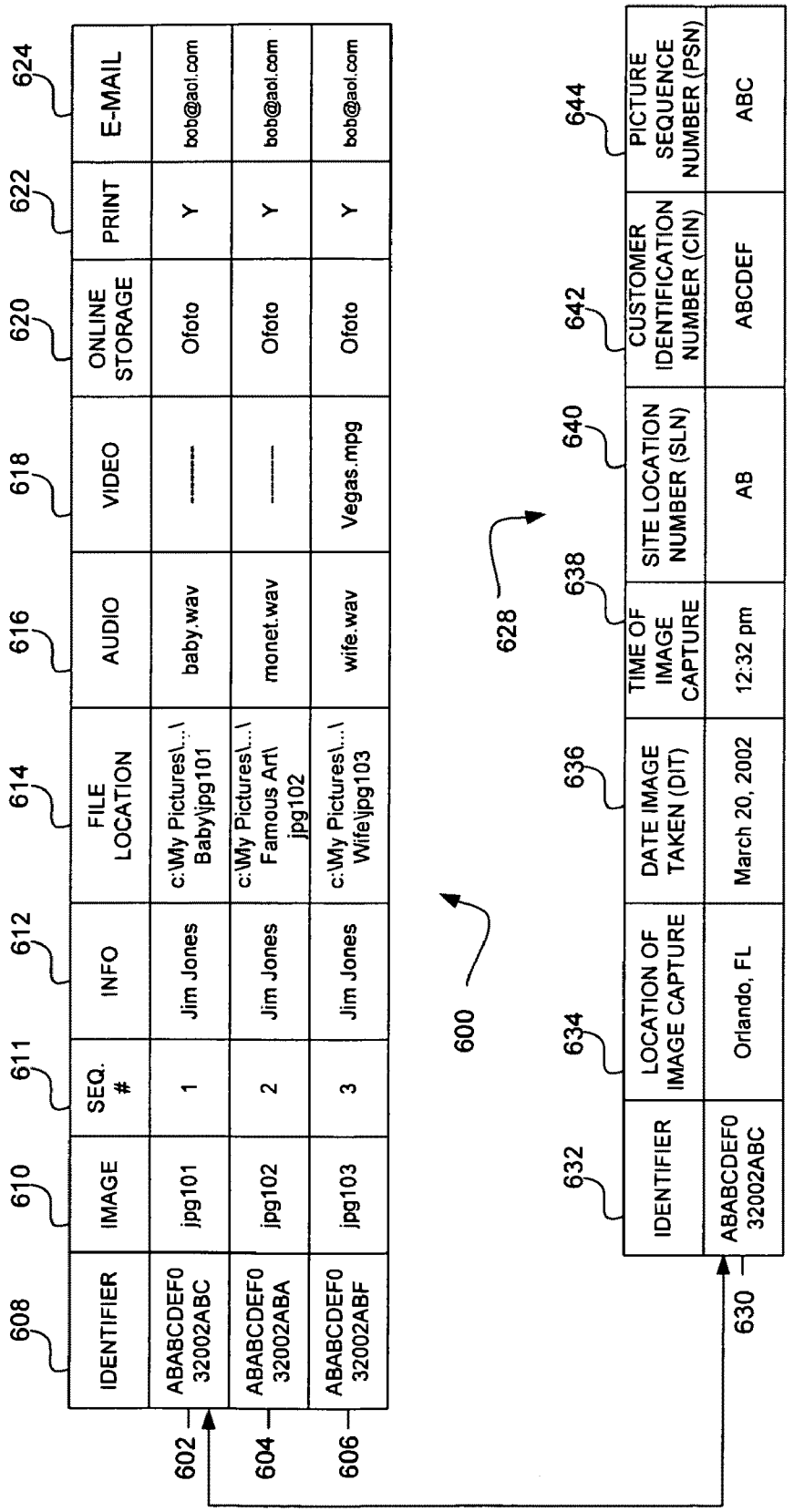
608
IDENTIFIER
610
IMAGE
611
SEQ. #
612
INFO
614
FILE LOCATION
616
AUDIO
618
VIDEO
620
ONLINE STORAGE
622
PRINT
624
E-MAIL
ABABCDEF0 32002ABC
jpg101
1
Jim Jones
c:\My Pictures\...\ Baby\jpg101
baby.wav

Ofoto
Y
bob@aol.com
ABABCDEF0 32002ABA
jpg102
2
Jim Jones
c:\My Pictures\...\ Famous Art\ jpg102
monet.wav

Ofoto
Y
bob@aol.com
ABABCDEF0 32002ABF
jpg103
3
Jim Jones
c:\My Pictures\...\ Wife\jpg103
wife.wav
Vegas.mpg
Ofoto
Y
bob@aol.com
600
602
604
606
628
630
632
IDENTIFIER
ABABCDEF0 32002ABC
634
LOCATION OF IMAGE CAPTURE
Orlando, FL
636
DATE IMAGE TAKEN (DIT)
March 20, 2002
638
TIME OF IMAGE CAPTURE
12:32 pm
640
SITE LOCATION NUMBER (SLN)
AB
642
CUSTOMER IDENTIFICATION NUMBER (CIN)
ABCDEF
644
PICTURE SEQUENCE NUMBER (PSN)
ABC

FIG. 7

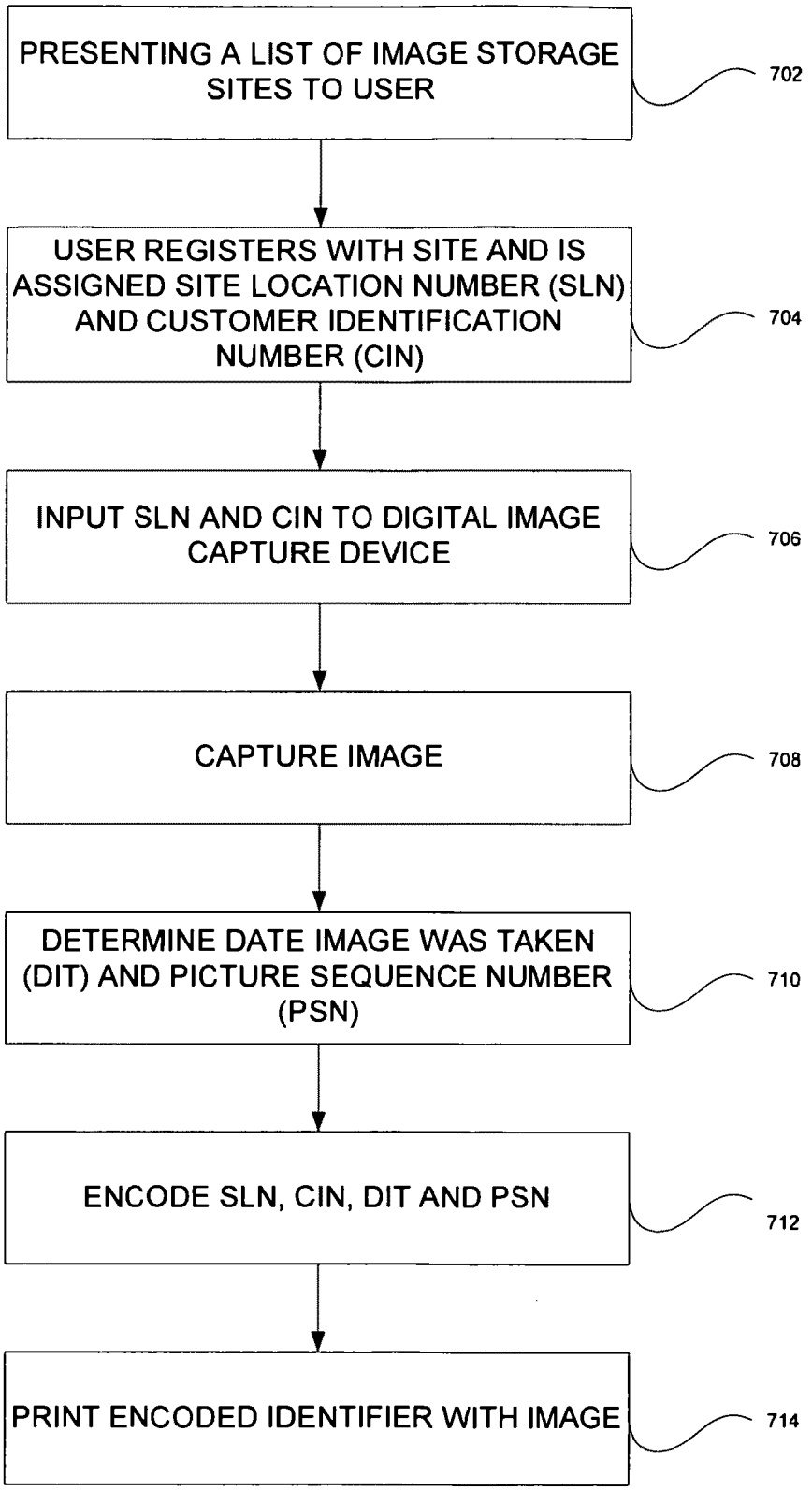
PRESENTING A LIST OF IMAGE STORAGE SITES TO USER
702
USER REGISTERS WITH SITE AND IS ASSIGNED SITE LOCATION NUMBER (SLN) AND CUSTOMER IDENTIFICATION NUMBER (CIN)
704
INPUT SLN AND CIN TO DIGITAL IMAGE CAPTURE DEVICE
706
CAPTURE IMAGE
708
DETERMINE DATE IMAGE WAS TAKEN (DIT) AND PICTURE SEQUENCE NUMBER (PSN)
710
ENCODE SLN, CIN, DIT AND PSN
712
PRINT ENCODED IDENTIFIER WITH IMAGE
714

FIG. 8

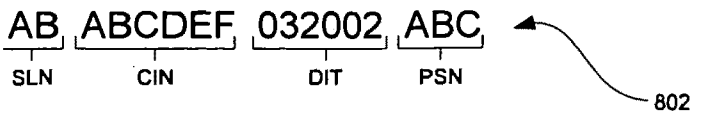

FIG. 9

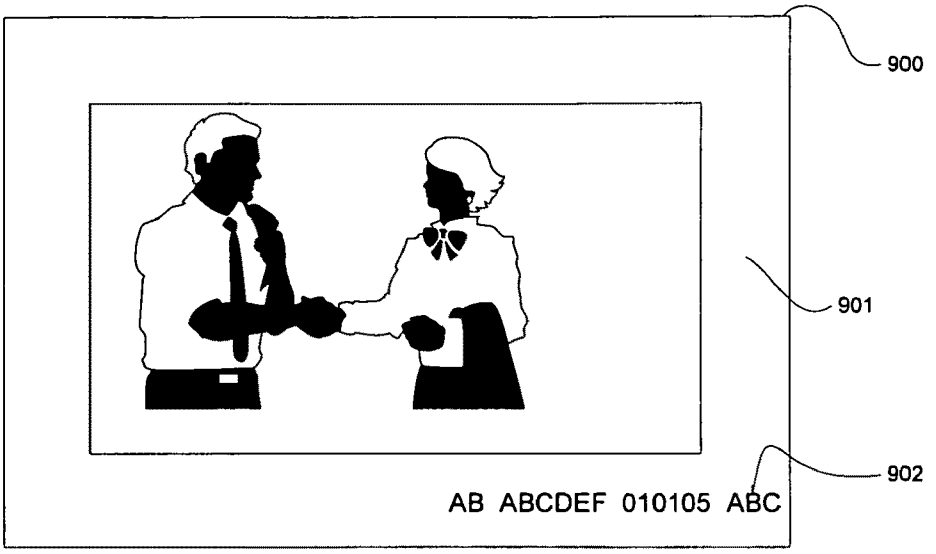

FIG. 10A

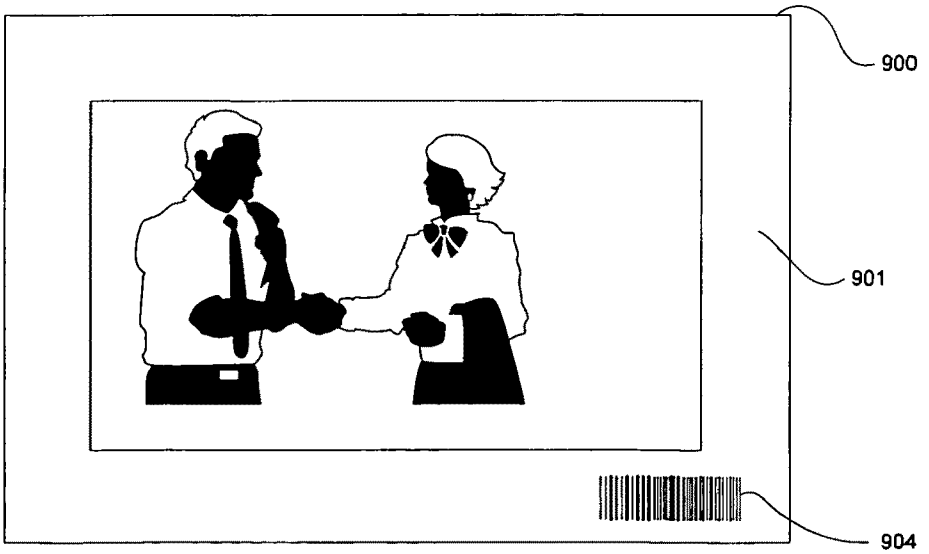

FIG. 10B

SYSTEM AND METHOD FOR EMBEDDING SYMBOLOGY IN DIGITAL IMAGES AND USING THE SYMBOLOGY TO ORGANIZE AND CONTROL THE DIGITAL IMAGES

CROSS REFERENCES TO RELATED APPLICATIONS

The present application is a continuation application of U.S. application Ser. No. 11/202,688, filed Aug. 12, 2005, now U.S. Pat. No. 7,475,092, which is a continuation-in-part application of U.S. application Ser. No. 11/020,459, filed Dec. 22, 2004 entitled "SYSTEM AND METHOD FOR EMBEDDING AND RETRIEVING INFORMATION IN DIGITAL IMAGES", which is a continuation-in-part application of U.S. application Ser. No. 10/998,691, filed Nov. 29, 2004 now U.S. Pat. No. 7,450,163 entitled "DEVICE AND METHOD FOR EMBEDDING AND RETRIEVING INFORMATION IN DIGITAL IMAGES", the contents of all of which are hereby incorporated by reference in their entireties.

BACKGROUND OF THE INVENTION

1. Field of the Invention

The present disclosure relates generally to digital image processing, and more particularly, to systems and methods for embedding and retrieving information in digital images and using the information to organize, process and control the digital images. The present disclosure also relates to a method and system for designing and affixing symbology into digital and printed images and using that symbology to link these images to a global computer network to allow the organization and processing of these images both while in digital form, and later when in printed form.

2. Description of the Related Art

Photographs are taken for a variety of personal and business reasons. During the course of a year, an individual may take numerous photographs of various events. During these events, quite often there are a variety of different individuals and items present in these photographs. In the prior art, when one desires to catalog these images in a particular order, they usually are left to placing these images manually into photograph albums. This is a very extensive, manual procedure requiring a significant amount of time. In addition, it is very limited with regard to the amount of information that can be associated with the image in a quick and easy manner. While some photo albums allow the writing and placing of text, the entering of this data is a very time consuming and arduous affair. Once having sorted these images into particular albums which may represent categories of interest, it is extremely difficult to retrieve and/or reorganize the images into other categories.

With the advent of digital cameras and digital imaging, the process of organizing images and associating information with the images has become even more difficult. Firstly, upon capturing an image with a digital camera, the camera simply gives the image a numerical file name which usually has no meaning to the user and makes it difficult to retrieve the image at a later date. Secondly, with the technological advances in file size compression and increased capacity of storage media, several hundred images may be taken before a user downloads the images to a computer or other device, making it a very time consuming task to associate information to each image.

Therefore, a need exists for techniques for easily associating information about an image to the image and using the

information to control and retrieve the image. A further need exists for encoding the associated information so that the associated information may be unobtrusively presented with the image in printed form and using the encoded information to organize, control and manipulate the image.

SUMMARY OF THE INVENTION

Devices, systems and methods for capturing, storing, allowing user input, receiving internal input, processing, transmitting, scanning, and displaying digital images are provided. Digital photography has gained a substantial share of the worldwide photographic market. More and more cameras record images in digital form and more and more of these images are stored digitally for retrieval or archival purposes on home and business computers and on the Global Computer Network, e.g., the Internet. The present disclosure describes hardware devices, systems and methods that will facilitate embedding information into digital images of any type (e.g., jpeg, bmp, tiff, etc.) to organize, control and manipulate these images both while in digital form, and later when in printed form. Furthermore, the present disclosure describes designing and imbedding symbology or identifiers into digital images of any type (jpeg, bitmap, tiff, gif, etc.) to organize, control and manipulate these images both while in digital form, and later when in printed form.

In one aspect of the present disclosure, as selected digital images are printed by a user, if the user elects, the images will be printed with symbology that is visible in the printed images. This symbology or identifier will then be input to a hardware device by means of a scanner that is part of the hardware device or by means of a standard keyboard interface, or a character recognition capture device which translates user text input into alphanumeric characters. Alternatively, the device may have a voice recognition processor that translates human voice into alphanumeric characters, for user input. Once the hardware device has received and processed the symbology or identifier on the printed images, using standard communications techniques, the scanning/reading device will transmit the image identifier to a computer processor which then may optionally transfer it to the Global Computer Network, e.g., the Internet. The device will then receive information back from the local processor or Global Computer Network relating to the image, for example, the location of the file or files that contain the image, associated attachments, etc. Alternatively, the identifier may be directly entered into a local computing device or a computing device coupled to the Global Computer Network.

According to another aspect of the present disclosure, systems and methods are provided for searching for images based on information associated to the images or an identifier positioned on at least one image.

BRIEF DESCRIPTION OF THE DRAWINGS

The above and other aspects, features, and advantages of the present disclosure will become more apparent in light of the following detailed description when taken in conjunction with the accompanying drawings in which:

FIG. **1**A is front view of a device for capturing digital images and embedding information in the captured images according to an embodiment of the present disclosure;

FIG. **1**B is a rear view of the device illustrated in FIG. **1**A;

FIG. **2** is a block diagram of various modules included in a device for capturing images and embedding information in the images in accordance with the present disclosure;

FIG. **3**A is front view of a device for capturing digital images and embedding information in the captured images according to another embodiment of the present disclosure;

FIG. **3**B is a rear view of the device illustrated in FIG. **3**A;

FIG. **4** is a flowchart illustrating a method for embedding information in a digital image according to an embodiment of the present disclosure;

FIG. **5** is a diagram of an exemplary system for managing a plurality of digital images in accordance with an embodiment of the present disclosure;

FIG. **6**A is a flowchart illustrating a method for receiving at least one image with its associated information and processing requests associated with the at least one image;

FIG. **6**B is a flowchart illustrating a method for retrieving an image and processing user requests;

FIG. **7** is a diagram of at least three records of a relational database employed in accordance with the present disclosure;

FIG. **8** is a flowchart illustrating a method for encoding an identifier for at least one digital image;

FIG. **9** is an exemplary identifier in accordance with the present disclosure;

FIG. **10**A is a view of a printed image including an alphanumeric identifier; and

FIG. **10**B is a view of printed image including a barcode identifier.

DETAILED DESCRIPTION

Preferred embodiments of the present disclosure will be described hereinbelow with reference to the accompanying drawings. In the following description, well-known functions or constructions are not described in detail to avoid obscuring the present disclosure in unnecessary detail. Throughout the figures like reference numerals represent like elements.

Hardware devices, systems and methods thereof that will enable the embedding and retrieving of information in digital images are provided. The embedded information will enable a user to organize, process and control these images. Referring to FIGS. **1**A and **1**B, a device **100** for capturing images and associating information about the captured images is shown. The device **100** includes a lens **102** coupled to a capture module, which will be described in detail below, for capturing an image and a viewfinder **104** for correctly positioning the device when capturing an image. The device **100** further includes a microphone **106** for acquiring audio, from the user of the device or from the subject of the image, which may be associated with the image.

A rear side of the device **100** is illustrated in FIG. **1**B where a display module **108** is provided for displaying the captured image. As will be described in more detail below, the display module **108** may include a touch screen for facilitating user input of information to be associated with a digital image. The device **100** further includes a storage module **110** for storing a plurality of images, a transmission module **112** for transmitting the plurality of images to another device, e.g., a personal computer, a personal digital assistant (PDA), a server residing on the Internet, etc., and a scanning module **114** for scanning and inputting information to be associated with an image and for reading information from printed images.

Referring to FIG. **2**, the various components of the device **100** will now be described. The device will contain a computer processing module **120**, e.g., a microprocessor. The computer processing module **120** will use computer software instructions that have been programmed into the module and conventional computer processing power to interact and organize the traffic flow between the various other modules. It is to be understood that the present disclosure may be implemented in various forms of hardware, software, firmware, special purpose processors, or a combination thereof. A system bus **121** couples the various components shown in FIG. **2** and may be any of several types of bus structures including a memory bus or memory controller, a peripheral bus, and a local bus using any of a variety of bus architectures. The device also includes an operating system and micro instruction code preferably residing in read only memory (ROM). The various processes and functions described herein may either be part of the micro instruction code or part of an application program (or a combination thereof) which is executed via the operating system.

It is to be further understood that because some of the constituent device components and method steps depicted in the accompanying figures may be implemented in software, the actual connections between the device components (or the method steps) may differ depending upon the manner in which the present disclosure is programmed. Given the teachings of the present disclosure provided herein, one of ordinary skill in the related art will be able to contemplate these and similar implementations or configurations of the present disclosure.

Capture module **122** will capture an image desired by the user in digital form. The capture module includes an image sensor, an analog-to-digital (A/D) converter and a digital signal processor (DSP). As the user pushes the device's shutter button **124**, light is allowed to enter through the lens **102** and shine on the image sensor, e.g., a charge-coupled device (CCD) or complimentary metal-oxide semiconductor (CMOS). The image sensor includes preferably millions of photosensors, e.g., pixels, wherein each pixel absorbs the light and transforms the light into an electric charge proportional to the intensity of light. Each charge is transmitted to an A/D converter where the charge is converted into a digital value representing the color the pixel will be, e.g., representing different intensities of red, green and blue. The digital values are then passed to the digital signal processor which enhances the image, compresses it and then stores it in a digital file format in the storage module **110**. The storage module **110** includes internal storage memory, e.g., random access memory (RAM), or removable memory such as a CompactFlash card, Memory Stick, SmartMedia, MultiMediaCard (MMC), SD (Secure Digital) memory, or any other memory storage that exists currently or will exist in the future. The digital file format utilized to store the image is not critical, but may include standard file formats which currently exist or will exist in the future for example jpeg, tiff, bmp, gif, pcx, png or other file formats. If multiple images are captured, the images may be stored in various video formats which currently exist including Divx, Mpeg-2, Mpeg-3, Mpeg-4, Mpeg-5, Quicktime, or other video formats.

The device **100** will also contain a display module **108** for the user to view acquired images. This display may be in any current form in the art, including Liquid Crystal Displays (LCD), Light emitting diode displays (LED), Cathode Ray Tube Displays (CRT) or any other type of display currently existing or existing in the future. The display module **108** will also include an audio output device **128**, e.g., a speaker, headphone jack, etc., allowing the user to also hear audio output from the hardware device. An additional but optional embodiment of the present disclosure may also include video or computer output jacks that will allow the user to hook the subject hardware device to an external television display device or a computer.

The hardware device **100** of the present disclosure will contain a user input module **124** to either receive user instructions via text input by the way of a standard keyboard inter-

face or a character recognition capture device which translates user text input into alphanumeric characters. Preferably, the character recognition device is a touch screen which overlays the display module **108** and text is entered via a pen-like stylus. Such input devices are standard and currently available on many electronic devices including portable digital assistants (PDAs) and cellular telephones. Optionally, a microphone **106** will be coupled to the input module **124** for capturing any audio information spoken by the user and the input module will further include an analog-to-digital (A/D) converter for converting the spoken audio information into digital format. Furthermore, the input module may include a voice recognition processor that translates the digital human voice into alphanumeric characters for user input.

The user will utilize the user input module after an image is captured to enter various data that will either be stored as a file associated with the digital image file or, alternatively, written as an additional part of the digital image file. By example, if the digital image is recorded by the hardware device as jpg**101** or tif**101** or bmp**101** where these descriptions indicate the name of the captured digital image, then another file will be created for each captured digital image. This file would be the information associated file. In the above example, the image jpg**101** would now have an additional file called info**101** (or any other name that the hardware device selects). This digital file would receive and contain the user inputted information. Alternatively, the user input module may write its information directly to the previously stored digital image file. By example, if the digital image is recorded by the hardware device as jpg**101** or tif**101** or bmp**101** where these descriptions indicate the name of the captured digital image, then this file will be appended with the additional information written from the user input module, for example, in the header of the digital image file.

The device **100** will also include an auxiliary input computer module **126**. This module will allow the hardware device to automatically and simultaneously (with image capture) store information in the associated file or alternatively in the same file as the digital image. The information from the auxiliary input module **126** will flow directly from the various input modules and processors contained in the hardware device. These modules and processors may include but are not limited to a processor to determine the individual number of the picture in the sequence of pictures shot that are captured and stored, e.g., a sequence number, a Global Positioning System (GPS) chip to determine the geographic location of where the image was taken, a date chip to determine the date and time the image was taken, a voice capture device to capture comments on the image, and various other input processors that will provide additional information relevant to the digital information, all information which the auxiliary input module **126** will store as information in the info files or directly as addenda in the digital image files. Knowledge of the art, indicates that the individual processors such as GPS, date/time and voice storage, may be separate processors or may also be incorporated as one computer processor.

After the digital image is captured and stored on the device **100**, these files will be transferred to the user's local computer hardware device or to the Global Computer Network, e.g., the Internet, or to the user's local device and then to the Global Computer Network. This transfer will be done by transmission module **112** including hardwired and/or wireless connectivity. The hardwire connection may include but is not limited to hard wire cabling e.g., parallel or serial cables, USB cable, Firewire (1394 connectivity) cables, and the appropriate port. The wireless connection will operate under any of the various known wireless protocols including but not limited to Bluetooth™ interconnectivity, infrared connectivity, radio transmission connectivity including computer digital signal broadcasting and reception commonly referred to as Wi-Fi or 80211.X (where x denotes the type of transmission), or any other type of communication protocols or systems currently existing or to be developed for wirelessly transmitting data. Furthermore, the transmission module **112** may include a removable memory card slot for accepting any of the various known removable memory cards, transferring the image files to the removable card, and subsequently the images may be uploaded to a computer from the removable memory card by an appropriate reader coupled to the user's computer. The file name of each digital image file and/or associated file will be recorded in a relational database either on the user's local computer or the Global computer network, as will be described in detail below. This database will contain information on any file(s) related to each digital image including audio and video files, or other associated image files.

The user, or any other party, may print out any of the digital images described herein. The printing will be done once the images are stored on the local computer or the Global Computer Network and recorded in a relational database. When the images are printed out, the computer that prints the image will cause the image to be printed with symbology that encodes that file name of the image and file location of the image, or any other coding that will provide access to the file name and file location. This file name may be the assigned name that the image was stored in at the relational database, as well as the assigned location of the relational database whether in the user's local computer or at a stored location on the Global Computer Network. The symbology may be in any form currently practiced in the art including barcodes (e.g., UPC, EAN, PDF417, etc.), photosymbols, standard or specialized text, etc., or any future type of symbology. Of course, as stated, any symbology utilized will represent or lead to the file names and file locations of the digital images.

The device **100** will further include an integrated scanning module **130** that will contain a light source, e.g., LED, and photocell coupled to the computer processing module **120**, or alternatively, will includes a separate decoder engine that will decode the data received by the photocell before sending it to the computer processing module **120**. Knowledge of the art reveals that many different types of scanners currently exist and the inventor realizes that the type of scanner would depend upon the type of symbology that is utilized in the printed images. The user will be able to scan the printed digital images with the device **100** and the scanning module **130** would scan in the symbology. Using standard computer programming and the computer processing module, the device would translate the symbology to extract the name of the digital image and the file locations (whether local or on the Global Computer Network) of the digital image. Alternatively, the scanner may extract some type of marker or symbol, e.g., an identifier, that when presented to the relational database would indicate the file name and file location of the digital images. This information would then be transferred to the transmission module which will transmit it to the local or Global Computer Network which will then submit it to the relational database containing information on the digital images. Using standard computer programming and processing, this database would then locate the stored digital image and associated files/information and also process the users request(s) regarding the digital image.

If the subject hardware device is coupled to a computer via the transmission module **112**, then the hardware device **100** will receive back and display the processed requests on the display module **108**. By example, a user may scan in a printed

digital image with the hardware device **100** and then receive that image for display on his device, along with auxiliary information on the image, and along with auxiliary and associated audio and video files that can be displayed on the hardware device via the display module **108**.

Referring to FIGS. **3**A and **3**B, another embodiment of the present disclosure is illustrated. Here, a device **200** according to the principles of the present disclosure is embodied as a mobile phone including the modules and architecture illustrated in FIG. **2**. Device **200** includes a microphone **206** having the same functionality as microphone **106** and is further coupled to a communication module **240** for encoding a user's speech to be transmitted via antenna ANT using CDMA, PCS, GSM or any other known wireless communication technology. Device **200** further includes display module **208** for displaying captured images and preferably the display module will have a touch screen overlaid upon it which will enable user input via a stylus. The user may also enter phone numbers to be dialed via the touch screen. As is known in the mobile phone art, device **200** may include a full QWERTY keyboard **224** as an input module to enter text information to be associated to captured images. Earpiece or speaker **228** may be utilized to play audio clips associated with images in addition to being coupled to the antenna ANT and a decoder for receiving and decoding voice communication from another mobile phone.

Preferably, the antenna ANT is coupled to a transmission module similar to the one described above in relation to FIG. **2**. The transmission module will compress and encode captured images for transmission using any known wireless communication technology. Transmitting images via wireless technology will facilitate the transferring of images to an online photo storage site or to an online photo developing service provider.

Referring to FIG. **3**B, a rear side of device **200** is shown. Capture module **222** is employed for capturing images and when disposed on a rear side of device **200** is used in conjunction with display module **208** for positioning a subject of the image in lieu of a viewfinder. In this embodiment, the capture module **222** may also be used in conjunction with the scanning module to read symbology associated with an image. Here, the capture module will acquire an image of the symbology and the scanning module will further include a digital signal processor executing an algorithm for deciphering or decoding the symbology from the capture image. The use of an image sensor to read symbology, e.g., a barcode, is known in the art and systems employing such technology is commercially available from Symbol Technologies of New York.

Similar to the embodiments described in relation to FIGS. **1** and **2**, device **200** includes a storage module **210** for storing images via a removable memory card.

In utilizing the hardware device described herein, the user will be able to accomplish the various applications of the disclosure which are described below in relation to FIG. **4**.

A user takes several pictures with his imaging device (step **302**). In one example, the picture is of a baby in Las Vegas. The next picture is of a Monet painting hanging in a gallery in Las Vegas. Another picture is of the user's wife. At end of taking pictures or, alternatively, immediately after taking each individual picture, the user goes back to the device **100**, **200** and using either keystroke input via input module **124** or voice recognition software via a microphone, or any other input means, the user enters information regarding the pictures. The user may be prompted, e.g., either via the display module or by spoken word via the speaker, to provide the following information regarding the pictures, i.e., the images taken (step **304**):

(1) The file location to store the photos or images once they are transferred to permanent memory storage, e.g., a local computer or a server residing on the Internet. For the first picture the user indicates that he would like the photo stored under his baby picture file, e.g., a folder on his local computer, for the second picture his famous art file, and for third picture his file with pictures of his wife.

(2) The user is then asked via the speaker, or prompted on the display module **108**, **208**, if he wants to attach any audio or video to the images to stay associated with the images once they are stored. He indicates that for the first image he wishes to record an audio file indicating: "This is a picture of my baby girl Samantha here in Las Vegas. Boy is she cute"; for the second image: "Loved this Monet and had previously seen it in at the Louvre last year"; and for the third image: "Jenny is wearing the new dress that I just bought her"; also for number three picture please attach the video file entitled Jenny's day in Las Vegas to this picture.

(3) The user now is asked to enter, via text input or voice recognition or any other input means, whether they will be storing these photos online. The answer would be either Yes or No. If the user answers Yes, a predetermined site could have been selected and pre-stored in the camera hardware device (for instance, the Ofoto or Imagestation site) and selected photos would automatically go to that location for upload when the digital images are transferred.

The hardware device retrieves (from input that it receives from the auxiliary input computer module **126**) the time and location of the images. The hardware device also knows (from memory that was pre-stored in the hardware) the name and identification information on the owner of the hardware device or any guest using the device. Moreover, the hardware device will also store the number of the digital image by recording the order that the image was taken in, e.g., the sequence number. The user can also flag (i.e., select) any images that he would like to have printed or e-mailed.

The various information is then compiled and either stored as a separate information file associated to the image or appended to the digital image file and stored for example in the header of the image file (step **306**).

The user will now transfer the images to his local computer workstation which may or may not be connected to the Global Computer Network via transmission module **112** (step **308**). When the computer receives these imbedded 'smart pix' images, the computer will:

a. Sort and file the images in the file or folder selected including storing the files with the associated information and audio and video attachments;

b. Perform any actions requested for the photos including, e-mail the photos to a selected user or users and print the photos on designated printers in a size pre-selected; and

c. With a connection to the Global Computer Network, automatically upload the photos and associated attached files to the specified server site (Ofoto, or Smartpix, for instance) for storage and retrieval.

Once the images are printed, the user will be enabled, regardless of the time elapsed since the images were taken, to take a hardware device (possibly the camera device that the user utilized to take the images, or another hardware reader device) and scan it over a photo. The device will read the symbology in the images and using standard communications techniques including Wi-Fi, Bluetooth, infrared, cabling, etc.,

the scanning/reading device will transmit the photo identifier information to a computer processor which then may optionally transfer it to the Global Computer Network. The device will then receive the information back from the local processor or Global Computer Network and will then locate the file or files that contain the image and associated attachments on the local or Global Computer Network.

By example, the user holds the scanning device over images of a child on the beach and an audio track then comes back: "Daddy I love this beach and I love you". The user would also be able to instantly receive information on the photo such as when and where the photo was taken and who the photographer was. The user could also request that the photo be printed to a local printer in a specific size or that the picture be e-mailed to a selected recipient. Other user requests could include asking the local computer to display all associated photos, file attachments, or to store the photo in a selected location on the local computer or the Global Computer Network.

Referring to FIG. **5**, an exemplary system for managing a plurality of digital images in accordance with an embodiment of the present disclosure is illustrated. Digital imaging device **100**, **200** will transfer the digital images to a user's local computer **402** or to an online imaging web server **408**, e.g., Ofoto, where the plurality of images will be processed and manipulated as will be described below. The user's local computer **402** may connect to communications network **410**, e.g., the Internet, by any known means, for example, a hardwired or wireless connection **403**. It is to be appreciated that the network **410** may be a local area network (LAN), wide area network (WAN), the Internet or any known network that couples a plurality of computers to enable various modes of communication via network messages. It is to be understood that the present disclosure may be implemented in various forms of hardware, software, firmware, special purpose processors, or a combination thereof. In one embodiment, the present disclosure may be implemented in software as an application program tangibly embodied on a program storage device. The application program may be uploaded to, and executed by, local computer **402** or web server **408**. The local computer **402** and web server **408** will include an operating system and micro instruction code. The various processes and functions described herein may either be part of the micro instruction code or part of the application program (or a combination thereof) which is executed via the operating system. In addition, various other peripheral devices may be connected to the computer platform, e.g., the local computer **402** and web server **408**, by various interfaces and bus structures, such as a parallel port, serial port or universal serial bus (USB), for example, additional storage devices **404**, **426** and a printer **406**.

Alternatively, the user's local computer **402** may connect to the network **410** via an Internet Service Provider (ISP) **412**, where once connected, the ISP server **412** will manage the flow of the digital images, e.g., e-mailing the images to other users **414**, **416**, **418** of the network **410**, transmitting the images to online storage web servers **420**, and/or manage the flow of information from various web sites connected to the network **410**, e.g., content providers residing on servers **422**. Furthermore, the ISP **412** will include a mail server for handling electronic mail, e.g., e-mail. The mail server will include the appropriate applications and/or servers for handling incoming mail, e.g., Simple Mail Transfer Protocol (SMTP), and outgoing mail, e.g., Post Office Protocol 3 (POP3).

Although the physical environment in FIG. **5** shows the connected devices as computers, such illustration is merely exemplary and may comprise various digital devices, such as PDAs, network appliances, notebook computers, etc. The computing devices may communicate to the servers **408**, **412**, **420**, **422** and network **410** via any known communication link **424**, for example, dial-up, hardwired, cable, DSL, satellite, cellular, PCS, wireless transmission (e.g., 802.11a/b/g), etc. Furthermore, the devices will communicate using the various known protocols such as Transmission Control Protocol/Internet Protocol (TCP/IP), File Transfer Protocol (FTP), Hypertext Transfer Protocol (HTTP), etc.

FIGS. **6**A and **6**B are flowcharts illustrating methods being executed by programmable instructions either at the local computer **402** or the imaging web server **408**. Although the following description will be described in relationship to methods being implemented by software on the local computer **402**, the methods can be implemented at web server **408** after the images are transferred to the web server **408** via the Internet.

Referring to FIG. **6**A, once information is associated to at least one digital image, the image and associated information is transferred from device **100**, **200** and received by local computer **402** (step **502**). The local computer **402** will parse the associated information and store each piece of data as a separate field in a single record in a relational database (step **504**). An exemplary database **600** is shown in FIG. **7**. The database **600** includes a record **602**, **604**, **606** for each image and further includes a plurality of fields for each record. For example, record **602** includes an identifier field **608** for storing any alphanumeric identifier associated with the digital image, an image field **610** including the file name of the image, a sequence number field **611** for storing an image sequence number, an info field **612** which may include user/owner information (e.g., author, photographer, publisher), subject matter information, an image description, a keyword associated to the image, etc., and a file location field **614** for storing the location where the image file is stored. Record **602** also includes an audio field **616** for storing the file name of an associated audio file and a video field **618** for storing the file name of an associated video file. Record **602** further includes request fields, e.g., online storage request field **620**, print request field **622** and e-mail request field **624**, which will cause the local computer to process and take further action with regard to the image transferred, which will be described in more detail below.

Next, in step **506**, the local computer **402** will use relational database programming, e.g., Structured Query Language (SLQ), and standard computer processing power to respond to any user requests for each of the digital images. These requests include but are not limited to displaying the digital images in a particular sequence, or sorting the digital images by owner, date, location, description, etc. The local computer **402** will query each record of the relational database to determine if an action has been requested. For example, the local computer will query e-mail request field **624** to determine if the image is to be e-mailed to another. As shown in FIG. **7**, e-mailing the digital images to a person has been indicated by the user, with such person's e-mail address being stored in the relational database, e.g., bob@aol.com. As another example, the local computer **402** will query print request field **622** to determine if the user has flagged the image to be printed upon transfer. The record may include further information regarding printing the image such as a printer location (either local or on the Global Computer Network) and in a size or format that has been requested by the user. As an even further example, the local computer **402** may query online storage request field **620** to determine if the user wants to store the image on a public server for viewing purposes. The field **620**

may include the name or location of a professional photo processing location on the Internet, such as ImageStation or Ofoto. Although not shown, each record may include other request fields, for example, fields for requesting the display of information on any selected digital image, such information being contained in the relational database, or the display of related audio or video or image files. The inventor understands and current computer database and computer processing techniques teach, that various other requests to the computer processor regarding the digital images and associated files/information may be made by the user, and by using standard programming and computer processing power these requests will be completed by the computer and presented to the user.

The user, or any other party, may print out any of the digital images. The printing will be done once the images are stored on the local computer **402** or a web server **408** on the Global Computer Network and recorded in the relational database **600** as described above. When the images are printed out, the computer that prints the image will cause the image to be printed with symbology that encodes the file name of the image and file location of the image. This file name will be the assigned name that the image was stored in at the relational database, as well as the assigned location of the relational database whether in the user's local computer or at a stored location on the Global Computer Network. Alternatively, the symbology will represent a unique identifier that is created for each image as stored in field **608** of each record in the database. The symbology may be in any form currently practiced in the art including barcodes, photosymbols, standard or specialized text, etc, or any future type of symbology. Of course, any symbology utilized will represent the file names and file locations of the digital images either directly or via an identifier.

At any time, a user may now scan the printed digital images. This scanning may be done by any type of scanner that could read the symbology contained in the printed digital images. Many different types of scanners that read symbology currently exist and the inventor realizes that the type of scanner would depend upon the type of symbology that is utilized in the printed images. Preferably, the scanning of a printed digital image will be performed by the hardware devices **100**, **200** described above including the appropriate scanning module.

The device **100**, **200** would scan in the symbology and using standard computer programming and computer processing, translate the symbology to extract the name of the digital image and the file locations (whether local or on the Global Computer Network) of the digital image, or alternatively, the identifier of the record relating to the image. This information is then transmitted to the user's local computer along with a user request. In another embodiment, this information would be submitted to the location of the computer indicated in the symbology and, at that location, this query would be submitted to the relational database containing information on the digital images.

The local computer **402** will receive the file name and location or image identifier for at least one image in step **552**. Using standard computer programming and processing, the identifier will be submitted to the database (step **554**) and the database would then locate the stored digital image and associated files and/or information via its corresponding record (step **556**). Once the record is found, the computer will process any user request(s) (step **558**) regarding the digital image that was either transferred with the identifier or after the identifier located the appropriate record. Such requests could include but would not be limited to displaying the digital images in a particular sequence at the local computer or on the imaging device **100**, **200**; e-mailing the digital image to a person that has been indicated by the user, with such person's e-mail address being stored in the relational database; and printing the digital images at a printer location (either local or on the global computer network) and in a size or format that has been requested by the user. Furthermore, a request may include a request for displaying information on any selected digital image, such information being contained in the relational database, for example, displaying audio or video or image files that are related to the selected digital image. Depending on the request, the image and associated information may be displayed or presented to the user at the local computer **402** or the image and associated information may be transmitted to the imaging device **100**, **200** for presentation to the user.

By example, the user holds a scanning device, e.g., imaging device **100**, mobile phone **200**, etc., over an image of a child on the beach processed via the system and method of the present disclosure. An audio track then comes back: "Daddy I love this beach and I love you" audibly produced via speaker **128**, **228** on the device **100**, **200** respectively, or alternatively, the image and audio track are presented to the user if they are at the local computer **402**. The user would also be able to instantly receive information on the photo such as when and where the photo was taken and who the photographer was. The user could also request that the photo be printed to a local printer in a specific size or that the picture be e-mailed to a selected recipient. These further requests could be entered either via a keyboard/mouse at the local computer **402** or via input module/speech recognition at the device **100**, **200**. Other user requests could include requesting the computer to display all associated photos, file attachments, or to store the photo in a selected location on the local computer or the Global Computer Network.

It is to be appreciated that the software utilized to implement the above methods could reside at server **408** with relational database **600** residing in storage medium **426**. Here, the user may employ local computer **402** to transfer the digital images and requests to server **408**. In this embodiment, a user could access any of the plurality of images and associated information from any location in the world having access to the Internet. Furthermore, the use of a mobile communication device such as device **200** described above would facilitate the transferring of images and requests to the server **408** by way of a wireless connection either directly to the server **408** or via ISP **412** to the server **408**.

Once the digital images are resident on the user's local computer or on the Global Computer Network, the user may utilize a user interface to search for any of the stored images. The user interface may include voice recognition software (VRS), keyboard input (KI) or any other user interface currently existing or that will exist in the future to submit a search query term to the computer to search for a digital image or images. The computer will utilize a search software module (SSM) that may include relational database software, a browser plug-in, etc. to submit a search query to the database including the images and associated information as described above. This search software module (SSM) will be directed by the VRS, KI or any other user input device to the location or site on the local computer or Global Computer Network where the digital images reside. The SSM will then submit the query for comparison to the various information data fields that are contained in the digital image file or associated file (e.g. such as date field **636**, name field **610**, time field **638**, sequence number field **644**, location field **634**, author/publisher field **612**, subject matter category field **612**, keyword

field **612**, etc), and, using standard computer processing power, will select the digital image or images that contain the submitted query. The selected digital images will be then displayed on the local computers display device **402**. Depending on the user's specific request, the user is able to instruct the computer to display and/or sort the digital images by various sort criteria including but not limited to: date the digital image was taken; name of the image; time the image was taken; sequence number of the image; geographic location that the digital image was taken at; author and/or publisher of the image; subject matter of the image; keyword for the image; and any other sorting variable that the user selects.

It is to be appreciated that the SSM has the ability to submit multiple queries to the processor and as such to set multiple search criteria for selecting the desired digital image(s). By example, a user could ask the SSM to select an image or images for display that were taken at a certain time and at a certain location, and by a certain author/photographer.

Once the selected digital image or images are displayed, the user will also be able to additionally process these images. The user will be able to e-mail any image or images to any other party using standard e-mail software which currently exists by communication through the Global Computer Network, e.g. the Internet. The user will also be able to print out any image again using standard printer software which also currently exists in many formats. Printing software will allow the user to print the image to a local printer or using the Global Computer Network to print the image to a selected printer connected to the Global Computer Network. The user will be able to purchase any digital image or images by using standard e-commerce software which also currently exists in many forms. The user will also be able to playback associated music or video files or display other associated still images. Furthermore, the user will click on the subject digital image and the image will tell the user the location or location of the associated files. The user will then be taken to this location by standard hyperlink technology. Once the user has located the associated file or files, the user will use standard software playback software such as Itunes™, Real Video, Microsoft™ Media Player, Kodak™ Photo Viewer, or other software, to play and display the selected file(s) on the user's local computer display.

Additionally, the user will be able to resize any selected digital image. The user will select the image and the image will be submitted to standard digital image software which is commonly available. This software will resize the selected image and display it on the user's local computer display. The user will also be able to invite other users on the Global Computer Network to simultaneously share or view the selected digital image(s). The selected digital image will be presented to standard Instant Messaging software such as AOL™ Instant Messenger or Microsoft™ Instant Messenger, and using the Global Computer Network, other parties will be notified and be able to view the selected image.

A user will also be able to perform the above tasks when viewing digital images on the Global Computer Network providing that the images are "smart pix" images and encoded as disclosed herein. For example, a user browsing web sites on the Global Computer Network comes across a digital image that he is interested in. The User mouse clicks or otherwise selects the entire image or a particular marked and identified spot on the image, e.g., a hot spot. In one embodiment, the hot spot in the digital image will be marked with some kind of indication that indicates that this is the location containing the hot spot. In other embodiments, the hot spot may be the identifier or symbology displayed on or with the image. When the user communicates with the computer via keyboard input, mouse input, voice recognition, etc. and identifies the hotspot for the digital image, a link contained within the digital image will come up and that will link the user to the associated file or alternatively to the digital file contained within the digital image. The user will then be able to receive information on the digital image that they are viewing on their local computer display including but not limited to: date the digital image was taken; name of the image; time the digital image was taken; sequence number of the image; geographic location that the digital image was taken at; author and/or publisher of the image; subject matter of the image; keyword for the image; and any other sorting variable that the user selects. Additionally, the user would be able to instruct the computer to process any individual image or a multiple of images and perform the requests identified above, such as: e-mail the digital image to any other person through the Global Computer Network using standard Internet e-mail protocols such as AOL™ mail, Microsoft™ Outlook, Microsoft™ Express; purchase the digital image through an e-commerce site on the Global Computer Network; resize the image on the computer display device to the user's specifications using standard computer software for digital images such as Kodak™ Digital Imaging Software, Microsoft™ Digital Imaging software, etc.; request that associated audio or video or digital image files be played and/or displayed using the computers audio/video/digital image software including Itunes™ for music, Microsoft™ Media Player for music or video, RealPlayer™ for music or video, Kodak™ or Microsoft™ Digital Imaging software for Pictures; print the digital image on a local printer or on any other printer that the user has access to on a local network or on the Global Computer Network; and allow other users on the Global Computer Network to simultaneously share or view and comment on the image by accessing the user's standard Instant Messaging software including AOL™ Instant Messaging and Microsoft™ Instant Messaging.

The designing and affixing of a symbology or identifier into the digital and printed images will now be described in further detail in relation to FIGS. **7**, **8** and **9**.

Initially, a user will select a location for storage of the images the user will capture. The storage location may be folder on the user's local computer. Preferably, the storage location will be an image storage web site on the Internet. In selecting an image storage web site, the user will be presented with a list of image storage web sites in various medium (step **702**). The user will utilize the user input module **124** to indicate which global computer network site (e.g., web site on the Internet) that he wishes the digital images to be stored at. In one embodiment of the present disclosure, the user would be supplied on printed media (such as paper) or digital medium (e.g., a CD, DVD, Flash Memory, or any other digital storage medium) a list to select storage sites for the digital images. The user would then use a computer to connect to one of these sites on the Global Computer Network and, upon connection, would register with the site and be assigned a site location number (SLN) for this global computer storage site, as well as a customer identification number (CIN) (step **704**). The user would then input this information to the digital image capture device **100** with the user input module **124** via text character recognition or voice recognition (step **706**).

In another preferred embodiment of the present disclosure, the user would be supplied a digital medium (e.g., a CD, DVD, Flash Memory, or any other digital storage medium) with a list to select storage sites for the digital images. The user could then use a computer to read the digital medium and would then select the digital storage site that he wished to connect to. The computer would use standard hyperlink pro-

tocols to take the user to the Global Computer Network website for the selected digital image storage site. Upon connection, the user would register with the storage site and be assigned the site location number (SLN) for the global computer storage site, as well as a customer identification number (CIN) (step **704**). The user may then hook up the digital image capture device **100** to the Global Computer Network through the transmission module **112**, and the SLN and CIN would be written to the auxiliary input computer module **126** (step **706**). Alternatively, the user could manually input the SLN and CIN using the user input module **124**.

In still another embodiment of the present disclosure, the user may receive the digital image capture device **100**, **200** with a list of user selectable digital image storage sites preprogrammed into memory. The user would use the user input module **124** in conjunction with the computer processing module **120** and the display module **108**, to select the site that the user wished to store the digital images at. The user would then connect the digital image capture device **100** to the Global Computer Network via the transmission module **112**. Upon connection, the user would register with the storage site and be assigned the site location number (SLN) for the global computer storage site, as well as a customer identification number (CIN) which would appear on the display module (step **704**). This information would then be transferred via the transmission module **112** and written to the auxiliary input computer module **126** (step **706**). Alternatively, if the communications device **200** is employed, the device **200** will be able to connect to the global computer storage site without being connected to a local computer.

When the digital image is captured by the digital image capture device (step **708**), the SLN and CIN as well as the date the image was taken (DIT) and the picture sequence number (PSN) will be written to the associated file or the digital image file for every image that is captured (step **710**). The DIT and PSN will be derived by the auxiliary input computer module **126** as described above. The digital image capture device **100**, **200** will use the computer processing module **120** to encode the SLN, CIN, DIT and PSN as will be described below (step **712**).

In one embodiment of the present disclosure, the SLN will be encoded as a two-digit English language alpha string that is not case sensitive. This will mean that there are 26 alphabet possibilities for each digit since there are 26 letters in the English alphabet. Mathematics tells us that a two letter alpha string that is not case sensitive would allow 676 possible combinations for the string. Alternatively, a two-digit alphanumeric string may be used which would allow 1296 possible combinations for the string.

The CIN will be encoded as a six or seven digit English language alpha string that is not case sensitive. This will mean that there are 26 alphabet possibilities for each digit since there are 26 letters in the English alphabet. Mathematics tells us that a six letter alpha string that is not case sensitive would allow more than 308 million possible combinations for the string. A seven digit alpha string that is not case sensitive would allow more than 8 billion possible combinations. Alternatively, each digit may be comprised of an alphanumeric character.

The DIT will be encoded as a six digit English language date description in the standard American Month, Day, Year (e.g. 010104) format or the European Day, Month, Year (e.g. 301204) format. In either format, this numeric string will denote the date that the digital image was captured and will be supplied to the auxiliary input computer module **126** in conjunction with the computer processing module **120**.

The PSN will be encoded as a three-digit English language alpha string that is not case sensitive. This will mean that there are 26 alphabet possibilities for each digit since there are 26 letters in the English alphabet. Mathematics tells us that a three letter alpha string that is not case sensitive would allow more than seventeen thousand possible combinations for the string. Alternatively, each digit may be comprised of an alphanumeric character which would increase the number possible combinations for the string. The PSN will be supplied by the auxiliary input computer module **126** in conjunction with the computer processing module **120**.

The inventor realizes that in other embodiments of the present disclosure other languages besides English may be substituted and used for the character strings, and that in certain cases alpha, numeric, and symbolic characters may be included in the character strings that make up the SLN, CIN, DIT and PSN. Moreover, as additional combinations are needed for the SLN, CIN, DIT and PSN in different embodiments additional characters may be added to produce further numerical combinations.

After the digital image is captured and stored on the subject digital image capture device **100**, **200**, these files and associated information will be transferred to the user's local computer hardware device or to the Global Computer Network, or to the user's local computer device and then to the Global Computer Network. This transfer will be done by standard digital file transfer means via transmission module **112** including but not limited to hard wire cabling, USB interconnectivity, infrared interconnectivity, Firewire (1394) connectivity, Bluetooth™, removable flash memory cards, Wi-Fi, or any future transmission means. The file name of each digital image file or associated file will be recorded in relational database **600** as well as the files themselves, either on the user's local computer or the Global Computer Network. Referring to FIG. **7**, the information captured necessary to create the symbology or identifier for each image captured will either be incorporated into table **600** or stored as a separate table **628** which is linked to table **600** via the use of private and foreign keys as is known in the art. Record **630** will include all the information necessary for encoding the symbology or identifier. For example, record **630** will include an identifier field **632** for storing the encoded identifier which could also be used as a key for linking the tables, a location of image capture field **634**, a date the image was taken (DIT) field **636**, a time of image capture field **638**, a site location number field (SLN) **640**, a customer identification number (CIN) field **642**, and a picture sequence number (PSN) field **644**.

Once transferred to the user's local computer or storage site, the identifier will be encoded by interacting with the relational database. The local computer processing unit (CPU) will extract the necessary information by parsing the associated information from the database and encode an identifier for each image (step **714**) and, subsequently, store the identifier back in the database. Referring to FIG. **9**, an exemplary identifier **802** is illustrated. As can be seen, the identifier **802** includes at least the SLN, CIN, DIT and PSN. The SLN is retrieved from field **640** of record **630**, the CIN is retrieved from field **642**, the DIT is determined from the date in field **636** and the PSN is retrieved from field **644**.

The user, or any other party, may print out in hardcopy form any of the digital images described herein. The printing will be done once the images are stored on the local computer or the Global Computer Network and recorded in a relational database as described above. The computer processor unit (CPU) that is connected to the printer will read the digital image file and may visually display the image on the CPU's

attached display unit. The symbology or identifier will also be read and this information will be sent to the printer by the CPU to be printed with the digital image in a hardcopy. Based on user input, the CPU will direct the printer to place the symbology in a certain location on the digital image such as top right, top left, bottom right, bottom left, or reverse side of the image. Referring to FIG. **10**A, a hardcopy printed image **900** is shown with identifier **902** printed in a border **901** of the image.

In another embodiment of the present disclosure, the CPU will translate and encode the SLN, CIN, DIT, and PSN to a barcode **904** or barcodes that will print on the image at a user specified location as illustrated in FIG. **10**B. In one embodiment, the barcode would be encoded to read as the SLN as the first two digits, the CIN as the next six or seven digits, the DIT, as the next six digits, and the PSN as the next three digits. Various types of standard barcode formats including but not limited to EAN-13, EAN-13 plus 2, EAN-8, UPC-A, UPC-E, Code 11, Code 39, Code 128, PDF417 or any other custom barcode formats may also be employed. The inventor realizes and the art teaches that other types of symbology would also be able to be used to encode the digital file information.

Once the digital images are printed, the user will input the symbology codes or identifier into a wired or wireless device that will connect to the Global Computer Network (i.e., the Internet). When the identifier or symbology is employed as an alpha string as shown in FIG. **10**A, the user may simply enter the string via the capture recognition device or spoken audio. In another embodiment, the user may scan in the symbology (e.g., a barcode as shown in FIG. **10**B) to a wired or wireless device that will connect to the Global Computer Network (i.e., the Internet). In either embodiment, the user will connect to a pre-specified site on the Internet that shall serve as a Server Lookup site (SLS). Referring back to FIG. **5**, any server **408**, **420**, **422** may serve as the SLS site in addition to being a storage site such as server **420**. This SLS site will include a relational database that will list all digital image storage sites. The user's wired or wireless device will then submit the SLN information to this SLS site and, using standard computer processing power and hyperlink protocols, the SLS site will then transfer the user to the site that the subject digital image is stored at. Once transferred to the appropriate storage site, the user's wired or wireless device will also submit the CIN, DIT and PSN information to this site. Using relational database software and standard computer processing power, the subject site will then locate the stored digital image and any associated files for the image. The site will then process any user request for the digital image such as printing the digital image at a local or global printer, e-mailing the digital image to a recipient or recipients on the Global Computer Network, providing information on the subject image, etc.

The principles of the present disclosure will allow users numerous applications for these imbedded "smart pix" including retrieving image and information from third parties, e.g., a publisher or clearing house. By way of example, a user could see an image in a newspaper or magazine and the user could scan the photo with the hardware device described above. The user could then order the photograph to be downloaded to the user's local computer; request and receive information from the publisher of the image; request and receive other information on the image including attachments; e-mail the photo to someone else; and/or direct the photo to be printed for pickup at a local computer printer or at a commercial printer location.

While the disclosure has been shown and described with reference to certain preferred embodiments thereof, it will be understood by those skilled in the art that various changes in form and detail may be made therein without departing from the spirit and scope of the disclosure as defined by the appended claims.

What is claimed is:

1. A method for managing a plurality of digital images over a network comprising:

receiving, at an imaging web server coupled to the network, a digital image file along with information associated to the digital image file, wherein the digital image file comprises data representing a digital image and the associated information includes at least one of a location of the imaging web server, a customer identification number, a date image was taken, a picture sequence number, a name of the digital image, a time the digital image was taken, location where the image was taken at, author/publisher of the digital image, subject matter of the digital image; keyword for the digital image file and a name of the imaging web server;

parsing the associated information to extract multiple pieces of information from the associated information;

coding the multiple pieces of extracted information of the associated information to create an identifier for the digital image file;

storing the digital image file and the identifier in a database coupled to the imaging web server;

receiving a search request;

querying the database with the search request;

retrieving at least one requested digital image file matching the search request; and

presenting at least one requested digital image corresponding to the at least one requested digital image file to a user.

2. The method as in claim **1**, further comprising the step of printing the digital image with a visual representation of the identifier.

3. The method as in claim **1**, further comprising the steps of:

receiving the identifier of the digital image file and at least one request;

querying the database to retrieve a record associated to the digital image file based on the identifier; and

processing the at least one request with information in the record associated to the digital image file.

4. The method as in claim **3**, wherein the at least one request is displaying of the digital image in a particular sequence, printing of the digital image, e-mailing of the digital image file or storing the digital image file on a second server coupled to the network.

5. The method as in claim **1**, further comprising the steps of:

positioning a hot spot on the at least one requested digital image; and

selecting the hot spot, wherein upon selection the associated information for the corresponding requested digital image is presented to the user.

6. The method as in claim **1**, further comprising the steps of:

positioning a hot spot on the at least one requested digital image; and

selecting the hot spot, wherein upon selection the user is linked to at least a second server storing the at least one requested digital image file.

7. The method as in claim **1**, further comprising the steps of:

receiving a user request pertaining to the at least one requested digital image; and

processing the user request with the associated information of the at least one requested digital image.

8. The method as in claim **7**, wherein the user request is e-mailing of the at least one requested digital image file, purchasing of the at least one requested digital image, resizing of the at least one requested digital image, playing of associated audio or video of the at least one requested digital image, printing of the at least one requested digital image, or simultaneously sharing of the at least one requested digital image file with at least a second user.

9. The method as in claim **1**, wherein the identifier is an alphanumeric string.

10. The method as in claim **1**, wherein the identifier is a barcode.

11. The method as in claim **1**, wherein the identifier is the printed digital image.

* * * * *

EXHIBIT D

US007995118B2

(12) **United States Patent**
Rothschild

(10) **Patent No.: US 7,995,118 B2**
(45) **Date of Patent: *Aug. 9, 2011**

(54) **DEVICE AND METHOD FOR EMBEDDING AND RETRIEVING INFORMATION IN DIGITAL IMAGES**

(75) Inventor: **Leigh M. Rothschild**, Sunny Isles Beach, FL (US)

(73) Assignee: **Rothschild Trust Holdings, LLC**, Sunny Isles Beach, FL (US)

(*) Notice: Subject to any disclaimer, the term of this patent is extended or adjusted under 35 U.S.C. 154(b) by 60 days.

This patent is subject to a terminal disclaimer.

(21) Appl. No.: **12/290,066**

(22) Filed: **Oct. 27, 2008**

(65) **Prior Publication Data**

US 2009/0059014 A1 Mar. 5, 2009

Related U.S. Application Data

(63) Continuation of application No. 10/998,691, filed on Nov. 29, 2004, now Pat. No. 7,450,163.

(51) **Int. Cl.**
H04N 5/76 (2006.01)

(52) **U.S. Cl.** **348/231.3**; 348/231.4; 348/231.5; 348/231.6

(58) **Field of Classification Search** 348/231.2–231.6
See application file for complete search history.

(56) **References Cited**

U.S. PATENT DOCUMENTS

5,737,491 A * 4/1998 Allen et al. 704/270
6,282,362 B1 8/2001 Murphy et al.
6,295,391 B1 9/2001 Rudd et al.
6,373,551 B2 4/2002 Manico et al.
6,642,959 B1 11/2003 Arai
6,657,661 B1 12/2003 Cazier
6,674,923 B1 1/2004 Shih et al.
6,714,736 B2 3/2004 Manico et al.
6,883,146 B2 4/2005 Prabhu et al.
6,947,571 B1 9/2005 Rhoads et al.
7,006,146 B1 * 2/2006 Tanaka et al. 348/376
7,110,964 B2 9/2006 Tengler et al.
7,123,782 B2 10/2006 Shih et al.
7,154,536 B2 12/2006 Kuwayama
7,154,621 B2 12/2006 Rodriguez et al.
7,180,622 B2 2/2007 Cooper
7,321,783 B2 * 1/2008 Kim 455/556.1
7,379,978 B2 5/2008 Anderson et al.
7,415,662 B2 8/2008 Rothmuller et al.
2002/0063901 A1 5/2002 Hicks
2003/0063194 A1 4/2003 Nishiyama et al.
2004/0141084 A1 7/2004 Kurakata
2004/0189807 A1 9/2004 Smith
2005/0036042 A1 2/2005 Haas et al.
2005/0144189 A1 6/2005 Edwards et al.
2005/0258246 A1 11/2005 Wolff et al.
2006/0114337 A1 6/2006 Rothschild
2006/0114338 A1 6/2006 Rothschild
2006/0114514 A1 6/2006 Rothschild
2006/0114516 A1 6/2006 Rothschild
2006/0176516 A1 8/2006 Rothschild

* cited by examiner

Primary Examiner — David L Ometz
Assistant Examiner — Dillon Durnford-Geszvain
(74) *Attorney, Agent, or Firm* — Hespos & Porco

(57) **ABSTRACT**

A digital imaging device and methods thereof that will enable the embedding and retrieving of information in digital images are provided. The digital imaging device includes a capture module for capturing an image and creating a digital image file; an input module for inputting information regarding the captured image; and a processing module for associating the inputted information to the digital image file. The device further includes a scanning module for reading a symbology associated with a printed digital image and wherein the processing module is adapted to use the symbology to retrieve the associated information of the digital image file. The device may be embodied as a digital camera, a mobile phone, personal digital assistant (PDA), etc.

21 Claims, 4 Drawing Sheets

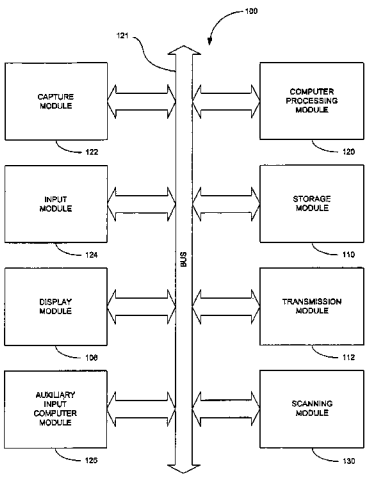

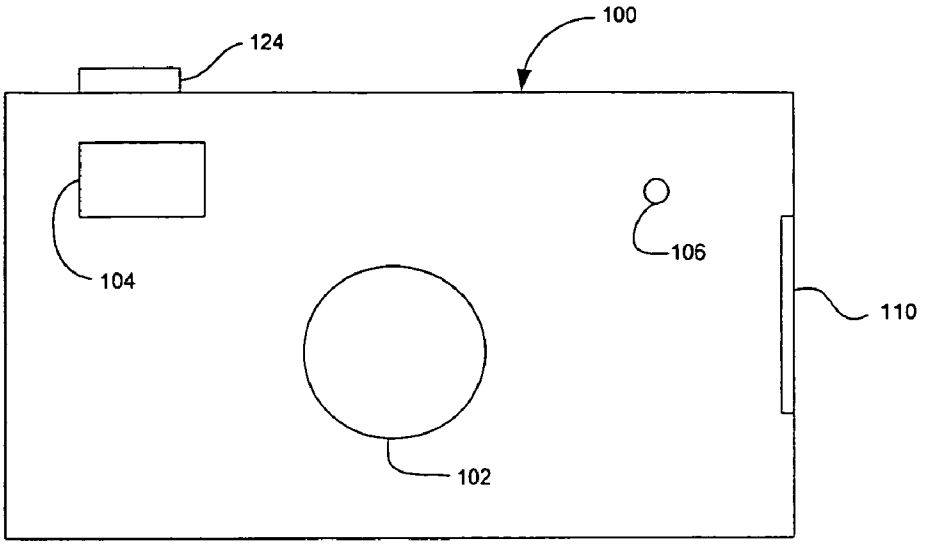

FIG. 1A

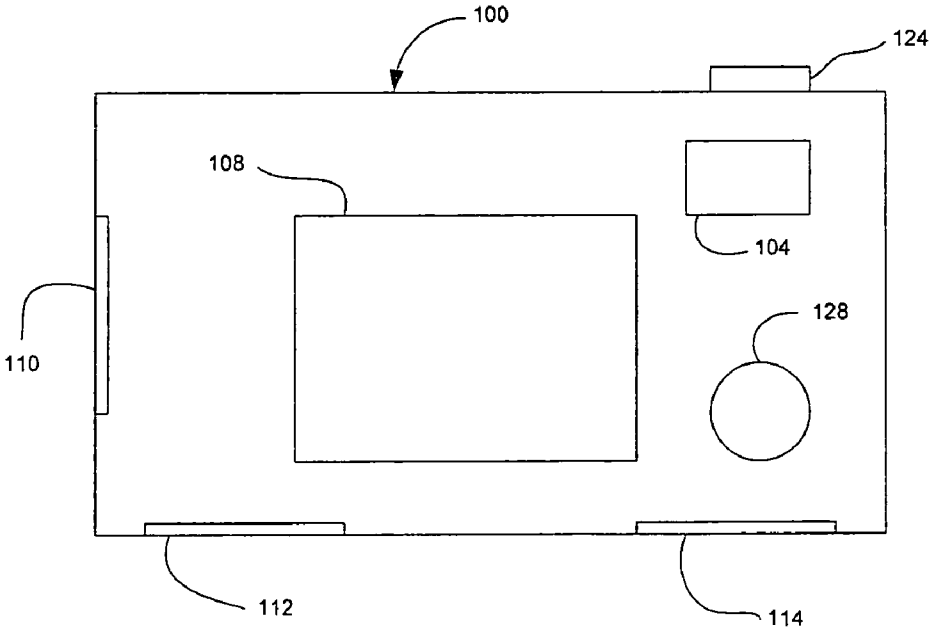

FIG. 1B

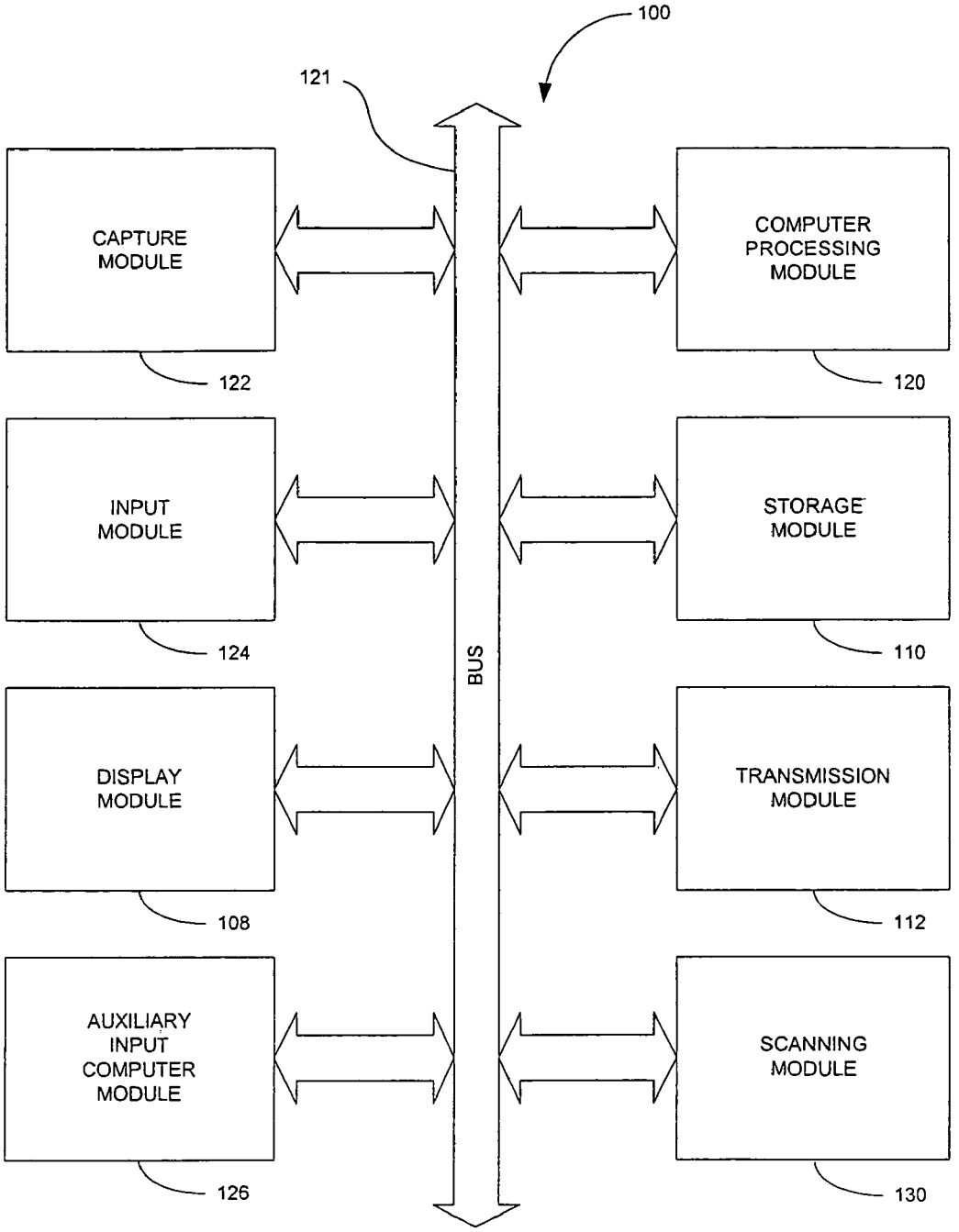
100
121
CAPTURE MODULE
122
INPUT MODULE
124
DISPLAY MODULE
108
AUXILIARY INPUT COMPUTER MODULE
126
BUS
COMPUTER PROCESSING MODULE
120
STORAGE MODULE
110
TRANSMISSION MODULE
112
SCANNING MODULE
130

FIG. 2

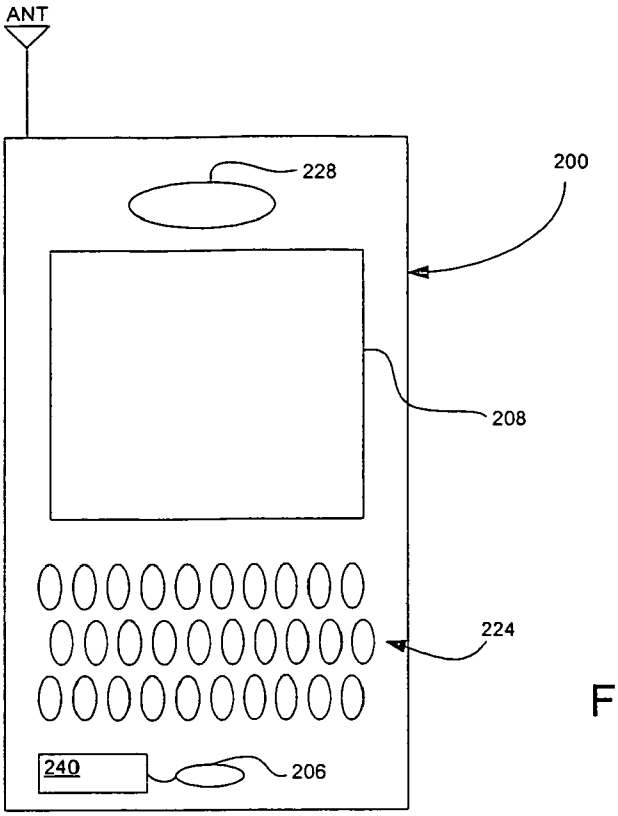

FIG. 3A

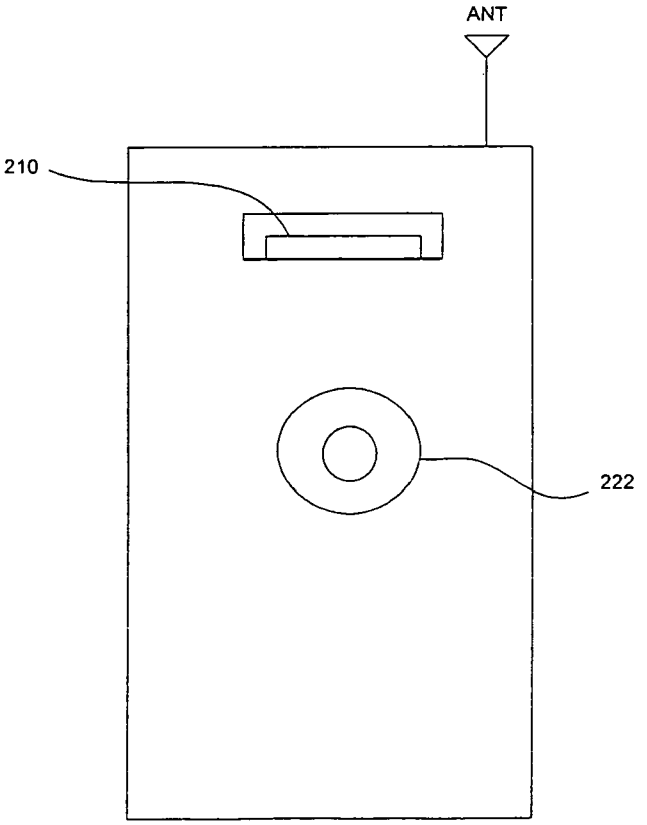

FIG. 3B

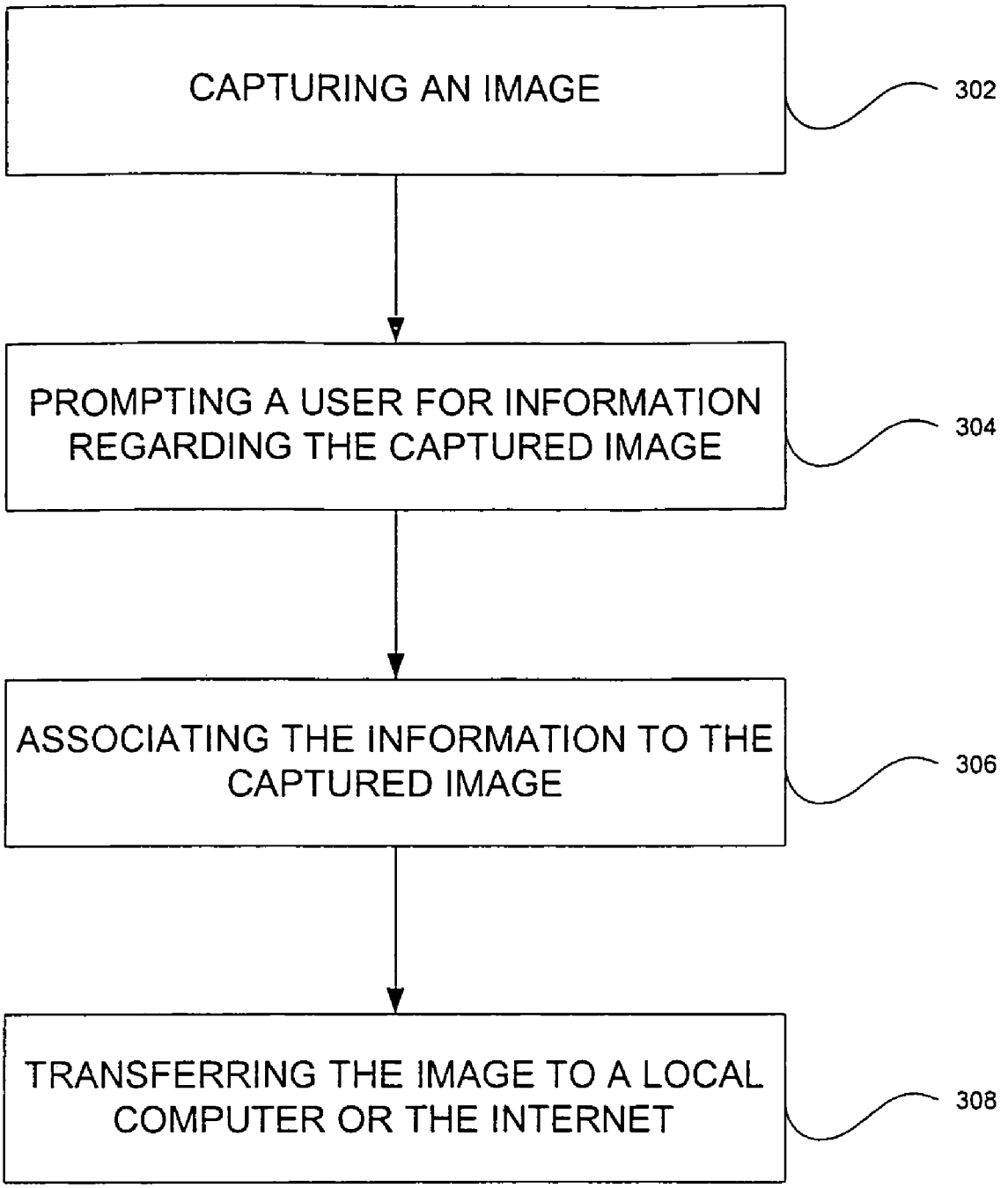
CAPTURING AN IMAGE
302
PROMPTING A USER FOR INFORMATION REGARDING THE CAPTURED IMAGE
304
ASSOCIATING THE INFORMATION TO THE CAPTURED IMAGE
306
TRANSFERRING THE IMAGE TO A LOCAL COMPUTER OR THE INTERNET
308

FIG. 4

DEVICE AND METHOD FOR EMBEDDING AND RETRIEVING INFORMATION IN DIGITAL IMAGES

This application is a continuation application of U.S. application Ser. No. 10/998,691, filed Nov. 29, 2004, entitled "DEVICE AND METHOD FOR EMBEDDING AND RETRIEVING INFORMATION IN DIGITAL IMAGES", the contents of which are incorporated by reference in their entirety.

BACKGROUND

1. Field

The present disclosure relates generally to digital image processing, and more particularly, to devices and methods for embedding and retrieving information in digital images and using the information to organize, process and control the digital images.

2. Description of the Related Art

Photographs are taken for a variety of personal and business reasons. During the course of the year, an individual may take numerous photographs of various events. During these events, quite often there is a variety of different individuals and items present in these photographs. In the prior art, when one desires to catalog these images in a particular order, they usually are left to placing these images manually into photograph albums. This is a very extensive, manual procedure requiring a significant amount of time. In addition, it is very limited with regard to the amount of information that can be associated with the image in a quick and easy manner. While some photo albums allow the writing and placing of text, the entering of this data is a very time consuming and arduous affair. Once having sorted these images into particular albums which may represent categories of interest, it is extremely difficult to retrieve and/or reorganize the images into other categories.

With the advent of digital cameras and digital imaging, the process of organizing images and associating information with the images has become even more difficult. Firstly, upon capturing an image with a digital camera, the camera simply gives the image a numerical file name which usually has no meaning to the user and makes it difficult to retrieve at a later date. Secondly, with the technological advances in file size compression and increased capacity of storage media, several hundred images may be taken before a user downloads the images to a computer or other device, making it a very time consuming task to associate information to each image.

Therefore, a need exists for techniques for easily associating information about an image to the image and using the information to control and retrieve the image.

SUMMARY

A device for capturing, storing, allowing user input, receiving internal input, processing, transmitting, scanning, and displaying digital images is provided. Digital photography has gained a substantial share of the worldwide photographic market. More and more cameras record images in digital form and more and more of these images are stored digitally for retrieval or archival purposes on home and business computers and on the Global Computer Network, e.g., the Internet. The present disclosure describes hardware devices and methods that will facilitate embedding information into digital images of any type (e.g., jpeg, bmp, tiff, etc.) to organize, control and manipulate these images both while in digital form, and later when in printed form.

According to one aspect of the present disclosure, a digital imaging device is provided including a capture module for capturing an image and creating a digital image file; an input module for inputting information regarding the captured image; and a processing module for associating the inputted information to the digital image file. The processing module is adapted to create a separate information file including the inputted information that is linked to the digital image file or to append the inputted information to the digital image file. The device further includes a display module for displaying the captured imaged, wherein the display module is adapted to prompt a user to input information regarding the captured image. Furthermore, the display module may include an audio output device for audibly prompting a user to input information regarding the captured image.

In another aspect of the present disclosure, the device includes a character recognition capture device coupled to the input module for entering information regarding the capture images, wherein the character recognition device is a touch screen overlaid upon the display module.

In a further aspect, the device includes a transmission module for transmitting at least one digital image file and its associated information to a computing device, wherein the transmission module is a hardwired connection, a wireless connection or a removable memory card slot for receiving removable memory.

In another aspect of the present disclosure, the device includes a scanning module for scanning information to be associated with the digital image file. The scanning module will also be employed for reading a symbology associated with a printed digital image and wherein the processing module is adapted to use the symbology to retrieve the associated information of the digital image file.

In still a further aspect of the present disclosure, a mobile communication device is provided including a communication module coupled to an antenna for wirelessly receiving and transmitting communication messages; a capture module for capturing an image and creating a digital image file; an input module for inputting information regarding the captured image; and a processing module for associating the inputted information to the digital image file.

In another aspect of the present disclosure, a method for associating information with a digital image is provided. The method includes the steps of capturing an image and creating a digital image file; prompting a user for information regarding the captured image; receiving information from the user; and associating the received information to the digital image file. The prompting step includes displaying at least one question to the user or audibly producing at least one question to the user. The receiving step further includes the steps of receiving text input via a character recognition capture device; and translating the text input into alphanumeric characters, or alternatively, includes the steps of receiving spoken input via a microphone; and translating the spoken input into alphanumeric characters.

In one aspect, the associating step includes creating a separate information file including the received information that is linked to the digital image file. In another aspect, the associating step includes appending the received information to the digital image file.

The method further includes the step of transmitting the digital image file and associated information to a computing device and retrieving the associated information by scanning a symbology printed with the captured digital image.

BRIEF DESCRIPTION OF THE DRAWINGS

The above and other aspects, features, and advantages of the present disclosure will become more apparent in light of

the following detailed description when taken in conjunction with the accompanying drawings in which:

FIG. **1**A is front view of a device for capturing digital images and embedding information in the captured images according to an embodiment of the present disclosure;

FIG. **1**B is a rear view of the device illustrated in FIG. **1**A;

FIG. **2** is a block diagram of various modules included in a device for capturing images and embedding information in the images in accordance with the present disclosure;

FIG. **3**A is front view of a device for capturing digital images and embedding information in the captured images according to another embodiment of the present disclosure;

FIG. **3**B is a rear view of the device illustrated in FIG. **3**A; and

FIG. **4** is a flowchart illustrating a method for embedding information in a digital image according to an embodiment of the present disclosure.

DETAILED DESCRIPTION

Preferred embodiments of the present disclosure will be described hereinbelow with reference to the accompanying drawings. In the following description, well-known functions or constructions are not described in detail to avoid obscuring the present disclosure in unnecessary detail. Throughout the figures like reference numerals represent like elements.

A hardware device and methods thereof that will enable the embedding and retrieving of information in digital images are provided. The embedded information will enable a user to organize, process and control these images. Referring to FIGS. **1**A and **1**B, a device **100** for capturing images and associating information about the captured images is shown. The device **100** includes a lens **102** coupled to a capture module, which will be described in detail below, for capturing an image and a viewfinder **104** for correctly positioning the device when capturing an image. The device **100** further includes a microphone **106** for acquiring audio, from the user of the device or from the subject of the image, which may be associated with the image.

A rear side of the device **100** is illustrated in FIG. **1**B where a display module **108** is provided for displaying the captured image. As will be described in more detail below, the display module **108** may include a touch screen for facilitating user input of information to be associated with digital image. The device **100** further includes a storage module **110** for storing a plurality of images, a transmission module **112** for transmitting the plurality of images to another device, e.g., a personal computer, a personal digital assistant (PDA), a server residing on the Internet, etc, and a scanning module **114** for scanning and inputting information to be associated with an image and for reading information from printed images.

Referring to FIG. **2**, the various components of the device **100** will now be described. The device will contain a computer processing module **120**, e.g., a microprocessor. The computer processing module **120** will use computer software instructions that have been programmed into the module and conventional computer processing power to interact and organize the traffic flow between the various other modules. It is to be understood that the present disclosure may be implemented in various forms of hardware, software, firmware, special purpose processors, or a combination thereof. A system bus **121** couples the various components shown in FIG. **2** and may be any of several types of bus structures including a memory bus or memory controller, a peripheral bus, and a local bus using any of a variety of bus architectures. The device also includes an operating system and micro instruction code preferably residing in read only memory (ROM). The various processes and functions described herein may either be part of the micro instruction code or part of an application program (or a combination thereof) which is executed via the operating system.

It is to be further understood that because some of the constituent device components and method steps depicted in the accompanying figures may be implemented in software, the actual connections between the device components (or the process steps) may differ depending upon the manner in which the present disclosure is programmed. Given the teachings of the present disclosure provided herein, one of ordinary skill in the related art will be able to contemplate these and similar implementations or configurations of the present disclosure.

Capture module **122** will capture an image desired by the user in digital form. The capture module includes an image sensor, an analog-to-digital (A/D) converter and a digital signal processor (DSP). As the user pushes the device's shutter button **124**, light is allowed to enter through the lens **102** and shine on the image sensor, e.g., a charge-coupled device (CCD) or complimentary metal-oxide semiconductor (CMOS). The image sensor includes preferably millions of photosensors, e.g., pixels, wherein each pixel absorbs the light and transforms the light into an electric charge proportional to the intensity of light. Each charge is transmitted to an A/D converter where the charge is converted into a digital value representing the color the pixel will be, e.g., representing different intensities of red, green and blue. The digital values are then passed to the digital signal processor which enhances the image, compresses it and then stores it in a digital file format in the storage module **110**. The storage module **110** includes internal storage memory, e.g., random access memory (RAM), or removable memory such as a CompactFlash card, Memory Stick, SmartMedia, MultiMediaCard (MMC), SD (Secure Digital) memory, or any other memory storage that exists currently or will exist in the future. The digital file format utilized to store the image is not critical, but may include standard file formats which currently exist or will exist in the future for example jpeg, tiff, bmp, gif, pcx, png or other file formats.

The device **100** will also contain a display module **108** for the user to view acquired images. This display may be in any current form in the art, including Liquid Crystal Displays (LCD), Light emitting diode displays (LED), Cathode Ray Tube Displays (CRT) or any other type of display currently existing or existing in the future. The display module **108** will also include an audio output device **128**, e.g., a speaker, headphone jack, etc., allowing the user to also hear audio output from the hardware device. An additional but optional embodiment of the present disclosure may also include video or computer output jacks that will allow the user to hook the subject hardware device to an external television display device or a computer.

The hardware device **100** of the present disclosure will contain a user input module **124** to either receive user instructions via text input by the way of a standard keyboard interface, or a character recognition capture device which translates user text input into alphanumeric characters. Preferably, the character recognition device is a touch screen which overlays the display module **108** and text is entered via a pen-like stylus. Such input devices are standard and currently available on many electronic devices including portable digital assistants (PDAs) and cellular telephones. Alternatively, microphone **106** will be coupled to the input module **124** and the input module will further include a analog-to-digital

(A/D) converter and a voice recognition processor that translates human voice into alpha numeric characters for user input.

The user will utilize the user input module after an image is captured to enter various data that will either be stored as a file associated with the digital image file or alternatively written as an additional part of the digital image file. By example, if the digital image is recorded by the hardware device as jpg101 or tif101 or bmp101 where these descriptions indicate the name of the captured digital image, then another file will be created for each captured digital image. This file would be the information associated file. In the above example, the image jpg101 would now have an additional file called info101 (or any other name that the hardware device selects). This digital file would receive and contain the user inputted information. Alternatively, the user input module may write its information directly to the previously stored digital file. By example, if the digital image is recorded by the hardware device as jpg101 or tif101 or bmp101 where these descriptions indicate the name of the captured digital image, then this file will be appended with the additional information written from the user input module, for example, in the header of the digital image file.

The device **100** will also include an auxiliary input computer module **126**. This module will allow the hardware device to automatically and simultaneously (with image capture) store information in the associated file or alternatively in the same file as the digital image. The information from the auxiliary input module **126** will flow directly from the various input processors contained in the hardware device. These processors may include but are not limited to a processor to determine the individual number of the picture in the sequence of pictures shot that are captured and stored, a Global Positioning System (GPS) chip to determine the geographic location of where the image was taken, a date chip to determine the date and time the image was taken, a voice capture device to capture comments on the image, and various other input processors that will provide additional information relevant to the digital information, all information which the auxiliary input module will store as information in the info files or directly as addenda in the digital image files. Knowledge of the art, indicates that the individual processors such as GPS, date time and voice storage, may be separate processors or may also be incorporated as one computer processor.

After the digital image is captured and stored on the device **100**, these files will be transferred to the user's local computer hardware device or to the Global Computer Network, e.g., the Internet, or to the user's local device and then to the Global Computer Network. This transfer will be done by transmission module **112** including hardwired and/or wireless connectivity. The hardwire connection may include but is not limited to hard wire cabling e.g., parallel or serial cables, USB cable, Firewire (1394 connectivity) cables and the appropriate port. The wireless connection will operate under any of the various known wireless protocols including but not limited to Bluetooth™ interconnectivity, infrared connectivity, radio transmission connectivity including computer digital signal broadcasting and reception commonly referred to as Wi-X or 80211.X (where x denotes the type of transmission), or any other type of communication protocols or systems currently existing or to be developed for wirelessly transmitting data. Furthermore, the transmission module **112** may include a removable memory card slot for accepting any of the various known removable memory cards, transferring the image files to the removable card, and subsequently the images may be uploaded to a computer from the removable memory card by an appropriate reader coupled to the user's computer. The file name of each digital image file and/or associated file will be recorded in a relational database either on the user's local computer or the Global computer network. This database will contain information on any file(s) related to each digital image including audio and video files, or other associated image files.

The user, or any other party, may print out any of the digital images described herein. The printing will be done once the images are stored on the local computer or the Global Computer Network and recorded in a relational database as described above. When the images are printed out, the computer that prints the image will cause the image to be printed with symbology that encodes that file name of the image and file location of the image, or any other coding that will provide access to the file name and file location. This file name will be the assigned name that the image was stored in at the relational database, as well as the assigned location of the relational database whether in the user's local computer or at a stored location on the Global Computer Network. The symbology may be in any form currently practiced in the art including barcodes (e.g., UPC, EAN, PDF417, etc.), photosymbols, standard or specialized text, etc, or any future type of symbology. Of course, as stated, any symbology utilized will represent or lead to the file names and file locations of the digital images.

The device **100** will further include an integrated scanning module **130** that will contain a light source, e.g., LED, and photocell coupled to the computer processing module **120**, or alternatively, will includes a separate decoder engine that will decode the data received by the photocell before sending it to the computer processing module **120**. Knowledge of the art reveals that many different types of scanners currently exist and the inventor realizes that the type of scanner would depend upon the type of symbology that is utilized in the printed images. The user will be able to scan the printed digital images with the device **100** and the scanning module **130** would scan in the symbology and using standard computer programming and the computer processing module, the device would translate the symbology to extract the name of the digital image and the file locations (whether local or on the Global Computer Network) of the digital image. Alternatively, the scanner may extract some type of marker or symbol that when presented to the relational database would indicate the file name and file location of the digital images. This information would then be transferred to the transmission module which will transmit it to the local or Global computer Network which will then submit it to the relational database containing information on the digital images. Using standard computer programming and processing, this database would then locate the stored digital image and associated files and also process the users request(s) regarding the digital image.

If the subject hardware device is coupled to a computer via the transmission module **112**, then the hardware device **100** will receive back and display the processed requests on the display module **108**. By example, a user may scan in a printed digital image with the hardware device **100** and then receive that image for display on his device, along with auxiliary information on the image, and along with auxiliary and associated audio and video files that can be displayed on the hardware device via the display module **108**.

Referring to FIGS. **3**A and **3**B, another embodiment of the present disclosure is illustrated. Here, a device **200** according to the principles of the present disclosure is embodied as a mobile phone. Device **200** includes a microphone **206** having the same functionality as microphone **106** and is further coupled to a communication module **240** for encoding a user's speech to be transmitted via antenna ANT using

CDMA, PCS, GSM or any other known wireless communication technology. Device **200** further includes display module **208** for displaying captured images and preferably the display module will have a touch screen overlaid upon it which will enable user input via a stylus. The user may also enter phone numbers to be dialed via the touch screen. As is known in the mobile phone art, device **200** may include a full QWERTY keyboard **224** as an input module to enter text information to be associated to captured images. Earpiece or speaker **228** may be utilized to play audio clips associated with images in addition to being coupled to the antenna ANT and a decoder for receiving and decoding voice communication from another mobile phone.

Preferably, the antenna ANT is coupled to a transmission module similar to the one described above in relation to FIG. **2**. The transmission module will compress and encode captured images for transmission using any known wireless communication technology. Transmitting images via wireless technology will facilitate the transferring of images to an online photo storage site or to an online photo developing service provider.

Referring to FIG. **3**B, a rear side of device **200** is shown. Capture module **222** is employed for capturing images and when disposed on a rear side of device **200** is used in conjunction with display module **208** for positioning a subject of the image in lieu of a viewfinder. In this embodiment, the capture module **222** may also be used in conjunction with the scanning module to read symbology associated with an image. Here, the capture module will acquire an image of the symbology and the scanning module will further include a digital signal processor executing an algorithm for deciphering or decoding the symbology from the capture image. The use of an image sensor to read symbology, e.g., a barcode, is known in the art and systems employing such technology is commercially available from Symbol Technologies of New York.

Similar to the embodiments described in relation to FIGS. **1** and **2**, device **200** includes a storage module **210** for storing images via a removable memory card.

In utilizing the hardware device described herein, the user will be able to accomplish the various applications of the disclosure which are described below in relation to FIG. **4**.

A user takes several pictures with his imaging device (step **302**). In one example, the picture is of a baby in Las Vegas. The next picture is of a Monet painting hanging in a gallery in Las Vegas. Another picture is of the user's wife. At end of taking pictures or alternatively, immediately after taking each individual picture, the user goes back to the device **100**, **200** and using either keystroke input via input module **124** or voice recognition software via a microphone, or any other input means the user is prompted to provide the following information regarding the pictures, i.e., the images taken (step **304**):

(1) The file location to store the photos or images once they are transferred to permanent memory storage, e.g., a local computer or a server residing on the Internet. For the first picture the user indicates that he would like the photo stored under his baby picture file, e.g., a folder on his local computer, for the second picture his famous art file, and for third picture his file with pictures of his wife.

(2) The user is then asked via the speaker, or prompted on the display module **108**, **208**, if he wants to attach any audio or video to the images to stay associated with the images once they are stored. He indicates that for the first image he wishes to record an audio file indicating: "this is a picture of my baby girl Samantha here in Las Vegas. Boy is she cute." For the second image: "Loved this Monet and had previously seen it in at the Louvre last year" for third: "Jenny is wearing the new dress that I just bought her" also for number three picture please attach the video file entitled Jenny's day in Las Vegas to this picture.

(3) The user now is asked via text input or voice recognition or any other input means, whether they will be storing these photos online. The answer would be either Yes or No. If the user answers Yes, a predetermined site could have been selected and pre-stored in the camera hardware device (for instance the Ofoto or Imagestation site) and selected photos would automatically go to that location for upload when the digital images are transferred.

The hardware device retrieves (from input that it receives from the auxiliary input computer module **126**) the time and location of the images. The hardware device also knows (from memory that was pre-stored in the hardware) the name and identification information on the owner of the hardware device or any guest using the device. Moreover, the hardware device will also store the number of the digital image by recording the order that the image was taken in. The user can also flag (select) any images that he would like to have printed or emailed.

The various information is then complied and either stored as a separate information file associated to the image or appended to the digital image file and stored for example in the header of the image file (step **306**).

The user will now transfer the images to his local computer workstation which may or may not be connected to the Global Computer Network via transmission module **112** (step **308**). When the computer receives these imbedded 'smart pix' images, the computer will:

a. Sort and file the images in the file or folder selected including storing the files with the associated information and audio and video attachments;
b. Perform any actions requested for the photos including, email the photos to a selected user or users and print the photos on designated printers in a size pre-selected; and
c. With a connection to the Global Computer Network, automatically upload the photos and associated attached files to the specified server site (Ofoto, or Smartpix, for instance) for storage and retrieval.

Once the images are printed, the user will be enabled, regardless of the time elapsed since the images were taken, to take a hardware device (possibly the camera device that the user utilized to take the images, or another hardware reader device) and scan it over a photo. The device will read the symbology in the images and using standard communications techniques including Wifi or Bluetooth, Infrared, or Cabling, etc., the scanning/reading device will transmit the photo identifier information to a computer processor which then may optionally transfer it to the Global Computer Network. The device will then receive the information back from the local processor or Global Computer Network and will then locate the file or files that contain the image and associated attachments on the local or Global Computer Network.

By example, the user holds the scanning device over images of a child on the beach and an audio track then comes back: "Daddy I love this beach and I love you". The user would also be able to instantly receive information on the photo such as when and where the photo was taken and who the photographer was. The user could also request that the photo be printed to a local printer in a specific size or that the picture be emailed to a selected recipient. Other user requests could include asking the computer to display all associated photos, and file attachments, or to store the photo in a selected location on the local computer or the Global Computer Network.

While the disclosure has been shown and described with reference to certain preferred embodiments thereof, it will be understood by those skilled in the art that various changes in form and detail may be made therein without departing from the spirit and scope of the disclosure as defined by the appended claims.

What is claimed is:

1. A digital imaging device comprising:

a first capture module for capturing an image and creating a digital image file, the digital image file comprising data representing the captured image;

a display module disposed on the digital imaging device for displaying the captured image and configured to prompt a user to input information regarding the captured image;

an input module disposed on the digital imaging device for enabling the user to input subject information related to a subject of each captured image and to input storage location information indicative of a storage location on a separate external computing device for storing each digital image file after transfer from the digital imaging device;

a second capture module configured to scan coded information to be associated with the captured image;

a processing module for associating the subject information, storage location information, and the coded information to the digital image file; and

a transmission module for transmitting the digital image file and the associated information to the external computing device for storage or data lookup.

2. The device as in claim **1**, wherein the display module is further adapted for displaying the associated information.

3. The device as in claim **1**, wherein the coded information associated with the digital image file is printed with the captured image.

4. The device as in claim **1**, wherein the coded information associated with the digital image file is displayed with the captured image.

5. The device as in claim **1**, further comprising a microphone for acquiring audio to be associated to the digital image file.

6. The device as in claim **1**, further comprising a storage module for storing at least one digital image file and the inputted information and coded information associated to the at least one digital image file.

7. The device as in claim **1**, wherein the transmission module is a hardwired connection, a wireless connection or a removable memory card slot for receiving removable memory.

8. The device as in claim **1**, further comprising an auxiliary input module for determining a geographic location of where the captured image was taken, wherein the processing module associates the determined geographic location to the captured image.

9. The device as in claim **1**, wherein the second capture module is further adapted for scanning information to be associated with the digital image file.

10. The device as in claim **1**, wherein the processing module is adapted to create a separate information file including the inputted information that is associated to the digital image file.

11. The device as in claim **1**, wherein the processing module is adapted to append the inputted information to the digital image file.

12. The device as in claim **1**, wherein the digital imaging device is a personal digital assistant (PDA).

13. The device as in claim **1**, wherein the digital imaging device is a mobile phone further comprising:

a communication module coupled to an antenna for wirelessly receiving and transmitting communication messages;

wherein the transmission module is further coupled to the antenna for transmitting the digital image file and the associated information to the external computing device for storage or data lookup.

14. The device in claim **13**, further comprising a microphone for acquiring audio to be associated to the digital image file.

15. The device as in claim **13**, further comprising an audio output device for audibly prompting the user to input information regarding the captured image and for audibly producing the received communication messages.

16. The device as in claim **1**, further comprising an auxiliary input module for generating auxiliary information related to the captured image, wherein the auxiliary information is date, time, sequence number of the capture image and user information.

17. The device as in claim **1**, wherein the second capture module is further adapted for reading the coded information associated with the digital image file, the transmission module is further adapted to transmit the coded information to the external computing device and receive the digital image file and associated information retrieved at the external computing device based on the coded information, and the display module is further adapted for displaying the captured image associated with the retrieved digital image file.

18. The device as in claim **1**, further comprising an auxiliary input module for generating auxiliary information related to the captured image, wherein the processing module associates the auxiliary information to the digital image file.

19. A method for associating information with a digital image, the method comprising the steps of:

providing a digital imaging mobile device;

capturing an image and creating a digital image file with the mobile device, the digital image file comprising data representing the captured image;

prompting a user of the digital imaging mobile device for information regarding the captured image;

receiving input information and storage location information from the user for each digital image file, the input information being indicative of a subject of the respective captured image and the storage location information being indicative of a storage location on a separate external computing device for storing each digital image file after transfer from the digital imaging mobile device;

scanning coded information to be associated with the captured image;

associating the input information, storage location information and coded information to the digital image file; and

transmitting the digital image file and associated information to the external computing device for storage or data lookup.

20. A digital imaging device comprising:

a capture module for capturing an image and creating a digital image file, the digital image file comprising data representing the captured image;

an input module disposed on the digital imaging device for enabling a user to input subject information related to a subject of each captured image and to input storage location information indicative of a storage location on a separate external computing device for storing each digital image file after transfer from the digital imaging device and for receiving coded information to be associated with the captured image;

a processing module for associating the subject information, storage location information, and coded information to the digital image file; and

a transmission module for transmitting the digital image file and the associated information to the external computing device for storage or data lookup.

21. The device as in claim **20**, further comprising a display module disposed on the digital imaging device, wherein the transmission module is further adapted to retrieve the digital image file and associated information from the external computing device, and wherein the display module is adapted to display the captured image associated with the retrieved digital image file along with the input information and symbology information associated with the retrieved digital image file.

* * * * *