KARIN G. PAGNANELLI (SBN 174763), kgp@msk.com
ALEXA L. LEWIS (SBN 235867), all@msk.com
MITCHELL SILBERBERG & KNUPP LLP
11377 West Olympic Boulevard
Los Angeles, CA 90064-1683
Telephone: (310) 312-2000
Facsimile: (310) 312-3100

Attorneys for Plaintiff
High Quality Printing Inventions, LLC

UNITED STATES DISTRICT COURT

NORTHERN DISTRICT OF CALIFORNIA

HIGH QUALITY PRINTING INVENTIONS, LLC, Plaintiff, v. SHUTTERFLY, INC., Defendant.	CASE NO. 8:15-CV-05437 **COMPLAINT FOR PATENT INFRINGEMENT** **Demand for Jury Trial**

Plaintiff High Quality Printing Inventions, LLC, for its Complaint against Defendant Shutterfly, Inc., states as follows:

I. THE PARTIES

1. Plaintiff High Quality Printing Inventions, LLC ("HQPI") is a Delaware limited liability company.

2. Upon information and belief, Defendant Shutterfly, Inc., ("Defendant") is a Delaware corporation with its principal place of business located at 2800 Bridge Pkwy, Redwood City, CA 94065. Upon information and belief, Defendant does business in California, including in this district. Defendant may be served with process through service upon its registered agent, Corporation Service Company, located at 2710 Gateway Oaks Dr., Ste. 150N, Sacramento, CA 95833.

II. NATURE OF ACTION

3. This is a patent infringement action to stop Defendant's infringement of U.S. Patent No. 6,012,070 (the "'070 Patent").

III. JURISDICTION AND VENUE

4. This Court has subject matter jurisdiction over this action under 28 U.S.C. §§ 1331 and 1338(a) because it arises under the Patent Laws of the United States, United States Code, Title 35.

5. Venue is proper in this district under 28 U.S.C. §§ 1391(c) and 1400(b). On information and belief, Defendant has a regular and established place of business in this district, has transacted business in this district, and/or has committed acts of patent infringement in this district.

6. On information and belief, Defendant is subject to this Court's specific and general personal jurisdiction pursuant to due process and/or the California Long Arm Statute, due at least to its substantial business in this forum including but not limited to: (i) at least a portion of the infringements alleged herein; and (ii) regularly doing or soliciting business, engaging in other persistent courses of conduct, and/or deriving substantial revenue from goods and services provided to individuals in California and in this district.

IV. GENERAL SUMMARY OF THE TECHNOLOGY AT ISSUE

7. The invention in the ’070 Patent relates generally to the field of publishing and printing.

8. More specifically, the invention relates to systems and methods of producing customized business forms or brochures.

9. According to the invention in the ’070 Patent, an end user, without layout experience, by using a plurality of templates can replace text, can choose low resolution pictures from the graphic templates, and can create customized, quality documents. The documents in electronic format may then be readily transported (*e.g.*, electronically over phone lines) to a printing facility where physical documents can be automatically created with quick turnaround full process color high resolution printing.

10. Thus, the invention relates to a method of producing business forms or brochures, and doing so by only displaying low resolution graphics at the user station, yet producing the final product with high resolution graphics.

V. CAUSES OF ACTION

COUNT I

11. HQPI incorporates the preceding paragraphs as though fully set forth herein.

12. HQPI owns, by assignment, the ’070 Patent entitled “Digital Design Station Procedure.” A true and correct copy of the ’070 Patent is attached hereto as Exhibit 1.

13. Upon information and belief, Defendant, in violation of 35 U.S.C. § 271, has infringed, literally or through the doctrine of equivalents, and continues to infringe at least claim 20 of the ’070 Patent through Defendant’s using a method of producing customized business forms or brochures using a plurality of low resolution graphics templates in electronic form at a user station including a video monitor, selection device, and processor, and selling and offering services that include this method (the “Infringing Services”).

14. Exemplary Infringing Services include, without limitation, Defendant’s online customizable design and printing services offered on its website located at https://www.shutterfly.com/, including but not limited to services offered specifically at

https://www.shutterfly.com/cards-stationery. Defendant advertises and offers its online customizable design and printing services, through which customers can select templates provided by Defendant to create customized business forms, brochures, and other documents, to be printed in high resolution by Defendant.

15. The steps of the invention disclosed in the '070 Patent that are practiced at the user station, even if performed by a separate actor (*e.g.*, a customer), are attributable to Defendant, such that Defendant is responsible for the infringement.

16. All steps of the claimed methods are performed by or attributable to Defendant because, upon information and belief, Defendant directs or controls its customers' performance of certain method steps.

17. Upon information and belief, Defendant directs or controls the performance of those steps performed at the user station because Defendant conditions participation in an activity or receipt of a benefit upon performance of a step or steps of the patented method and establishes the manner or timing of that performance.

18. Upon information and belief, Defendant conditions customers' use of its services, including the use of its templates, upon customers' performance of the steps practiced at the user station (*e.g.*, selecting one or more templates to create a customized document in electronic format, electronically saving the customized document in electronic format, and transmitting the saved customized document to the printing installation without transmitting a document, physical graphics, or templates from the user station).

19. Upon information and belief, Defendant requires its customers to sign a contract and/or agree to certain terms of use that delineates the steps customers must perform if they use Defendant's services, including the use of its templates.

20. Upon information and belief, Defendant establishes the manner or timing of its customers' performance by providing instructions regarding how to use Defendant's services, including the use of its templates, and providing customer support services if the customer experiences any problems.

21. Upon information and belief, if Defendant's precise steps are not followed, Defendant's services may not be available or may be delayed.

22. Thus, upon information and belief, Defendant's customers do not merely take Defendant's guidance and act independently on their own, but rather, Defendant establishes the manner and timing of its customers' performance so that customers can only avail themselves of Defendant's services, including the use of its templates, upon their performance of the method steps.

23. Defendant has not given the Infringing Services a specific and publicly-available name. Accordingly, Plaintiff cannot provide the name used by Defendant for such services without the benefit of discovery.

24. Defendant has sufficient experience and knowledge of digital design station technology generally, and of its systems and methods specifically, to determine which of its systems and methods produce customized business forms, brochures, and other documents through the use of low resolution graphics templates and text templates.

25. Defendant has sufficient experience and knowledge of digital design station technology generally, and of its systems and methods specifically, to determine which of its systems and methods do not produce customized business forms, brochures, and other documents through the use of low resolution graphics templates and text templates.

26. Defendant further infringes the applicable claim(s) of the '070 Patent by making, offering for sale, and selling products made through use of the method(s) claimed therein.

27. On information and belief, Defendant will continue to infringe the '070 Patent unless enjoined by this Court.

28. HQPI reserves the right to assert willful infringement of the '070 Patent if discovery reveals that Defendant's infringement of the '070 Patent is, has been, and/or continues to be willful and deliberate.

29. As a direct and proximate result of Defendant's infringement of the '070 Patent, HQPI has been and continues to be damaged in an amount yet to be determined.

30. Unless Defendant's ongoing infringement is enjoined, HQPI will suffer irreparable injury for which there is no adequate remedy at law.

31. This is an exceptional case such that HQPI should be entitled to its reasonable attorney fees and expenses incurred in prosecuting this action and defending any counterclaims brought by Defendant.

VI. REQUEST FOR RELIEF

Wherefore, HQPI requests the following relief:

1. A judgment in favor of HQPI that Defendant has infringed at least claim 20 of the '070 Patent;

2. A permanent injunction enjoining Defendant and its officers, directors, agents, servants, affiliates, employees, divisions, branches, subsidiaries, parents, and all other actors acting in active concert therewith from infringing the '070 Patent;

3. A judgment and order requiring Defendant to pay HQPI its damages in an amount not less than a reasonable royalty, treble damages, costs, expenses, and prejudgment and post-judgment interest for Defendant's infringement of the '070 Patent, as provided under 35 U.S.C. § 284;

4. A judgment and order finding that this is an exceptional case within the meaning of 35 U.S.C. § 285, and awarding to HQPI its reasonable attorney fees and expenses; and

5. Any and all other relief that the Court deems just and proper.

DATED: November 25, 2015

Respectfully submitted,

MITCHELL SILBERBERG & KNUPP LLP

By: /s/ Alexa L. Lewis
Karin G. Pagnanelli
Alexa L. Lewis
Attorneys for Plaintiff
High Quality Printing Inventions, LLC

DEMAND FOR JURY TRIAL

HQPI requests a jury for all issues so triable.

DATED: November 25, 2015

Respectfully submitted,

MITCHELL SILBERBERG & KNUPP LLP

By: /s/ Alexa L. Lewis
Karin G. Pagnanelli
Alexa L. Lewis
Attorneys for Plaintiff
High Quality Printing Inventions, LLC

EXHIBIT 1

EXHIBIT 1

US006012070A

United States Patent [19]

Cheng et al.

[11] Patent Number: 6,012,070

[45] Date of Patent: Jan. 4, 2000

[54] **DIGITAL DESIGN STATION PROCEDURE**

[75] Inventors: **Mai-Ing L. Cheng**, Williamsville; **Paul Coniglio**, Buffalo; **Donna Yarwood**, Amherst; **Larry Chism**, Grand Island, all of N.Y.

[73] Assignee: **Moore Business Forms, Inc.**, Grand Island, N.Y.

[21] Appl. No.: **08/749,641**

[22] Filed: **Nov. 15, 1996**

[51] **Int. Cl.**[7] **G06K 9/20**

[52] **U.S. Cl.** **707/505**

[58] **Field of Search** 707/505, 506, 707/501, 513, 514, 517

[56] **References Cited**

U.S. PATENT DOCUMENTS

4,437,122	3/1984	Walsh et al.	358/166
4,730,252	3/1988	Bradshaw	364/403
5,029,099	7/1991	Goodman	364/479
5,038,293	8/1991	Goodman	364/479
5,132,915	7/1992	Goodman	364/479
5,144,693	9/1992	Morgan	395/158
5,148,520	9/1992	Morgan	395/148
5,241,464	8/1993	Greulich et al.	364/401
5,251,291	10/1993	Malcolm	395/146
5,263,132	11/1993	Parker et al.	395/146
5,379,373	1/1995	Hayashi et al.	395/148
5,398,183	3/1995	Elliott	364/413.06
5,428,694	6/1995	Betts et al.	382/317
5,442,567	8/1995	Small	364/479
5,452,094	9/1995	Ebner	358/296
5,490,243	2/1996	Millman et al.	395/148
5,555,101	9/1996	Larson et al.	358/403
5,696,845	12/1997	Loce et al.	382/254
5,734,915	3/1998	Roewer	395/773

Primary Examiner—Joseph H. Feild
Assistant Examiner—Alford W. Kindred
Attorney, Agent, or Firm—Nixon & Vanderhye

[57] **ABSTRACT**

A customized business form or brochure having high resolution color graphics may be created by an end user without layout experience at a computer terminal at a user site to provide a customized business form or brochure in electronic format. Low resolution graphics templates (as well as textual templates) are provided at the user station to facilitate production of the customized business form and brochure and once the created document in electronic format is saved at the user station it may be electronically or otherwise transmitted to a printing installation without the necessity of transmitting a final document with high resolution color graphics in physical form. At the printing installation a physical copy (e.g. paper copy) of the business form or brochure is imaged (e.g. with a printing press or using ion deposition or other non-impact imaging techniques) with high resolution color graphics. Multiple customized business forms or brochures may be collected from a plurality of user stations and transmitted collectively to the printing installation, and multiple and distinct graphic depictions may be provided on the same document page.

20 Claims, 16 Drawing Sheets

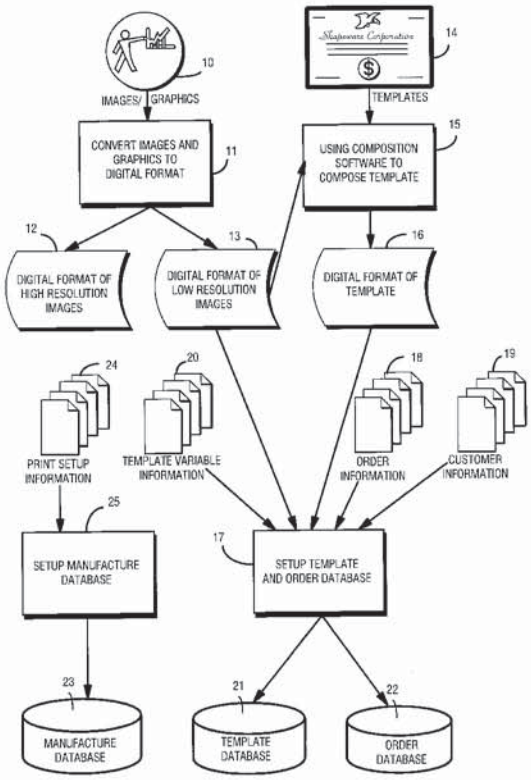

Fig. 1

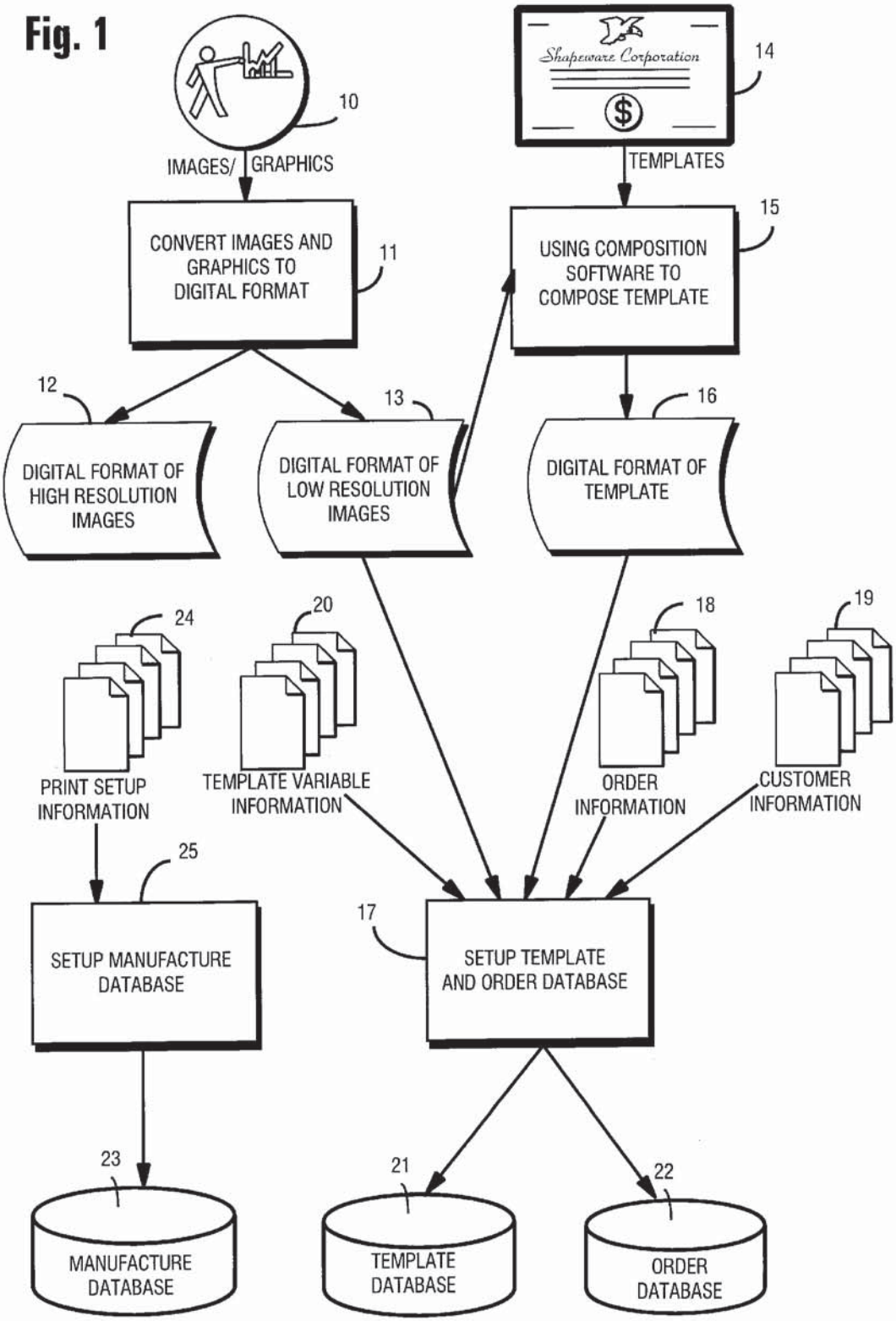
10
IMAGES/ GRAPHICS
Shapeware Corporation
14
TEMPLATES
CONVERT IMAGES AND GRAPHICS TO DIGITAL FORMAT
11
USING COMPOSITION SOFTWARE TO COMPOSE TEMPLATE
15
12
13
16
DIGITAL FORMAT OF HIGH RESOLUTION IMAGES
DIGITAL FORMAT OF LOW RESOLUTION IMAGES
DIGITAL FORMAT OF TEMPLATE
24
20
18
19
PRINT SETUP INFORMATION
TEMPLATE VARIABLE INFORMATION
ORDER INFORMATION
CUSTOMER INFORMATION
25
17
SETUP MANUFACTURE DATABASE
SETUP TEMPLATE AND ORDER DATABASE
23
21
22
MANUFACTURE DATABASE
TEMPLATE DATABASE
ORDER DATABASE

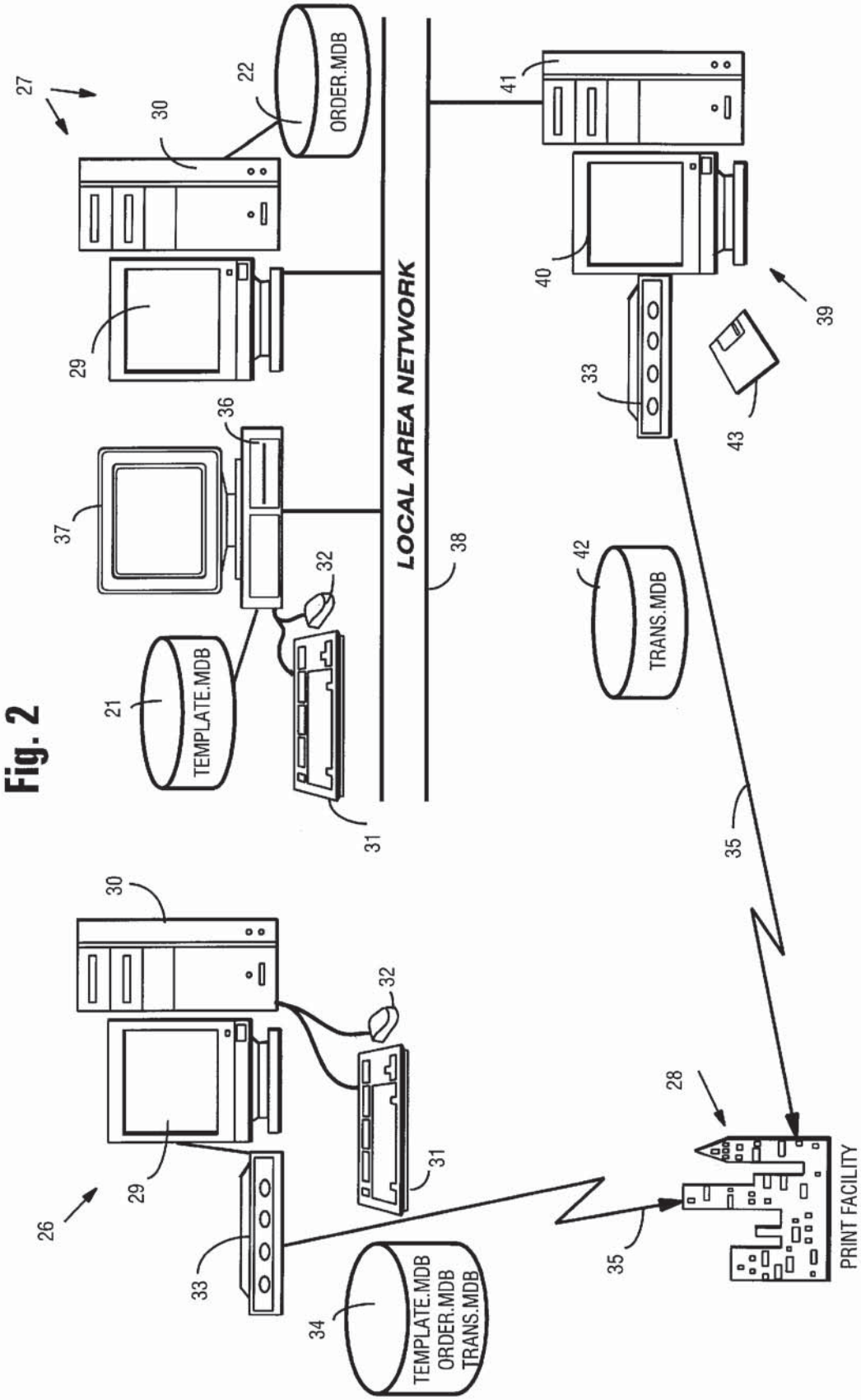
27
30
22
ORDER.MDB
29
36
37
32
21
TEMPLATE.MDB
31
LOCAL AREA NETWORK
38
41
40
39
33
43
42
TRANS.MDB
35
30
32
29
26
33
31
34
TEMPLATE.MDB
ORDER.MDB
TRANS.MDB
35
28
PRINT FACILITY

Fig. 2

Fig. 3

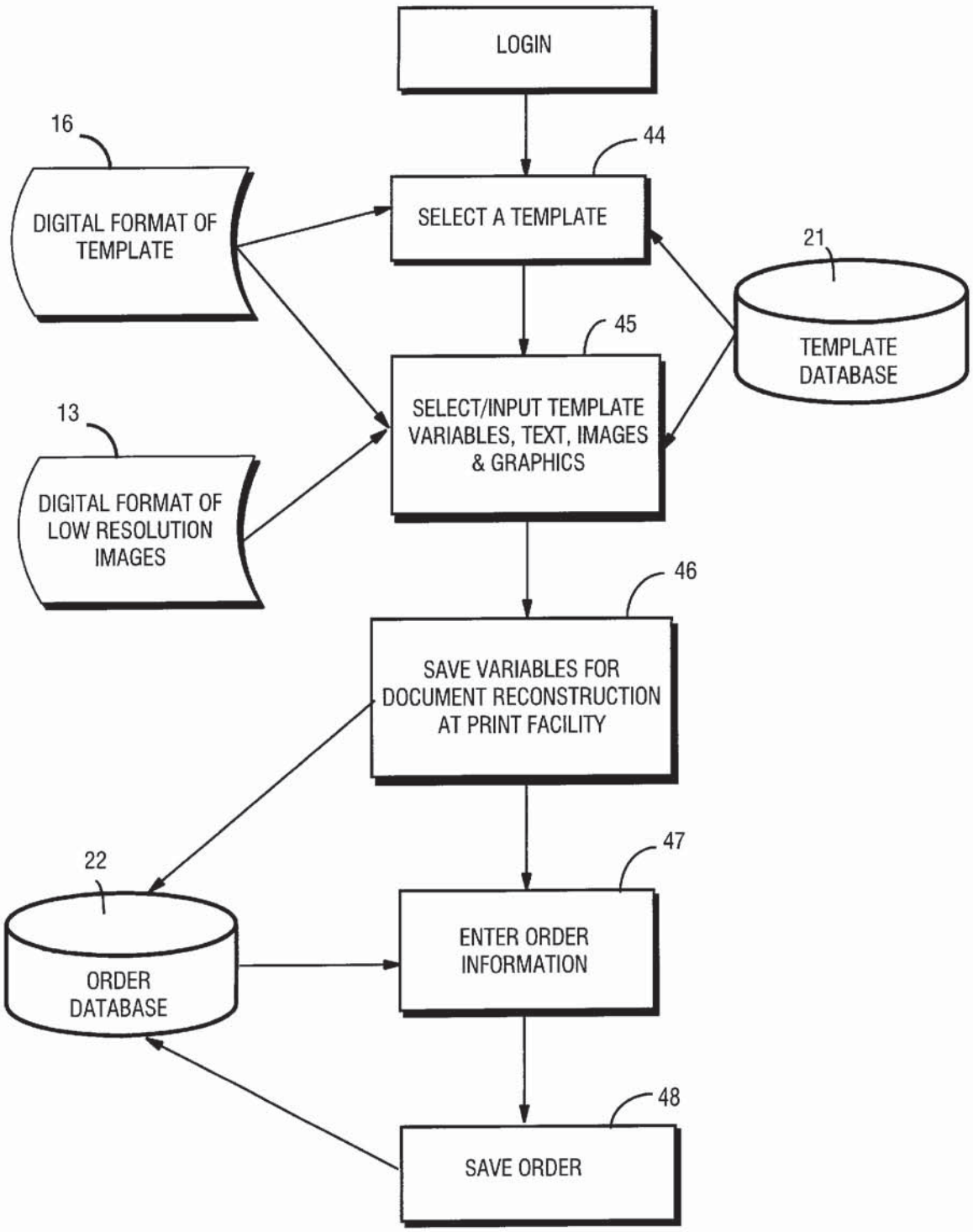
LOGIN
16
DIGITAL FORMAT OF TEMPLATE
44
SELECT A TEMPLATE
21
TEMPLATE DATABASE
45
SELECT/INPUT TEMPLATE VARIABLES, TEXT, IMAGES & GRAPHICS
13
DIGITAL FORMAT OF LOW RESOLUTION IMAGES
46
SAVE VARIABLES FOR DOCUMENT RECONSTRUCTION AT PRINT FACILITY
22
ORDER DATABASE
47
ENTER ORDER INFORMATION
48
SAVE ORDER

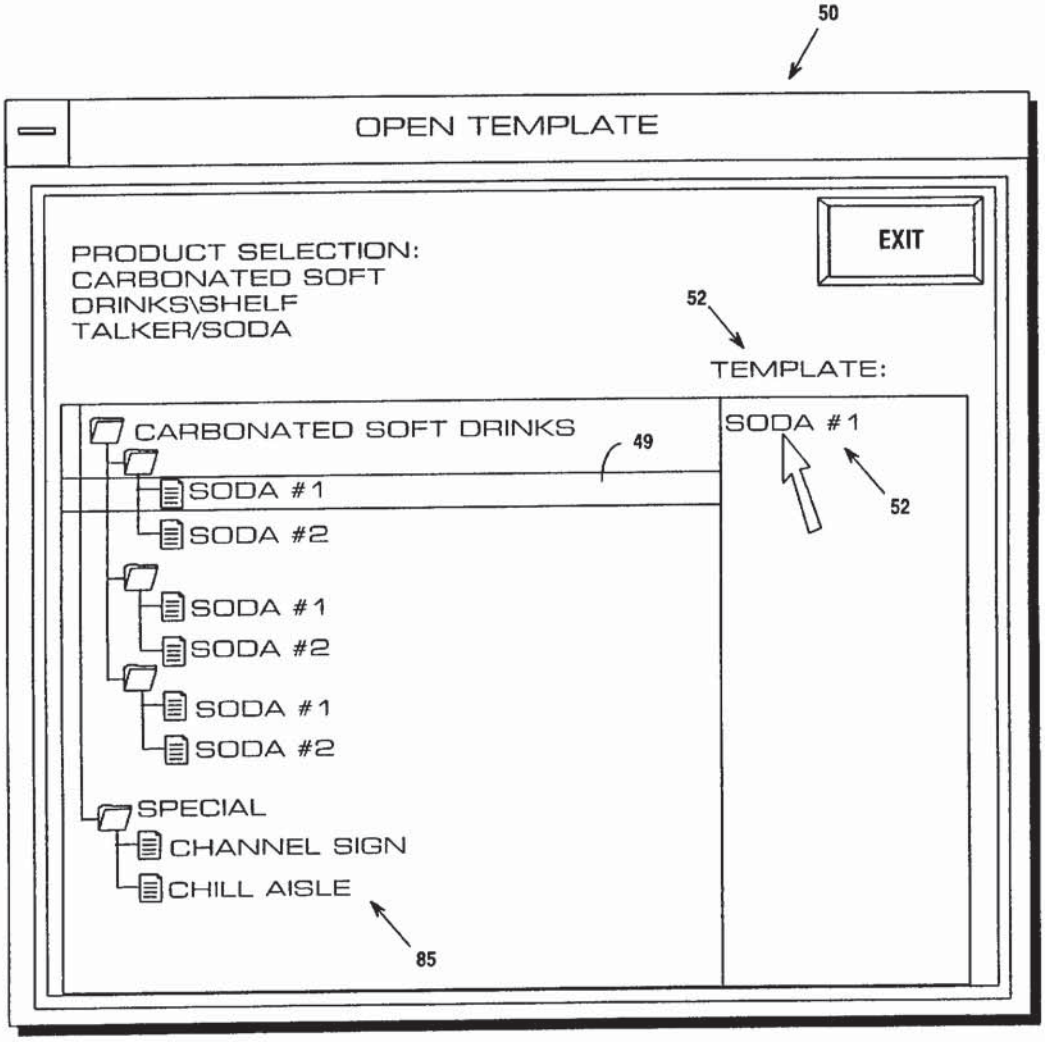
50
OPEN TEMPLATE
EXIT
PRODUCT SELECTION:
CARBONATED SOFT
DRINKS\SHELF
TALKER/SODA
52
TEMPLATE:
CARBONATED SOFT DRINKS
49
SODA #1
SODA #2
SODA #1
SODA #2
SODA #1
SODA #2
SPECIAL
CHANNEL SIGN
CHILL AISLE
85
SODA #1
52

FIG.4

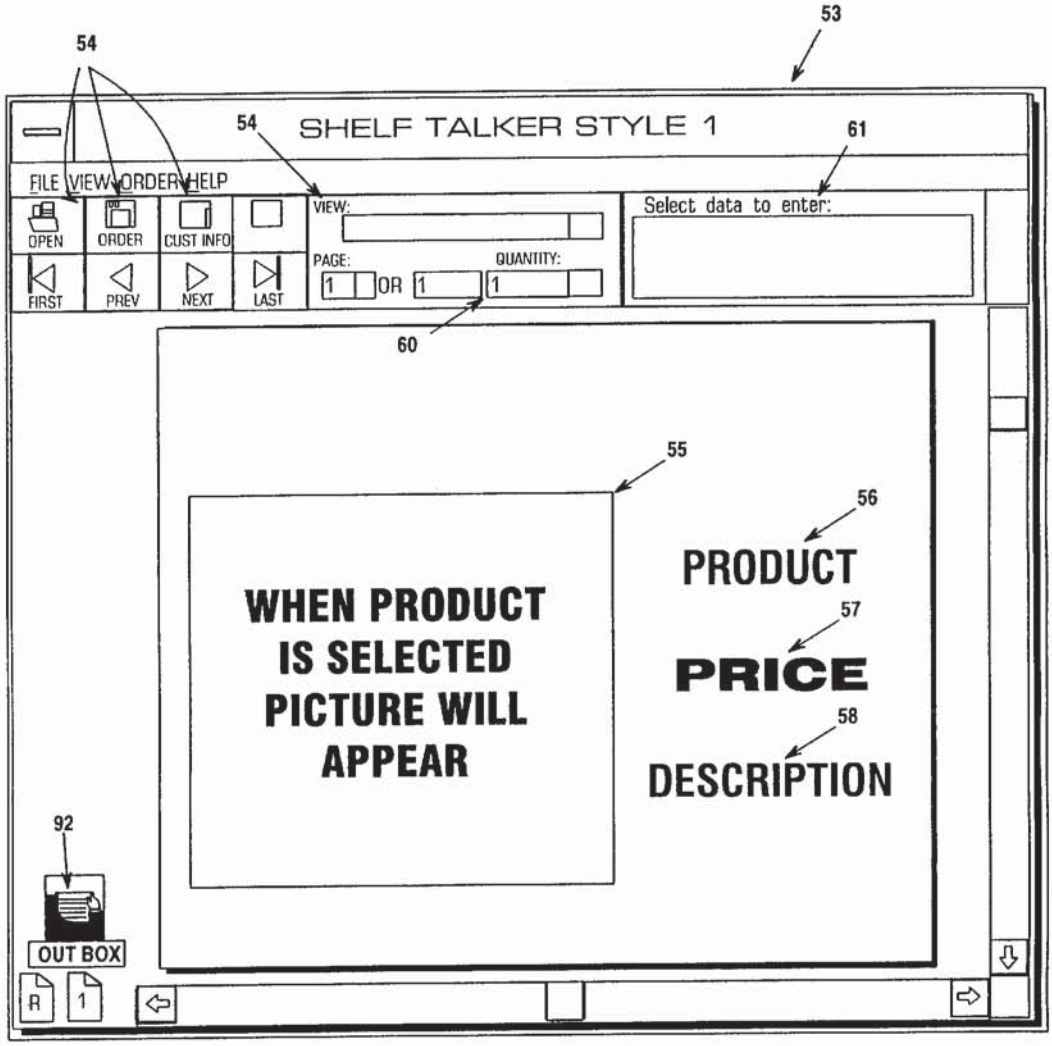
53
54
54
SHELF TALKER STYLE 1
61
FILE VIEW ORDER HELP
OPEN
ORDER
CUST INFO
VIEW:
Select data to enter:
FIRST
PREV
NEXT
LAST
PAGE:
1
OR
1
QUANTITY:
1
60
55
56
PRODUCT
57
PRICE
58
DESCRIPTION
WHEN PRODUCT IS SELECTED PICTURE WILL APPEAR
92
OUT BOX
R
1

FIG.5

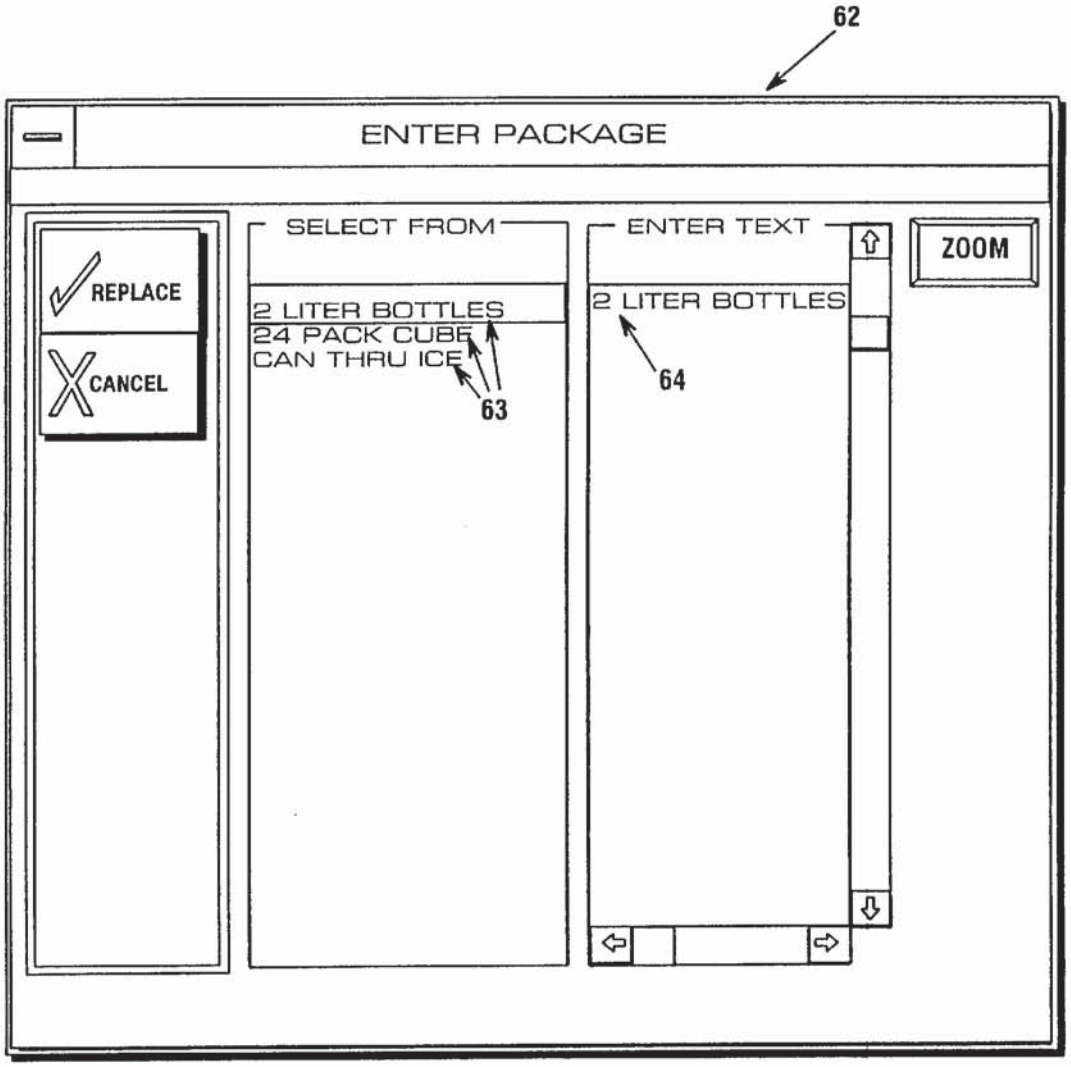
62
ENTER PACKAGE
REPLACE
CANCEL
SELECT FROM
2 LITER BOTTLES
24 PACK CUBE
CAN THRU ICE
63
ENTER TEXT
2 LITER BOTTLES
64
ZOOM

FIG.6

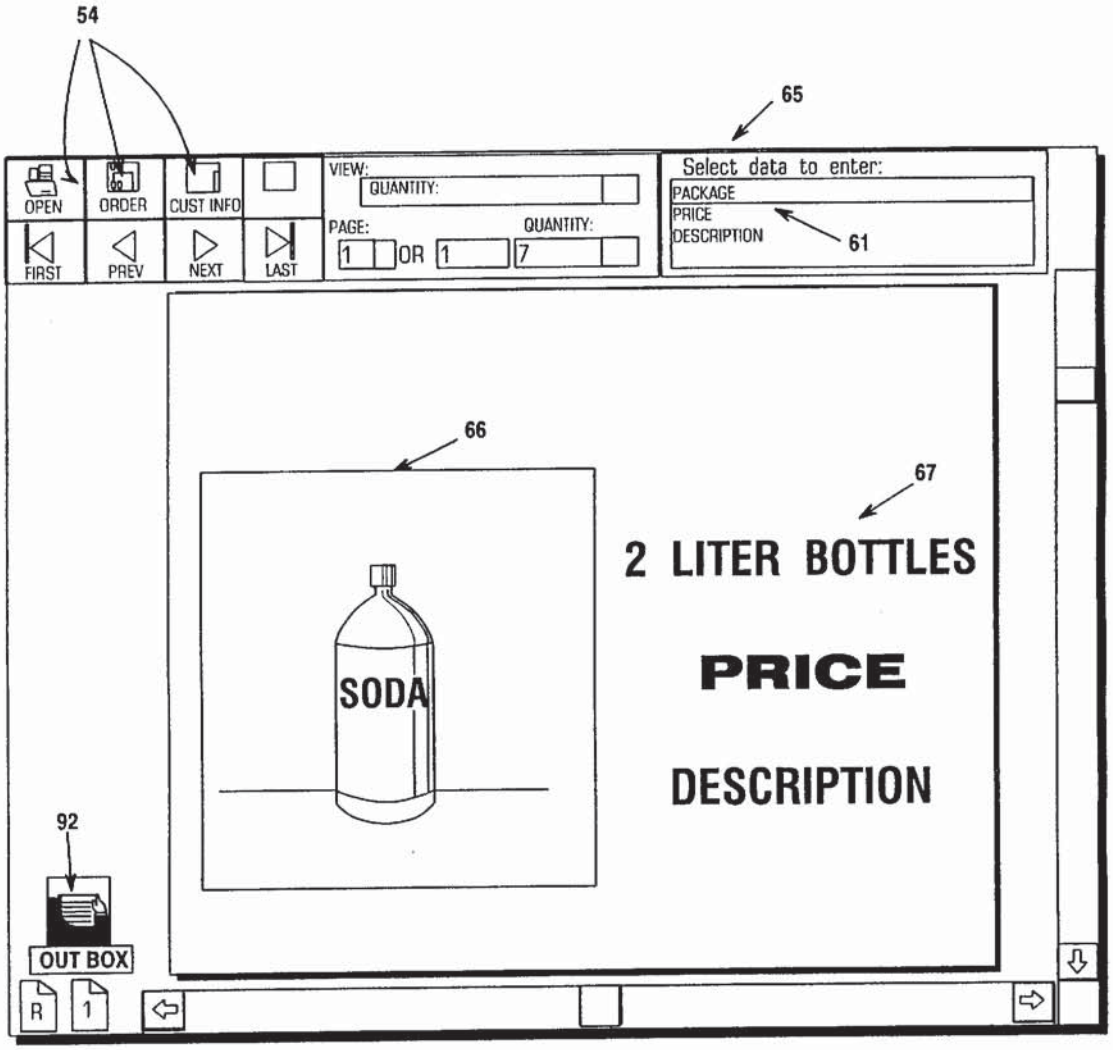
54
65
OPEN
ORDER
CUST INFO
FIRST
PREV
NEXT
LAST
VIEW:
QUANTITY:
PAGE:
1
OR
1
QUANTITY:
7
Select data to enter:
PACKAGE
PRICE
DESCRIPTION
61
66
67
SODA
2 LITER BOTTLES
PRICE
DESCRIPTION
92
OUT BOX
R
1

FIG.7

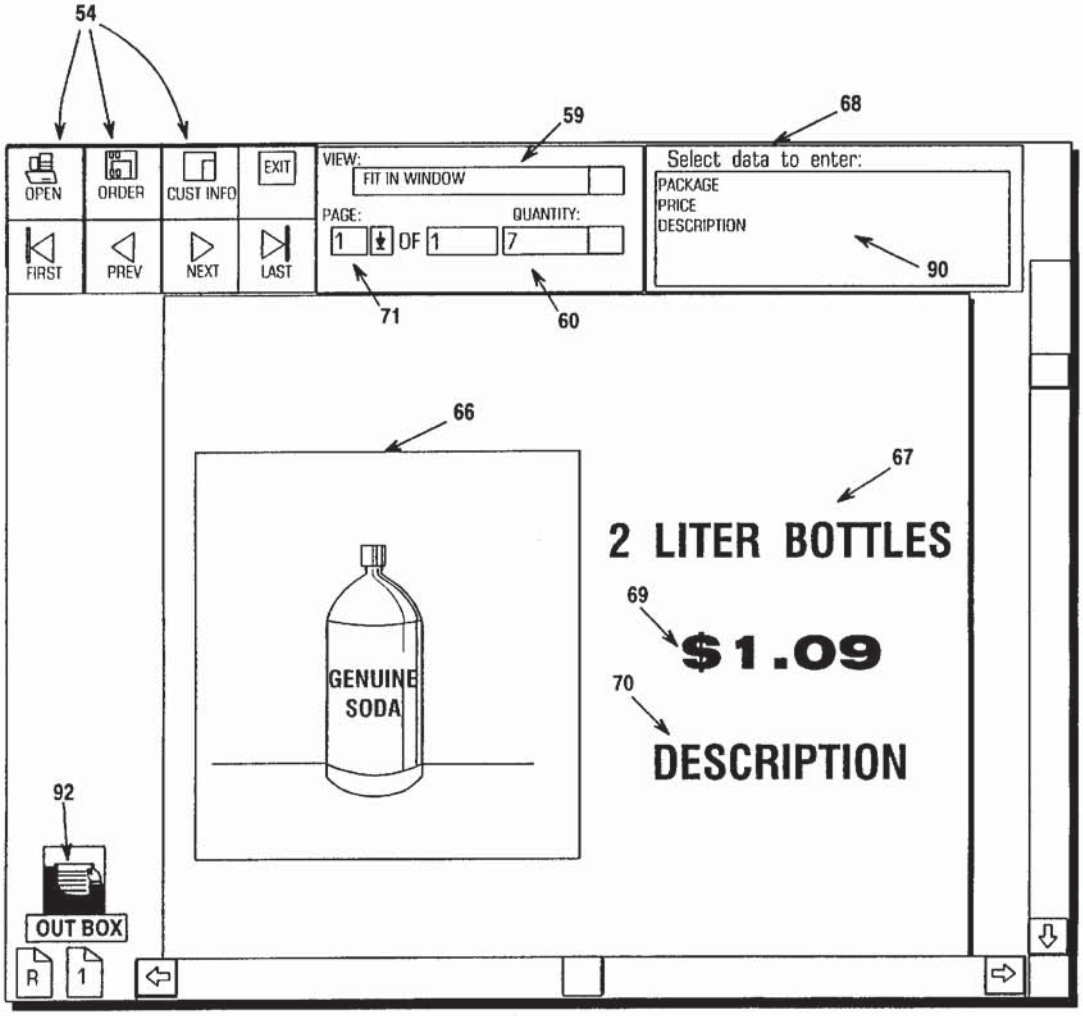
54
59
68
OPEN
ORDER
CUST INFO
EXIT
VIEW:
FIT IN WINDOW
Select data to enter:
PACKAGE
PRICE
DESCRIPTION
PAGE:
1
OF
1
QUANTITY:
7
FIRST
PREV
NEXT
LAST
90
71
60
66
67
2 LITER BOTTLES
69
$1.09
70
DESCRIPTION
GENUINE
SODA
92
OUT BOX
R
1

FIG.8

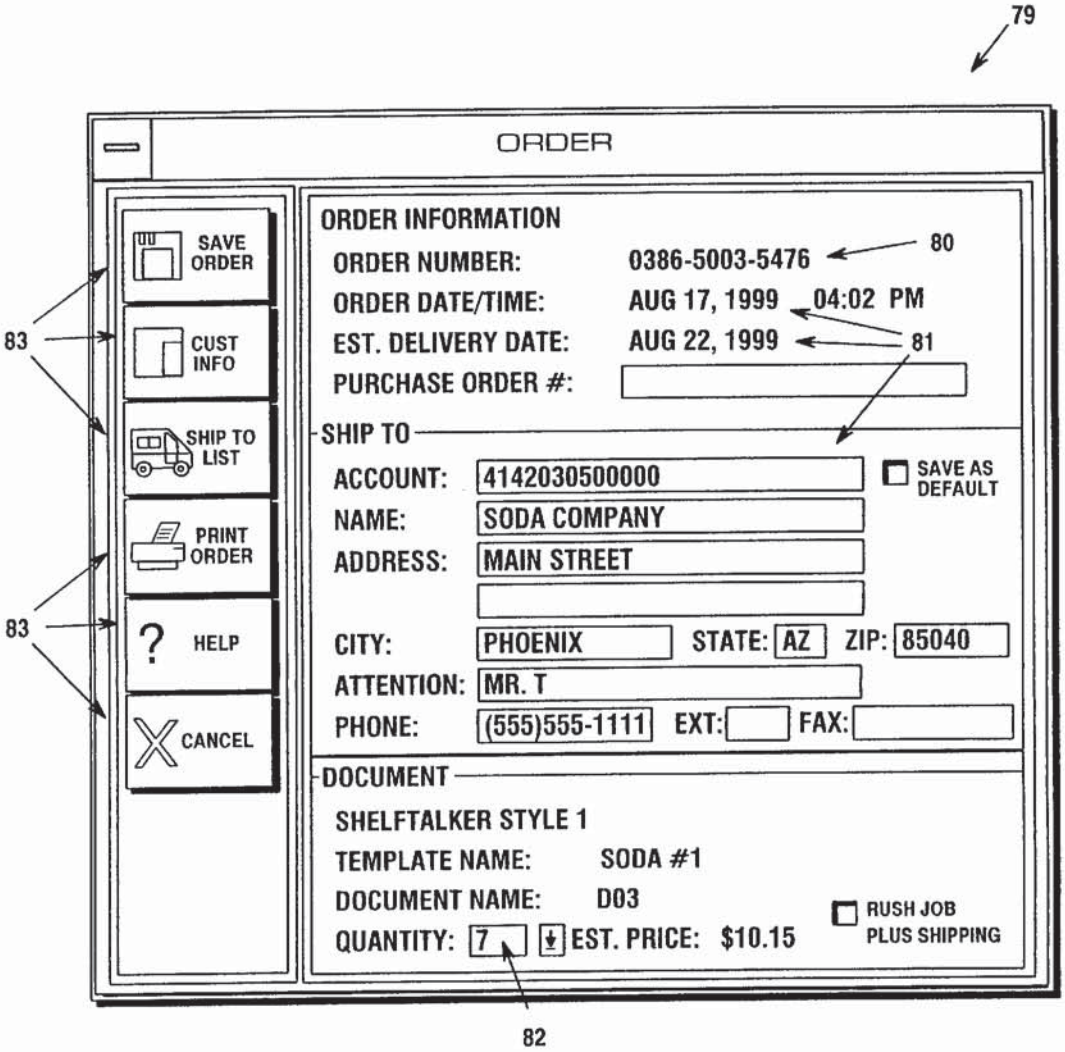
79
ORDER
SAVE ORDER
CUST INFO
SHIP TO LIST
PRINT ORDER
HELP
CANCEL
83
83
ORDER INFORMATION
ORDER NUMBER: 0386-5003-5476
80
ORDER DATE/TIME: AUG 17, 1999 04:02 PM
EST. DELIVERY DATE: AUG 22, 1999
81
PURCHASE ORDER #:
SHIP TO
ACCOUNT: 4142030500000
SAVE AS DEFAULT
NAME: SODA COMPANY
ADDRESS: MAIN STREET
CITY: PHOENIX
STATE: AZ
ZIP: 85040
ATTENTION: MR. T
PHONE: (555)555-1111
EXT:
FAX:
DOCUMENT
SHELFTALKER STYLE 1
TEMPLATE NAME: SODA #1
DOCUMENT NAME: D03
QUANTITY: 7
EST. PRICE: $10.15
RUSH JOB PLUS SHIPPING
82

FIG.9

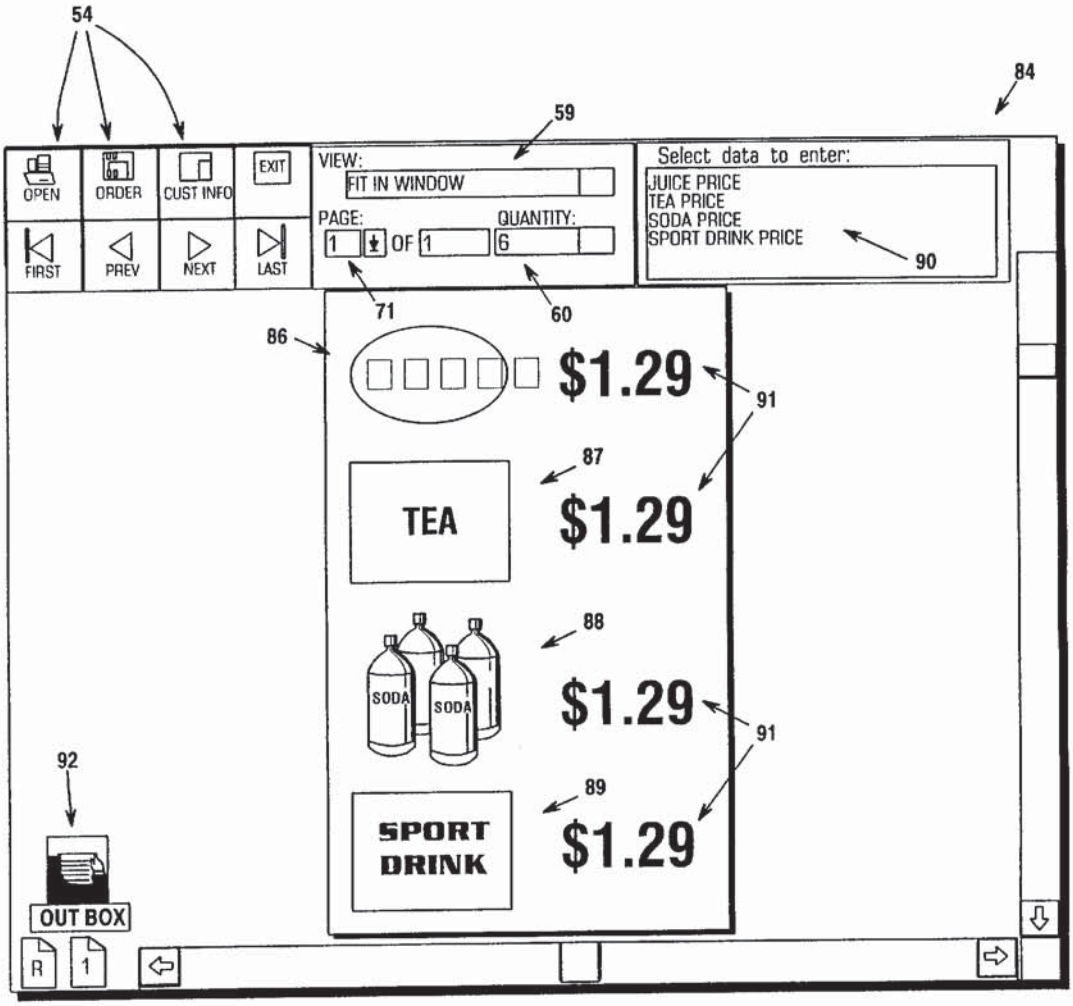
54
84
59
OPEN
ORDER
CUST INFO
EXIT
VIEW:
FIT IN WINDOW
Select data to enter:
JUICE PRICE
TEA PRICE
SODA PRICE
SPORT DRINK PRICE
90
FIRST
PREV
NEXT
LAST
PAGE:
1
OF
1
QUANTITY:
6
71
60
86
$1.29
91
87
TEA
$1.29
88
SODA
SODA
$1.29
91
92
89
SPORT DRINK
$1.29
OUT BOX
R
1

FIG.10

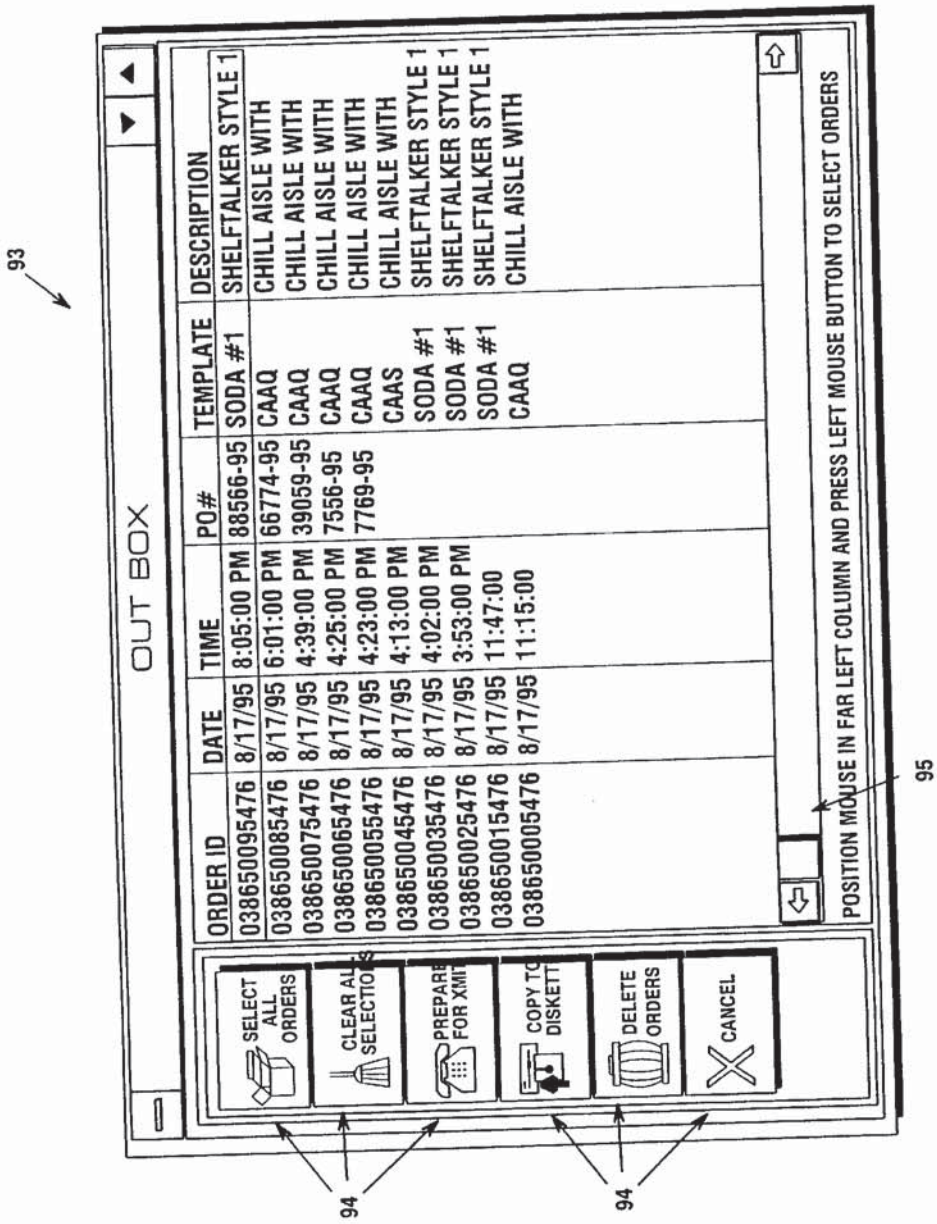
93
OUT BOX
SELECT ALL ORDERS
CLEAR ALL SELECTIONS
PREPARE FOR XMIT
COPY TO DISKETTE
DELETE ORDERS
CANCEL
ORDER ID | DATE | TIME | PO# | TEMPLATE | DESCRIPTION
03865009547 6 | 8/17/95 | 8:05:00 PM | 88566-95 | SODA #1 | SHELFTALKER STYLE 1
03865008547 6 | 8/17/95 | 6:01:00 PM | 66774-95 | CAAQ | CHILL AISLE WITH
03865007547 6 | 8/17/95 | 4:39:00 PM | 39059-95 | CAAQ | CHILL AISLE WITH
03865006547 6 | 8/17/95 | 4:25:00 PM | 7556-95 | CAAQ | CHILL AISLE WITH
03865005547 6 | 8/17/95 | 4:23:00 PM | 7769-95 | CAAQ | CHILL AISLE WITH
03865004547 6 | 8/17/95 | 4:13:00 PM | | CAAS | CHILL AISLE WITH
03865003547 6 | 8/17/95 | 4:02:00 PM | | SODA #1 | SHELFTALKER STYLE 1
03865002547 6 | 8/17/95 | 3:53:00 PM | | SODA #1 | SHELFTALKER STYLE 1
03865001547 6 | 8/17/95 | 11:47:00 | | SODA #1 | SHELFTALKER STYLE 1
03865000547 6 | 8/17/95 | 11:15:00 | | CAAQ | CHILL AISLE WITH
POSITION MOUSE IN FAR LEFT COLUMN AND PRESS LEFT MOUSE BUTTON TO SELECT ORDERS
94
94
95

FIG.11

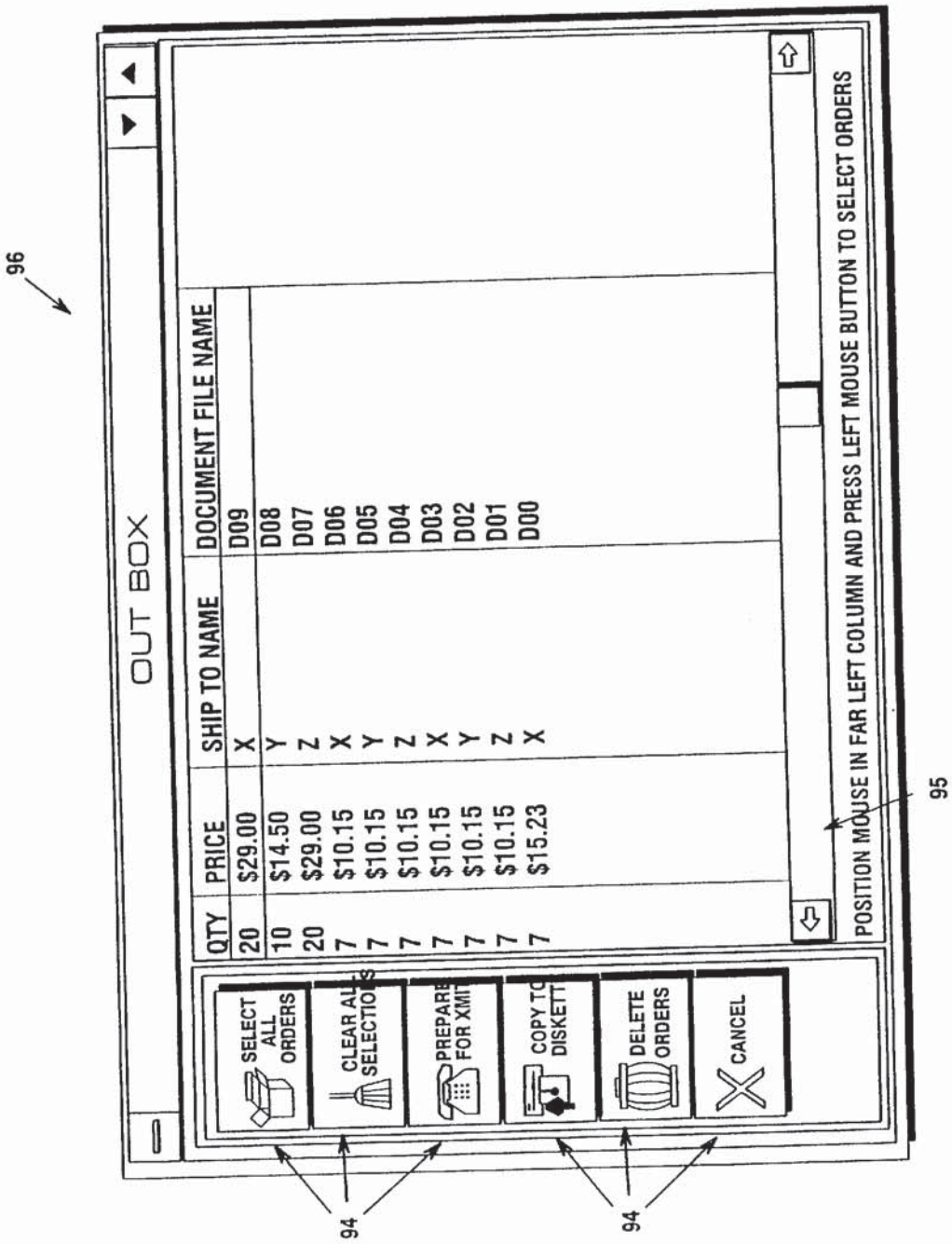
96
OUT BOX
QTY
PRICE
SHIP TO NAME
DOCUMENT FILE NAME
20 $29.00 X D09
10 $14.50 Y D08
20 $29.00 Z D07
7 $10.15 X D06
7 $10.15 Y D05
7 $10.15 Z D04
7 $10.15 X D03
7 $10.15 Y D02
7 $10.15 Z D01
7 $15.23 X D00
SELECT ALL ORDERS
CLEAR ALL SELECTIONS
PREPARE FOR XMIT
COPY TO DISKETTE
DELETE ORDERS
CANCEL
94
94
95
POSITION MOUSE IN FAR LEFT COLUMN AND PRESS LEFT MOUSE BUTTON TO SELECT ORDERS

FIG.12

FIG.13

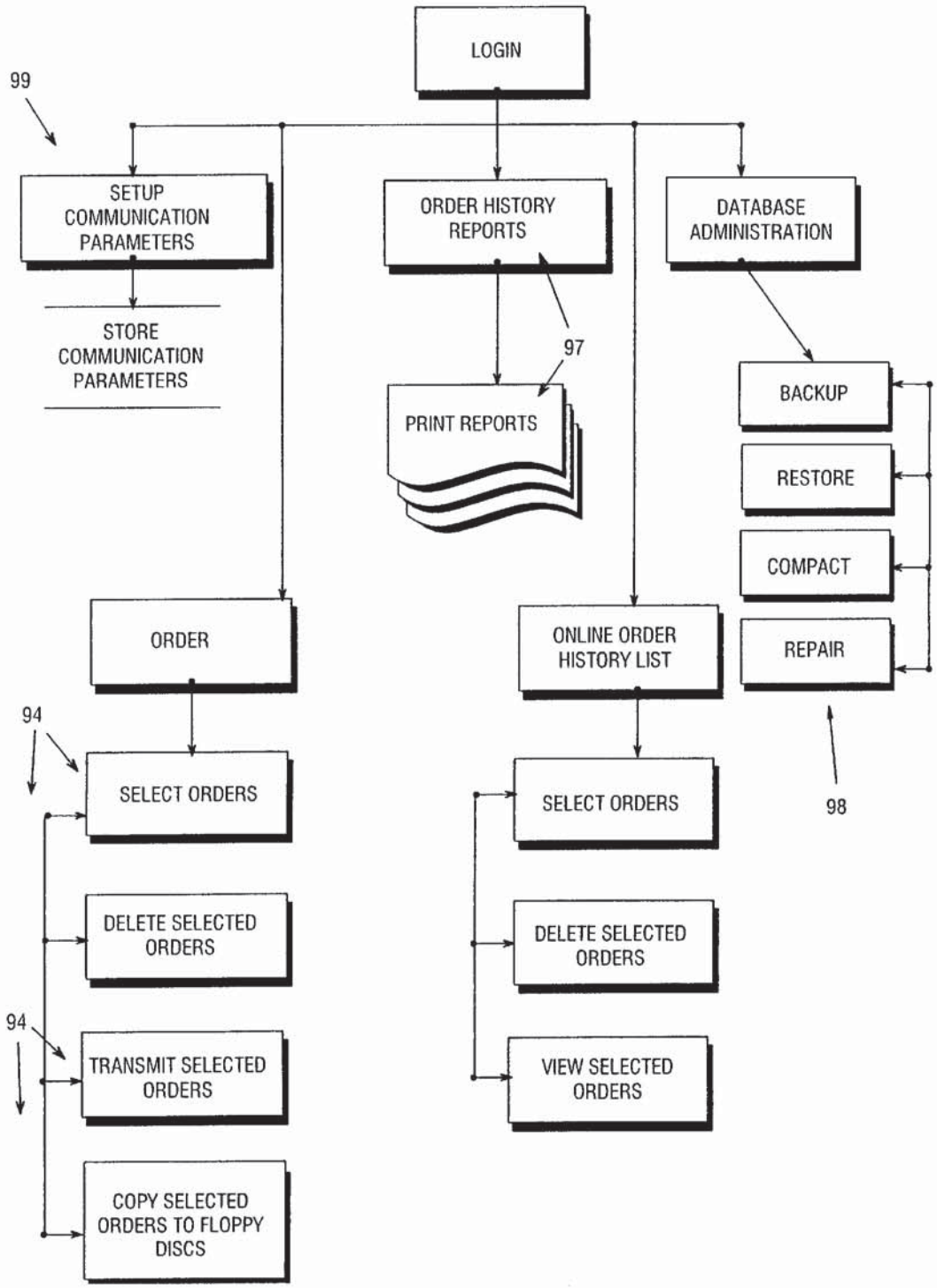
LOGIN
99
SETUP COMMUNICATION PARAMETERS
STORE COMMUNICATION PARAMETERS
ORDER HISTORY REPORTS
97
PRINT REPORTS
DATABASE ADMINISTRATION
BACKUP
RESTORE
COMPACT
REPAIR
98
ORDER
94
SELECT ORDERS
DELETE SELECTED ORDERS
94
TRANSMIT SELECTED ORDERS
COPY SELECTED ORDERS TO FLOPPY DISCS
ONLINE ORDER HISTORY LIST
SELECT ORDERS
DELETE SELECTED ORDERS
VIEW SELECTED ORDERS

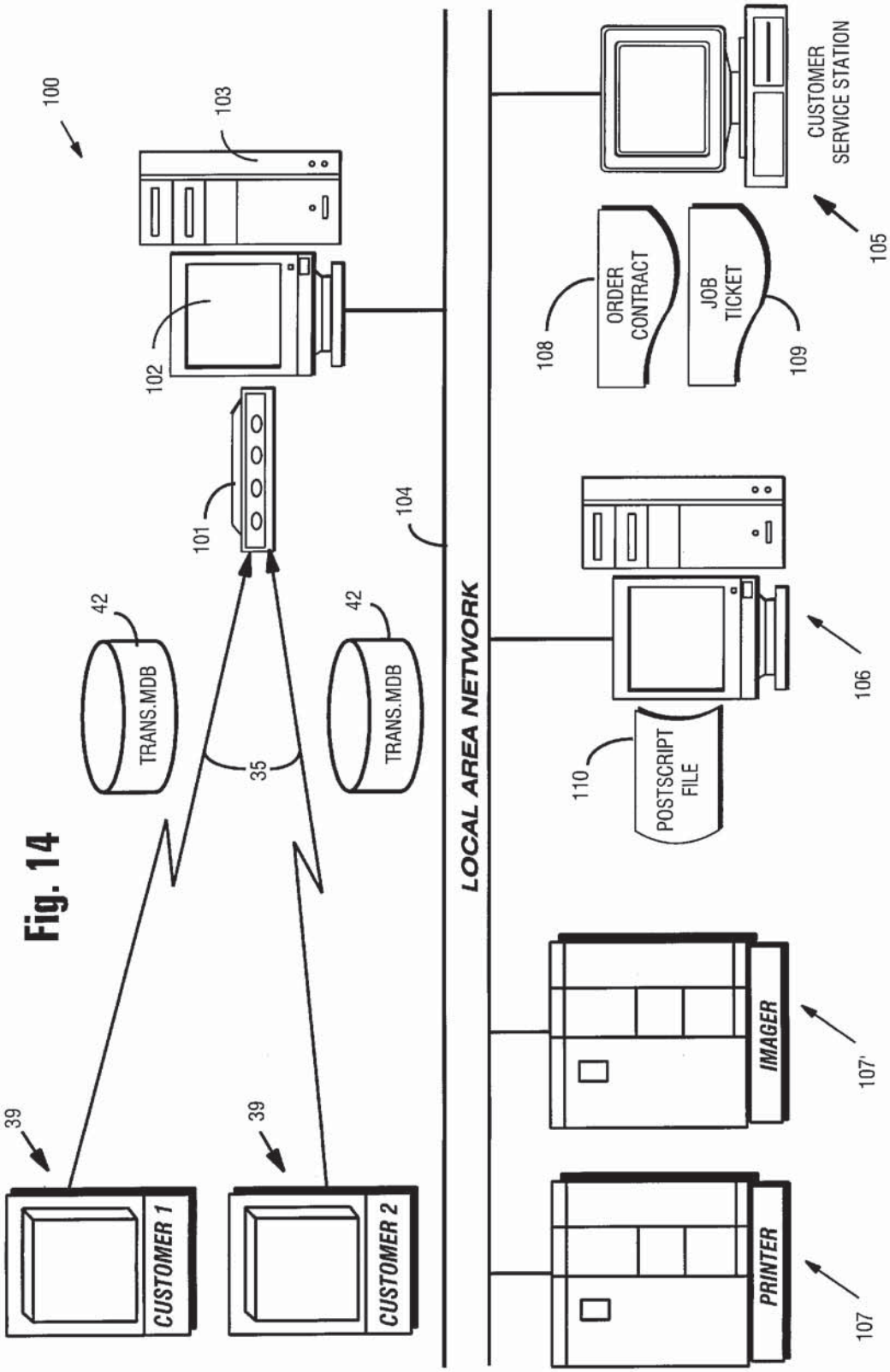
100
103
102
101
104
42
TRANS.MDB
42
TRANS.MDB
35
39
CUSTOMER 1
39
CUSTOMER 2
LOCAL AREA NETWORK
CUSTOMER SERVICE STATION
105
ORDER CONTRACT
108
JOB TICKET
109
106
POSTSCRIPT FILE
110
IMAGER
107'
PRINTER
107

Fig. 14

Fig. 15

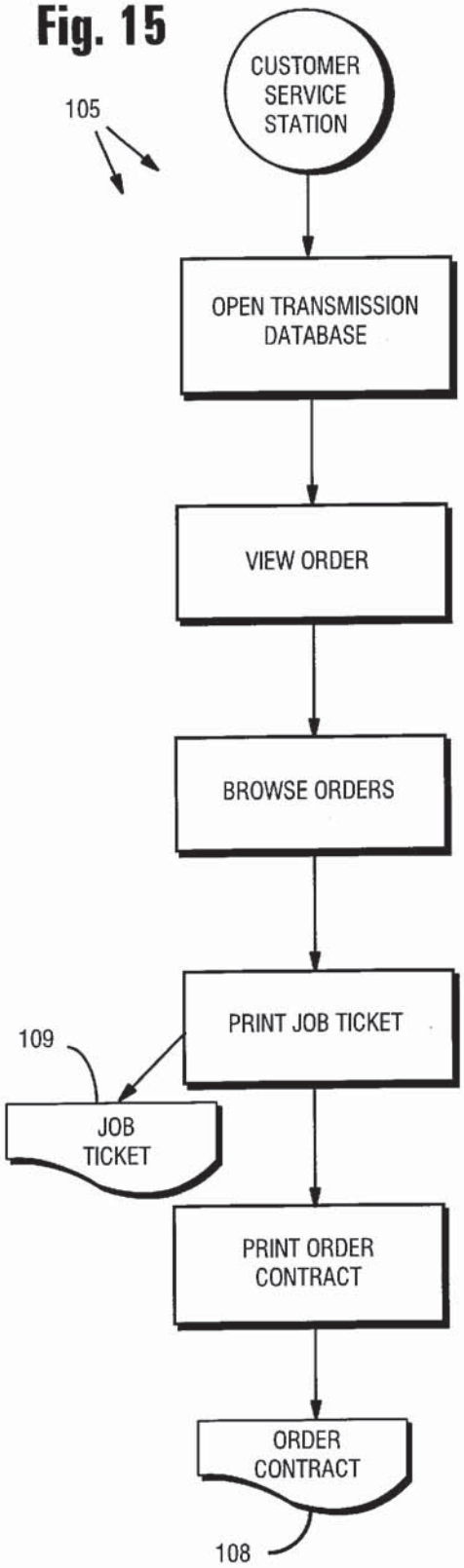
105
CUSTOMER SERVICE STATION
OPEN TRANSMISSION DATABASE
VIEW ORDER
BROWSE ORDERS
PRINT JOB TICKET
109
JOB TICKET
PRINT ORDER CONTRACT
ORDER CONTRACT
108

Fig. 16

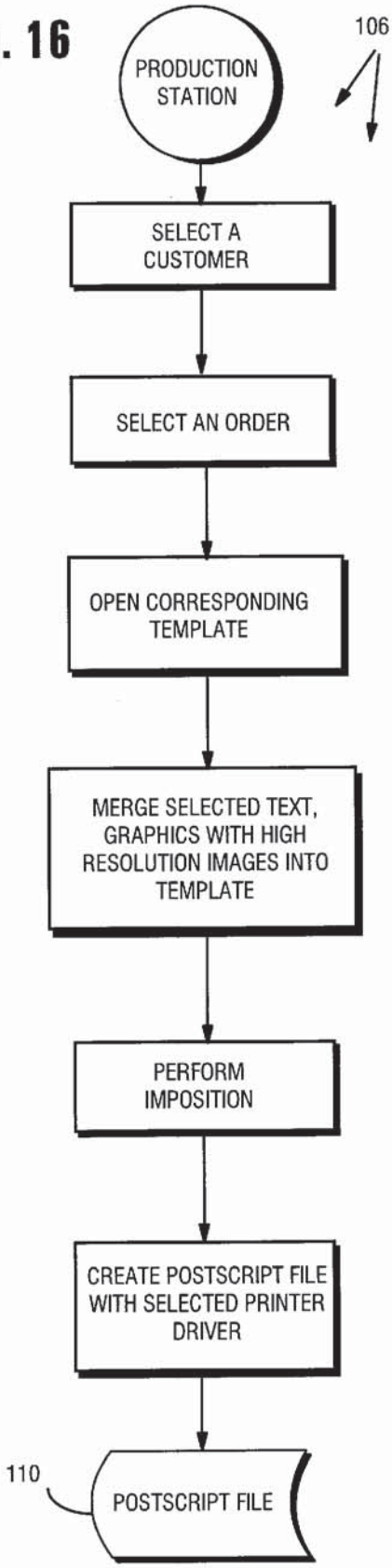
106
PRODUCTION STATION
SELECT A CUSTOMER
SELECT AN ORDER
OPEN CORRESPONDING TEMPLATE
MERGE SELECTED TEXT, GRAPHICS WITH HIGH RESOLUTION IMAGES INTO TEMPLATE
PERFORM IMPOSITION
CREATE POSTSCRIPT FILE WITH SELECTED PRINTER DRIVER
110
POSTSCRIPT FILE

Fig. 17

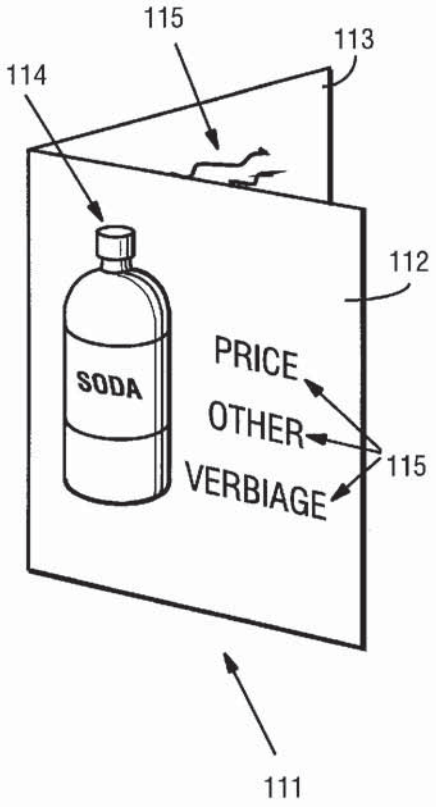
115
113
114
112
SODA
PRICE
OTHER
VERBIAGE
115
111

Fig. 18

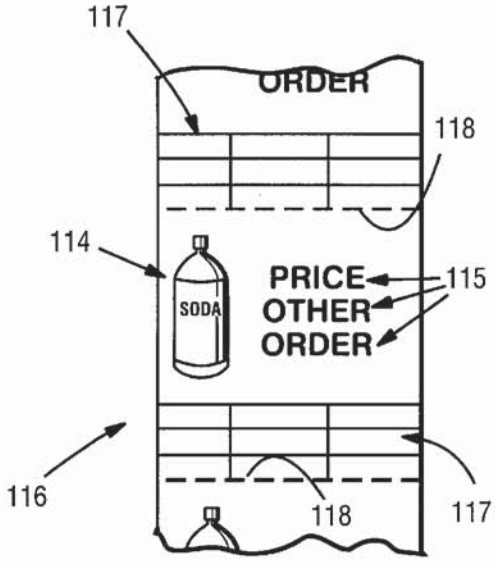
117
ORDER
118
114
SODA
PRICE
OTHER
ORDER
115
116
118
117

DIGITAL DESIGN STATION PROCEDURE

BACKGROUND AND SUMMARY OF THE INVENTION

Normally customized business forms and brochures having high resolution color graphics are produced by individuals with layout experience who compose the basic documents and then ship the final document, with high resolution graphics, to a printing facility where multiple copies of the business form or brochure are imaged either using a printing press, or various types of ion deposition or like non-impact printing techniques. This can be a difficult and time consuming process for the individuals creating the brochures or business forms, there can be significant delays as a result of transmission (typically shipment by courier service) of the documents from the creator to the printing facility, and integration of order information with the documents to be produced at the printing facility is not optimized.

According to the present invention a method of producing customized business forms or brochures having high resolution color graphics is provided which is greatly simplified compared to prior art procedures, both at the user station, and at the printing facility. According to the present invention an end user, without layout experience, by using a plurality of design graphic templates of low resolution can replace text, choose low resolution pictures from the graphic templates, and can quickly create customized, quality documents at the end user's convenience. The documents (customized business forms or brochures) in electronic format may then be readily transported (e.g. electronically over phone lines) to a printing facility where physical documents can be automatically created with quick turn around full process color high resolution printing. According to the present invention the entire work flow process from composition to order entry to production at the printing facility may be automated. Composition and order entry are tightly integrated together and customer information is seamlessly integrated into the production work flow. Documents are automatically recreated at the printing facility without requiring the creator to transmit the final document, high resolution graphics, and templates. Also, automation is provided at the printing facility to provide quick turn around full color process printing.

That is the Digital Design Station (DDS) according to the invention automates the composition and manufacture of corporate and commercial documents. It provides inexperienced users with the is ability to dynamically create and modify templated documents. DDS may be made up of five integrated systems: DDS Setup; DDS User, DDS Administration, DDS Order and DDS Production. DDS works in conjunction with commercially available off the shelf composition software, such as Adobe PageMaker and a relational database.

In the following description of the invention, in the specification and claims, the following definitions are used:

"Generic Template": A general-purpose template for any type of document, such as a business form, brochure, or sign. When the user replaces texts and graphics in a generic template, a customized document is created.

"High resolution" with respect to graphics/images: The fineness or coarseness as digitized, measured as dots-per-inch, always over about 100 dots-per-inch and typically 200–800 dots-per-inch, but dependent somewhat on the print device.

"Imposition": In the graphic arts, laying out pages in a press form or flat so they will be in the correct order after the printed sheet is folded.

"Low resolution" with respect to graphics/images: The fineness or coarseness as digitized, measured as dots-per-inch, always under 90 dots-per-inch and typically about 17 dots-per-inch, but dependent somewhat on the display device.

"Postscript": A software published by Adobe Systems that translates graphics created in a computer to language a (Postscript-compatible) printer can understand.[a page description language] Postscript-compatible printers have interpreters in them that create the proper dot patterns to recreate the screen image—text and graphics—to a page of paper.

"Preflight": The process of gathering all images, fonts and specifications necessary to print any document. This also includes correctly preparing the document for printing.

"Prepress": All printing operations prior to presswork, including design and layout, typesetting/imagesetting, graphic arts photography, color separation, image assembly, and platemaking.

According to one aspect of the present invention a method of producing customized business forms or brochures using a plurality of low resolution graphics templates in electronic form, and a plurality of text templates, using a user station including a video monitor, selection device (such as a keyboard and/or a mouse), and processor (typically in a PC or other computer equipment), is provided. The method comprises the steps of: (a) At the user station using the selection device to control the processor, selecting one or more low resolution graphics templates in electronic form from the plurality of templates, and displaying graphics corresponding to the graphic templates selected on the video monitor. (b) Using the selection device selecting text related to the graphics selected from the text templates, and displaying the text corresponding to the text template or templates selected on the video monitor with the selected graphics to provide a customized business form or brochure in electronic format. (c) Using the selection device and processor electronically saving the customized business form or brochure in electronic format. (d) Transmitting the saved customized business form or brochure in electronic format to a printing installation without transmitting a document, physical graphics, or templates from the user station. And (e) at the printing installation imaging a physical copy (e.g. paper) of the customized business form or brochure in electronic format transmitted in step (d), the customized business form or brochure in physical form having high resolution graphics corresponding to the template graphics selected in step (a).

Step (d) may be practiced by using the selection device to electronically transmit a customized business form or brochure in electronic format, e.g. over phone lines. Alternatively, step (c) may be practiced to save via electronic format onto a disk, and step (d) may be transmitted by physically transmitting the disk which—though it requires a courier services or other some other physical transporting procedure—is still simpler than prior art procedure which requires transmission of high resolution graphics "final" type documents. Other transmitting techniques that are conventional and suitable may also be utilized.

The method typically comprises the further steps, between steps (c) and (d), e.g. at an administration station, of collecting multiple customized business forms or brochures in electronic format from a plurality of different user stations, and assigning identifying indicia to each; and step (d) may be practiced by transmitting all of the collected customized business forms or brochures together (e.g. electronically over phone lines).

The high resolution graphics that are imaged in the practice of step (e) are preferably color, and can be effected utilizing a printing press or various types of non-impact printers, such as ion deposition printers such as Midax®, Xeikon®, or Indigo® imaging equipment.

The text templates may include price templates, and step (b) may be practiced to select at least one price template. Also, preferably at least one of the graphic templates includes multiple and distinct graphic depictions; and step (a) may be practiced to select a graphics template with multiple and distinct graphic depictions, and step (b) may be practiced to select a price template for each of at least two different graphic depictions (and preferably all of the graphic depictions selected).

The customized business form or brochure to be produced may have multiple pages, in which case steps (a) through (c) are practiced for each of a plurality of the multiple pages (possibly all of the pages), and the multiple pages produced are transmitted together in the practice of step (d).

The method may comprise the further step (f) of inputting further, variable, textual data onto the screen during the practice of step (b), the further textual data saved during the practice of step (c) in electronic format as part of the customized business form or brochure. Step (f) may be practiced using a keyboard. The selecting device may be a mouse, and steps (a) through (c) may be practiced using a mouse. Also, especially where step (d) is practiced electronically, step (d) may be initiated by using the mouse.

According to another aspect of the present invention a method of producing customized business forms or brochures is provided comprising the following steps: (a) At the user station using the selection device to control the processor, selecting one or more low resolution graphics templates in electronic form from the plurality of templates, and displaying graphics corresponding to the graphic templates selected on the video monitor, to provide a customized business form or brochure in electronic format. (b) Using the selection device and processor electronically saving the customized business form or brochure in electronic format. (c) Electronically transmitting the saved customized business form or brochure in electronic format over phone lines to a printing installation, without transmitting a document, physical graphics, or templates from the user station. And (d) at the printing installation imaging a physical copy (e.g. paper) of the customized business form or brochure in electronic format transmitted in step (c), the customized business form or brochure in physical form having high resolution color graphics corresponding to the template graphics selected in step (a).

It is the primary object of the present invention to allow the simple yet professional looking creation of customized business forms or brochures at a user location, even by a user without layout experience, using low resolution graphics, and providing transmission of the customized business form or brochure in electronic format from the creator to a printing facility without the necessity of transmitting a final document with high resolution graphics, yet allowing ready production of a final customized business form or brochure in physical (e.g. paper) form at a printing facility, the physical form of the document produced having high resolution color graphics. This and other objects of the invention will become clear from an inspection of the detailed description of the invention and from the appended claims.

BRIEF DESCRIPTION OF THE DRAWINGS

FIG. **1** is a high level flowchart showing the setup of various databases in order to facilitate practice of an exemplary method according to the present invention;

FIG. **2** is a schematic illustration of various equipment that may be used in the practice of the method according to the present invention;

FIG. **3** is a high level schematic showing the creation of a customized business form or brochure at a user location, pursuant to the method of the present invention;

FIGS. **4** through **12** are schematic illustrations of various screens that appear on the video monitor showing exemplary detail during practice of an exemplary method according to the high level flowchart of FIG. **3**, for the production of customized business forms or brochures;

FIG. **13** is a high level flowchart showing administration work flow for the handling of multiple orders for customized business forms or brochures produced according the method of FIGS. **3** through **12**;

FIG. **14** is a schematic illustration of equipment utilized at a manufacturing (printing) facility;

FIGS. **15** and **16** are high level flowcharts showing, respectively, the operation of a customer service station and production station of FIG. **14**; and

FIGS. **17** and **18** are schematic perspective views of exemplary documents that may be produced according to the method of the present invention.

DETAILED DESCRIPTION OF THE DRAWINGS

A significant purpose of the method according to the present invention as illustrated in the drawing figures is to allow an inexperienced end user to create, using low resolution graphics, customized business forms or brochures at a user station on a video monitor, in electronic format, and then to receive such forms or brochures in electronic format at a printing facility without the necessity for the end user to transport physical documents, especially documents with high resolution color graphics, to the printing facility. Yet at the printing facility the forms or brochures may be imaged with high resolution color graphics, while at the same time composition and order entry are tightly integrated together, and automation at the printing facility, and at various other stages, is optimized.

FIG. **1** is a high level schematic representation of a setup work flow. Images and graphics are provided from a source **10** (by skilled, experienced creators) to box **11** where the images and graphics (including photographs) are converted to digital format in the form of high resolution images **12** and low resolution images **13**. Various templates **14** are provided to box **15** where—using suitable conventional composition software—templates are composed, including utilizing the low resolution digital format from **13**. Digital format of the low resolution templates is then formed as indicated at **16** and provided to setup template and order database **17**. Order information from source **18** and customer information from source **19** is also provided to the box **17**, as well as digital format low resolution images information from source **13**. Template variable information from source **20** is also provided to box **17**. The output from box **17** is the template database **21** and order database **22**.

Further illustrated in FIG. **1** is the production of a manufacturing database **23** utilizing print setup information from source **24** which is provided to set up manufacturing database **25** for the creation of the manufacture database **23**. Once the databases **21** through **23**, and the digital format of the template **16** and images **12**, **13** are created then it is possible to practice the method according to the present invention.

In the practice of the invention as indicated by FIG. **1**, an exemplary procedure is as follows:

Step **1**: Create generic templates using commercially available off the shelf composition software, such as Adobe PageMaker (**15**), and save the templates in electronic format (**16**). Each generic template contains specifically defined areas where variable text and graphics can be replaced to customize the document.

Step **2**: Any graphics that will be utilized to create the customized documents are converted to digital format (**11**), in both high (**12**) and low resolutions (**13**). High resolution graphics (**12**) are maintained at the printing facility. Low resolution graphics (**13**) are stored at the end user site.

Step **3**: Define end user requirements, including the following:

Order information, such as ship to, bill to (**18**).

Customer information, such as user log on and tracking information (**19**).

Template variables such as text and graphics that will be used to create customized documents (**20**) for each generic template.

The relationship between each generic template, the template's variables, and associated pop up lists that provide selection options for each variable.

Template tree hierarchy information (see FIG. **4**), which provides the end user with a method of selecting a generic template based on a business category.

Print setup information, such as print device, imposition, and finishing requirements (**24**) for each generic template.

Step **4**: Setup the template database (**17**) to contain the information for each generic template created in step **1**, and all text and graphic variables that can be replaced in the generic template to create customized documents. The resulting template database (**21**) is stored at the end user computer.

Step **5**: Setup the order database (**17**) to contain the information used to create an order, such as ship to, bill to. The resulting order database (**22**) is stored at the end user computer.

Step **6**: Setup the manufacture database (**25**) to contain the relationship between each generic template and printing information for every customer (end user), such as printing device, imposition, and finishing requirement for each generic template. The resulting manufacture database (**23**) is stored at the printing facility.

FIG. **2** illustrates two complementary or alternative user stations **26**, **27** where the actual act of composing a customized business form or brochure, by an end user even without layout experience, is practiced, ultimately for supply to a printing facility shown schematically at **28** in FIG. **2**. The facility **28** will have been supplied with the high resolution graphics from **12**.

The system **26** is a stand alone system, and includes a video monitor **29**, a processor (e.g. in casing **30**), and a selection device such as a keyboard **31** and/or a mouse **32** (the term "mouse" is used to mean all conventional and electronic components for quickly allowing cursoring around a video monitor, such as the monitor **29**, and selection of various "material" thereon, including balls and piezoelectric posts), preferably both the keyboard **31** and mouse **32** being provided. The system **26** also preferably has a modem **33** and is supplied with data from database **34** which includes both of the databases **21** and **22**, from FIG. **1**, as well as transmission protocols and the like data. In this way the selection device **32**, for example, can be used to create a customized business form or brochure in electronic format on the video monitor **29**, save it, and then electronically transmit it over phone lines (shown schematically at **35** in FIG. **2**) or other media to the print facility **28**.

The system **27** is an alternative to, or in addition to, the system **26**. The system **27** includes a user station which is shown in the form of a PC **36** (having a processor), a video monitor **37**, and selection devices **31**, **32**. Connected to the PC **36** is local area network—shown schematically at **38**—another video monitor **2**, processor **30**, and the like. The template database information **21** is provided to the PC **36**, while the order database **22** is connected to the processor **30** for administration purposes, the equipment **29**, **30** associated with the system **27** performing an administration server function.

Also illustrated in FIG. **2**, connected to the local area network, is an administration station shown generally by reference **39**, which may have video monitor **40**, processor **41**, and modem **33**, with transmission database **42** providing protocols and like information for transmission of electronic format information from modem **33** associated with system **39** over phone lines **35**. The systems **27**, **39** are utilized in situations where it is desirable to collect multiple customized business forms or brochures in electronic format from a plurality of different user stations (like station **26**, or like the station having PC **36**) so that identifying indicia may be assigned to each customized business form or brochure of a plurality thereof, and the collected forms/brochures may be transmitted together (e.g. in the same disk, or substantially simultaneously over the phone lines **35**).

While the transmission of information electronically, e.g. over phone lines **35**, as illustrated in FIG. **2** is preferred, under some circumstances the electronic format of the forms/brochures may be saved to disk—as illustrated schematically by the disk **43** in FIG. **2**—which may be then physically transmitted to the printing facility **28**, or other conventional transmission modes may be employed.

FIG. **3** is a high level flowchart illustrating various procedures practiced according to the method of the present invention with data supplied from elements **13**, **16**, **21** and **22** (all created as illustrated in FIG. **1**). As illustrated in FIG. **3** after log on an appropriate low resolution (color or merely black and white) graphics template is selected utilizing the selecting device **31**, **32**, as indicated by box **44**, and then various other textual information (also from templates), variable text, images and graphics from the templates (e.g. **13**), or graphics or text created or inputted right on the monitor **29**, **37**, is provided as illustrated at **45**. Then the customized business form or brochure so created on the monitor **29**, **37** is saved, e.g. utilizing selection device **32**, as indicated at **46**. Order information (such as the number of copies of the brochure, where the brochures are to be shipped) is also entered onto the video monitor **29**, **37** (e.g. utilizing input device **31**) as illustrated schematically at **47** in FIG. **3**, and the order information is saved, e.g. utilizing selection device **32**, as indicated at **48**. After saving the order information, with the customized business form or brochure in digital format, are transmitted together, e.g. over phone lines **35** through modem **33**.

As seen in FIG. **3**, the invention further relates to a GUI application that provides the end user interface between generic templates and customer-defined variable information. It allows a point-and-click selection of text and graphics or direct input of variable information to create the final customized document. Once the document is finalized, the end user places an order. The ordering information along with variable information (selected text and graphics) is saved in the DDS order database file **22**. An exemplary procedure is:

Step **1**: Log in to DDS User

Step **2**: Select a generic template from template hierarchy (**44**). The template hierarchy information is stored in the template database (**21**). The selected generic template (**16**) will be displayed with low resolution graphics using commercially available of the shelf composition software, such as Adobe PageMaker. [FIG. **4** shows an example of a template hierarchy.]

Step **3**: Based on the selected generic template, a list of template variables is provided (**61**). The end user selects one template variable (**61**) and is presented with a pop up list of associated options. For example, if the "Product" template variable is selected, the "Enter Product" pop up list (FIG. **6**) provides the options (FIG. **6**, **63**). When the end user selects an option, it is replaced in the specified area of the generic template using commercially available off the shelf composition software. An additional feature of DDS is the ability to group multiple replaceable items with one selected template variable. To expand upon this concept, in the prior example when the "Product" template variable is selected, it could actually replace a "Product" (FIG. **5**, box **56**), as well as the "Product Picture" (FIG. **5**, box **55**). Therefore, with one selection, the end user has customized two areas of the generic template.

Step **4**: Save the selected template variables (**46**) to the order database (**22**) for recreating the customized document at the printing facility. The generic template does not change and the customized document is not saved. At the printing facility, DDS Production merges the saved selected template variables into the associated generic template to recreate the customized document (FIG. **16**).

Step **5**: Enter order information, such as quantity, purchase order number, ship to, and bill to (**47**).

Step **6**: Save the order information (**48**) to the order database.

Once all the orders are completed, it is the responsibility of the end user with administrative privileges to transmit the orders to the printing facility.

FIGS. **4** through **12** illustrate various screens that may appear on the monitors **29**, **37**, **40**. FIGS. **4** through **12** are exemplary only and may vary widely depending upon the particular goods or services to which the customized business forms or brochures to be created relate, and are only some of the most significant screens. A wide variety of other standard-type log on, lead in, transmit, or variable screens also are typically provided. FIGS. **4** through **12** are schematically illustrated with respect to the production of customized business forms or brochures relating to soft drinks, but are clearly representative only, again virtually any product or service being utilizable in the practice of the method of the present invention, for the production of forms/brochures.

FIG. **4** relates to an "open template" screen **50** in which the low resolution graphics from the templates are to be selected. Using the selection device **32** a particular product category, from a number of different levels of product categories, is selected, such as the "soda #1" category **49** illustrated on the open template screen **50** of FIG. **4**. The product category **49** is selected by clicking on it once highlighted, utilizing mouse **32**, which then illustrates a particular template, under template heading **51**, selected, namely the template **52**. Other templates may also be provided under the category **51** by clicking thereon, as illustrated at **49** for the template **52**. Once the desired template **52** (or plurality of templates) is provided under heading **51**, then to provide the template on the monitor **29**, **37** one clicks on template **52** representation using the mouse **32**. This produces the screen illustrated at **53** in FIG. **5**.

The screen **53** preferably also has various options displayed thereon, as illustrated schematically at **54**, which are preferably illustrated in a "Windows"® format, although other formats may also be utilized. Also in this particular case on the video monitor **29**, **37** screen **53** will appear an area **55** reserved for graphics, as well as a plurality of other areas such as the areas **56**, **57**, **58** provided for particular textual information. The view size may be selected in the view field **59** using selection device **32**, while the quantity desired may be selected in is the quantity field **60**. Then from the "select data to enter" field **61** the package, price, or description (corresponding to **55**, **56**; **57**; **58** displays, respectively) are selected, e.g. utilizing the selecting device **32**, preferably the "package" item from field **61** being selected first.

Screen **62** of FIG. **6** is a schematic representation of an exemplary screen that may be provided when the "package" item in field **61** (from screen **53**) is clicked on, illustrating three different graphic templates **63** that may be selected. Again utilizing selecting device **32** one of the potential templates **63** (any number of templates may be provided) of low resolution graphics may be selected, or a plurality may be selected, merely by clicking on using the mouse **32**, the selected low resolution graphics template appearing in the "enter text" field as illustrated at **64** in FIG. **6**. Then by clicking on the textual information **64** in screen **62**—as illustrated by the screen **65** of FIG. **7**—low resolution graphics corresponding to the selected "product", as well as preferably textual information associated therewith, will appear (in either black and white or color) at what were the areas **55**, **56** in FIG. **5**, as illustrated by the graphics **66** and associated textual information **67**, in FIG. **7**.

The business form/brochure is further created by clicking on the "price" and "description" items in field **61**. When each of the items "price" "description" appear on a separate screen a number of textual templates are illustrated from which to select (e.g. prices ranging from 79 cents to $2.39 under the "price" selection), and all sorts of descriptive textual templates (such as "bottle", "enter to win", "ice cold", "managers special" and the like) being displayed on the monitor **29**, **37** (in either black and white or color) when the "description" item in field **61** is selected.

FIG. **8** shows an exemplary final screen **68** like the screen **65** only with a numerical price **69** being provided where the area **57** was for screen **53** of FIG. **5**, and the descriptive text **70** being provided where the item **58** was provided in FIG. **5**. If desired, utilizing the keyboard **31**, other textual information may be provided on the screen **68** as part of the final business form/brochure, and using the input devices or software (compatible with facility **28**) other low resolution graphics may also be input.

If what is provided by screen **68** is only to be one page of a multiple page form/brochure, then the "page" field **71** will be manipulated, and the subsequent pages will be produced in the same manner described above for the first page with respect to FIGS. **4** through **8**. Ultimately when the "final" form/brochure has been created, then one clicks on the order item of the items **54** again using selection device **32**, and the screen **79** of FIG. **9** is then displayed.

On screen **79**, which is the "order" screen, order number **80** automatically assigned by processor **30**, **36** or **41**. All the other necessary fields **81** (not all of the fields provided may be necessary ones) are filled in preferably utilizing the selection device **31**, with the quantity information at **82** automatically transferring from the field **60** of the screen **68**, but being adjustable on the screen **79** again using the mouse **32**. The name of the template which was used to create the

form/brochure is preferably also displayed as illustrated in FIG. **9**, and there are various other button options **83** provided on the screen **79**. Typically the button **83** relating to "save order" will be selected utilizing the mouse **32**, and the form/brochure in electronic format will be saved for ultimate transmission to the print facility **28**.

FIG. **10** schematically illustrates another exemplary screen **84** that is displayed, for example, when the item **85** from the templates available "open template" screen **50** of FIG. **4** is selected. In this case multiple and distinct graphics (including photos) depictions **86–89** are provided, and a price for each may be selected, e.g. by clicking on the appropriate data item found in the field **90** to change the price items **91** associated with the graphics **86–89**, respectively, individually. Price items **91** again preferably are displayed on subsequent screens as possible textual templates, the appropriate textual template being selected and entered and then appearing on the screen **84** in the appropriate place **91**.

While only two exemplary types of forms/brochures are illustrated in FIGS. **8** and **10**, it should be understood that an almost infinite number of different forms/brochures are possible depending upon the number of graphics templates, textual templates, and the like.

Once all of the appropriate forms/brochures and/or pages have been composed, the "outbox icon" **92** (see FIGS. **5**, **7**, and **10**) is selected (e.g. by double clicking with mouse **32**) to provide the screen **93** illustrated in FIG. **11**. Once the screen **93** is reached any of the options/buttons **94** may be exercised, allowing all of the orders to be chosen, individual orders chosen, or the like, by clicking on utilizing the mouse **32**. If it is desired to see more information about any one of the orders in a row on the screen **93**, by using the scroll bar **95** on the bottom of the screen **93** more information will be displayed. For example, screen **96** of FIG. **12** may then be provided. From either screen **95** or **96** once the proper selections or confirmation has been made the buttons **94** that are appropriate can be selected to prepare is for transmitting (e.g., over phone lines **35**) all of the orders displayed on the screens **93**, **96**, or all of the orders may be copied to a disk, and after the orders are properly handled the cancel button of the selections **94** may be clicked on to return to the screen of FIG. **4** (or to an earlier log on or general information screen).

FIG. **13** is the high level flowchart indicating the type of other information that may be provided at the station **39** which collects data from all of the individual user stations, e.g. connected to the local area network **38**, for common transmission along phone lines **35**. In addition to the collection and transmission functions station **39** may also allow for the collection of data to generate the reports as illustrated schematically at **97** in FIG. **13**, or to provide various other functions as illustrated schematically at **98** in FIG. **13**, the setup communication parameters as illustrated schematically at **99** in FIGS. **13**, or the like.

The DDS Administration of FIG. **13** further illustrates an exemplary GUI application that provides the end user with administrative privileges the ability to transmit orders to the printing facility, maintain order history, and perform database administration activities. The following exemplary procedure may be followed:

Step **1**: Log in to DDS Administration. Only end users with administrative privileges will have access to this application.

Step **2**: Set up and save communication parameters (**99**), such as modem type, file transfer protocol, and baud rate.

Step **3**: Select orders (**94**) from the order database for transmission using a modem. The selected orders will be saved to the DDS Transmission database which is compressed. Then, the application establishes a communication session with an electronic Bulletin Board System (BBS) at the printing facility. The compressed DDS Transmission database is attached to an e-mail message and sent to the printing facility. After successfully transmitting the compressed DDS Transmission database, the transmitted orders are moved to order history.

Step **4**: Alternatively, select orders (**94**) from the order database for transmission using diskette copy. This method is generally used when the communication lines are not available. The selected orders will be saved to the DDS Transmission database which is compressed. The compressed DDS Transmission database is copied to floppy diskette(s) and delivered to the printing facility. After successfully copying the compressed DDS Transmission database to the diskette(s), the copied orders are moved to order history.

Step **5**: If an end user with administrative privileges determines that certain orders were placed in error, those orders can be selected and deleted.

Step **6**: Order history information can be viewed either on line or in printed reports (**97**).

Step **7**: Perform database administration activities (**98**), such as backup, restore, compact and repair the order database and template database.

At the printing facility, DDS Order creates the order contract and job ticket for the printing job (see FIG. **15**).

FIG. **14** schematically illustrates an exemplary print facility **28** station system architecture, e.g. provided with orders from a number of different customer administrations **39**. The system at the print facility **28** schematically illustrated in FIG. **14** typically includes a server station **100**, which includes the modem **101** for receiving the data from the systems **39**, the video monitor **102**, the processor **103**, and selection devices (like the devices **31**, **32** but not shown in FIG. **14** for simplicity). The server system **100** is connected to a local area network **104** which in turn is connected to a customer service station **105**, production station **106**, and various imaging equipment illustrated at **107**, **107'** in FIG. **14**. While FIG. **14** illustrates the imaging equipment as two different imagers or printers **107**, **107'**, it is to be understood that any number of printers or imaging devices may be provided, such as conventional printing presses, or various types of ion deposition non-impact imaging equipment such as sold under the trademarks "Midax"®, "Xeikon"®, "Indigo"®, or the like, capable of printing or imaging high resolution color graphics (including photos).

At the customer service station **105** an order contract **108** and job ticket **109** are produced, which are conventional items that are necessary or desirable in printing facilities **28**, while at the production station **106** a postscript file **110** is produced, as is conventional per se.

FIG. **15** shows a high level flowchart for the customer service station **105** which has self-explanatory boxes illustrating the high level steps in the production of the order contract **108** and job ticket **109** of FIG. **14**.

In the DDS Order exemplary procedure of FIG. **15** a GUI application that provides the interface for Customer Service Representatives at the printing facility to decompress the DDS Transmission database, view the orders, generate order contracts, and issue job tickets for each printing job, is illustrated.

The DDS User and DDS Administrator systems can potentially be installed at many customer sites. Therefore, multiple customers could be sending DDS Transmission databases to the printing facility for production. Each DDS

Transmission database is processed separately. The following exemplary procedure may be followed:

Step **1**: Decompress the DDS Transmission database.

Step **2**: Open the DDS Transmission database.

Step **3**: View the orders

Step **4**: Print job tickets (**109**).

Step **5**: Print Order Contracts (**108**).

FIG. **16** is a high level flowchart showing the individual steps performed in the production of the postscript file **110** of FIG. **14** at the production station **106**, each of the boxes in FIG. **16** also being self explanatory.

In the DDS Production flowchart of FIG. **16** an exemplary GUI application is shown that provides the interface for pre-press personnel at the printing facility to automate pre-press processes including imposition and providing the correct print device for generating the print ready file. This eliminates the preflight process and automatically generates proper imposition for each customized document.

The DDS User and DDS Administrator systems can potentially be installed at many customer sites. Therefore, multiple customers could be sending DDS Transmission databases to the printing facility for production. Each DDS Transmission database is processed separately. The following exemplary procedure may be followed:

Step **1**: Select a customer (end user). The customer (end user) information is stored in the Manufacture database (FIG. **1**, box **23**). The Manufacture database contains the print set up information for multiple customers.

Step **2**: Select a DDS transmission database for the selected customer. The DDS transmission database may contain multiple orders.

Step **3**: Select orders from the selected DDS transmission database.

Step **4**: Apply the template variables for the selected orders and create the customized documents.

DDS Production will automatically open the generic template which corresponds to the selected order. Using commercially available off the shelf composition software, such as Adobe PageMaker, the template variables are replaced in the proper areas of the generic template to create the customized document. During this process, all graphics are high resolution.

Step **5**: Perform imposition which positions the document properly on the page.

Step **6**: Create a print ready file, such as a Postscript file **110**, for each customized document. This file is loaded to the printer for production. After production, the order is shipped to the customer.

Utilizing the imaging equipment **107**, **107'** final documents are produced at the printing facility **28**. For example, the FINAL physical (paper) copy **111** of a brochure that was composed according to FIGS. **4** through **12** is schematically illustrated in FIG. **17**. In this case the brochure **111** being illustrated as a multi-page document with at least the pages **112**, **113** thereof containing different high resolution color graphics **114**, **115** (preferably printed in color, e.g. four color, and the text **115** also possibly printed in color), which are imaged utilizing the equipment **107**, **107'**, with of course related textual information. For example, the page **112** has graphics **114** and textual information **115** that corresponds to screen **68** of FIG. **8**, but of course the graphics **114** are high resolution rather than the low resolution graphics **66** displayed on the screen **68**.

FIG. **18** schematically illustrates a one page business form **116** that may also be produced as described with respect to FIGS. **1** through **16**, with the same high resolution color graphics **114** and textual information **115** as illustrated for the first page **112** of the brochure **111** of FIG. **17** (and again as corresponding to the screen **68** of FIG. **8**). Also, various other images **117** may be printed or imaged on the business form **116**, utilizing the equipment **107**, **107'** if desired to complete the business form **16**, the information **117** being known from general relationships with the customer who transmitted the order, or as a result of specific information transmitted. While the business form **116** illustrated in FIG. **18** is a continuous business form, with perforation lines **118** or other lines of weakness separating individual copies of the forms, single sheet forms may be provided instead.

It will thus be seen that according to the present invention an effective method has been provided for the production of customized business forms or brochures by utilizing low resolution graphic templates, yet the forms/brochures produced being physical (e.g. paper) documents with high resolution color graphics. While the invention has been herein shown and described in what is presently conceived to be the most practical and preferred embodiment thereof, it will be apparent to those of ordinary skill in the art that many modifications may be made thereof which scope is to be accorded the broadest interpretation of the appended claims so as to encompass all equivalent methods and processes.

What is claimed is:

1. A method of producing customized business forms or brochures using a plurality of low resolution graphics templates in electronic form, and a plurality of text templates, using a user station including a video monitor, selection device, and processor, comprising the steps of:

(a) at the user station, using the selection device to control the processor, selecting one or more low resolution graphics templates in electronic form from the plurality of templates, and displaying graphics corresponding to the graphic templates selected on the video monitor;

(b) using the selection device selecting text related to the graphics selected from the text templates, and displaying the text corresponding to the text template or templates selected on the video monitor with the selected graphics to provide a customized business form or brochure in electronic format;

(c) using the selection device and processor electronically saving the customized business form or brochure in electronic format;

(d) transmitting the saved customized business form or brochure in electronic format to a printing installation without transmitting a document, physical graphics, or templates from the user station; and

(e) at the printing installation imaging a physical copy of the customized business form or brochure in electronic format transmitted in step (d), the customized business form or brochure in physical form having high resolution graphics corresponding to the template graphics selected in step (a).

2. A method as recited in claim **1** wherein step (d) is practiced electronically over phone lines.

3. A method as recited in claim **1** comprising the further steps, between steps (c) and (d), of collecting multiple customized business forms or brochures in electronic format from a plurality of different user stations and assigning identifying indicia to each; and wherein step (d) is practiced by transmitting all of the collected customized business forms or brochures together.

4. A method as recited in claim **1** comprising the further step of inputting order information into the video monitor, and transmitting the order information, with the customized business form or brochure in digital format, in the practice of step (d).

5. A method as recited in claim **1** wherein step (c) is practiced to save the electronic format onto a disc, and step (d) is practiced by physically transmitting the disc.

6. A method as recited in claim **5** comprising the further steps, between steps (c) and (d), of collecting multiple customized business forms or brochures in electronic format from a plurality of different user stations and assigning identifying indicia to each; and wherein step (d) is practiced by transmitting all of the collected customized business forms or brochures together.

7. A method as recited in claim **1** wherein step (e) is practiced so as to print the high resolution graphics in color.

8. A method as recited in claim **3** wherein step (e) is practiced so as to print the high resolution graphics in color.

9. A method as recited in claim **7** wherein the text templates include price templates, and wherein step (b) is practiced to select at least one price template.

10. A method as recited in claim **9** wherein at least one of the graphic templates includes multiple and distinct graphic depictions; and wherein step (a) is practiced to select a graphics template with multiple and distinct graphic depictions, and wherein step (b) is practiced to select a price template for each of at least two different graphic depictions.

11. A method as recited in claim **1** wherein the text templates include price templates, and wherein step (b) is practiced to select at least one price template.

12. A method as recited in claim **11** wherein at least one of the graphic templates includes multiple and distinct graphic depictions; and wherein step (a) is practiced to select a graphics template with multiple and distinct graphic depictions, and wherein step (b) is practiced to select a price template for each of at least two different graphic depictions.

13. A method as recited in claim **1** wherein the customized business form or brochure to be produced has multiple pages, and wherein steps (a)–(c) are practiced for each of a plurality of the multiple pages, and the multiple pages produced are transmitted together in the practice of step (d).

14. A method as recited in claim **7** wherein the customized business form or brochure to be produced has multiple pages, and wherein steps (a)–(c) are practiced for each of a plurality of the multiple pages, and the multiple pages produced are transmitted together in the practice of step (d).

15. A method as recited in claim **14** wherein step (d) is practiced electronically over phone lines.

16. A method as recited in claim **1** comprising the further step (f) of inputting further, variable, textual data onto the screen during the practice of step (b), the further textual data saved during the practice of step (c) in electronic format as part of the customized business form or brochure.

17. A method as recited in claim **16** wherein step (f) is practiced using a keyboard.

18. A method as recited in claim **17** wherein the selecting device includes a mouse, and wherein steps (a)–(c) are practiced using the mouse.

19. A method as recited in claim **18** wherein step (d) is practiced electronically and initiated by using the mouse.

20. A method of producing customized business forms or brochures using a plurality of low resolution graphics templates in electronic form at a user station including a video monitor, selection device, and processor, said method comprising the steps of:

(a) at the user station, using the selection device to control the processor, selecting one or more low resolution graphics templates in electronic form from the plurality of templates, and displaying graphics corresponding to the graphic templates selected on the video monitor, to provide a customized business form or brochure in electronic format;

(b) using the selection device and processor electronically saving the customized business form or brochure in electronic format;

(c) electronically transmitting the saved customized business form or brochure in electronic format over phone lines to a printing installation, without transmitting a document, physical graphics, or templates from the user station; and

(d) at the printing installation imaging a physical copy of the customized business form or brochure in electronic format transmitted in step (c), the customized business form or brochure in physical form having high resolution color graphics corresponding to the template graphics selected in step (a).

* * * * *