Ronald J. Schutz (*pro hac vice pending*)
RSchutz@robinskaplan.com
Cyrus A. Morton (*pro hac vice pending*)
CMorton@robinskaplan.com
Benjamen C. Linden (*pro hac vice pending*)
BLinden@robinskaplan.com
ROBINS KAPLAN LLP
800 LaSalle Avenue, Suite 2800
Minneapolis, Minnesota 55402
Tel: (612) 349-8500
Fax: (612) 339-4181

David Martinez (CSB # 193183)
DMartinez@robinskaplan.com
ROBINS KAPLAN LLP
2049 Century Park East, Suite 3400
Los Angeles, CA 90067-3208
Tel: 310-552-0130
Fax: 310-229-5800

Attorneys for Plaintiff
Affinity Labs of Texas, LLC

UNITED STATES DISTRICT COURT
NORTHERN DISTRICT OF CALIFORNIA
OAKLAND DIVISION

AFFINITY LABS OF TEXAS, LLC, Plaintiff, v. BLACKBERRY CORPORATION, BLACKBERRY LIMITED, Defendants.	Case No. 4:18-cv-03194 **COMPLAINT FOR PATENT INFRINGEMENT** **DEMAND FOR JURY TRIAL**

PLAINTIFF'S COMPLAINT FOR PATENT INFRINGEMENT

Plaintiff Affinity Labs of Texas, LLC ("Affinity Labs") for its causes of action against Defendants, BlackBerry Corporation and BlackBerry Limited (collectively, "BlackBerry" and/or "Defendants"), states and alleges on knowledge and information and belief as follows:

PARTIES

1. Plaintiff Affinity Labs is a Texas limited liability company having offices at 31884 RR 12, Dripping Springs, TX 78620.

2. On information and belief, BlackBerry Limited is a Canadian company having its principal place of business at 2200 University Avenue East, Waterloo, Ontario, Canada N2K 0A7.

3. On information and belief, BlackBerry Corporation is a Delaware corporation with its principal place of business at 5000 Riverside Drive, Suite 100E, Irving, TX 75039.

JURISDICTION

4. This Court has subject matter jurisdiction over this action pursuant to 28 U.S.C. §§ 1331 and 1338(a), in that this action arises under the federal patent statutes, 35 U.S.C. §§ 271 and 281-285.

5. This Court has personal jurisdiction over BlackBerry. Upon information and belief, BlackBerry has committed and continues to commit acts giving rise to this action within California and within this judicial district and BlackBerry has established minimum contacts within the forum such that the exercise of jurisdiction over BlackBerry would not offend traditional notions of fair play and substantial justice. For example, BlackBerry has committed and continues to commit acts of infringement in this District, by among other things, offering to sell and selling products that infringe the Asserted Patents, including smartphones. In conducting its business in California and this judicial district, BlackBerry derives substantial revenue from infringing products being sold, used, imported, and/or offered for sale or providing service and support to BlackBerry's customers in California and this District, and will continue to do so unless enjoined by this Court.

VENUE

6. Venue in the Northern District of California is proper pursuant to 28 U.S.C. §§ 1391(b) and (c) and 1400(b) because BlackBerry has committed acts within this judicial district giving rise to this action, BlackBerry has and continues to conduct business in this judicial district, including one or more acts of selling, using, importing, and/or offering for sale infringing

products or providing service and support to BlackBerry's customers in this District. In addition, BlackBerry Corporation has regular and established places of business in this District as evidenced by the website located at the URL https://us.blackberry.com/company/about-us/maps. BlackBerry Limited is not a resident of the United States and therefore may be sued in any judicial district.

7. Venue in this District is also proper because of judicial economy. Judge Gonzalez-Rogers presided over *Affinity Labs of Texas, LLC v. Blackberry Limited, et al.*, Civil Action No. 14-cv-03031; *Affinity Labs of Texas, LLC v. Samsung Electronics Co., Ltd., et al.*, Civil Action No. 14-cv-02717; and *Affinity Labs of Texas, LLC v. Samsung Electronics Co., Ltd., et al.*, Civil Action No. 14-cv-03030. The Asserted Patents were collectively at issue in the three proceedings.

BACKGROUND

Affinity Labs

8. Affinity Labs restates and realleges each of the allegations set forth above and incorporates them herein.

9. Affinity Labs was founded in 2008 by Russell White and Harlie Frost.

10. Russell White is a successful entrepreneur and patent attorney. Mr. White grew up in Houston, Texas, and has an undergraduate degree in mechanical engineering from Texas A&M. Mr. White also graduated from the University of Temple Law School. After earning his law degree, Mr. White co-founded SBC Knowledge Ventures, an entity within AT&T.

11. Mr. White is also a prolific inventor. Mr. White is listed as an inventor on at least twenty-five separate United States patents.

12. On March 28, 2000, Mr. White and Kevin R. Imes filed a detailed patent application, No. 09/537,812 ("the '812 application") with the United States Patent and Trademark Office ("PTO").

13. The '812 application broadly addressed the problem of accessing, managing, and communicating digital audio and video content. In doing so, the '812 application disclosed a number of inventions relating to creating a new media ecosystem with a portable electronic audio device such as an MP3 player or cell phone at its center.

14. The ’812 application also disclosed the ability to download music and playlists from an online store, or stream Internet radio, to the portable electronic device, and then connect the device to a second device such as an automobile with a display. As disclosed in the ’812 application, the music available on the portable device can then be displayed and selected using controls on an automobile stereo system, and played through the speakers.

15. Mr. White and Mr. Imes made this disclosure in the ’812 application over a year before the iPod was released in October 2001, approximately 3 years before the iTunes Store sold its first song, 7 years before the first iPhone was sold, 8 years before the App Store was launched, and 8 years before the functionality of having the music available on a portable device be displayed and selected using controls on an automobile stereo system and played through the speakers was available using an iPhone and some luxury vehicles. This same connective functionality did not become available on Android phones until more than 9 years after Mr. White and Mr. Imes filed the ’812 application.

16. Resulting from the ’812 application, on March 6, 2007, the PTO issued United States Patent No. 7,187,947 entitled “System and Method for Communicating Selected Information to an Electronic Device” (“the ’947 patent”), a copy of which is attached as Exhibit A.

17. On September 21, 2015, an Inter Partes Reexamination Certificate issued for the ’947 patent, cancelling claims 1-42 and issuing new dependent claim 43.

18. On December 15, 2009, the PTO issued United States Patent No. 7,634,228, entitled “Content Delivery System and Method” (“the ’228 patent”), a copy of which is attached as Exhibit B. The ’228 patent was issued from a continuation application claiming priority to the ’812 application.

19. On September 10, 2013, the PTO issued United States Patent No. 8,532,641, entitled “System and Method for Managing Media” (“the ’641 patent”), a copy of which is attached as Exhibit C.

20. The ’947, ’228, and ’641 patents (collectively, “the Asserted Patents”) are all in the same patent family and the Asserted Patents all claim priority to the ’812 application, which

was filed with the PTO on March 28, 2000 and issued as the '947 patent.

21. The Asserted Patents have been cited by major businesses in the computer, software, communications, automotive, and mobile industries. The Asserted Patents have been cited in at least 123 patents and publications, with many of these patents assigned to corporations such as Apple, AT&T, Toyota, Google, Nokia, Bose, IBM, Hewlett-Packard, and Volkswagen.

22. Affinity Labs holds legal title, by assignment, to all of the Asserted Patents.

23. Affinity Labs holds legal title, by assignment, to the Asserted Patent.

The Accused Devices

24. In the last six years, BlackBerry has and continues to design, develop, manufacture, import, sell, and/or offer for sale smartphones. These smartphone products include, but are not limited to, the Aurora, Bold 9790, Bold 9900, Bold 9930, Classic, Curve 9310, Curve 9315, Curve 9360, DTEK50, DTEK60, KEYone, Leap, Motion, P'9918, P'9982, P'9983, Passport, Playbook, Priv, Q10, Z10, Z3, and Z30.

25. BlackBerry's smartphones each have a display and memory. For example, the DTEK50 smartphone has a 5.2-inch display, three gigabytes of RAM, and 16 gigabytes of flash memory.

26. BlackBerry has designed, developed, manufactured, imported, sold, and/or offered for sale smartphones loaded with the BlackBerry Operating System when sold. For example, when sold, the BlackBerry Z10 smartphone was loaded with version 10 of the BlackBerry Operating System.

27. BlackBerry also has and continues to design, develop, manufacture, import, sell, and/or offer for sale smartphones that are loaded with the Android Operating System when sold. For example, when sold, the DTEK50 is loaded with the Android Operating System.

28. BlackBerry's smartphones have the ability to play music stored locally on the device. For example, the BlackBerry Z10 and DTEK50 smartphones have the ability to play digitally compressed songs.

29. BlackBerry's smartphones allow users to navigate through locally saved songs by name. For example, the BlackBerry Z10 and DTEK50 smartphones allow users to navigate

through a list of songs organized by name, and displays graphical items such as the song name and album art while playing digitally compressed songs.

30. BlackBerry's smartphones have the ability to connect to a separate electronic device having a screen through use of wireless communication module, allowing a user to select songs stored on the smartphone for playback via that separate electronic device. For example, the BlackBerry Z10 and DTEK50 are capable of connecting to a Ford automobile containing a Ford SYNC entertainment system via Bluetooth. Upon that connection, the Ford SYNC system can display a selectable menu item associated with a song stored on the BlackBerry Z10 or DTEK50. By pressing soft buttons on the Ford SYNC system's display, a user can choose songs stored on the BlackBerry Z10 or DTEK50 to be wirelessly communicated to the Ford SYNC system and played through the automobile's speakers.

31. BlackBerry's smartphones have the ability to connect to a separate electronic device having a screen through use of a USB cable, allowing a user to use the separate electronic device's screen to navigate through songs stored on the smartphone and select songs for playback via that separate electronic device. For example, the BlackBerry Z10 or DTEK50 are capable of connecting to a Ford automobile containing a Ford SYNC entertainment system via a USB cable. Upon that connection, the Ford SYNC system can display the names of songs stored on the BlackBerry Z10 or DTEK50. By pressing soft buttons on the Ford SYNC system's display, a user can navigate through these songs and choose specific songs stored on the BlackBerry Z10 or DTEK50 to be played through the automobile's speakers.

32. BlackBerry's smartphones have the ability to receive both a wireless digital signal and a wireless analog signal. For example, the BlackBerry DTEK50 is capable of receiving both a wireless digital signal, e.g., LTE, and a wireless analog signal, e.g., FM Radio.

COUNT I

Infringement of U.S. Patent No. 7,187,947 by BlackBerry

33. Affinity Labs restates and realleges each of the allegations set forth above and incorporates them herein.

34. In violation of 35 U.S.C. § 271, BlackBerry has infringed, and if not enjoined, will

continue to infringe the ’947 patent by (1) manufacturing, using, marketing, selling, offering for sale, and/or importing, without authority, products and services that are covered by claim 43 of the ’947 patent, literally and/or under the doctrine of equivalents, in violation of 35 U.S.C. §271(a); and/or (2) inducing infringement of claim 43 of the ’947 patent, in violation of 35 U.S.C. § 271(b). In particular, BlackBerry infringes claim 43 of the ’947 patent directly and indirectly, literally and under the doctrine of equivalents, and by inducement by (1) manufacture, use, marketing of, sale, offer for sale, and/or importation of BlackBerry smartphones including at least the BlackBerry DTEK50; and (2) using BlackBerry smartphones including at least the BlackBerry DTEK50, as part of the audio system claimed in claim 43 of the ’947 patent.

35. BlackBerry has and continues to directly infringe claim 43 of the ’947 patent at least by making, using, selling, importing and/or offering to sell smartphones, including at least the BlackBerry DTEK50. BlackBerry markets and sells and has sold its smartphones to customers and potential customers that include, for example, companies in the smartphone industries in the United States, in addition to individual customers in the United States. BlackBerry indirectly infringes claim 43 of the ’947 patent at least because BlackBerry has had knowledge of claim 43 of the ’947 patent and has induced others to infringe claim 43 of the ’947 patent.

36. BlackBerry has had actual knowledge of claim 43 of the ’947 patent since at least the filing of a Joint Status Report on October 30, 2015 in the matter of *Affinity Labs of Texas, LLC v. Blackberry Limited, et al.*, Civil Action No. 14-cv-03031.

37. BlackBerry has and continues to indirectly infringe claim 43 of the ’947 patent by inducing others (e.g., its customers and end-users) to directly infringe claim 43 of the ’947 patent in this District and elsewhere in the United States in violation of 35 U.S.C. § 271(b) since at least October 30, 2015.

38. Through its website, user manuals, and advertising and sales personnel, BlackBerry markets and promotes the use of BlackBerry smartphones, including the BlackBerry DTEK50, which infringes claim 43 of the ’947 patent when they are used as BlackBerry intends by its customers and end-users. BlackBerry further instructs its customers and end-users how to

use such products in a manner that infringes claim 43 of the ’947 patent. As an example, BlackBerry instructs downstream customers concerning the use of its BlackBerry DTEK50 product, which infringes claim 43 of the ’947 patent. BlackBerry also instructs its customers and end-users to infringe claim 43 of the ’947 patent claims through the products themselves, for example, through on-screen instructions, intuitive user interfaces, and command prompts. Not by way of limitation, BlackBerry instructs its customers and end-users to activate their smartphones so that other Bluetooth devices can discover them, or so that they can scan for other, available Bluetooth devices with which to pair, including for the purposes of playing music. BlackBerry induces this direct infringement by advertising and instructing its customers and end-users to use BlackBerry smartphones, including at least the BlackBerry DTEK50, in a manner which infringes claim 43 of the ’947 patent, as set forth in the claim chart attached as Exhibit D and incorporated herein. (See Exhibit A, Exhibit D).

39. On information and belief, even though BlackBerry has been aware of the ’947 patent, and aware that its customers and end-users infringe claim 43 of the ’947 patent, BlackBerry has not made any changes, to date, to the functionality, operations, marketing, advertising, sales, technical support, etc. of such products to avoid infringing claim 43 of the ’947 patent. (*See* Exhibit A; Exhibit D).

40. As such, BlackBerry continues to specifically intend for and encourage its customers and end-users to use its products in a manner that directly infringe claim 43 of the ’947 patent.

41. BlackBerry’s actions of, inter alia, making, importing, using, offering for sale, and/or selling such products constitute infringement of claim 43 of the ’947 patent, which was duly issued by the United States Patent and Trademark Office and is presumed valid. BlackBerry has been aware since at least October 30, 2015 that its actions constitute infringement of claim 43 of the ’947 patent, and that claim 43 of the ’947 patent is valid. Despite BlackBerry’s knowledge, BlackBerry has not made any changes, to date, to the functionality, operations, marketing, advertising, sales, or technical support for the relevant operation of its accused products, and has not provided its users and/or customers with instructions on how to avoid infringement of claim

43 of the ’947 patent. Instead, BlackBerry has continued to, and still is continuing to, make, use, offer for sale, and/or sell accused products that when used as BlackBerry instructs and specifically intends, practice claim 43 of the ’947 patent.

42. BlackBerry does not have a license or permission to use the claimed subject matter in the ’947 patent.

43. Affinity Labs has been injured and has been caused significant financial damage as a direct and proximate result of BlackBerry’s infringement of the ’947 patent.

44. BlackBerry will continue to infringe the ’947 patent, and thus cause irreparable injury and damage to Affinity Labs unless enjoined by this Court.

45. Affinity Labs is entitled to recover from BlackBerry the damages sustained by Affinity Labs as a result of BlackBerry’s wrongful acts in an amount subject to proof at trial.

46. The ’947 Accused Products include, by way of example, Aurora, Bold 9790, Bold 9900, Bold 9930, Classic, Curve 9310, Curve 9315, Curve 9360, DTEK50, DTEK60, KEYone, Leap, Motion, P’9918, P’9982, P’9983, Passport, Playbook, Priv, Q10, Z10, Z3, and Z30.

COUNT II

Infringement of U.S. Patent No. 7,634,228 by BlackBerry

47. Affinity Labs restates and realleges each of the allegations set forth above and incorporates them herein.

48. In violation of 35 U.S.C. § 271, BlackBerry has infringed, and if not enjoined, will continue to infringe the ’228 patent by (1) manufacturing, using, marketing, selling, offering for sale, and/or importing, without authority, products and services that are covered by claim 3 of the ’228 patent, literally and/or under the doctrine of equivalents, in violation of 35 U.S.C. §271(a); and/or (2) inducing infringement of claim 3 of the ’228 patent, in violation of 35 U.S.C. § 271(b). In particular, BlackBerry infringes claim 3 of the ’228 patent directly and indirectly, literally and under the doctrine of equivalents, and by inducement by (1) manufacture, use, marketing of, sale, offer for sale, and/or importation of BlackBerry smartphones including at least the BlackBerry DTEK50; and (2) using BlackBerry smartphones including at least the BlackBerry DTEK50, as part of the audio system claimed in claim 3 of the ’228 patent.

49. BlackBerry has and continues to directly infringe claim 3 of the ’228 patent at least by making, using, selling, importing and/or offering to sell smartphones, including at least the BlackBerry DTEK50. BlackBerry markets and sells and has sold its smartphones to customers and potential customers that include, for example, companies in the smartphone industries in the United States, in addition to individual customers in the United States. BlackBerry indirectly infringes claim 3 of the ’228 patent at least because BlackBerry has had knowledge of the ’228 patent and has induced others to infringe the ’228 patent.

50. BlackBerry has had actual knowledge of the ’228 patent since at least March 3, 2015 upon filing of a Joint Status Report in the matter of *Affinity Labs of Texas, LLC v. Blackberry Limited, et al.*, Civil Action No. 14-cv-03031.

51. BlackBerry has and continues to indirectly infringe claim 3 of the ’228 patent by inducing others (e.g., its customers and end-users) to directly infringe claim 3 of the ’228 patent in this District and elsewhere in the United States in violation of 35 U.S.C. § 271(b) since at least March 3, 2015.

52. Through its website, user manuals, and advertising and sales personnel, BlackBerry markets and promotes the use of BlackBerry smartphones, including the BlackBerry DTEK50, which infringes claim 3 of the ’228 patent when they are used as BlackBerry intends by its customers and end-users. BlackBerry further instructs its customers and end-users how to use such products in a manner that infringes claim 3 of the ’228 patent. As an example, BlackBerry instructs downstream customers concerning the use of its BlackBerry DTEK50 product, which infringes claim 3 of the ’228 patent. BlackBerry also instructs its customers and end-users to infringe claim 3 of the ’228 patent claims through the products themselves, for example, through on-screen instructions, intuitive user interfaces, and command prompts. Not by way of limitation, BlackBerry instructs its customers and end-users to activate their smartphones so that other Bluetooth devices can discover them, or so that they can scan for other, available Bluetooth devices with which to pair, including for the purposes of playing music. BlackBerry induces this direct infringement by advertising and instructing its customers and end-users to use BlackBerry smartphones, including at least the BlackBerry DTEK50, in a manner which infringes claim 3 of

the ’228 patent, as set forth in the claim chart attached as Exhibit E and incorporated herein. (See Exhibit B, Exhibit E).

53. On information and belief, even though BlackBerry has been aware of the ’228 patent, and aware that its customers and end-users infringe claim 3 of the ’228 patent, BlackBerry has not made any changes, to date, to the functionality, operations, marketing, advertising, sales, technical support, etc. of such products to avoid infringing claim 3 of the ’228 patent. (*See* Exhibit B; Exhibit E).

54. As such, BlackBerry continues to specifically intend for and encourage its customers and end-users to use its products in a manner that directly infringe claim 3 of the ’228 patent.

55. BlackBerry’s actions of, inter alia, making, importing, using, offering for sale, and/or selling such products constitute infringement of claim 3 of the ’228 patent, which was duly issued by the United States Patent and Trademark Office and is presumed valid. BlackBerry has been aware since at least March 3, 2015 that its actions constitute infringement of claim 3 of the ’228 patent, and that claim 3 of the ’228 patent is valid. Despite BlackBerry’s knowledge, BlackBerry has not made any changes, to date, to the functionality, operations, marketing, advertising, sales, or technical support for the relevant operation of its accused products, and has not provided its users and/or customers with instructions on how to avoid infringement of claim 3 of the ’228 patent. Instead, BlackBerry has continued to, and still is continuing to, make, use, offer for sale, and/or sell accused products that when used as BlackBerry instructs and specifically intends, practice claim 3 of the ’228 patent.

56. BlackBerry does not have a license or permission to use the claimed subject matter in the ’228 patent.

57. Affinity Labs has been injured and has been caused significant financial damage as a direct and proximate result of BlackBerry’s infringement of the ’228 patent.

58. BlackBerry will continue to infringe the ’228 patent, and thus cause irreparable injury and damage to Affinity Labs unless enjoined by this Court.

59. Affinity Labs is entitled to recover from BlackBerry the damages sustained by

Affinity Labs as a result of BlackBerry's wrongful acts in an amount subject to proof at trial.

60. The '228 Accused Products include, by way of example, Aurora, Bold 9790, Bold 9900, Bold 9930, Classic, Curve 9310, Curve 9315, Curve 9360, DTEK50, DTEK60, KEYone, Leap, Motion, P'9918, P'9982, P'9983, Passport, Playbook, Priv, Q10, Z10, Z3, and Z30.

COUNTY III

Infringement of U.S. Patent No. 8,532,641 by BlackBerry

61. Affinity Labs restates and realleges each of the allegations set forth above and incorporates them herein.

62. In violation of 35 U.S.C. § 271, BlackBerry has infringed, and if not enjoined, will continue to infringe the '641 patent by (1) manufacturing, using, marketing, selling, offering for sale, and/or importing, without authority, products and services that are covered by claim 4 of the '641 patent, literally and/or under the doctrine of equivalents, in violation of 35 U.S.C. §271(a); and/or (2) inducing infringement of claim 4 of the '641 patent, in violation of 35 U.S.C. § 271(b). In particular, BlackBerry infringes claim 4 of the '641 patent directly and indirectly, literally and under the doctrine of equivalents, and by inducement by (1) manufacture, use, marketing of, sale, offer for sale, and/or importation of BlackBerry smartphones including at least the BlackBerry DTEK50; and (2) using BlackBerry smartphones including at least the BlackBerry DTEK50, as part of the audio system claimed in claim 4 of the '641 patent.

63. BlackBerry has and continues to directly infringe claim 4 of the '641 patent at least by making, using, selling, importing and/or offering to sell smartphones, including at least the BlackBerry DTEK50. BlackBerry markets and sells and has sold its smartphones to customers and potential customers that include, for example, companies in the smartphone industries in the United States, in addition to individual customers in the United States. BlackBerry indirectly infringes claim 4 of the '641 patent at least because BlackBerry has had knowledge of the '641 patent and has induced others to infringe the '641 patent.

64. BlackBerry has had actual knowledge of the '641 patent since at least November 26, 2013.

65. BlackBerry has and continues to indirectly infringe claim 4 of the '641 patent by

inducing others (e.g., its customers and end-users) to directly infringe claim 4 of the '641 patent in this District and elsewhere in the United States in violation of 35 U.S.C. § 271(b) since at least November 26, 2013.

66. Through its website, user manuals, and advertising and sales personnel, BlackBerry markets and promotes the use of BlackBerry smartphones, including the BlackBerry DTEK50, which infringes claim 4 of the '641 patent when they are used as BlackBerry intends by its customers and end-users. BlackBerry further instructs its customers and end-users how to use such products in a manner that infringes claim 4 of the '641 patent. As an example, BlackBerry instructs downstream customers concerning the use of its BlackBerry DTEK50 product, which infringes claim 4 of the '641 patent. BlackBerry also instructs its customers and end-users to infringe claim 4 of the '641 patent claims through the products themselves, for example, through on-screen instructions, intuitive user interfaces, and command prompts. Not by way of limitation, BlackBerry instructs its customers and end-users to activate their smartphones so that other Bluetooth devices can discover them, or so that they can scan for other, available Bluetooth devices with which to pair, including for the purposes of playing music. BlackBerry induces this direct infringement by advertising and instructing its customers and end-users to use BlackBerry smartphones, including at least the BlackBerry DTEK50, in a manner which infringes claim 4 of the '641 patent, as set forth in the claim chart attached as Exhibit F and incorporated herein. (See Exhibit C, Exhibit F).

67. On information and belief, even though BlackBerry has been aware of the '641 patent, and aware that its customers and end-users infringe claim 4 of the '641 patent, BlackBerry has not made any changes, to date, to the functionality, operations, marketing, advertising, sales, technical support, etc. of such products to avoid infringing claim 4 of the '641 patent. (*See* Exhibit C; Exhibit F).

68. As such, BlackBerry continues to specifically intend for and encourage its customers and end-users to use its products in a manner that directly infringe claim 4 of the '641 patent.

69. BlackBerry's actions of, inter alia, making, importing, using, offering for sale,

and/or selling such products constitute infringement of claim 4 of the '641 patent, which was duly issued by the United States Patent and Trademark Office and is presumed valid. BlackBerry has been aware since at least November 26, 2013 that its actions constitute infringement of claim 4 of the '641 patent, and that claim 4 of the '641 patent is valid. Despite BlackBerry's knowledge, BlackBerry has not made any changes, to date, to the functionality, operations, marketing, advertising, sales, or technical support for the relevant operation of its accused products, and has not provided its users and/or customers with instructions on how to avoid infringement of claim 4 of the '641 patent. Instead, BlackBerry has continued to, and still is continuing to, make, use, offer for sale, and/or sell accused products that when used as BlackBerry instructs and specifically intends, practice claim 4 of the '641 patent.

70. BlackBerry does not have a license or permission to use the claimed subject matter in the '641 patent.

71. Affinity Labs has been injured and has been caused significant financial damage as a direct and proximate result of BlackBerry's infringement of the '641 patent.

72. BlackBerry will continue to infringe the '641 patent, and thus cause irreparable injury and damage to Affinity Labs unless enjoined by this Court.

73. Affinity Labs is entitled to recover from BlackBerry the damages sustained by Affinity Labs as a result of BlackBerry's wrongful acts in an amount subject to proof at trial.

74. The '641 Accused Products include, by way of example, Aurora, Classic, DTEK50, KEYone, Leap, Motion, P'9983, Passport, and Z3.

DEMAND FOR TRIAL BY JURY

Affinity Labs demands a jury trial on all issues so triable, pursuant to Rule 38 of the Federal Rules of Civil Procedure.

PRAYER FOR RELIEF

WHEREFORE, Plaintiff Affinity Labs prays for the following relief:

1. A declaration that BlackBerry has infringed and is infringing the '947, '228, and '641 patents, and is liable to Affinity Labs for infringement;

2. An order enjoining BlackBerry from infringing the '947, '228, and '641 patents;

3. If a permanent injunction is not granted, a judicial determination of the conditions for future infringement such as a royalty bearing compulsory license or such other relief as the Court deems appropriate;

4. An award of damages, including pre-judgment and post-judgment interest, in an amount adequate to compensate Affinity Labs for BlackBerry's infringement of the '947, '228, and '641 patents, and that the damages be trebled pursuant to 35 U.S.C. § 284;

5. An equitable accounting of damages owed by BlackBerry for the period of infringement of the '947, '228, and '641 patents, following the period of damages established by Affinity Labs at trial;

6. A finding that this case is exceptional and an award of attorneys' fees pursuant to 35 U.S.C. § 285;

7. An award of costs, expenses, and disbursements; and

8. Such other and further relief as the Court deems Affinity Labs may be entitled to in law and equity.

Dated: May 29, 2018

Respectfully submitted,

By: /s/ David Martinez

Ronald J. Schutz (*pro hac vice pending*)
RSchutz@robinskaplan.com
Cyrus A. Morton (*pro hac vice pending*)
CMorton@robinskaplan.com
Benjamen C. Linden (*pro hac vice pending*)
BLinden@robinskaplan.com
ROBINS KAPLAN LLP
800 LaSalle Avenue, Suite 2800
Minneapolis, Minnesota 55402
Tel: (612) 349-8500
Fax: (612) 339-4181

David Martinez (CSB # 193183)
DMartinez@robinskaplan.com
ROBINS KAPLAN LLP
2049 Century Park East, Suite 3400
Los Angeles, CA 90067-3208
Tel: 310-552-0130
Fax: 310-229-5800

Attorneys for Plaintiff
Affinity Labs of Texas, LLC

Exhibit A

US007187947B1

(12) **United States Patent**
White et al.

(10) **Patent No.: US 7,187,947 B1**
(45) **Date of Patent: Mar. 6, 2007**

(54) **SYSTEM AND METHOD FOR COMMUNICATING SELECTED INFORMATION TO AN ELECTRONIC DEVICE**

(75) Inventors: **Russell W. White**, Austin, TX (US); **Kevin R. Imes**, Pflugerville, TX (US)

(73) Assignee: **Affinity Labs, LLC**, Austin, TX (US)

(*) Notice: Subject to any disclaimer, the term of this patent is extended or adjusted under 35 U.S.C. 154(b) by 0 days.

(21) Appl. No.: **09/537,812**

(22) Filed: **Mar. 28, 2000**

(51) **Int. Cl.**
H04Q 7/20 (2006.01)

(52) **U.S. Cl.** **455/556.1**; 455/66.1; 455/573; 455/557

(58) **Field of Classification Search** 455/412.1, 455/414.1, 556.1, 3.01, 3.03, 3.04, 410, 411, 455/414.2, 414.3, 517, 41.2, 556.2, 66.1, 455/572, 571, 93, 99, 557; 709/217, 218, 709/219, 228, 203; 379/447, 419; 705/26
See application file for complete search history.

(56) **References Cited**

U.S. PATENT DOCUMENTS

4,807,292	A		2/1989	Sorscher	
4,905,272	A		2/1990	Van de Mortel et al.	
5,307,326	A		4/1994	Osawa	
5,450,471	A		9/1995	Hanawa et al.	
5,586,090	A		12/1996	Otte	
5,587,560	A		12/1996	Crooks et al.	
5,594,779	A	*	1/1997	Goodman	455/3.04
5,694,120	A	*	12/1997	Indekeu et al.	340/7.23
5,774,793	A		6/1998	Cooper et al.	
5,870,680	A		2/1999	Guerlin et al.	
5,900,564	A	*	5/1999	Kurakake	84/477 R
5,940,767	A		8/1999	Bourgeois et al.	
5,953,005	A	*	9/1999	Liu	715/500.1
5,953,657	A		9/1999	Ghisler	
6,014,569	A	*	1/2000	Bottum	370/913
6,029,064	A	*	2/2000	Farris et al.	455/412
6,061,306	A		5/2000	Buchheim	
6,088,730	A	*	7/2000	Kato et al.	455/556
6,144,848	A	*	11/2000	Walsh et al.	235/379
6,167,253	A	*	12/2000	Farris et al.	455/412

(Continued)

FOREIGN PATENT DOCUMENTS

EP 0 898 378 * 2/1999

(Continued)

OTHER PUBLICATIONS

U.S. Appl. No. 60/167,179, filed Nov. 23, 1999.

(Continued)

Primary Examiner—Jean Gelin
(74) *Attorney, Agent, or Firm*—Baker Botts, LLP; Roger J. Fulghum

(57) **ABSTRACT**

Disclosed are a system and method for communicating selected information to an electronic device. The disclosed system may include a digital engine operable to maintain data representing the selected information in a digital format. In some embodiments, the digital engine may be communicatively coupled to a graphical user interface that allows a user to identify the selected information. The system may also include a communication engine communicatively coupled to the digital engine, the communication engine may be operable to wirelessly communicate the data representing the selected information to an electronic device.

42 Claims, 9 Drawing Sheets

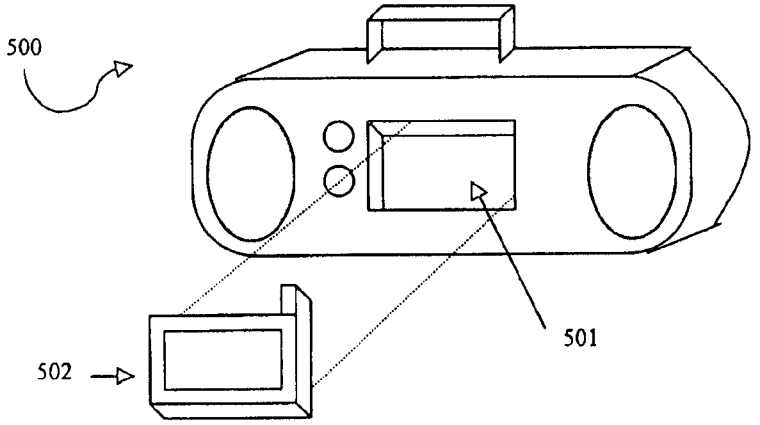

U.S. PATENT DOCUMENTS

6,199,076	B1 *	3/2001	Logan et al.	715/501.1
6,232,539	B1	5/2001	Looney et al.	
6,236,832	B1 *	5/2001	Ito	455/3.06
6,240,297	B1	5/2001	Jadoul	
6,247,130	B1 *	6/2001	Fritsch	713/171
6,292,440	B1	9/2001	Lee	
6,314,094	B1 *	11/2001	Boys	370/352
6,339,706	B1 *	1/2002	Tillgren et al.	455/419
6,401,085	B1 *	6/2002	Gershman et al.	707/4
6,407,750	B1 *	6/2002	Gioscia et al.	345/716
6,418,138	B1 *	7/2002	Cerf et al.	370/352
6,420,975	B1	7/2002	DeLine et al.	
6,496,205	B1 *	12/2002	White et al.	345/824
6,496,692	B1 *	12/2002	Shanahan	455/418
6,509,716	B2 *	1/2003	Yi	320/115
6,510,210	B1 *	1/2003	Baughan	379/90.01
6,516,466	B1 *	2/2003	Jackson	455/3.01
6,526,335	B1 *	2/2003	Treyz et al.	701/1
6,587,835	B1 *	7/2003	Treyz et al.	705/14
6,591,085	B1	7/2003	Grady	
6,671,715	B1	12/2003	Langseth et al.	
6,721,710	B1 *	4/2004	Lueck et al.	369/59.21
6,741,980	B1	5/2004	Langseth et al.	
6,772,212	B1	8/2004	Lau et al.	
6,788,528	B2	9/2004	Enners et al.	
6,792,263	B1	9/2004	Kite	
6,792,615	B1	9/2004	Rowe et al.	
6,907,112	B1 *	6/2005	Guedalia et al.	379/88.17
6,915,272	B1 *	7/2005	Zilliacus et al.	705/26
6,956,833	B1 *	10/2005	Yukie et al.	370/352
6,975,835	B1	12/2005	Lake et al.	
2002/0023028	A1	2/2002	Quarendon et al.	
2002/0046084	A1 *	4/2002	Steele et al.	705/14
2003/0008646	A1 *	1/2003	Shanahan	455/418
2004/0078274	A1 *	4/2004	Aarnio	705/26
2005/0010633	A1 *	1/2005	Shanahan	709/200
2005/0049002	A1	3/2005	Whitet et al.	
2005/0054379	A1 *	3/2005	Cao et al.	455/556.1
2005/0096018	A1	5/2005	White et al.	

FOREIGN PATENT DOCUMENTS

JP	10-173737	*	6/1998
KR	1999-024210	*	3/1999
KR	1999-0033726	*	5/1999
WO	98/19480	*	5/1998
WO	99/43136	*	8/1999
WO	00/38340	*	6/2000

OTHER PUBLICATIONS

U.S. Appl. No. 09/234,259, filed Jan. 20, 1999.
"Philips PSA [128MAX," PC Authority Reviews, May 1, 2003, 1 pg.
"Sony Network Walkman NW-MS70D," PC Authority Reviews, Oct. 8, 2003, 1 pg.
"Targa TMU-401," PC Authority Reviews, Oct. 8, 2003, 1 pg.
"Targa TMU-604," PC Authority Reviews, Oct. 8, 2003, 1 pg.

* cited by examiner

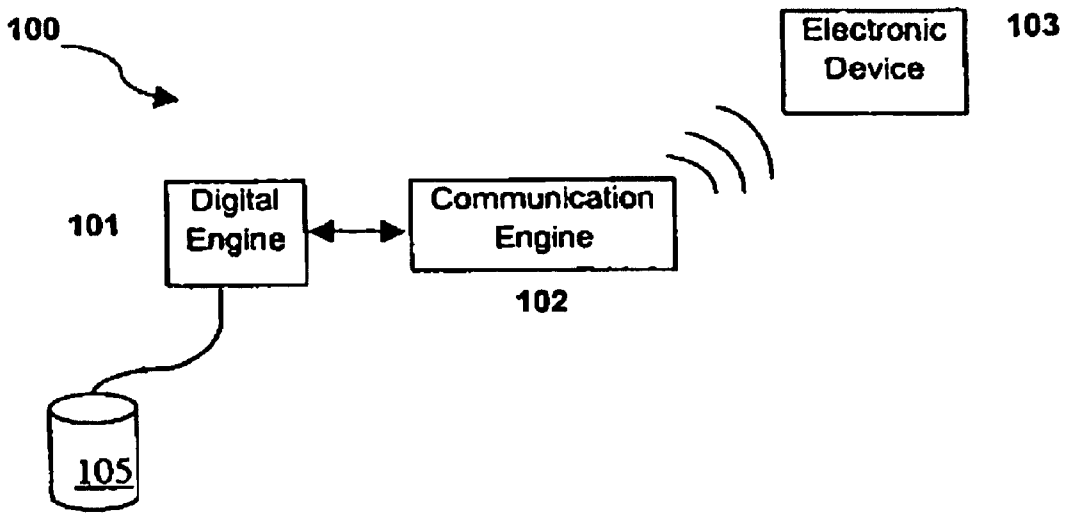
100
Electronic Device
103
101
Digital Engine
Communication Engine
102
105

FIG. 1

FIG. 2

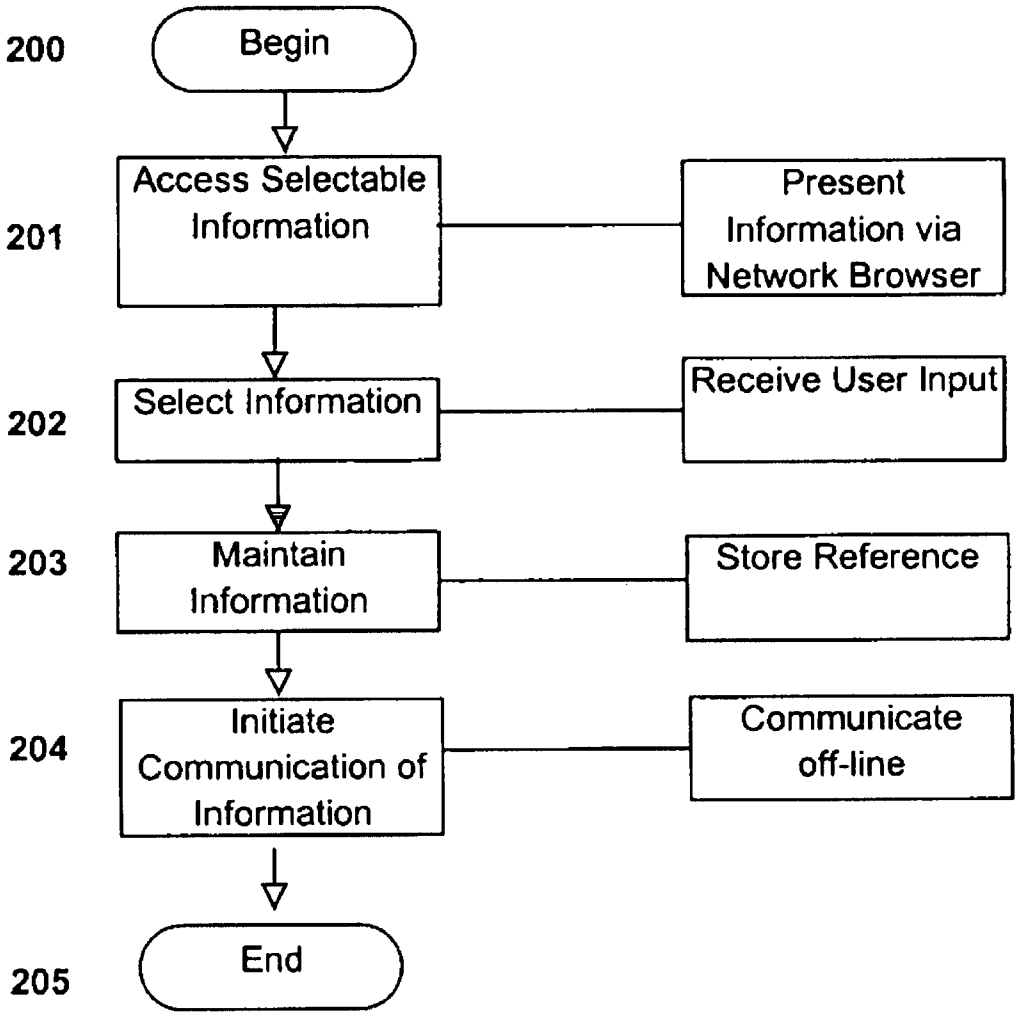
200
Begin
201
Access Selectable Information
Present Information via Network Browser
202
Select Information
Receive User Input
203
Maintain Information
Store Reference
204
Initiate Communication of Information
Communicate off-line
205
End

FIG. 3

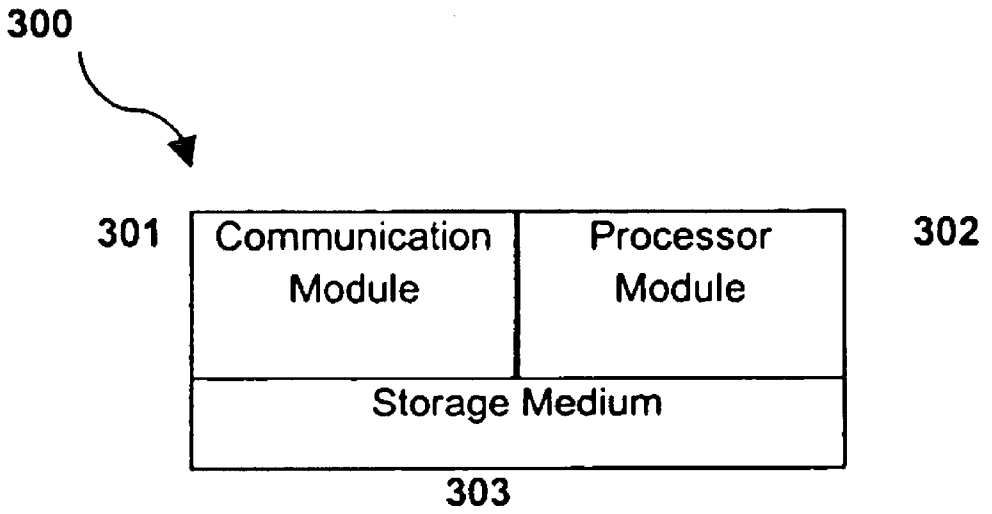
300
301
Communication Module
Processor Module
302
Storage Medium
303

FIG. 4

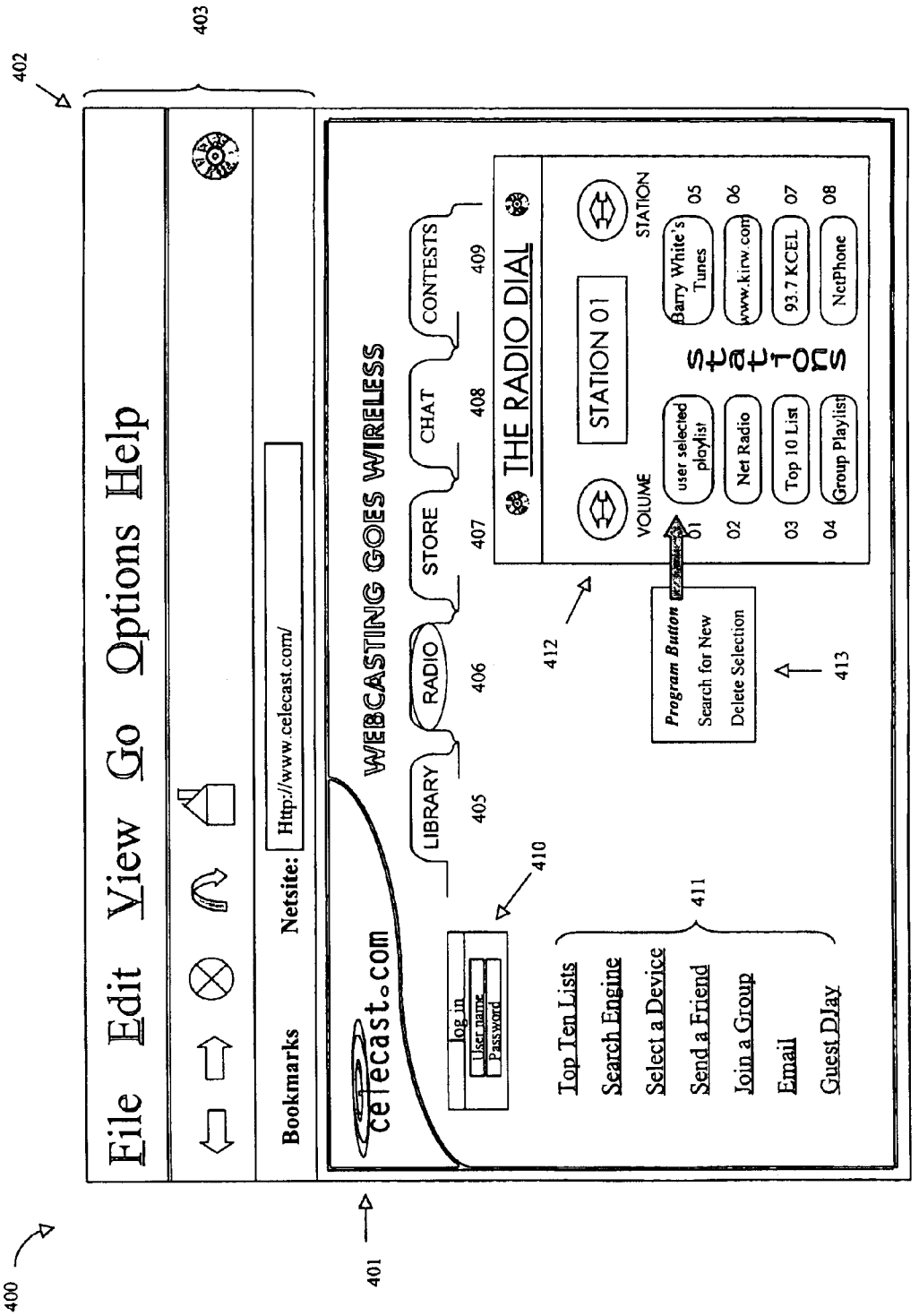
400
401
402
403
File Edit View Go Options Help
Bookmarks
Netsite:
Http://www.celecast.com/
celecast.com
WEBCASTING GOES WIRELESS
LIBRARY
RADIO
STORE
CHAT
CONTESTS
405
406
407
408
409
410
411
412
413
log in
User name
Password
Top Ten Lists
Search Engine
Select a Device
Send a Friend
Join a Group
Email
Guest DJay
THE RADIO DIAL
VOLUME
STATION 01
STATION
STATIONS
user selected playlist
Net Radio
Top 10 List
Group Playlist
Barry White's Tunes
www.kirw.com
93.7 KCEL
NetPhone
01
02
03
04
05
06
07
08
Program Button
Search for New
Delete Selection

FIG 5A

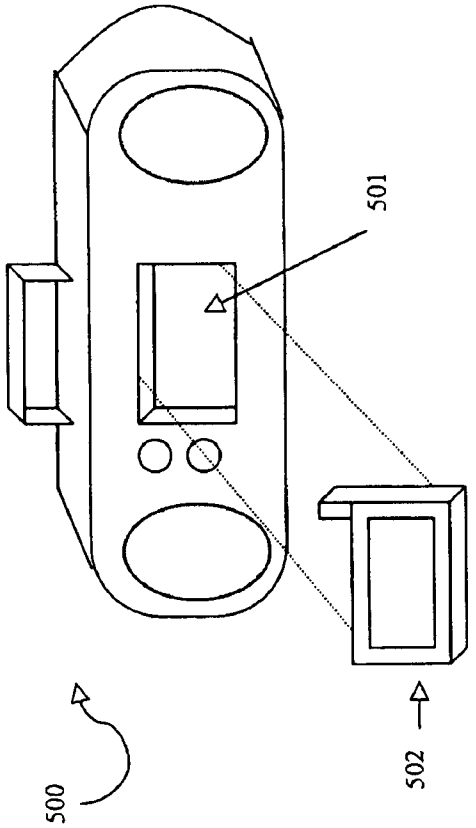

FIG 5B

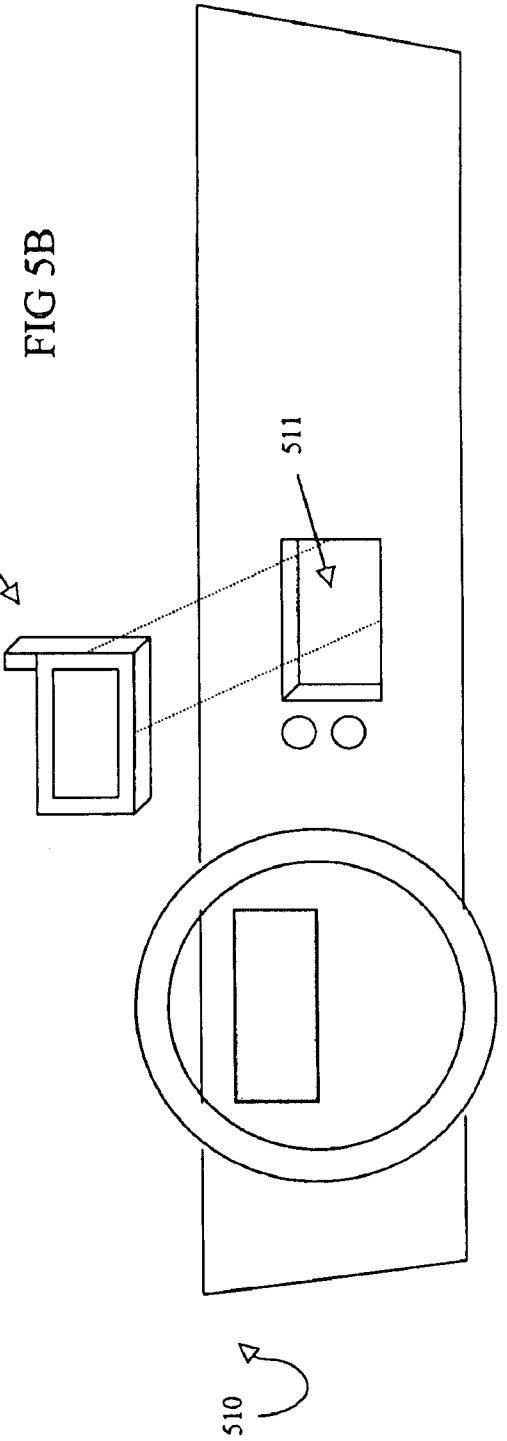

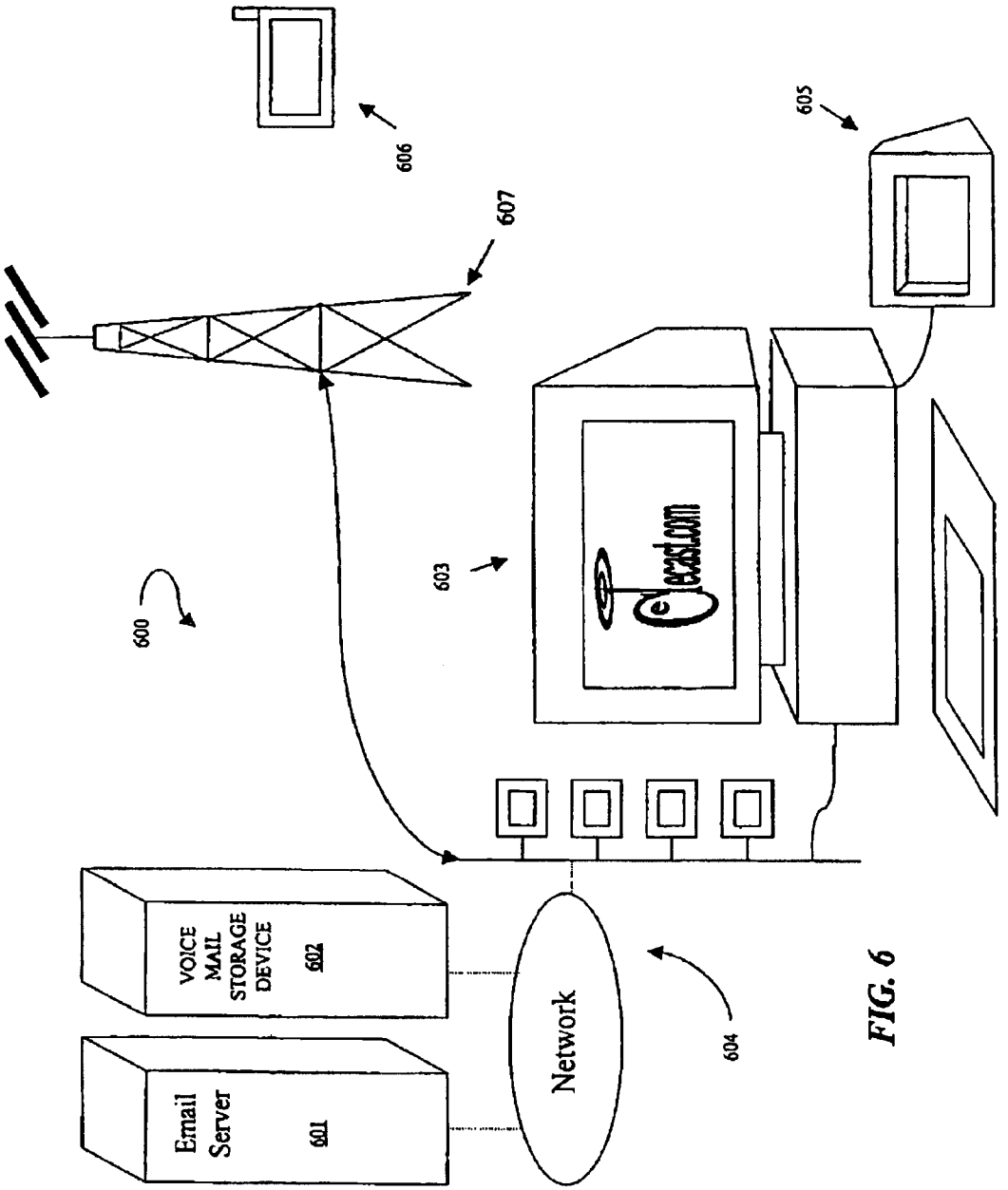
600
606
607
605
603
VOICE MAIL STORAGE DEVICE
602
Email Server
601
Network
604

FIG. 6

FIG 7

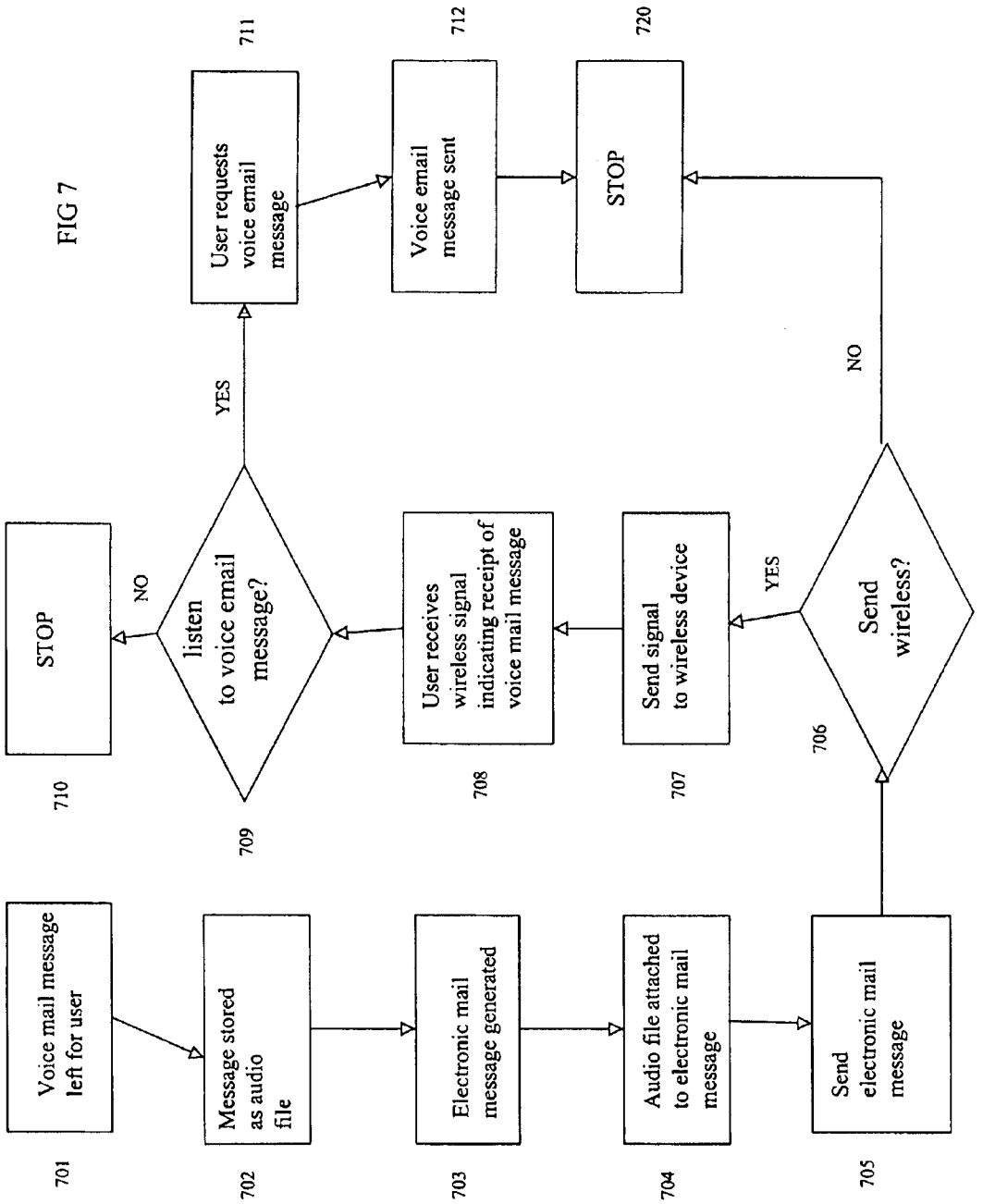
Voice mail message left for user
701
Message stored as audio file
702
Electronic mail message generated
703
Audio file attached to electronic mail message
704
Send electronic mail message
705
Send wireless?
706
YES
Send signal to wireless device
707
User receives wireless signal indicating receipt of voice mail message
708
listen to voice email message?
709
NO
STOP
710
YES
User requests voice email message
711
Voice email message sent
712
NO
STOP
720

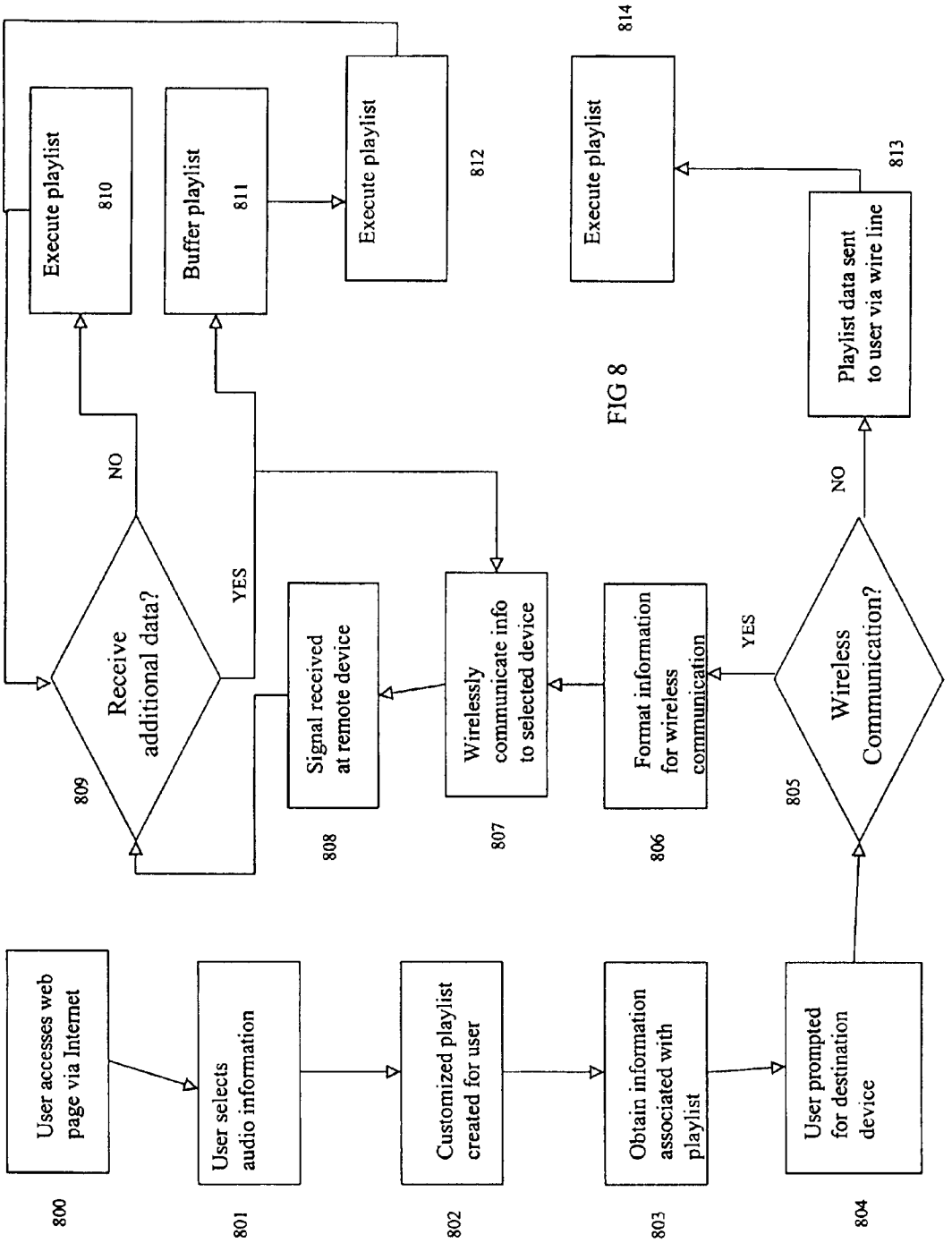
User accesses web page via Internet
800
User selects audio information
801
Customized playlist created for user
802
Obtain information associated with playlist
803
User prompted for destination device
804
Wireless Communication?
805
YES
NO
Format information for wireless communication
806
Wirelessly communicate info to selected device
807
Signal received at remote device
808
Receive additional data?
809
YES
NO
Execute playlist
810
Buffer playlist
811
Execute playlist
812
Playlist data sent to user via wire line
813
Execute playlist
814

FIG 8

FIG 9

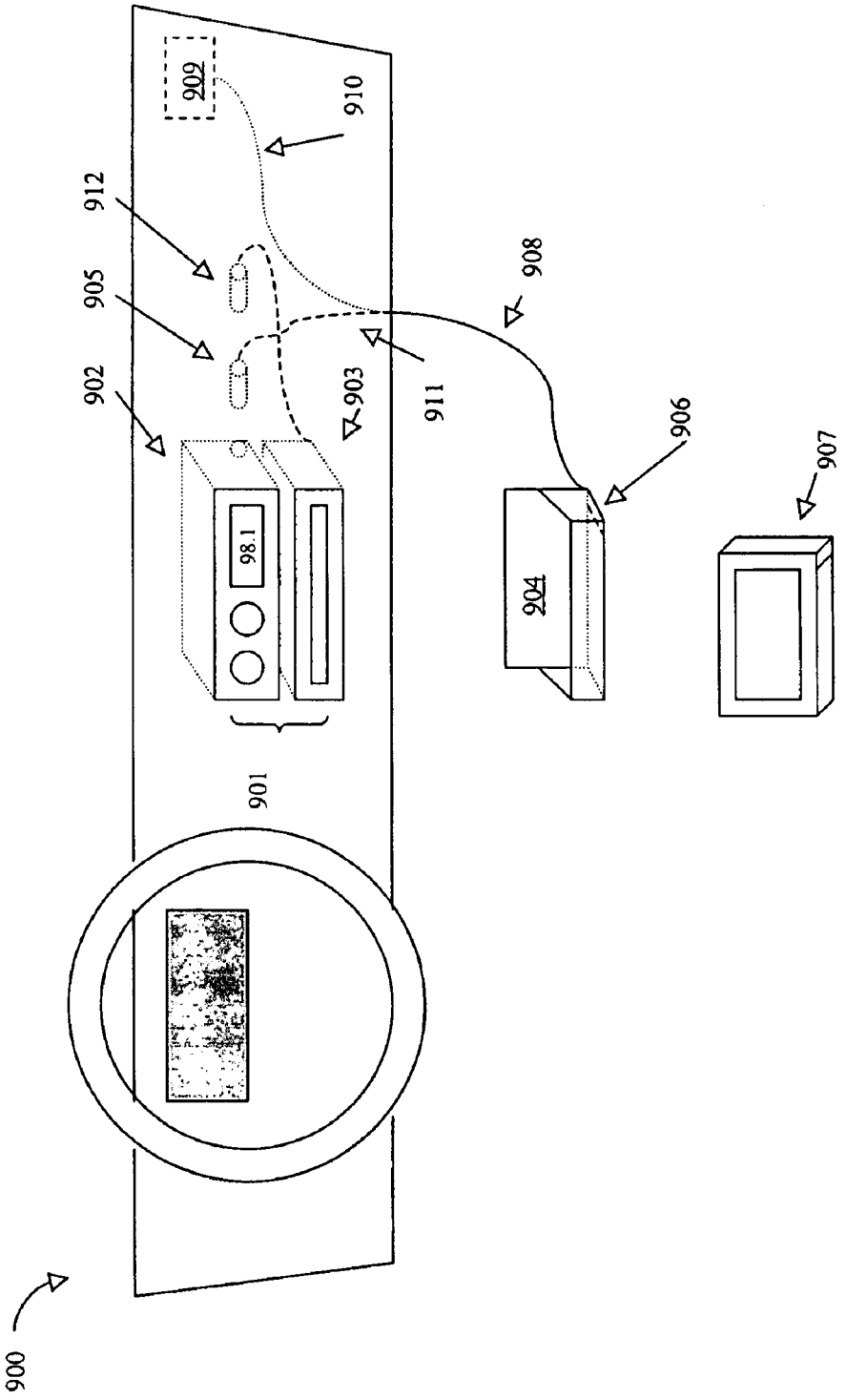

SYSTEM AND METHOD FOR COMMUNICATING SELECTED INFORMATION TO AN ELECTRONIC DEVICE

TECHNICAL FIELD OF THE INVENTION

The present disclosure relates in general to the field of wireless communication, and more particularly to a system and method for communicating selected information to an electronic device.

BACKGROUND OF THE INVENTION

The first commercial radio stations in the United States began operation around 1920. Today, there may be as many as 12,000 radio stations in the United States programming in several distinct formats. When broadcasting their respective signals, these radio stations often use an analog signal, which may be modulated based on frequency or amplitude. Frequency modulated (FM) radio appears to be the dominant entertainment medium while amplitude modulated (AM) radio seems to be a popular outlet for news and information.

Unfortunately, analog radio may be unable to provide the sound quality and consistency that radio listeners desire. As such, several broadcasting related companies have begun to consider a movement to digital radio. Unlike analog radio reception, digital radio reception may be able to provide compact disk (CD) quality sound while remaining virtually immune to interference. Being immune to interference may result in reducing static growls or 'multipath' echoes, echoes caused by signal reflections off buildings or topographical features.

Some countries, like Canada and many European countries, may choose to have digital radio operate in a single digital radio band such as the L-band between 1452–1492 megahertz (MHz). This band would allow the reception of both terrestrially and satellite-originated signals. By comparison, FM radio typically operates between 88 and 108 MHz while AM radio typically operates between 0.525 and 1.705 MHz. Neither of these bands allows for easy transmission via satellite.

Canada proposed using the L-Band for digital radio as early as 1992. Several countries throughout the world have since agreed to use the L-Band for digital radio with one notable exception. It appears the United States has chosen not to operate its digital radio within the L-Band. In the United States, the L-Band may already be committed for military uses. Apparently, the United States plans to adopt a system called in-band on-channel, or IBOC, which fits within the AM and FM frequencies.

IBOC technology may offer some advantages over L-Band transmissions. For example, there may be no need for new spectrum allocations. There may be backward and forward compatibility with existing AM and FM systems on both the transmitter and receiver sides, and there may be a low-investment upgrade to digital systems. Unfortunately, a workable IBOC solution is yet to be seen though technology may someday make IBOC digital radio commercially possible.

Even if an IBOC solution becomes commercially available in the United States, IBOC digital radio may suffer from several shortcomings. For example, there may global standardization problems. Though the United States favors IBOC, the European and Canadian communities seem to favor L-Band making the establishment of a global standard difficult.

SUMMARY OF THE INVENTION

In accordance with teachings of the present disclosure, a system and method for communicating selected information to an electronic device are disclosed that provide significant advantages over prior developed systems. The disclosed embodiments allow a radio listener to create a personal playlist and to listen to this playlist in a wireless atmosphere while enjoying CD quality sound.

According to one aspect of the present disclosure, a system incorporating teachings of the present invention may include a digital engine operable to maintain data representing the selected information in a digital format. In some embodiments, the digital engine may be communicatively coupled to a graphical user interface that allows a user to identify the selected information. The system may also include a communication engine communicatively coupled to the digital engine, the communication engine may be operable to wirelessly communicate the data representing the selected information to an electronic device.

The wireless communication may involve communicating via a cellular communications network. The cellular communications network may be, for example, the global system for mobile communications network (GSM), which may operate around 1.8 GHz or 1.9 GHz. The cellular communications network may also involve, for example, the code-division multiple access network (CDMA). In some embodiments, the wireless communication may involve communicating via a high-speed, low-power microwave wireless link. For example, the wireless link may include a Bluetooth link, which may operate around 2.4 GHz.

According to another aspect of the present invention, a system for communicating selected information to an electronic device is disclosed. The system includes a digital engine operable to maintain data associated with selected audio information and a communication engine communicatively coupled to the digital engine, the communication engine operable to initiate wireless communication of the data to the electronic device.

According to another aspect of the present invention, a method for communicating selected audio information to an electronic device is provided. The method includes maintaining data associated with the selected audio information using a digital engine, and initiating wireless communication of the data to the electronic device.

According to another aspect of the present invention, an electronic device for receiving selected audio information via wireless communication is provided. The device includes a communication module operable to receive wireless communication of the selected audio information, a storage medium operably coupled to the communication module, the storage medium operable to store the selected audio information, and a processor module coupled to the communication module, the processor module operable to process the received selected audio information.

According to another aspect of the present invention, a method for communicating selected audio information to an electronic device is provided. The method includes presenting information associated with audio information within an interface associated with a communication network, receiving an input from a user identifying the selected information, maintaining data associated with the selected audio information using digital engine, and initiating wireless communication of the data to the electronic device.

According to a particularized aspect of the present invention the interface operates in a browsing environment and the wireless communication operates outside the browsing environment.

Other technical advantages will be apparent to those of ordinary skill in the art in view of the following specification, claims, and drawings.

BRIEF DESCRIPTION OF THE DRAWINGS

A more complete understanding of the present embodiments and advantages thereof may be acquired by referring to the following description taken in conjunction with the accompanying drawings, in which like reference numbers indicate like features, and wherein:

FIG. **1** depicts a general system for wirelessly communicating selective information to an electronic device in accordance with one aspect of the present invention;

FIG. **2** illustrates a block diagram of a method of wirelessly communicating selected information to an electronic device;

FIG. **3** illustrates an electronic device operable to receive selected audio information in accordance with the teachings of the present invention;

FIG. **4** illustrates a graphical user interface (GUI) for displaying selectable audio information according to one aspect of the present invention;

FIG. **5**A illustrates a portable radio system having a mount for an electronic device according to one embodiment of the present invention;

FIG. **5**B illustrates automobile console having a mount for coupling an electronic device according to one aspect of the present invention;

FIG. **6** illustrates a block diagram of a system for communicating voice mail messages using email according to one embodiment of the present invention;

FIG. **7** illustrates a flow chart for providing voice email messages according to one embodiment of the present invention;

FIG. **8** illustrates a flow diagram of a method for providing selected audio information to an electronic device according to one embodiment of the present invention; and

FIG. **9** illustrates an automobile console having a mount for an electronic device according to one embodiment of the present invention.

DETAILED DESCRIPTION OF THE INVENTION

The conceptual groundwork for the present invention includes wirelessly communicating selective information to an electronic device. According to one aspect, a user may interact with the Internet to select information, such as audio information, and wirelessly communicate the selected information to an electronic device. The electronic device receives the information via a wireless communications network and processes the information accordingly. In a particularized form, a user may select information from an Internet website operable to allow selectivity of audio information such a songs, on-line radio stations, on-line broadcasts, streaming audio, or other selectable information. Upon selecting the audio information, information or data associated with the selected audio information is wirelessly communicated to an electronic device. The electronic device may then be used to process the selected audio information. In this manner, a user may receive selective audio information via a wireless electronic device.

In one form, the electronic device may be operable to communicate with an individual's automobile audio system. A user may select audio information utilizing a personal computer with access to a website operable to display selectable audio information. The selected audio information may then be wirelessly communicated to the electronic device associated with an automobile's audio system. Therefore, upon receiving the selected audio information, a user may access and play the received audio information utilizing the electronic device in association with the automobiles audio system.

The present invention is not limited to communicating only audio information. One skilled in the art can appreciate that other types of information, such as video, textual, etc. may be communicated utilizing the systems and methods disclosed herein without departing from the spirit and scope of the present invention. Additionally, it will be understood that information may be formatted in a plurality of ways at different phases of communication without losing the underlying content of the selected information. For example, an audio file may be formatted, segmented, compressed, modified, etc. for the purpose of providing or communicating the audio invention. Therefore, the term 'audio information' or 'information' is used in a general sense to relate to audio information in all phases of communication.

FIG. **1** depicts a general system for wirelessly communicating selective information to an electronic device in accordance with one aspect of the present invention. The system, illustrated generally at **100**, includes a digital engine **101** coupled to a communications engine **102**. Communications engine **102** is remotely coupled to an electronic device **103**. Digital engine **101** may be directly or indirectly coupled to storage device **105** operable to store information.

Digital engine **101** maintains information or data associated with selected information in a digital format. The information may be stored within storage device **105** or other storage devices operable to maintain data or information associated with the selected information. Communications engine **102** is communicatively coupled to digital engine **101** and operable to wirelessly communicate the selected information to electronic device **103**.

During operation, audio information may be selected by a user utilizing a personal computer or other devices operable to communicate with an information network. Digital engine **102** is operable to maintain information associated with the selected audio information. For example, the information could be several songs or titles configured as an audio file and formatted in a digital format such as an MP3 file, wave file, etc. The maintained information may also be a reference to a network location where an audio file may be stored, a network location where a network broadcast of audio information may be located, etc. or other network locations having information associated with the selected audio information. Therefore, digital engine **101** may maintain a plurality of different types of information or data associated with the selected audio information. System **100**, utilizing communication engine **102**, may wirelessly communicate data or information associated with the selected audio information to electronic device **103** thereby providing wireless communication of selected information to an electronic device operable to receive wireless communications.

In one embodiment, digital engine **101** may be used in association with an Internet website configured to provide access to selectable information. The Internet website operably associated with digital engine **101** allows a user to select information to be wirelessly communicated to elec-

tronic device **103** utilizing a network environment. The Internet website may include several different types of information related to audio information. FIG. **4**, described in greater detail below, illustrates one embodiment of providing an Internet website for displaying selectable audio information. For example, the Internet website may include music and/or artist search engines, playlists, top 10 charts, artists by genre, and other information associated with audio information. A user may select information associated with the audio information and digital engine **101** can maintain the information or data associated with the selected information in a digital format. Communications engine **102** coupled to digital engine **101** may wirelessly communicate data associated with the selected audio information to electronic device **103**. Therefore, a user may access and select audio information via an Internet website and wirelessly communicate the data to an electronic device. As such, system **100** advantageously allows for wireless communication of selected audio information to electronic devices that may be remotely located from a conventional terrestrial communication network.

Electronic device **103** may be configured in a plurality of ways for receiving wireless communication of selected audio information. In one embodiment, electronic device **103** may be operable as a component configured to receive a cellular signal comprising the selected information communicated by the communication engine. For example, a device having a cellular modem may be operable to receive the information at specified intervals. Upon receiving the information the electronic device may process the received information. Electronic devices are described in more detail below and may include a network radio, a modular device, an audio system, a personal digital assistant (PDA), a cellular phone, or other electronic devices operable to receive information wirelessly communicated by communication engine **102**.

Communications engine **102** may be operable to wirelessly communicate selected information to electronic device **103** in a plurality of ways. The present invention advantageously allows for several different embodiments of wirelessly communicating selected audio information to electronic device **103** and is not limited to any specific configuration described below.

Several different types or combinations of wireless communication may be realized by the present invention. Communications engine **102** may be operable to wirelessly communicate the selected information from a information network, such as the Internet, to an electronic device operable to receive wireless communications. In one embodiment, communications engine **102** may comprise a conduit to interface information with a wireless communication network. The conduit may configure the information located within the information network into a format operable to be transmitted via wireless communication. For example, a wireless device may be operable to receive packets of information having a specific size and in a specific format. In such an embodiment, communications engine **102** could format the information into a desirable format for wirelessly communicating the information to electronic device **103**.

Several types of wireless communication may be used by communications engine **102** to communicate the selected information to an electronic device. Communications networks such as GSM, Digital Satellite communication, SB, Radio bands, DRC, SuperDRC or other systems or types of transmission such as TDMA, CDMA, spread spectrum, etc. or frequencies such as between about 1.7 GHz and 2.0 GHz may be realized by the present invention for communicating information or data representing the selected audio information to electronic device **103**.

In one embodiment, the selective information may be communicated using a digital broadcast signal. Digital broadcast includes providing information via a signal such as AM, FM, and the like. Digital information may be included or encoded as a sub-carrier within the broadcast signal and received by electronic device **103**. A digital sub-carrier may include a selective bandwidth of frequencies for a specific radio station (i.e. 6 MHz for FM). The selective information may be wirelessly communicated to electronic device **103** utilizing a communication engine **102** operable to communicate the selective information via a digital FM signal. In this manner, selective information may be communicated within digital FM sub-carriers to an electronic device operable to receive the information. For example, a user may subscribe to communicate the information via an FM sub-carrier and receive the selective data through wireless communication via a specified FM sub-carrier.

In one embodiment, the selected information may be formatted and transmitted to achieve a desirable transmission rate. For example, conventional systems may transmit information at a speed of 10 kilobits per second. Therefore, for 1 megabyte of information to be communicated to an electronic device, a transmission time of approximately 800 seconds may be required. The present invention may allow for a relative increase in transmission speed by removing the requirement that information be communicated asynchronously to an electronic device. For example, conventional wireless communication utilize a specified frequency to communicate information in two directions (i.e., cellular phones). As such, information is communicated across a channel in an asynchronous manner to provide a continuous audio signal to the recipient. The present invention advantageously allows for signals to be transmitted to an electronic device in a less than asynchronous manner. For example, if a user selected a song to be wirelessly communicated to an electronic device, system **100** could communicate the information in a less than asynchronous manner allowing the selected information to be transmitted efficiently thereby decreasing the overall download time for the selected audio information.

In one embodiment, the selected information may be compressed and transmitted across the same frequency but at different phases thereby allowing plural signals having different phases to be wirelessly communicated to an electronic device. Therefore, the electronic device may be operable to receive multiple phased signals and process the selective information accordingly.

In one embodiment, the information may be wirelessly communicated at a relatively slow transmission rate. For example, a user may schedule when the selected audio information may be used by electronic device **103**. The user may select several different audio tracks or songs to be transmitted to an electronic device associated with the user's vehicle such that the user can listen to the user selected audio information during the drive home at the end of a work day. Therefore, it may be desirable to utilize a slower transfer speed due to the extended amount of time available prior to actual use of the selected audio information. In this manner, communications networks having less or slower transfer rates may be used to wirelessly communicate the selected audio information to the electronic device.

In another embodiment, high speed wireless communication networks may be used to communicate the selected audio information. For example, a user may want to listen to an Internet broadcast of an Internet radio station. Therefore,

high speed communication may be required to wirelessly communicate or stream the selected audio information to an electronic device.

In another embodiment, a hybrid of wireless communication rates may be deployed depending on the requirements of the selected audio information and/or the electronic device. For example, the selected audio information may first be transmitted to the electronic device via high speed communication until enough information has been wirelessly communicated and buffered into a memory device operably associated with the electronic device. Upon communicating a certain percentage of the selected audio information, slower communication speeds may then be used to communicate additional selected audio information.

Therefore, system **100** may be configured in a plurality of ways to communicate selected information to electronic device **103**. Digital engine **101** may be used to maintain data or information associated with the selected information and communication engine **102**, communicatively coupled to digital engine **101**, may wirelessly communicate selected information to electronic device **103**.

FIG. **2** illustrates a block diagram of a method of wirelessly communicating selected information to an electronic device. The method may be used in association with the system illustrated in FIG. **1** or other systems operable to utilize the method of FIG. **2**.

The method begins generally at step **200**. At step **201** selectable audio information may be accessed utilizing a network communications device. For example, selectable audio information may be displayed at an Internet website accessible by a personal computer. In another embodiment, the selectable information may be accessed utilizing a wireless communications device such as, a cellular phone, a PDA device, or other devices operable to provide access to the selectable audio information. Upon accessing the selectable information, the method proceeds to step **202** where a user can identify or select audio information to be wirelessly communicated to an electronic device. For example, a user may select an entire album to be wirelessly communicated to a PDA device.

Upon the user selecting the audio information, the method proceeds to step **203** where the method maintains information associated with the selected information. In one embodiment, the information may be an audio file, such as a wave file, and MP3 file, etc. representative of the selected audio information. In another embodiment, a network location that comprises a file representing the selected information may be maintained. Another example may include a network location of a network broadcast of audio information. Therefore, the method at step **203** may maintain several different types of information associated with the selected audio information.

Upon maintaining information or data associated with the selected information, the method proceeds to step **204** where the method wirelessly communicates information associated with the selected information to an electronic device. For example, if an audio file associated with the selected audio information was maintained, the method would communicate the audio file to the electronic device. In another embodiment, a link or network address broadcasting the selected audio information may be accessed and, at step **204**, wirelessly communicated to an electronic device. In another embodiment, a combination of different types of audio information may be wirelessly communicated to an electronic device. Upon transmitting the selected audio information, the method proceeds to step **205** where the method ends.

Selected audio information may be communicated in a plurality of ways as described above including communicating via a cellular communications network to an electronic device operable to receive cellularly communicated signals. For example, the information may be selected from a website operable to display selectable information. Upon selecting the audio information, a data file representing the selected audio information may be wirelessly communicated to an electronic device thereby allowing a user to select audio information via the Internet and wirelessly communicate the information to an electronic device. In some embodiments, the wireless communication to an electronic device may occur in an off-line environment. For example, a user may go "on-line" to access a website and select information and then go "off-line" or end the browsing session. The wireless communication may then occur while the user is off-line thereby removing the confines of using an active or on-line browsing environment (i.e. Internet radio broadcast, streaming audio, etc.) for accessing selected information.

Therefore, the method of FIG. **2** allows for information, such as audio information, to be communicated from a network location such as a web site, to an electronic device via wireless communication. The present invention advantageously allows users to access and download information accessible by a network location to an electronic device operable to receive wireless communications thereby reducing the need for land lines, terrestrial communication networks, etc. for communicating selective information.

In one embodiment, the method of FIG. **2** may be deployed in association with a Internet website operable to display selectable links for downloading information. The information may include audio information such as MP3's, streaming audio, streaming, Internet broadcasts, etc. selectable by a user and operable to be wirelessly communicated to an electronic device. By providing a user with a website of selectable audio information operable to be wireless communicated to an electronic device, a user may customize information communicated to an electronic device. In one embodiment, a user may communicate information to an electronic device that may not be owned by the user. For example the method of FIG. **2** could be modified to allow a user to wirelessly communicate audio information to a plurality of electronic devices that may or may not be owned by the user.

FIG. **3** illustrates an electronic device operable to receive selected audio information in accordance with the teachings of the present invention. Electronic device **300** includes a communication module **301** such as a transceiver coupled to storage medium **303** such as a high speed buffer, programmable memory, or other devices operable to store information. Electronic device **300** may also include processor **302** operably associated with communication module **301** and storage medium **303**. Processor **302** may be operable to process wirelessly communicated selected information and in one embodiment may be integrated as part of communication module **301** of storage medium **303**. In the same manner, as larger scale integration of electronic devices proliferate, communication module **301**, processor **302**, and storage medium **303** may be integrated into one communication component or device operable as electronic device **300**.

Processor **302** may be operable using software that may be stored within storage medium **303**. In one embodiment, software upgrades may be communicated to electronic device **300** via wireless communication allowing for efficient system upgrades for electronic device **300**. Storage

medium **303** may include one or several different types of storage devices. For example, storage medium **303** may include programmable gate arrays, ROM devices, TRAM devices, EEPROMs, minidisks or other memory devices operable to store information.

During use, electronic device **300** receives wireless communications of selective information. The information may be transmitted via a wireless communications network and received by electronic device **300** via transceiver **301**. Transceiver **301** may be operable to convert the received wireless communication signal into a desirable format and store the received information within storage medium **303**. The received information may then be processed by electronic device **300**.

In one embodiment, electronic device **300** may be operable as an audio player configured to play digital representations of music. For example, electronic device **300** may also include an MP3 player operable to process the received information into an audio signal. Therefore, electronic device **300** may be used to receive wirelessly communicated MP3 audio files and play these files using an MP3 player when desired.

In another embodiment, electronic device **300** may be configured as a PDA wherein the PDA includes a web browser operable to wirelessly communicate with the Internet. The PDA device may include a user interface allowing a user to select information to be wirelessly communicated to electronic device **300**. By providing a website of selectable information, the PDA devices may provide an efficient embodiment for electronic device **300** in that is allows a user to access and select information using a wireless communication network and receive the selected information using the same or different wireless communication network.

In yet another embodiment, electronic device **300** may be configured as a component operable to receive selective information via wireless communication and communicate the information to a second electronic device such as an automobile sound system, home stereo, etc. For example, electronic device **300** may utilize transceiver **301** to receive wirelessly communicated information. Electronic device **300** may then be coupled to an automobile sound system using an interface and communicate the received information to the automobile sound system. In this manner, electronic device **300** may be used to provide the automobile sound system with audio files received via wireless communication.

In another embodiment, electronic device **300** may be operable to communicate the received audio information to an audio system via a localized communications signaling network. One such network may include utilizing 'Bluetooth' communication standard used to provide communication between electronic devices in a proximal setting.

In one embodiment, electronic device **300** may be integrated into an audio component such as a radio receiver. Electronic device **300** integrated into an audio component may be configured to process digital audio files wirelessly communicated to an audio component.

In another embodiment, electronic device **300** may be operable to communicate with an analog receiver at a predetermined frequency. For example, a specific frequency may be selected (i.e., 93.7 MHz) for communicating the wireless received selected information from electronic device **300** to a localized audio system. Electronic device **300** communication of the wirelessly received information allows a conventional receiver to receive the selected audio information. In one embodiment, the conventional receiver may be configured to receive a digital sub-carrier, on-carrier, or other within a specified frequency. Therefore, electronic device **300** may be operable to locally transmit the signal at a specific frequency thereby allowing the conventional receiver to receive the information.

In another embodiment, electronic device **300** may be operable to scan plural bandwidths to receive the selective information. For example, transceiver **301** may be operable to receive selective information across several frequencies and process the received information accordingly.

In another embodiment, electronic device **300** may be operable to scan several frequencies to obtain the desirable information. For example, a user may select several Internet broadcasts comprised of streaming audio information. Therefore, the information may be transmitted across several wireless frequencies receivable by electronic device **300**. Electronic device **300** may then be operable to allow a user to scan wirelessly communicated Internet broadcast signals thereby providing a user selected virtual broadcast radio network.

In another embodiment, electronic device **300** may include a user interface operable to communicate with a an Internet website operable to display selectable audio information. The Internet website may be configured as a user preferred environment displaying a users selected audio information, Internet broadcast selections, streaming audio selections, etc. With a display device for displaying a Website having selectable information, electronic device **300** may allow a user to select audio information via a user interface and receive the selected information via wireless communication thereby providing a customizable WebRadio device for the user.

In another embodiment, electronic device **300** may be a modular device configured to be coupled to, for example, a portion of a cars interior. For example, electronic device **300** may be mounted to a portion of a car's console thereby providing a removably coupled electronic device operable to wirelessly receive selected audio information. As a removable device, electronic device **300** may be also be coupled to a home audio system, a portable radio system or other systems thereby providing a versatile electronic device operable to receive wirelessly communicated selected audio information.

In another embodiment, electronic device **300** may be operable as a PDA and/or a cellular phone that may be mounted to an automobile's console. Electronic device **300** may then integrate with a user's automobile to provide an all encompassing communications device. For example, electronic device **300** configured as a PDA and cellular phone may allow for communication with a users email account, voice mail account, the Internet, as well as allowing for the receipt of selected audio information via wireless communication. Electronic device **300** may be operable in a hands-free mode allowing a user to maintain safe driving fundamentals. During use, electronic device **300** may be processing selective audio information for communicating with an automobile audio system and may further be operating to receive incoming cellular calls. Electronic device **300** may be set-up by the user to pause the music being played and allow the received cellular call to be communicated either via an independent speaker or utilizing the automobiles audio system. Additionally, electronic device **300** may be operable to adjust the listening level of an automobiles audio system, play received voice mail messages, allow a user to view the Internet, etc.

In one embodiment, electronic device **300** may be operable as a dual mode electronic device capable of receiving both digital and analog wireless communication signals. In

this manner, electronic device may efficiently utilize available bandwidth for receiving selected information from a communications engine. For example, transceiver **301** may be a wireless communications modem operable to receive digital or analog signals.

FIG. **4** illustrates a graphical user interface (GUI) for displaying selectable audio information according to one aspect of the present invention. The GUI may be operable with a computer system, cellular device, PDA, or other electronic devices or systems operable to display the GUI of FIG. **4**.

The GUI, shown generally at **400**, may be displayed using a conventional web browser **402** such as MICROSOFT's INTERNET EXPLORER, a WAP browser, or other browsers operable to display the audio information. Browser **402** includes browser functions, shown collectively at **403**, for navigating a network such as the Internet or an intranet. Homepage **401** may be displayed using browser **402** and may include several functions, features, information, etc. related to audio information. Home page **401** may be developed using several different types of programming (i.e., HTML, XML, Java, etc.) used to developing a network location or web-site. The present invention is not limited to any one specific type of software and may be realized in plurality of ways as can be appreciated by those skilled in the art.

Homepage **401** may also include Log-in region **410** allowing a user to log into homepage **401** and display a user preferred environment. For example, a user may want Radio Dial **412** to appear when a user logs into homepage **401**. In another embodiment, a user may want to view a current playlist selected by the user or the status of wirelessly communicated playlist. A user may also provide demographic information allowing advertisers to access the demographic information and provide advertisements based upon the demographic information. For example, an advertiser may want to target Hispanic females in the 21–25 year old age group. Through providing demographic information to advertisers, when a user logs into homepage **401** selective advertising can be "targeted" for a group of users.

Homepage **401** may also include several tabs for efficiently navigating homepage **401**. Library tab **405** may be provided to allow a user to browse available audio information that may be presented by title, genre, artist, decade, culture, etc. Store tab **407** may also be provided for locating items available for purchase such as CDs, PDA devices, MP3 players, wireless communication hardware, interfaces, software or other types of products that may be purchased while on-line. Chat tab **408** may also be provided allowing a user to chat with other user's of home page **401**. For example, a guest musical artist may be available to chat with visitors of home page **401** via chat page associated with chat tab **408**. Home page **401** may also include contest tab **409** for displaying current contests, prizes, and/or winners.

Radio tab **406** may also be provided for displaying audio information. For example, radio tab **406** may display a collective menu **411** of selectable functions or features associated with audio information. Top ten lists may be provided to a user based on several different billboard polls or genres. A search engine may be provided allowing a user to search for a specific type of audio information such as an artist, song title, genre, Internet radio station, etc. In one embodiment, a user may input the lyrics to a song within the search engine. As such, the search engine may locate several different songs having the desirable lyrics and allow a user to select the search results. A user may also use a select a device feature that allows a user to select a destination device for communicating selected audio information. For example, a user may want to communicate a playlist to several different devices such as a PDA, a home computer system, a work computer system, etc. As such, a user can communicate selective information to several devices without having to download the information separately for each device.

A send a friend link may also be provided allowing a user to send selective audio information to a friend's electronic device. A user may also join a group comprised of individuals that select a certain genre of music to be communicated to the user's electronic device. For example, a user may want to join a group that plays only 50's swing music. As such, the user could communicate the group's selected songs to the user's electronic device. A user may also utilize an email account provided by homepage **401** allowing a user to correspond with others via email. A user may also access a list of guest DJ's that may provide playlists of songs chosen by the guest DJ and selectable by a user.

In one embodiment, a user's radio dial **412** may be provided when a registered user logs into homepage **401**. As such, radio dial **412** may include several functional buttons similar to conventional systems such as a volume control and a station control. However, radio dial **412** surpasses the limitations of conventional systems through providing a programmable radio dial of user customized audio information. Radio dial **412** includes several stations that may be programmed using program interface **413**. The preset stations may include several different types of user customized preset information such as user selected playlists, internet broadcast stations, top 10 lists, group playlists, artist's selected lists, on-line radio station, conventional radio stations, Internet phone, cellular phone, etc. and other functions, features, or information associated with audio information.

Radio dial **412** may also be displayed as a separate user interface and in some embodiments, does not require a 'browsing' environment to view radio dial **412**. For example, an electronic device, such as a PDA, having a display may graphically present radio dial **412** to a user. One example may be using electronic device in association with an automobile audio system. Electronic device may display radio dial **412** and may allow a user to navigate, modify, select, adjust volume, access daytimer, access phone lists, etc. or perform other functions while the electronic device is used in association with an automobile sound system. Therefore, radio dial **412** may be operable as an application for use with several different types of electronic devices (i.e., computer systems, portable computing devices, cellular phones, etc.) operable to display radio dial **412** and in come embodiments may be wirelessly communicated to an electronic device.

In another embodiment, homepage **401** may allow a user to select when to download the information to an electronic device. For example, a user may want to listen to a certain genre of music at a specific time of day thereby allowing a user to select the information. As such, a user may select a different playlist for every day of the week thereby allowing a user to listen to different songs on different days of the week. The user can further identify when the selected playlist should be available for listening. For example, if a user wanted to listen to "playlist #1" on Monday morning during the drive into work between 8:00 am and 9:00 am, the user would enter the time and the day playlist #1 would be available for listening. In this manner, the playlist may be

communicated to the electronic device thereby allowing a user to listen to selective audio information at a desirable time.

FIG. **5A** illustrates a portable radio system having a mount for an electronic device according to one embodiment of the present invention. Portable radio **500** includes a mount **501** operable to receive electronic device **502**. Mount **501** may include a connector operable to provide communications and power to electronic device **502**. During use, electronic device **502** when mounted within portable radio **500** communicates with portable radio to provide remotely received selective audio information.

In one embodiment, electronic device **502** may include a user interface allowing a user to access the Internet. Therefore, selective audio information located on the Internet may be accessed by the user and remotely communicated to electronic device **502** coupled to portable radio **500**.

In another embodiment, portable radio **500** may include memory operably located within for storing downloaded information. For example, portable radio **500** may include 32 MB of RAM allowing electronic device **502** to receive selective information and download the selective information to memory located within portable radio **500**. In this manner, the downloaded music may be operable to be played within portable radio **500** while allowing electronic device to be removed from portable radio **500**.

Therefore, portable radio **500** including electronic device **502** allows a user to communicate selected audio information to portable radio **500**.

FIG. **5B** illustrates automobile console having a mount for coupling an electronic device according to one aspect of the present invention. Console **510** includes mount **511** operable to receive electronic device **512**. Mount **511** may be located in many different locations within an automobile such as coupled to a sun visor, center console, dash board, floor board, etc. Mount **511** allows the user to couple electronic device **512** to the automobile and provide an interface for communication between electronic device **512** and the automobile audio system. Mount **511** may also include a power connection that allows electronic device **512** to use the automobiles power during use. The power connection may also be used in association with a recharging circuit operable to recharge a power supply within the electronic device.

During operation, electronic device **512** coupled to mount **511** may receive selected audio information via wireless communication and communicate the selective information to the automobile audio system. In one embodiment, the automobile may include memory operable associated with the automobile for storing information. The memory may be used in association with mount **511** and electronic device **512** to store the selected audio information. In this manner, voluminous audio information can be stored within the memory allowing electronic device **512** to receive additional information.

In one embodiment, a mount may be provided for a home audio system (not shown) for downloading selected audio information for use with a home audio system. For example, a mount device may be coupled to a home stereo system such that the upon placing an electronic device such as electronic device **500** within the mount, selected audio information may be communicated to the home audio system thereby allowing a home audio system to be used in association with an electronic device.

FIG. **6** illustrates a block diagram of a system for communicating voice mail messages using email according to one embodiment of the present invention. The system, indicated generally at **600**, includes email server **601** coupled to a voice mail storage device **602**. System **600** further includes a computer system or network terminal **603** such as a computer coupled to network **604**. System **600** further includes mount **605** for mounting electronic device **606** for hardwire communication of information. Device **606** may also communicate with network **604** using a wirelessly communication network operably associated with network **604** and coupled, for example, via tower **607**.

During operation, system **600** communicates voice mail messages to a user utilizing email server **601**. For example, if a user receives a voice mail message, email server **601** would be notified and a voice mail message would be sent to the user's email account in the form of an email message. For example, a voice mail message would be sent to a user's email account within intranet **604** in the form of an audio file as an attachment to the email. Upon receiving the email, a user may click on the audio file representing the voice mail message to hear the message left by a caller.

In one embodiment, a user may be accessing the Internet via a phone line and, as such, be unable to receive notification that a voice mail message has been received. System **600** would receive the voice mail message and send an email comprising the voice mail message to the user email account. In this manner, a user can remain connected to the network and receive voice mail without having to log off or disconnect from the Internet.

In one embodiment, a user may receive the voice mail message via a portable electronic device. For example, a user may be using remote device **605** operable to receive wirelessly communicated information. System **600** would receive the voice mail message and forward the voice mail message to a user's portable electronic device **606**. In this manner, a user may be capable of receiving voice emails at remote locations.

In another embodiment, a user may subscribe to use an Internet email account that may be operably associated with system **600**. Utilizing an Internet email account may allow a user the flexibility to check voice email messages from any location in the world. For example, a user may access a "Hotmail" email account while traveling on business in a foreign country. The user, upon gaining access to the "Hotmail" account, would be able to listen to voice mail messages sent to the user via the "Hotmail" email account.

Through utilizing an email account to receive voice mail messages, a user may be afforded great flexibility in communicating voice mail messages. For example, a user may be able to forward a voice mail message received in the form of an email to one or a plurality of other email accounts. In this manner, a voice email message may be sent efficiently to other email users. For example, a user may maintain a distribution list of individuals working on a particular project that may have a need to hear certain voice email messages. In this manner, a user may efficiently disseminate information to other individuals while adding additional textual information to the body of the email allowing a user to comment on the original voice email message.

In another embodiment, a user may forward a received voice email message to another account operable to receive forwarded voice email messages. For example, system **600** may be operable to receive an email message having a voice mail message as an attachment. The system would then be operable to forward the voice mail message to a specified phone number, separate email account, and/or voice mail account, etc. thereby providing a user flexibility in receiving voice email.

In one embodiment, a user may utilize an email account to establish an answering service for voice mails. For

example, a user's telephone number may be operable with an email account to provide an answering service. A user may record a message for a specified phone number or extension and, upon receiving an incoming call, the recorded message may be played back to incoming call's initiator. System **600** would then forward the received voice email message via an email account to the user. For example, a user may have an account set up at a home residence for receiving voicemail messages via a user defined email account. The user could then forward all received voice mails from the home account to an email account at a place of work. Therefore, the user may have complete access to received voicemail messages. In the same manner, a user could set up their work phone number to forward voice email messages to the users home email account thereby allowing a user to receive voice email at a home email account.

Therefore, system **600** may be operable in a plurality of ways to provide email messages comprised of voicemail messages received via a voice mail or email account.

FIG. **7** illustrates a flow chart for providing voice email messages according to one embodiment of the present invention. The method begins at step **701** where a voice mail message is left for a user. The message could be at a residence, place of business, etc. The method then proceeds to step **702** where the message may be stored as an audio file within a database operable to store a file comprised of the voice mail message. Upon storing the file, the method proceeds to step **703** where an electronic mail message may be generated. The electronic mail message may be addressed to the recipient of the voice mail message. The method then proceeds to step **704** where the audio file representing the voice mail message is attached to the electronic message.

Upon attaching the audio file, the method then proceeds to step **705** where the email message may be sent to the email address. Upon sending the email message the method proceeds to step **706** where the method determines if the email message should be sent to a wireless electronic device. If the message is not to be sent to a wireless device, the method proceeds to step **720** where the method ends. If the message is to be sent to a wireless electronic device, the method proceeds to step **707** where a signal may be sent to the wireless electronic device and at step **708** an indication is provided to the electronic device indicating that a voice email message has been received via a user's email account. The method may then proceed to step **709** where the user decides whether or not to listen to the voice email message. If the user decides not to listen to the voice email message, the method may proceed to step **710** where the method ends. If the user decides to listen to the voice email message, the method proceeds to step **711** where a request may be sent by the electronic device requesting the voice email message be forwarded to the user's electronic device. At step **712**, the voice email message may be sent to the user's electronic device. Upon forwarding the voicemail message to the user the method may proceed to step **720** where the method ends.

As such, FIG. **7** depicts one method of providing an email message comprised of a voice mail message. Certainly, other methods may be deployed as advancements in technology are made without departing for the spirit and scope of the present invention.

FIG. **8** illustrates a flow diagram of a method for providing selected audio information to an electronic device according to one embodiment of the present invention. The method begins at step **800** where a user accesses a webpage via the Internet. The webpage may be a home page illustrated in FIG. **4** or other web pages operable to display selectable references to audio information. The method proceeds to step **801** where a user selects desirable audio information. For example, a user may select a single song, a plurality different songs, an entire album, a broadcast station, streaming audio, etc. or other selectable audio information. Upon the user selecting a reference to audio information, the method may proceed to step **802** where a playlist may be created that represents the user's selected audio information. The playlist may be variable in size and comprised of a plurality of different types of available audio information. Upon creating a playlist, the method may proceed to step **803** where information associated with the playlist is obtained. For example, a list of network or URL locations comprised of the desirable audio information may be obtained. In this manner, desirable audio information may be obtained from many different sources such as URLs, network addresses, hard drives, databases comprised of audio information, etc. The sources may be accessed to obtain the selected audio information.

Upon obtaining data associated with the customized playlist, the method may proceed to step **804** where the user is prompted for a destination for the playlist. For example, a user may want to communicate the selected audio information to a remote electronic device, a automobile audio system, a home stereo system, a home computer, an electronic device coupled to a home network or computer system, etc. or other locations or devices operable to receive the selected audio information. In one embodiment, a user may select a device owned by a friend to accept the selected audio information. For example, a husband may want to send a romantic playlist to his wife on their anniversary. In this situation, the husband would select his wife's electronic device as the receiving device for the selected audio information.

Upon selecting a device, the method proceeds to step **805** where the method determines the destination of the selected audio information. If the information is to be sent to a device via a wire line connection, the method proceeds to step **813** where playlist data is sent to a user via a wire line connection. The method may then proceed to step **814** where the playlist is executed at the device. If the information is to be sent to a device requiring wireless communication, the method proceeds to step **806** where the information is formatted for communicating the information to a wireless electronic device. For example, a wireless PDA device may be selected as a destination device for the selected audio information. The PDA device may include an audio player, such as an MP3 player operable to play or execute MP3 audio files. In such an embodiment, the method could format the information such that the information may be wirelessly communicated and subsequently played by the MP3 player.

Upon formatting the information, the method may then proceed to step **807** where the audio information is wirelessly communicated to the selected device. In some embodiments, the device may be operable to receive a limited amount of information based upon storage capacity of the device (i.e., 16 Megabytes). In such a case, the method may divide the information into component parts and periodically communicate the component parts, such as packets, to the electronic device. Upon communicating the audio information, the method may then proceed to step **808** where the signal may be received by the destination or electronic device. The method may then proceed to step **809** where the method determines if all of the audio information has been received. For example, if 16 Mbytes or 32 Mbytes of selected audio information was initially transmitted due to capacity limitations of the selected device, the method may

query the selected device to determine if capacity is available. If available memory exists, the method may proceed to step **807** where the method may communicate additional audio information based upon the amount of available memory. The method repeats until all of the selected audio information has been transmitted.

Upon communicating the selected information, the method may proceed to step **810** where the playlist may be executed at step **812**. For example, a user may select a continuous communication of selected audio information (e.g. several hours of music. Internet broadcast, etc.). As such, the method may continuously play or execute the received audio information. In another embodiment, the method may proceed to step **811** where the method may store or buffer the received information until it is desirable to execute the received selected audio information. As such, upon executing the selected audio information, the method may proceed to step **809** where the method may repeat.

In one embodiment, a user may elect to download a broadcast of an on-line radio station. For example, a user may want to listen to a radio station located in a remote location wherein conventional radio receivers could not receive the desired broadcast. For example, a person living in Houston, Tex. may not be able to receive a radio broadcast signal from a radio station in Seattle, Wash. utilizing a conventional radio receiver. In accordance with the teachings of the present invention, a user may select an on-line broadcast or radio station as all or a part of the selected audio information. The user may then receive radio broadcasts without having to use a home computer system or conventional radio receiver.

At step **804**, a user may select a device that does not require remote communication of information. For example, a user may elect to communicate the selected audio information to device, such as a personal computer, PDA device, MP3 player, etc. coupled via a network connection to the Internet or an Intranet. The user may receive the selected playlist at the determined device for eventual playing. In one embodiment, a user may select a plurality of devices as destination devices for receiving downloads of the selected audio information. For example, the user may want to download the information to a home stereo system, a PDA device, and an automobile stereo. As such, the selected information may be communicated to more than one destination device. In addition, the format of the download may match or conform to the selected destination device(s).

The present invention may be configured in a plurality of ways to communicate desirable audio information to users by allowing users to select desirable audio information and transmitting the desirable audio information to a specified destination thereby allowing a user to receive on-demand customized audio information. Moreover, the download may occur in an off-line environment, allowing a user to enjoy the selected audio information accessed on-line without having to be on-line or utilizing a browsing environment.

In one embodiment of the present invention, the method of FIG. **8** may be modified to allow a user to select a "user group" for receiving customized audio information. For example, a "user group" may include user's that only like to listen to contemporary jazz wherein a user may request a certain song. Therefore, a virtual request line may be created for a specific genre of music allowing "members" to transmit audio information to the "group".

In another embodiment of the present invention, the method may be modified to allow a user to select a specific genre to be transmitted to the users device. For example, a user may elect to have random country and western music transmitted to a destination device. The user could efficiently create a radio station format and have the format received at a destination device.

In a further embodiment, a user may select a group of genres to be downloaded to a desirable device. As such, the method may be modified to allow a user to select several different genres to download random music within the specified genres.

In another embodiment, a user may elect to download the same music as another individual. For example, a user may want to download the same music as their best friend. Therefore the user could elect to download the same music as their friend or group of friends. In another example, a user may want to listen to the same music that an artist listens to on a specific weekday of evening. For example, a user may want to listen to the same music that Barry White listens to on a Saturday night. Therefore, the user may select "Barry White's" Saturday night playlist and receive the same playlist Barry White receives on Saturday night.

In another embodiment, the method of FIG. **8** may be modified to allow a user to manipulate songs post download. For example, a user may want to store, delete, replay, copy, forward, etc. received audio information. Therefore, the method of FIG. **4** may be modified such that a user can manipulate or process the received audio information in a plurality of ways.

In one embodiment of the present invention, an on-line radio station may be provided. For example, the radio station may be created for transmitting audio or on-line broadcasts. The on-line broadcaster's or hosts may create their own format for broadcast. For example, an on-line radio station may be provided that transmits only children's songs. Prior to conception of the present invention, conventional radio stations could not afford to transmit music such as children's songs to conventional radio receivers. The present invention, by providing a medium for transmitting selectable audio information, enables the existence of on-line broadcasting with little or no overhead for a host. A user may select an on-line broadcast for on-line or off-line delivery.

In another embodiment, on-line broadcast of audio information representing books or novels may be provided to individuals such as the visually impaired. For example, an on-line broadcast station may provide several hours of audio information broadcast representing books or novels to be broadcast with very little overhead.

FIG. **9** illustrates an automobile console having a mount for an electronic device according to one embodiment of the present invention. Console **900** includes a conventional audio system **901** comprised of a receiver **902** and CD player **903**. Interface **904** may be coupled to audio system **901** via plug **905** and cable **908**, which may be coupled to an auxiliary line into audio system **901**. Interface **904** may also include contact **906** for contacting electronic device **907**. Cable **908** may be a multiple conductive cable for providing power from the automobiles power system via a protection circuit or fuse **909** for powering electronic device **907**. In one embodiment, interface **904** may be operable to recharge electronic device **907** utilizing a power source associated with an automobile.

During operation, electronic device **907** may be mounted within interface **904**. Electronic device **907** may also be powered or recharged via power line **910** and communicate with the systems audio system via interface cable or bus line **911**. Audio information communicated to electronic device **907** may be transferred to audio system **901** such that a user may listen to selected audio information. For example, a user may have previously selected a plurality of audio files

to be transmitted to electronic device **907**. Electronic device **905** may communicate the selected audio information to the automobiles audio system utilizing interface **901** thereby allowing the user to listen to selected audio information. In one embodiment, cable **908** may be custom installed to audio system **901**. For example, the cable may be coupled to an auxiliary line for the system's radio or may be coupled to CD player line **912**. In another embodiment, a radio manufacturer may provide interface **904** as a standard interface integrated into the audio system thereby allowing communication between electronic device **907**, audio system **901** and/or console **900**.

Electronic device **907** may include a plurality of different types of devices. For example, electronic device **907** may include a PDA device operable to store selected audio information. The information may be either remotely downloaded using an Internet web browser and wireless communication to the PDA device. In another embodiment, selected audio information may communicated to a PDA device via a hard wire coupled to a computer system interfacing with the Internet.

In another embodiment, electronic device **907** may include an audio file player operable to play audio files such as MP3's, etc. The audio files may be remotely or locally communicated to electronic device **907** and upon coupling to audio system **901**, the audio files may be transmitted to audio system **901** in a form receivable by audio system **901**.

Although the disclosed embodiments have been described in detail, it should be understood that various changes, substitutions and alterations can be made to the embodiments without departing from their spirit and scope.

What is claimed is:

1. A cellular communication device comprising:

a cellular communication module configured to receive an incoming telephonic communication;

a memory module configured to store audio information received via a cellular communication network independent of the incoming telephonic communication;

a processor communicatively coupled to the memory module and configured to process the audio information and to output a digital representation of the audio information;

a local rechargeable battery configured to provide power to the processor; and

an interface configured to releasably engage with a docking mechanism of a separate sound system such that: (1) a power supply of the separate sound system can recharge the local rechargeable battery via the interface; (2) the digital representation can be communicated to the separate sound system via the interface; and (3) a control signal of the cellular communication device can alter an operational parameter of the separate sound system in response to the incoming telephonic communication.

2. The device of claim **1**, wherein the operational parameter is a volume level further comprising the processor operable to stop playing of the audio file in response to the incoming telephonic communication.

3. The device of claim **1** further comprising the processor configured to enable a user to alter the processing of the audio information to answer the incoming telephonic communication.

4. The device of claim **1**,

wherein the audio information comprises plural audio files; and

wherein the processor is configured to enable sequential playing of plural audio files.

5. The device of claim **4**, wherein the processor is configured to first play a WAV file and second play an MP3 file.

6. The device of claim **1**, wherein the memory is configured as a buffer and the audio information is a wirelessly streamed version of an on-line radio broadcast.

7. The device of claim **6**, wherein the wirelessly streamed version of the on-line radio broadcast is received via a GSM network.

8. The device of claim **1**, wherein the audio information includes streaming audio information.

9. The device of claim **1**, further comprising the processor being configured to pause output of the digital representation of the audio information in connection with the incoming telephonic communication.

10. The device of claim **9**, further comprising the processor being configured to enable a user to elect to answer and listen to a telephone call in response to the incoming telephonic communication, wherein the telephone call is not listened to via the separate sound system.

11. The device of claim **1**, further comprising the processor being configured to enable a user to elect to answer and listen to a telephone call in response to the incoming telephonic communication, further wherein the interface is configured to allow the user to listen to the telephone call from the separate sound system.

12. The device of claim **11**, wherein a PDA comprises the cellular communication module, the processor, the memory module, the local rechargeable battery, and the interface.

13. The device of claim **1**, wherein a cellular telephone comprises the cellular communication module, the processor, the memory module, the local rechargeable battery, and the interface.

14. The device of claim **1**, further comprising a WAP browser configured to accept the audio information.

15. The device of claim **13**, further comprising the communication module being configured to receive an audio file selected via an Internet website accessed external to the cellular communication device.

16. The device of claim **14**, further comprising a media player configured to play user selected media wirelessly downloaded outside of a web browsing environment.

17. A cellular communication device comprising:

a processor configured to play plural audio information formats;

a communication module configured to receive a wirelessly communicated collection of digital data packets representing a user selected media having a first audio information format;

a display configured to present a user interface that comprises an icon representing a locally stored audio file;

an updateable user interface engine configured to accept an over the air download of an updated user interface file and to utilize the updated user interface file to initiate presentation of a different user interface on the display, wherein the different user interface comprises a new icon representing the user selected media;

a memory operable to store plural audio information formats; and

a Bluetooth communication module communicatively coupled to the processor such that a played audio information format can be communicated to a wireless speaker.

18. The device of claim **17**, further comprising:

output means for providing an audio output;

input means for selecting the audio file; and

browsing means for viewing available preformatted audio and media files.

19. The device of claim **17**, further comprising a removable memory device operable to store at least one audio file.

20. A method for managing audio outputs for a cellular communication device comprising:

generating a user interface file that can be processed to present a user interface on a cellular device, wherein the user interface comprises an icon linked to a selected audio information source;

initiating an over the air download of the user interface file;

communicating the user interface file to the cellular telephone via a wide area wireless network;

processing the user interface file to present the user interface on the cellular device;

initiating a playing of audio information by selecting the icon;

detecting an incoming cellular telephone call; and

altering playing of the audio information in connection with a detecting of the cellular telephone call.

21. The method of claim **20**, further comprising playing a second audio file stored within a memory of the cellular device.

22. The method of claim **21**, further comprising:

receiving the second audio file independent of the incoming cellular telephone call;

storing the second audio file within the memory; and

playing the second audio file after detecting the incoming cellular telephone call.

23. The method of claim **20**, further comprising playing a second audio file received via a non-wireless communication network.

24. The method of claim **20**, further comprising:

enabling access to a streaming media source in response to a selection of the icon;

detecting selection of the icon; and

receiving a wirelessly communicated collection of data packets representing a media stream output by the streaming media source.

25. The method of claim **24**, further comprising

playing the wirelessly communicated collection of data packets in order to present the media stream; and

altering the playing in response to receiving the cellular telephone call.

26. The method of claim **24**, further comprising outputting a playing of the wirelessly communicated collection of data packets such that the media stream is presented via an automobile entertainment system.

27. The method of claim **24**, wherein the media stream comprises a video stream.

28. The method of claim **24**, wherein the media stream comprises streaming audio.

29. A wireless communication system comprising:

an Internet website provided in association with a cellular communication device configured to receive and play audio information, the Internet website configured to present a user with an application that allows the user to create a user interface for the cellular communication device;

a wireless communication network configured to communicate a launchable interface file to the cellular communication device such that the user interface is presented on a display of the cellular communication device;

a wireless network element configured to receive a signal indicating that the user has selected an icon on the user interface and to initiate wireless communication of data packets to the cellular communication in response to the signal; and

a digital engine operable to determine availability of the cellular communication device and to communicate the data packets to the cellular communication device.

30. The system of claim **29**, further comprising the Internet website being configured to present a user login page and to link a particular user to a particular cellular communication device.

31. The system of claim **30**, further comprising the Internet website being configured to provide access to downloadable software that can be wirelessly communicated to the cellular communication device.

32. The system of claim **29**, further comprising the cellular communication device, wherein the cellular communication device is configured to alter playing of the audio file in response to receiving a telephone communication communicated via the wireless communication network.

33. The system of claim **29**, further comprising the Internet website presenting a link to a selectable preformatted audio file operable to be communicated to an identified cellular communication device.

34. The system of claim **29**, wherein the user interface includes a list of selectable categories, wherein the list of selectable categories includes at least two of:

genre;

artist;

most popular;

newest;

most viewed; and

favorites.

35. The system of claim **29**, further comprising the digital engine being configured to communicate data packets that represent streaming audio information.

36. The system of claim **35** further comprising the digital engine being configured to communicate data packets that represent streaming video information.

37. The system of claim **30**, wherein the audio file may be communicated to the wireless communication device independent of a user being logged into the Internet website.

38. The system of claim **29**, further comprising the user interface being configured to enable access to a WAP enabled Internet website that is communicatively coupled to the digital engine.

39. The system of claim **29**, further comprising the digital engine being configured to provide access to a broadcast.

40. The system of claim **39**, further comprising the digital engine being configured to provide access to an on-line video broadcast.

41. The system of claim **39**, further comprising the digital engine being configured to provide access to an on-line radio broadcast.

42. The system of claim **39**, wherein the cellular communication device is configured to alter playing of an accessed broadcast in response to an incoming cellular telephone call.

* * * * *

US007187947C1

(12) INTER PARTES REEXAMINATION CERTIFICATE (1170th)

United States Patent

White et al.

(10) Number: US 7,187,947 C1

(45) Certificate Issued: Sep. 21, 2015

(54) **SYSTEM AND METHOD FOR COMMUNICATING SELECTED INFORMATION TO AN ELECTRONIC DEVICE**

(75) Inventors: **Russell W. White**, Austin, TX (US); **Kevin R. Imes**, Pflugerville, TX (US)

(73) Assignee: **AFFINITY LABS OF TEXAS, LLC**, Austin, TX (US)

Reexamination Request:
No. 95/001,262, Nov. 13, 2009

No. 90/011,254, Sep. 23, 2010

Reexamination Certificate for:

Patent No.:	**7,187,947**
Issued:	**Mar. 6, 2007**
Appl. No.:	**09/537,812**
Filed:	**Mar. 28, 2000**

(51) **Int. Cl.**

H04Q 7/20	(2006.01)
H04M 1/725	(2006.01)
H04M 1/247	(2006.01)

(52) **U.S. Cl.**
CPC ***H04M 1/72558*** (2013.01); ***H04M 1/2478*** (2013.01)

(58) **Field of Classification Search**
None
See application file for complete search history.

(56) **References Cited**

To view the complete listing of prior art documents cited during the proceedings for Reexamination Control Numbers 95/001,262 and 90/011,254, please refer to the USPTO's public Patent Application Information Retrieval (PAIR) system under the Display References tab.

Primary Examiner — Colin LaRose

(57) **ABSTRACT**

Disclosed are a system and method for communicating selected information to an electronic device. The disclosed system may include a digital engine operable to maintain data representing the selected information in a digital format. In some embodiments, the digital engine may be communicatively coupled to a graphical user interface that allows a user to identify the selected information. The system may also include a communication engine communicatively coupled to the digital engine, the communication engine may be operable to wirelessly communicate the data representing the selected information to an electronic device.

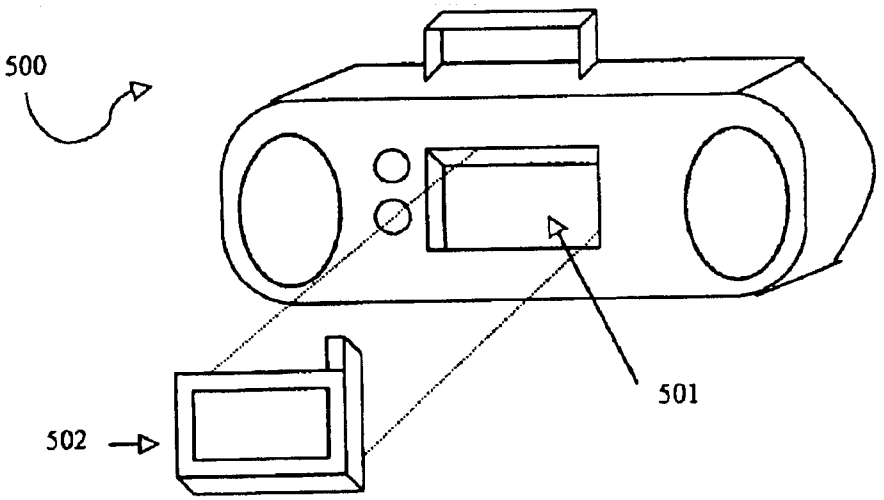

INTER PARTES REEXAMINATION CERTIFICATE

THE PATENT IS HEREBY AMENDED AS INDICATED BELOW.

Matter enclosed in heavy brackets [ ] appeared in the patent, but has been deleted and is no longer a part of the patent; matter printed in italics indicates additions made to the patent.

AS A RESULT OF REEXAMINATION, IT HAS BEEN DETERMINED THAT:

Claims **1-42** are cancelled.

New claim **43** is added and determined to be patentable.

43. The device of claim 17, further comprising:

an interface configured to releasable engage with a docking mechanism of a separate sound system such that: (1) a power source of the separate sound system can recharge a power supply of the cellular communication device via the interface: and (2) the played audio information format can be communicated to the separate sound system via the interface.

* * * * *

Exhibit B

US007634228B2

(12) **United States Patent**
White et al.

(10) **Patent No.: US 7,634,228 B2**
(45) **Date of Patent: *Dec. 15, 2009**

(54) **CONTENT DELIVERY SYSTEM AND METHOD**

(75) Inventors: **Russell W. White**, Austin, TX (US); **Kevin R. Imes**, Austin, TX (US)

(73) Assignee: **Affinity Labs of Texas, LLC**, Austin, TX (US)

(*) Notice: Subject to any disclaimer, the term of this patent is extended or adjusted under 35 U.S.C. 154(b) by 484 days.

This patent is subject to a terminal disclaimer.

(21) Appl. No.: **11/681,444**

(22) Filed: **Mar. 2, 2007**

(65) **Prior Publication Data**

US 2007/0149115 A1 Jun. 28, 2007

Related U.S. Application Data

(63) Continuation of application No. 09/537,812, filed on Mar. 28, 2000, now Pat. No. 7,187,947.

(51) **Int. Cl.**
H04H 40/00 (2008.01)

(52) **U.S. Cl.** **455/3.06**; 455/3.05; 455/556.1; 455/557; 455/566

(58) **Field of Classification Search** 455/3.05, 455/3.06, 3.03, 3.04, 556.1, 556.2, 414.1, 455/414.2, 418, 419, 420, 414.3, 557, 66.1, 455/517, 550.1, 573, 574, 185.1; 725/87, 725/135, 126, 62; 379/211.01, 211.02; 709/217, 709/219, 223, 228, 203, 225, 226, 229, 230, 709/231, 232, 236; 707/501.1, 513
See application file for complete search history.

(56) **References Cited**

U.S. PATENT DOCUMENTS

3,582,926 A 6/1971 Hassan
4,291,749 A 9/1981 Ootsuka et al.
4,314,232 A 2/1982 Tsunoda
4,337,821 A 7/1982 Saito
4,401,848 A 8/1983 Tsunoda
4,407,564 A 10/1983 Ellis
4,419,730 A 12/1983 Ito et al.
4,441,405 A 4/1984 Takeuchi

(Continued)

FOREIGN PATENT DOCUMENTS

CA 2225910 12/1997

(Continued)

OTHER PUBLICATIONS

J. Braunstein, "Airbag Technology Takes Off," Automotive & Transportation Interiors, Aug. 1996, p. 16.

(Continued)

Primary Examiner—Jean A Gelin

(57) **ABSTRACT**

A media managing method is disclosed. A method links a graphical interface soft button with a media file saved in a memory system of a portable electronic device, maintains a collection of information that represents the graphical interface soft button in the memory system, and communicates at least some of the collection to a different electronic device in order to allow a user to view a representation of the graphical interface soft button on an associated display of the different electronic device. The method further receives a signal to begin playing the media file in response to a selection of the representation.

30 Claims, 9 Drawing Sheets

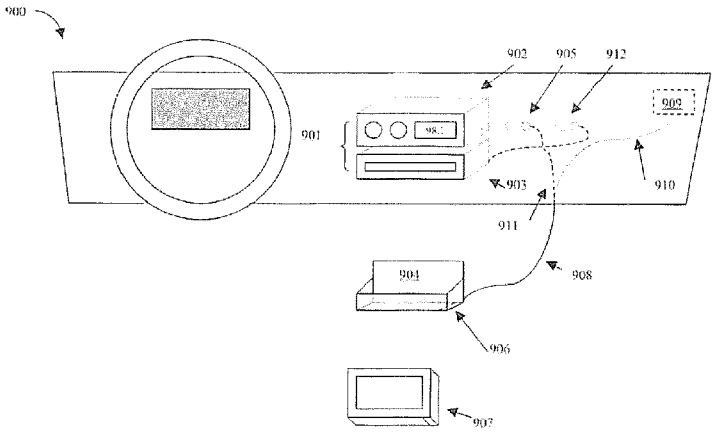

U.S. PATENT DOCUMENTS

4,481,584	A		11/1984	Holland
4,536,739	A		8/1985	Nobuta
4,570,217	A		2/1986	Allen et al.
4,582,389	A		4/1986	Wood et al.
4,636,782	A		1/1987	Nakamura et al.
4,716,458	A		12/1987	Heitzman et al.
4,731,769	A		3/1988	Schaefer
4,740,779	A		4/1988	Cleary et al.
4,740,780	A		4/1988	Brown et al.
4,752,824	A		6/1988	Moore
4,795,223	A		1/1989	Moss
4,802,492	A		2/1989	Grunstein
4,807,292	A		2/1989	Sorscher
4,809,177	A		2/1989	Windle et al.
4,812,843	A		3/1989	Champion, III et al.
4,817,203	A		3/1989	Tsurumoto et al.
4,818,048	A		4/1989	Moss
4,827,520	A		5/1989	Zeinstra
4,837,551	A		6/1989	Iino
4,876,594	A		10/1989	Schiffman
4,905,272	A		2/1990	Van de Mortel et al.
4,914,705	A		4/1990	Nigawara
4,977,509	A		12/1990	Pitchford et al.
4,988,976	A		1/1991	Lu
4,995,258	A		2/1991	Frank
4,996,959	A		3/1991	Akimoto
4,999,622	A		3/1991	Amano et al.
5,006,829	A		4/1991	Miyamoto et al.
5,051,735	A		9/1991	Furukawa
5,070,323	A		12/1991	Iino et al.
5,124,915	A		6/1992	Krenzel
5,164,904	A		11/1992	Sumner
5,179,385	A		1/1993	O'Loughlin et al.
5,198,797	A		3/1993	Daidoji
5,203,499	A		4/1993	Knittel
5,214,413	A		5/1993	Okabayashi et al.
5,214,707	A		5/1993	Fujimoto et al.
5,214,793	A		5/1993	Conway et al.
5,239,700	A		8/1993	Guenther et al.
5,257,190	A		10/1993	Crane
5,270,689	A		12/1993	Hermann
5,274,560	A		12/1993	LaRue
5,278,532	A		1/1994	Hegg et al.
5,293,115	A		3/1994	Swanson
5,299,132	A		3/1994	Wortham
5,307,326	A		4/1994	Osawa
5,327,558	A		7/1994	Burke et al.
5,335,743	A		8/1994	Gillbrand et al.
5,345,817	A		9/1994	Grenn et al.
5,351,041	A		9/1994	Ikata et al.
5,361,165	A		11/1994	Stringfellow et al.
5,363,355	A		11/1994	Takagi
5,371,510	A		12/1994	Miyauchi et al.
5,388,248	A		2/1995	Robinson et al.
5,400,045	A		3/1995	Aoki
5,400,246	A		3/1995	Wilson et al.
5,404,443	A		4/1995	Hirata
5,408,686	A		4/1995	Mankovitz
5,410,326	A		4/1995	Goldstein
5,414,439	A		5/1995	Groves et al.
5,416,318	A		5/1995	Hegyi
5,418,962	A		5/1995	Bodin et al.
5,420,573	A		5/1995	Tanaka et al.
5,422,565	A		6/1995	Swanson
5,432,904	A		7/1995	Wong
5,440,428	A		8/1995	Hegg et al.
5,442,553	A		8/1995	Parrillo
5,442,557	A		8/1995	Kaneko
5,450,321	A		9/1995	Crane
5,450,471	A		9/1995	Hanawa et al.
5,450,613	A		9/1995	Takahara et al.
5,475,399	A		12/1995	Borsuk
5,475,835	A		12/1995	Hickey
5,479,157	A		12/1995	Suman et al.
5,483,632	A		1/1996	Kuwamoto et al.
5,486,840	A		1/1996	Borrego et al.
5,488,357	A		1/1996	Sato et al.
5,493,658	A		2/1996	Chiang et al.
5,497,271	A		3/1996	Mulvanny et al.
5,504,482	A		4/1996	Schreder
5,504,622	A		4/1996	Oikawa et al.
5,506,595	A		4/1996	Fukano et al.
5,511,724	A		4/1996	Freiberger et al.
5,519,410	A		5/1996	Smalanskas et al.
5,523,559	A		6/1996	Swanson
5,524,051	A		6/1996	Ryan
5,525,977	A		6/1996	Suman
5,528,248	A		6/1996	Steiner et al.
5,528,496	A		6/1996	Brauer et al.
5,532,684	A		7/1996	Katsu
5,534,888	A		7/1996	Lebby et al.
5,539,645	A		7/1996	Mandhyan et al.
5,539,658	A	*	7/1996	McCullough 715/730
5,539,869	A		7/1996	Spoto et al.
5,543,789	A		8/1996	Behr et al.
5,547,125	A		8/1996	Hennessee et al.
5,553,661	A		9/1996	Beyerlein et al.
5,555,172	A		9/1996	Potter
5,555,286	A		9/1996	Tendler
5,555,502	A		9/1996	Opel
5,557,541	A		9/1996	Schulhof et al.
5,568,390	A		10/1996	Hirota et al.
5,576,724	A		11/1996	Fukatsu et al.
5,586,090	A		12/1996	Otte
5,587,560	A		12/1996	Crooks et al.
5,594,709	A		1/1997	Nagano et al.
5,594,779	A		1/1997	Goodman
5,596,319	A		1/1997	Spry
5,604,676	A		2/1997	Penzias
5,614,895	A		3/1997	Ohomori et al.
5,616,876	A		4/1997	Cluts
5,619,412	A		4/1997	Hapka
5,621,252	A		4/1997	Bucknam
5,625,608	A		4/1997	Grewe et al.
5,625,668	A		4/1997	Loomis et al.
5,627,547	A		5/1997	Ramaswamy et al.
5,638,305	A		6/1997	Kobayashi et al.
5,639,305	A		6/1997	Brown et al.
5,646,608	A		7/1997	Shintani
5,650,929	A		7/1997	Potter et al.
5,653,386	A		8/1997	Hennessee et al.
5,654,715	A		8/1997	Hayashikura et al.
5,657,221	A		8/1997	Warman et al.
5,661,652	A		8/1997	Sprague et al.
5,664,228	A		9/1997	Mital
5,666,102	A		9/1997	Lahiff
5,670,953	A		9/1997	Satoh et al.
5,677,837	A		10/1997	Reynolds
5,682,525	A		10/1997	Bouve et al.
5,684,490	A		11/1997	Young et al.
5,691,695	A		11/1997	Lahiff
5,694,120	A		12/1997	Indekeu et al.
5,699,056	A		12/1997	Yoshida
5,699,255	A		12/1997	Ellis et al.
5,702,165	A		12/1997	Koibuchi
5,712,640	A		1/1998	Andou et al.
5,715,474	A		2/1998	Burke et al.
5,721,827	A		2/1998	Logan et al.
5,732,216	A		3/1998	Logan et al.
5,734,973	A		3/1998	Honda
5,742,226	A		4/1998	Szabo et al.
5,742,893	A		4/1998	Frank
5,752,754	A		5/1998	Amitani et al.
5,754,774	A		5/1998	Bittinger et al.

5,754,775	A	5/1998	Adamson et al.	
5,757,359	A	5/1998	Morimoto et al.	
5,758,311	A	5/1998	Tsuji et al.	
5,760,742	A	6/1998	Branch et al.	
5,772,534	A	6/1998	Dudley	
5,774,070	A	6/1998	Rendon	
5,774,793	A	6/1998	Cooper et al.	
5,774,827	A	6/1998	Smith, Jr. et al.	
5,777,394	A	7/1998	Arold	
5,790,973	A	8/1998	Blaker et al.	
5,790,974	A	8/1998	Tognazzini	
5,794,164	A	8/1998	Beckert et al.	
5,798,759	A	8/1998	Dahl	
5,806,018	A	9/1998	Smith et al.	
5,808,566	A	9/1998	Behr et al.	
5,812,870	A	9/1998	Kikinis et al.	
5,819,160	A	10/1998	Foladare et al.	
5,822,098	A	10/1998	Morgaine	
5,835,732	A	11/1998	Kikinis et al.	
5,839,108	A	11/1998	Daberko et al.	
5,864,305	A	1/1999	Rosenquist	
5,867,494	A	2/1999	Krishnaswamy et al.	
5,870,680	A	2/1999	Guerlin et al.	
5,875,412	A	2/1999	Sulich et al.	
5,878,282	A	3/1999	Mital	
5,900,564	A	5/1999	Kurakake	
5,908,464	A	6/1999	Kishigami et al.	
5,917,405	A	6/1999	Joao	
5,919,239	A	7/1999	Fraker et al.	
5,919,246	A	7/1999	Waizmann et al.	
5,926,624	A	7/1999	Katz et al.	
5,940,767	A	8/1999	Bourgeois et al.	
5,953,005	A	9/1999	Liu	
5,953,657	A	9/1999	Ghisler	
5,956,029	A	9/1999	Okada et al.	
5,969,283	A	10/1999	Looney et al.	
5,969,826	A	10/1999	Dash et al.	
5,982,298	A	11/1999	Lappenbusch et al.	
5,987,381	A	11/1999	Oshizawa	
5,987,394	A	11/1999	Takakura et al.	
5,990,803	A	11/1999	Park	
5,999,525	A	12/1999	Krishnaswamy et al.	
5,999,877	A	12/1999	Takahashi et al.	
6,006,115	A *	12/1999	Wingate	455/575.2
6,006,161	A	12/1999	Katou	
6,009,355	A	12/1999	Obradovich et al.	
6,014,569	A	1/2000	Bottum	
6,014,689	A	1/2000	Budge et al.	
6,018,571	A	1/2000	Langlois et al.	
6,023,241	A	2/2000	Clapper	
6,029,064	A	2/2000	Farris et al.	
6,032,089	A	2/2000	Buckley	
6,041,023	A	3/2000	Lakhansingh	
6,047,234	A	4/2000	Cherveny et al.	
6,047,327	A	4/2000	Tso et al.	
6,055,478	A	4/2000	Heron	
6,061,306	A	5/2000	Buchheim	
6,084,584	A	7/2000	Nahi et al.	
6,088,730	A	7/2000	Kato et al.	
6,100,884	A	8/2000	Tomita et al.	
6,104,334	A	8/2000	Allport	
6,114,970	A	9/2000	Kirson et al.	
6,115,669	A	9/2000	Watanabe et al.	
6,121,282	A	9/2000	Dominianni et al.	
6,122,403	A	9/2000	Rhoads	
6,128,559	A	10/2000	Saitou et al.	
6,131,060	A	10/2000	Obradovich et al.	
6,133,853	A	10/2000	Obradovich et al.	
6,144,358	A	11/2000	Narayanaswamy et al.	
6,144,848	A	11/2000	Walsh et al.	
6,147,938	A	11/2000	Ogawa et al.	
6,148,261	A	11/2000	Obradovich et al.	
6,150,925	A	11/2000	Casazza	
6,157,725	A	12/2000	Becker	
6,161,071	A	12/2000	Shuman et al.	
6,163,079	A	12/2000	Miyazaki et al.	
6,163,711	A	12/2000	Juntunen et al.	
6,167,253	A	12/2000	Farris et al.	
6,169,515	B1	1/2001	Mannings et al.	
6,175,782	B1	1/2001	Obradovich et al.	
6,175,789	B1	1/2001	Beckert et al.	
6,178,403	B1	1/2001	Detlef	
6,178,514	B1 *	1/2001	Wood	713/300
6,182,006	B1	1/2001	Meek	
6,185,491	B1	2/2001	Gray et al.	
6,189,057	B1	2/2001	Schwanz et al.	
6,192,340	B1	2/2001	Abecassis	
6,196,846	B1	3/2001	Berger et al.	
6,199,076	B1	3/2001	Logan et al.	
6,201,540	B1	3/2001	Gallup et al.	
6,202,008	B1	3/2001	Beckert et al.	
6,225,984	B1	5/2001	Crawford	
6,230,322	B1	5/2001	Saib et al.	
6,232,539	B1	5/2001	Looney et al.	
6,233,430	B1	5/2001	Helferich	
6,236,832	B1	5/2001	Ito	
6,236,918	B1	5/2001	Sonoda et al.	
6,240,297	B1	5/2001	Jadoul	
6,240,347	B1	5/2001	Everhart et al.	
6,243,725	B1	6/2001	Hempleman et al.	
6,246,935	B1	6/2001	Buckley	
6,247,130	B1	6/2001	Fritsch	
6,253,061	B1	6/2001	Helferich	
6,255,961	B1	7/2001	Van Ryzin et al.	
6,262,724	B1	7/2001	Crow et al.	
6,275,231	B1	8/2001	Obradovich	
6,278,531	B1	8/2001	Tesavis	
6,278,676	B1	8/2001	Anderson et al.	
6,282,464	B1	8/2001	Obradovich	
6,289,382	B1	9/2001	Bowman-Amuah	
6,292,440	B1	9/2001	Lee	
6,292,743	B1	9/2001	Pu et al.	
6,301,116	B1	10/2001	Tamura	
6,314,094	B1	11/2001	Boys	
6,314,326	B1	11/2001	Fuchu	
6,332,163	B1	12/2001	Bowman-Amuah	
6,335,927	B1	1/2002	Elliott et al.	
6,339,706	B1	1/2002	Tillgren et al.	
6,339,832	B1	1/2002	Bowman-Amuah	
6,344,861	B1	2/2002	Naughton et al.	
6,349,352	B1	2/2002	Lea	
6,363,240	B2	3/2002	Ito	
6,377,825	B1	4/2002	Kennedy et al.	
6,396,164	B1	5/2002	Barnea et al.	
6,396,769	B1	5/2002	Polany	
6,401,085	B1	6/2002	Gershman et al.	
6,407,750	B1	6/2002	Gioscia et al.	
6,418,138	B1	7/2002	Cerf et al.	
6,418,421	B1	7/2002	Hurtado et al.	
6,420,975	B1	7/2002	DeLine et al.	
6,421,305	B1	7/2002	Gioscia et al.	
6,422,941	B1	7/2002	Thorner et al.	
6,425,018	B1	7/2002	Kaganas et al.	
6,434,459	B2	8/2002	Wong et al.	
6,434,568	B1	8/2002	Bowman-Amuah	
6,434,628	B1	8/2002	Bowman-Amuah	
6,438,594	B1	8/2002	Bowman-Amuah	
6,442,748	B1	8/2002	Bowman-Amuah	
6,446,080	B1	9/2002	Van Ryzin et al.	
6,449,541	B1	9/2002	Goldberg et al.	
6,456,892	B1	9/2002	Dara-Abrams et al.	
6,476,825	B1	11/2002	Croy et al.	
6,477,580	B1	11/2002	Bowman-Amuah	
6,477,665	B1	11/2002	Bowman-Amuah	
6,493,546	B2	12/2002	Patsiokas	
6,496,205	B1	12/2002	White et al.	

6,496,692	B1	12/2002	Shanahan
6,496,850	B1	12/2002	Bowman-Amuah
6,501,832	B1	12/2002	Saylor et al.
6,502,213	B1	12/2002	Bowman-Amuah
6,507,762	B1	1/2003	Amro et al.
6,509,716	B2	1/2003	Yi
6,510,210	B1	1/2003	Baughan
6,516,466	B1	2/2003	Jackson
6,526,335	B1	2/2003	Treyz et al.
6,529,909	B1	3/2003	Bowman-Amuah
6,529,948	B1	3/2003	Bowman-Amuah
6,539,396	B1	3/2003	Bowman-Amuah
6,549,942	B1	4/2003	Janky et al.
6,549,949	B1	4/2003	Bowman-Amuah
6,550,057	B1	4/2003	Bowman-Amuah
6,559,773	B1	5/2003	Berry
6,571,282	B1	5/2003	Bowman-Amuah
6,578,068	B1	6/2003	Bowman-Amuah
6,584,403	B2	6/2003	Bunn
6,587,835	B1	7/2003	Treyz et al.
6,591,085	B1	7/2003	Grady
6,594,723	B1	7/2003	Chapman et al.
6,594,740	B1	7/2003	Fukuda
6,594,774	B1	7/2003	Chapman et al.
6,601,192	B1	7/2003	Bowman-Amuah
6,601,234	B1	7/2003	Bowman-Amuah
6,606,082	B1	8/2003	Zuberec et al.
6,606,660	B1	8/2003	Bowman-Amuah
6,606,744	B1	8/2003	Mikurak
6,615,199	B1	9/2003	Bowman-Amuah
6,615,253	B1	9/2003	Bowman-Amuah
6,618,039	B1	9/2003	Grant et al.
6,622,083	B1	9/2003	Knockeart et al.
6,629,000	B1	9/2003	Moon et al.
6,629,197	B1	9/2003	Bhogal et al.
6,636,242	B2	10/2003	Bowman-Amuah
6,639,584	B1	10/2003	Li
6,640,238	B1	10/2003	Bowman-Amuah
6,640,244	B1	10/2003	Bowman-Amuah
6,640,249	B1	10/2003	Bowman-Amuah
6,640,306	B1	10/2003	Tone et al.
6,671,567	B1	12/2003	Dwyer et al.
6,671,715	B1	12/2003	Langseth et al.
6,671,745	B1	12/2003	Mathur et al.
6,671,818	B1	12/2003	Mikurak
6,694,200	B1	2/2004	Naim
6,697,824	B1	2/2004	Bowman-Amuah
6,697,944	B1	2/2004	Jones et al.
6,704,394	B1	3/2004	Kambhatla et al.
6,707,889	B1	3/2004	Saylor et al.
6,708,086	B2	3/2004	Richard
6,715,145	B1	3/2004	Bowman-Amuah
6,721,489	B1	4/2004	Benyamin et al.
6,721,710	B1	4/2004	Lueck
6,725,022	B1	4/2004	Clayton et al.
6,731,625	B1	5/2004	Eastep et al.
6,741,980	B1	5/2004	Langseth et al.
6,742,015	B1	5/2004	Bowman-Amuah
6,754,181	B1	6/2004	Elliott et al.
6,760,916	B2	7/2004	Holtz et al.
6,772,212	B1	8/2004	Lau et al.
6,788,528	B2	9/2004	Enners et al.
6,791,907	B2	9/2004	Berhan
6,792,086	B1	9/2004	Saylor et al.
6,792,263	B1	9/2004	Kite
6,792,615	B1	9/2004	Rowe et al.
6,832,316	B1	12/2004	Sibert
6,842,906	B1	1/2005	Bowman-Amuah
6,845,398	B1 *	1/2005	Galensky et al. 709/231
6,862,357	B1	3/2005	Albus et al.
6,888,927	B1	5/2005	Cruickshank et al.
6,888,929	B1	5/2005	Saylor et al.
6,892,067	B1	5/2005	Sharma et al.
6,901,067	B1	5/2005	Kalavade
6,904,449	B1	6/2005	Quinones
6,907,112	B1	6/2005	Guedalia et al.
6,909,708	B1	6/2005	Krishnaswamy et al.
6,915,272	B1	7/2005	Zilliacus et al.
6,956,833	B1	10/2005	Yukie et al.
6,963,783	B1	11/2005	Bi et al.
6,963,784	B1	11/2005	Gibbs
6,975,835	B1	12/2005	Lake et al.
6,978,127	B1	12/2005	Bulthuis et al.
6,990,208	B1	1/2006	Lau et al.
6,990,334	B1	1/2006	Ito
7,013,151	B2	3/2006	Hirokawa
7,020,704	B1	3/2006	Lipscomb et al.
7,058,376	B2	6/2006	Logan et al.
7,065,342	B1 *	6/2006	Rolf 455/412.1
7,085,710	B1	8/2006	Beckert et al.
7,120,462	B2	10/2006	Kumar
7,124,101	B1	10/2006	Mikurak
7,130,807	B1	10/2006	Mikurak
7,145,898	B1	12/2006	Elliott
7,149,772	B1	12/2006	Kalavade
7,200,357	B2	4/2007	Janik et al.
7,209,943	B1	4/2007	Ching et al.
7,219,123	B1	5/2007	Fiechter et al.
7,321,923	B1	1/2008	Rosenberg et al.
7,324,833	B2	1/2008	White et al.
7,343,414	B2	3/2008	Lipscomb et al.
7,346,687	B2	3/2008	Lipscomb et al.
7,379,541	B2	5/2008	Iggulden et al.
7,437,485	B1	10/2008	Kruglikov et al.
7,440,772	B2	10/2008	White et al.
2002/0023028	A1	2/2002	Quarendon et al.
2002/0026442	A1	2/2002	Lipscomb et al.
2002/0046084	A1	4/2002	Steele et al.
2002/0058475	A1	5/2002	Patsiokas
2002/0060701	A1	5/2002	Naughton et al.
2002/0072818	A1	6/2002	Moon et al.
2002/0144271	A1	10/2002	Behagen et al.
2003/0008646	A1	1/2003	Shanahan
2003/0105718	A1	6/2003	Hurtado et al.
2003/0126335	A1 *	7/2003	Silvester 710/303
2003/0163486	A1	8/2003	Van Der Meulen
2003/0215102	A1	11/2003	Marlowe
2004/0078274	A1	4/2004	Aarnio
2004/0151327	A1	8/2004	Marlow
2004/0210765	A1	10/2004	Erickson
2005/0010633	A1	1/2005	Shanahan
2005/0049002	A1	3/2005	White et al.
2005/0054379	A1	3/2005	Cao et al.
2005/0096018	A1	5/2005	White et al.
2005/0282600	A1	12/2005	Paradice
2006/0039263	A1	2/2006	Trotabas
2006/0080741	A1	4/2006	Nair
2006/0094349	A1	5/2006	Slesak et al.
2006/0105804	A1	5/2006	Kumar
2006/0206493	A1	9/2006	Lipscomb et al.
2007/0150963	A1	6/2007	Lee et al.

FOREIGN PATENT DOCUMENTS

CN	1218258	A	6/1999
CN	1218258	A	6/1999
DE	4431070		3/1996
DE	19 651 308	A1	10/1996
DE	102 05 641 A 1		2/2002
DE	44 31 070	B4	7/2004
DE	20 2004 013 65		12/2004
EP	0 569 343	A1	10/1993
EP	0569243		11/1993
EP	0 661 676	A1	12/1994
EP	0 675 341	A1	4/1995
EP	0675341		10/1995

EP	0 771 686	A2	7/1997
EP	0 920 016	A2	2/1999
EP	0 918 408	A2	5/1999
EP	0 982 732	A1	1/2000
EP	0982732	A1	1/2000
EP	1 146 674	A2	10/2001
JP	59085599		5/1984
JP	63-136828		6/1988
JP	63136828		6/1988
JP	1018712		1/1989
JP	2-301330		12/1990
JP	3056721		3/1991
JP	H4-261576		9/1992
JP	5077679		3/1993
JP	5-294250		11/1993
JP	6-187597		7/1994
JP	6289118		10/1994
JP	6294659		10/1994
JP	7036382		2/1995
JP	07-129895		5/1995
JP	07-146155		6/1995
JP	7-262493		10/1995
JP	7270171		10/1995
JP	8-79814		3/1996
JP	8-110231		4/1996
JP	9-50282		2/1997
JP	9-61514		3/1997
JP	9-74580		3/1997
JP	10-103966		4/1998
JP	10-143349		5/1998
JP	10-149182		6/1998
JP	10-173737		6/1998
JP	1998-052033		9/1998
JP	11-68685		3/1999
JP	11-73192		3/1999
JP	1168685		3/1999
JP	2901445		3/1999
JP	11-96735		4/1999
JP	11-143791		5/1999
JP	1999-0033393		5/1999
JP	1999-0042565		6/1999
JP	11-219580		8/1999
JP	11-068685		9/1999
JP	11-242686		9/1999
JP	H11-242686		9/1999
JP	11219580	A	10/1999
JP	11-317061		11/1999
JP	H11-317061		11/1999
JP	2000-0001465		1/2000
JP	2000-66974		3/2000
JP	2001-0009302		2/2001
JP	2001-0028354		4/2001
JP	2001-128280		5/2001
JP	10-356742		10/2002
JP	3890692		12/2006
JP	2007-207257		8/2007
KR	10-1997-0016743		4/1997
KR	20-1997-0012254		5/1997
KR	0142256		3/1998
KR	2019990022030	U	6/1999
KR	1999-0048723		7/1999
KR	1999-0055970		7/1999
KR	1999-0073234		10/1999
KR	100242563	B1	10/1999
KR	2000-0001465		1/2000
KR	20000036680		7/2000
KR	10-0356742		10/2002
WO	WO 94/18763		8/1994
WO	WO 96/04724		2/1996
WO	WO 96/07110		3/1996
WO	WO 97/13657		4/1997
WO	WO 98/21672		5/1998
WO	WO 98/19480		7/1998
WO	WO 98/33102		7/1998
WO	WO 98/47252		10/1998
WO	WO 99/06910		2/1999
WO	WO 99/18518		4/1999
WO	WO 99/23856		5/1999
WO	WO 99/28897		6/1999
WO	WO 99/35009		7/1999
WO	WO 99/43136		8/1999
WO	WO 99/12152		11/1999
WO	WO 00/07849		2/2000
WO	WO 00/38340		6/2000
WO	WO 00/54187		9/2000
WO	WO 00/60450		10/2000
WO	WO 00/79372	A1	12/2000

OTHER PUBLICATIONS

I. Adcock, "No Longer Square," Automotive & Transportation Interiors, Aug. 1996, pp. 38-40.
M. Krebs, "Cars That Tell You Where to Go," The New York Times, Dec. 15, 1996, section 11, p. 1.
L. Kraar, "Knowledge Engineering," Fortune, Oct. 28, 1996, pp. 163-164.
S. Heuchert, "Eyes Forward: An ergonomic solution to driver information overload," Society of Automobile Engineering, Sep. 1996, pp. 27-31.
"OnStar" brochure by General Motors Corp., 1997.
Sun Microsystems, Inc., "Why Jini Now?", Aug. 1, 1998, pp. 1-14.
Clohessy, Kim, Object Technology, Inc., Virtual Machine Technology: Managing Complexity and Providing Portability for Embedded Systems, 2001, pp. 58-60.
Affinity Labs of Texas, LLC, Plaintiff, v. *Apple, Inc.,* Defendant, C.A. No. 9:09-cv-00047-RC (Eastern District of Texas), Complaint (pp. 1-7), with Exhibits A, B and C, Filed Mar. 24, 2009, 76 pages in total.
Daniel Kumin, Stereo Review, "Jukebox Heaven," Jan. 1999, pp. 64-71.
Audio, "Anthem Five-Channel Amp," Jul./Aug. 1999, p. 15.
Sony webpages in Japanese, "Portable Mini Disc Player MD Recorder," Jul. 21, 1996, pp. 1-5.
Sony, "MD Walkman Operating Instructions—MZ-R4ST," 1996, pp. 1-64.
Sony, "MD Walkman Operating Instructions—MZ-R5ST," 1997, pp. 1-79.
Stereo Review, "New Products," Jun. 1998, 1 page.
Sony webpages in Japanese, "Portable Mini Disc Player MD Recorder," Oct. 21, 1999, pp. 1-63.
Jamie Sorcher, Stereo Review, "New for the Road," May 1998, 2 pages.
Sony, "MD Walkman Operating Instructions—MZ-R55," 1998, pp. 1-42.
John Whitters, The Advertiser, "Is the cassette doomed?" Jul. 16, 1998, pp. 1-2.
George Cole, Financial Times, "Listen with your eyes: A new music CD format supplies textual information," Oct. 23, 1997, pp. 1-2.
Dana J. Parker, Standard Deviations, "CD-TEXTra! Read all about it!", Oct. 1996, pp. 1-2.
Mobile Electronics, "Down the Road," Jul. 2004, pp. 1-2.
PR Newswire, "Alpine Announces Fall Release of Interface Adapter That Enables iPod Control and Playback From In-Vehicle Sound Systems," Jul. 7, 2004, 2 pages total.
Greg Borrowman, The Sydney Morning Herald, "Philips Releases Its Latest DVD," 1999, 2 pages total.
Sony webpages in Japanese, "Portable MD Recorder," Oct. 1997, 5 pages total.
Sony, "Walkman MZ-R50 Recorder," Oct. 1997 7 pages total.
Sony, "MD Walkman MZ-R55," Oct. 10, 1998, 6 pages total.
Von Herbert Pauler, Funkschau, "Kopierschutz fur MP3-Audio," 1999, 9 pages total.
Franklin N. Tessler, Macworld, "Mobile MAC, Highway Fidelity," Jun. 2004, pp. 1-3.
Barry Collins, The Sunday Times, "High-class high-tech—Buyer's guide," 2001, 2 pages total.

Peter Familari, Herald-Sun, "Clever Deck—CD and mini-disc combination," 1998, 1 page.
Rio Car, "Car Toy Sole Retailer For Rio Car," May 28, 2001, 1 page.
Amy Gilroy, Twice, "Panasonic Ships First SD MP3," Dec. 4, 2000, 1 page.
Twice, "PhatNoise Readies MP3," Nov. 5, 2001, 1 page.
Kevin Savetz, The Washington Post, "Putting Your MP3 Collection in Drive (Final Edition)," Aug. 10, 2001, pp. 1-3.
Twice, "Study Sees Retail Opportunities For Mobile Multimedia," vol. 14, Issue 15, Jun. 28, 1999, pp. 1-2.
Stephen Kempainen, EDN Access For Design, By Design "In-car computing gets personal," Aug. 17, 1998, pp. 1-7.
Japanese Website, MM MPMANIA.com, http:/mpmania, x-y.net/bbs/zboard.php?id=products&keyword=1998, 1 page.
Japanese document regarding MP3, May 1999, 1 page.
Mark Moeller, Computing Unplugged Magazine, "Software Review, New software products for the Auto PC," 1999-2009, Zatz Publishing, pp. 1-4.
Mark Moeller, Computing Unplugged Magazine, "Auto PC Power, A survey of resources for Auto PC owners," 1999-2009, Zatz Publishing, pp. 1-5.
Mark Moeller, Computing Unplugged Magazine, "Auto PC Power, A look at the first year of the Auto PC with Microsoft," 1999-2009, Zatz Publishing, pp. 1-5.
Mark Moeller, Computing Unplugged Magazine, "Auto PC Power, Next generation AutoPCs make a big debut at CES," 1999-2009, Zatz Publishing, pp. 1-6.
Mark Moeller, Computing Unplugged Magazine, "Programming Power, Getting started developing software for the Auto PC," 1999-2009, Zatz Publishing, pp. 1-5.
Mark Moeller, Computing Unplugged Magazine, "Behind the Scenes, The AutoPC: Vision vs. Reality," 1999-2009, Zatz Publishing, pp. 1-7.
Mark Moeller, Computing Unplugged Magazine, "Product Preview, A Survey of Auto PC 2.0 for software developers," 1999-2009, Zatz Publishing, pp. 1-7.
Mark Moeller, Computing Unplugged Magazine, "AutoPC Update, Auto PC/Windows CE for Automotive news bites," 1999-2009, Zatz Publishing, pp. 1-4.
Norbert A. Streitz, et al., "Dolphin: Integrated Meeting Support Across Local And Remote Desktop Environments And LiveBoards," Integrated Publication and Information Systems Institute, 1994, pp. 345-358.
Leo Degen, et al., "Working with Audio: Integrating Personal Tape Recorders and Desktop Computers," May 3-7, 1992, pp. 413-418.
H.S. Jun Gibee, "A Virtual Information Desk On The Internet," University of Ulsan, Sep. 1999, pp. 265-268.
Steve Whittaker, et al., "TeleNotes: Managing Lightweight Interactions in the Desktop," Lotus Development Corporation, Jun. 1997, pp. 137-168.
R.M. Crowder, et al., "Integration of Manufacturing Information Using Open Hypermedia," Computer in Industry, 1999, pp. 31-42.
Tomas Bostrom, et al., "Mobile Audio Distribution," Royal Institute of Technology, 1999, pp. 166-172.
Alex Poon, et al., Xerox Disclosure Journal, vol. 19, No. 2, "Gestural User Interface Technique for Controlling the Playback of Sequential Media," Mar./Apr. 1994, pp. 187-190.
Deb Kumar Roy, "NewsComm: A Hand-Held Device For Interactive Access to Structured Audio," Massachusetts Institute of Technology, Jun. 1995, pp. 1-12.
Victoria Bellotti, et al., "Walking Away from the Desktop Computer: Distributed Collaboration and Mobility in a Product Design Team," 1996, pp. 209-218.
Upul Obeysekare, et al., "The Visual Interactive Desktop Laboratory," Jan.-Mar. 1997, pp. 63-71.
Sui-Meng Poon, et al., "Integration of Value-Added Audio Playback Capacity Into Computer Network," Nanyang Technological University, 1995, pp. 632-636.
Erdal Paksoy, et al., "A variable-rate celp coder for fast remote voicemail retrieval using a notebook computer," DSPS R&D Center, Texas Instruments, 1997, pp. 119-124.
Jeffrey A. Davis, "Use of Personal Computers in Satellite Command and Control Systems," Raytheon Systems Company, Oct. 24, 1999, pp. 283-291.
A Chan, et al., "The PEP-II Project-Wide Database," Stanford University, 1996, pp. 840-842.
Krishna Bharat, et al., "Migratory Applications," Springer Berlin, vol. 1222, 1997, pp. 1-21.
Microsoft, "Getting Started Microsoft. Windows. 98" Second Edition, 1998, pp. 1-138.
Saul Greenberg, "PDAs and Shared Public Displays: Making Personal Information Public, and Public Information Personal," University of Calgary, Mar. 1999, pp. 1-11.
Microsoft, "Introducing Microsift Windows 95—Certificate of Authenticity," 1995, pp. 1-117.
Richard C. Davis, et al., "A Framework for Sharing Handwritten Notes," 1998, pp. 119-120.
Krishna A. Bharat, et al., "Migratory Applications," UIST '95, Nov. 14-17, 1995, pp. 133-142.
Brad A. Myers, "Collaboration Using Multiple PDAs Connected To A PC," Carnegie Mellon University, 1998, pp. 385-294.
Richard C. Davis, et al., "NotePals: Lightweight Note Sharing by the Group, for the Group," May 15-20, 1999, pp. 338-345.
Jun Rekimoto, et al., "Augmented Surfaces: A Spatially Continuous Work Space for Hybrid Computing Environments," May 15-20, 1999, pp. 378-385.
Dan R. Olsen, Jr., "Interacting with Chaos," Sep. and Oct. 1999, pp. 42-54.
Scott Robertson, et al., "Dual Device User Interface Design: PDAs and Interactive Television," Apr. 13-18, 1996, pp. 79-86.
Symantec Corporation, "pcAnywhere32 User's Guide," 1993-1997, pp. 1-216.
Krishna Bharat, et al., Migratory Applications, "Mobile Object Systems Towards the Programmable Internet," Springer Berlin/Heidelberg, vol. 1222/11997, 1997, pp. 1-134.
Diamond Multimedia Systems, Inc., "Rio PMP300, User's Guide," 1998, pp. 1-27.
Sony, "Portable MiniDisc Recorder, Operating Instructions, MZ-R55," 1998, pp. 1-42.
Norbert A. Streitz, et al., "i-Land: An Interactive Landscape for Creativity and Innovation," Proceedings of the ACM Conference on Human Factors in Computing Systems, May 15-20, 1999, pp. 120-127.
IBM, "WordPad z50 Cradle Option—User's Guide," 1990, pp. 1-18.
IBM Mobile Systems, "WorkPad z50 Mobile Companion (2608-1Ax), Hardware Maintenance Manual," Mar. 1999, pp. 1-77.
Kevin Jost, Automotive Engineering International, "The car as a mobile-media platform," May 1998, pp. 49-53.
Microsoft Corporation, "Windows CE 2.1 Technical Articles, Developing Applications for an Auto PC," Jun. 1999, pp. 1-13.
Infogation Corporation, "InfoGation Corp. Introduces Software Applications for Next-Generation Smart Car Systems," Jan. 8, 1998, pp. 1-2.
Business Wire, "ORA Electronics Announces USB-Compatible TelCar Mark VII Begins Shipping First Quarter of 1999," Jan. 6, 1999, pp. 1-2.
ORA USA, "ORA Electronics Patents Telcar Cellular Telephone Interface," Jul. 6, 1998, pp. 1-2.
Hewlett Packard, "HP Jornada 430/430se Palm-Size PC, User's Guide," Edition 1, 1999, pp. 1-151.
NEC, "NEC MobilePro 750C, User's Guide," 1998, pp. 1-83.
MPMan, "User's Guide, The Portable MP 3player using the flash memory and SmartMedia card," 1997, pp. 1-35.
MPMan, "User's Guide, The portable MP3 player using the flash memory with variety features including the voice recording, phone/memo browsing, etc.," 1997, pp. 1-47.
Anand Lal Shimpi, Empeg, Ltd., "MP3 meets Car Audio: Empeg Mark II in-dash Car MP3 Player," Sep. 18, 2000, pp. 1-17.
Peter Clarke, EE Times, "Engineers drive craze for MP3 audio players," Feb. 5, 1999, pp. 1-4.
Diamond Multimedia Systems, Inc., "Rio PMP300 User's Guide," 1998, pp. 1-27.

Stephen J. Buckley, et al., "The Car as a Peripheral, Adapting a Portable Computer to a Vehicle Intranet," SAE Technical Paper Series, 98C030, Oct. 19-21, 1998, pp. 1-14.

"The MP3 Mobile," Apr. 8, 1998, pp. 1-13.

12-Volt Business & Technology Solutions, AutoMedia, "How the Intelligent Data Bus will impact the way you do business," Nov. 1998, pp. 1-2.

Press Release, "Creative Labs Launches Nomad Portable MP3 Players," Apr. 15, 1999, pp. 1-5.

BMW, "Betriebsanleitung Bordmonitor mit Navigation und TV," 1995, pp. 1-82.

BMW, "Owner's Manual, On-board monitor with navigation system," 1996, pp. 1-81.

Transperfect/Translations, "True and accurate translation of the 1995 BMW Manual, from German into English," Aug. 16, 2005, pp. 1-80.

Heinz Sodeikat, "Euro-Scout is facing the German 1994 Market," 1994, pp. 551-556.

BMW, "The BMW On-Board Navigation System—Technology Takes a Remarkable Turn," 2005, pp. 1-9.

Oldsmobile, "1991 Toronado/Trofeo User's Guide," 1991, pp. 1-41.

Yepp, "Digital Sounds—yepp—YP-E32/E64102-291," Oct. 23, 1999, pp. 1-46.

U.S. Appl. No. 60/167,179, entitled "System, Method, And Device for Playing Recorded Music on a Wireless Communications Device," by Devon A. Rolf, filed Nov. 23, 1999, pp. 1-48.

Microsoft, "Getting Started, Microsoft Windows 98, For distribution with a new PC only," 1998, pp. 1-145.

PR Newswire, "Alpine Announces Fall Release of Interface Adapter That Enables iPod Control and Playback from In-Vehicle Sound Systems," Jul. 7, 2004, pp. 1-2.

Ha-Young Park, The Customer Times, "Portable Computer Music, MP3 File and MP3 Player rise as the Next Generation Audio Format," May 1999, pp. 1-2.

"MP3 Players Introduced in the Korean IT Magazines," 1998-1999, pp. 1-15.

PR Newswire Association, Inc., "Delphi's Communiport(R) Technology for Tomorrow, Today Demonstrated at Frankfurt Auto Show," Sep. 15, 1999, pp. 1-8.

Crain Communiations, Inc., "Products," Agilent Technologies Press Release, Feb. 21, 2000, pp. 1-6.

The Washington Times, LLC, John Hanan, Dallas Morning News, "Cars add computer, audiovisual gear," Jan. 14, 2000, pp. 1-3.

Request For Ex Parte Reexamination Under 35 U.S.C. §302 for U.S. Patent No. 7,324,833, Filed on Nov. 7, 2008 (pp. 1-21).

Richard Menta, "1200 Song MP3 Portable Is A Milestone Player," Jan. 11, 2000, pp. 1-3.

R. Lind, et al. "The Network Vehicle—A Glimpse into the Future of Mobile Multi-Media," Sep. 1999, pp. 27-32.

Yamaha Corporation, "QY Data Filer—Owner's Manual," pp. 1-250, 1997.

Yamaha Corporation, "Yamaha Music Sequencer, QY70, Owner's Manual," Chapters 1-11, 1997.

"Universal Serial Bus Specification," Revision 1.1, Sep. 23, 1998, pp. ii-106.

* cited by examiner

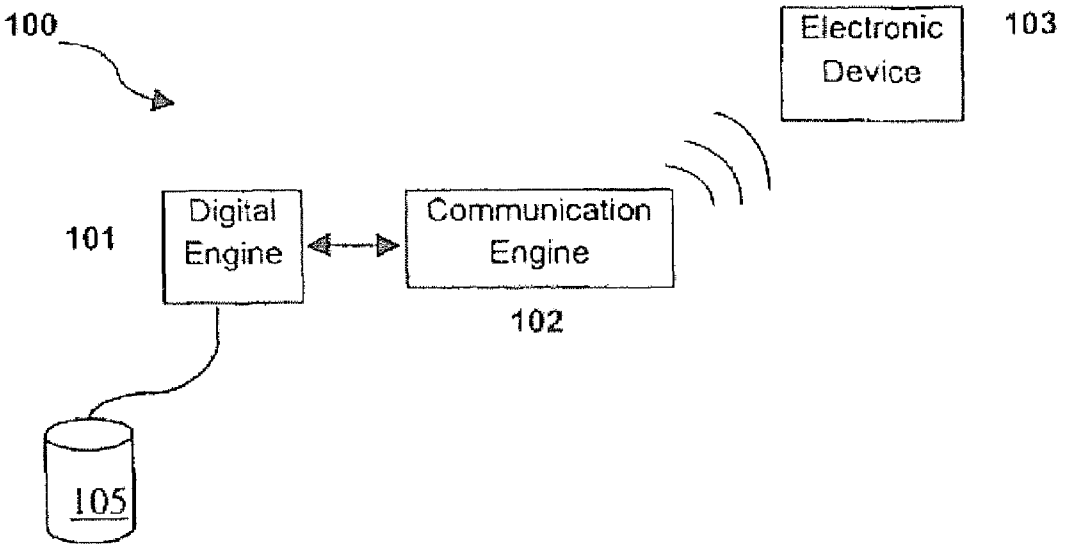
100
Electronic Device
103
101
Digital Engine
Communication Engine
102
105

FIG. 1

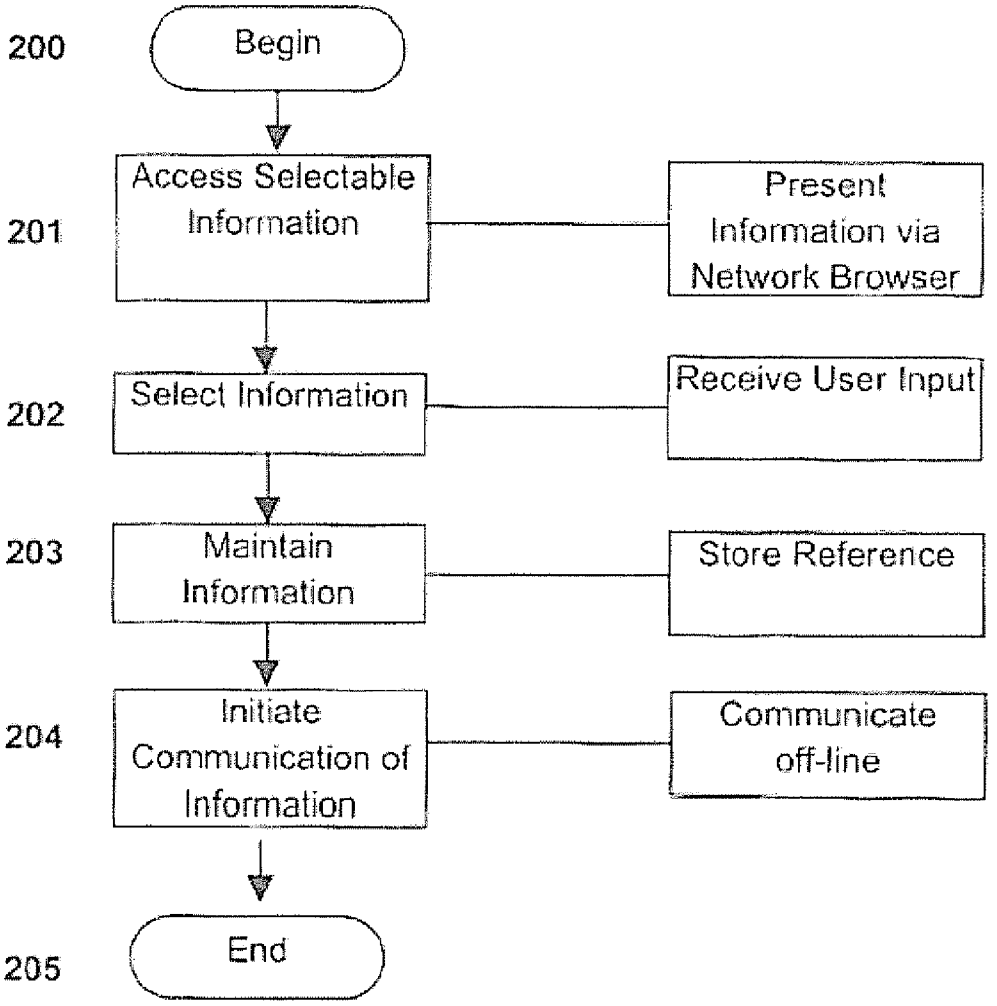
200
Begin
201
Access Selectable Information
Present Information via Network Browser
202
Select Information
Receive User Input
203
Maintain Information
Store Reference
204
Initiate Communication of Information
Communicate off-line
205
End

FIG. 2

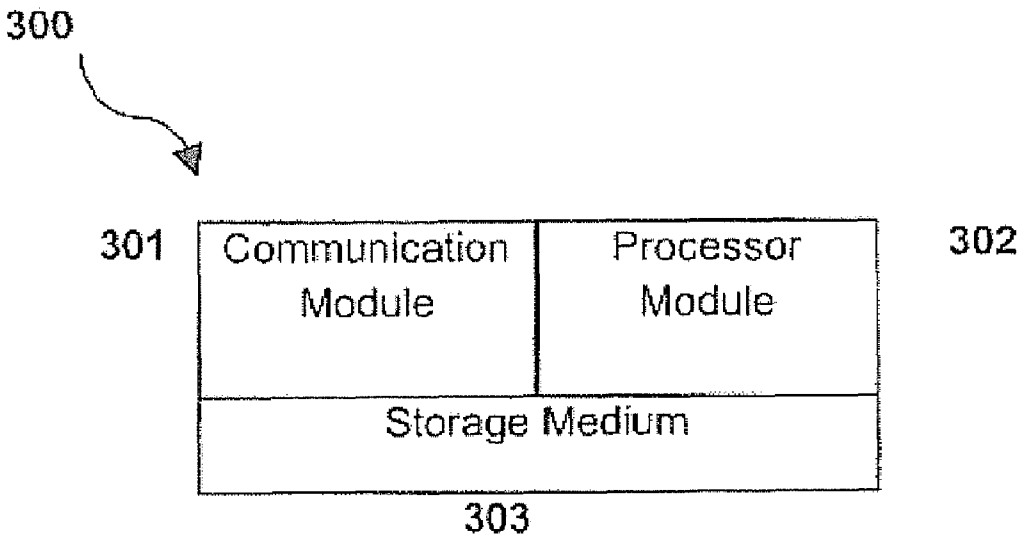
300
301
Communication Module
Processor Module
302
Storage Medium
303

FIG. 3

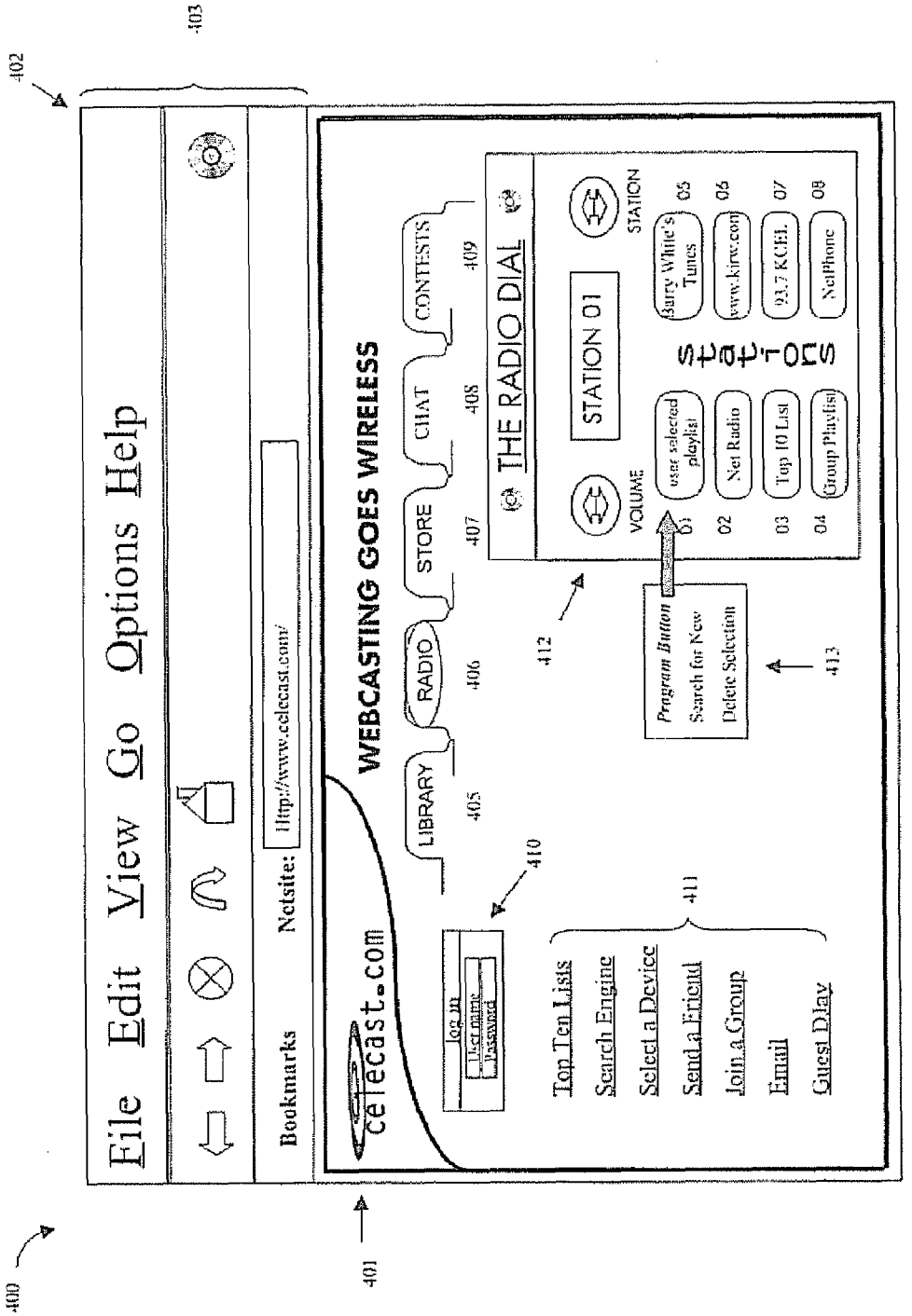
400
401
402
403
File Edit View Go Options Help
Bookmarks
Netsite:
http://www.celecast.com/
celecast.com
WEBCASTING GOES WIRELESS
LIBRARY
RADIO
STORE
CHAT
CONTESTS
405
406
407
408
409
THE RADIO DIAL
STATION 01
STATIONS
VOLUME
STATION
user selected playlist
Net Radio
Top 10 List
Group Playlist
Barry White's Tunes
www.kirw.com
93.7 KCHL
NetPhone
01
02
03
04
05
06
07
08
Program Button
Search for New
Delete Selection
412
413
410
411
log in
User name
Password
Top Ten Lists
Search Engine
Select a Device
Send a Friend
Join a Group
Email
Guest Diary

FIG. 4

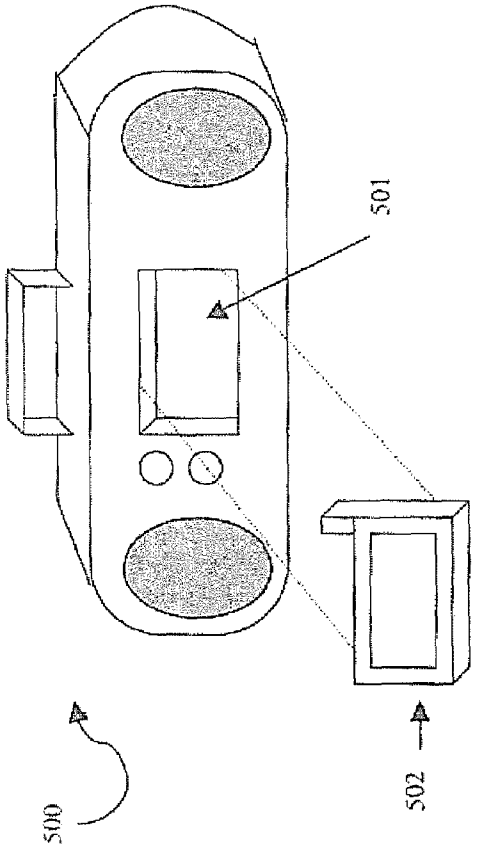

FIG. 5A

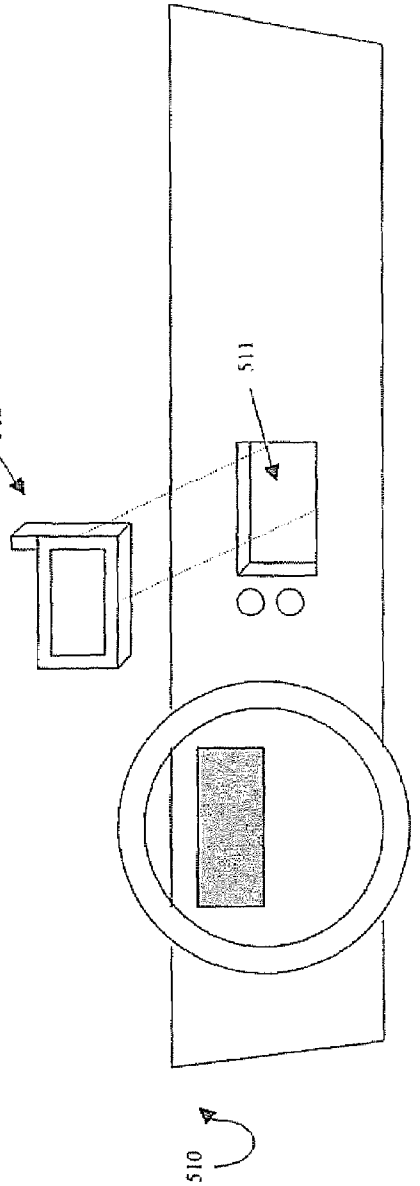

FIG.5B

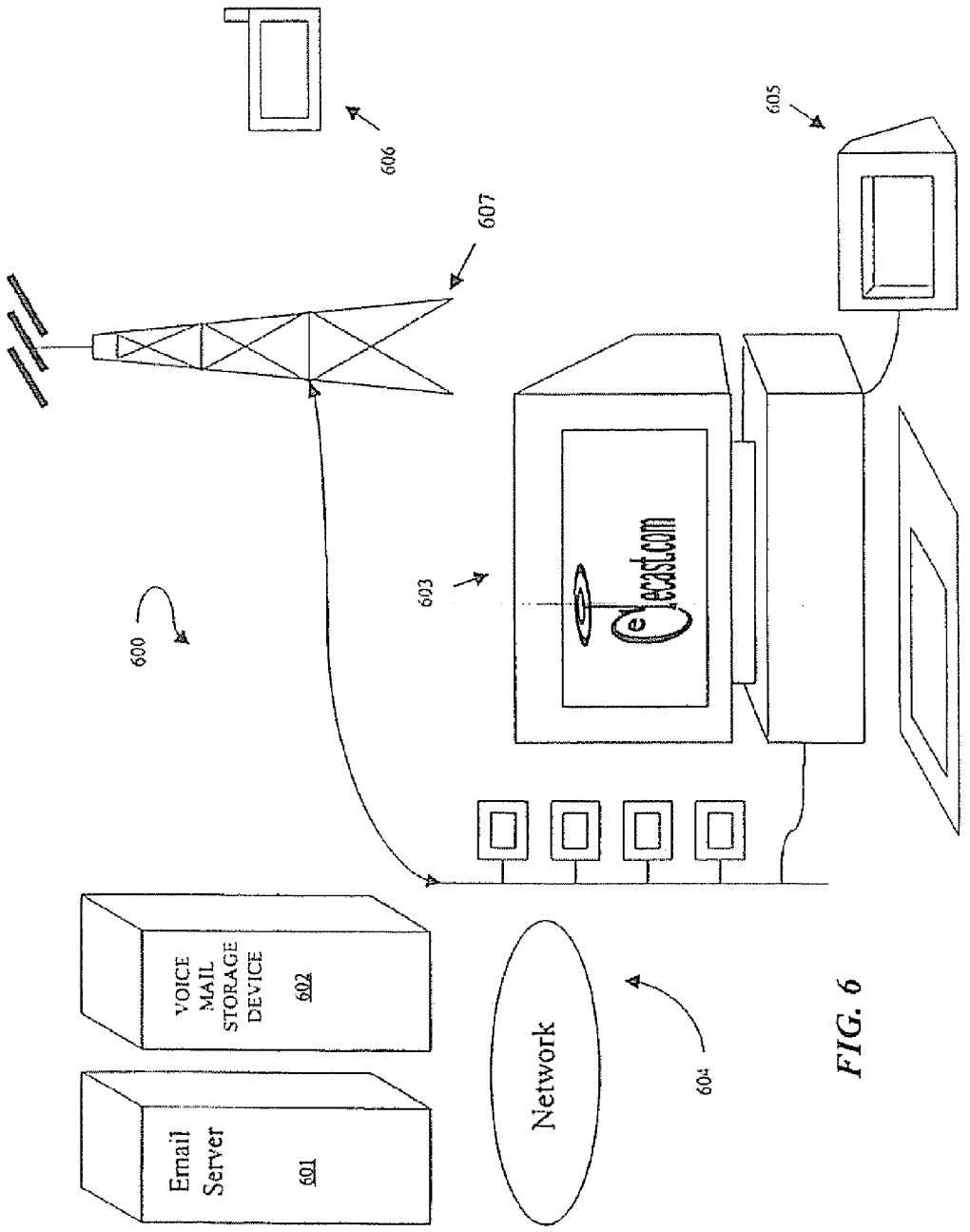
600
601
Email Server
602
VOICE MAIL STORAGE DEVICE
603
604
Network
605
606
607

FIG. 6

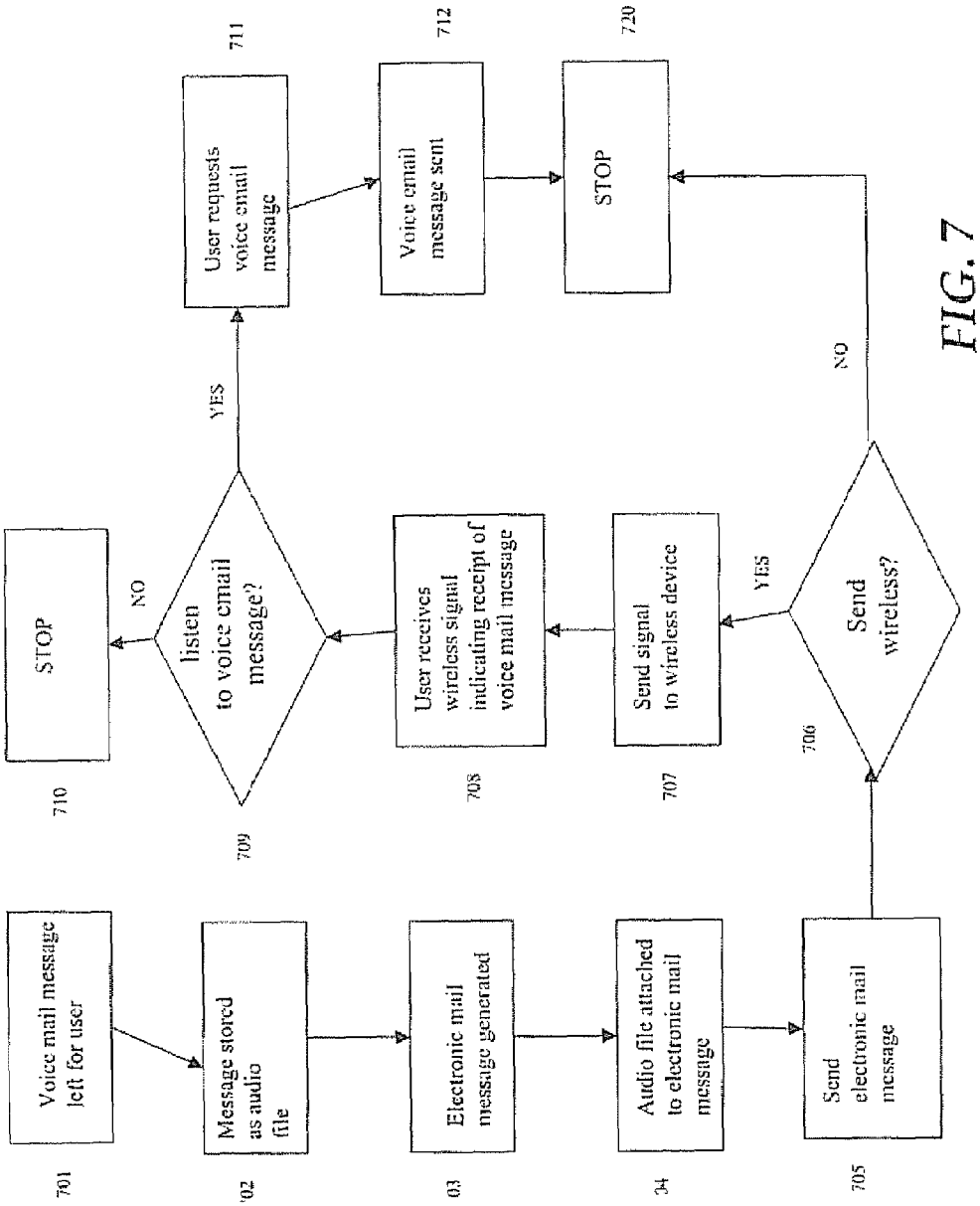
Voice mail message left for user
701
Message stored as audio file
702
Electronic mail message generated
703
Audio file attached to electronic mail message
704
Send electronic mail message
705
Send wireless?
706
Send signal to wireless device
707
User receives wireless signal indicating receipt of voice mail message
708
listen to voice email message?
709
YES
NO
User requests voice email message
711
Voice email message sent
712
STOP
720
STOP
710

FIG. 7

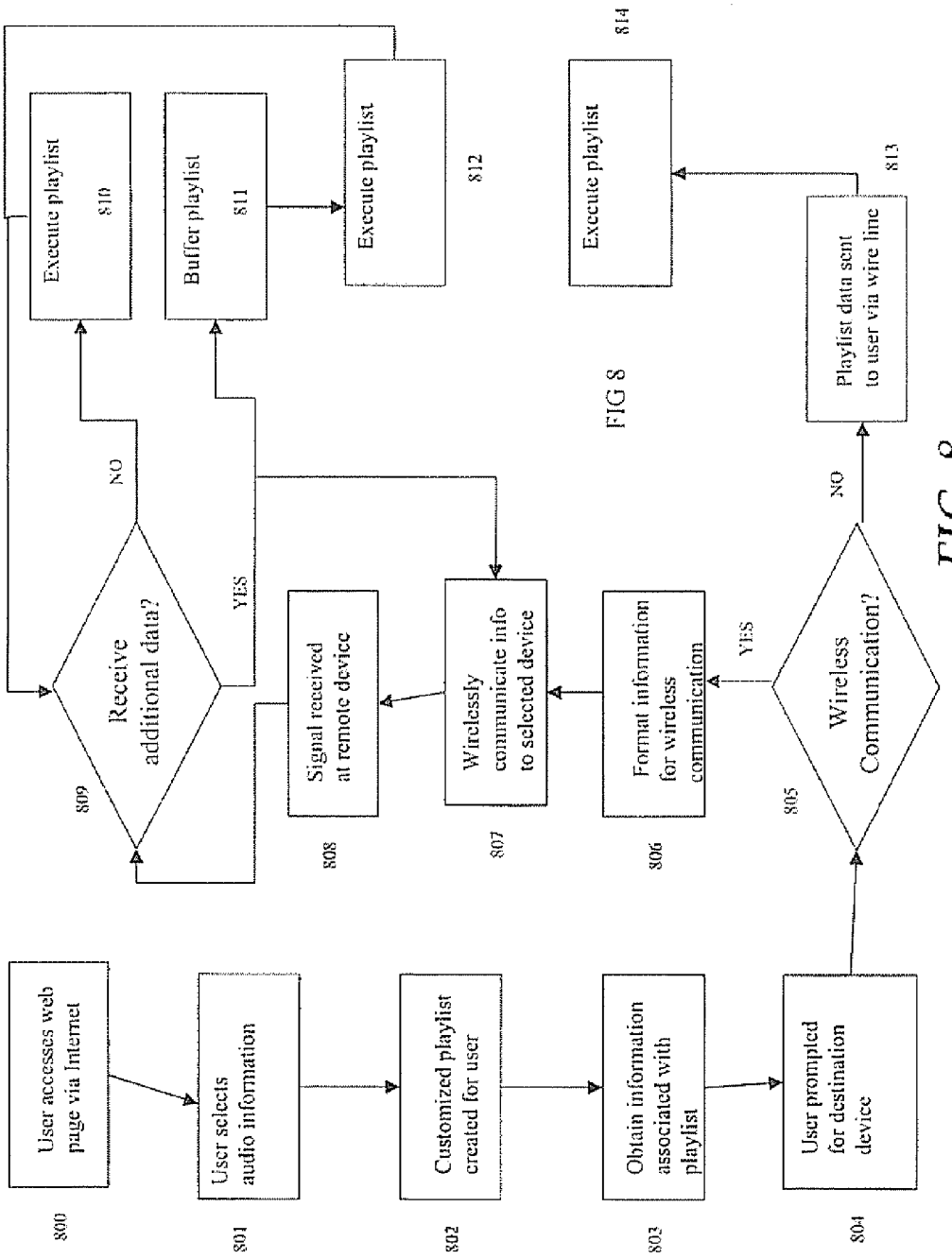
User accesses web page via Internet
800
User selects audio information
801
Customized playlist created for user
802
Obtain information associated with playlist
803
User prompted for destination device
804
Wireless Communication?
805
YES
NO
Format information for wireless communication
806
Wirelessly communicate info to selected device
807
Signal received at remote device
808
Receive additional data?
809
YES
NO
Execute playlist
810
Buffer playlist
811
Execute playlist
812
Playlist data sent to user via wire line
813
Execute playlist
814

FIG 8

FIG. 8

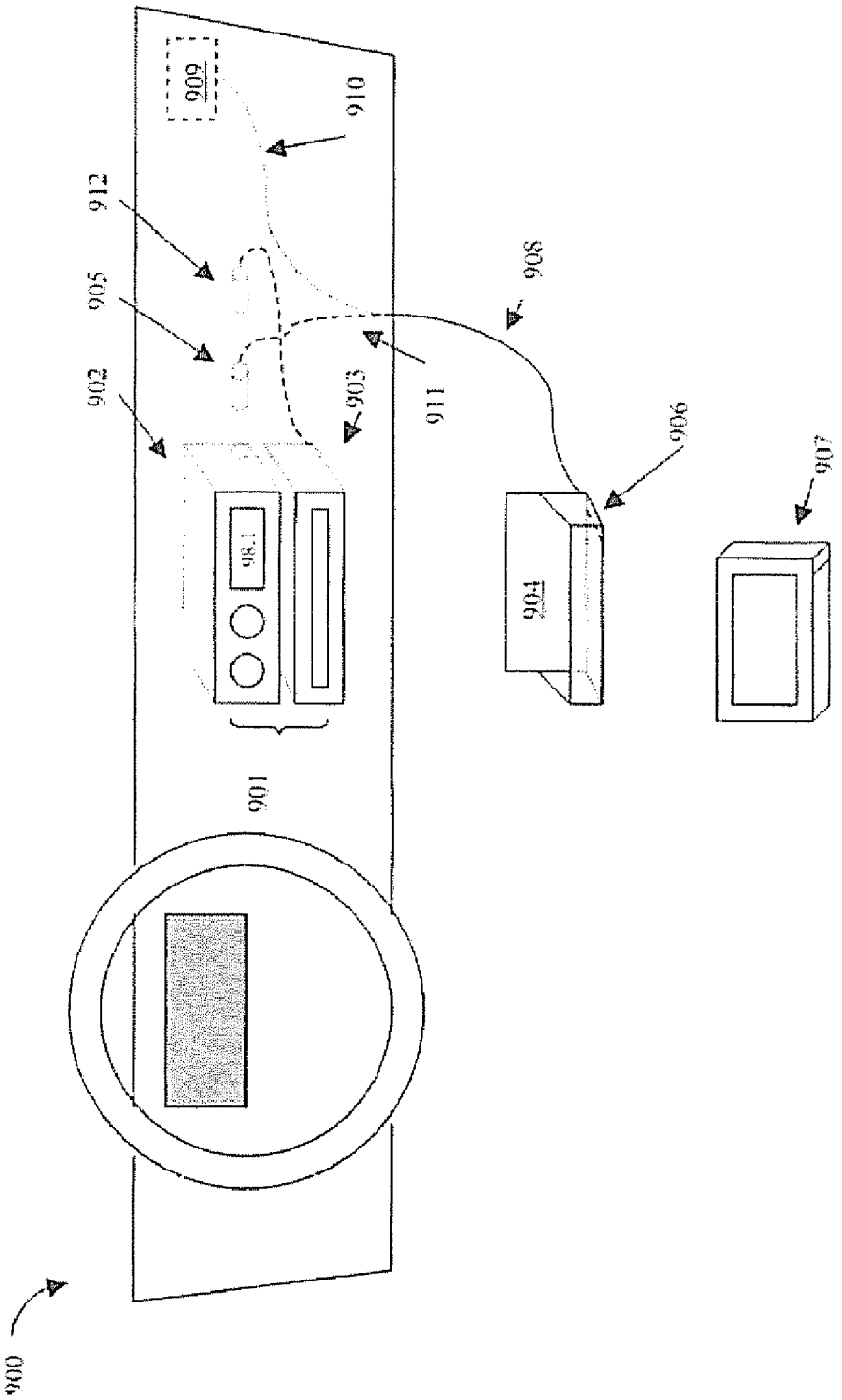

FIG. 9

CONTENT DELIVERY SYSTEM AND METHOD

RELATED APPLICATIONS

This is a continuation application of U.S. patent application Ser. No. 09/537,812 filed on Mar. 28, 2000, now U.S. Pat. No. 7,187,947 the entirety of which is incorporated herein by reference.

FIELD OF THE DISCLOSURE

The present disclosure relates to digitally stored content and, more specifically, to a content delivery system and method.

BACKGROUND

The first commercial radio stations in the United States began operation around 1920. Today, there may be as many as 12,000 radio stations in the United States programming in several distinct formats. When broadcasting their respective signals, these radio stations often use an analog signal, which may be modulated based on frequency or amplitude. Frequency modulated (FM) radio appears to be the dominant entertainment medium while amplitude modulated (AM) radio seems to be a popular outlet for news and information.

Unfortunately, analog radio may be unable to provide the sound quality and consistency that radio listeners desire. As such, several broadcasting related companies have begun to consider a movement to digital radio. Unlike analog radio reception, digital radio reception may be able to provide compact disk (CD) quality sound while remaining virtually immune to interference. Being immune to interference may result in reducing static growls or "multipath" echoes, echoes caused by signal reflections off buildings or topographical features.

Some countries, like Canada and many European countries, may choose to have digital radio operate in a single digital radio band such as the L-band between 1452-1492 megahertz (MHz). This band would allow the reception of both terrestrially and satellite-originated signals. By comparison, FM radio typically operates between 88 and 108 MHz while AM radio typically operates between 0.525 and 1.705 MHz. Neither of these bands allows for easy transmission via satellite.

Canada proposed using the L-Band for digital radio as early as 1992. Several countries throughout the world have since agreed to use the L-Band for digital radio with one notable exception. It appears the United States has chosen not to operate its digital radio within the L-Band. In the United States, the L-Band may already be committed for military uses. Apparently, the United States plans to adopt a system called in-band on-channel, or IBOC, which fits within the AM and FM frequencies.

IBOC technology may offer some advantages over L-Band transmissions. For example, there may be no need for new spectrum allocations. There may be backward and forward compatibility with existing AM and FM systems on both the transmitter and receiver sides, and there may be a low-investment upgrade to digital systems. Unfortunately, a workable IBOC solution is yet to be seen though technology may someday make IBOC digital radio commercially possible.

Even if an IBOC solution becomes commercially available in the United States, IBOC digital radio may suffer from several shortcomings. For example, there may global standardization problems, Though the United States favors

IBOC, the European and Canadian communities seem to favor L-Band making the establishment of a global standard difficult.

BRIEF DESCRIPTION OF THE DRAWINGS

A more complete understanding of the present embodiments and advantages thereof may be acquired by referring to the following description taken in conjunction with the accompanying drawings, in which like reference numbers indicate like features, and wherein:

FIG. **1** depicts a general system for wirelessly communicating selective information to an electronic device in accordance with one aspect of the present invention;

FIG. **2** illustrates a block diagram of a method of wirelessly communicating selected information to an electronic device;

FIG. **3** illustrates an electronic device operable to receive selected audio information in accordance with the teachings of the present invention;

FIG. **4** illustrates a graphical user interface (GUI) for displaying selectable audio information according to one aspect of the present invention;

FIG. **5**A illustrates a portable radio system having a mount for an electronic device according to one embodiment of the present invention;

FIG. **5**B illustrates an automobile console having a mount for coupling an electronic device according to one aspect of the present invention;

FIG. **6** illustrates a block diagram of a system for communicating voice mail messages using email according to one embodiment of the present invention;

FIG. **7** illustrates a flow chart for providing voice email messages according to one embodiment of the present invention;

FIG. **8** illustrates a flow diagram of a method for providing selected audio information to an electronic device according to one embodiment of the present invention; and

FIG. **9** illustrates an automobile console having a mount for an electronic device according to one embodiment of the present invention.

DETAILED DESCRIPTION OF THE DRAWINGS

The conceptual groundwork for the present invention includes wirelessly communicating selective information to an electronic device. According to one aspect, a user may interact with the Internet to select information, such as audio information, and wirelessly communicate the selected information to an electronic device. The electronic device receives the information via a wireless communications network and processes the information accordingly. In a particularized form, a user may select information from an Internet website operable to allow selectivity of audio information such as songs, on-line radio stations, on-line broadcasts, streaming audio, or other selectable information. Upon selecting the audio information, information or data associated with the selected audio information is wirelessly communicated to an electronic device. The electronic device may then be used to process the selected audio information. In this manner, a user may receive selective audio information via a wireless electronic device.

In one form, the electronic device may be operable to communicate with an individual's automobile audio system. A user may select audio information utilizing a personal computer with access to a website operable to display selectable audio information. The selected audio information may then be wirelessly communicated to the electronic device

associated with an automobile's audio system. Therefore, upon receiving the selected audio information, a user may access and play the received audio information utilizing the electronic device in association with the automobile's audio system.

The present invention is not limited to communicating only audio information. One skilled in the art can appreciate that other types of information, such as video, textual, etc, may be communicated utilizing the systems and methods disclosed herein without departing from the spirit and scope of the present invention. Additionally, it will be understood that information may be formatted in a plurality of ways at different phases of communication without loosing the underlying content of the selected information, For example, an audio file may be formatted, segmented, compressed, modified, etc. for the purpose of providing or communicating the audio invention. Therefore, the term "audio information" or "information" is used in a general sense to relate to audio information in all phases of communication.

FIG. **1** depicts a general system for wirelessly communicating selective information to an electronic device in accordance with one aspect of the present invention, The system, illustrated generally at **100**, includes a digital engine **101** coupled to a communications engine **102**. Communications engine **102** is remotely coupled to an electronic device **103**. Digital engine **101** may be directly or indirectly coupled to storage device **105** operable to store information. Digital engine **101** maintains information or data associated with selected information in a digital format. The information may be stored within storage device **105** or other storage devices operable to maintain data or information associated with the selected information.

Communications engine **102** is communicatively coupled to digital engine **101** and operable to wirelessly communicate the selected information to electronic device **103**. During operation, audio information may be selected by a user utilizing a personal computer or other devices operable to communicate with an information network. Digital engine **101** is operable to maintain information associated with the selected audio information. For example, the information could be several songs or titles configured as an audio file and formatted in a digital format such as an MP3 file, wave file, etc. The maintained information may also be a reference to a network location where an audio file may be stored, a network location where a network broadcast of audio information may be located, etc. or other network locations having information associated with the selected audio information. Therefore, digital engine **101** may maintain a plurality of different types of information or data associated with the selected audio information.

System **100**, utilizing communication engine **102**, may wirelessly communicate data or information associated with the selected audio information to electronic device **103** thereby providing wireless communication of selected information to an electronic device operable to receive wireless communications. In one embodiment, digital engine **101** may be used in association with an Internet website configured to provide access to selectable information. The Internet website operably associated with digital engine **101** allows a user to select information to be wirelessly communicated to electronic device **101** utilizing a network environment. The Internet website may include several different types of information related to audio information.

FIG. **4**, described in greater detail below, illustrates one embodiment of providing an Internet website for displaying selectable audio information. For example, the Internet website may include music and/or artist search engines, playlists, top 10 charts, artists by genre, and other information associated with audio information. A user may select information associated with the audio information and digital engine **101** can maintain the information or data associated with the selected information in a digital format. Communications engine **102** coupled to digital engine **101** may wirelessly communicate data associated with the selected audio information to electronic device **103**. Therefore, a user may access and select audio information via an Internet website and wirelessly communicate the data to an electronic device. As such, system **100** advantageously allows for wireless communication of selected audio information to electronic devices that may be remotely located from a conventional terrestrial communication network.

Electronic device **105** may be configured in a plurality of ways for receiving wireless communication of selected audio information. In one embodiment, electronic device **105** may be operable as a component configured to receive a cellular signal comprising the selected information communicated by the communication engine. For example, a device having a cellular modem may be operable to receive the information at specified intervals. Upon receiving the information the electronic device may process the received information. Electronic devices are described in more detail below and may include a network radio, a modular device, an audio system, a personal digital assistant (PDA), a cellular phone, or other electronic devices operable to receive information wirelessly communicated by communication engine **102**.

Communications engine **102** may be operable to wirelessly communicate selected information to electronic device **103** in a plurality of ways. The present invention advantageously allows for several different embodiments of wirelessly communicating selected audio information to electronic device **103** and is not limited to any specific configuration described below. Several different types or combinations of wireless communication may be realized by the present invention. Communications engine **102** may be operable to wirelessly communicate the selected information from an information network, such as the Internet, to an electronic device operable to receive wireless communications. In one embodiment, communications engine **102** may comprise a conduit to interface information with a wireless communication network. The conduit may configure the information located within the information network into a format operable to be transmitted via wireless communication.

For example, a wireless device may be operable to receive packets of information having a specific size and in a specific format. In such an embodiment, communications engine **102** could format the information into a desirable format for wirelessly communicating the information to electronic device **103**. Several types of wireless communication may be used by communications engine **102** to communicate the selected information to an electronic device. Communications networks such as GSM, Digital Satellite communication, SB, Radio bands, DRC, SuperDRC or other systems or types of transmission such as TDMA, CDMA, spread spectrum, etc. or frequencies such as between about 1.7 GHz and 2.0 GHz may be realized by the present invention for communicating information or data representing the selected audio information to electronic device **103**.

In one embodiment, the selective information may be communicated using a digital broadcast signal. Digital broadcast includes providing information via a signal such as AM, FM, and the like. Digital information may be included or encoded as a sub-carrier within the broadcast signal and received by electronic device **103**. A digital sub-carrier may include a selective bandwidth of frequencies for a specific radio station

(i.e., 6 MHz for FM), The selective information may be wirelessly communicated to electronic device **103** utilizing a communication engine **102** operable to communicate the selective information via a digital FM signal. In this manner, selective information may be communicated within digital FM sub-carriers to an electronic device operable to receive the information. For example, a user may subscribe to communicate the information via an FM sub-carrier and receive the selective data through wireless communication via a specified FM sub-carrier.

In one embodiment, the selected information may be formatted and transmitted to achieve a desirable transmission rate. For example, conventional systems may transmit information at a speed of 10 kilobits per second. Therefore, for 1 megabyte of information to be communicated to an electronic device, a transmission time of approximately 800 seconds may be required. The present invention may allow for a relative increase in transmission speed by removing the requirement that information be communicated asynchronously to an electronic device. For example, conventional wireless communication utilizes a specified frequency to communicate information in two directions (i.e., cellular phones). As such, information is communicated across a channel in an asynchronous manner to provide a continuous audio signal to the recipient.

The present invention advantageously allows for signals to be transmitted to an electronic device in a less than asynchronous manner. For example, if a user selected a song to be wirelessly communicated to an electronic device, system **100** could communicate the information in a less than asynchronous manner allowing the selected information to be transmitted efficiently thereby decreasing the overall download time for the selected audio information. In one embodiment, the selected information may be compressed and transmitted across the same frequency but at different phases thereby allowing plural signals having different phases to be wirelessly communicated to an electronic device. Therefore, the electronic device may be operable to receive multiple phased signals and process the selective information accordingly.

In one embodiment, the information may be wirelessly communicated at a relatively slow transmission rate. For example, a user may schedule when the selected audio information may be used by electronic device **103**. The user may select several different audio tracks or songs to be transmitted to an electronic device associated with the user's vehicle such that the user can listen to the user selected audio information during the drive home at the end of a workday. Therefore, it may be desirable to utilize a slower transfer speed due to the extended amount of time available prior to actual use of the selected audio information. In this manner, communications networks having less or slower transfer rates may be used to wirelessly communicate the selected audio information to the electronic device.

In another embodiment, high-speed wireless communication networks may be used to communicate the selected audio information. For example, a user may want to listen to an Internet broadcast of an Internet radio station. Therefore, high-speed communication may be required to wirelessly communicate or stream the selected audio information to an electronic device. In another embodiment, a hybrid of wireless communication rates may be deployed depending on the requirements of the selected audio information and/or the electronic device. For example, the selected audio information may first be transmitted to the electronic device via high-speed communication until enough information has been wirelessly communicated and buffered into a memory device operably associated with the electronic device. Upon communication of a certain percentage of the selected audio information, slower communication speeds may then be used to communicate additional selected audio information.

Therefore, system **100** may be configured in a plurality of ways to communicate selected information to electronic device **103**. Digital engine **101** may be used to maintain data or information associated with the selected information and communication engine **102**, communicatively coupled to digital engine **101**, may wirelessly communicate selected information to electronic device **103**.

FIG. **2** illustrates a block diagram of a method of wirelessly communicating selected information to an electronic device. The method may be used in association with the system illustrated in FIG. **1** or other systems operable to utilize the method of FIG. **2**.

The method begins generally at step **200**. At step **201**, selectable audio information may be accessed utilizing a network communications device. For example, selectable audio information may be displayed at an Internet website accessible by a personal computer. In another embodiment, the selectable information may be accessed utilizing a wireless communications device such as, a cellular phone, a PDA device, or other devices operable to provide access to the selectable audio information.

Upon accessing the selectable information, the method proceeds to step **202** where a user can identify or select audio information to be wirelessly communicated to an electronic device. For example, a user may select an entire album to be wirelessly communicated to a PDA device.

Upon the user selecting the audio information, the method proceeds to step **203** where the method maintains information associated with the selected information. In one embodiment, the information may be an audio file, such as a wave file, and MP3 file, etc. representative of the selected audio information. In another embodiment, a network location that comprises a file representing the selected information may be maintained. Another example may include a network location of a network broadcast of audio information. Therefore, the method at step **203** may maintain several different types of information associated with the selected audio information.

Upon maintaining information or data associated with the selected information, the method proceeds to step **204** where the method wirelessly communicates information associated with the selected information to an electronic device. For example, if an audio file associated with the selected audio information was maintained, the method would communicate the audio file to the electronic device. In another embodiment, a link or network address broadcasting the selected audio information may be accessed and, at step **204**, wirelessly communicated to an electronic device. In another embodiment, a combination of different types of audio information may be wirelessly communicated to an electronic device. Upon transmitting the selected audio information, the method proceeds to step **205** where the method ends.

Selected audio information may be communicated in a plurality of ways as described above including communicating via a cellular communications network to an electronic device operable to receive cellularly-communicated signals. For example, the information may be selected from a website operable to display selectable information. Upon selecting the audio information, a data file representing the selected audio information may be wirelessly communicated to an electronic device thereby allowing a user to select audio information via the Internet and wirelessly communicate the information to an electronic device.

In some embodiments, the wireless communication to an electronic device may occur in an off-line environment. For

example, a user may go "on-line" to access a website and select information and then go "off-line" or end the browsing session. The wireless communication may then occur while the user is off-line thereby removing the confines of using an active or on-line browsing environment (i.e. Internet radio broadcast, streaming audio, etc.) for accessing selected information. Therefore, the method of FIG. **2** allows for information, such as audio information, to be communicated from a network location such as a web site, to an electronic device "via" wireless communication. The present invention advantageously allows users to access and download information accessible by a network location to an electronic device operable to receive wireless communications thereby reducing the need for land lines, terrestrial communication networks, etc, for communicating selective information.

In one embodiment, the method of FIG. **2** may be deployed in association with an Internet website operable to display selectable links for downloading information, The information may include audio information such as MP3s, streaming audio, streaming,. Internet broadcasts, etc. are selectable by a user and operable to be wirelessly communicated to an electronic device. By providing a user with a website of selectable audio information operable to be wireless communicated to an electronic device, a user may customize information communicated to an electronic device. In one embodiment, a user may communicate information to an electronic device that may not be owned by the user. For example the method of FIG. **2** could be modified to allow a user to wirelessly communicate audio information to a plurality of electronic devices that may or may not be owned by the user.

FIG. **3** illustrates an electronic device operable to receive selected audio information in accordance with the teachings of the present invention, Electronic device **300** includes a communication module **301** such as a transceiver coupled to storage medium **303** such as a high speed buffer, programmable memory, or other devices operable to store information. Electronic device **300** may also include processor **302** operably associated with communication module **301** and storage medium **303**. Processor **302** may be operable to process wirelessly communicated selected information and in one embodiment may be integrated as part of communication module **301** of storage medium **303**. In the same maimer, as larger scale integration of electronic devices proliferate, communication module **301**, processor **302**, and storage medium **303** may be integrated into one communication component or device operable as electronic device **300**.

Processor **302** may be operable using software that may be stored within storage medium **303**. In one embodiment, software upgrades may be communicated to electronic device **300** via wireless communication allowing for efficient system upgrades for electronic device **300**. Storage medium **303** may include one or several different types of storage devices. For example, storage medium **303** may include programmable gate arrays, ROM devices, RAM devices, EEPROMs, minidisks or other memory devices operable to store information.

During use, electronic device **300** receives wireless communications of selective information. The information may be transmitted via a wireless communications network and received by electronic device **300** via transceiver **301**. Transceiver **301** may be operable to convert the received wireless communication signal into a desirable format and store the received information within storage medium **303**. The received information may then be processed by electronic device **300**.

In one embodiment, electronic device **300** may be operable as an audio player configured to play digital representations of music. For example, electronic device **300** may also include an MP3 player operable to process the received information into an audio signal. Therefore, electronic device **300** may be used to receive wirelessly communicated MP3 audio files and play these files using an MP3 player when desired. In another embodiment, electronic device **300** may be configured as a PDA wherein the PDA includes a web browser operable to wirelessly communicate with the Internet. The PDA device may include a user interface allowing a user to select information to be wirelessly communicated to electronic device **300**.

By providing a website of selectable information, the PDA devices may provide an efficient embodiment for electronic device **300** in that is allows a user to access and select information using a wireless communication network and receive the selected information using the same or different wireless communication network. In yet another embodiment, electronic device **300** may be configured as a component operable to receive selective information via wireless communication and communicate the information to a second electronic device such as an automobile sound system, home stereo, etc.

For example, electronic device **300** may utilize transceiver **301** to receive wirelessly communicated information. Electronic device **300** may then be coupled to an automobile sound system using an interface and communicate the received information to the automobile sound system. In this manner, electronic device **300** may be used to provide the automobile sound system with audio files received via wireless communication.

In another embodiment, electronic device **300** may be operable to communicate the received audio information to an audio system via a localized communications-signaling network. One such network may include utilizing t"Bluetooth" communication standard, used to provide communication between electronic devices in a proximal setting. In one embodiment, electronic device **300** may be integrated into an audio component such as a radio receiver. Electronic device **300** integrated into an audio component may be configured to process digital audio files wirelessly communicated to an audio component. In another embodiment, electronic device **300** may be operable to communicate with an analog receiver at a predetermined frequency.

For example, a specific frequency may be selected (i.e., 93.7 MHz) for communicating the wireless received selected information from electronic device **300** to a localized audio system. Electronic device **300** communication of the wirelessly received information allows a conventional receiver to receive the selected audio information. In one embodiment, the conventional receiver may be configured to receive a digital sub-carrier, on-carrier, or other within a specified frequency. Therefore, electronic device **300** may be operable to locally transmit the signal at a specific frequency thereby allowing the conventional receiver to receive the information. In another embodiment, electronic device **300** may be operable to scan plural bandwidths to receive the selective information. For example, transceiver **301** may be operable to receive selective information across several frequencies and process the received information accordingly.

In another embodiment, electronic device **300** may be operable to scan several frequencies to obtain the desirable information. For example, a user may select several Internet broadcasts comprised of streaming audio information. Therefore, the information may be transmitted across several wireless frequencies receivable by electronic device **300**. Electronic device **300** may then be operable to allow a user to scan wirelessly communicated Internet broadcast signals thereby providing a user selected virtual broadcast radio network. In another embodiment, electronic device **300** may include a

user interface operable to communicate with an Internet website operable to display selectable audio information. The Internet website may be configured as a user-preferred environment displaying a users selected audio information. Internet broadcast selections, streaming audio selections, etc.

With a display device for displaying a Website having selectable information, electronic device **300** may allow a user to select audio information via a user interface and receive the selected information via wireless communication thereby providing a customizable WebRadio device for the user. In another embodiment, electronic device **300** may be a modular device configured to be coupled to, for example, a portion of a cars interior. For example, electronic device **300** may be mounted to a portion of a car's console thereby providing a removably coupled electronic device operable to wirelessly receive selected audio information. As a removable device, electronic device **300** may also be coupled to a home audio system, a portable radio system or other systems thereby providing a versatile electronic device operable to receive wirelessly communicated selected audio information.

In another embodiment, electronic device **300** may be operable as a PDA and/or a cellular phone that may be mounted to an automobile's console. Electronic device **300** may then integrate with a user's automobile to provide an all-encompassing communications device. For example, electronic device **300** configured as a PDA and cellular phone may allow for communication with a user's email account, voice mail account, the Internet, as well as allowing for the receipt of selected audio information via wireless communication. Electronic device **300** may be operable in a hands-free mode allowing a user to maintain safe driving fundamentals. During use, electronic device **300** may be processing selective audio information for communicating with an automobile audio system and may further be operating to receive incoming cellular calls.

Electronic device **300** may be set-up by the user to pause the music being played and allow the received cellular call to be communicated either via an independent speaker or utilizing the automobiles "audio system." Additionally, electronic device **300** may be operable to adjust the listening level of an automobile's audio system, it may play received voice mail messages, allow a user to view the Internet, etc. In one embodiment, electronic device **300** may be operable as a dual mode electronic device capable of receiving both digital and analog wireless communication signals. In this manner, electronic devices may efficiently utilize available bandwidth for receiving selected information from a communications engine. For example, transceiver **301** may be a wireless communications modem operable to receive digital or analog signals.

FIG. **4** illustrates a graphical user interface (GUI) for displaying selectable audio information according to one aspect of the present invention. The GUI may be operable with a computer system, cellular device, PDA, or other electronic devices or systems operable to display the GUI of FIG. **4**. The GUI, shown generally at **400**, may be displayed using a conventional web browser **402** such as Microsoft® Internet Explorer, a WAP browser, or other browsers operable to display the audio information. Browser **402** includes browser functions, shown collectively at **403**, for navigating a network such as the Internet or an intranet. Homepage **401** may be displayed using browser **402** and may include several functions, features, information, etc. related to audio information, Home page **401** may be developed using several different types of programming (i.e., HTML, XML, Java, etc.) used to developing a network location or website.

The present invention is not limited to any one specific type of software and may be realized in plurality of ways as can be appreciated by those skilled in the art. Homepage **401** may also include login region **410** allowing a user to log into homepage **401** and display a user-preferred environment. For example, a user may want Radio Dial **412** to appear when a user logs into homepage **401**. In another embodiment, a user may want to view a current playlist selected by the user or the status of wirelessly communicated playlist, A user may also provide demographic information allowing advertisers to access the demographic information and provide advertisements based upon the demographic information. For example, an advertiser may want to target Hispanic females in the 21-25 year old age group.

Through providing demographic information to advertisers, when a user logs into homepage **401** selective advertising can be "targeted" for a group of users. Homepage **401** may also include several tabs for efficiently navigating homepage **401**. Library tab **405** may be provided to allow a user to browse available audio information that may be presented by title, genre, artist, decade, culture, etc. Store tab **407** may also be provided for locating items available for purchase such as CDs, PDA devices, MP3 players, wireless communication hardware, interfaces, software or other types of products that may be purchased while on-line. Chat tab **408** may also be provided allowing a user to chat with other users of home page **401**. For example, a guest musical artist may be available to chat with visitors of home page **401** via a chat page associated with chat tab **408**. Home page **401** may also include contest tab **409** for displaying current contests, prizes, and/or winners.

Radio tab **406** may also be provided for displaying audio information. For example, radio tab **406** may display a collective menu **411** of selectable functions or features associated with audio information. Top ten lists may be provided to a user based on several different billboard polls or genres. A search engine may be provided allowing a user to search for a specific type of audio information such as an artist, song title, and genre. Internet radio station, etc. In one embodiment, a user may input the lyrics to a song within the search engine. As such, the search engine may locate several different songs having the desirable lyrics and allow a user to select the search results. A user may also use a select a device feature that allows a user to select a destination device for communicating selected audio information. For example, a user may want to communicate a playlist to several different devices such as a PDA, a home computer system, a work computer system, etc.

As such, a user can communicate selective information to several devices without having to download the information separately for each device. A send a friend link may also be provided allowing a user to send selective audio information to a friend's electronic device. A user may also join a group comprised of individuals that select a certain genre of music to be communicated to the user's electronic device. For example, a user may want to join a group that plays only 50s swing music. As such, the user could communicate the group's selected songs to the user's electronic device. A user may also utilize an email account provided by homepage **401** allowing a user to correspond with others via email. A user may also access a list of guest DJs that may provide playlists of songs chosen by the guest DJ and selectable by a user.

In one embodiment, a user's radio dial **412** may be provided when a registered user logs into homepage **401**. As such, radio dial **412** may include several functional buttons similar to conventional systems such as a volume control and a station control. However, radio dial **412** surpasses the limi-

tations of conventional systems through providing a programmable radio dial of user customized audio information. Radio dial **412** includes several stations that may be programmed using program interface **413**. The preset stations may include several different types of user customized preset information such as user selected playlists, Internet broadcast stations, top lists, group playlists, artist-selected lists, on-line radio station, conventional radio stations. Internet phone, cellular phone, etc. and other functions, features, or information associated with audio information.

Radio dial **412** may also be displayed as a separate user interface and in some embodiments, does not require a "browsing" environment to view radio dial **412**. For example, an electronic device, such as a PDA, having a display may graphically present radio dial **412** to a user. One example may be using electronic device in association with an automobile audio system. Electronic device may display radio dial **412** and may allow a user to navigate, modify, select, adjust volume, access daytimer, access phone lists, etc. or perform other functions while the electronic device is used in association with an automobile sound system. Therefore, radio dial **412** may be operable as an application for use with several different types of electronic devices (i.e., computer systems, portable computing devices, cellular phones, etc.) operable to display radio dial **412** and in come embodiments may be wirelessly communicated to an electronic device.

In another embodiment, homepage **401** may allow a user to select when to download the information to an electronic device. For example, a user may want to listen to a certain genre of music at a specific time of day thereby allowing a user to select the information. As such, a user may select a different playlist for every day of the week thereby allowing a user to listen to different songs on different days of the week. The user can further identify when the selected playlist should be available for listening. For example, if a user wanted to listen to "playlist #1" on Monday morning during the drive into work between 8:00 am and 9:00 am, the user would enter the time and the day "playlist #1" would be available for listening. In this manner, the playlist may be communicated to the electronic device thereby allowing a user to listen to selective audio information at a desirable time.

FIG. **5**A illustrates a portable radio system having a mount for an electronic device according to one embodiment of the present invention. Portable radio **500** includes a mount **501** operable to receive electronic device **502**. Mount **501** may include a connector operable to provide communications and power to electronic device **502**. During use, electronic device **502** when mounted within portable radio **500** communicates with portable radio to provide remotely received selective audio information. In one embodiment, electronic device **502** may include a user interface allowing a user to access the Internet. Therefore, selective audio information located on the Internet may be accessed by the user and remotely communicated to electronic device **502** coupled to portable radio **500**.

In another embodiment, portable radio **500** may include memory operably located within for storing downloaded information. For example, portable radio **500** may include 32 MB of RAM allowing electronic device **502** to receive selective information and download the selective information to memory located within portable radio **500**. In this manner, the downloaded music may be operable to be played within portable radio **500** while allowing electronic device to be removed from portable radio **500**. Therefore, portable radio **500** including electronic device **502** allows a user to communicate selected audio information to portable radio **500**.

FIG. **5**B illustrates automobile console having a mount for coupling an electronic device according to one aspect of the present invention. Console **510** includes mount **511** operable to receive electronic device **512**. Mount **511** may be located in many different locations within an automobile such as coupled to a sun visor, center console, dashboard, floorboard, etc. Mount **511** allows the user to couple electronic device **512** to the automobile and provide an interface for communication between electronic device **512** and the automobile audio system. Mount **511** may also include a power connection that allows electronic device **512** to use the automobiles power during use. The power connection may also be used in association with a recharging circuit operable to recharge a power supply within the electronic device. During operation, electronic device **512** coupled to mount **511** may receive selected audio information via wireless communication and communicate the selective information to the automobile audio system.

In one embodiment, the automobile may include memory operable associated with the automobile for storing-information. The memory may be used in association with mount **511** and electronic device **512** to store the selected audio information. In this manner, voluminous audio information can be stored within the memory allowing electronic device **512** to receive additional information. In one embodiment, a mount may be provided for a home audio system (not shown) for downloading selected audio information for use with a home audio system. For example, a mount device may be coupled to a home stereo system such that the upon placing an electronic device such as electronic device **500** within the mount, selected audio information may be communicated to the home audio system thereby allowing a home audio system to be used in association with an electronic device.

FIG. **6** illustrates a block diagram of a system for communicating voice mail messages using email according to one embodiment of the present invention. The system, indicated generally at **600**, includes email server **601** coupled to a voice mail storage device **602**. System **600** further includes a computer system or network terminal **603** such as a computer coupled to network **604**. System **600** further includes mount **605** for mounting electronic device **606** for hardwire communication of information. Device **606** may also communicate with network **604** using a wirelessly communication network operably associated with network **604** and coupled, for example, via tower **607**.

During operation, system **600** communicates voice mail messages to a user utilizing email server **601**. For example, if a user receives a voice mail message, email server **601** would be notified and a voice mail message would be sent to the user's email account in the form of an email message. For example, a voice mail message would be sent to a user's email account within intranet **604** in the form of an audio file as an attachment to the email. Upon receiving the email, a user may click on the audio file representing the voice mail message to hear the message left by a caller.

In one embodiment, a user may be accessing the Internet via a phone line and, as such, be unable to receive notification that a voice mail message has been received. System **600** would receive the voice mail message and send an email comprising the voice mail message to the user email account. In this maimer, a user can remain connected to the network and receive voice mail without having to log off or disconnect from the Internet. In one embodiment, a user may receive the voice mail message via a portable electronic device. For example, a user may be using remote device **605** operable to receive wirelessly communicated information. System **600** would receive the voice mail message and forward the voice

mail message to a user's portable electronic device **606**. In this manner, a user may be capable of receiving voice emails at remote locations.

In another embodiment, a user may subscribe to use an Internet email account that may be operably associated with system **600**. Utilizing an Internet email account may allow a user the flexibility to check voice email messages from any location in the world. For example, a user may access a "Hotmail" email account while traveling on business in a foreign country. The user, upon gaining access to the "Hotmail" account, would be able to listen to voice mail messages sent to the user via the "Hotmail" email account. Through utilizing an email account to receive voice mail messages, a user may be afforded great flexibility in communicating voice mail messages. For example, a user may be able to forward a voice mail message received in the form of an email to one or a plurality of other email accounts. In this manner, a voice email message may be sent efficiently to other email users.

For example, a user may maintain a distribution list of individuals working on a particular project that may have a need to hear certain voice email messages. In this manner, a user may efficiently disseminate information to other individuals while adding additional textual information to the body of the email allowing a user to comment on the original voice email message. In another embodiment, a user may forward a received voice email message to another account operable to receive forwarded voice email messages. For example, system **600** may be operable to receive an email message having a voice mail message as an attachment. The system would then be operable to forward the voice mail message to specified phone number, separate email account, and/or voice mail account, etc. thereby providing a user flexibility in receiving voice email.

In one embodiment, a user may utilize an email account to establish an answering service for voice mails. For example, a user's telephone number may be operable with an email account to provide an answering service. A user may record a message for a specified phone number or extension and, upon receiving an incoming call; the recorded message may be played back to incoming the call's initiator. System **600** would then forward the received voicemail message via an email account to the user. For example, a user may have an account set up at a residence for receiving voicemail messages via a user-defined email account. The user could then forward all received voice mails from the home account to an email account at a place of work. Therefore, the user may have complete access to received voicemail messages. In the same manner, a user could set up their work phone number to forward a voicemail message to the user's home email account thereby allowing a user to receive a voicemail at a home email account. Therefore, system **600** may be operable in a plurality of ways to provide email messages comprised of voicemail messages received via a voice mail or email account.

FIG. **7** illustrates a flow chart for providing voice email messages according to one embodiment of the present invention. The method begins at step **701** where a voice mail message is left for a user. The message could be at a residence, place of business, etc. The method then proceeds to step **702** where the message may be stored as an audio file within a database operable to store a file comprised of the voice mail message. Upon storing the file, the method proceeds to step **703** where an electronic mail message may be generated. The electronic mail message may be addressed to the recipient of the voice mail message. The method then proceeds to step **704** where the audio file representing the voice mail message is attached to the electronic message.

Upon attaching the audio file, the method then proceeds to step **705** where the email message may be sent to the email address. Upon sending the email message the method proceeds to step **706** where the method determines if the email message should be sent to a wireless electronic device. If the message is not to be sent to a wireless device, the method proceeds to step **720** where the method ends. If the message is to be sent to a wireless electronic device, the method proceeds to step **707** where a signal may be sent to the wireless electronic device and at step **708** an indication is provided to the electronic device indicating that a voicemail message has been received via a user's email account. The method may then proceed to step **709** where the user decides whether or not to listen to the voice email message. If the user decides not to listen to the voice email message, the method may proceed to step **710** where the method ends. If the user decides to listen to the voice email message, the method proceeds to step **711** where a request may be sent by the electronic device requesting the voice email message be forwarded to the user's electronic device.

At step **712**, the voicemail message may be sent to the user's electronic device. Upon forwarding the voicemail message to the user the method may proceed to step **720** where the method ends. As such, FIG. **7** depicts one method of providing an email message comprised of a voice mail message. Certainly, other methods may be deployed as advancements in technology and are made without departing for the spirit and scope of the present invention.

FIG. **8** illustrates a flow diagram of a method for providing selected audio information to an electronic device according to one embodiment of the present invention, The method begins at step **800** where a user accesses a webpage via the Internet. The webpage may be a home page illustrated in FIG. **4** or other web pages operable to display selectable references to audio information. The method proceeds to step **801** where a user selects desirable audio information. For example, a user may select a single song, a plurality different songs, an entire album, a broadcast station, streaming audio, etc. or other selectable audio information. Upon the user selecting a reference to audio information, the method may proceed to step **802** where a playlist may be created that represents the user's selected audio information.

The playlist may be variable in size and comprised of a plurality of different types of available audio information. Upon creating a playlist, the method may proceed to step **803** where information associated with the playlist is obtained. For example, a list of network or URL locations comprised of the desirable audio information may be obtained. In this manner, desirable audio information may be obtained from many different sources such as URLs, network addresses, hard drives, databases comprised of audio information, etc. The sources may be accessed to obtain the selected audio information.

Upon obtaining data associated with the customized playlist, the method may proceed to step **804** where the user is prompted for a destination for the playlist. For example, a user may want to communicate the selected audio information to a remote electronic device, an automobile audio system, a home stereo system, a home computer, an electronic device coupled to a home network or computer system, etc. or other locations or devices operable to receive the selected audio information. In one embodiment, a user may select a device owned by a friend to accept the selected audio information. For example, a husband may want to send a romantic playlist to his wife on their anniversary. In this situation, the husband would select his wife's electronic device as the receiving device for the selected audio information.

Upon selecting a device, the method proceeds to step **805** where the method determines the destination of the selected audio information. If the information is to be sent to a device via a wire line connection, the method proceeds to step **813** where playlist data is sent to a user via a wire line connection. The method may then proceed to step **814** where the playlist is executed at the device. If the information is to be sent to a device requiring wireless communication, the method proceeds to step **806** where the information is formatted for communicating the information to a wireless electronic device. For example, a wireless PDA device may be selected as a destination device for the selected audio information. The PDA device may include an audio player, such as an MP3 player operable to play or execute MP3 audio files. In such an embodiment, the method could format the information such that the information may be wirelessly communicated and subsequently played by the MP3 player.

Upon formatting the information, the method may then proceed to step **807** where the audio information is wirelessly communicated to the selected device. In some embodiments, the device may be operable to receive a limited amount of information based upon storage capacity of the device (i.e., 16 MB). In such a case, the method may divide the information into component parts and periodically communicate the component parts, such as packets, to the electronic device. Upon communicating the audio information, the method may then proceed to step **808** where the signal may be received by the destination or electronic device.

The method may then proceed to step **809** where the method determines if all of the audio information has been received. For example, if 16 MB or 32 MB of selected audio information was initially transmitted due to capacity limitations of the selected device, the method may query the selected device to determine if capacity is available, If available memory exists, the method may proceed to step **807** where the method may communicate additional audio information based upon the amount of available memory. The method repeats until all of the selected audio information has been transmitted.

Upon communicating the selected information, the method may proceed to step **810** where the playlist may be executed. For example, a user may select a continuous communication of selected audio information (e.g., several hours of music,. Internet broadcast, etc.). As such, the method may continuously play or execute the received audio information. In another embodiment, the method may proceed to step **811** where the method may store or buffer the received information until it is desirable to execute the received selected audio information. As such, upon executing the selected audio information, the method may proceed to step **809** where the method may repeat. In one embodiment, a user may elect to download a broadcast of an on-line radio station. For example, a user may want to listen to a radio station located in a remote location wherein conventional radio receivers could not receive the desired broadcast. For example, a person living in Houston, Tex. may not be able to receive a radio broadcast signal from a radio station in Seattle, Wash. utilizing a conventional radio receiver.

In accordance with the teachings of the present invention, a user may select an on-line broadcast or radio station as all or a pail of the selected audio information. The user may then receive radio broadcasts without having to use a home computer system or conventional radio receiver.

At step **804**, a user may select a device that does not require remote communication of information. For example, a user may elect to communicate the selected audio information to device, such as a personal computer, PDA device, MP3 player, etc. coupled via a network connection to the Internet or an Intranet. The user may receive the selected playlist at the determined device for eventual playing. In one embodiment, a user may select a plurality of devices as destination devices for receiving downloads of the selected audio information. For example, the user may want to download the information to a home stereo system, a PDA device, and an automobile stereo. As such, the selected information may be communicated to more than one destination device. In addition, the format of the download may match or conform to the selected destination device(s).

The present invention may be configured in a plurality of ways to communicate desirable audio information to users by allowing users to select desirable audio information and transmitting the desirable audio information to a specified destination thereby allowing a user to receive on-demand customized audio information. Moreover, the download may occur in an off-line environment, allowing a user to enjoy the selected audio information accessed on-line without having to be on-line or utilizing a browsing environment. In one embodiment of the present invention, the method of FIG. **8** may be modified to allow a user to select a "user group" for receiving customized audio information. For example, a "user group" may include users that prefer contemporary jazz wherein a user may request a certain song. Therefore, a virtual request line may be designed for a specific genre of music allowing "members" to transmit audio information to the "group".

In another embodiment of the present invention, the method may be modified to allow a user to select a specific genre to be transmitted to the users device. For example, a user may elect to have random country and western music transmitted to a destination device. The user could efficiently create a radio station format and have the format received at a destination device.

In a further embodiment, a user may select a group of genres to be downloaded to a desirable device. As such, the method may be modified to allow a user to select several different genres to download random music within the specified genres. In another embodiment, a user may elect to download the same music as another individual. For example, a user may want to download the same music as their best friend. Therefore the user could elect to download the same music as their friend or group of friends. In another example, a user may want to listen to the same music that an artist listens to on a specific weekday of evening. For example, a user may want to listen to the same music that Barry White listens to on a Saturday night.

Therefore, the user may select "Barry White's" Saturday night playlist and receive the same playlist Barry White receives on Saturday night. In another embodiment, the method of FIG. **8** may be modified to allow a user to manipulate song post download. For example, a user may want to store, delete, replay, copy, forward, etc. received audio information. Therefore, the method of FIG. **4** may be modified such that a user can manipulate or process the received audio information in a plurality of ways. In one embodiment of the present invention, an on-line radio station may be provided. For example, the radio station may be created for transmitting audio or on-line broadcasts. The on-line broadcasters or hosts may create their own format for broadcast. For example, an on-line radio station may be provided that transmits only children's songs.

Prior to conception of the present invention, conventional radio stations were monetarily limited to be capable of transmitting music such as children's songs to conventional radio receivers. The present invention, by providing a medium for

transmitting selectable audio information, enables the existence of on-line broadcasting with little or no overhead cost for a host. A user may select an on-line broadcast for on-line or off-line delivery. In another embodiment, on-line broadcast of audio information representing books or novels may be provided to individuals such as the visually impaired. For example, an on-line broadcast station may provide several hours of audio information broadcast representing books or novels to be broadcast with very little overhead.

FIG. **9** illustrates an automobile console having a mount for an electronic device according to one embodiment of the present invention. Console **900** includes a conventional audio system **901** comprised of a receiver **902** and CD player **903**. Interface **904** may be coupled to audio system **901** via plug **905** and cable **908**, which may be coupled to an auxiliary line into audio system **901**. Interface **904** may also include contact **906** for contacting electronic device **907**, Cable **908** may be a multiple conductive cable for providing power from the automobiles power system via a protection circuit or fuse **909** for powering electronic device **907**. In one embodiment, interface **904** may be operable to recharge electronic device **907** utilizing a power source associated with an automobile.

During operation, electronic device **907** may be mounted within interface **904**. Electronic device **907** may also be powered or recharged via power line **910** and communicate with the systems audio system via interface cable or bus line **911**. Audio information communicated to electronic device **907** may be transferred to audio system **901** such that a user may listen to selected audio information. For example, a user may have previously selected a plurality of audio files to be transmitted to electronic device **907**. Electronic device **907** may communicate the selected audio information to the automobiles audio system that utilizes interface **901** thereby allowing the user to listen to selected audio information. In one embodiment, cable **908** may be custom-installed to audio system **901**. For example, the cable may be coupled to an auxiliary line for the system's radio or may be coupled to CD player line **912**.

In another embodiment, a radio manufacturer may provide interface **904** as a standard interface integrated into the audio system, thereby allowing communication between electronic device **907**, audio system **901** and/or console **900**. Electronic device **907** may include a plurality of different types of devices, For example, electronic device **907** may include a PDA device operable to store selected audio information. The information may be either remotely downloaded using an Internet web browser and wireless communication to the PDA device. In another embodiment, selected audio information may communicated to a PDA device via a hard wire coupled to a computer system interfacing with the Internet. In another embodiment, electronic device **907** may include an audio file player operable to play audio files such as MP3s, etc.

The audio files may be remotely or locally communicated to electronic device **907** and upon coupling to audio system **901**, the audio files may be transmitted to audio system **901** in a form receivable by audio system **901**. Although the disclosed embodiments have been described in detail, it should be understood that various changes, substitutions and alterations can be made to the embodiments without departing from their spirit and scope.

The benefits, advantages, solutions to problems, and any element(s) that may cause any benefit, advantage, or solution to occur or become more pronounced are not to be construed as a critical, required, or essential feature or element of the present invention. Accordingly, the present invention is not intended to be limited to the specific form set forth herein, but on the contrary, it is intended to cover such alternatives, modifications, and equivalents, as can be reasonably included within the spirit and scope of the invention as provided by the claims below.

What is claimed is:

1. A media managing method comprising:

storing a media file in a memory system of a portable hand-held device that is not a conventional personal computer or a laptop computer, wherein the portable hand-held device further has a display and a processor;

storing a collection of information about the media file in the memory system, wherein the collection includes data representing a name for the media file;

communicating at least some of the collection from the portable hand-held device to a different electronic device in order to allow a user to view a soft button comprising the name on an associated display of the different electronic device; and

thereafter receiving a signal in the portable hand-held device to begin playing the media file by the portable hand-held device in response to a selection of the soft button at the different electronic device; and

outputting a played version of the media file across a physical interface of the portable hand-held device while the media file remains stored on the portable hand-held device, wherein the physical interface is configured to facilitate a communicative coupling of the portable hand-held device and the different electronic device, further wherein the physical interface is not circular and has a width dimension and a length dimension that is longer than the width dimension.

2. The method of claim **1**, further comprising communicatively coupling the portable hand-held device with a personal computer of a user; and receiving the media file via the communicative coupling.

3. The method of claim **1**, wherein the different electronic device is an automobile sound system component.

4. The method of claim **1**, wherein the different electronic device is a home stereo component.

5. The method of claim **1**, further comprising receiving an indication of an incoming telephone call at the portable hand-held device; and altering an output characteristic of the playing in connection with receiving the indication.

6. The method of claim **1**, further comprising: receiving the signal to begin playing via the physical interface of the portable hand-held device; and recharging a battery of the portable hand-held device from a power source electrically coupled to the portable hand-held device via the physical interface.

7. The method of claim **1**, wherein the soft button comprises a textual display of the name in a selectable location on the associated display, wherein the name is selected from a group consisting of a user customized name, a playlist name, a title, and an artist name.

8. The method of claim **1**, further comprising receiving the signal to begin playing in response to a soft button selection made via a user interaction with an input device of the different electronic device, wherein the input device is selected from a group consisting of a touch screen, a mouse, a keyboard, a toggle disk, a knob, and an actual physical button.

9. A media playing method comprising:

receiving an over the air download of a media file at a portable electronic device that has a display, a memory, and a processor;

receiving a collection of information associated with the media file via the over the air download, the collection of information representing a name associated with the media file;

saving the media file in the memory;

maintaining an association between the media file and the name at the portable electronic device;

communicating information that represents at least the name from the portable electronic device to a different electronic device such that a user may view a soft button comprising the name depicted on a different display that is associated with the different electronic device; and

thereafter initiating a playing of the media file at the portable electronic device responsive to a selection of the soft button at the different electronic device, and outputting a played version of the media file via the different electronic device while the media file remains stored at the portable electronic device.

10. The method of claim **9**, wherein the media file is an audio file.

11. The method of claim **9**, wherein the media file is a voicemail message and the name identifies a sender of the voicemail message.

12. The method of claim **9**, wherein the portable electronic device is operable as a wireless telephone and at least some of the information communicated from the portable electronic device is to enable the soft button to be a selectable GUI element that comprises a textual representation of the name and acts as a selectable link for launching the playing of the media file at the portable electronic device, the soft button generally simulating a user selectable functional button for selection of the media file and including the textual representation.

13. The method of claim **12**, wherein the display of the portable electronic device is a touch screen display.

14. The method of claim **9**, further comprising initiating a different playing of the media file in connection with a selection of a representation of the name while it is being presented on the display of the portable electronic device.

15. The method of claim **9**, wherein the media file comprises a video file.

16. A media playing method comprising:

recognizing that a portable electronic device is coupled to a sound system that has an associated display and a user interface mechanism, wherein the portable electronic device is a hand-held device having a display, a memory, and a processor, and that is not a conventional personal computer or laptop computer, further wherein the portable electronic device is configured to save a media file in the memory of the portable electronic device, to associate the media file with a name, to store additional data that represents the name, to include the name in a menu of available content, to present the name on the display of the portable electronic device as a selectable icon, and to communicate a collection of information representing the name to the sound system;

receiving the collection of information in the sound system;

utilizing the collection of information to present a soft button on the associated display;

recognizing an interaction with the user interface mechanism as a selection of the soft button; and

requesting a playing of the media file by the portable electronic device in connection with the selection of the soft button so that the playing of the media file can be output via the sound system while the media file remains stored on the portable electronic device, wherein the receiving and requesting involve communicating across a physical interface that has multiple conductive elements and a contacting portion for the multiple conductive elements that is non-circular and configured to releasably couple with the portable electronic device.

17. The method of claim **16**, wherein the sound system is selected from a group consisting of a home stereo sound system and an automobile sound system.

18. The method of claim **16**, wherein the sound system is configured to receive an in-band on channel digital radio broadcast signal.

19. The method of claim **18**, wherein the sound system is further configured to allow a user to identify a certain song and to request the certain song.

20. The method of claim **16**, wherein the media file comprises a video file.

21. The method of claim **16**, wherein the coupling is via a portable electronic device mount that includes the physical interface and a cable that houses the multiple conductive elements.

22. An audio system comprising:

an electronic device having a non-circular portable device interface that allows for communication of data and power;

the non-circular portable device interface configured to provide at least a portion of a link between the electronic device and a portable electronic device that has a memory, a processor, a display, and software saved at the portable electronic device, the software configured to direct the portable electronic device to save an audio file in the memory, to save a name of the audio file in the memory, to associate the audio file with the name, to include the name in a menu of available content, and to communicate a collection of information comprising the name to the electronic device; and

the electronic device configured to utilize the collection of information to present a soft button on a display associated with the electronic device and to allow a user: (1) to interact with a user interface device communicatively coupled to the electronic device to navigate through at least at least a portion of content saved in the memory of the portable electronic device; (2) to view at least a partial representation of the menu on the display associated with the electronic device; and (3) to choose the audio file for processing by using the user interface device to select a soft button representation of the name displayed on the associated display so that responsive to the selection the audio file can be played by the portable electronic device and to be output via the electronic device while the audio file remains stored on the portable electronic device.

23. The system of claim **22**, wherein the electronic device is configured to receive the collection of information and to present the name on the associated display by software embedded in the electronic device as firmware.

24. The system of claim **22**, wherein the partial representation of the menu comprises at least two soft buttons.

25. The system of claim **22**, wherein the associated display is a touch screen display and the touch screen display is the user interface device.

26. The system of claim **22**, wherein the user interface device is selected from a group consisting of a touch screen, a hands-free interface device, a knob, a click wheel, and a physical button.

27. The system of claim **22**, wherein the electronic device is selected from a group consisting of an automobile sound system component, a home audio component, and a satellite receiving device.

28. The system of claim **22**, further comprising a cable having multiple conductive elements, wherein the cable provides at least a portion of the link between the electronic device and the portable electronic device, further wherein a battery of the portable electronic device can be recharged via the cable, wherein the cable is to interface with a physical interface of the portable electronic device that is not circular and has a width dimension and a length dimension that is longer than the width dimension.

29. The system of claim **22**, wherein the electronic device comprises a digital receiver configured to receive in-band on-channel transmissions.

30. The system of claim **22**, wherein the portable device interface comprises an RF transceiver.

* * * * *

US007634228C1

(12) EX PARTE REEXAMINATION CERTIFICATE (10186th)

United States Patent

White et al.

(10) Number: US 7,634,228 C1

(45) Certificate Issued: *Jun. 10, 2014

(54) **CONTENT DELIVERY SYSTEM AND METHOD**

(75) Inventors: **Russell W. White**, Austin, TX (US); **Kevin R. Imes**, Austin, TX (US)

(73) Assignee: **Affinity Labs of Texas, LLC**, Austin, TX (US)

Reexamination Request:
No. 90/011,982, Oct. 26, 2011

Reexamination Certificate for:

Patent No.:	**7,634,228**
Issued:	**Dec. 15, 2009**
Appl. No.:	**11/681,444**
Filed:	**Mar. 2, 2007**

(*) Notice: This patent is subject to a terminal disclaimer.

Related U.S. Application Data

(63) Continuation of application No. 09/537,812, filed on Mar. 28, 2000, now Pat. No. 7,187,947.

(51) **Int. Cl.**
H04H 40/00 (2008.01)

(52) **U.S. Cl.**
USPC **455/3.06**; 455/3.05; 455/556.1; 455/557; 455/566

(58) **Field of Classification Search**
None
See application file for complete search history.

(56) **References Cited**

To view the complete listing of prior art documents cited during the proceeding for Reexamination Control Number 90/011,982, please refer to the USPTO's public Patent Application Information Retrieval (PAIR) system under the Display References tab.

Primary Examiner — Colin Larose

(57) **ABSTRACT**

A media managing method is disclosed. A method links a graphical interface soft button with a media file saved in a memory system of a portable electronic device, maintains a collection of information that represents the graphical interface soft button in the memory system, and communicates at least some of the collection to a different electronic device in order to allow a user to view a representation of the graphical interface soft button on an associated display of the different electronic device. The method further receives a signal to begin playing the media file in response to a selection of the representation.

At the time of issuance and publication of this certificate, the patent remains subject to pending reexamination control number 95/001,281 filed Feb. 3, 2010. The claim content of the patent may be subsequently revised if a reexamination certificate issues from the reexamination proceeding.

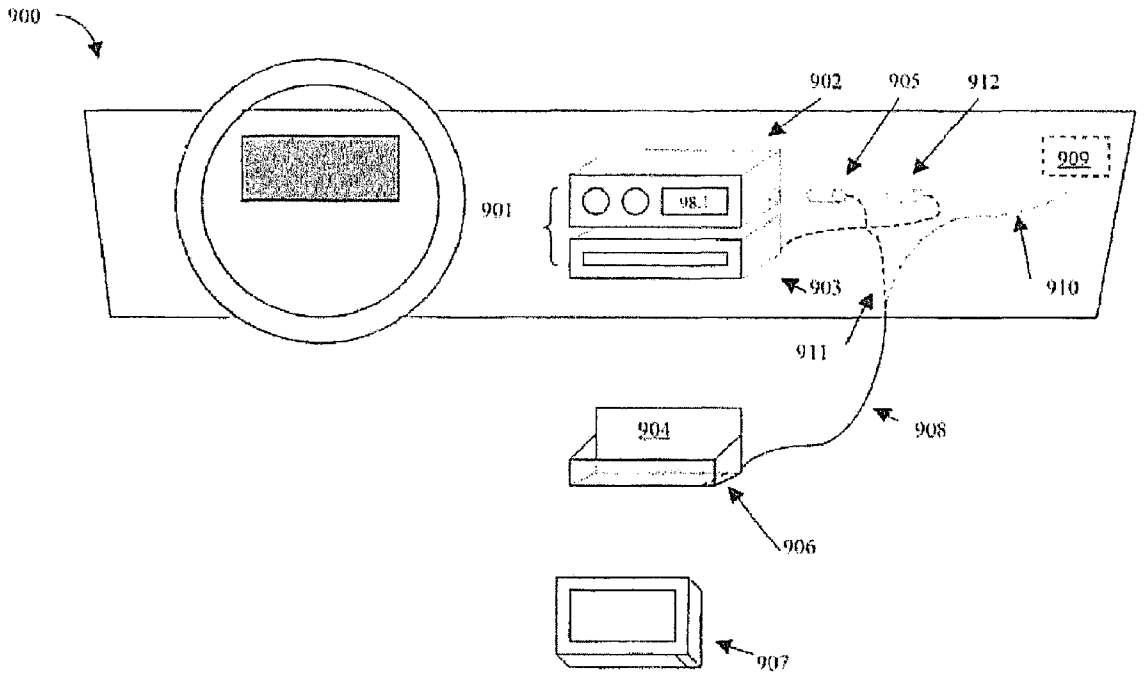

EX PARTE REEXAMINATION CERTIFICATE ISSUED UNDER 35 U.S.C. 307

THE PATENT IS HEREBY AMENDED AS INDICATED BELOW.

Matter enclosed in heavy brackets [ ] appeared in the patent, but has been deleted and is no longer a part of the patent; matter printed in italics indicates additions made to the patent.

AS A RESULT OF REEXAMINATION, IT HAS BEEN DETERMINED THAT:

The patentability of claims **1-21** is confirmed.

Claim **23** is cancelled.

Claim **22** is determined to be patentable as amended.

Claims **24-30**, dependent on an amended claim, are determined to be patentable.

New claims **31-40** are added and determined to be patentable.

22. An audio system comprising:

an electronic device having a non-circular portable device interface that allows for communication of data and power; the non-circular portable device interface configured to provide at least a portion of a link between the electronic device and a portable electronic device that has a memory, a processor, a display, and software saved at the portable electronic device, the software configured to direct the portable electronic device to save an audio file in the memory, to save a name of the audio file in the memory, to associate the audio file with the name, to include the name in a menu of available content, and to communicate a collection of information comprising the name to the electronic device; and

the electronic device configured to utilize the collection of information to present a soft button on a display associated with the electronic device and to allow a user: (1) to interact with a user interface device communicatively coupled to the electronic device to navigate through at least at least a portion of content saved in the memory of the portable electronic device; (2) to view at least a partial representation of the menu on the display associated with the electronic device; and (3) to choose the audio file for processing by using the user interface device to select a soft button representation of the name displayed on the associated display so that responsive to the selection the audio file can be played by the portable electronic device and to be output via the electronic device while the audio file remains stored on the portable electronic device*, wherein the electronic device is configured to receive the collection of information and to present the name on the associated display by software embedded in the electronic device as firmware*.

31. A media managing method comprising:

storing a media file in a memory system of a portable hand-held device that is not a conventional personal computer or a laptop computer, wherein the portable hand-held device further has a display and a processor;

storing a collection of information about the media file in the memory system, wherein the collection includes data representing a name for the media file;

communicating at least some of the collection from the portable hand-held device to a different electronic device in order to allow a user to view a soft button comprising the name on an associated display of the different electronic device; and

thereafter receiving a signal in the portable hand-held device to begin playing the media file by the portable hand-held device in response to a selection of the soft button at the different electronic device; and

outputting a played version of the media file across a physical interface of the portable hand-held device while the media file remains stored on the portable hand-held device, wherein the physical interface is configured to facilitate a communicative coupling of the portable hand-held device and the different electronic device, further wherein the physical interface is not circular and has a width dimension and a length dimension that is longer than the width dimension,

wherein the media file is received as an over the air download at the portable hand-held device,

wherein the different electronic device is configured to receive the at least some of the collection and to present the name on the associated display by software embedded in the electronic device as firmware, and

wherein a battery of the portable hand-held device is configured to be recharged from a power source electrically coupled to the portable hand-held device via the physical interface.

32. The method of claim 31, further comprising communicatively coupling the portable hand-held device with a personal computer of a user; and receiving the media file via the communicative coupling.

33. The method of claim 31, wherein the different electronic device is an automobile sound system component.

34. The method of claim 31, wherein the different electronic device is a home stereo component.

35. The method of claim 31, further comprising receiving an indication of an incoming telephone call at the portable hand-held device; and altering an output characteristic of the playing in connection with receiving the indication.

36. A media managing method comprising:

storing a media file in a memory system of a portable hand-held device that is not a conventional personal computer or a laptop computer, wherein the portable hand-held device further has a display and a processor;

storing a collection of information about the media file in the memory system, wherein the collection includes data representing a name for the media file;

communicating at least some of the collection from the portable hand-held device to a different electronic device in order to allow a user to view a soft button comprising the name on an associated display of the different electronic device; and

thereafter receiving a signal in the portable hand-held device to begin playing the media file by the portable hand-held device in response to a selection of the soft button at the different electronic device; and

outputting a played version of the media file across a physical interface of the portable hand-held device while the media file remains stored on the portable hand-held device, wherein the physical interface is configured to facilitate a communicative coupling of the portable hand-held device and the different electronic device, further wherein the physical interface is not circular and has a width dimension and a length dimension that is longer than the width dimension,

wherein the different electronic device is configured to receive the at least some of the collection and to present

the name on the associated display by software embedded in the electronic device as firmware,

wherein the media file is a voicemail message and the name identifies a sender of the voicemail message, and

wherein a battery of the portable hand-held device is configured to be recharged from a power source electrically coupled to the portable hand-held device via the physical interface.

37. A media playing method comprising:

receiving an over the air download of a media file at a portable electronic device that has a display, a memory, and a processor;

receiving a collection of information associated with the media file via the over the air download, the collection of information representing a name associated with the media file; saving the media file in the memory;

maintaining an association between the media file and the name at the portable electronic device;

communicating information that represents at least the name from the portable electronic device to a different electronic device such that a user may view a soft button comprising the name depicted on a different display that is associated with the different electronic device; and

thereafter initiating a playing of the media file at the portable electronic device responsive to a selection of the soft button at the different electronic device, and outputting a played version of the media file via the different electronic device while the media file remains stored at the portable electronic device,

wherein the different electronic device is configured to receive the communicated information and to present the name on the different display by software embedded in the electronic device as firmware, and

wherein a battery of the portable electronic device is configured to be recharged from a power source electrically coupled to the portable electronic device via a physical interface.

38. The method of claim 37, wherein the media file is an audio file.

39. The method of claim 37, wherein the media file is a voicemail message and the name identifies a sender of the voicemail message.

40. The method of claim 37, further comprising initiating a different playing of the media file in connection with a selection of a representation of the name while it is being presented on the display of the portable electronic device.

* * * * *

Exhibit C

US008532641B2

(12) **United States Patent**
White et al.

(10) **Patent No.: US 8,532,641 B2**
(45) **Date of Patent: *Sep. 10, 2013**

(54) **SYSTEM AND METHOD FOR MANAGING MEDIA**

(71) Applicant: **Affinity Labs of Texas, LLC**, Dripping Springs, TX (US)

(72) Inventors: **Russell W. White**, Austin, TX (US); **Kevin R. Imes**, Austin, TX (US)

(73) Assignee: **Affinity Labs of Texas, LLC**, Austin, TX (US)

(*) Notice: Subject to any disclaimer, the term of this patent is extended or adjusted under 35 U.S.C. 154(b) by 0 days.

This patent is subject to a terminal disclaimer.

(21) Appl. No.: **13/673,391**

(22) Filed: **Nov. 9, 2012**

(65) **Prior Publication Data**

US 2013/0065531 A1 Mar. 14, 2013

Related U.S. Application Data

(63) Continuation of application No. 13/117,507, filed on May 27, 2011, which is a continuation of application No. 12/495,190, filed on Jun. 30, 2009, now Pat. No. 7,953,390, which is a continuation of application No. 12/015,320, filed on Jan. 16, 2008, now Pat. No. 7,778,595, which is a continuation of application No. 10/947,755, filed on Sep. 23, 2004, now Pat. No. 7,324,833, which is a continuation of application No. 09/537,812, filed on Mar. 28, 2000, now Pat. No. 7,187,947.

(51) **Int. Cl.**
H04M 3/00 (2006.01)
H04H 40/00 (2008.01)

(52) **U.S. Cl.**
USPC **455/418**; 455/419; 455/3.06; 455/41.3

(58) **Field of Classification Search**
None
See application file for complete search history.

(56) **References Cited**

U.S. PATENT DOCUMENTS

3,582,926 A 6/1971 Hassan
4,291,749 A 9/1981 Ootsuka et al.

(Continued)

FOREIGN PATENT DOCUMENTS

CA 2225910 12/1997
CN 1218258 6/1999

(Continued)

OTHER PUBLICATIONS

Affinity Labs of Texas, LLC (Plaintiff) v. *BMW North America, LLC, et al.* (Defendants), Civil Action No. 9:08CV164 and *Affinity Labs of Texas, LLC* (Plaintiff) v. *Alpine Electronics of America, Inc., et al.*, Civil Action No. 9:08CV171, Order Construing Claim Terms of United States Patent No. 7,324,833, issued on Dec. 18, 2009, pp. 1-31.

(Continued)

Primary Examiner — Erika A Washington

(57) **ABSTRACT**

A music enabled communication system includes a wireless telephone device with a display, a wireless communication module, a rechargeable power supply, a memory system, and a collection of instructions operable to utilize the wireless communication module to stream a signal representing a song to a recipient device using a given asynchronous wireless channel of a localized communications signaling network, to recognize receipt of an incoming call, and to alter the signal in connection with recognizing receipt of the call.

20 Claims, 9 Drawing Sheets

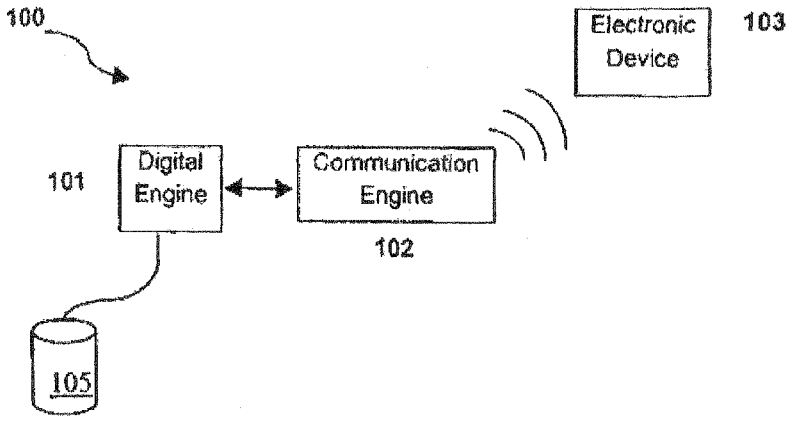

(56) **References Cited**

U.S. PATENT DOCUMENTS

4,314,232	A	2/1982	Tsunoda
4,337,821	A	7/1982	Saito
4,401,848	A	8/1983	Tsunoda
4,407,564	A	10/1983	Ellis
4,419,730	A	12/1983	Ito et al.
4,441,405	A	4/1984	Takeuchi
4,481,584	A	11/1984	Holland
4,536,739	A	8/1985	Nobuta
4,570,217	A	2/1986	Allen et al.
4,582,389	A	4/1986	Wood et al.
4,636,782	A	1/1987	Nakamura et al.
4,716,458	A	12/1987	Heitzman et al.
4,731,769	A	3/1988	Schaefer
4,740,779	A	4/1988	Cleary et al.
4,740,780	A	4/1988	Brown et al.
4,752,824	A	6/1988	Moore
4,795,223	A	1/1989	Moss
4,802,492	A	2/1989	Grunstein
4,807,292	A	2/1989	Sorscher
4,809,177	A	2/1989	Windle et al.
4,812,843	A	3/1989	Champion, III et al.
4,817,203	A	3/1989	Tsurumoto et al.
4,818,048	A	4/1989	Moss
4,827,520	A	5/1989	Zeinstra
4,837,551	A	6/1989	Iino
4,876,594	A	10/1989	Schiffman
4,905,272	A	2/1990	Van de Mortel et al.
4,914,705	A	4/1990	Nigawara
4,977,509	A	12/1990	Pitchford et al.
4,988,976	A	1/1991	Lu
4,995,258	A	2/1991	Frank
4,996,959	A	3/1991	Akimoto
4,999,622	A	3/1991	Amano et al.
5,006,829	A	4/1991	Miyamoto et al.
5,051,735	A	9/1991	Furukawa
5,070,323	A	12/1991	Iino et al.
5,124,915	A	6/1992	Krenzel
5,164,904	A	11/1992	Sumner
5,179,385	A	1/1993	O'Loughlin et al.
5,198,797	A	3/1993	Daidoji
5,203,499	A	4/1993	Knittel
5,214,413	A	5/1993	Okabayashi et al.
5,214,707	A	5/1993	Fujimoto et al.
5,214,793	A	5/1993	Conway et al.
5,239,700	A	8/1993	Guenther et al.
5,257,190	A	10/1993	Crane
5,270,689	A	12/1993	Hermann
5,274,560	A	12/1993	LaRue
5,278,532	A	1/1994	Hegg et al.
5,293,115	A	3/1994	Swanson
5,299,132	A	3/1994	Wortham
5,307,326	A	4/1994	Osawa
5,327,558	A	7/1994	Burke et al.
5,335,743	A	8/1994	Gillbrand et al.
5,341,350	A	8/1994	Frank
5,345,817	A	9/1994	Grenn et al.
5,351,041	A	9/1994	Ikata et al.
5,361,165	A	11/1994	Stringfellow et al.
5,363,355	A	11/1994	Takagi
5,371,510	A	12/1994	Miyauchi et al.
5,388,248	A	2/1995	Robinson et al.
5,400,045	A	3/1995	Aoki
5,400,246	A	3/1995	Wilson et al.
5,404,443	A	4/1995	Hirata
5,408,686	A	4/1995	Mankovitz
5,410,326	A	4/1995	Goldstein
5,414,439	A	5/1995	Groves et al.
5,416,318	A	5/1995	Hegyi
5,418,962	A	5/1995	Bodin et al.
5,420,573	A	5/1995	Tanaka et al.
5,422,565	A	6/1995	Swanson
5,432,904	A	7/1995	Wong
5,440,428	A	8/1995	Hegg et al.
5,442,553	A	8/1995	Parrillo
5,442,557	A	8/1995	Kaneko
5,450,321	A	9/1995	Crane
5,450,471	A	9/1995	Hanawa et al.
5,450,613	A	9/1995	Takahara et al.
5,475,399	A	12/1995	Borsuk
5,475,835	A	12/1995	Hickey
5,479,157	A	12/1995	Suman et al.
5,483,632	A	1/1996	Kuwamoto et al.
5,486,840	A	1/1996	Borrego et al.
5,488,357	A	1/1996	Sato et al.
5,493,658	A	2/1996	Chiang et al.
5,497,271	A	3/1996	Mulvanny et al.
5,504,482	A	4/1996	Schreder
5,504,622	A	4/1996	Oikawa et al.
5,506,595	A	4/1996	Fukano et al.
5,511,724	A	4/1996	Freiberger et al.
5,519,410	A	5/1996	Smalanskas et al.
5,523,559	A	6/1996	Swanson
5,524,051	A	6/1996	Ryan
5,525,977	A	6/1996	Suman
5,528,248	A	6/1996	Steiner et al.
5,528,496	A	6/1996	Brauer et al.
5,532,684	A	7/1996	Katsu
5,534,888	A	7/1996	Lebby et al.
5,539,645	A	7/1996	Mandhyan et al.
5,539,658	A	7/1996	McCullough
5,539,869	A	7/1996	Spoto et al.
5,543,789	A	8/1996	Behr et al.
5,547,125	A	8/1996	Hennessee et al.
5,553,661	A	9/1996	Beyerlein et al.
5,555,172	A	9/1996	Potter
5,555,286	A	9/1996	Tendler
5,555,502	A	9/1996	Opel
5,557,541	A	9/1996	Schulhof et al.
5,568,390	A	10/1996	Hirota et al.
5,572,442	A	11/1996	Schulhof
5,576,724	A	11/1996	Fukatsu et al.
5,586,090	A	12/1996	Otte
5,587,560	A	12/1996	Crooks et al.
5,594,709	A	1/1997	Nagano et al.
5,594,779	A	1/1997	Goodman
5,596,319	A	1/1997	Spry
5,604,676	A	2/1997	Penzias
5,614,895	A	3/1997	Ohomori et al.
5,616,876	A	4/1997	Cluts
5,619,412	A	4/1997	Hapka
5,621,252	A	4/1997	Bucknam
5,625,608	A	4/1997	Grewe et al.
5,625,668	A	4/1997	Loomis et al.
5,627,547	A	5/1997	Ramaswamy et al.
5,638,305	A	6/1997	Kobayashi et al.
5,639,305	A	6/1997	Brown et al.
5,646,608	A	7/1997	Shintani
5,650,929	A	7/1997	Potter et al.
5,653,386	A	8/1997	Hennessee et al.
5,654,715	A	8/1997	Hayashikura et al.
5,657,221	A	8/1997	Warman et al.
5,661,652	A	8/1997	Sprague et al.
5,664,228	A	9/1997	Mital
5,666,102	A	9/1997	Lahiff
5,670,953	A	9/1997	Satoh et al.
5,677,837	A	10/1997	Reynolds
5,682,525	A	10/1997	Bouve et al.
5,684,490	A	11/1997	Young et al.
5,691,695	A	11/1997	Lahiff
5,694,120	A	12/1997	Indekeu et al.
5,699,056	A	12/1997	Yoshida
5,699,255	A	12/1997	Ellis et al.
5,702,165	A	12/1997	Koibuchi
5,712,640	A	1/1998	Andou et al.
5,715,474	A	2/1998	Burke et al.
5,721,827	A	2/1998	Logan et al.
5,732,216	A	3/1998	Logan et al.
5,734,973	A	3/1998	Honda
5,737,706	A	4/1998	Seazholtz
5,742,226	A	4/1998	Szabo et al.
5,742,893	A	4/1998	Frank
5,752,754	A	5/1998	Amitani et al.
5,754,774	A	5/1998	Bittinger et al.
5,754,775	A	5/1998	Adamson et al.

5,757,359	A	5/1998	Morimoto et al.
5,758,311	A	5/1998	Tsuji et al.
5,760,742	A	6/1998	Branch et al.
5,772,534	A	6/1998	Dudley
5,774,070	A	6/1998	Rendon
5,774,793	A	6/1998	Cooper et al.
5,774,827	A	6/1998	Smith, Jr. et al.
5,777,394	A	7/1998	Arnold
5,790,973	A	8/1998	Blaker et al.
5,790,974	A	8/1998	Tognazzini
5,794,164	A	8/1998	Beckert et al.
5,797,089	A	8/1998	Nguyen et al.
5,798,759	A	8/1998	Dahl
5,806,018	A	9/1998	Smith et al.
5,808,224	A	9/1998	Kato
5,808,566	A	9/1998	Behr et al.
5,812,870	A	9/1998	Kikinis et al.
5,819,160	A	10/1998	Foladare et al.
5,822,098	A	10/1998	Morgaine
5,835,732	A	11/1998	Kikinis et al.
5,839,108	A	11/1998	Daberko et al.
5,852,775	A	12/1998	Hidary
5,864,305	A	1/1999	Rosenquist
5,867,494	A	2/1999	Krishnaswamy et al.
5,870,680	A	2/1999	Guerlin et al.
5,875,412	A	2/1999	Sulich et al.
5,878,282	A	3/1999	Mital
5,885,085	A	3/1999	Fujita
5,889,852	A	3/1999	Rosecrans et al.
5,900,564	A	5/1999	Kurakake
5,908,464	A	6/1999	Kishigami et al.
5,914,941	A	6/1999	Janky
5,917,405	A	6/1999	Joao
5,919,239	A	7/1999	Fraker et al.
5,919,246	A	7/1999	Waizmann et al.
5,926,624	A	7/1999	Katz et al.
5,940,767	A	8/1999	Bourgeois et al.
5,952,969	A	9/1999	Ghisler
5,953,005	A	9/1999	Liu
5,953,657	A	9/1999	Ghisler
5,953,659	A	9/1999	Kotzin et al.
5,956,029	A	9/1999	Okada et al.
5,956,651	A	9/1999	Willkie
5,963,916	A	10/1999	Kaplan
5,969,283	A	10/1999	Looney et al.
5,969,826	A	10/1999	Dash et al.
5,974,333	A	10/1999	Chen
5,982,298	A	11/1999	Lappenbusch et al.
5,987,381	A	11/1999	Oshizawa
5,987,394	A	11/1999	Takakura et al.
5,990,803	A	11/1999	Park
5,991,640	A	11/1999	Lilja et al.
5,999,525	A	12/1999	Krishnaswamy et al.
5,999,877	A	12/1999	Takahashi et al.
6,006,115	A	12/1999	Wingate
6,006,161	A	12/1999	Katou
6,007,228	A	12/1999	Agarwal et al.
6,009,355	A	12/1999	Obradovich et al.
6,009,363	A	12/1999	Beckert
6,014,569	A	1/2000	Bottum
6,014,689	A	1/2000	Budge et al.
6,018,571	A	1/2000	Langlois et al.
6,023,232	A	2/2000	Eitzenberger
6,023,241	A	2/2000	Clapper
6,029,064	A	2/2000	Farris et al.
6,032,089	A	2/2000	Buckley
6,041,023	A	3/2000	Lakhansingh
6,047,234	A	4/2000	Cherveny et al.
6,047,327	A	4/2000	Tso et al.
6,055,478	A	4/2000	Heron
6,061,306	A	5/2000	Buchheim
6,083,009	A	7/2000	Kim et al.
6,084,584	A	7/2000	Nahi et al.
6,088,730	A	7/2000	Kato et al.
6,091,067	A	7/2000	Drobot et al.
6,100,884	A	8/2000	Tomita et al.
6,104,334	A	8/2000	Allport
6,114,970	A	9/2000	Kirson et al.
6,115,669	A	9/2000	Watanabe et al.
6,121,282	A	9/2000	Dominianni et al.
6,122,403	A	9/2000	Rhoads
6,128,559	A	10/2000	Saitou et al.
6,131,060	A	10/2000	Obradovich et al.
6,133,853	A	10/2000	Obradovich et al.
6,144,358	A	11/2000	Narayanaswamy et al.
6,144,848	A	11/2000	Walsh et al.
6,147,938	A	11/2000	Ogawa et al.
6,148,261	A	11/2000	Obradovich et al.
6,150,925	A	11/2000	Casazza
6,151,634	A	11/2000	Glaser
6,157,619	A	12/2000	Ozluturk
6,157,725	A	12/2000	Becker
6,160,551	A	12/2000	Naughton
6,161,071	A	12/2000	Shuman et al.
6,163,079	A	12/2000	Miyazaki et al.
6,163,711	A	12/2000	Juntunen et al.
6,167,253	A	12/2000	Farris et al.
6,169,515	B1	1/2001	Mannings et al.
6,175,782	B1	1/2001	Obradovich et al.
6,175,789	B1	1/2001	Beckert et al.
6,177,950	B1	1/2001	Robb
6,178,403	B1	1/2001	Detlef
6,178,514	B1	1/2001	Wood
6,182,006	B1	1/2001	Meek
6,185,491	B1	2/2001	Gray et al.
6,189,057	B1	2/2001	Schwanz et al.
6,192,340	B1	2/2001	Abecassis
6,196,846	B1	3/2001	Berger et al.
6,199,076	B1	3/2001	Logan et al.
6,201,540	B1	3/2001	Gallup et al.
6,202,008	B1	3/2001	Beckert et al.
6,225,984	B1	5/2001	Crawford
6,230,322	B1	5/2001	Saib et al.
6,232,539	B1	5/2001	Looney et al.
6,233,430	B1	5/2001	Helferich
6,236,832	B1	5/2001	Ito
6,236,918	B1	5/2001	Sonoda et al.
6,240,297	B1	5/2001	Jadoul
6,240,347	B1	5/2001	Everhart et al.
6,243,725	B1	6/2001	Hempleman et al.
6,246,935	B1	6/2001	Buckley
6,247,130	B1	6/2001	Fritsch
6,248,946	B1	6/2001	Dwek
6,253,061	B1	6/2001	Helferich
6,255,961	B1	7/2001	Van Ryzin et al.
6,259,892	B1	7/2001	Helferich
6,262,724	B1	7/2001	Crow et al.
6,275,231	B1	8/2001	Obradovich
6,278,531	B1	8/2001	Tesavis
6,278,676	B1	8/2001	Anderson et al.
6,278,842	B1	8/2001	Yamazaki et al.
6,278,884	B1	8/2001	Kim
6,282,464	B1	8/2001	Obradovich
6,289,382	B1	9/2001	Bowman-Amuah
6,292,440	B1	9/2001	Lee
6,292,743	B1	9/2001	Pu et al.
6,301,116	B1	10/2001	Tamura
6,314,094	B1	11/2001	Boys
6,314,326	B1	11/2001	Fuchu
6,330,247	B1	12/2001	Chang
6,332,163	B1	12/2001	Bowman-Amuah
6,335,927	B1	1/2002	Elliott et al.
6,338,044	B1	1/2002	Cook et al.
6,339,706	B1	1/2002	Tillgren et al.
6,339,832	B1	1/2002	Bowman-Amuah
6,344,861	B1	2/2002	Naughton et al.
6,349,352	B1	2/2002	Lea
6,353,637	B1	3/2002	Mansour et al.
6,363,240	B2	3/2002	Ito
6,377,825	B1	4/2002	Kennedy et al.
6,396,164	B1	5/2002	Barnea et al.
6,396,769	B1	5/2002	Polany
6,401,085	B1	6/2002	Gershman et al.
6,407,750	B1	6/2002	Gioscia et al.
6,418,138	B1	7/2002	Cerf et al.
6,418,330	B1	7/2002	Lee
6,418,421	B1	7/2002	Hurtado et al.
6,420,975	B1	7/2002	DeLine et al.

6,421,305 B1 7/2002 Gioscia et al.
6,422,941 B1 7/2002 Thorner et al.
6,425,018 B1 7/2002 Kaganas et al.
6,434,459 B2 8/2002 Wong et al.
6,434,568 B1 8/2002 Bowman-Amuah
6,434,628 B1 8/2002 Bowman-Amuah
6,438,594 B1 8/2002 Bowman-Amuah
6,442,748 B1 8/2002 Bowman-Amuah
6,446,080 B1 9/2002 Van Ryzin et al.
6,449,541 B1 9/2002 Goldberg et al.
6,453,281 B1 9/2002 Walters
6,456,892 B1 9/2002 Dara-Abrams et al.
6,476,825 B1 11/2002 Croy
6,477,580 B1 11/2002 Bowman-Amuah
6,477,665 B1 11/2002 Bowman-Amuah
6,487,663 B1 11/2002 Jaisimha
6,493,546 B2 12/2002 Patsiokas
6,493,743 B2 12/2002 Suzuki
6,496,205 B1 12/2002 White et al.
6,496,692 B1 12/2002 Shanahan
6,496,850 B1 12/2002 Bowman-Amuah
6,501,832 B1 12/2002 Saylor et al.
6,502,213 B1 12/2002 Bowman-Amuah
6,507,762 B1 1/2003 Amro et al.
6,509,716 B2 1/2003 Yi
6,510,210 B1 1/2003 Baughan
6,510,325 B1 1/2003 Mack, II et al.
6,516,466 B1 2/2003 Jackson
6,526,335 B1 2/2003 Treyz et al.
6,529,909 B1 3/2003 Bowman-Amuah
6,529,948 B1 3/2003 Bowman-Amuah
6,539,396 B1 3/2003 Bowman-Amuah
6,549,942 B1 4/2003 Janky et al.
6,549,949 B1 4/2003 Bowman-Amuah
6,550,057 B1 4/2003 Bowman-Amuah
6,559,773 B1 5/2003 Berry
6,564,243 B1 5/2003 Yedidia et al.
6,571,282 B1 5/2003 Bowman-Amuah
6,578,068 B1 6/2003 Bowman-Amuah
6,584,403 B2 6/2003 Bunn
6,587,127 B1 7/2003 Leeke et al.
6,587,835 B1 7/2003 Treyz et al.
6,591,085 B1 7/2003 Grady
6,594,723 B1 7/2003 Chapman et al.
6,594,740 B1 7/2003 Fukuda
6,594,774 B1 7/2003 Chapman et al.
6,601,192 B1 7/2003 Bowman-Amuah
6,601,234 B1 7/2003 Bowman-Amuah
6,606,082 B1 8/2003 Zuberec et al.
6,606,660 B1 8/2003 Bowman-Amuah
6,606,744 B1 8/2003 Mikurak
6,609,105 B2 8/2003 Van Zoest et al.
6,611,537 B1 * 8/2003 Edens et al. 370/503
6,615,199 B1 9/2003 Bowman-Amuah
6,615,253 B1 9/2003 Bowman-Amuah
6,618,039 B1 9/2003 Grant et al.
6,622,083 B1 9/2003 Knockheart et al.
6,629,000 B1 9/2003 Moon et al.
6,629,197 B1 9/2003 Bhogal et al.
6,633,932 B1 10/2003 Bork et al.
6,636,242 B2 10/2003 Bowman-Amuah
6,639,584 B1 10/2003 Li
6,640,238 B1 10/2003 Bowman-Amuah
6,640,244 B1 10/2003 Bowman-Amuah
6,640,249 B1 10/2003 Bowman-Amuah
6,640,306 B1 10/2003 Tone et al.
6,647,257 B2 11/2003 Owensby
6,658,247 B1 12/2003 Saito
6,671,567 B1 12/2003 Dwyer et al.
6,671,715 B1 12/2003 Langseth et al.
6,671,745 B1 12/2003 Mathur et al.
6,671,818 B1 12/2003 Mikurak
6,675,233 B1 1/2004 Du
6,678,215 B1 1/2004 Treyz
6,681,120 B1 * 1/2004 Kim 455/556.1
6,694,200 B1 2/2004 Naim
6,697,824 B1 2/2004 Bowman-Amuah
6,697,944 B1 2/2004 Jones et al.
6,704,394 B1 3/2004 Kambhatla et al.
6,707,889 B1 3/2004 Saylor et al.
6,708,086 B2 3/2004 Richard
6,715,145 B1 3/2004 Bowman-Amuah
6,721,489 B1 4/2004 Benyamin et al.
6,721,710 B1 4/2004 Lueck
6,725,022 B1 4/2004 Clayton et al.
6,728,531 B1 4/2004 Lee
6,731,625 B1 5/2004 Eastep et al.
6,741,980 B1 5/2004 Langseth et al.
6,742,015 B1 5/2004 Bowman-Amuah
6,754,181 B1 6/2004 Elliott et al.
6,760,916 B2 7/2004 Holtz et al.
6,772,212 B1 8/2004 Lau et al.
6,788,528 B2 9/2004 Enners et al.
6,791,907 B2 9/2004 Berhan
6,792,086 B1 9/2004 Saylor et al.
6,792,263 B1 9/2004 Kite
6,792,615 B1 9/2004 Rowe et al.
6,823,225 B1 11/2004 Sass
6,829,475 B1 12/2004 Lee et al.
6,832,316 B1 12/2004 Sibert
6,842,906 B1 1/2005 Bowman-Amuah
6,845,398 B1 1/2005 Galensky et al.
6,862,357 B1 3/2005 Albus et al.
6,888,927 B1 5/2005 Cruickshank et al.
6,888,929 B1 5/2005 Saylor et al.
6,892,067 B1 5/2005 Sharma et al.
6,901,067 B1 5/2005 Kalavade
6,904,264 B1 6/2005 Franz
6,904,449 B1 6/2005 Quinones
6,907,112 B1 6/2005 Guedalia et al.
6,909,708 B1 6/2005 Krishnaswamy et al.
6,912,514 B2 6/2005 Matsushima et al.
6,915,272 B1 7/2005 Zilliacus et al.
6,917,923 B1 7/2005 Dimenstein
6,956,833 B1 10/2005 Yukie et al.
6,963,783 B1 11/2005 Bi et al.
6,963,784 B1 11/2005 Gibbs
6,966,065 B1 11/2005 Kitazato et al.
6,975,835 B1 12/2005 Lake et al.
6,978,127 B1 12/2005 Bulthuis et al.
6,990,208 B1 1/2006 Lau et al.
6,990,334 B1 1/2006 Ito
6,990,464 B1 1/2006 Pirillo
7,013,151 B2 3/2006 Hirokawa
7,020,704 B1 3/2006 Lipscomb et al.
7,058,376 B2 6/2006 Logan et al.
7,065,342 B1 6/2006 Rolf
7,085,710 B1 8/2006 Beckert et al.
7,120,462 B2 10/2006 Kumar
7,123,936 B1 10/2006 Rydbeck et al.
7,124,101 B1 10/2006 Mikurak
7,130,807 B1 10/2006 Mikurak
7,139,626 B2 11/2006 Kataoka et al.
7,145,898 B1 12/2006 Elliott
7,149,543 B2 12/2006 Kumar, II
7,149,772 B1 12/2006 Kalavade
7,200,357 B2 4/2007 Janik et al.
7,209,892 B1 4/2007 Galuten et al.
7,209,943 B1 4/2007 Ching et al.
7,219,123 B1 5/2007 Fiechter et al.
7,321,783 B2 1/2008 Kim
7,321,923 B1 1/2008 Rosenberg et al.
7,324,833 B2 1/2008 White et al.
7,339,993 B1 3/2008 Brooks
7,343,414 B2 3/2008 Lipscomb et al.
7,346,687 B2 3/2008 Lipscomb et al.
7,349,722 B2 * 3/2008 Witkowski et al. 455/569.2
7,376,586 B1 5/2008 Partovi et al.
7,379,541 B2 5/2008 Iggulden et al.
7,437,485 B1 10/2008 Kruglikov et al.
7,440,772 B2 10/2008 White et al.
7,444,353 B1 10/2008 Chen
7,549,007 B1 6/2009 Smith et al.
7,562,392 B1 7/2009 Rhoads et al.
7,711,838 B1 5/2010 Boulter
7,778,595 B2 8/2010 White
2001/0042107 A1 11/2001 Palm
2002/0010759 A1 1/2002 Hitson

2002/0023028	A1	2/2002	Quarendon et al.	
2002/0026442	A1	2/2002	Lipscomb et al.	
2002/0046084	A1	4/2002	Steele et al.	
2002/0049852	A1*	4/2002	Lee et al.	709/231
2002/0058475	A1	5/2002	Patsiokas	
2002/0060701	A1	5/2002	Naughton et al.	
2002/0069244	A1	6/2002	Blair et al.	
2002/0072818	A1	6/2002	Moon et al.	
2002/0144271	A1	10/2002	Behagen et al.	
2002/0164973	A1	11/2002	Janik	
2002/0174013	A1	11/2002	Freeman et al.	
2003/0008646	A1	1/2003	Shanahan	
2003/0010633	A1	1/2003	Abiko et al.	
2003/0105718	A1	6/2003	Hurtado et al.	
2003/0126335	A1	7/2003	Silvester	
2003/0163486	A1	8/2003	Van Der Meulen	
2003/0215102	A1	11/2003	Marlowe	
2004/0078274	A1	4/2004	Aarnio	
2004/0151327	A1	8/2004	Marlow	
2004/0210765	A1	10/2004	Erickson	
2005/0010633	A1	1/2005	Shanahan	
2005/0049002	A1	3/2005	White et al.	
2005/0054379	A1	3/2005	Cao et al.	
2005/0096018	A1	5/2005	White et al.	
2005/0282600	A1	12/2005	Paradice, III	
2006/0039263	A1	2/2006	Trotabas	
2006/0080741	A1	4/2006	Nair	
2006/0094349	A1	5/2006	Slesak et al.	
2006/0105804	A1	5/2006	Kumar	
2006/0206493	A1	9/2006	Lipscomb et al.	
2007/0150963	A1	6/2007	Lee et al.	
2009/0280784	A1*	11/2009	Mousseau et al.	455/414.3

FOREIGN PATENT DOCUMENTS

CN	1218258	A	6/1999
CN	1218258	A	6/1999
DE	4431070		3/1996
DE	19 651 308 Al		10/1996
DE	19651308		10/1996
DE	101 01 702	A1	1/2001
DE	102 05 641 A 1		2/2002
DE	10205641	A1	2/2002
DE	44 31 070	B4	7/2004
DE	4431070		7/2004
DE	20 2004 013 65		12/2004
DE	20200401365		12/2004
EP	333330		9/1989
EP	0 569 343	A1	10/1993
EP	0569343		10/1993
EP	0569243		11/1993
EP	0661676		12/1994
EP	0 675 341	A1	4/1995
EP	0675341		10/1995
EP	0744839		11/1996
EP	0 771 686	A2	7/1997
EP	0771686		7/1997
EP	0 920 016	A2	2/1999
EP	0898378		2/1999
EP	0920016		2/1999
EP	0 918 408	A2	5/1999
EP	0918408		5/1999
EP	0 982 732 Al		1/2000
EP	0982732		1/2000
EP	0982732 Al		1/2000
EP	984584		8/2000
EP	1 146 674	A2	10/2001
EP	1146674		10/2001
JP	59085599		5/1984
JP	63-136828		6/1988
JP	63136828		6/1988
JP	1018712		1/1989
JP	1196735		8/1989
JP	2-301330		12/1990
JP	2301330		12/1990
JP	H4-261576		9/1992
JP	H4261576		9/1992
JP	5077679		3/1993
JP	5-294250		11/1993
JP	5294250		11/1993
JP	6-187597		7/1994
JP	6187597		7/1994
JP	6289118		10/1994
JP	6294659		10/1994
JP	7036382		2/1995
JP	07-129895		5/1995
JP	07129895		5/1995
JP	07-146155		6/1995
JP	07146155		6/1995
JP	7-262493		10/1995
JP	7262493		10/1995
JP	7270171		10/1995
JP	H08-6875		1/1996
JP	8-79814		3/1996
JP	879814		3/1996
JP	H08-79814		3/1996
JP	H0879814		3/1996
JP	8-110231		4/1996
JP	8110231		4/1996
JP	950282		2/1997
JP	9-61514		3/1997
JP	9-74580		3/1997
JP	961514		3/1997
JP	974580		3/1997
JP	10-103966		4/1998
JP	10103966		4/1998
JP	H08-252976		4/1998
JP	10-143349		5/1998
JP	10143349		5/1998
JP	10-149182		6/1998
JP	10149182		6/1998
JP	10173737		6/1998
JP	1998-052033		9/1998
JP	1998052033		9/1998
JP	3056721		12/1998
JP	11-68685		3/1999
JP	11-73192		3/1999
JP	1168685		3/1999
JP	1173192		3/1999
JP	2901445		3/1999
JP	11-96735		4/1999
JP	1196735		4/1999
JP	11-143791		5/1999
JP	11143791		5/1999
JP	1999-0042565		6/1999
JP	19990042565		6/1999
JP	H11-164058		6/1999
JP	11-219580		8/1999
JP	11219580		8/1999
JP	11-068685		9/1999
JP	11-242686		9/1999
JP	1168685		9/1999
JP	11242686		9/1999
JP	H11-242686		9/1999
JP	H11242686		9/1999
JP	11219580		10/1999
JP	11219580	A	10/1999
JP	H11-288558		10/1999
JP	11-317061		11/1999
JP	11317061		11/1999
JP	H11-317061		11/1999
JP	H11317061		11/1999
JP	2000-66974		3/2000
JP	200066974		3/2000
JP	2001-128280		5/2001
JP	2001128280		5/2001
JP	10-356742		10/2002
JP	3890692		12/2006
JP	2007-207257		8/2007
JP	2007207257		8/2007
KR	10-1997-0016743		4/1997
KR	1019970016743		4/1997
KR	20-1997-0012254		5/1997
KR	2019970012254		5/1997
KR	0142256		3/1998
KR	1999-024210		3/1999
KR	1999-0033726		5/1999
KR	19990033393		5/1999
KR	2019990022030		6/1999

KR	2019990022030	U	6/1999
KR	1999-0048723		7/1999
KR	1999-0055970		7/1999
KR	19990048723		7/1999
KR	19990055970		7/1999
KR	1999-0073234		10/1999
KR	100242563		10/1999
KR	100242563	B1	10/1999
KR	19990073234		10/1999
KR	2000-0001465		1/2000
KR	20000001465		1/2000
KR	20000036680		7/2000
KR	20010009302		2/2001
KR	20010028354		4/2001
KR	10-0356742		10/2002
KR	10356742		10/2002
KR	100356742		10/2002
WO	WO 94/18763		8/1994
WO	WO9418763		8/1994
WO	WO 96/04724		2/1996
WO	WO9604724		2/1996
WO	WO 96/07110		3/1996
WO	WO9607110		3/1996
WO	WO 97/13657		4/1997
WO	WO9713657		4/1997
WO	WO 98/21672		5/1998
WO	WO 9819480		5/1998
WO	WO9821672		5/1998
WO	WO 98/19480		7/1998
WO	WO 98/33102		7/1998
WO	WO9819480		7/1998
WO	WO9833102		7/1998
WO	WO 98/47252		10/1998
WO	WO9847252		10/1998
WO	WO 99/06910		2/1999
WO	WO9906910		2/1999
WO	WO 99/18518		4/1999
WO	WO9918518		4/1999
WO	WO 99/23856		5/1999
WO	WO9923856		5/1999
WO	WO 99/28897		6/1999
WO	WO9928897		6/1999
WO	WO 99/35009		7/1999
WO	WO9935009		7/1999
WO	WO 99/43136		8/1999
WO	WO 9943136		8/1999
WO	WO9943136		8/1999
WO	WO 99/12152		11/1999
WO	WO9912152		11/1999
WO	WO 00/07849		2/2000
WO	WO0007849		2/2000
WO	WO 00/38340		6/2000
WO	WO 0038340		6/2000
WO	WO0038340		6/2000
WO	WO 00/54187		9/2000
WO	WO 00/54462		9/2000
WO	WO0054187		9/2000
WO	WO 00/60450		10/2000
WO	WO0060450		10/2000
WO	WO 00/70523		11/2000
WO	WO0070523		11/2000
WO	WO 00/79372	A1	12/2000
WO	WO0079372		12/2000

OTHER PUBLICATIONS

Real Networks, Inc., RealJukebox Plus Manual, 1999, pp. 1-90.
M. Krebs, Cars That Tell You Where to Go, The New York Times, Dec. 15, 1996, section 11, p. 1.
"OnStar" brochure by General Motors Corporation, 1997.
Sun Microsystems, Inc., "What is Jini?", Summary.
Kim Clohessy, Object Technology, Inc., Virtual Machine Technology: Managing Complexity and Providing Portability for Embedded Systems, 2001, pp. 58-60.
Affinity Labs of Texas, LLC, Plaintiff , v. *BMW North America, LLC, et al*., Defendants, C.A. No. 9:08-cv-00164-RC, Affinity's Infringement Contentions, with Infringement Chart Exhibits A-G.
Affinity Labs of Texas, LLC, Plaintiff, v. *Dice Electronics, LLC, et al*., Defendants, C.A. No. 9:08-cv-00163 (Eastern District of Texas), Defendants' Motion to Stay Litigation Pending Reexamination, Filed Jan. 12, 2009, pp. 1-15.
Declaration of John M. Jackson in Support of Defendants' Motion to Stay Litigation Pending Reexamination, Filed on Jan. 12, 2009, pp. 1-2.
Exhibit B to Defendants' Motion to Stay Litigation Pending Reexamination (Ex Parte Reexamination (Ex Parte Reexamination Communication Transmittal Form and Order Granting Request for Ex Parte Reexamination, Issued by the U.S. Patent and Trademark Office on Dec. 12, 2008, pp. 1-16).
Exhibit C to Defendants' Motion to Stay Litigation Pending Reexamination (Affinity Labs of Texas website, http://www.afflabstx.com/, printed on Dec. 29, 2008, Filed on Jan. 12, 4 pages total).
Exhibit D to Defendants' Motion to Stay Litigation Pending Reexamination (United States Patent and Trademark Office, Ex Parte Reexamination Filing Data, Sep. 30, 2008, pp. 1-2).
Affinity Labs of Texas, LLC, Plaintiff, v. *BMW North America, LLC, et al*., Civil Action No. 9:08-cv-00164 RC (Defendants' Joint Motion to Stay Litigation Pending Reexamination, Filed Jan. 13, 2009, pp. 1-8).
Proposed Order on Defendants' Motion to Stay Litigation Pending Reexamination, Filed on Jan. 13, 2009, 1 page total.
Braunstein, J., "Airbag Technology Takes Off," Automotive & Transportation Interiors, Aug. 1996, p. 16.
Adcock, I., "No Longer Square," Automotive & Transportation Interiors, Aug. 1996, pp. 38-40.
Krebs, M., "Cars That Tell You Where to Go," The New York Times, Dec. 15, 1996, section 11, p. 1.
Kraar, L., "Knowledge Engineering," Fortune, Oct. 28, 1996, pp. 163-164.
Heuchert, S., "Eyes Forward: An ergonomic solution to driver information overload," Society of Automobile Engineering, Sep. 1996, pp. 27-31.
Affinity Labs of Texas, LLC, Plaintiff, v. *Apple, Inc*., Defendant, C.A. No. 9:09-cv-00047-RC (Eastern District of Texas), Complaint (pp. 1-7), with Exhibits A, B and C, Filed Mar. 24, 2009, 76 pages in total.
Kumin, Daniel, Stereo Review, "Jukebox Heaven," Jan. 1999, pp. 64-71.
Sorcher, Jamie, Stereo Review, "New for the Road," May 1998, 2 pages.
Whitters, John, The Advertiser, "Is the cassette doomed?" Jul. 16, 1998, pp. 1-2.
Cole, George, Financial Times, "Listen with your eyes: A new music CD format supplies textual information," Oct. 23, 1997, pp. 1-2.
Parker, Dana J., Standard Deviations, "CD-TEXTra! Read all about it!", Oct. 1996, pp. 1-2.
Borrowman, Greg, The Sydney Morning Herald, "Philips Releases Its Latest DVD," 1999, 2 pages total.
Tessler, Franklin N., Macworld, "Mobile MAC, Highway Fidelity," Jun. 2004, pp. 1-3.
Collins, Barry, The Sunday Times, "High-class high-tech—Buyer's guide," 2001, 2 pages.
Familar, Peter, Herald-Sun, "Clever Deck—CD and mini-disc combination," 1998, 1 page.
Gilroy, Amy, Twice, "Panasonic Ships First SD MP3," Dec. 4, 2000, 1 page.
Savetz, Kevin, The Washington Post, "Putting Your MP3 Collection in Drive (Final Edition)," Aug. 10, 2001, pp. 1-3.
Kempainen, Stephen, EDN Access for Design, by Design "In-car computing gets personal," Aug. 17, 1998, pp. 1-7.
Japanese document regarding MP3, May 1999, 2 pages.
Moeller, Mark, Computing Unplugged Magazine, "Software Review, New software products for the Auto PC," 1999-2009, Zatz Publishing, pp. 1-4.
Moeller, Mark, Computing Unplugged Magazine, "Auto PC Power, A survey of resources for Auto PC owners," 1999-2009, Zatz Publishing, pp. 1-5.
Moeller, Mark, Computing Unplugged Magazine, "Auto PC Power, A look at the first year of the Auto PC with Microsoft," 1999-2009, Zatz Publishing, pp. 1-5.
Moeller, Mark, Computing Unplugged Magazine, "Auto PC Power, Next generation AutoPCs make a big debut at CES," 1999-2009, Zatz Publishing, pp. 1-6.

Moeller, Mark, Computing Unplugged Magazine, "Programming Power, Getting started developing software for the Auto PC," 1999-2009, Zatz Publishing, pp. 1-5.
Moeller, Mark, Computing Unplugged Magazine, "Behind the Scenes, The AutoPC: Vision vs. Reality," 1999-2009, Zatz Publishing, pp. 1-7.
Moeller, Mark, Computing Unplugged Magazine, "Product Preview, A Survey of Auto PC 2.0 for software developers," 1999-2009, Zatz Publishing, pp. 1-7.
Moeller, Mark, Computing Unplugged Magazine, "AutoPC Update, Auto PC/Windows CE for Automotive news bites," 1999-2009, Zatz Publishing, pp. 1-4.
Streitz, Norbert A., et al., "Dolphin: Integrated Meeting Support Across Local and Remote Desktop Environments and LiveBoards," Integrated Publication and Information Systems Institute, 1994, pp. 345-358.
Degen, Leo, et al., "Working with Audio: Integrating Personal Tape Recorders and Desktop Computers," May 3-7, 1992, pp. 413-418.
Jun Gibee, H.S., "A Virtual Information Desk on the Internet," University of Ulsan, Sep. 1999, pp. 265-268.
Whittaker, Steve, et al., "TeleNotes: Managing Lightweight Interactions in the Desktop," Lotus Development Corporation, Jun. 1997, pp. 137-168.
Crowder, R.M., et al., "Integration of Manufacturing Information Using Open Hypermedia," Computer in Industry, 1999, pp. 31-42.
Bostrom, Tomas, et al., "Mobile Audio Distribution," Royal Institute of Technology, 1999, pp. 166-172.
Poon, Alex, et al., Xerox Disclosure Journal, vol. 19, No. 2, "Gestural User Interface Technique for Controlling the Playback of Sequential Media," Mar./Apr. 1994, pp. 187-190.
Roy, Deb Kumar, "NewsComm: A Hand-Held Device for Interactive Access to Structured Audio," Massachusetts Institute of Technology, Jun. 1995, pp. 1-12.
Bellotti, Victoria, et al., "Walking Away from the Desktop Computer: Distributed Collaboration and Mobility in a Product Design Team," 1996, pp. 209-218.
Obeysekare, Upul, et al., "The Visual Interactive Desktop Laboratory," Jan.-Mar. 1997, pp. 63-71.
Poon, Sui-Meng, et al., "Integration of Value-Added Audio Playback Capacity Into Computer Network," Nanyang Technological University, 1995, pp. 632-636.
Paksoy, Erdal, et al., "A variable-rate celp coder for fast remote voicemail retrieval using a notebook computer," DSPS R&D Center, Texas Instruments, 1997, pp. 119-124.
Davis, Jeffrey A., "Use of Personal Computers in Satellite Command and Control Systems," Raytheon Systems Company, Oct. 24, 1999, pp. 283-291.
Chan, A., et al., "The PEP-II Project-Wide Database," Stanford University, 1996, pp. 840-842.
Bharat, Krishna, et al., "Migratory Applications," Springer Berlin, vol. 1222, 1997, pp. 1-21.
Greenberg, Saul, "PDAs and Shared Public Displays: Making Personal Information Public, and Public Information Personal," University of Calgary, Mar. 1999, pp. 1-11.
Microsoft, "Introducing Microsift Windows 95—Certificate of Authenticity," 1995, pp. 1-117.
Davis, Richard C., et al., "A Framework for Sharing Handwritten Notes," 1998, pp. 119-120.
Bharat, Krishna A., et al.,"Migratory Applications," UIST '95, Nov. 14-17, 1995, pp. 133-142.
Myers, Brad A., "Collaboration Using Multiple PDAs Connected to a PC," Carnegie Mellon University, 1998, pp. 385-294.
Davis, Richard C., et al., "NotePals: Lightweight Note Sharing by the Group, for the Group," May 15-20, 1999, pp. 338-345.
Rekimoto, Jun, et al., "Augmented Surfaces: A Spatially Continuous Work Space for Hybrid Computing Environments," May 15-20, 1999, pp. 378-385.
Olsen, Jr., Dan R., "Interacting with Chaos," Sep. and Oct. 1999, pp. 42-54.
Robertson, Scott, et al., "Dual Device User Interface Design: PDAs and Interactive Television," Apr. 13-18, 1996, pp. 79-86.
Bharat, Krishna, et al., Migratory Applications, "Mobile Object Systems Towards the Programmable Internet," Springer Berlin/Heidelberg, vol. 1222/11997, 1997, pp. 1-134.
Streitz, Norbert A., et al., "i-Land: An Interactive Landscape for Creativity and Innovation," Proceedings of the ACM Conference on Human Factors in Computing Systems, May 15-20, 1999, pp. 120-127.
Jost, Kevin, Automotive Engineering International, "The car as a mobile-media platform," May 1998, pp. 49-53.
Hewlett Packard, "HP Jornada 430/430se Palm-Size PC, User's Guide," Edition 1, 1999, pp. 1-151.
Shimpi, Anand Lal, Empeg, Ltd., "MP3 meets Car Audio: Empeg Mark II in-dash Car MP3 Player," Sep. 18, 2000, pp. 1-17.
Clarke, Peter, EE Times, "Engineers drive craze for MP3 audio players," Feb. 5, 1999, pp. 1-4.
Buckley, Stephen J., et al., "The Car as a Peripheral, Adapting a Portable Computer to a Vehicle Intranet," SAE Technical Paper Series, 98C030, Oct. 19-21, 1998, pp. 1-14.
BMW, "Owner's Manual, On-board monitor with navigation system," 1996, pp. 1-81.
Sodeikat, Heinz, "Euro-Scout is facing the German 1994 Market," 1994, pp. 551-556.
Yepp, "Digital Sounds—yepp—YP-E32/E64102-291," Oct. 23, 1999, pp. 1-46.
Park, Ha-Young, The Customer Times, "Portable Computer Music, MP3 File and MP3 Player rise as the Next Generation Audio Format," May 1999, pp. 1-2.
Request for Ex Parte Reexamination Under 35 U.S.C. .sctn.302 for U.S. Patent No. 7,324,833, Filed on Nov. 7, 2008 (pp. 1-21).
Menta, Richard, "1200 Song MP3 Portable Is a Milestone Player," Jan. 11, 2000, pp. 1-3.
Lind, R., et al., "The Network Vehicle—A Glimpse into the Future of Mobile Multi-Media," Sep. 1999, pp. 27-32.
Palm PC User'S Guide, "Chapter 6, Information Backup and Exchange," pp. 69-148.
Amy Gilroy Mobile Electronics, "Apple's iPod Seen Transforming Car Audio Business," 1 page.
Amy Gilroy, Mobile Electronics, "OEM Integrators Embrace iPod's Success," 1 page
FCC Website, "Broadband PCS," available at http://wireless.foc.gov/services/index.htm? job=service.sub.--home&id=broadband.sub.--pcs (accessed Nov. 9, 2009).
R. Lind, et al., "The Network Vehicle—A Glimpse into the Future of Mobile Multi-Media," 17th AIAA/IEEE/SAE Digital Avionics Sys. Conference Proceedings, Oct. 31 to Nov. 7, 1998, at I21-1 to I21-8.
Business Wire, "HUM MP3 Software Turns Windows CE Handheld Computers Into Portable Music Players," May 24, 1999, pp. 1-2.
Panasonic, "Portable DVD/Video CD/CD Player, Operating Instructions, DVC-L1OD," 1998, pp. 1-84.
Factiva, Hardware Review, "Lost in the Supermarket," Mar. 1, 2000, pp. 1-4.
Sony, "New Technical Theory for Servicing MZ-R5ST Operation Manual," pp. 1-62.
"Phillips PSA[128 MAX," PC Authority Reviews, May 1, 2003, pp. 1-2.
"Targa TMU-401," PC Authority Reviews, Oct. 8, 2003, pp. 1-2.
"Targa TMU-604," PC Authority Reviews, Oct. 8, 2003, pp. 1-2.
U.S. Patent and Trademark Office, Right of Appeal mailed Oct. 1, 2012, with Notice of Appeal filed Oct. 31, 2012 in Reexamination U.S. Appl. No. 95/001,266.
Patent Owner, Affinity Labs of Texas, LL, "Patent Owner's Petition to Terminate Inter Partes Reexamination Proceeding," filed in the USPTO on Dec. 7, 2012 in Reexamination U.S. Appl. No. 95/001,266.
U.S. Patent and Trademark Office, Action Closing Prosecution mailed Oct. 1, 2012, with Reply to Action Closing Prosecution filed Nov. 1, 2012 in Reexamination U.S. Appl. No. 95/001,782.
Patent Owner, Affinity Labs of Texas, LL, "Patent Owner's Petition to Terminate Inter Partes Reexamination Proceeding," filed in the USPTO on Nov. 27, 2012 in Reexamination U.S. Appl. No. 95/001,782.

U.S. Patent and Trademark Office, Action Closing Prosecution mailed Oct. 5, 2012, with Reply to Action Closing Prosecution filed Nov. 5, 2012 in Reexamination U.S. Appl. No. 90/010,333.
Patent Owner, Affinity Labs of Texas, LL, "Patent Owner's Petition to Terminate Inter Partes Reexamination Proceeding," filed in the USPTO on Nov. 9, 2012 in Reexamination U.S. Appl. No. 95/001,281.
U.S. Patent and Trademark Office, Patent Board Decision on Appeal mailed Nov. 1, 2012 in Reexamination U.S. Appl. No. 95/001,263.
Patent Owner, Affinity Labs of Texas, LL, "Patent Owner's Petition to Terminate Inter Partes Reexamination Proceeding," filed in the USPTO on Dec. 7, 2012 in Reexamination U.S. Appl. No. 95/001,263.
Patent Owner, Affinity Labs of Texas, LL, "Patent Owner's Petition to Terminate Inter Partes Reexamination Proceeding," filed in the USPTO on Dec. 7, 2012 in Reexamination U.S. Appl. No. 95/001,262.
Affinity Labs of Texas, LLC, Plaintiff, v. *BMW North America, LLC, et al*., Defendants, C.A. No. 9:08-cv-00164-RC, Affinity's Infringement Contentions, with Infringement Chart Exhibits A-G.
Affinity Labs of Texas, LLC, Plaintiff, v. *Alpine Electronics of America, Inc., et al*., Defendants, C.A. No. 9:08-cv-00171-RC, Affinity's Infringement Contentions, with Infringement Chart Exhibits A-1 to G.
Affinity Labs of Texas, LLC, Plaintiff, v. *Dice Electronics, LLC, et al*., Defendants, C.A. No. 9:08-cv-00171-RC, Affinity's Infringement Contentions, with Infringement Chart Exhibits A-C.
J. Braunstein, "Airbag Technology Takes Off," Automotive & Transportation Interiors, Aug. 1996, p. 16.
I. Adcock, "No Longer Square," Automotive & Transportation Interiors, Aug. 1996, pp. 38-40.
M. Krebs, "Cars That Tell You Where to Go," The New York Times, Dec. 15, 1996, section 11, p. 1.
L. Kraar, "Knowledge Engineering," Fortune, Oct. 28, 1996, pp. 163-164.
S. Heuchert, "Eyes Forward: An ergonomic solution to driver information overload," Society of Automobile Engineering, Sep. 1996, pp. 27-31.
"OnStar" brochure by General Motors Corp., 1997.
Sun Microsystems, Inc., "Why Jini Now?", Aug. 1, 1998, pp. 1-14.
Sun Microsystems, Inc., "What is Jini?",—Summary.
Clohessy, Kim, Object Technology, Inc., Virtual Machine Technology: Managing Complexity and Providing Portability for Embedded Systems, 2001, pp. 58-60.
Mobile GT, "The Architecture for Driver Information Systems."
Request for Ex Parte Reexamination Under 35 U.S.C. §302 for U.S. Patent No. 7,324,833, Filed on Nov. 7, 2008 (pp. 1-21).
Richard Menta, "1200 Song MP3 Portable Is a Milestone Player," Jan. 11, 2000, pp. 1-3.
Rathbone, Andy, "MP3 for Dummies," IDG Books Worldwide, Copyright 1999.
Affinity Labs of Texas, LLC v. *BMW North America, LLC, et al*., C.A. No. 9:08CV164 and *Affinity Labs of Texas, LLC* v. *Alpine Electronics of America, Inc., et al*., C.A. No. 9:08CV171, Eastern District of Texas, Order Construing Claim Terms of United States Pates No. 7,324,833, Dec. 18, 2009, pp. 1-31.
Exhibit B to Third Party Requester's Comments to Patent Owner's Supplemental Reply of Jul. 26, 2010 filed Aug. 25, 2010 in Reexamination U.S. Appl. No. 95/001,262 (Declaration of Dr. Bruce Maggs dated Aug. 25, 2010).
Exhibit A to Third Party Requester's Comments to Patent Owner's Reply of Sep. 9, 2010 filed Oct. 12, 2010 in Reexamination U.S. Appl. No. 95/001,263 (Declaration of Dr. Bruce Maggs dated Oct. 12, 2010).
Nokia, "Quick Guide—Accessories Guide," Copyright 1999.
Cai, Jian, et al., "General Packet Radio Service in GSM," IEEE Communications Magazine, Oct. 1997.
RealNetworks, "RealPlayer Plus G2 Manual," Copyright 1998-1999.
U.S. Patent and Trademark Office, Office Action in Inter Partes Reexamination mailed on May 24, 2010, in Reexamination U.S. Appl. No. 95/001,262.
U.S. Patent and Trademark Office, Office Action in Inter Partes Reexamination dated Jun. 14, 2010 in U.S. Appl. No. 95/001,223.
U.S. Patent and Trademark Office, Ex Parte Reexamination Communication Transmittal Form dated Jun. 14, 2010 providing "Decision, Sua Sponte, to Merge Reexamination Proceedings," in U.S. Appl. No. 95/001,223.
U.S. Patent and Trademark Office, Office Action in Inter Partes Reexamination of Patent No. 7486926, Control No. 95/001,263, Office Action issued Jul. 9, 2010, 20 pgs.
U.s. Patent and Trademark Office, Office Action in Inter Partes Reexamination of Patent No. 7440772, Reexamination Control No. 95001266, Office Action issued on Aug. 2, 2010, 14 pages.
U.S. Patent and Trademark Office, Office Action mailed May 24, 2010 with Reply filed on Jul. 23, 2010 and supplemental reply filed on Jul. 26, 2010 for Reexamination U.S. Appl. No. 95/001,262.
Third Party Requester's Comments to Patent Owner's Supplemental Reply of Jul. 26, 2010 Pursuant to 37 C.F.R 1.947, filed on Aug. 25, 2010 for Reexamination U.S. Appl. No. 95/001,262.
U.S. Patent and Trademark Office, Office Action mailed Aug. 2, 2010 with Reply filed on Oct. 1, 2010 for Reexamination U.S. Appl. No. 95/001,266.
U.S. Patent and Trademark Offce, Office Action mailed Jul. 7, 2009 with Reply filed on Sep. 9, 2009 for Reexamination U.S. Appl. No. 95/001,263.
Third Party Requester's Comments to Patent Owner's Supplemental Reply of Sep. 9, 2010 Pursuant to 37 C.F.R 1.947, filed on Oct. 12, 2010 for Reexamination U.S. Appl. No. 95/001,263.
U.S. Patent and Trademark Office, Office Action mailed Sep. 2, 2010 with Reply filed on Nov. 2, 2010 for Reexamination U.S. Appl. No. 95/001,281.
Third Party Requester's Comments to Patent Owner's Reply of Oct. 1, 2010 Pursuant to 37 C.F.R 1.947, filed on Nov. 1, 2010 for Reexamination U.S. Appl. No. 95/001,266.
Affinity Labs of Texas, LLC, v. *BMW North America, LLC, et al*., Civil Action No. 9:08CV164, Order Denying Defendant's Motion for Summary Judgment of Non-Infringement of the '833 Patent, filed Oct. 7, 2010, pp. 1-5.
Affinity Labs of Texas, LLC, v. *Hyundai Motor America, Inc.; Hyundai Motor Manufacturing Alabama LLC.; Volkswagen Group of America, Inc*.; and *Kia Motors America, Inc*., Civil Action No. 9:08CV164, Jury Verdict Form, filed Oct. 28, 2010, pp. 1-16.
Affinity Labs of Texas, LLC, vs. *BMW North America, LLC*, et al., Docket 9:08CV164, Oct. 27, 2010, vol. 8 of , pp. 2100 Through 2633, Reporter's Transcript of Jury Trial, pp. 1-88.
Affinity Labs of Texas, LLC, vs. *BMW North America, LLC, et al*., Docket 9:08CV164, Oct. 28, 2010, vol. 9 of 9, pp. 2634 Through 2824, Reporter's Transcript of Jury Trial, pp. 1-19.
Affinity Labs of Texas, LLC, Plaintiff and Counter-Claim Defendant, vs. *Apple Inc*., Defendant and Counter-Claim Plaintiff, Case No. 09-4436-CW, Apple Inc.'s First Invalidity Contentions Pursuant to Patent Local Rule 3-3, filed Jan. 5, 2011, pp. 1-25, with accompanying Appendixes A-G.
GSM 03.64 version 6.0.1 Release 1997, TS 101 350 V6.0.1, 42 pages, Aug. 1998.
Novak, Druce and Quigg, LLP, Third Party Requester's Comments to Patent Owner's Reply of Sep. 14, 2010 Pursuant to 37 C.F.R. 1.947 with Exhibits A-E, mailed Dec. 20, 2010, in Reexamination U.S. Appl. No. 90/010,333.
Declaration of Scott Andrews Under 37 C.F.R. 1.132 with Exhibits A-C, submitted with Comments of Requester, Volkswagen Group of America, Inc., Pursuant to 37 CFR 1.947, mailed Feb. 11, 2011, in Reexamination U.S. Appl. No. 95/001,281.
Declaration of Dr. DeWayne Perry Under 37 C.F.R. 1.132 with Exhibits A-P, submitted with Comments of Requester, Volkswagen Group of America, Inc., Pursuant to 37 CFR 1.947, mailed Feb. 11, 2011, in Reexamination U.S. Appl. No. 95/001,281.
"Handbook for the WorkPad c3 PD Companion" 3Com Corporation, 1998, 240 pages.
"IEEE 100 The Authoritative Dictionary of IEEE Standards Terms, Seventh Edition" Published by Standards Information Network, IEEE Press, 2000, pp. 357 and 994, date unknown.
Kenyon & Kenyon LLP, Comments of Requester, Volkswagen Group of America, Inc., Pursuant to 37 CFR 1.947, mailed Feb. 11, 2011, with Claims Charts (pp. 1-46) and Exhibits 1-11 in Reexamination U.S. Appl. No. 95/001,281.

Kenyon & Kenyon LLP, Comments of Requester, Volkswagen Group of America, Inc., Pursuant to 37 C.F.R. 1.947 mailed Dec. 20, 2010 in Reexamination U.S. Appl. No. 95/001,233 (merged with 90/010,333 and 95/001,264), with Claims Charts (pp. 1-80) and Exhibits 1-11.
Declaration of Scott Andrews Under 37 C.F.R. 1.132 with Exhibits A-C, submitted with Comments of Requester, Volkswagen Group of America, Inc., Pursuant to 37 CFR 1.947, mailed Dec. 20, 2010, in Reexamination U.S. Appl. No. 95/001,233.
Mark Moeller, Computing Unplugged Magazine, "Product Preview, A Survey of Auto PC 2.0 for software developers," 1999-2009, Zatz Publishing, pp. 1-7.
Mark Moeller, Computing Unplugged Magazine, "AutoPC Update, Auto PC/Windows CE for Automotive news bites," 1999-2009, Zatz Publishing, pp. 1-4.
Claim Chart for KR19990033393, Claim 17 of U.S. Patent No. 7,324,833, pp. 1-3.
RIO500, Getting Started Guide for Windows 98 and Macintosh OS 8.6, pp. 1-2.
Norbert A. Streitz, et al., "DOLPHIN: Integrated Meeting Support Across Local and Remote Desktop Environments and LiveBoards," Integrated Publication and Information Systems Institute, 1994, pp. 345-358.
Leo Degen, et al., "Working with Audio: Integrating Personal Tape Recorders and Desktop Computers," May 3-7, 1992, pp. 413-418.
H.S. Jun Gibee, "A Virtual Information Desk on the Internet," University of Ulsan, Sep. 1999, pp. 265-268.
Steve Whittaker, et al., "TeleNotes: Managing Lightweight Interactions in the Desktop," Lotus Development Corporation, Jun. 1997, pp. 137-168.
R.M. Crowder, et al., "Integration of Manufacturing Information Using Open Hypermedia," Computer in Industry, 1999, pp. 31-42.
Tomas Bostrom, et al., "Mobile Audio Distribution," Royal Institute of Technology, 1999, pp. 166-172.
Alex-Poon, et al., Xerox Disclosure Journal, vol. 19, No. 2, "Gestural User Interface Technique for Controlling the Playback of Sequential Media," Mar./Apr. 1994, pp. 187-190.
Deb Kumar Roy, "NewsComm: A Hand-Held Device for Interactive Access to Structured Audio," Massachusetts Institute of Technology, Jun. 1995, pp. 1-12.
Victoria Bellotti, et al., "Walking Away from the Desktop Computer: Distributed Collaboration and Mobility in a Product Design Team," 1996, pp. 209-218.
Upul Obeysekare, et al., "The Visual Interactive Desktop Laboratory," Jan.-Mar. 1997, pp. 63-71.
Asim Smailagic, et al., "MoCCA: A Mobile Communication and Computing Architecture," Institute for Complex Engineered Systems, pp. 1-8.
Sui-Meng Poon, et al., "Integration of Value-Added Audio Playback Capacity Into Computer Network," Nanyang Technological University, 1995, pp. 632-636.
Erdal Paksoy, et al., "A variable-rate celp coder for fast remote voicemail retrieval using a notebook computer," DSPS R&D Center, Texas Instruments, 1997, pp. 119-124.
Jeffrey A. Davis, "Use of Personal Computers in Satellite Command and Control Systems," Raytheon Systems Company, Oct. 24, 1999, pp. 283-291.
Niki Davis, "Remote Teaching Via ISDN2 and Desktop Conferencing," Exeter University School of Education, pp. 1-3.
A Chan, et al., "The PEP-II Project-Wide Database," Stanford University, 1996, pp. 840-842.
Krishna Bharat, et al., "Migratory Applications," Springer Berlin, vol. 1222, 1997, pp. 1-21.
EMPEG Car, "MP3 in your dash," Digital Audio Player User Guide, pp. 1-50.
Microsoft, "Getting Started Microsoft. Windows. 98" Second Edition, 1998, pp. 1-138.
Saul Greenberg, "PDAs and Shared Public Displays: Making Personal Information Public, and Public Information Personal," University of Calgary, Mar. 1999, pp. 1-11.
Naohiko Kohtake, et al., "InfoStick: an interaction device for Inter-Appliance Computing," Keio University, pp. 1-15.
Hewlett Packard, User's Guide, HP Jornada 420, Palm-Size PC, pp. 1-75.
Microsoft, "Introducing Microsoft Windows 95—Certificate of Authenticity," 1995, pp. 1-117.
Sony, "New Technical Theory for Servicing, MZ-R5ST Operation Manual," pp. 1-44.
Richard C. Davis, et al., "A Framework for Sharing Handwritten Notes," 1998, pp. 119-120.
Krishna A. Bharat, et al., "Migratory Applications," UIST '95, Nov. 14-17, 1995, pp. 133-142.
Brad A. Myers, "Collaboration Using Multiple PDAs Connected to a PC," Carnegie Mellon University, 1998, pp. 385-294.
Richard C. Davis, et al., "NotePals: Lightweight Note Sharing by the Group, for the Group," May 15-20, 1999, pp. 338-345.
Jun Rekimoto, et al., "Augmented Surfaces: A Spatially Continuous Work Space for Hybrid Computing Environments," May 15-20, 1999, pp. 378-385.
Dan R. Olsen, Jr., "Interacting with Chaos," Sep. and Oct. 1999, pp. 42-54.
Scott Robertson, et al., "Dual Device User Interface Design: PDAs and Interactive Television," Apr. 13-18, 1996, pp. 79-86.
Symantec Corporation, "pcANYWHERE32 User's Guide," 1993-1997, pp. 1-216.
Krishna Bharat, et al., Migratory Applications, "Mobile Object Systems Towards the Programmable Internet," Springer Berlin/Heidelberg, vol. 1222/11997, 1997, pp. 1-134.
Diamond Multimedia Systems, Inc., "Rio PMP300, User's Guide," 1998, pp. 1-27.
Sony, "Portable MiniDisc Recorder, Operating Instructions, MZ-R55," 1998, pp. 1-42.
Norbert A. Streitz, et al., "i-Land: An Interactive Landscape for Creativity and Innovation," Proceedings of the ACM Conference on Human Factors in Computing Systems, May 15-20, 1999, pp. 120-127.
Norbert A. Streitz, et al., "Roomware for Cooperative Buildings: Integrated Design of Architectural Spaces and Information Spaces," pp. 1-20.
Direct Cable Connection screen shot, "B1U6U4," 10 pages total.
Direct Cable Connection screen shot, 10 pages total.
IBM, "WordPad z50 Cradle Option—User's Guide," 1990, pp. 1-18.
IBM Mobile Systems, "WorkPad z50 Mobile Companion (2608-1Ax), Hardware Maintenance Manual," Mar. 1999, pp. 1-77.
Kevin Jost, Automotive. Engineering International, "The car as a mobile-media platform," May 1998, pp. 49-53.
Microsoft Corporation, "Windows CE 2.1 Technical Articles, Developing Applications for an Auto PC," Jun. 1999, pp. 1-13.
Infogation Corporation, "InfoGation Corp. Introduces Software Applications for Next-Generation Smart Car Systems," Jan. 8, 1998, pp. 1-2.
Business Wire, "ORA Electronics Announces USB-Compatible TelCar Mark VII Begins Shipping First Quarter of 1999," Jan. 6, 1999, pp. 1-2.
ORA USA, "ORA Electronics Patents Telcar Cellular Telephone Interface," Jul. 6, 1998, pp. 1-2.
"Request for Inter Partes Reexamination of U.S. Patent No. 7,324,833 Pursuant to 37 CFR 1.915," Requestor: Volkswagen Group of America, Inc., Filed on Aug. 21, 2009, pp. 1-61 with Certificate of Mailing, and Claim Charts A-HH.
Yamaha Corporation, "Yamaha Music Sequencer, QY70, Owner's Manual," Chapters 1-11, 1997.
Multi Technology Equipment, "Neo Car Jukebox, Installation and Instruction Manual," pp. 1-30.
Request for Inter Partes Reexamination of U.S. Patent No. 7,187,947, filed on Nov. 13, 2009, with accompanying Claim Charts.
Request for Inter Partes Reexamination of U.S. Patent No. 7,440,772, filed on Nov. 13, 2009, with accompanying Claim Charts.
Request for Inter Partes Reexamination of U.S. Patent No. 7,324,833, filed on Nov. 13, 2009, with accompanying Claim Charts.
Request for Inter Partes Reexamination of U.S. Patent No. 7,486,926, filed on Nov. 13, 2009, with accompanying Claim Charts.
Request for Inter Partes Reexamination of U.S. Patent No. 7,634,228, filed on Feb. 3, 2010, with accompanying Claim Charts.
"Universal Serial Bus Specification," Revision 1.1, Sep. 23, 1998, pp. ii-106.

Reply to Office Action Mailed Aug. 5, 2009 in Reexamination Control No. 90/010,333 of U.S. Patent No. 7,324,833 (along with a Supplemental Reply and Second Supplemental Reply).
Response to Notice of Failure to Comply with Inter Partes Reexamination Request Filing Requirements (37 CFR 1.915(d)) filed on Sep. 22, 2009. Requestor: Volkswagen Group of America, Inc. with Replacement Request for Inter Partes Reexamination of U.S. Patent No. 7,324,833 and Claim Charts A-JJ.
The United States Patent and Trademark Office, Office Action Mailed Nov. 9, 2007 in related U.S. Appl. No. 10/947,755.
Nokia 9110 Communicator User Manual, Copyright 1999.
Sony, "Sony Notebook Computer User Guide PCG-717/719," User Guide, 1997.
AirCard, "Sierra Wireless Announces First Cellular Network Interface Card for Notebook PCs," Jun. 21, 1999.
MusicMatch Internet Music System, "MusicMatch Jukebox Reviews," Mar. 4, 2000, May 8, 1999, Aug. 29, 1999, May 8, 1999, Feb. 4, 1997, Aug. 12, 1999, Jan. 24, 2000, Jan. 25, 2000, Feb. 22, 2000, pp. 1-32.
Bluetooth, "Specification of the Bluetooth System, Profiles," Dec. 1, 1999.
J. Schneidawind, "Big Blue Unveiling," USA Today, Nov. 23, 1992, p. 2B.
Nokia Suomi, "Range of suspension GSM products unveiled: Nokia's innovations offer a new dimension to mobile communication," Mar. 13, 1996, 1 page.
Nokia 9000i User's Manual, Copyright 1995-1997.
FCC Website, "Broadband PCS," available at http://wireless.fcc.gov/services/index.htm?job=service_home&id=broadband_pcs (accessed Nov. 9, 2009).
RealNetworks, "RealPlayer plus, RealPlayer 7 Plus User Manual," Copyright 2000, Mar. 6, 2000.
David Pogue, "SoundJam MP Digital Audio System Manual," 1999.
iTunes Wikipedia Page, http://en.wikipedia.org/wiki/ITunes, accessed Jul. 31, 2009.
K. Jost, "The Car as a Mobile-Media Platform," Automotive Engineering International, May 1998, pp. 49-53.
S.K. Kirschner, "Wired Wheels," Popular Science, Mar. 1998, pp. 54-55.
R. Lind, et al., "The Network Vehicle—A Glimpse into the Future of Mobile Multi-Media," 17th AIAA/IEEE/SAE Digital Avionics Sys. Conference Proceedings, Oct. 31-Nov. 7, 1998, at I21-1 to I21-8.
Affinity Labs of Texas, LLC (Plaintiff) v. *BMW North America, LLC, et al.* (Defendants), Case No. 9:08-cv-00164-RC, Answer and Counterclaim of Defendant Volkswagen Group of America, Inc., to Third Amended Complaint, pp. 1-48, filed on Jan. 15, 2010.
Affinity Labs of Texas, LLC (Plaintiff) v. *Alpine Electronics of America, Inc., et al.* (Defendants), Civil Action No. 9:08-cv-171, Order Denying Without Prejudice Defendants' Motion for Summary Judgment, one page, filed on Feb. 25, 2010.
Clarion AutoPC, "Frequently Asked Questions," 1998, pp. 1-3.
Clarion AutoPC, "Frequently Asked Questions," 1999, pp. 1-9.
Stereophile, "Clarion Debuts World's First Automobile PC/Stereo," Dec. 5, 1998, pp. 1-3.
Steve Whalley, "Peripherals to Go: USB in AutoPC," pp. 1-2.
Gregory L. White, "After AutoPC's Hard Ride, Detroit Tries Rebooting In-Car Computers," The Wall Street Journal, pp. 1-3.
Affinity Labs of Texas, LLC, Plaintiff, v. *BMW North America, LLC, et al.*, Defendants, Civil Action No. 9:08-CV-164, Order Denying Defendant's Motion to Dismiss, Filed on Sep. 2, 2009, pp. 1-7.
Clarion Car Audio and Beyond, "1999 Car Audio & Security Product," 1999, pp. 1-60.
Jamie Anderson, "Driving our way soon: the e-car," The Times, Nov. 9, 2000, pp. 1-4.
Clarion Auto PC, "Clarion Auto PC Owner's Manual," 1998, pp. 1-177.
Delphi Automotive Systems, "The Personal Productivity Vehicle," 1998, pp. 1-2.
Delphi Delco Electronics Systems, "On-Board Architecture," 1997, pp. 1-2.
Janet Braunstein, "Diversified Software Industries: Enabling digital instrument panels," Jan. 10, 2001, pp. 1-2.
Microsoft PressPass, "Microsoft Previews New Devices Using Windows CE for Automotive 2.0," Jan. 2000, pp. 1-2.
John Townley, "Countdown to Clarion," Automedia, pp. 1-4.
Gina Hertel, "A Voice-Activated Co-Pilot: ICES," Odds & Ends, Jan. 2000, vol. 8, Issue 1, pp. 1-5.
Kami Buchholz, "Diversified Software launches IVIS," Automotive Engineering Online, 2009, one page.
EMPEG Car webpage, http:/web.archive.org/web/19990430033318/www.empeg.com/main.html, Apr. 30, 1999, one page.
Chris De Herrera, "Windows CE 2.0 Auto PC Pictures," Chris De Herrera's Windows CE Website, Revised Jan. 11, 1999, pp. 1-3.
John Murray, "Inside Microsoft Windows CE," Microsoft Press, 1998, pp. 1-20.
Compaq, Intel, Microsoft, NEC, "Universal Serial Bus Device Class Definition for Audio Devices," Release 1.0, Mar. 18, 1998, pp. 1-130.
Compaq, Intel, Microsoft, NEC, "Universal Serial Bus Specification," Revision 1.1, Sep. 23, 1998, pp. 1-327.
VESA, Video Electronics Standards Association, "VESA Plug and Display (P&D) Standard," Version 1, Revision 0, Jun. 11, 1997, pp. 1-109.
Affinity Labs of Texas, LLC, Plaintiff, v. *BMW North America, LLC, et al.*, Defendants, Case No. 9:08-cv-00164-RC, First Amended Answer and Counterclaim of Defendant Volkswagen Group of America, Inc. to Third Amended Complaint, Filed on Apr. 9, 2010, pp. 1-57.
Affinity Labs of Texas, LLC, Plaintiff, v. *BMW North America, LLC, et al.*, Defendants, Case No. 9:08-cv-00164-RC, Amended Answer and Counterclaim of Defendants Hyundai Motor America, Hyundai Motor Manufacturing Alabama, LLC, and KIA Motors America, Inc. to Plaintiff Affinity Labs of Texas, LLC's Third Amended Complaint, Filed on Apr. 9, 2010, pp. 1-22.
Affinity Labs of Texas, LLC, Plaintiff, v. *BMW North America, LLC, et al.*, Defendants, Case No. 9:08-cv-00164-RC, Plaintiff's Reply to Amended Answer and Counterclaim of Defendants Hyundai Motor America, Hyundai Motor Manufacturing Alabama, LLC and KIA Motors America, Inc. to Plaintiff Affinity Labs of Texas, LLC's Third Amended Complaint, Filed on Apr. 279, 2010, pp. 1-7.
Affinity Labs of Texas, LLC, Plaintiff, v. *BMW North America, LLC, et al.*, Defendants, Case No. 9:08-cv-00164-RC, Plaintiff's Reply to First Amended Answer and Counterclaim of Defendant Volkswagen Group of America, Inc. to Third Amended Complaint, Filed on Apr. 27, 2010, pp. 1-7.
Panasonic, "Portable DVD/Video CD/CD Player, Operating Instructions, DVC-L10D," 1998, pp. 1-84.
Clarion Car Audio and Beyond, "1998 Car Audio & Security Product Catalog," 1998, pp. 1-24.
Affinity Labs of Texas, LLC, Plaintiff, v. *BMW North America, LLC, et al.*, Civil Action No. 9:08CV164, *Affinity Labs of Texas, LLC*, Plaintiff, v. *Alpine Electronics of America, Inc., et al.*, Civil Action No. 9:08CV171, Order Construing Claim Terms of Unites States Patent No. 7,634,228, Filed on May 10, 2010, pp. 1-27.
D. Peters, et al., "Car Multimedia—Mobile Multimedia for the 21st Century," Oct. 5-6, 2000, pp. 1-58.
Stephan Hartwig, et al., "Mobile Multimedia—Challenges and Opportunities Invited Paper," Jun. 19, 2000, pp. 1-12.
John Hanan, "Car Audio Has Come Far since the 8-Track," Knight Ridder/Tribune Business News, Dec. 17, 1999, pp. 1-2.
Business Wire, "Lobjects Announces New Digital Audio Player Technology for the Next-Generation Auto PC," Aug. 4, 1999, pp. 1-2.
Jason Meserve, "Windows Media Player now available for WinCe, (from Microsoft) (Product Announcement)," Network World, Mar. 6, 2000, pp. 1-2.
Business Wire, ""HUM" MP3 Software Turns Windows CE Handheld Computers Into Portable Music Players," May 24, 1999, pp. 1-2.
Rio 600 Getting Started Guide, 2001, pp. 1-169.
IEEE Standard 802.11a, 1999 Edition (Wireless LAN Medium Access Control and Physical Layer Specifications: High-Speed Physical Layer in the 5GHz Band), 1999, 91 pages.
Rod Underhill & Nat Gertler, "The Complete Idiot's Guide to MP3: Music on the Internet," 1999, 44 pages.

Bill Mann, "I Want My MP3! How to Download, Rip, & Play Digital Music," McGraw-Hill 2000, 175 pages.
IEEE Standard 802.11, 1997 Edition (Wireless LAN Medium Access Control and Physical Layer Specifications), 1997, pp. 1-145.
Rio 600 User Guide, Mar. 2001, pp. 1-38.
IBM Wireless Modem for Cellular/CDPD—Quick Reference, Oct. 1995, pp. 1-20.
Creative Sound Blaster Live! Platinum product, documentation, and software: Creative Technology Ltd., Creative Sound Blaster Live! Platinum Getting Started, Sep. 1999, 93 pages.
psa[play Getting Started Guide, (date unknown, contended by defendant Apple Corp. to be prior art under one or more of 35 U.S.C. 102 (a), (b), (f) and (9)), pp. 1-16.
psa[play Getting Started Guide, 2000, pp. 1-16.
Rio 800 User Guide, 2001, pp. 1-38.
Rio 800 Digital Audio Player—Getting Started, 2000, pp. 1-19.
"MP3 Portable Player Goes Elite" The Mac Observer, Nov, 17, 1999, 3 pages.
"MP3 in Your Car Has Arrived" (date unknown, contended by defendant Apple Corp. to be prior art under one or more of 35 U.S.C. 102 (a), (b), (f) and (g)) 1 page.
Photos from Comdex Fall 1999, Nov. 1999, 9 pages.
Photos from Linux World Expo, Winter 1999, Mar. 1-4, 1999, 22 pages.
Craig Knudsen, "MP3 Linux Players," Linux Journal, Jul. 1, 1999, pp. 1-3.
riocar.org—Empeg Car History, (date unknown, contended by defendant Apple Corp. to be prior art under one or more of 35 U.S.C. 102 (a), (b), (f) and (g)), 4 pages.
"Visteon: For Your Listening Pleasure—Any Music, Any Time, Anywhere," Presswire, Jan. 5, 2000, 1 page.
Photographs in email to Hugo Fiennes, Sep. 22, 1999, 4 pages.
HP Jornada 420 User's Manual, 1999, pp. 1-142.
IEEE Standard 802.11b, 1999 Edition (Wireless LAN Medium Access Control and Physical Layer Specifications: Higher-Speed Physical Layer Extension in the 2.4 GHz Band) Sep. 16, 1999, 96 pages.
RealPlayer Plus G2 Manual, 1999, pp. 1-81.
Sony Corporation, Sony Portable MiniDisc Recorder MZ-R90/MZ-R91 Operating Instructions, Doc. No. 3-867-571-22(1), 1999, pp. 1-55.
Empeg Car User Guide, 1999, pp. 1-19.
Empeg Car User Guide (2000) pp. 1-48.
Crowe, Mike. Empeg Car Beta 10a, Mar. 25, 2000, 3 pages.
Emplode Help, (date unknown, contended by defendant Apple Corp. to be prior art under one or more of 35 U.S.C. 102 (a), (b), (f) and (g)) 25 pages.
MPMan F-10 and F-20 digital audio players and review article "MP3 Player Saehan MPMan F20 Review", X-bit labs, Jul. 14, 1999. 6 pages.
Menta, "RIAA Sues Music Startup Napster for $20 Billion" Newswire, Jan. 11, 2000, 4 pages.
The EMusic.com website (formerly www.goodnoise.com) (date unknown, contended by defendant Apple Corp. to be prior art under one or more of 35 U.S.C. 102 (a). (b), (f) and (g)) 2 pages.
EMusic.com prospectus, Sep. 24, 1999, pp. 1-61, Fl-F41.
"Logging On; Setting Sound Free From the CD," The Washington Post, Mar. 3, 2000, pp. 1-3.
"Musk Factory; Retailers Struggle to Expand Listening Options Online," Contra Costa Times Mar. 19, 2000, pp. 1-2.
The MyPlay.com website (date unknown, contended by defendant Apple Corp. to be prior art under one or more of 35 U.S.C. 102 (a), (b), (f) and (g)) 1 page.
Myplay.com Launches Today, PR Newswire. Oct. 13, 1999, pp. 1-2.
Myplay, Inc. Launches Consumer Online Music Service, PR Newswire, Oct. 13, 1999, pp. 1-3.
Empeg.com, "Does Your Car Stereo Run Linux," (date unknown, contended by defendant Apple Corp. to be prior art under one or more of 35 U.S.C. 102 (a), (b), (f) and (g)), 2 pages.
TIA/EIA Interim Standard, Cellular Digital Packet Data, System Specification—Part 403, Mobile Data Link Protocol, Telecommunications Industry Association. Dec. 1997, 83 pages.
"The Listen Up Player from Audio Highway" 1996. 1 page.
"Audio Highway Announces the Listen Up Player," Audio Highway Press Release, Sep. 23, 1996, 2 pages.
Nokia 9110 Quick Guide/Accessories Guide. 1999, pp. 1-31.
"MP3.com and i-drive.com Join Forces to Store and Manage MP3 Files," Business Wire, Oct. 7, 1999, pp. 1-3.
Nomad User Guide, Jun. 1999, pp. 1-34.
Nomad II Getting Started Manual, Jan. 2000, pp. 1-38.
GSM 03.64 version 6.2.0 Release 1997, European Telecommunications Standards Institute, 1999, pp. 1-42.
The i-Drive.com website (date unknown, contended by defendant Apple Corp. to be prior art under one or more of 35 U.S.C. 102 (a), (b), (f) and (g)) 6 pages.
GSM 03.64 version 7.0.0 Release 1997, European Telecommunications Standards Institute, 1999, pp. 1-42.
Riocar.org, "rio car dot org Geek Guide," empeg car Mk.1, Jul. 16, 2010, 4 pages.
The MP3.com website (date unknown, contended by defendant Apple Corp. to be prior art under one or more of 35 U.S.C. 102 (a), (b), (f) and (g)) Screenshots from MP3.com website (date unknown, contended by defendant Apple Corp. to be prior art under one or more of 35 U.S.C, 102 (a), (b), (f) and (g)), 8 pages.
MP3.com and i-drive.com Join Forces to Store and Manage MP3 Files, Business Wire, Oct. 7, 1999, pp. 1-3.
"Digital Download Provider Musicmaker.com Partners With Download Directory Listen.com; Offers Nearly 100,000 Downloadable Tracks Via the Online Directory," PR Newswire, Sep. 15, 1999, pp. 1-3.
MP3.com prospectus, Jul. 21, 1999, pp. 1-81.
Ana Orubeondo, "Trim AirCard 300 Eases Power Demands," InfoWorld, vol. 21, Issue 48. Nov. 29, 1999. p. 46 & 50.
"Net Music Firms to Tap Public Market," Billboard. Jul. 17, 1999. pp. 1-2.
"Cellular for Notebook PCs." CIO Vo.. 13, No. 1. Oct. 1, 1999, p. 90.
"Briefs," Network World. vol. 16, No. 24. Aug. 23, 1999, p. 27.
The MusicMatch.com website (date unknown, contended by defendant Apple Corp. to be prior art under one or more of 35 U.S.C. 102 (a), (b), (f) and (g)) 32 pages.
The MusicMaker.com website (date unknown, contended by defendant Apple Corp. to be prior art under one or more of 35 U.S.C. 102 (a), (b), (f) and (g)), 10 pages.
Qualcomm QCP-1960 User Manual. Apr. 1999, pp. 1-76.
Samsung SCH-3500 User Manual. 1999, pp. 1-108.
Motorola Digital StarTAC User Guide. Mar. 1999, pp. 1-118.
The Rio 500 Getting Started Guide, 1999, pp. 1-2.
"Visteon's Mobile Office Solutions Give Busy Commuters More of What They Need—Time," Canada Newswire, Sep. 15, 1999, 3 pages.
Hiatt, "RIAA Sues Napster, Claiming 'Music Piracy'," MTV News, Dec. 8, 1999, 3 pages.
Sony VAIO Notebook Computer User Guide PCG-731/PCG-735, 1998, pp. 1-131.
Sony VAIO Notebook Computer User Guide PCG-812, 1998, pp. 1-144.
Sony VAIO Notebook Computer User Guide PCG-838, 1999, pp. 1-121.
Sony Service Manual PCG-731/735/737, 1997, pp. 1-22.
Sony Service Manual PCG-723/729, 1998, pp. 1-22.
Boehlart, "Artists to Napster: Drop Dead" Salon.com, Mar. 24, 2000. 3 pages.
Sony Service Manual PCG-812/818, 1998, pp. 1-22.
Sony Service Manual PCG-838, 1999, pp. 1-22.
Patent Owner, Affinity Labs of Texas, LLC, "Patent Owner's Appeal Brief," filed in the USPTO on Dec. 31, 2012 in Reexamination U.S. Appl. No. 95/001,266.
Patent Owner, Affinity Labs of Texas, LLC, "Patent Owner's Petition to Terminate Inter Partes Reexamination Proceeding," filed in the USPTO on Jan. 29, 2013 and U.S. Patent and Trademark Office, Decision on Petition mailed Feb. 22, 2013 in Reexamination U.S. Appl. No. 90/010,333.
U.S. Patent and Trademark Office, Patent Board Final Decision mailed Feb. 15, 2013, in Reexamination U.S. Appl. No. 95/001,263.
Patent Owner, Affinity Labs of Texas, LLC, "Notice of Appeal to the Federal Circuit," filed in the USPTO on Mar. 25, 2013 in Reexamination U.S. Appl. No. 95/001,263.

U.S. Patent and Trademark Office, Reexam Final Rejection mailed Feb. 14, 2013, with Reply to Final Office Action filed Mar. 13, 2013 by Patent Owner in Reexamination U.S. Appl. No. 90/011,982.
U.S. Patent and Trademark Office, Office Action mailed Feb. 7, 2013 and Reply to Office Action filed on May 1, 2013 in U.S. Appl. No. 13/658,210.
U.S. Patent and Trademark Office, Notice of Allowance mailed May 1, 2013 in U.S. Appl. No. 13/117,507.
Affinity Labs of Texas, LLC, Plaintiff, v. *BMW North America, LLC. et al*, Defendants, Case No. 9:08-cv-00164-RC, Defendant Volkwagen Group of America, Inc's Invalidity Contentions, pp. 1-346.
Affinity Labs of Texas, LLC, Plaintiff, v. *Dice Electronics, LLC*., Defendants, Case No. 9:08-cv-00163-RC; *Affinity Labs of Texas, LLC*, Plaintiff, v. *Hyundai Motor America, et al*., Defendants, Case No. 9:08-cv-00164-RC; *Affinity Labs of Texas, LLC*, Plaintiff, v. *JVC Americas Corp., Kenwood USA Corporation*, Defendants, Case No. 9:08-cv-00171-RC, Defendant's Joint Invalidity Contentions and Production of Documents Pursuant to Patent Rules 3-3 and 3-4(b), pp. 1-23 and Exhibits A, B1-B34, C and D.
U.S. Patent and Trademark Office, Issue Notification in U.S. Appl. No. 10/947,754, 1 page, Oct. 1, 2008.
R. Lind, et al. "The Network Vehicle—A Glimpse into the Future of Mobile Multi-Media," Sep. 1999, pp. 27-32.
U.S. Patent and Trademark Office, Order Granting/Denying Request for Ex Parte Reexamination dated Dec. 19, 2008 for U.S. Patent No. 7,324,833 (request granted), pp. 1-13.
Affinity Labs of Texas, LLC, Plaintiff, v. *BMW North America, LLC, et al*., Defendants, Civil Action No. 9:08-cv-164, Order Denying Defendants' Motion to Stay, Filed Feb. 20, 2009, pp. 1-9.
Yamaha Corporation, "QY Data Filer—Owner's Manual," pp. 1-250, 1997.
U.S. Appl. No. 10/947,754, filed Sep. 23, 2004.
U.S. Appl. No. 60/167,179, filed Nov. 23, 1999.
U.S. Appl. No. 09/234,259, filed Jan. 20, 1999.
"Philips PSA [128MAX," PC Authority Reviews, May 1, 2003, 1 pg.
"Sony Network Walkman NW-MS70D," PC Authority Reviews, Oct. 8, 2003, 1 pg.
"Targa TMU-401," PC Authority Reviews, Oct. 8, 2003, 1 pg.
"Targa TMU-604," PC Authority Reviews, Oct. 8, 2003, 1 pg.
"MP3 Players Introduced in the Korean IT Magazines," 1998-1999, pp. 1-15.
MPMan, "MP-F20, User's Guide, Portable MP3 player using the flash memory and a Memory card," [ages 1-16.
PR Newswire Association, Inc., "Delphi's Communiport(R) Technology for Tomorrow, Today Demonstrated at Frankfurt Auto Show," Sep. 15, 1999, pp. 1-8.
Crain Communiations, Inc., "Products," Agilent Technologies Press Release, Feb. 21, 2000, pp. 1-6.
The Washington Times, LLC, John Hanan, Dallas Morning News, "Cars add computer, audiovisual gear," Jan. 14, 2000, pp. 1-3.
Transperfect/Translations, "True and accurate translation of the 1995 BMW Manual, from German into English," Aug. 16, 2005, pp. 1-80.
Heinz Sodeikat, "EURO-SCOUT is facing the German 1994 Market," 1994, pp. 551-556.
Pictures of car navigation systems in a car dashboard, pp. 1-11.
BMW, "The BMW On-Board Navigation System—Technology Takes a Remarkable Turn," 2005, pp. 1-9.
Oldsmobile, "1991 Toronado/Trofeo User's Guide," 1991, pp. 1-41.
Yepp, "Digital Sounds—yepp—YP-E32/E64102-291," Oct. 23, 1999, pp. 1-.46.
U.S. Appl. No. 60/167,179, entitled "System, Method, and Device for Playing Recorded Music on a Wireless Communications Device," by Devon A. Rolf, filed Nov. 23, 1999, pp. 1-48.
Microsoft, "Getting Started, Microsoft Windows 98, for distribution with a new PC only," 1998, pp. 1-145.
PR Newswire, "Alpine Announces Fall Release of Interface Adapter That Enables iPod Control and Playback from In-Vehicle Sound Systems," Jul. 7, 2004, pp. 1-2.
Ha-Young Park, The Customer Times, "Portable Computer Music, MP3 File and MP3 Player rise as the Next Generation Audio Format," May 1999, pp. 1-2.
Peter Clarke, EE Times, "Engineers drive craze for MP3 audio players," Feb. 5, 1999, pp. 1-4.
Rio Car Dot Org Geek Guide, "empeg car Mk. 1," Feb. 21, pp. 1-4.
Hugo Fiennes, Rio Car Dot Org Geek Guide, "MP3 Mobile," Feb. 21, pp. 1-4.
Rio Car Dot Org, Frequently Asked Questions, pp. 1-16.
Diamond Multimedia Systems, Inc., "Rio PMP300 User's Guide," 1998, pp. 1-27.
Stephen J. Buckley, et al., "The Car as a Peripheral, Adapting a Portable Computer to a Vehicle Intranet," SAE Technical Paper Series, 98C030, Oct. 19-21, 1998, pp. 1-14.
"The MP3 Mobile," Apr. 8, 1998, pp. 1-13.
12-Volt Business & Technology Solutions, AutoMedia, "How the Intelligent Data Bus will impact the way you do business," Nov. 1998, pp. 1-2.
Press Release, "Creative Labs Launches Nomad Portable MP3 Players," Apr. 15, 1999, pp. 1-5.
BMW, "Betriebsanleitung Bordmonitor mit Navigation und TV," 1995, pp. 1-82.
BMW "Owner's Manual, On-board monitor with navigation system," 1996, pp. 1-81.
Hewlett Packard, "HP Jomada 430/430se Palm-Size PC, User's Guide," Edition 1, 1999, pp. 1-151.
NEC, "NEC MobilePro 750C, User's Guide," 1998, pp. 1-83.
Microsoft, "Palm PC User's Guide," Microsoft Windows CE, pp. 1-39.
Palm PC User'S Guide, "Chapter 6, Infomiation Backup and Exchange," pp. 69-148.
MPMan, "User's Guide, The Portable MP 3player using the flash memory and SmartMedia card," 1997, pp. 1-35.
Cover Sheet, www.mpman.com, 1 page.
Smart Media Card Slot Diagram, 1 page.
MP Man F20 Logo, 1 page.
MPMan, "User's Guide, The portable MP3 player using the flash memory with variety features including the voice recording, phone/memo browsing, etc.," 1997, pp. 1-47.
Smart Media card diagram and install instructions, pp. 1-4.
Anand Lal Shimpi, Empeg, Ltd., "MP3 meets Car Audio: Empeg Mark II in-dash Car MP3 Player," Sep. 18, 2000, pp. 1-17.
Mark Moeller, Computing Unplugged Magazine, "Software Review, New software products for the Auto PC," 1999-2009, Zatz Publishing, pp. 1-4.
Mark Moeller, Computing Unplugged Magazine, "Auto PC Power, A survey of resources for Auto PC owners," 1999-2009, Zatz Publishing, pp. 1-5.
Mark Moeller, Computing Unplugged Magazine, "Auto PC Power, A look at the first year of the Auto PC with Microsoft," 1999-2009, Zatz Publishing, pp. 1-5.
Mark Moeller, Computing Unplugged Magazine, "Auto PC Power, Next generation AutoPCs make a big debut at CES," 1999-2009, Zatz Publishing, pp. 1-6.
Mark Moeller, Computing Unplugged Mgazine, "Programming Power, Getting started developing software for the Auto PC," 1999-2009, Zatz Publishing, pp. 1-5.
Mark Moeller, Computing Unplugged Magazine, "Behind the Scenes, The AutoPC: Vision vs. Reality," 1999-2009, Zatz Publishing, pp. 1-7.
Kevin Savetz, The Washington Post, "Putting Your MP3 Collection in Drive (Final Edition)," Aug. 10, 2001, pp. 1-3.
Twice, "Study Sees Retail Opportunities for Mobile Multimedia," vol. 14, Issue 15, Jun. 28, 1999, pp. 1-2.
Japanese Webpage, www.kcalgo.kr/jsp/main.jsp, 1 page.
Japanese Webpage, www.kca.go.kr—Brochure Free—Microsoft Internet Explorer, 1 page.
Stephen Kempainen, EDN Access for Design, by Design "In-car computing gets personal," Aug. 17, 1998, pp. 1-7.
Japanese Website, MM MPMANIA.com, http:/mpmania, x-y.net/bbs/zboard.php?id=products&keyword=1998, 1 page.
Japanese document regarding MP3, May 1999, 1 page.
MPMan, "The portable MP3 player using the Flash Memory and Memory card—MP-F20," in Japanese, pp. 1-34.
Japanese Website, MM MPMANIA.com, http:/mpmania, x-y.net/bbs/view.php?id=products&page=1&sn1=&divpage, 1 page.
www.mpman.com, "MP-F30, User's Guide," pp. 2-47.

Von Herbert Pauler, Funkschau, "Kopierschutz fur MP3-Audio," 1999, 9 pages total.
English Summary, "A device for remotely controlling a car device for playing mp3 files is disclosed . . . ", 1 page.
Franklin N. Tessler, Macworld, "Mobile MAC, Highway Fidelity," Jun. 2004, pp. 1-3.
Barry Collins, The Sunday Times, "High-class high-tech—Buyer's guide," 2001, 2 pages total.
Peter Familari, Herald-Sun, "Clever Deck-CD and mini-disc combination," 1998, 1 page.
JVC, "MD-CD Combination Deck, XU-301BK, Instructions," pp. 1-59.
Amy Gilroy, Mobile Electronics, "OEM Integrators Embrace iPod's Success," 1 page.
JVC, "Portable Minidisc Recorder, XM-R700SL, Instructions," pp. 1-24.
Rio Car, "Car Toy Sole Retailer for Rio Car," May 28, 2001, 1 page.
Amy Gilroy, Twice, "Panasonic Ships First SD MP3," Dec. 4, 2000, 1 page.
Twice, "PhatNoise Readies MP3," Nov. 5, 2001, 1 page.
George Cole, Financial Times, "Listen with your eyes: A new music CD format supplies textual information," Oct. 23, 1997, pp. 1-2.
Dana J. Parker, Standard Deviations, "CD-TEXTra! Read all about it!", Oct. 1996, pp. 1-2.
Mobile Electronics, "Down the Road," Jul. 2004, pp. 1-2.
Alpine, "Interface Adapter for iPod KCA-420i—Owner's Manual," 44 pages total.
PR Newswire, "Alpine Announces Fall Release of Interface Adapter That Enables iPod Control and Playback From In-Vehicle Sound Systems," Jul. 7, 2004, 2 pages total.
Amy Gilboy, Mobile Electronics, "Apple's iPod Seen Transforming Car Audio Business," 1 page.
Greg Borrowman, The Sydney Morning Herald, "Philips Releases Its Latest DVD," 1999, 2 pages total.
JVC, "Audio/Video Control Receiver, RX-668VBK, Instructions," pp. 1-43.
Sony webpages in Japanese, "Portable MD Recorder," Oct. 1997, 5 pages total.
Sony, "Walkman MZ-R50 Recorder," Oct. 1997 7 pages total.
Sony, "MD Walkman MZ-R55," Oct. 10, 1998, 6 pages total.
Daniel Kumin, Stereo Review, "Jukebox Heaven," Jan. 1999, pp. 64-71.
Audio, "Anthem Five-Channel Amp," Jul./Aug. 1999, p. 15.
Sony webpages in Japanese, "Portable Mini Disc Player MD Recorder," Jul. 21, 1996, pp. 1-5.
Sony, "MD Walkman Operating Instructions—MZ-R4ST," 1996, pp. 1-64.
Sony, "MD Walkman Operating Instructions—MZ-R5ST," 1997, pp. 1-79.
Stereo Review, "New Products," Jun. 1998, 1 page.
Factiva, Hardware Review, "Lost in the Supermarket," 2009, pp. 1-3.
Sony webpages in Japanese, "Portable Mini Disc Player MD Recorder," Oct. 21, 1999, pp. 1-63.
Jamie Sorcher, Stereo Review, "New for the Road," May 1998, 2 pages.
Sony, "MD Walkman Operating Instructions—MZ-R55," 1998, pp. 1-42.
John Whitters, The Advertiser, "Is the cassette doomed?" Jul. 16, 1998, pp. 1-2.
U.S. Patent and Trademark Office, Inter Partes Reexamination Examiners Answer mailed May 14, 2013 in U.S. reexamination No. 95/001,266.
U.S. Patent and Trademark Office, Office Action in Inter Partes Reexamination mailed May 17, 2013 in U.S. reexamination No. 95/001,262 (and merged application No. 90/011,254).

* cited by examiner

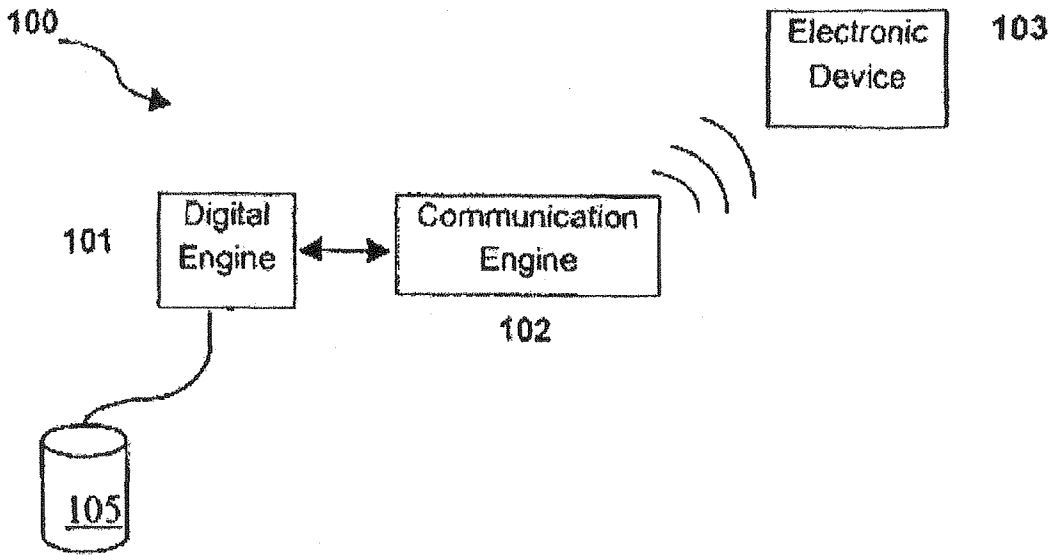
100
Electronic Device
103
101
Digital Engine
Communication Engine
102
105

FIG. 1

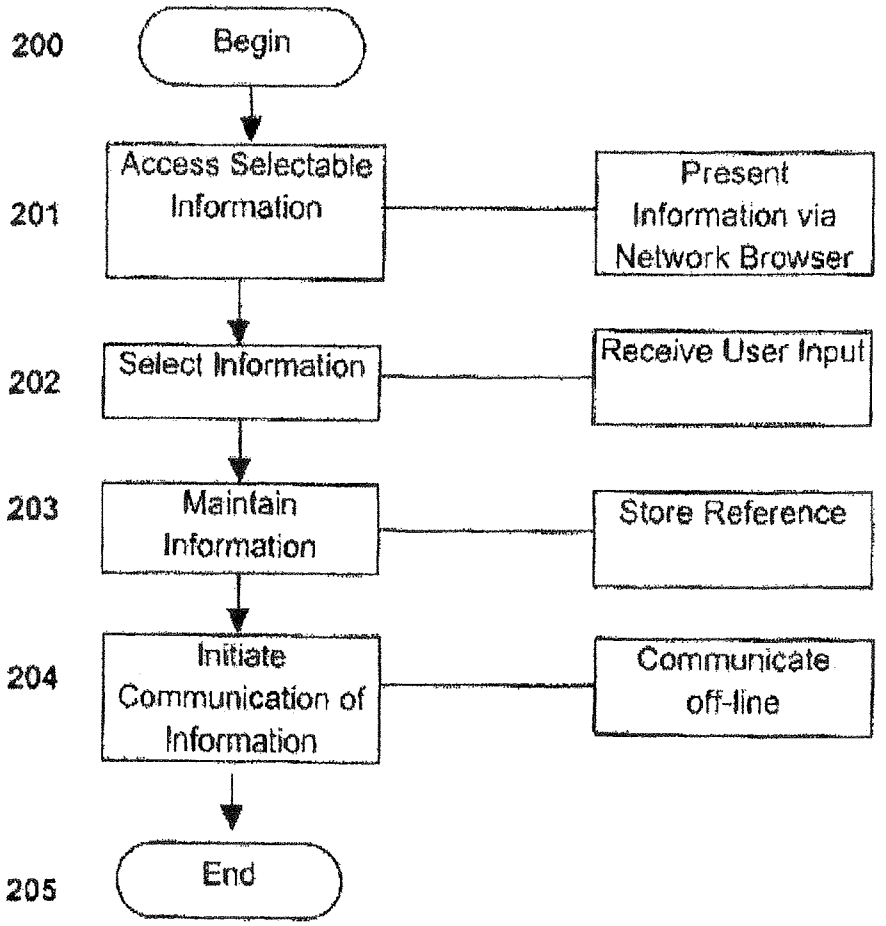
200
Begin
201
Access Selectable Information
Present Information via Network Browser
202
Select Information
Receive User Input
203
Maintain Information
Store Reference
204
Initiate Communication of Information
Communicate off-line
205
End

FIG. 2

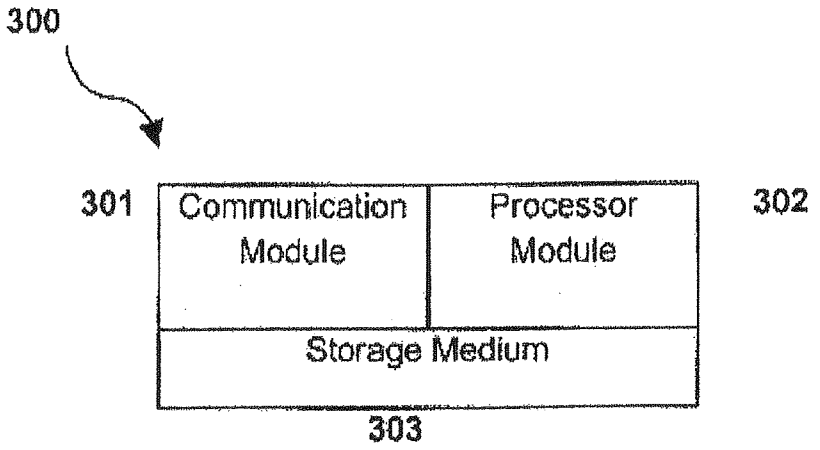
300
301
Communication Module
Processor Module
302
Storage Medium
303

FIG. 3

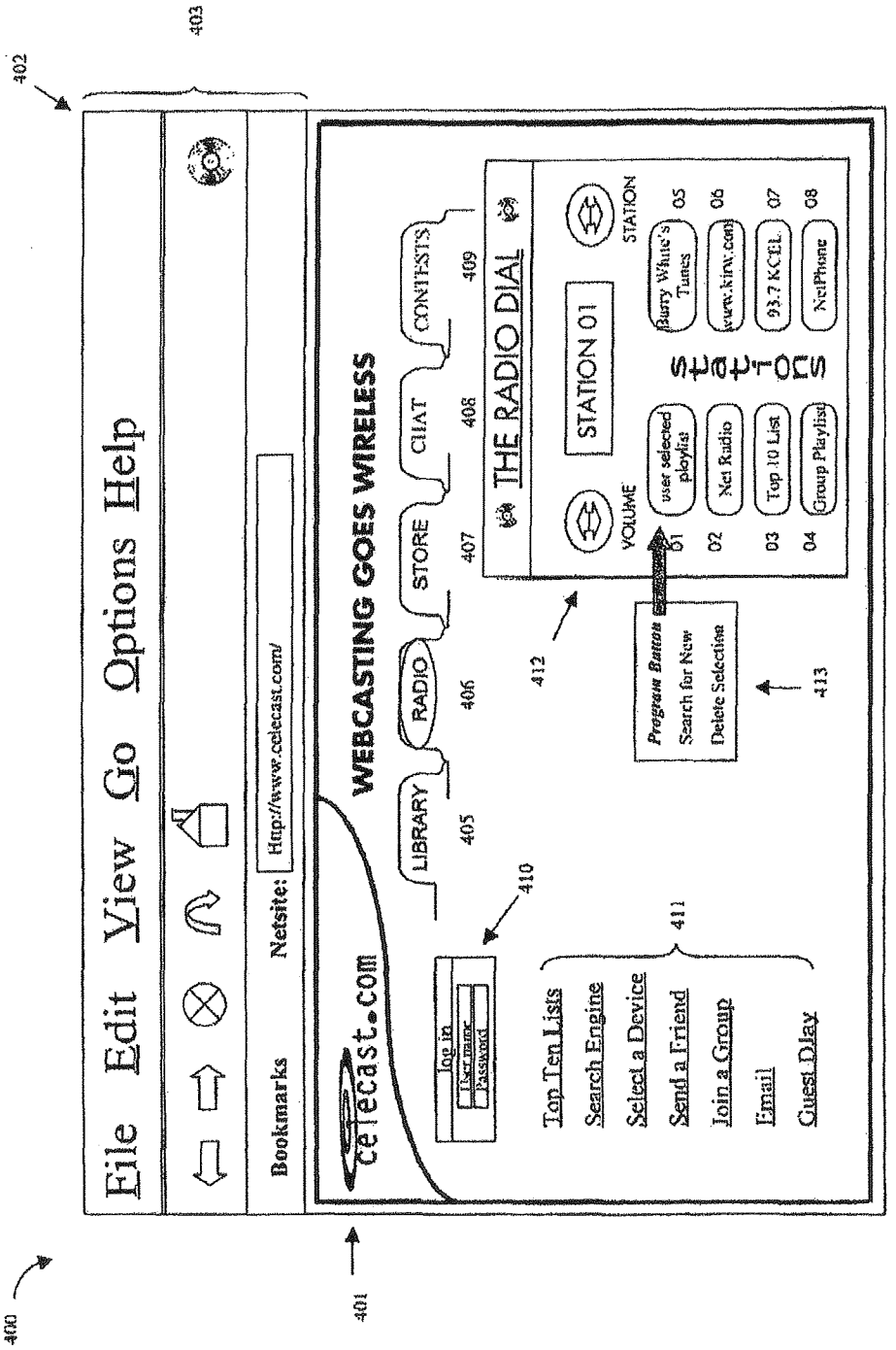
400
401
402
403
File Edit View Go Options Help
Bookmarks
Netsite: Http://www.celecast.com/
celecast.com
WEBCASTING GOES WIRELESS
LIBRARY
RADIO
STORE
CHAT
CONTESTS
405
406
407
408
409
410
411
412
413
Log in
User name
Password
Top Ten Lists
Search Engine
Select a Device
Send a Friend
Join a Group
Email
Guest Play
THE RADIO DIAL
STATION 01
VOLUME
STATION
STATIONS
01 user selected playlist
02 Net Radio
03 Top 10 List
04 Group Playlist
05 Barry White's Tunes
06 www.kinx.com
07 93.7 KCEL
08 NetPhone
Program Buttons
Search for New
Delete Selection

FIG. 4

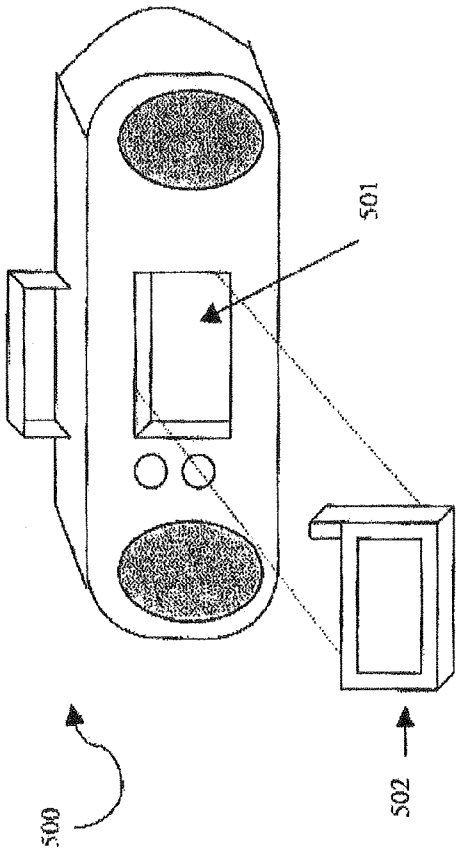

FIG. 5A

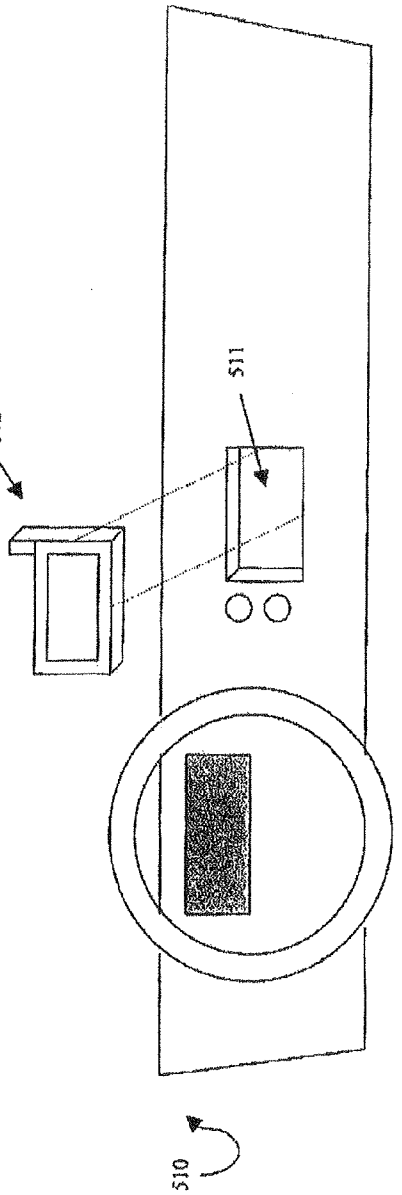

FIG.5B

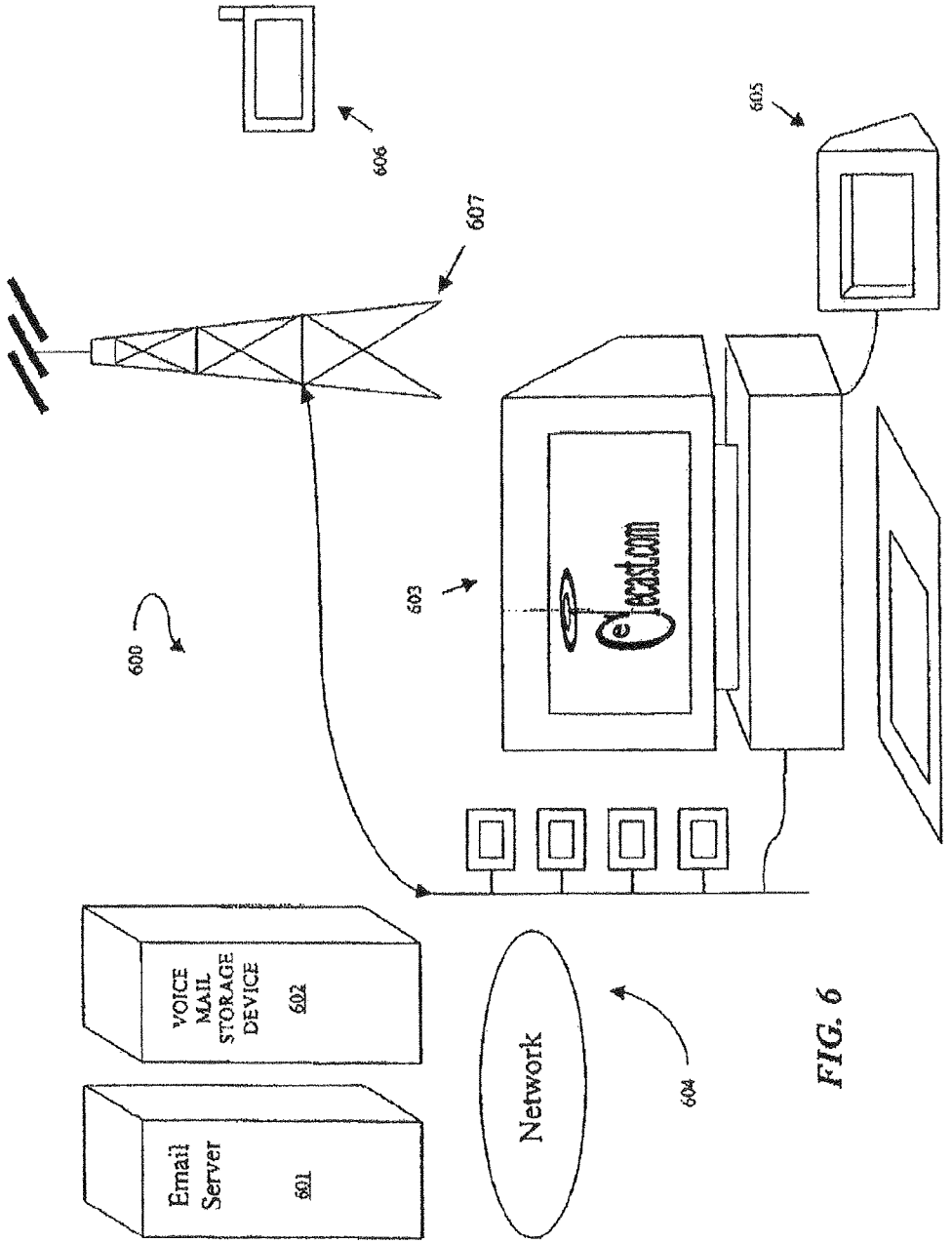
600
606
607
605
603
Email Server
601
VOICE MAIL STORAGE DEVICE
602
Network
604

FIG. 6

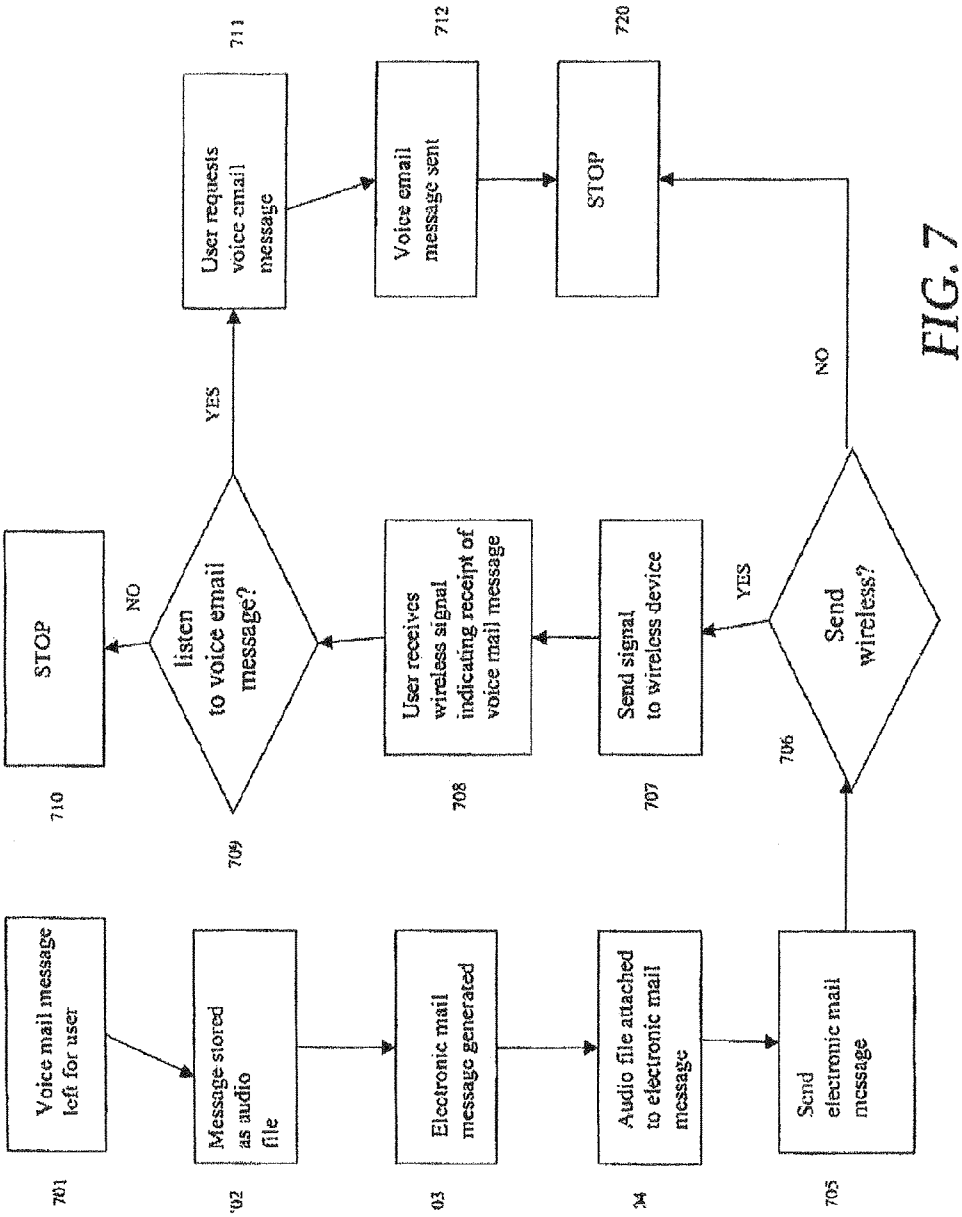
Voice mail message left for user
701
Message stored as audio file
702
Electronic mail message generated
703
Audio file attached to electronic mail message
704
Send electronic mail message
705
Send wireless?
706
YES
NO
Send signal to wireless device
707
User receives wireless signal indicating receipt of voice mail message
708
listen to voice email message?
709
NO
STOP
710
YES
User requests voice email message
711
Voice email message sent
712
STOP
720

FIG. 7

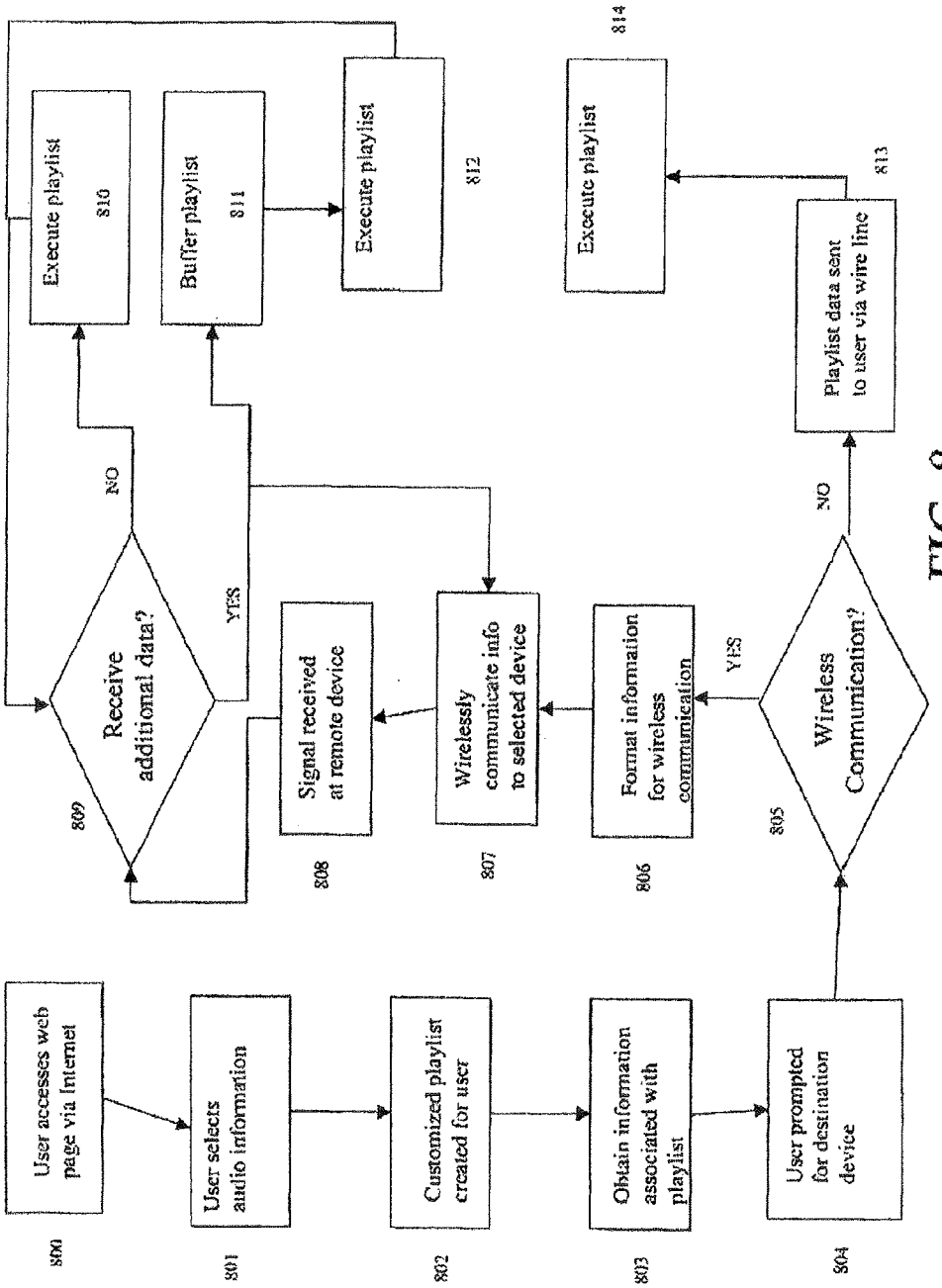
800
User accesses web page via Internet
801
User selects audio information
802
Customized playlist created for user
803
Obtain information associated with playlist
804
User prompted for destination device
805
Wireless Communication?
YES
NO
806
Format information for wireless communication
807
Wirelessly communicate info to selected device
808
Signal received at remote device
809
Receive additional data?
YES
NO
810
Execute playlist
811
Buffer playlist
812
Execute playlist
813
Playlist data sent to user via wire line
814
Execute playlist

FIG. 8

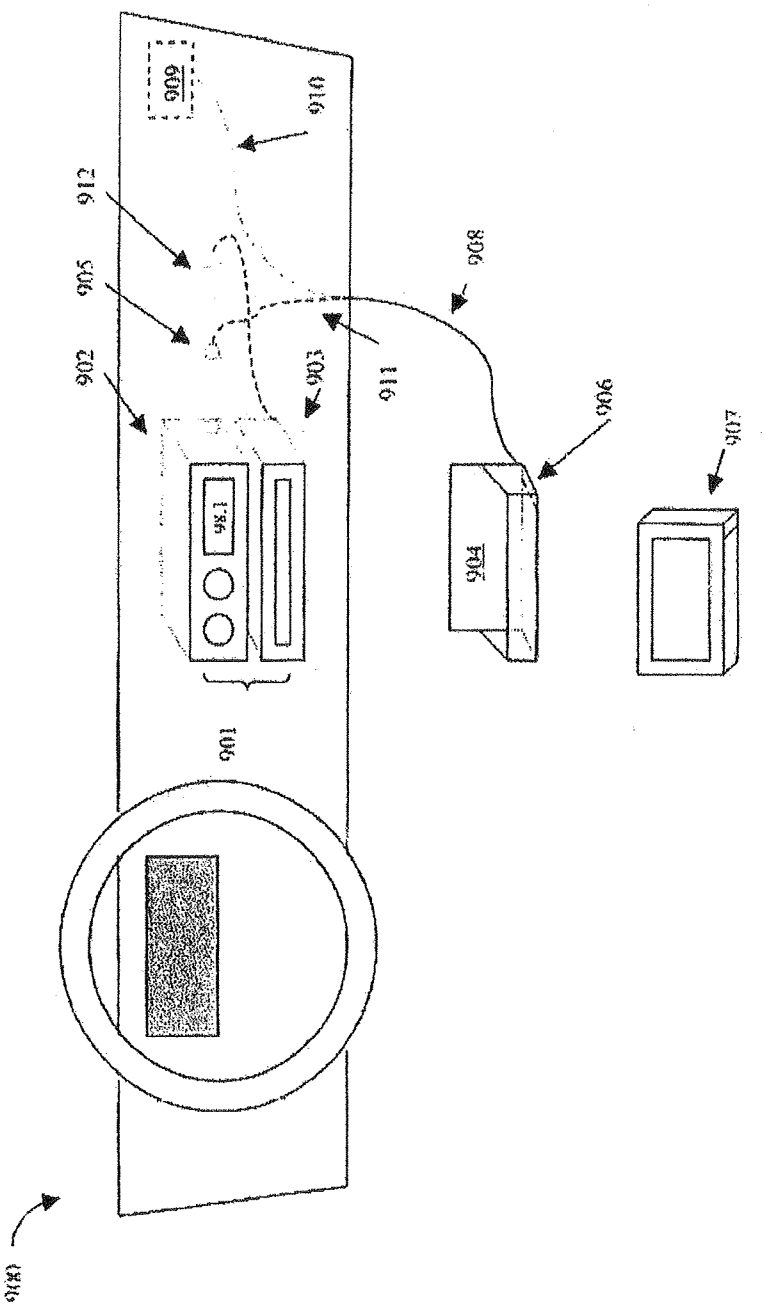

FIG. 9

SYSTEM AND METHOD FOR MANAGING MEDIA

This application is a continuation of U.S. patent application Ser. No. 13/117,507, filed May 27, 2011, which is a continuation of U.S. patent application Ser. No. 12/495,190, filed on Jun. 30, 2009, which is now U.S. Pat. No. 7,953,390, which is a continuation of U.S. patent application Ser. No. 12/015,320, filed Jan. 16, 2008, which is now U.S. Pat. No. 7,778,595, which issued on Aug. 17, 2010, which is a continuation of U.S. patent application Ser. No. 10/947,755, filed on Sep. 23, 2004, which is now U.S. Pat. No. 7,324,833, which issued on Jan. 29, 2008, which is a continuation of U.S. patent application Ser. No. 09/537,812, filed on Mar. 28, 2000, which is now U.S. Pat. No. 7,187,947, which issued on Mar. 6, 2007, the disclosures of which are all hereby incorporated herein by reference in their entirety for all purposes.

FIELD OF THE DISCLOSURE

The present disclosure relates to digitally stored content and, more specifically, to a content delivery system and method.

BACKGROUND

The first commercial radio stations in the United States began operation around 1920. Today, there may be as many as 12,000 radio stations in the United States programming in several distinct formats. When broadcasting their respective signals, these radio stations often use an analog signal, which may be modulated based on frequency or amplitude. Frequency modulated (FM) radio appears to be the dominant entertainment medium while amplitude modulated (AM) radio seems to be a popular outlet for news and information.

Unfortunately, analog radio may be unable to provide the sound quality and consistency that radio listeners desire. As such, several broadcasting related companies have begun to consider a movement to digital radio. Unlike analog radio reception, digital radio reception may be able to provide compact disk (CD) quality sound while remaining virtually immune to interference. Being immune to interference may result in reducing static growls or "multipath" echoes, echoes caused by signal reflections off buildings or topographical features.

Some countries, like Canada and many European countries, may choose to have digital radio operate in a single digital radio band such as the L-band between 1452-1492 megahertz (MHz). This band would allow the reception of both terrestrially and satellite-originated signals. By comparison, FM radio typically operates between 88 and 108 MHz while AM radio typically operates between 0.525 and 1.705 MHz. Neither of these bands allows for easy transmission via satellite.

Canada proposed using the L-Band for digital radio as early as 1992. Several countries throughout the world have since agreed to use the L-Band for digital radio with one notable exception. It appears the United States has chosen not to operate its digital radio within the L-Band. In the United States, the L-Band may already be committed for military uses. Apparently, the United States plans to adopt a system called in-band on-channel, or IBOC, which fits within the AM and FM frequencies.

IBOC technology may offer some advantages over L-Band transmissions. For example, there may be no need for new spectrum allocations. There may be backward and forward compatibility with existing AM and FM systems on both the

transmitter and receiver sides, and there may be a low-investment upgrade to digital systems. Unfortunately, a workable IBOC solution is yet to be seen though technology may someday make IBOC digital radio commercially possible.

Even if an IBOC solution becomes commercially available in the United States, IBOC digital radio may suffer from several shortcomings. For example, there may global standardization problems. Though the United States favors IBOC, the European and Canadian communities seem to favor L-Band making the establishment of a global standard difficult.

SUMMARY

In accordance with teachings of the present disclosure, a system and method for communicating selected information to an electronic device are disclosed that provide significant advantages over prior developed systems. The disclosed embodiments allow a radio listener to create a personal playlist and to listen to this playlist in a wireless atmosphere while enjoying CD quality sound.

According to one aspect of the present disclosure, a system incorporating teachings of the present invention may include a digital engine operable to maintain data representing the selected information in a digital format. In some embodiments, the digital engine may be communicatively coupled to a graphical user interface that allows a user to identify the selected information. The system may also include a communication engine communicatively coupled to the digital engine, the communication engine may be operable to wirelessly communicate the data representing the selected information to an electronic device.

The wireless communication may involve communicating via a cellular communications network. The cellular communications network may be, for example, the global system for mobile communications network (GSM), which may operate around 1.8 GHz or 1.9 GHz. The cellular communications network may also involve, for example, the code-division multiple access network (CDMA). In some embodiments, the wireless communication may involve communicating via a high-speed, low-power microwave wireless link. For example, the wireless link may include a Bluetooth link, which may operate around 2.4 GHz.

According to another aspect of the present invention, a system for communicating selected information to an electronic device is disclosed. The system includes a digital engine operable to maintain data associated with selected audio information and a communication engine communicatively coupled to the digital engine, the communication engine operable to initiate wireless communication of the data to the electronic device.

According to another aspect of the present invention, a method for communicating selected audio information to an electronic device is provided. The method includes maintaining data associated with the selected audio information using a digital engine, and initiating wireless communication of the data to the electronic device.

According to another aspect of the present invention, an electronic device for receiving selected audio information via wireless communication is provided. The device includes a communication module operable to receive wireless communication of the selected audio information, a storage medium operably coupled to the communication module, the storage medium operable to store the selected audio information, and a processor module coupled to the communication module, the processor module operable to process the received selected audio information.

According to another aspect of the present invention, a method for communicating selected audio information to an electronic device is provided. The method includes presenting information associated with audio information within an interface associated with a communication network, receiving an input from a user identifying the selected information, maintaining data associated with the selected audio information using digital engine, and initiating wireless communication of the data to the electronic device.

According to a particularized aspect of the present invention the interface operates in a browsing environment and the wireless communication operates outside the browsing environment.

Other technical advantages will be apparent to those of ordinary skill in the art in view of the following specification, claims, and drawings.

BRIEF DESCRIPTION OF THE DRAWINGS

A more complete understanding of the present embodiments and advantages thereof may be acquired by referring to the following description taken in conjunction with the accompanying drawings, in which like reference numbers indicate like features, and wherein:

FIG. **1** depicts a general system for wirelessly communicating selective information to an electronic device in accordance with one aspect of the present invention;

FIG. **2** illustrates a block diagram of a method of wirelessly communicating selected information to an electronic device;

FIG. **3** illustrates an electronic device operable to receive selected audio information in accordance with the teachings of the present invention;

FIG. **4** illustrates a graphical user interface (GUI) for displaying selectable audio information according to one aspect of the present invention;

FIG. **5**A illustrates a portable radio system having a mount for an electronic device according to one embodiment of the present invention;

FIG. **5**B illustrates an automobile console having a mount for coupling an electronic device according to one aspect of the present invention;

FIG. **6** illustrates a block diagram of a system for communicating voice mail messages using email according to one embodiment of the present invention;

FIG. **7** illustrates a flow chart for providing voice email messages according to one embodiment of the present invention;

FIG. **8** illustrates a flow diagram of a method for providing selected audio information to an electronic device according to one embodiment of the present invention; and

FIG. **9** illustrates an automobile console having a mount for an electronic device according to one embodiment of the present invention.

DETAILED DESCRIPTION

The conceptual groundwork for the present invention includes wirelessly communicating selective information to an electronic device. According to one aspect, a user may interact with the Internet to select information, such as audio information, and wirelessly communicate the selected information to an electronic device. The electronic device receives the information via a wireless communications network and processes the information accordingly. In a particularized form, a user may select information from an Internet website operable to allow selectivity of audio information such as songs, on-line radio stations, on-line broadcasts, streaming audio, or other selectable information. Upon selecting the audio information, information or data associated with the selected audio information is wirelessly communicated to an electronic device. The electronic device may then be used to process the selected audio information. In this manner, a user may receive selective audio information via a wireless electronic device.

In one form, the electronic device may be operable to communicate with an individual's automobile audio system. A user may select audio information utilizing a personal computer with access to a website operable to display selectable audio information. The selected audio information may then be wirelessly communicated to the electronic device associated with an automobile's audio system. Therefore, upon receiving the selected audio information, a user may access and play the received audio information utilizing the electronic device in association with the automobile's audio system.

The present invention is not limited to communicating only audio information. One skilled in the art can appreciate that other types of information, such as video, textual, etc. may be communicated utilizing the systems and methods disclosed herein without departing from the spirit and scope of the present invention. Additionally, it will be understood that information may be formatted in a plurality of ways at different phases of communication without loosing the underlying content of the selected information. For example, an audio file may be formatted, segmented, compressed, modified, etc. for the purpose of providing or communicating the audio invention. Therefore, the term "audio information" or "information" is used in a general sense to relate to audio information in all phases of communication.

FIG. **1** depicts a general system for wirelessly communicating selective information to an electronic device in accordance with one aspect of the present invention. The system, illustrated generally at **100**, includes a digital engine **101** coupled to a communications engine **102**. Communications engine **102** is remotely coupled to an electronic device **103**. Digital engine **101** may be directly or indirectly coupled to storage device **105** operable to store information. Digital engine **101** maintains information or data associated with selected information in a digital format. The information may be stored within storage device **105** or other storage devices operable to maintain data or information associated with the selected information.

Communications engine **102** is communicatively coupled to digital engine **101** and operable to wirelessly communicate the selected information to electronic device **103**. During operation, audio information may be selected by a user utilizing a personal computer or other devices operable to communicate with an information network. Digital engine **101** is operable to maintain information associated with the selected audio information. For example, the information could be several songs or titles configured as an audio file and formatted in a digital format such as an MP3 file, wave file, etc. The maintained information may also be a reference to a network location where an audio file may be stored, a network location where a network broadcast of audio information may be located, etc. or other network locations having information associated with the selected audio information. Therefore, digital engine **101** may maintain a plurality of different types of information or data associated with the selected audio information.

System **100**, utilizing communication engine **102**, may wirelessly communicate data or information associated with the selected audio information to electronic device **103** thereby providing wireless communication of selected infor-

mation to an electronic device operable to receive wireless communications. In one embodiment, digital engine **101** may be used in association with an Internet website configured to provide access to selectable information. The Internet website operably associated with digital engine **101** allows a user to select information to be wirelessly communicated to electronic device **101** utilizing a network environment. The Internet website may include several different types of information related to audio information.

FIG. **4**, described in greater detail below, illustrates one embodiment of providing an Internet website for displaying selectable audio information. For example, the Internet website may include music and/or artist search engines, playlists, top 10 charts, artists by genre, and other information associated with audio information. A user may select information associated with the audio information and digital engine **101** can maintain the information or data associated with the selected information in a digital format. Communications engine **102** coupled to digital engine **101** may wirelessly communicate data associated with the selected audio information to electronic device **103**. Therefore, a user may access and select audio information via an Internet website and wirelessly communicate the data to an electronic device. As such, system **100** advantageously allows for wireless communication of selected audio information to electronic devices that may be remotely located from a conventional terrestrial communication network.

Electronic device **105** may be configured in a plurality of ways for receiving wireless communication of selected audio information. In one embodiment, electronic device **105** may be operable as a component configured to receive a cellular signal comprising the selected information communicated by the communication engine. For example, a device having a cellular modem may be operable to receive the information at specified intervals. Upon receiving the information the electronic device may process the received information. Electronic devices are described in more detail below and may include a network radio, a modular device, an audio system, a personal digital assistant (PDA), a cellular phone, or other electronic devices operable to receive information wirelessly communicated by communication engine **102**.

Communications engine **102** may be operable to wirelessly communicate selected information to electronic device **103** in a plurality of ways. The present invention advantageously allows for several different embodiments of wirelessly communicating selected audio information to electronic device **103** and is not limited to any specific configuration described below. Several different types or combinations of wireless communication may be realized by the present invention. Communications engine **102** may be operable to wirelessly communicate the selected information from an information network, such as the Internet, to an electronic device operable to receive wireless communications. In one embodiment, communications engine **102** may comprise a conduit to interface information with a wireless communication network. The conduit may configure the information located within the information network into a format operable to be transmitted via wireless communication.

For example, a wireless device may be operable to receive packets of information having a specific size and in a specific format. In such an embodiment, communications engine **102** could format the information into a desirable format for wirelessly communicating the information to electronic device **103**. Several types of wireless communication may be used by communications engine **102** to communicate the selected information to an electronic device. Communications networks such as GSM, Digital Satellite communication, SB, Radio bands, DRC, SuperDRC or other systems or types of transmission such as TDMA, CDMA, spread spectrum, etc. or frequencies such as between about 1.7 GHz and 2.0 GHz may be realized by the present invention for communicating information or data representing the selected audio information to electronic device **103**.

In one embodiment, the selective information may be communicated using a digital broadcast signal. Digital broadcast includes providing information via a signal such as AM, FM, and the like. Digital information may be included or encoded as a sub-carrier within the broadcast signal and received by electronic device **103**. A digital sub-carrier may include a selective bandwidth of frequencies for a specific radio station (i.e., 6 MHz for FM). The selective information may be wirelessly communicated to electronic device **103** utilizing a communication engine **102** operable to communicate the selective information via a digital FM signal. In this manner, selective information may be communicated within digital FM sub-carriers to an electronic device operable to receive the information. For example, a user may subscribe to communicate the information via an FM sub-carrier and receive the selective data through wireless communication via a specified FM sub-carrier.

In one embodiment, the selected information may be formatted and transmitted to achieve a desirable transmission rate. For example, conventional systems may transmit information at a speed of 10 kilobits per second. Therefore, for 1 megabyte of information to be communicated to an electronic device, a transmission time of approximately 800 seconds may be required. The present invention may allow for a relative increase in transmission speed by removing the requirement that information be communicated asynchronously to an electronic device. For example, conventional wireless communication utilizes a specified frequency to communicate information in two directions (i.e., cellular phones). As such, information is communicated across a channel in an asynchronous manner to provide a continuous audio signal to the recipient.

The present invention advantageously allows for signals to be transmitted to an electronic device in a less than asynchronous manner. For example, if a user selected a song to be wirelessly communicated to an electronic device, system **100** could communicate the information in a less than asynchronous manner allowing the selected information to be transmitted efficiently thereby decreasing the overall download time for the selected audio information. In one embodiment, the selected information may be compressed and transmitted across the same frequency but at different phases thereby allowing plural signals having different phases to be wirelessly communicated to an electronic device. Therefore, the electronic device may be operable to receive multiple phased signals and process the selective information accordingly.

In one embodiment, the information may be wirelessly communicated at a relatively slow transmission rate. For example, a user may schedule when the selected audio information may be used by electronic device **103**. The user may select several different audio tracks or songs to be transmitted to an electronic device associated with the user's vehicle such that the user can listen to the user selected audio information during the drive home at the end of a workday. Therefore, it may be desirable to utilize a slower transfer speed due to the extended amount of time available prior to actual use of the selected audio information. In this manner, communications networks having less or slower transfer rates may be used to wirelessly communicate the selected audio information to the electronic device.

In another embodiment, high-speed wireless communication networks may be used to communicate the selected audio information. For example, a user may want to listen to an Internet broadcast of an Internet radio station. Therefore, high-speed communication may be required to wirelessly communicate or stream the selected audio information to an electronic device. In another embodiment, a hybrid of wireless communication rates may be deployed depending on the requirements of the selected audio information and/or the electronic device. For example, the selected audio information may first be transmitted to the electronic device via high-speed communication until enough information has been wirelessly communicated and buffered into a memory device operably associated with the electronic device. Upon communication of a certain percentage of the selected audio information, slower communication speeds may then be used to communicate additional selected audio information.

Therefore, system **100** may be configured in a plurality of ways to communicate selected information to electronic device **103**. Digital engine **101** may be used to maintain data or information associated with the selected information and communication engine **102**, communicatively coupled to digital engine **101**, may wirelessly communicate selected information to electronic device **103**.

FIG. **2** illustrates a block diagram of a method of wirelessly communicating selected information to an electronic device. The method may be used in association with the system illustrated in FIG. **1** or other systems operable to utilize the method of FIG. **2**.

The method begins generally at step **200**. At step **201**, selectable audio information may be accessed utilizing a network communications device. For example, selectable audio information may be displayed at an Internet website accessible by a personal computer. In another embodiment, the selectable information may be accessed utilizing a wireless communications device such as, a cellular phone, a PDA device, or other devices operable to provide access to the selectable audio information.

Upon accessing the selectable information, the method proceeds to step **202** where a user can identify or select audio information to be wirelessly communicated to an electronic device. For example, a user may select an entire album to be wirelessly communicated to a PDA device.

Upon the user selecting the audio information, the method proceeds to step **203** where the method maintains information associated with the selected information. In one embodiment, the information may be an audio file, such as a wave file, and MP3 file, etc. representative of the selected audio information. In another embodiment, a network location that comprises a file representing the selected information may be maintained. Another example may include a network location of a network broadcast of audio information. Therefore, the method at step **203** may maintain several different types of information associated with the selected audio information.

Upon maintaining information or data associated with the selected information, the method proceeds to step **204** where the method wirelessly communicates information associated with the selected information to an electronic device. For example, if an audio file associated with the selected audio information was maintained, the method would communicate the audio file to the electronic device. In another embodiment, a link or network address broadcasting the selected audio information may be accessed and, at step **204**, wirelessly communicated to an electronic device. In another embodiment, a combination of different types of audio information may be wirelessly communicated to an electronic device. Upon transmitting the selected audio information, the method proceeds to step **205** where the method ends.

Selected audio information may be communicated in a plurality of ways as described above including communicating via a cellular communications network to an electronic device operable to receive cellularly-communicated signals. For example, the information may be selected from a website operable to display selectable information. Upon selecting the audio information, a data file representing the selected audio information may be wirelessly communicated to an electronic device thereby allowing a user to select audio information via the Internet and wirelessly communicate the information to an electronic device.

In some embodiments, the wireless communication to an electronic device may occur in an off-line environment. For example, a user may go "on-line" to access a website and select information and then go "off-line" or end the browsing session. The wireless communication may then occur while the user is off-line thereby removing the confines of using an active or on-line browsing environment (i.e. Internet radio broadcast, streaming audio, etc.) for accessing selected information. Therefore, the method of FIG. **2** allows for information, such as audio information, to be communicated from a network location such as a web site, to an electronic device "via" wireless communication. The present invention advantageously allows users to access and download information accessible by a network location to an electronic device operable to receive wireless communications thereby reducing the need for land lines, terrestrial communication networks, etc. for communicating selective information.

In one embodiment, the method of FIG. **2** may be deployed in association with an Internet website operable to display selectable links for downloading information. The information may include audio information such as MP3s, streaming audio, streaming. Internet broadcasts, etc. are selectable by a user and operable to be wirelessly communicated to an electronic device. By providing a user with a website of selectable audio information operable to be wireless communicated to an electronic device, a user may customize information communicated to an electronic device. In one embodiment, a user may communicate information to an electronic device that may not be owned by the user. For example the method of FIG. **2** could be modified to allow a user to wirelessly communicate audio information to a plurality of electronic devices that may or may not be owned by the user.

FIG. **3** illustrates an electronic device operable to receive selected audio information in accordance with the teachings of the present invention. Electronic device **300** includes a communication module **301** such as a transceiver coupled to storage medium **303** such as a high speed buffer, programmable memory, or other devices operable to store information. Electronic device **300** may also include processor **302** operably associated with communication module **301** and storage medium **303**. Processor **302** may be operable to process wirelessly communicated selected information and in one embodiment may be integrated as part of communication module **301** of storage medium **303**. In the same manner, as larger scale integration of electronic devices proliferate, communication module **301**, processor **302**, and storage medium **303** may be integrated into one communication component or device operable as electronic device **300**.

Processor **302** may be operable using software that may be stored within storage medium **303**. In one embodiment, software upgrades may be communicated to electronic device **300** via wireless communication allowing for efficient system upgrades for electronic device **300**. Storage medium **303** may include one or several different types of storage devices. For

example, storage medium **303** may include programmable gate arrays, ROM devices, RAM devices, EEPROMs, minidisks or other memory devices operable to store information.

During use, electronic device **300** receives wireless communications of selective information. The information may be transmitted via a wireless communications network and received by electronic device **300** via transceiver **301**. Transceiver **301** may be operable to convert the received wireless communication signal into a desirable format and store the received information within storage medium **303**. The received information may then be processed by electronic device **300**.

In one embodiment, electronic device **300** may be operable as an audio player configured to play digital representations of music. For example, electronic device **300** may also include an MP3 player operable to process the received information into an audio signal. Therefore, electronic device **300** may be used to receive wirelessly communicated MP3 audio files and play these files using an MP3 player when desired. In another embodiment, electronic device **300** may be configured as a PDA wherein the PDA includes a web browser operable to wirelessly communicate with the Internet. The PDA device may include a user interface allowing a user to select information to be wirelessly communicated to electronic device **300**.

By providing a website of selectable information, the PDA devices may provide an efficient embodiment for electronic device **300** in that is allows a user to access and select information using a wireless communication network and receive the selected information using the same or different wireless communication network. In yet another embodiment, electronic device **300** may be configured as a component operable to receive selective information via wireless communication and communicate the information to a second electronic device such as an automobile sound system, home stereo, etc.

For example, electronic device **300** may utilize transceiver **301** to receive wirelessly communicated information. Electronic device **300** may then be coupled to an automobile sound system using an interface and communicate the received information to the automobile sound system. In this manner, electronic device **300** may be used to provide the automobile sound system with audio files received via wireless communication.

In another embodiment, electronic device **300** may be operable to communicate the received audio information to an audio system via a localized communications-signaling network. One such network may include utilizing "Bluetooth" communication standard, used to provide communication between electronic devices in a proximal setting. In one embodiment, electronic device **300** may be integrated into an audio component such as a radio receiver. Electronic device **300** integrated into an audio component may be configured to process digital audio files wirelessly communicated to an audio component. In another embodiment, electronic device **300** may be operable to communicate with an analog receiver at a predetermined frequency.

For example, a specific frequency may be selected (i.e., 93.7 MHz) for communicating the wireless received selected information from electronic device **300** to a localized audio system. Electronic device **300** communication of the wirelessly received information allows a conventional receiver to receive the selected audio information. In one embodiment, the conventional receiver may be configured to receive a digital sub-carrier, on-carrier, or other within a specified frequency. Therefore, electronic device **300** may be operable to locally transmit the signal at a specific frequency thereby allowing the conventional receiver to receive the information.

In another embodiment, electronic device **300** may be operable to scan plural bandwidths to receive the selective information. For example, transceiver **301** may be operable to receive selective information across several frequencies and process the received information accordingly.

In another embodiment, electronic device **300** may be operable to scan several frequencies to obtain the desirable information. For example, a user may select several Internet broadcasts comprised of streaming audio information. Therefore, the information may be transmitted across several wireless frequencies receivable by electronic device **300**. Electronic device **300** may then be operable to allow a user to scan wirelessly communicated Internet broadcast signals thereby providing a user selected virtual broadcast radio network. In another embodiment, electronic device **300** may include a user interface operable to communicate with an Internet website operable to display selectable audio information. The Internet website may be configured as a user-preferred environment displaying a users selected audio information. Internet broadcast selections, streaming audio selections, etc.

With a display device for displaying a Website having selectable information, electronic device **300** may allow a user to select audio information via a user interface and receive the selected information via wireless communication thereby providing a customizable WebRadio device for the user. In another embodiment, electronic device **300** may be a modular device configured to be coupled to, for example, a portion of a cars interior. For example, electronic device **300** may be mounted to a portion of a car's console thereby providing a removably coupled electronic device operable to wirelessly receive selected audio information. As a removable device, electronic device **300** may also be coupled to a home audio system, a portable radio system or other systems thereby providing a versatile electronic device operable to receive wirelessly communicated selected audio information.

In another embodiment, electronic device **300** may be operable as a PDA and/or a cellular phone that may be mounted to an automobile's console. Electronic device **300** may then integrate with a user's automobile to provide an all-encompassing communications device. For example, electronic device **300** configured as a PDA and cellular phone may allow for communication with a user's email account, voice mail account, the Internet, as well as allowing for the receipt of selected audio information via wireless communication. Electronic device **300** may be operable in a hands-free mode allowing a user to maintain safe driving fundamentals. During use, electronic device **300** may be processing selective audio information for communicating with an automobile audio system and may further be operating to receive incoming cellular calls.

Electronic device **300** may be set-up by the user to pause the music being played and allow the received cellular call to be communicated either via an independent speaker or utilizing the automobiles "audio system." Additionally, electronic device **300** may be operable to adjust the listening level of an automobile's audio system, it may play received voice mail messages, allow a user to view the Internet, etc. In one embodiment, electronic device **300** may be operable as a dual mode electronic device capable of receiving both digital and analog wireless communication signals. In this manner, electronic devices may efficiently utilize available bandwidth for receiving selected information from a communications engine. For example, transceiver **301** may be a wireless communications modem operable to receive digital or analog signals.

FIG. **4** illustrates a graphical user interface (GUI) for displaying selectable audio information according to one aspect

of the present invention. The GUI may be operable with a computer system, cellular device, PDA, or other electronic devices or systems operable to display the GUI of FIG. **4**. The GUI, shown generally at **400**, may be displayed using a conventional web browser **402** such as Microsoft®. Internet Explorer, a WAP browser, or other browsers operable to display the audio information. Browser **402** includes browser functions, shown collectively at **403**, for navigating a network such as the Internet or an intranet. Homepage **401** may be displayed using browser **402** and may include several functions, features, information, etc. related to audio information. Home page **401** may be developed using several different types of programming (i.e., HTML, XML, Java, etc.) used to developing a network location or website.

The present invention is not limited to any one specific type of software and may be realized in plurality of ways as can be appreciated by those skilled in the art. Homepage **401** may also include login region **410** allowing a user to log into homepage **401** and display a user-preferred environment. For example, a user may want Radio Dial **412** to appear when a user logs into homepage **401**. In another embodiment, a user may want to view a current playlist selected by the user or the status of wirelessly communicated playlist. A user may also provide demographic information allowing advertisers to access the demographic information and provide advertisements based upon the demographic information. For example, an advertiser may want to target Hispanic females in the 21-25 year old age group.

Through providing demographic information to advertisers, when a user logs into homepage **401** selective advertising can be "targeted" for a group of users. Homepage **401** may also include several tabs for efficiently navigating homepage **401**. Library tab **405** may be provided to allow a user to browse available audio information that may be presented by title, genre, artist, decade, culture, etc. Store tab **407** may also be provided for locating items available for purchase such as CDs, PDA devices, MP3 players, wireless communication hardware, interfaces, software or other types of products that may be purchased while on-line. Chat tab **408** may also be provided allowing a user to chat with other users of home page **401**. For example, a guest musical artist may be available to chat with visitors of home page **401** via a chat page associated with chat tab **408**. Home page **401** may also include contest tab **409** for displaying current contests, prizes, and/or winners.

Radio tab **406** may also be provided for displaying audio information. For example, radio tab **406** may display a collective menu **411** of selectable functions or features associated with audio information. Top ten lists may be provided to a user based on several different billboard polls or genres. A search engine may be provided allowing a user to search for a specific type of audio information such as an artist, song title, and genre. Internet radio station, etc. In one embodiment, a user may input the lyrics to a song within the search engine. As such, the search engine may locate several different songs having the desirable lyrics and allow a user to select the search results. A user may also use a select a device feature that allows a user to select a destination device for communicating selected audio information. For example, a user may want to communicate a playlist to several different devices such as a PDA, a home computer system, a work computer system, etc.

As such, a user can communicate selective information to several devices without having to download the information separately for each device. A send a friend link may also be provided allowing a user to send selective audio information to a friend's electronic device. A user may also join a group comprised of individuals that select a certain genre of music to be communicated to the user's electronic device. For example, a user may want to join a group that plays only 50s swing music. As such, the user could communicate the group's selected songs to the user's electronic device. A user may also utilize an email account provided by homepage **401** allowing a user to correspond with others via email. A user may also access a list of guest DJs that may provide playlists of songs chosen by the guest DJ and selectable by a user.

In one embodiment, a user's radio dial **412** may be provided when a registered user logs into homepage **401**. As such, radio dial **412** may include several functional buttons similar to conventional systems such as a volume control and a station control. However, radio dial **412** surpasses the limitations of conventional systems through providing a programmable radio dial of user customized audio information. Radio dial **412** includes several stations that may be programmed using program interface **413**. The preset stations may include several different types of user customized preset information such as user selected playlists, Internet broadcast stations, top lists, group playlists, artist-selected lists, on-line radio station, conventional radio stations. Internet phone, cellular phone, etc. and other functions, features, or information associated with audio information.

Radio dial **412** may also be displayed as a separate user interface and in some embodiments, does not require a "browsing" environment to view radio dial **412**. For example, an electronic device, such as a PDA, having a display may graphically present radio dial **412** to a user. One example may be using electronic device in association with an automobile audio system. Electronic device may display radio dial **412** and may allow a user to navigate, modify, select, adjust volume, access daytimer, access phone lists, etc. or perform other functions while the electronic device is used in association with an automobile sound system. Therefore, radio dial **412** may be operable as an application for use with several different types of electronic devices (i.e., computer systems, portable computing devices, cellular phones, etc.) operable to display radio dial **412** and in come embodiments may be wirelessly communicated to an electronic device.

In another embodiment, homepage **401** may allow a user to select when to download the information to an electronic device. For example, a user may want to listen to a certain genre of music at a specific time of day thereby allowing a user to select the information. As such, a user may select a different playlist for every day of the week thereby allowing a user to listen to different songs on different days of the week. The user can further identify when the selected playlist should be available for listening. For example, if a user wanted to listen to "playlist #1" on Monday morning during the drive into work between 8:00 am and 9:00 am, the user would enter the time and the day "playlist #1" would be available for listening. In this manner, the playlist may be communicated to the electronic device thereby allowing a user to listen to selective audio information at a desirable time.

FIG. **5**A illustrates a portable radio system having a mount for an electronic device according to one embodiment of the present invention. Portable radio **500** includes a mount **501** operable to receive electronic device **502**. Mount **501** may include a connector operable to provide communications and power to electronic device **502**. During use, electronic device **502** when mounted within portable radio **500** communicates with portable radio to provide remotely received selective audio information. In one embodiment, electronic device **502** may include a user interface allowing a user to access the Internet. Therefore, selective audio information located on

the Internet may be accessed by the user and remotely communicated to electronic device **502** coupled to portable radio **500**.

In another embodiment, portable radio **500** may include memory operably located within for storing downloaded information. For example, portable radio **500** may include 32 MB of RAM allowing electronic device **502** to receive selective information and download the selective information to memory located within portable radio **500**. In this manner, the downloaded music may be operable to be played within portable radio **500** while allowing electronic device to be removed from portable radio **500**. Therefore, portable radio **500** including electronic device **502** allows a user to communicate selected audio information to portable radio **500**.

FIG. **5**B illustrates automobile console having a mount for coupling an electronic device according to one aspect of the present invention. Console **510** includes mount **511** operable to receive electronic device **512**. Mount **511** may be located in many different locations within an automobile such as coupled to a sun visor, center console, dashboard, floorboard, etc. Mount **511** allows the user to couple electronic device **512** to the automobile and provide an interface for communication between electronic device **512** and the automobile audio system. Mount **511** may also include a power connection that allows electronic device **512** to use the automobiles power during use. The power connection may also be used in association with a recharging circuit operable to recharge a power supply within the electronic device. During operation, electronic device **512** coupled to mount **511** may receive selected audio information via wireless communication and communicate the selective information to the automobile audio system.

In one embodiment, the automobile may include memory operable associated with the automobile for storing-information. The memory may be used in association with mount **511** and electronic device **512** to store the selected audio information. In this manner, voluminous audio information can be stored within the memory allowing electronic device **512** to receive additional information. In one embodiment, a mount may be provided for a home audio system (not shown) for downloading selected audio information for use with a home audio system. For example, a mount device may be coupled to a home stereo system such that the upon placing an electronic device such as electronic device **500** within the mount, selected audio information may be communicated to the home audio system thereby allowing a home audio system to be used in association with an electronic device.

FIG. **6** illustrates a block diagram of a system for communicating voice mail messages using email according to one embodiment of the present invention. The system, indicated generally at **600**, includes email server **601** coupled to a voice mail storage device **602**. System **600** further includes a computer system or network terminal **603** such as a computer coupled to network **604**. System **600** further includes mount **605** for mounting electronic device **606** for hardwire communication of information. Device **606** may also communicate with network **604** using a wirelessly communication network operably associated with network **604** and coupled, for example, via tower **607**.

During operation, system **600** communicates voice mail messages to a user utilizing email server **601**. For example, if a user receives a voice mail message, email server **601** would be notified and a voice mail message would be sent to the user's email account in the form of an email message. For example, a voice mail message would be sent to a user's email account within intranet **604** in the form of an audio file as an attachment to the email. Upon receiving the email, a user may click on the audio file representing the voice mail message to hear the message left by a caller.

In one embodiment, a user may be accessing the Internet via a phone line and, as such, be unable to receive notification that a voice mail message has been received. System **600** would receive the voice mail message and send an email comprising the voice mail message to the user email account. In this manner, a user can remain connected to the network and receive voice mail without having to log off or disconnect from the Internet. In one embodiment, a user may receive the voice mail message via a portable electronic device. For example, a user may be using remote device **605** operable to receive wirelessly communicated information. System **600** would receive the voice mail message and forward the voice mail message to a user's portable electronic device **606**. In this manner, a user may be capable of receiving voice emails at remote locations.

In another embodiment, a user may subscribe to use an Internet email account that may be operably associated with system **600**. Utilizing an Internet email account may allow a user the flexibility to check voice email messages from any location in the world. For example, a user may access a "Hotmail" email account while traveling on business in a foreign country. The user, upon gaining access to the "Hotmail" account, would be able to listen to voice mail messages sent to the user via the "Hotmail" email account. Through utilizing an email account to receive voice mail messages, a user may be afforded great flexibility in communicating voice mail messages. For example, a user may be able to forward a voice mail message received in the form of an email to one or a plurality of other email accounts. In this manner, a voice email message may be sent efficiently to other email users.

For example, a user may maintain a distribution list of individuals working on a particular project that may have a need to hear certain voice email messages. In this manner, a user may efficiently disseminate information to other individuals while adding additional textual information to the body of the email allowing a user to comment on the original voice email message. In another embodiment, a user may forward a received voice email message to another account operable to receive forwarded voice email messages. For example, system **600** may be operable to receive an email message having a voice mail message as an attachment. The system would then be operable to forward the voice mail message to specified phone number, separate email account, and/or voice mail account, etc. thereby providing a user flexibility in receiving voice email.

In one embodiment, a user may utilize an email account to establish an answering service for voice mails. For example, a user's telephone number may be operable with an email account to provide an answering service. A user may record a message for a specified phone number or extension and, upon receiving an incoming call; the recorded message may be played back to incoming the call's initiator. System **600** would then forward the received voicemail message via an email account to the user. For example, a user may have an account set up at a residence for receiving voicemail messages via a user-defined email account. The user could then forward all received voice mails from the home account to an email account at a place of work. Therefore, the user may have complete access to received voicemail messages. In the same manner, a user could set up their work phone number to forward a voicemail message to the user's home email account thereby allowing a user to receive a voicemail at a home email account. Therefore, system **600** may be operable

in a plurality of ways to provide email messages comprised of voicemail messages received via a voice mail or email account.

FIG. **7** illustrates a flow chart for providing voice email messages according to one embodiment of the present invention. The method begins at step **701** where a voice mail message is left for a user. The message could be at a residence, place of business, etc. The method then proceeds to step **702** where the message may be stored as an audio file within a database operable to store a file comprised of the voice mail message. Upon storing the file, the method proceeds to step **703** where an electronic mail message may be generated. The electronic mail message may be addressed to the recipient of the voice mail message. The method then proceeds to step **704** where the audio file representing the voice mail message is attached to the electronic message.

Upon attaching the audio file, the method then proceeds to step **705** where the email message may be sent to the email address. Upon sending the email message the method proceeds to step **706** where the method determines if the email message should be sent to a wireless electronic device. If the message is not to be sent to a wireless device, the method proceeds to step **720** where the method ends. If the message is to be sent to a wireless electronic device, the method proceeds to step **707** where a signal may be sent to the wireless electronic device and at step **708** an indication is provided to the electronic device indicating that a voicemail message has been received via a user's email account. The method may then proceed to step **709** where the user decides whether or not to listen to the voice email message. If the user decides not to listen to the voice email message, the method may proceed to step **710** where the method ends. If the user decides to listen to the voice email message, the method proceeds to step **711** where a request may be sent by the electronic device requesting the voice email message be forwarded to the user's electronic device.

At step **712**, the voicemail message may be sent to the user's electronic device. Upon forwarding the voicemail message to the user the method may proceed to step **720** where the method ends. As such, FIG. **7** depicts one method of providing an email message comprised of a voice mail message. Certainly, other methods may be deployed as advancements in technology and are made without departing for the spirit and scope of the present invention.

FIG. **8** illustrates a flow diagram of a method for providing selected audio information to an electronic device according to one embodiment of the present invention. The method begins at step **800** where a user accesses a webpage via the Internet. The webpage may be a home page illustrated in FIG. **4** or other web pages operable to display selectable references to audio information. The method proceeds to step **801** where a user selects desirable audio information. For example, a user may select a single song, a plurality different songs, an entire album, a broadcast station, streaming audio, etc. or other selectable audio information. Upon the user selecting a reference to audio information, the method may proceed to step **802** where a playlist may be created that represents the user's selected audio information.

The playlist may be variable in size and comprised of a plurality of different types of available audio information. Upon creating a playlist, the method may proceed to step **803** where information associated with the playlist is obtained. For example, a list of network or URL locations comprised of the desirable audio information may be obtained. In this manner, desirable audio information may be obtained from many different sources such as URLs, network addresses, hard drives, databases comprised of audio information, etc. The sources may be accessed to obtain the selected audio information.

Upon obtaining data associated with the customized playlist, the method may proceed to step **804** where the user is prompted for a destination for the playlist. For example, a user may want to communicate the selected audio information to a remote electronic device, an automobile audio system, a home stereo system, a home computer, an electronic device coupled to a home network or computer system, etc. or other locations or devices operable to receive the selected audio information. In one embodiment, a user may select a device owned by a friend to accept the selected audio information. For example, a husband may want to send a romantic playlist to his wife on their anniversary. In this situation, the husband would select his wife's electronic device as the receiving device for the selected audio information.

Upon selecting a device, the method proceeds to step **805** where the method determines the destination of the selected audio information. If the information is to be sent to a device via a wire line connection, the method proceeds to step **813** where playlist data is sent to a user via a wire line connection. The method may then proceed to step **814** where the playlist is executed at the device. If the information is to be sent to a device requiring wireless communication, the method proceeds to step **806** where the information is formatted for communicating the information to a wireless electronic device. For example, a wireless PDA device may be selected as a destination device for the selected audio information. The PDA device may include an audio player, such as an MP3 player operable to play or execute MP3 audio files. In such an embodiment, the method could format the information such that the information may be wirelessly communicated and subsequently played by the MP3 player.

Upon formatting the information, the method may then proceed to step **807** where the audio information is wirelessly communicated to the selected device. In some embodiments, the device may be operable to receive a limited amount of information based upon storage capacity of the device (i.e., 16 MB). In such a case, the method may divide the information into component parts and periodically communicate the component parts, such as packets, to the electronic device. Upon communicating the audio information, the method may then proceed to step **808** where the signal may be received by the destination or electronic device.

The method may then proceed to step **809** where the method determines if all of the audio information has been received. For example, if 16 MB or 32 MB of selected audio information was initially transmitted due to capacity limitations of the selected device, the method may query the selected device to determine if capacity is available. If available memory exists, the method may proceed to step **807** where the method may communicate additional audio information based upon the amount of available memory. The method repeats until all of the selected audio information has been transmitted.

Upon communicating the selected information, the method may proceed to step **810** where the playlist may be executed. For example, a user may select a continuous communication of selected audio information (e.g., several hours of music. Internet broadcast, etc.). As such, the method may continuously play or execute the received audio information. In another embodiment, the method may proceed to step **811** where the method may store or buffer the received information until it is desirable to execute the received selected audio information. As such, upon executing the selected audio information, the method may proceed to step **809** where the

method may repeat. In one embodiment, a user may elect to download a broadcast of an on-line radio station. For example, a user may want to listen to a radio station located in a remote location wherein conventional radio receivers could not receive the desired broadcast. For example, a person living in Houston, Tex. may not be able to receive a radio broadcast signal from a radio station in Seattle, Wash. utilizing a conventional radio receiver.

In accordance with the teachings of the present invention, a user may select an on-line broadcast or radio station as all or a part of the selected audio information. The user may then receive radio broadcasts without having to use a home computer system or conventional radio receiver.

At step **804**, a user may select a device that does not require remote communication of information. For example, a user may elect to communicate the selected audio information to device, such as a personal computer, PDA device, MP3 player, etc. coupled via a network connection to the Internet or an Intranet. The user may receive the selected playlist at the determined device for eventual playing. In one embodiment, a user may select a plurality of devices as destination devices for receiving downloads of the selected audio information. For example, the user may want to download the information to a home stereo system, a PDA device, and an automobile stereo. As such, the selected information may be communicated to more than one destination device. In addition, the format of the download may match or conform to the selected destination device(s).

The present invention may be configured in a plurality of ways to communicate desirable audio information to users by allowing users to select desirable audio information and transmitting the desirable audio information to a specified destination thereby allowing a user to receive on-demand customized audio information. Moreover, the download may occur in an off-line environment, allowing a user to enjoy the selected audio information accessed on-line without having to be on-line or utilizing a browsing environment. In one embodiment of the present invention, the method of FIG. **8** may be modified to allow a user to select a "user group" for receiving customized audio information. For example, a "user group" may include users that prefer contemporary jazz wherein a user may request a certain song. Therefore, a virtual request line may be designed for a specific genre of music allowing "members" to transmit audio information to the "group".

In another embodiment of the present invention, the method may be modified to allow a user to select a specific genre to be transmitted to the users device. For example, a user may elect to have random country and western music transmitted to a destination device. The user could efficiently create a radio station format and have the format received at a destination device.

In a further embodiment, a user may select a group of genres to be downloaded to a desirable device. As such, the method may be modified to allow a user to select several different genres to download random music within the specified genres. In another embodiment, a user may elect to download the same music as another individual. For example, a user may want to download the same music as their best friend. Therefore the user could elect to download the same music as their friend or group of friends. In another example, a user may want to listen to the same music that an artist listens to on a specific weekday of evening. For example, a user may want to listen to the same music that Barry White listens to on a Saturday night.

Therefore, the user may select "Barry White's" Saturday night playlist and receive the same playlist Barry White receives on Saturday night. In another embodiment, the method of FIG. **8** may be modified to allow a user to manipulate song post download. For example, a user may want to store, delete, replay, copy, forward, etc. received audio information. Therefore, the method of FIG. **4** may be modified such that a user can manipulate or process the received audio information in a plurality of ways. In one embodiment of the present invention, an on-line radio station may be provided. For example, the radio station may be created for transmitting audio or on-line broadcasts. The on-line broadcasters or hosts may create their own format for broadcast. For example, an on-line radio station may be provided that transmits only children's songs.

Prior to conception of the present invention, conventional radio stations were monetarily limited to be capable of transmitting music such as children's songs to conventional radio receivers. The present invention, by providing a medium for transmitting selectable audio information, enables the existence of on-line broadcasting with little or no overhead cost for a host. A user may select an on-line broadcast for on-line or off-line delivery. In another embodiment, on-line broadcast of audio information representing books or novels may be provided to individuals such as the visually impaired. For example, an on-line broadcast station may provide several hours of audio information broadcast representing books or novels to be broadcast with very little overhead.

FIG. **9** illustrates an automobile console having a mount for an electronic device according to one embodiment of the present invention. Console **900** includes a conventional audio system **901** comprised of a receiver **902** and CD player **903**. Interface **904** may be coupled to audio system **901** via plug **905** and cable **908**, which may be coupled to an auxiliary line into audio system **901**. Interface **904** may also include contact **906** for contacting electronic device **907**. Cable **908** may be a multiple conductive cable for providing power from the automobiles power system via a protection circuit or fuse **909** for powering electronic device **907**. In one embodiment, interface **904** may be operable to recharge electronic device **907** utilizing a power source associated with an automobile.

During operation, electronic device **907** may be mounted within interface **904**. Electronic device **907** may also be powered or recharged via power line **910** and communicate with the systems audio system via interface cable or bus line **911**. Audio information communicated to electronic device **907** may be transferred to audio system **901** such that a user may listen to selected audio information. For example, a user may have previously selected a plurality of audio files to be transmitted to electronic device **907**. Electronic device **907** may communicate the selected audio information to the automobiles audio system that utilizes interface **901** thereby allowing the user to listen to selected audio information. In one embodiment, cable **908** may be custom-installed to audio system **901**. For example, the cable may be coupled to an auxiliary line for the system's radio or may be coupled to CD player line **912**.

In another embodiment, a radio manufacturer may provide interface **904** as a standard interface integrated into the audio system, thereby allowing communication between electronic device **907**, audio system **901** and/or console **900**. Electronic device **907** may include a plurality of different types of devices. For example, electronic device **907** may include a PDA device operable to store selected audio information. The information may be either remotely downloaded using an Internet web browser and wireless communication to the PDA device. In another embodiment, selected audio information may communicated to a PDA device via a hard wire coupled to a computer system interfacing with the Internet. In

another embodiment, electronic device **907** may include an audio file player operable to play audio files such as MP3s, etc.

The audio files may be remotely or locally communicated to electronic device **907** and upon coupling to audio system **901**, the audio files may be transmitted to audio system **901** in a form receivable by audio system **901**. Although the disclosed embodiments have been described in detail, it should be understood that various changes, substitutions and alterations can be made to the embodiments without departing from their spirit and scope.

The benefits, advantages, solutions to problems, and any element(s) that may cause any benefit, advantage, or solution to occur or become more pronounced are not to be construed as a critical, required, or essential feature or element of the present invention. Accordingly, the present invention is not intended to be limited to the specific form set forth herein, but on the contrary, it is intended to cover such alternatives, modifications, and equivalents, as can be reasonably included within the spirit and scope of the invention as provided by the claims below.

While the present invention has been described with respect to a limited number of embodiments, those skilled in the art will appreciate numerous modifications and variations therefrom. It is intended that the appended claims cover all such modifications and variations as fall within the true spirit and scope of this present invention.

What is claimed is:

1. A music enabled communication system, comprising:

a wireless telephone device, the device having (1) a display at least partially defining a front surface of the device, (2) a housing component at least partially defining a back surface of the device, (3) an enclosure located between the front surface and the back surface, (4) a wireless communication module located within the enclosure, (5) a rechargeable power supply located within the enclosure, (6) a physical interface having a first and a second conductive path, the physical interface operable to communicate data via the first conductive path and to receive a recharging power for the rechargeable power supply via the second conductive path, and (7) a memory system, located within the enclosure; and

a collection of instructions stored in the memory system, the collection of instructions operable when executed to communicate a collection of information about media content available from the wireless telephone device to a recipient device such that the recipient device can use the collection of information to generate a graphical menu comprising a selectable menu item associated with the available media content, to utilize the wireless communication module to stream a signal representing at least a portion of a song to the recipient device using a given asynchronous wireless channel of a localized communications signaling network, to recognize receipt of an incoming telephone call, and to alter an outputting of the signal in connection with recognizing receipt of the incoming telephone call.

2. The system of claim **1**, wherein the wireless communication module is compliant with a Bluetooth standard.

3. The system of claim **2**, further comprising an email client operable to communicate with an email server, a voicemail client operable to communicate with a voice mail server, and a browser operable to communicate with an Internet server.

4. The system of claim **2**, wherein the wireless telephone device is a dual mode device operable to receive both a wireless digital signal and a wireless analog signal and the collection of information about media content is configured to be communicated via an interface selected from a group consisting of a channel of the localized communications signaling network and the physical interface.

5. The system of claim **2**, wherein the collection of instructions comprises a set of hands-free telephone instructions operable when executed to allow the wireless telephone device to operate in a hands-free mode when the wireless telephone device is wirelessly coupled with a wireless component of an automobile.

6. The system of claim **1**, wherein the display makes up more than half of the front surface and the wireless telephone device is operable to receive a collection of data representing a media at a hybrid of wireless communication rates that includes at least one faster rate and one slower rate.

7. The system of claim **1**, further comprising a buffer memory located within the enclosure, wherein the wireless telephone device is operable to receive media content as a series of component parts, further wherein the wireless telephone device is operable to receive a component part of the media content at a wireless communication rate and a different component part of the media content at a different wireless communication rate, wherein the wireless telephone device is operable to cause a change in communication rates at which a given component part is received based at least partially upon an amount of data located in the buffer memory.

8. A system for wirelessly communicating musical content, comprising:

a portable electronic device having a processor operable to play an audio file that represents a song;

a memory communicatively coupled to the processor and configured to store a plurality of audio files; and

a wireless communication module communicatively coupled to the processor and operable to communicate a streaming audio signal that represents a playing of the song to a recipient device via a localized communications signaling network in response to a selection of a selectable menu item presented on a recipient device display, wherein the wireless communication module is compliant with a Bluetooth standard, further wherein the wireless communication module is configured to communicate at least a portion of the streaming audio signal to the recipient device using an asynchronous channel.

9. The system of claim **8**, wherein the portable electronic device is operable as a wireless telephone device and has (1) a display at least partially defining a front surface of the device, (2) a housing component at least partially defining a back surface of the device, (3) an enclosure located between the front surface and the back surface, (4) a rechargeable power supply located within the enclosure, and (5) a non-circular physical interface having a first and a second conductive path, the non-circular physical interface operable to communicate data via the first conductive path and to receive a recharging power for the rechargeable power supply via the second conductive path.

10. The system of claim **9**, wherein the portable electronic device comprises a software application, further wherein the portable electronic device is configured to accept an upgrade for the software application that is communicated to the portable electronic device via a software upgrading wireless communication.

11. The system of claim **8**, wherein the wireless communication module is operable to communicate the streaming audio signal at a communication rate that provides for a CD quality listening experience.

12. The system of claim **8**, wherein the portable electronic device is operable as a wireless telephone device and has (1) a display at least partially defining a front surface of the device, (2) a housing component at least partially defining a back surface of the device, (3) an enclosure located between the front surface and the back surface, (4) a wide area wireless communication module operable to receive a collection of data representing a media at a hybrid of wireless communication rates that includes at least a first rate and a second rate, and (5) a buffer memory, wherein a change in communication rates is at least partially based upon an amount of data located in the buffer memory.

13. The system of claim **8**, wherein the portable electronic device has (1) a display at least partially defining a front surface of the device, (2) a housing component at least partially defining a back surface of the device, (3) an enclosure located between the front surface and the back surface, (4) a different wireless communication module located within the enclosure and operable to receive a collection of data representing a media, wherein the wireless communication module communicatively coupled to the processor is further operable to wirelessly communicate a signal representing the media to the recipient device while the different wireless communication module is receiving the collection of data representing the media.

14. The system of claim **8**, further comprising an internal battery and means for recharging the internal battery.

15. A system for communicating advanced media content, comprising:

an audio system having a memory system, a speaker assembly, and a wireless communication module configured to receive a streaming signal representing a piece of musical content from a different electronic device;

the wireless communication module operable to receive at least a portion of the streaming signal via an asynchronous channel of a localized communications signaling network after the audio system recognizes a selection of a selectable menu item presented on a display, wherein the selectable menu item comprises a name for the piece of musical content and is associated with the piece of musical content;

the memory system comprising a buffer operable to buffer at least some of the streaming signal received by the wireless communication module; and

the speaker assembly operable to output a sound representing the piece of musical content.

16. The system of claim **15**, wherein the audio system further comprises an in-band on-channel radio receiver and a communicative coupling means for receiving audio information from the different electronic device such that the audio system can use at least a portion of the audio information to initiate presentation of the selectable menu item on the display.

17. The system of claim **15**, further comprising instructions stored in the memory system and operable when executed to communicatively couple with a wireless telephone and to work with the wireless telephone while the wireless telephone is in a hands-free mode.

18. The system of claim **15**, further comprising a video presentation system that comprises the audio system.

19. The system of claim **15**, further comprising an automobile that comprises the audio system.

20. The system of claim **15**, further comprising instructions stored in the memory system and operable when executed to utilize the speaker assembly to output a call to a wireless telephone that is communicatively coupled to the audio system and in a hands-free mode.

* * * * *

Exhibit D

Affinity Labs Exemplary Infringement Chart for U.S. Patent No. 7,187,947, claim 43

No.	Claim	BlackBerry DTEK50 Exemplary Infringement Support
17.	A cellular communication device, comprising:	BlackBerry directly infringes this claim by making, using, selling, or offering for sale the DTEK50. Alternatively, BlackBerry induces its customers to infringe this claim. Alternatively, BlackBerry contributorily infringes this claim. The DTEK50 is a cellular communication device. **DTEK50** North America and Latin America: LTE Advanced, with speeds up to 300 Mbps for data downloads FD-LTE 1, 2, 3, 4, 5, 7, 12, 17, 20, 29, 30 (2100/1900/1800/1700/850/2600/700/700/800/700/2300 MHz) HSPA+ 1, 2, 4, 5, 8 (2100/1900/1700/850/900 MHz) Quad band GSM/GPRS/EDGE (850/900/1800/1900 MHz) Europe, Middle East, Africa and Asia Pacific: LTE Advanced, with speeds up to 300 Mbps for data downloads FD-LTE 1, 2, 3, 7, 8, 20, 28A (2100/1900/1800/2600/900/800/700 MHz) TD-LTE 38, 40, 41 (2600/2300/2500 MHz) HSPA+ 1, 2, 5/6, 8 (2100/1900/850/900 MHz) Quad band GSM/GPRS/EDGE (850/900/1800/1900 MHz) https://us.blackberry.com/smartphones/dtek50-60-by-blackberry/specifications

		 https://us.blackberry.com/smartphones/dtek50-60-by-blackberry/overview

<table>
<tr>
<td>17.a</td>
<td>a processor configured to play plural audio information formats;</td>
<td>The DTEK50 has a processor configured to play a plurality of audio information formats.
<table>
<tr><td>Performance</td><td>Processor</td><td>DTEK60

Qualcomm Snapdragon 820 64-bit Quad-Core (MSM8996 with 64 bit Quad-Core 2+2 Kryo 2.15GHz / 1.6GHz)

Adreno 530, 624MHz GPU

DTEK50

Qualcomm Snapdragon 617 Oct-Core, 64-bit (MSM8952 with 64 bit Quad-core 1.5 GHz Cortex-A53 + Quad-core 1.2 GHz Cortex-A53)

Adreno 405, 550MHz GPU</td></tr>
</table>
https://us.blackberry.com/smartphones/dtek50-60-by-blackberry/specifications
<table>
<tr><td>Multimedia</td><td>Image formats</td><td>BMP, JPG, GIF, PNG, WEBP</td></tr>
<tr><td></td><td>Audio & video formats</td><td>3GP, 3G2, AAC, AVI, ADTS, ASF, AWB, DIVX, FLAC, IMY, MID, MKV, MOV, MP3, MPEG-4, MXMF, OGG, OTA, RTTTL, RTX, WAV, WEBM, WMV, XMF</td></tr>
<tr><td></td><td>Audio & video encoding/decoding</td><td>MPEG-4, AAC+, AAC-LC, AMR-NB, AMR-WB, DivX, EVRC, FLAC, H.263, H.264, H265/HEVC, MIDI, MP3, OPUS, PCM, QCELP, VC-1, VORBIS, VP8, VP9, WMA, WMA 9/10, WMA Pro, Xvid, eAAC+</td></tr>
<tr><td></td><td>Streaming protocols</td><td>HTTP(S) Progressive Download, HTTP(S) Live Streaming (HLS) version 3, RTSP (RTP, SDP)</td></tr>
</table>
</td>
</tr>
</table>

		Apps — **Pre-loaded apps** BlackBerry Applications: BlackBerry® Keyboard, BlackBerry® Hub, BlackBerry Calendar, Contacts by BlackBerry, Notes by BlackBerry, Tasks by BlackBerry, BlackBerry Camera, BBM®, DTEK™ by BlackBerry®, BlackBerry Device Search, BlackBerry Launcher, BlackBerry Services, BlackBerry Help, BlackBerry Password Keeper, Microsoft exFAT Technology for BlackBerry, BlackBerry Content Transfer, Yahoo!® Finance Android Applications: Gmail™, Hangouts™, Google Chrome™, Google Drive™, Google Maps™, YouTube®, Google Play™, Google Photos, Messenger (SMS), Android Device Manager https://us.blackberry.com/smartphones/dtek50-60-by-blackberry/specifications

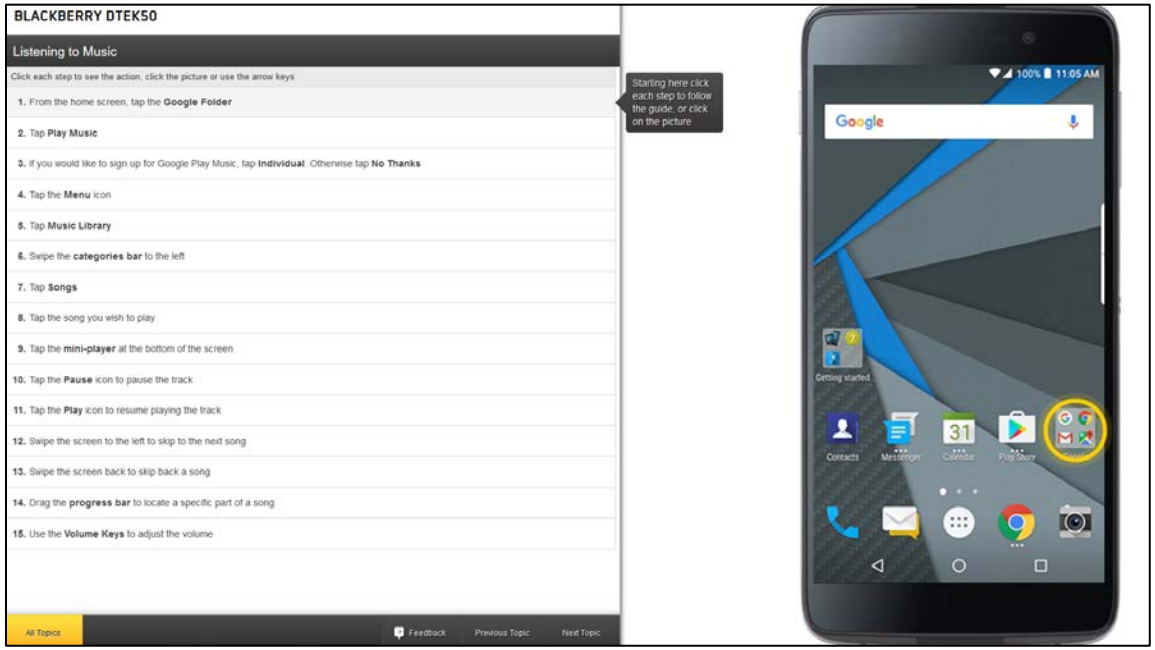

https://videotron.tmtx.ca/en/topic/blackberry_dtek50/listening_to_music.html#step=1

17.b	a communication module configured to receive a wirelessly communicated collection of digital packets representing a user selected media having a first audio information format;	The DTEK50 has a communication module that is configured to receive wireless transmissions that constitute collections of digital packets. The DTEK50 is configured to receive a wirelessly communicated collection of digital packets over a 3G, 4G, or WiFi connection. **Multimedia** **Image formats**: BMP, JPG, GIF, PNG, WEBP **Audio & video formats**: 3GP, 3G2, AAC, AVI, ADTS, ASF, AWB, DIVX, FLAC, IMY, MID, MKV, MOV, MP3, MPEG-4, MXMF, OGG, OTA, RTTTL, RTX, WAV, WEBM, WMV, XMF **Audio & video encoding/decoding**: MPEG-4, AAC+, AAC-LC, AMR-NB, AMR-WB, DivX, EVRC, FLAC, H.263, H.264, H265/HEVC, MIDI, MP3, OPUS, PCM, QCELP, VC-1, VORBIS, VP8, VP9, WMA, WMA 9/10, WMA Pro, Xvid, eAAC+ **Streaming protocols**: HTTP(S) Progressive Download, HTTP(S) Live Streaming (HLS) version 3, RTSP (RTP, SDP)

		Apps — **Pre-loaded apps** BlackBerry Applications: BlackBerry® Keyboard, BlackBerry® Hub, BlackBerry Calendar, Contacts by BlackBerry, Notes by BlackBerry, Tasks by BlackBerry, BlackBerry Camera, BBM®, DTEK™ by BlackBerry®, BlackBerry Device Search, BlackBerry Launcher, BlackBerry Services, BlackBerry Help, BlackBerry Password Keeper, Microsoft exFAT Technology for BlackBerry, BlackBerry Content Transfer, Yahoo!® Finance Android Applications: Gmail™, Hangouts™, Google Chrome™, Google Drive™, Google Maps™, YouTube®, Google Play™, Google Photos, Messenger (SMS), Android Device Manager https://us.blackberry.com/smartphones/dtek50-60-by-blackberry/specifications

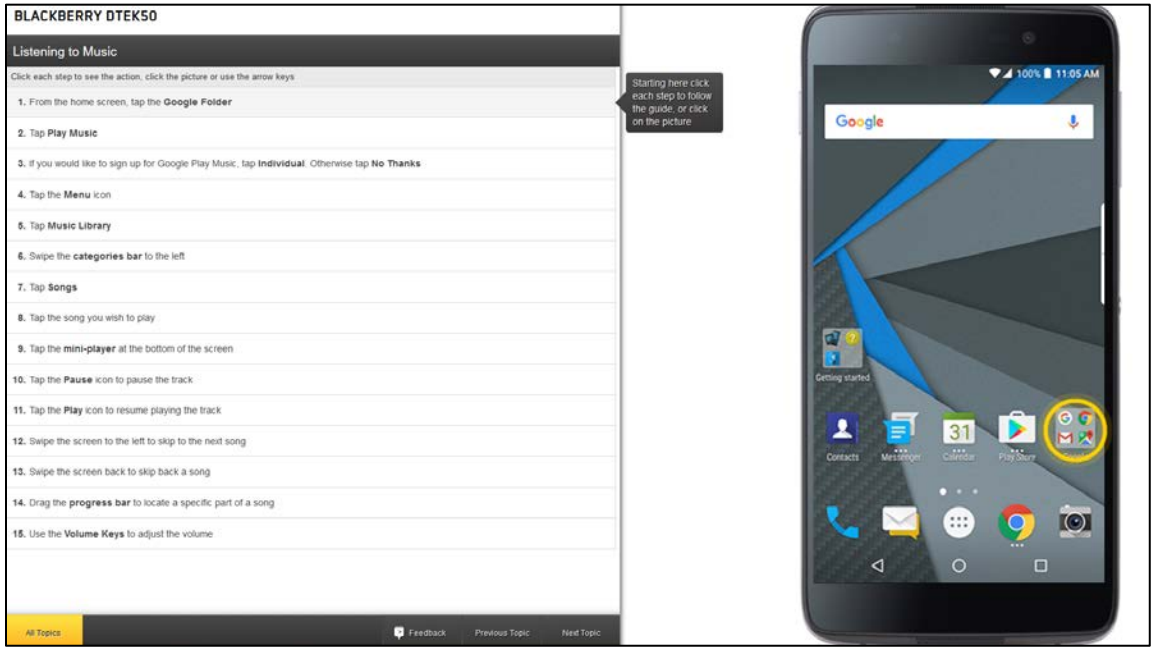

https://videotron.tmtx.ca/en/topic/blackberry_dtek50/listening_to_music.html#step=1

Wi-Fi®	802.11 b/g/n 2.4 GHz
	802.11 a/n 5GHz
	802.11 ac 5GHz
	4G Mobile Hotspot
	Wi-Fi Direct
FM Radio	Supported (DTEK50)
Bluetooth®	Bluetooth 4.2 Low Energy (LE) and EDR
GPS	Assisted, Autonomous and Simultaneous GPS
	Support for User Plane and Control Plane GPS
	GLONASS, BeiDou
	OTDOA
	Pre-loaded Google Maps
NFC	NFC technology is used to create a connection to share information between your BlackBerry device and other NFC-enabled devices or NFC tags. Features on DTEK50 and DTEK60 that use NFC technology include Android Beam, Tap and Pay, and Tap and Go.

https://us.blackberry.com/smartphones/dtek50-60-by-blackberry/specifications

17.c	a display configured to present a user interface that comprises an icon representing a locally stored audio file;	The DTEK50 has a display that can present a user with a selectable icon that is linked to and represents a locally stored audio file when running the Google Play Music application on the DTEK50. As shown below, the DTEK50 running the Google Play Music application shows a selection of songs stored on the DTEK50 wherein a song title may represent a locally stored audio file that can be selected for playing. https://us.blackberry.com/smartphones/dtek50-60-by-blackberry/overview

		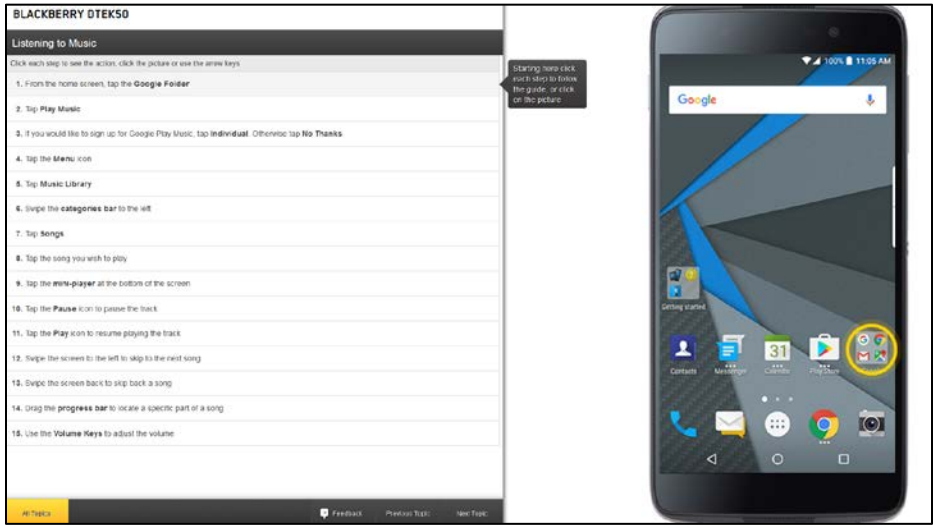 https://videotron.tmtx.ca/en/topic/blackberry_dtek50/listening_to_music.html#step=1

17.d	an updateable user interface engine configured to accept an over the air download of an updated user interface file;	The Google Play Music application on the DTEK50 is an updateable user interface engine that permits a user to navigate through song titles, artists, albums, etc. and select a particular song for playing. The Google Play Music application on the DTEK50 is configured to permit the interface for navigating and selecting songs to be updated when songs are purchased and downloaded through the Google Play Store application. 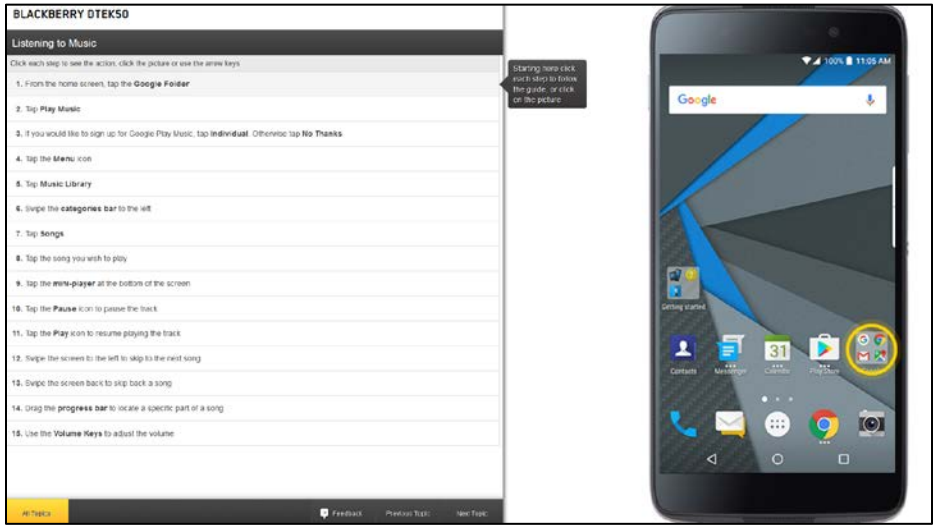 https://videotron.tmtx.ca/en/topic/blackberry_dtek50/listening_to_music.html#step=1 **Download music to listen offline** You can download music you've purchased or added to Google Play to your mobile device or computer so you can listen when you don't have an Internet connection. If you subscribe to Google Play Music, you can also download subscription tracks to your mobile device. **Note**: Signing out of your account will remove downloaded music from your device.

		See and manage downloads on your mobile device See only your downloaded music 1. Open the Google Play Music app. 2. Tap Menu ≡ > **Downloaded Only**. When you have **Downloaded only** selected, the switch will be orange and you will see a banner across the top of your screen. Tap the switch or banner again to view all music in your library. View your download queue 1. Open the Google Play Music app. 2. Tap Menu ≡ > **Settings** > **Manage downloads**. https://support.google.com/googleplaymusic/answer/1250232?hl=en

17.e	and to utilize the updated user interface file to initiate presentation of a different user interface on the display, wherein the different user interface comprises a new icon representing the user selected media;	The DTEK50 utilizes the updated user interface file to initiate presentation of a different user interface on the display. Once a music file is purchased and downloaded from the Google Play Store, an icon representing the new song is included in the user interface of the Google Play Music application. **How to use Google Play Music** Use Google Play Music to listen to your favorite songs and store your music collection. You can also create playlists, listen to radio, and more. **Add your personal collection** You can store up to 50,000 of your songs for free. **Upload music to the cloud**: To upload music to the cloud, you can use Music Manager or Google Play Music for Chrome. Music Manager is available for Mac, PC, and Linux. If you're using a Chrome browser or Chromebook, we recommend using Google Play Music for Chrome. **Transfer files to a specific device**: To transfer files to a specific device, follow the instructions for transferring music from a computer to a device. **Listen to music on different devices** When you're signed in to the account you use on Google Play Music, you can listen to music on your computer or mobile device, Android TV, Sonos, or with Android Auto, Android Wear, or Chromecast. **Stream music** **Without a subscription to Google Play Music in the U.S.**, you can stream free radio stations based on your mood, activity, or your favorite popular music. You can skip songs up to 6 times per hour. Learn more about free radio. **With a subscription to Google Play Music**, you can stream over 30 million songs in the Google Play catalog ad-free. You can also skip songs as much as you like and listen to music offline. Learn more about subscribing to Google Play Music. **Create playlists and radio stations** You can make playlists and start radio stations (in available countries) based on your favorite artists or songs in your library. If you subscribe to Google Play Music, you won't see any ads or skip limits. https://support.google.com/googleplaymusic/answer/4515411?hl=en&ref_topic=6230811

		Download music to listen offline You can download music you've purchased or added to Google Play to your mobile device or computer so you can listen when you don't have an Internet connection. If you subscribe to Google Play Music, you can also download subscription tracks to your mobile device. **Note**: Signing out of your account will remove downloaded music from your device. **See and manage downloads on your mobile device** See only your downloaded music 1. Open the Google Play Music app. 2. Tap Menu ≡ > **Downloaded Only**. When you have **Downloaded only** selected, the switch will be orange and you will see a banner across the top of your screen. Tap the switch or banner again to view all music in your library. View your download queue 1. Open the Google Play Music app. 2. Tap Menu ≡ > **Settings** > **Manage downloads**. https://support.google.com/googleplaymusic/answer/1250232?hl=en

		Music library won't sync to phone or tablet If music you've recently purchased from the Google Play Store or uploaded from your computer isn't showing in your Google Play Music library, try the steps below. Check your library after each step to see if it has synced correctly. **Step 1: Refresh your library** 1. Open the Google Play Music app. 2. Tap Menu ≡. 3. Make sure the **Downloaded only** switch is off. The switch is gray when it's off. 4. Tap **Settings** > **Refresh**. 5. Wait two minutes, and view your library again. Step 2: Check if you're on the right account Step 3: Check sync settings Step 4: Clear your app's data Step 5: (If you use 2-step verification) Check your App Password https://support.google.com/googleplaymusic/answer/7076350?hl=en

<table>
<tr>
<td>17.f</td>
<td>a memory operable to store plural audio information formats; and</td>
<td>The DTEK50 has memory that is capable of storing audio files in various audio information formats.
<table>
<tr><td>Memory</td><td>DTEK60</td></tr>
<tr><td></td><td>4 GB RAM</td></tr>
<tr><td></td><td>32 GB Flash</td></tr>
<tr><td></td><td>DTEK50</td></tr>
<tr><td></td><td>3 GB RAM</td></tr>
<tr><td></td><td>16 GB Flash</td></tr>
<tr><td>Expandable memory</td><td>Expandable memory via hot swappable microSD memory card (Up to 2TB)</td></tr>
</table>
https://us.blackberry.com/smartphones/dtek50-60-by-blackberry/specifications</td>
</tr>
</table>

Google Play Music supported file types

If you're using Music Manager or Google Play Music for Chrome to upload music to your library, here are the types of files you can upload.

Note: Each music file can be up to 300 MB. When a file is converted to an MP3, the 300 MB limit applies to the converted MP3 file.

Supported file type	Notes about supported file type
MP3 (.mp3)	
AAC (.m4a)	Files are converted to the same bitrate (quality) .mp3 files
WMA (.wma)	Can be uploaded using the Windows version of Music Manager, not Google Play Music for Chrome
FLAC (.flac)	16 and 24-bit mono or stereo files supported Files are converted to 320 kbps .mp3 files
OGG (.ogg)	Files are converted to the same bitrate (quality) .mp3 files
DRM protected AAC (.m4p)	Some .m4p files can't be uploaded Files are converted to the same bitrate (quality) .mp3 files
ALAC (.m4a)	16-bit files supported Files are converted to 320 kbps .mp3 files

Some music file types, including WAV (.wav), AIFF (.aiff), and RA (.r) can't be uploaded to your library using Music Manager or Google Play Music for Chrome.

https://support.google.com/googleplay/answer/1100462?hl=en&ref_topic=2450455

17.g	a Bluetooth communication module communicatively coupled to the processor such that a played audio information format can be communicated to a wireless speaker.	The DTEK50 has a Bluetooth communication module communicatively coupled to the processor. The Bluetooth module in the DTEK50 is coupled to the processor such that an audio file that is played in a given audio format by the DTEK50 can be communicated wirelessly via the Bluetooth protocol to a wireless speaker. **Bluetooth technology** Bluetooth wireless technology allows you to create a direct connection between your device and another Bluetooth enabled device. For example, you can use a Bluetooth connection to play music through a separate speaker, make calls on a headset, share files, or connect to Android Wear™ or a car kit. Before you can connect to a Bluetooth enabled device, you must turn on Bluetooth technology on your device and then pair the two devices. Some paired devices, for example, a car kit, usually connect to your device automatically. DTEK50 User Guide at 59. A seamless and clutter-free way to extend music from your device to your car stereo is to do so wirelessly. Using the Bluetooth® A2DP audio streaming profile supported by most smartphones today, your device can stream music to any car stereo that supports the Bluetooth A2DP profile. http://blogs.blackberry.com/2009/05/wirelessly-stream-mp3s-from-your-blackberry-device-to-car-stereo/

Supported Bluetooth profiles

Your device is a Bluetooth Smart Ready device, and supports the following profiles.

Profile	Description
Advanced Audio Distribution Profile (A2DP)	This profile allows your device to stream audio files to Bluetooth enabled devices that support stereo audio, such as stereo headsets, speakers, and car kits.
Audio/Video Remote Control Profile (AVRCP)	This profile allows you to use the buttons on a Bluetooth enabled device, such as a headset, to perform actions such as adjusting the volume or playing the next or previous media file on your device. This profile also displays information about songs on a Bluetooth enabled device.
Device Identification Profile (DID)	This profile allows Bluetooth enabled devices to access information about your device model to support plug and play features, such as automatically downloading the required drivers.
Hands-Free Profile (HFP)	This profile allows you to connect your device to Bluetooth enabled headsets and car kits to make hands-free calls. This profile supports wideband audio.
Headset Profile (HSP)	This profile allows you to connect your device to a Bluetooth enabled headset.
Human Interface Device Profile (HID)	This profile allows you to connect your device to a Bluetooth enabled device, such as a keyboard or mouse.

DTEK50 User Guide version 6.0, published: 2016-07-19 ("DTEK50 User Guide") at 61.

Profile	Description
Human Interface Device over Gatt Profile (HOGP)	This profile allows you to connect your device to a Bluetooth Smart device, such as a keyboard or mouse.
Message Access Profile (MAP)	This profile allows a car kit to access text messages (SMS and MMS) on your device and lets you browse and read the text messages. If supported by the car kit, you can also delete, compose, and send text messages from your car.
Object Push Profile (OPP)	This profile allows your device to send files to and receive files from a Bluetooth enabled device.
Personal Area Network Profile (PAN)	This profile allows you to use your device to share your network connection when connected to a Bluetooth enabled computer. This profile also lets you connect your device to another device that is sharing its network connection.
Phone Book Access Profile (PBAP)	This profile allows a Bluetooth enabled car kit to access contact information and recent call history information on your device. This profile allows the car kit to display the contact name for an incoming call.
Serial Port Profile (SPP)	This profile allows you to connect your device to other Bluetooth enabled devices that support the Serial Port Profile for data transfer.
Remote SIM Access Profile (rSAP)	This profile allows a Bluetooth enabled device, such as a car kit, to access the SIM card on your device.

DTEK50 User Guide at 62.

43.	The device of claim 17, further comprising: an interface configured to releasable engage with a docking mechanism of a separate soundsystem such that: (1) a power source of the separate sound system can recharge a power supply of the cellular communication device via the interface, and (2) the played audio information format can be communicated to the separate sound system via the interface.	The DTEK50 has an interface configured to releasable engage with a docking mechanism of a separate soundsystem such that: (1) a power source of the separate sound system can recharge a power supply of the cellular communication device via the interface, and (2) the played audio information format can be communicated to the separate sound system via the interface. 1. Headset jack 2. Notification LED and front flash 3. Front camera 4. Volume up/down key 5. Convenience key 6. Nano SIM card and media card (microSD card) tray 7. USB port 8. Power on/off key DTEK50 User Guide at 5.

Power	Battery	**DTEK60** 3000 mAh 4.4V non-removable Lithium Ion battery QC3.0 Enabled **DTEK50** 2610 mAh 4.4V non-removable Lithium Ion battery QC2.0 Enabled – 50% charge in 51 minutes

https://us.blackberry.com/smartphones/dtek50-60-by-blackberry/specifications

Battery life[1]	
	DTEK60
	Up to 24 hours mixed battery life[1]
	Up to 26 hours talk time
	Up to 14 days standby time
	Up to 88 hours audio playback
	Up to 17 hours video playback
	DTEK50
	Up to 17 hours mixed battery life[1]
	Up to 17 hours talk time
	Up to 12.8 days standby time
	Up to 40 hours audio playback
	Up to 8 hours video playback

https://us.blackberry.com/smartphones/dtek50-60-by-blackberry/specifications

		Battery and power **Check your battery power level and usage info** You can see which apps and features are using the most battery power and how much battery power you have left. 1. Swipe down from the top of the screen once using two fingers, or twice using one finger. 2. Tap ⚙ > **Battery**. **Charge your device** **CAUTION:** Use the charging accessory that came with your device, or a charger specifically approved by BlackBerry for use with your device. Other chargers might not provide adequate power and might damage your device. 1. Hold the cable with the BlackBerry logo facing the front of the device, and insert the cable into the port on your device. 2. Plug the charger into a power outlet. **Keeping your battery charged** Your device uses a lithium-ion battery. To maximize your use of this type of battery, when possible, do the following: • Avoid using your device while it's charging to help it charge faster. • Do not leave your device plugged into a charger after it has reached a full charge. • Avoid charging, using, or storing your device in extremely hot or cold places, such as on a vehicle dashboard. • Avoid leaving your device turned off for an extended periods when the battery power level is low. If you plan to store your device for an extended period, partially charge the battery and put the device in a cool, dry place. DTEK50 User Guide at 70.

Exhibit E

Affinity Labs Exemplary Infringement Chart for U.S. Patent No. 7,634,228, claim 3

No.	Claim	BlackBerry DTEK50 Exemplary Infringement Support
1.	A media managing method comprising:	BlackBerry directly infringes the claimed media managing method by making, using, selling, or offering for sale the BlackBerry DTEK50. Alternatively, BlackBerry induces its customers to infringe the claimed media managing method. Alternatively, BlackBerry contributorily infringes the claimed media managing method.
1.a	storing a media file in a memory system of a portable hand-held device that is not a conventional personal computer or a laptop computer, wherein the portable hand-held device further has a display and a processor;	The BlackBerry DTEK50 is a portable hand-held device that is not a conventional personal computer or laptop computer. The BlackBerry DTEK50 has a display and a processor. https://us.blackberry.com/smartphones/dtek50-60-by-blackberry/overview

Display	Resolution	**DTEK60**
		534 PPI
		2560 x 1440 Quad HD resc
		24-bit color depth
		DTEK50
		424 PPI
		1920 x 1080 resolution
		24-bit color depth
	Screen Size	**DTEK60**
		5.5" diagonal
		16:9 aspect ratio
		DTEK50
		5.2" diagonal
		16:9 aspect ratio

https://us.blackberry.com/smartphones/dtek50-60-by-blackberry/specifications

Processor	DTEK60
Performance	Qualcomm Snapdragon 820 64-bit Quad-Core (MSM8996 with 64 bit Quad-Core 2+2 Kryo 2.15GHz / 1.6GHz)
	Adreno 530, 624MHz GPU
	DTEK50
	Qualcomm Snapdragon 617 Oct-Core, 64-bit (MSM8952 with 64 bit Quad-core 1.5 GHz Cortex-A53 + Quad-core 1.2 GHz Cortex-A53)
	Adreno 405, 550MHz GPU

https://us.blackberry.com/smartphones/dtek50-60-by-blackberry/specifications

The BlackBerry DTEK50 stores a media file in its memory system.

Memory	DTEK60
	4 GB RAM
	32 GB Flash
	DTEK50
	3 GB RAM
	16 GB Flash
Expandable memory	Expandable memory via hot swappable microSD memory card (Up to 2TB)

https://us.blackberry.com/smartphones/dtek50-60-by-blackberry/specifications

		Play music Type **play**, and then enter a song name, artist name, or album name. DTEK50 User Guide version 6.0, published: 2016-07-19 ("DTEK50 User Guide") at 37. **Multimedia** **Image formats**: BMP, JPG, GIF, PNG, WEBP **Audio & video formats**: 3GP, 3G2, AAC, AVI, ADTS, ASF, AWB, DIVX, FLAC, IMY, MID, MKV, MOV, MP3, MPEG-4, MXMF, OGG, OTA, RTTTL, RTX, WAV, WEBM, WMV, XMF **Audio & video encoding/decoding**: MPEG-4, AAC+, AAC-LC, AMR-NB, AMR-WB, DivX, EVRC, FLAC, H.263, H.264, H265/HEVC, MIDI, MP3, OPUS, PCM, QCELP, VC-1, VORBIS, VP8, VP9, WMA, WMA 9/10, WMA Pro, Xvid, eAAC+ **Streaming protocols**: HTTP(S) Progressive Download, HTTP(S) Live Streaming (HLS) version 3, RTSP (RTP, SDP)

		Apps — **Pre-loaded apps** BlackBerry Applications: BlackBerry® Keyboard, BlackBerry® Hub, BlackBerry Calendar, Contacts by BlackBerry, Notes by BlackBerry, Tasks by BlackBerry, BlackBerry Camera, BBM®, DTEK™ by BlackBerry®, BlackBerry Device Search, BlackBerry Launcher, BlackBerry Services, BlackBerry Help, BlackBerry Password Keeper, Microsoft exFAT Technology for BlackBerry, BlackBerry Content Transfer, Yahoo!® Finance Android Applications: Gmail™, Hangouts™, Google Chrome™, Google Drive™, Google Maps™, YouTube®, Google Play™, Google Photos, Messenger (SMS), Android Device Manager https://us.blackberry.com/smartphones/dtek50-60-by-blackberry/specifications

Insert a media card

If you want more storage for pictures, videos, music, and documents, you can insert a media card (microSD card).

1. Release the tray by pushing the tip of the tool (provided in the box) into the hole on the right side of your device. If you don't have the tool that came with your device, you can also use a paper clip.

2. Pull out the tray completely and set it on a flat surface.
3. Hold the media card so that the metal contacts are facing away from you. Align the notch on the media card with the notch in the larger section of the tray.
4. Put the media card in the tray.

5. Push the tray back into the slot.

DTEK50 User Guide at 7.

1.b	storing a collection of information about the media file in the memory system, wherein the collection includes data representing a name for the media file;	The BlackBerry DTEK50 stores a collection of information about the media file in its memory system, including data representing a name for the media file. The BlackBerry DTEK50 stores metadata associated with a media file in addition to the media file. That metadata includes the name of the media file. 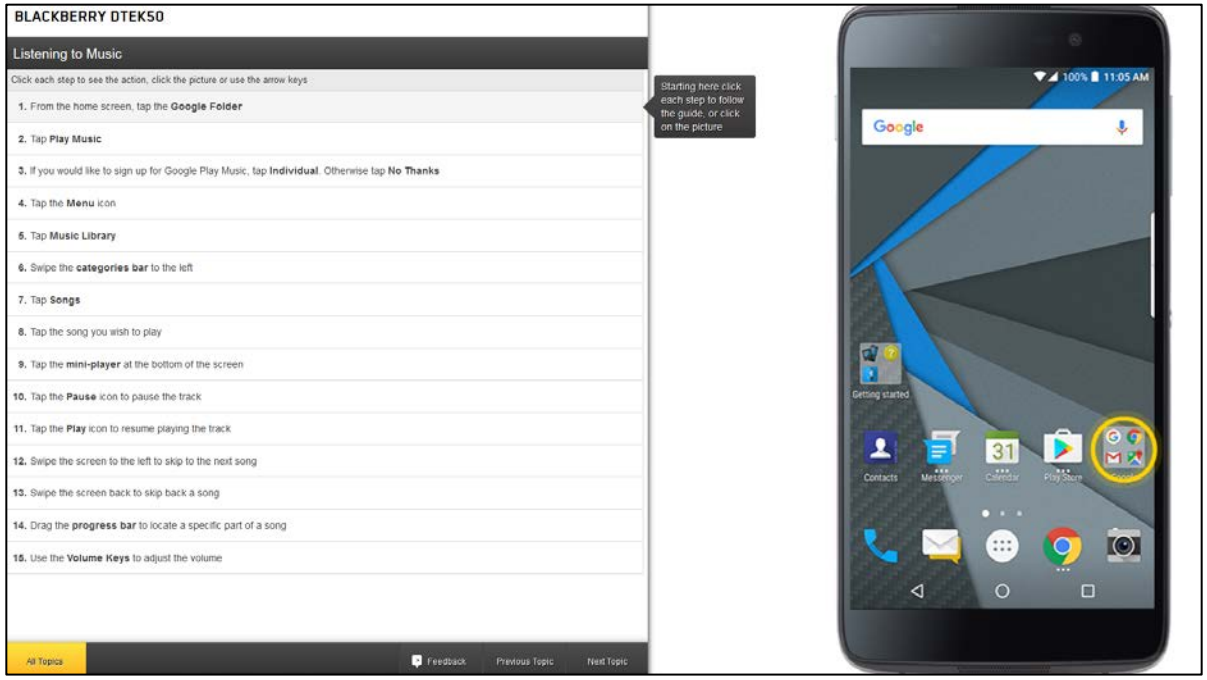 https://videotron.tmtx.ca/en/topic/blackberry_dtek50/listening_to_music.html#step=1

1.c	communicating at least some of the collection from the portable hand-held device to a different electronic device in order to allow a user to view a soft button comprising the name on an associated display of the different electronic device; and	The BlackBerry DTEK50 communicates at least some of the collection of information about the media file in its memory system to a different electronic device, such as a car stereo system, via the USB cable included with the BlackBerry DTEK50 when sold. For example, upon connecting the BlackBerry DTEK50 to a 2014 Ford Focus with Ford SYNC with MyFord Touch, the BlackBerry DTEK50 is displayed as a selectable device on the Ford Focus' display. A user can browse through media files stored on the BlackBerry DTEK50 using the Ford Focus' touchscreen display, whereupon the Ford Focus displays a soft button comprising the name of the media file. 1. Headset jack 2. Notification LED and front flash 3. Front camera 4. Volume up/down key 5. Convenience key 6. Nano SIM card and media card (microSD card) tray 7. USB port 8. Power on/off key DTEK50 User Guide at 5.

		USB Port The ports are located either in the center console or behind a small access door in the instrument panel. To access and play music from your device, press the lower left corner of the touchscreen, and then select the **USB** tab. This feature allows you to plug in media playing devices, memory sticks, flash drives or thumb drives, and charge devices if they support this feature. 2014 Ford Focus User Manual at 396. ***Playing Music from Your Device*** Insert your device and select the **SD Card** or **USB** tab once the system recognizes it. You can then select from the following options: **Browse** allows you to view the contents of the device. It also allows you to search by categories, such as genre, artist or album. If you want to view song information such as Title, Artist, File, Folder, Album, and Genre, touch the on-screen album art. You can also touch **What's Playing** to hear how the system pronounces the current band and song. This can be helpful when using voice commands to make sure the system correctly plays your request. 2014 Ford Focus User Manual at 397.

https://owner.ford.com/how-tos/sync-technology/myford-touch/entertainment/how-to-use-gracenote-to-provide-cover-artwork-for-your-media.html

Supported Media Players, Formats and Metadata Information

SYNC is capable of hosting nearly any digital media player, including iPod®, Zune™, plays from device players, and most USB drives. Supported audio formats include MP3, WMA, WAV and AAC.

It is also able to organize your indexed media from your playing device by metadata tags. Metadata tags, which are descriptive software identifiers embedded in the media files, provide information about the file.

If your indexed media files contain no information embedded in these metadata tags, SYNC may classify the empty metadata tags as **Unknown.**

2014 Ford Focus User Manual at 399.

1.d	thereafter receiving a signal in the portable hand-held device to begin playing the media file by the portable hand-held device in response to a selection of the soft button at the different electronic device; and	The BlackBerry DTEK50 receives a signal to begin playing the media file upon selection of the soft button displayed on the different electronic device. For example, upon selection of a soft button comprising the name of a media file on the Ford Focus' touchscreen display, the BlackBerry DTEK50 begins playing the media file. ***USB Port*** The ports are located either in the center console or behind a small access door in the instrument panel. To access and play music from your device, press the lower left corner of the touchscreen, and then select the **USB** tab. This feature allows you to plug in media playing devices, memory sticks, flash drives or thumb drives, and charge devices if they support this feature. 2014 Ford Focus User Manual at 396. ***Playing Music from Your Device*** Insert your device and select the **SD Card** or **USB** tab once the system recognizes it. You can then select from the following options: **Browse** allows you to view the contents of the device. It also allows you to search by categories, such as genre, artist or album. If you want to view song information such as Title, Artist, File, Folder, Album, and Genre, touch the on-screen album art. You can also touch **What's Playing** to hear how the system pronounces the current band and song. This can be helpful when using voice commands to make sure the system correctly plays your request. 2014 Ford Focus User Manual at 397.

https://owner.ford.com/how-tos/sync-technology/myford-touch/entertainment/how-to-use-gracenote-to-provide-cover-artwork-for-your-media.html

Supported Media Players, Formats and Metadata Information

SYNC is capable of hosting nearly any digital media player, including iPod®, Zune™, plays from device players, and most USB drives. Supported audio formats include MP3, WMA, WAV and AAC.

It is also able to organize your indexed media from your playing device by metadata tags. Metadata tags, which are descriptive software identifiers embedded in the media files, provide information about the file.

If your indexed media files contain no information embedded in these metadata tags, SYNC may classify the empty metadata tags as **Unknown.**

2014 Ford Focus User Manual at 399.

1.e	outputting a played version of the media file across a physical interface of the portable hand-held device while the media file remains stored on the portable hand-held device,	The BlackBerry DTEK50 outputs a played version of the media file across the BlackBerry DTEK50's physical interface. The physical interface is the BlackBerry DTEK50's Micro-USB port and the Micro-USB-to-USB cable included with the BlackBerry DTEK50 when sold. For example, upon selection of a soft button on the Ford Focus' touchscreen display, the BlackBerry DTEK50 outputs a played version of the media file to the Ford Focus via its Micro-USB port and Micro-USB-to-USB cable. When the BlackBerry DTEK50 outputs a played version of the media file, the media file remains stored on the BlackBerry DTEK50. ***USB Port*** The ports are located either in the center console or behind a small access door in the instrument panel. To access and play music from your device, press the lower left corner of the touchscreen, and then select the **USB** tab. This feature allows you to plug in media playing devices, memory sticks, flash drives or thumb drives, and charge devices if they support this feature. 2014 Ford Focus User Manual at 396. ***Playing Music from Your Device*** Insert your device and select the **SD Card** or **USB** tab once the system recognizes it. You can then select from the following options: **Browse** allows you to view the contents of the device. It also allows you to search by categories, such as genre, artist or album. If you want to view song information such as Title, Artist, File, Folder, Album, and Genre, touch the on-screen album art. You can also touch **What's Playing** to hear how the system pronounces the current band and song. This can be helpful when using voice commands to make sure the system correctly plays your request. 2014 Ford Focus User Manual at 397.

https://owner.ford.com/how-tos/sync-technology/myford-touch/entertainment/how-to-use-gracenote-to-provide-cover-artwork-for-your-media.html

Supported Media Players, Formats and Metadata Information

SYNC is capable of hosting nearly any digital media player, including iPod®, Zune™, plays from device players, and most USB drives. Supported audio formats include MP3, WMA, WAV and AAC.

It is also able to organize your indexed media from your playing device by metadata tags. Metadata tags, which are descriptive software identifiers embedded in the media files, provide information about the file.

If your indexed media files contain no information embedded in these metadata tags, SYNC may classify the empty metadata tags as **Unknown.**

2014 Ford Focus User Manual at 399.

		Important Points to Understand and Communicate It's a good idea to share some important points about SYNC with your customers. First, SYNC is secure. No one else can access phonebooks or hack into the system. Also, when SYNC plays music through the vehicle's audio system, it does not transfer the actual music files. Instead, it streams the music directly from the device, which is made possible by a procedure called indexing. So there's no file copying involved. SYNC Handbook at 3. When a cellular phone is connected to SYNC, the system creates a profile within your vehicle that is linked to that cellular phone. This profile is created in order to offer you more cellular features and to operate more efficiently. Among other things, this profile may contain data about your cellular phone book, text messages (read and unread), and call history, including history of calls when your cell phone was not connected to the system. In addition, if you connect a media device, the system creates and retains an index of supported media content. The system also records a short development log of approximately 10 minutes of all recent system activity. The log profile and other system data may be used to improve the system and help diagnose any problems that may occur. The cellular profile, media device index, and development log remain in the vehicle unless you delete them and are generally accessible only in the vehicle when the cellular phone or media player is connected. If you no longer plan to use the system or the vehicle, we recommend you perform a Master Reset to erase all stored information. 2014 Ford Focus User Manual at 377.

<table>
<tr>
<td>1.f</td>
<td>wherein the physical interface is configured to facilitate a communicative coupling of the portable hand-held device and the different electronic device, further wherein the physical interface is not circular and has a width dimension and a length dimension that is longer than the width dimension.</td>
<td>The BlackBerry DTEK50’s Micro-USB port and USB cable are configured to facilitate a communicative coupling of the BlackBerry DTEK50 and a different electronic device with a USB port. The BlackBerry DTEK50’s physical interface is not circular and has a width dimension and a length dimension that is longer than the width dimension.
<table>
<tr><td rowspan="6">COMMS</td><td>WLAN</td><td>Wi-Fi 802.11 a/b/g/n/ac, dual-band, WiFi Direct, hotspot</td></tr>
<tr><td>Bluetooth</td><td>4.2, A2DP, LE, EDR</td></tr>
<tr><td>GPS</td><td>Yes, with A-GPS, GLONASS, BDS</td></tr>
<tr><td>NFC</td><td>Yes</td></tr>
<tr><td>Radio</td><td>FM radio</td></tr>
<tr><td>USB</td><td>microUSB 2.0, USB On-The-Go</td></tr>
</table>
https://www.gsmarena.com/blackberry_dtek50-8229.php</td>
</tr>
</table>

https://www.gsmarena.com/blackberry_dtek50-pictures-8229.php

Transfer files between your computer and device using a USB connection

1. Using a USB cable, connect your device to your computer.
2. On your device, swipe down from the top of the screen and tap the **Connected in charging mode** notification.
3. Tap **Transfer files (MTP)** or **Transfer photos (PTP)**.
4. On your computer, if necessary, enter your device password. Your device and media card appear as drives on your computer.
5. Go to the files or folders that you want to copy.
6. Drag and drop the files or folders into the desired folders.
7. If necessary, before disconnecting your device, on your computer, right-click your device's drive. Click **Eject**.

BlackBerry User Guide at 51.

3.	The method of claim 1,	BlackBerry directly infringes the claimed media managing method by making, using, selling, or offering for sale the BlackBerry DTEK50. Alternatively, Samsung induces its customers to infringe the claimed media managing method. Alternatively, Samsung contributorily infringes the claimed media managing method. Every claim limitation of claim 1 is present in the BlackBerry DTEK50 as described above.
3.a	wherein the different electronic device is an automobile sound system component	The BlackBerry DTEK50 performs the method of claim 1 when communicatively coupled to an automobile sound system via the sound system's USB port. For example, when the BlackBerry DTEK50 is communicatively coupled to the 2014 Ford Focus, the method of claim 1 is performed. ***USB Port*** The ports are located either in the center console or behind a small access door in the instrument panel. To access and play music from your device, press the lower left corner of the touchscreen, and then select the **USB** tab. This feature allows you to plug in media playing devices, memory sticks, flash drives or thumb drives, and charge devices if they support this feature. 2014 Ford Focus User Manual at 396. ***Playing Music from Your Device*** Insert your device and select the **SD Card** or **USB** tab once the system recognizes it. You can then select from the following options:

		Browse allows you to view the contents of the device. It also allows you to search by categories, such as genre, artist or album. If you want to view song information such as Title, Artist, File, Folder, Album, and Genre, touch the on-screen album art. You can also touch **What's Playing** to hear how the system pronounces the current band and song. This can be helpful when using voice commands to make sure the system correctly plays your request. 2014 Ford Focus User Manual at 397.

Exhibit F

Affinity Labs Exemplary Infringement Chart for U.S. Patent No. 8,532,641, claim 4

No.	Claim	BlackBerry DTEK50 Exemplary Infringement Support
1.	A music enabled communication system, comprising:	The BlackBerry DTEK50 is a music enabled communication system.

Multimedia	Image formats	BMP, JPG, GIF, PNG, WEBP
	Audio & video formats	3GP, 3G2, AAC, AVI, ADTS, ASF, AWB, DIVX, FLAC, IMY, MID, MKV, MOV, MP3, MPEG-4, MXMF, OGG, OTA, RTTTL, RTX, WAV, WEBM, WMV, XMF
	Audio & video encoding/decoding	MPEG-4, AAC+, AAC-LC, AMR-NB, AMR-WB, DivX, EVRC, FLAC, H.263, H.264, H265/HEVC, MIDI, MP3, OPUS, PCM, QCELP, VC-1, VORBIS, VP8, VP9, WMA, WMA 9/10, WMA Pro, Xvid, eAAC+
	Streaming protocols	HTTP(S) Progressive Download, HTTP(S) Live Streaming (HLS) version 3, RTSP (RTP, SDP)

		Apps — **Pre-loaded apps** BlackBerry Applications: BlackBerry® Keyboard, BlackBerry® Hub, BlackBerry Calendar, Contacts by BlackBerry, Notes by BlackBerry, Tasks by BlackBerry, BlackBerry Camera, BBM®, DTEK™ by BlackBerry®, BlackBerry Device Search, BlackBerry Launcher, BlackBerry Services, BlackBerry Help, BlackBerry Password Keeper, Microsoft exFAT Technology for BlackBerry, BlackBerry Content Transfer, Yahoo!® Finance Android Applications: Gmail™, Hangouts™, Google Chrome™, Google Drive™, Google Maps™, YouTube®, Google Play™, Google Photos, Messenger (SMS), Android Device Manager https://us.blackberry.com/smartphones/dtek50-60-by-blackberry/specifications

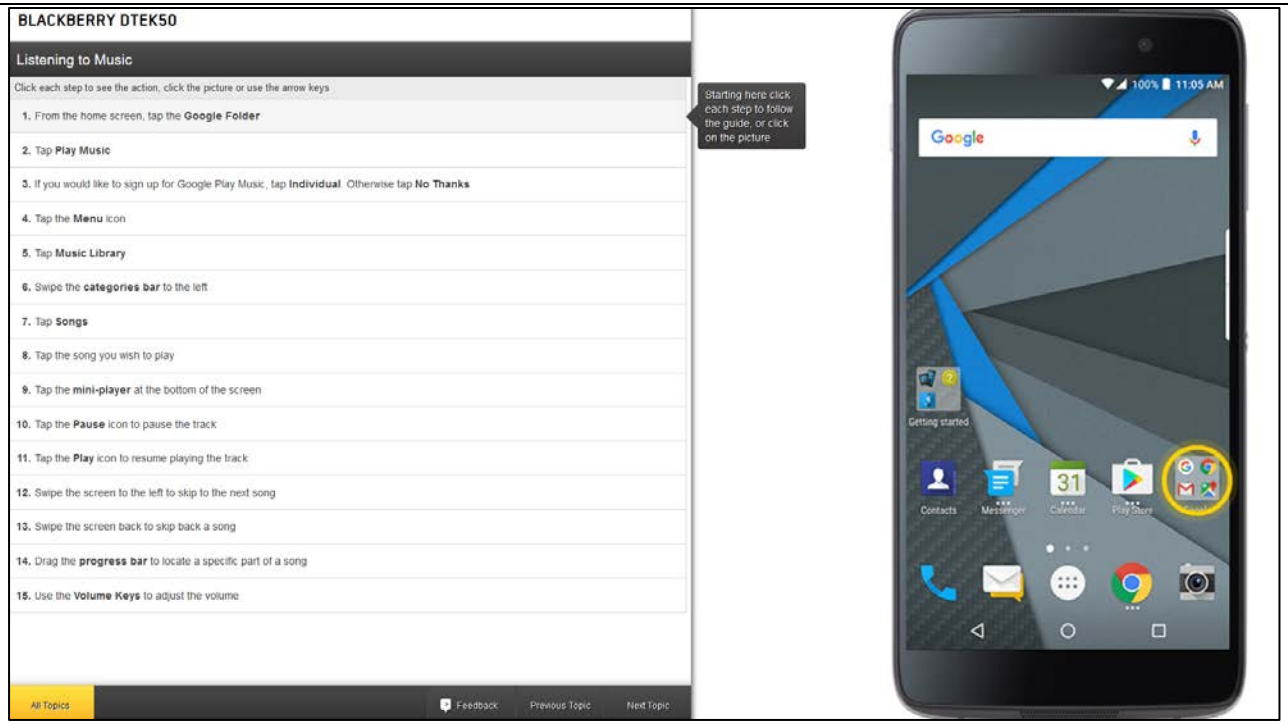

https://videotron.tmtx.ca/en/topic/blackberry_dtek50/listening_to_music.html#step=1

1.a	a wireless telephone device, the device having	The BlackBerry DTEK50 comprises a wireless telephone device. **DTEK50** North America and Latin America: LTE Advanced, with speeds up to 300 Mbps for data downloads FD-LTE 1, 2, 3, 4, 5, 7, 12, 17, 20, 29, 30 (2100/1900/1800/1700/850/2600/700/700/800/700/2300 MHz) HSPA+ 1, 2, 4, 5, 8 (2100/1900/1700/850/900 MHz) Quad band GSM/GPRS/EDGE (850/900/1800/1900 MHz) Europe, Middle East, Africa and Asia Pacific: LTE Advanced, with speeds up to 300 Mbps for data downloads FD-LTE 1, 2, 3, 7, 8, 20, 28A (2100/1900/1800/2600/900/800/700 MHz) TD-LTE 38, 40, 41 (2600/2300/2500 MHz) HSPA+ 1, 2, 5/6, 8 (2100/1900/850/900 MHz) Quad band GSM/GPRS/EDGE (850/900/1800/1900 MHz) https://us.blackberry.com/smartphones/dtek50-60-by-blackberry/specifications

1.b	(1) a display at least partially defining a front surface of the device,	The BlackBerry DTEK50 wireless telephone device has a display at least partially defining a front surface of the device https://us.blackberry.com/smartphones/dtek50-60-by-blackberry/overview

Display	Resolution	**DTEK60**
		534 PPI
		2560 x 1440 Quad HD resc
		24-bit color depth
		DTEK50
		424 PPI
		1920 x 1080 resolution
		24-bit color depth
	Screen Size	**DTEK60**
		5.5" diagonal
		16:9 aspect ratio
		DTEK50
		5.2" diagonal
		16:9 aspect ratio

https://us.blackberry.com/smartphones/dtek50-60-by-blackberry/specifications

1.c	(e) a housing component at least partially defining a back surface of the device,	The BlackBerry DTEK50 wireless telephone device has a housing component at least partially defining a back surface of the device. https://us.blackberry.com/smartphones/dtek50-60-by-blackberry/specifications

1.d	(3) an enclosure located between the front surface and the back surface,	The BlackBerry DTEK50 wireless telephone device has an enclosure located between the front surface and the back surface. https://us.blackberry.com/smartphones/dtek50-60-by-blackberry/overview

1.e	(4) a wireless communication module located within the enclosure,	The BlackBerry DTEK50 wireless telephone device has a wireless communication module located within the enclosure. **DTEK50** North America and Latin America: LTE Advanced, with speeds up to 300 Mbps for data downloads FD-LTE 1, 2, 3, 4, 5, 7, 12, 17, 20, 29, 30 (2100/1900/1800/1700/850/2600/700/700/800/700/2300 MHz) HSPA+ 1, 2, 4, 5, 8 (2100/1900/1700/850/900 MHz) Quad band GSM/GPRS/EDGE (850/900/1800/1900 MHz) Europe, Middle East, Africa and Asia Pacific: LTE Advanced, with speeds up to 300 Mbps for data downloads FD-LTE 1, 2, 3, 7, 8, 20, 28A (2100/1900/1800/2600/900/800/700 MHz) TD-LTE 38, 40, 41 (2600/2300/2500 MHz) HSPA+ 1, 2, 5/6, 8 (2100/1900/850/900 MHz) Quad band GSM/GPRS/EDGE (850/900/1800/1900 MHz) https://us.blackberry.com/smartphones/dtek50-60-by-blackberry/specifications

Wi-Fi®	802.11 b/g/n 2.4 GHz
	802.11 a/n 5GHz
	802.11 ac 5GHz
	4G Mobile Hotspot
	Wi-Fi Direct
FM Radio	Supported (DTEK50)
Bluetooth®	Bluetooth 4.2 Low Energy (LE) and EDR
GPS	Assisted, Autonomous and Simultaneous GPS
	Support for User Plane and Control Plane GPS
	GLONASS, BeiDou
	OTDOA
	Pre-loaded Google Maps
NFC	NFC technology is used to create a connection to share information between your BlackBerry device and other NFC-enabled devices or NFC tags. Features on DTEK50 and DTEK60 that use NFC technology include Android Beam, Tap and Pay, and Tap and Go.

https://us.blackberry.com/smartphones/dtek50-60-by-blackberry/specifications

1.f	(5) a rechargeable power supply located within the enclosure,	The BlackBerry DTEK50 wireless telephone device has a rechargeable power supply located within the enclosure. **Power** — **Battery** **DTEK60** 3000 mAh 4.4V non-removable Lithium Ion battery QC3.0 Enabled **DTEK50** 2610 mAh 4.4V non-removable Lithium Ion battery QC2.0 Enabled – 50% charge in 51 minutes https://us.blackberry.com/smartphones/dtek50-60-by-blackberry/specifications

		Battery life[1] — **DTEK60** Up to 24 hours mixed battery life[1] Up to 26 hours talk time Up to 14 days standby time Up to 88 hours audio playback Up to 17 hours video playback **DTEK50** Up to 17 hours mixed battery life[1] Up to 17 hours talk time Up to 12.8 days standby time Up to 40 hours audio playback Up to 8 hours video playback https://us.blackberry.com/smartphones/dtek50-60-by-blackberry/specifications

Battery and power

Check your battery power level and usage info

You can see which apps and features are using the most battery power and how much battery power you have left.

1. Swipe down from the top of the screen once using two fingers, or twice using one finger.
2. Tap ⚙ > **Battery**.

Charge your device

CAUTION: Use the charging accessory that came with your device, or a charger specifically approved by BlackBerry for use with your device. Other chargers might not provide adequate power and might damage your device.

1. Hold the cable with the BlackBerry logo facing the front of the device, and insert the cable into the port on your device.
2. Plug the charger into a power outlet.

Keeping your battery charged

Your device uses a lithium-ion battery. To maximize your use of this type of battery, when possible, do the following:

- Avoid using your device while it's charging to help it charge faster.
- Do not leave your device plugged into a charger after it has reached a full charge.
- Avoid charging, using, or storing your device in extremely hot or cold places, such as on a vehicle dashboard.
- Avoid leaving your device turned off for an extended periods when the battery power level is low. If you plan to store your device for an extended period, partially charge the battery and put the device in a cool, dry place.

DTEK50 User Guide version 6.0, published: 2016-07-19 ("DTEK50 User Guide") at 70.

1.g	(6) a physical interface having a first and a second conductive path, the physical interface operable to communicate data via the first conductive path and to receive a recharging power for the rechargeable power supply via the second conductive path, and	The BlackBerry DTEK50 wireless telephone device has a physical interface having a first and a second conductive path, the physical interface operable to communicate data via the first conductive path and to receive a recharging power for the rechargeable power supply via the second conductive path. The micro USB port on the BlackBerry DTEK50 is said physical interface. 1. Headset jack 2. Notification LED and front flash 3. Front camera 4. Volume up/down key 5. Convenience key 6. Nano SIM card and media card (microSD card) tray 7. USB port 8. Power on/off key DTEK50 User Guide at 5.

Battery and power

Check your battery power level and usage info

You can see which apps and features are using the most battery power and how much battery power you have left.

1. Swipe down from the top of the screen once using two fingers, or twice using one finger.
2. Tap ⚙ > **Battery**.

Charge your device

CAUTION: Use the charging accessory that came with your device, or a charger specifically approved by BlackBerry for use with your device. Other chargers might not provide adequate power and might damage your device.

1. Hold the cable with the BlackBerry logo facing the front of the device, and insert the cable into the port on your device.
2. Plug the charger into a power outlet.

Keeping your battery charged

Your device uses a lithium-ion battery. To maximize your use of this type of battery, when possible, do the following:

- Avoid using your device while it's charging to help it charge faster.
- Do not leave your device plugged into a charger after it has reached a full charge.
- Avoid charging, using, or storing your device in extremely hot or cold places, such as on a vehicle dashboard.
- Avoid leaving your device turned off for an extended periods when the battery power level is low. If you plan to store your device for an extended period, partially charge the battery and put the device in a cool, dry place.

DTEK50 User Guide at 70.

		DTEK50 Micro USB • USB 2.0 fully supported with standard micro USB 2.0 to USB Type A cable (included in box) https://us.blackberry.com/smartphones/dtek50-60-by-blackberry/specifications

<table>
<tr>
<td>1.h</td>
<td>(7) a memory system, located within the enclosure, and</td>
<td>The BlackBerry DTEK50 wireless telephone device has a memory system, located within the enclosure.
<table>
<tr><td>Memory</td><td>DTEK60</td></tr>
<tr><td></td><td>4 GB RAM</td></tr>
<tr><td></td><td>32 GB Flash</td></tr>
<tr><td></td><td>DTEK50</td></tr>
<tr><td></td><td>3 GB RAM</td></tr>
<tr><td></td><td>16 GB Flash</td></tr>
<tr><td>Expandable memory</td><td>Expandable memory via hot swappable microSD memory card (Up to 2TB)</td></tr>
</table>
https://us.blackberry.com/smartphones/dtek50-60-by-blackberry/specifications</td>
</tr>
</table>

1.i.(a)	a collection of instructions stored in the memory system, the collection of instructions operable when executed to communicate a collection of information about media content available from the wireless telephone device to a recipient device such that the recipient device can use the collection of information to generate a graphical menu comprising a selectable menu item associated with the available media content,	The BlackBerry DTEK50 comprises a collection of instructions stored in the memory system, the collection of instructions operable when executed to communicate a collection of information about media content available from the BlackBerry DTEK50 wireless telephone device to a recipient device such that the recipient device can use the collection of information to generate a graphical menu comprising a selectable menu item associated with the available media content. Bluetooth technology Bluetooth wireless technology allows you to create a direct connection between your device and another Bluetooth enabled device. For example, you can use a Bluetooth connection to play music through a separate speaker, make calls on a headset, share files, or connect to Android Wear™ or a car kit. Before you can connect to a Bluetooth enabled device, you must turn on Bluetooth technology on your device and then pair the two devices. Some paired devices, for example, a car kit, usually connect to your device automatically. DTEK50 User Guide at 59. A seamless and clutter-free way to extend music from your device to your car stereo is to do so wirelessly. Using the Bluetooth® A2DP audio streaming profile supported by most smartphones today, your device can stream music to any car stereo that supports the Bluetooth A2DP profile. http://blogs.blackberry.com/2009/05/wirelessly-stream-mp3s-from-your-blackberry-device-to-car-stereo/

Supported Bluetooth profiles

Your device is a Bluetooth Smart Ready device, and supports the following profiles.

Profile	Description
Advanced Audio Distribution Profile (A2DP)	This profile allows your device to stream audio files to Bluetooth enabled devices that support stereo audio, such as stereo headsets, speakers, and car kits.
Audio/Video Remote Control Profile (AVRCP)	This profile allows you to use the buttons on a Bluetooth enabled device, such as a headset, to perform actions such as adjusting the volume or playing the next or previous media file on your device. This profile also displays information about songs on a Bluetooth enabled device.
Device Identification Profile (DID)	This profile allows Bluetooth enabled devices to access information about your device model to support plug and play features, such as automatically downloading the required drivers.
Hands-Free Profile (HFP)	This profile allows you to connect your device to Bluetooth enabled headsets and car kits to make hands-free calls. This profile supports wideband audio.
Headset Profile (HSP)	This profile allows you to connect your device to a Bluetooth enabled headset.
Human Interface Device Profile (HID)	This profile allows you to connect your device to a Bluetooth enabled device, such as a keyboard or mouse.

DTEK50 User Guide at 61.

Profile	Description
Human Interface Device over Gatt Profile (HOGP)	This profile allows you to connect your device to a Bluetooth Smart device, such as a keyboard or mouse.
Message Access Profile (MAP)	This profile allows a car kit to access text messages (SMS and MMS) on your device and lets you browse and read the text messages. If supported by the car kit, you can also delete, compose, and send text messages from your car.
Object Push Profile (OPP)	This profile allows your device to send files to and receive files from a Bluetooth enabled device.
Personal Area Network Profile (PAN)	This profile allows you to use your device to share your network connection when connected to a Bluetooth enabled computer. This profile also lets you connect your device to another device that is sharing its network connection.
Phone Book Access Profile (PBAP)	This profile allows a Bluetooth enabled car kit to access contact information and recent call history information on your device. This profile allows the car kit to display the contact name for an incoming call.
Serial Port Profile (SPP)	This profile allows you to connect your device to other Bluetooth enabled devices that support the Serial Port Profile for data transfer.
Remote SIM Access Profile (rSAP)	This profile allows a Bluetooth enabled device, such as a car kit, to access the SIM card on your device.

DTEK50 User Guide at 62.

1.i.(b)	to utilize the wireless communication module to stream a signal representing at least a portion of a song to the recipient device using a given asynchronous wireless channel of a localized communications signaling network,	The BlackBerry DTEK50 is configured to utilize the wireless communication module to stream a signal representing at least a portion of a song to the recipient device using a given asynchronous wireless channel of a localized communications signaling network. **Bluetooth technology** Bluetooth wireless technology allows you to create a direct connection between your device and another Bluetooth enabled device. For example, you can use a Bluetooth connection to play music through a separate speaker, make calls on a headset, share files, or connect to Android Wear™ or a car kit. Before you can connect to a Bluetooth enabled device, you must turn on Bluetooth technology on your device and then pair the two devices. Some paired devices, for example, a car kit, usually connect to your device automatically. DTEK50 User Guide at 59. A seamless and clutter-free way to extend music from your device to your car stereo is to do so wirelessly. Using the Bluetooth® A2DP audio streaming profile supported by most smartphones today, your device can stream music to any car stereo that supports the Bluetooth A2DP profile. http://blogs.blackberry.com/2009/05/wirelessly-stream-mp3s-from-your-blackberry-device-to-car-stereo/

Supported Bluetooth profiles

Your device is a Bluetooth Smart Ready device, and supports the following profiles.

Profile	Description
Advanced Audio Distribution Profile (A2DP)	This profile allows your device to stream audio files to Bluetooth enabled devices that support stereo audio, such as stereo headsets, speakers, and car kits.
Audio/Video Remote Control Profile (AVRCP)	This profile allows you to use the buttons on a Bluetooth enabled device, such as a headset, to perform actions such as adjusting the volume or playing the next or previous media file on your device. This profile also displays information about songs on a Bluetooth enabled device.
Device Identification Profile (DID)	This profile allows Bluetooth enabled devices to access information about your device model to support plug and play features, such as automatically downloading the required drivers.
Hands-Free Profile (HFP)	This profile allows you to connect your device to Bluetooth enabled headsets and car kits to make hands-free calls. This profile supports wideband audio.
Headset Profile (HSP)	This profile allows you to connect your device to a Bluetooth enabled headset.
Human Interface Device Profile (HID)	This profile allows you to connect your device to a Bluetooth enabled device, such as a keyboard or mouse.

DTEK50 User Guide at 61.

Profile	Description
Human Interface Device over Gatt Profile (HOGP)	This profile allows you to connect your device to a Bluetooth Smart device, such as a keyboard or mouse.
Message Access Profile (MAP)	This profile allows a car kit to access text messages (SMS and MMS) on your device and lets you browse and read the text messages. If supported by the car kit, you can also delete, compose, and send text messages from your car.
Object Push Profile (OPP)	This profile allows your device to send files to and receive files from a Bluetooth enabled device.
Personal Area Network Profile (PAN)	This profile allows you to use your device to share your network connection when connected to a Bluetooth enabled computer. This profile also lets you connect your device to another device that is sharing its network connection.
Phone Book Access Profile (PBAP)	This profile allows a Bluetooth enabled car kit to access contact information and recent call history information on your device. This profile allows the car kit to display the contact name for an incoming call.
Serial Port Profile (SPP)	This profile allows you to connect your device to other Bluetooth enabled devices that support the Serial Port Profile for data transfer.
Remote SIM Access Profile (rSAP)	This profile allows a Bluetooth enabled device, such as a car kit, to access the SIM card on your device.

DTEK50 User Guide at 62.

At least the Bluetooth A2DP profile uses an asynchronous connection link.

What is A2DP?

A2DP defines the protocols and procedures that allow distribution of high-quality audio content in mono or stereo on asynchronous connectionless (ACL) channels. The audio data is compressed for efficient use of *Bluetooth* technology bandwidth. The term "advanced audio" is distinct from "*Bluetooth* audio," which refers to narrowband voice on synchronous connection-oriented (SCO) channels.

https://developer.bluetooth.org/TechnologyOverview/Pages/ImplementingAdvancedAudioDistributionProfile.aspx

"The Bluetooth specification for the Advanced Audio Distribution Profile explains that A2DP profile "defines the protocols and procedures the realize distribution of audio content of high-quality in mono or stereo on ACL channels." (See e.g. Advanced Audio Distribution Profile Specification,

		Adopted Version 1.0, Rev. 1 at 9; Advanced Audio Distribution Profile Specification, Rev. 12 at 8). The Bluetooth Core Specification explains that ACL is an asynchronous data path. (See e.g. Bluetooth Specification Version 4.1 [Vol.1] at 31; Bluetooth Specification Version 2.0+EDR [Vol. 1] at 32.) It further explains that asynchronous links "provide a method for transporting data that has no time-based characteristics. The data is normally expected to be retransmitted until successfully received, and each data entity can be processed at any time after receipt, without reference to the time of receipt of any previous or successive entity in the stream (providing the ordering of data entities is preserved). (See e.g. Bluetooth Specification Version 4.1 [Vol.1] at 66; Bluetooth Specification Version 2.0+EDR [Vol. 1] at 43.)"

1.i.(c)	to recognize receipt of an incoming telephone call, and	The BlackBerry DTEK50 is configured to recognize receipt of an incoming telephone call. **DTEK50** North America and Latin America: LTE Advanced, with speeds up to 300 Mbps for data downloads FD-LTE 1, 2, 3, 4, 5, 7, 12, 17, 20, 29, 30 (2100/1900/1800/1700/850/2600/700/700/800/700/2300 MHz) HSPA+ 1, 2, 4, 5, 8 (2100/1900/1700/850/900 MHz) Quad band GSM/GPRS/EDGE (850/900/1800/1900 MHz) Europe, Middle East, Africa and Asia Pacific: LTE Advanced, with speeds up to 300 Mbps for data downloads FD-LTE 1, 2, 3, 7, 8, 20, 28A (2100/1900/1800/2600/900/800/700 MHz) TD-LTE 38, 40, 41 (2600/2300/2500 MHz) HSPA+ 1, 2, 5/6, 8 (2100/1900/850/900 MHz) Quad band GSM/GPRS/EDGE (850/900/1800/1900 MHz) https://us.blackberry.com/smartphones/dtek50-60-by-blackberry/specifications

		Receiving calls **Answer or dismiss a call** 1. If your device is locked, touch and hold . • To answer a call, slide your finger until it covers . Release your finger. • To dismiss a call, slide your finger until it covers . Release your finger. 2. If your device is unlocked, in the call notification, tap **Answer** or **Dismiss**. DTEK50 User Guide at 19.

1.i.(d)	to alter an outputting of the signal in connection with recognizing receipt of the incoming telephone call.	Upon information and belief, the BlackBerry DTEK50 is configured to alter an outputting of the signal in connection with recognizing receipt of the incoming telephone call. **Operating system** Android OS **OS** https://us.blackberry.com/smartphones/dtek50-60-by-blackberry/specifications In order to stream music via BT to your car stereo, both devices must the Advanced Audio Distribution Profile or A2DP. This protocol has been widely adapted because of its ability to automatically lower the music volume if there's an incoming call. A2DP requires two pairings for both hands-free calling and for streaming music. While A2DP handles two important tasks, another protocol called Audio/Video Remote Control Profile governs the syncing of playback and metadata so a song's track info, artists, etc are shown in your car stereo's display. https://thedroidguy.com/2018/04/solutions-for-issues-between-your-car-bluetooth-system-and-android-device-110573

2.	The system of claim 1, wherein the wireless communication module is compliant with a Bluetooth standard.	The BlackBerry DTEK50 includes a wireless communication module that is compliant with a Bluetooth standard. **Bluetooth technology** Bluetooth wireless technology allows you to create a direct connection between your device and another Bluetooth enabled device. For example, you can use a Bluetooth connection to play music through a separate speaker, make calls on a headset, share files, or connect to Android Wear™ or a car kit. Before you can connect to a Bluetooth enabled device, you must turn on Bluetooth technology on your device and then pair the two devices. Some paired devices, for example, a car kit, usually connect to your device automatically. DTEK50 User Guide at 59. A seamless and clutter-free way to extend music from your device to your car stereo is to do so wirelessly. Using the Bluetooth® A2DP audio streaming profile supported by most smartphones today, your device can stream music to any car stereo that supports the Bluetooth A2DP profile. http://blogs.blackberry.com/2009/05/wirelessly-stream-mp3s-from-your-blackberry-device-to-car-stereo/

Supported Bluetooth profiles

Your device is a Bluetooth Smart Ready device, and supports the following profiles.

Profile	Description
Advanced Audio Distribution Profile (A2DP)	This profile allows your device to stream audio files to Bluetooth enabled devices that support stereo audio, such as stereo headsets, speakers, and car kits.
Audio/Video Remote Control Profile (AVRCP)	This profile allows you to use the buttons on a Bluetooth enabled device, such as a headset, to perform actions such as adjusting the volume or playing the next or previous media file on your device. This profile also displays information about songs on a Bluetooth enabled device.
Device Identification Profile (DID)	This profile allows Bluetooth enabled devices to access information about your device model to support plug and play features, such as automatically downloading the required drivers.
Hands-Free Profile (HFP)	This profile allows you to connect your device to Bluetooth enabled headsets and car kits to make hands-free calls. This profile supports wideband audio.
Headset Profile (HSP)	This profile allows you to connect your device to a Bluetooth enabled headset.
Human Interface Device Profile (HID)	This profile allows you to connect your device to a Bluetooth enabled device, such as a keyboard or mouse.

DTEK50 User Guide at 61.

Profile	Description
Human Interface Device over Gatt Profile (HOGP)	This profile allows you to connect your device to a Bluetooth Smart device, such as a keyboard or mouse.
Message Access Profile (MAP)	This profile allows a car kit to access text messages (SMS and MMS) on your device and lets you browse and read the text messages. If supported by the car kit, you can also delete, compose, and send text messages from your car.
Object Push Profile (OPP)	This profile allows your device to send files to and receive files from a Bluetooth enabled device.
Personal Area Network Profile (PAN)	This profile allows you to use your device to share your network connection when connected to a Bluetooth enabled computer. This profile also lets you connect your device to another device that is sharing its network connection.
Phone Book Access Profile (PBAP)	This profile allows a Bluetooth enabled car kit to access contact information and recent call history information on your device. This profile allows the car kit to display the contact name for an incoming call.
Serial Port Profile (SPP)	This profile allows you to connect your device to other Bluetooth enabled devices that support the Serial Port Profile for data transfer.
Remote SIM Access Profile (rSAP)	This profile allows a Bluetooth enabled device, such as a car kit, to access the SIM card on your device.

DTEK50 User Guide at 62.

4.	The system of claim 2, wherein the wireless telephone device is a dual mode device operable to receive both a wireless digital signal and a wireless analog signal and the collection of information about media content is configured to be communicated via an interface selected from a group consisting of a channel of the localized communications signaling network and the physical interface.	The BlackBerry DTEK50 is a dual mode device operable to receive both a wireless digital signal (e.g., LTE, etc.) and a wireless analog signal (e.g., FM radio) and the collection of information about media content is configured to be communicated via an interface selected from a group consisting of a channel of the localized communications signaling network (e.g., Bluetooth) and the physical interface (e.g., micro USB port). **DTEK50** North America and Latin America: LTE Advanced, with speeds up to 300 Mbps for data downloads FD-LTE 1, 2, 3, 4, 5, 7, 12, 17, 20, 29, 30 (2100/1900 /1800/1700/850/2600/700/700/800/700/2300 MHz) HSPA+ 1, 2, 4, 5, 8 (2100/1900/1700/850/900 MHz) Quad band GSM/GPRS/EDGE (850/900/1800/1900 MHz) Europe, Middle East, Africa and Asia Pacific: LTE Advanced, with speeds up to 300 Mbps for data downloads FD-LTE 1, 2, 3, 7, 8, 20, 28A (2100/1900/1800/2600 /900/800/700 MHz) TD-LTE 38, 40, 41 (2600/2300/2500 MHz) HSPA+ 1, 2, 5/6, 8 (2100/1900/850/900 MHz) Quad band GSM/GPRS/EDGE (850/900/1800/1900 MHz) https://us.blackberry.com/smartphones/dtek50-60-by-blackberry/specifications

Wi-Fi®	802.11 b/g/n 2.4 GHz
	802.11 a/n 5GHz
	802.11 ac 5GHz
	4G Mobile Hotspot
	Wi-Fi Direct
FM Radio	Supported (DTEK50)
Bluetooth®	Bluetooth 4.2 Low Energy (LE) and EDR
GPS	Assisted, Autonomous and Simultaneous GPS
	Support for User Plane and Control Plane GPS
	GLONASS, BeiDou
	OTDOA
	Pre-loaded Google Maps
NFC	NFC technology is used to create a connection to share information between your BlackBerry device and other NFC-enabled devices or NFC tags. Features on DTEK50 and DTEK60 that use NFC technology include Android Beam, Tap and Pay, and Tap and Go.

https://us.blackberry.com/smartphones/dtek50-60-by-blackberry/specifications

		Bluetooth technology Bluetooth wireless technology allows you to create a direct connection between your device and another Bluetooth enabled device. For example, you can use a Bluetooth connection to play music through a separate speaker, make calls on a headset, share files, or connect to Android Wear™ or a car kit. Before you can connect to a Bluetooth enabled device, you must turn on Bluetooth technology on your device and then pair the two devices. Some paired devices, for example, a car kit, usually connect to your device automatically. DTEK50 User Guide at 59. A seamless and clutter-free way to extend music from your device to your car stereo is to do so wirelessly. Using the Bluetooth® A2DP audio streaming profile supported by most smartphones today, your device can stream music to any car stereo that supports the Bluetooth A2DP profile. http://blogs.blackberry.com/2009/05/wirelessly-stream-mp3s-from-your-blackberry-device-to-car-stereo/

Supported Bluetooth profiles

Your device is a Bluetooth Smart Ready device, and supports the following profiles.

Profile	Description
Advanced Audio Distribution Profile (A2DP)	This profile allows your device to stream audio files to Bluetooth enabled devices that support stereo audio, such as stereo headsets, speakers, and car kits.
Audio/Video Remote Control Profile (AVRCP)	This profile allows you to use the buttons on a Bluetooth enabled device, such as a headset, to perform actions such as adjusting the volume or playing the next or previous media file on your device. This profile also displays information about songs on a Bluetooth enabled device.
Device Identification Profile (DID)	This profile allows Bluetooth enabled devices to access information about your device model to support plug and play features, such as automatically downloading the required drivers.
Hands-Free Profile (HFP)	This profile allows you to connect your device to Bluetooth enabled headsets and car kits to make hands-free calls. This profile supports wideband audio.
Headset Profile (HSP)	This profile allows you to connect your device to a Bluetooth enabled headset.
Human Interface Device Profile (HID)	This profile allows you to connect your device to a Bluetooth enabled device, such as a keyboard or mouse.

DTEK50 User Guide at 61.

Profile	Description
Human Interface Device over Gatt Profile (HOGP)	This profile allows you to connect your device to a Bluetooth Smart device, such as a keyboard or mouse.
Message Access Profile (MAP)	This profile allows a car kit to access text messages (SMS and MMS) on your device and lets you browse and read the text messages. If supported by the car kit, you can also delete, compose, and send text messages from your car.
Object Push Profile (OPP)	This profile allows your device to send files to and receive files from a Bluetooth enabled device.
Personal Area Network Profile (PAN)	This profile allows you to use your device to share your network connection when connected to a Bluetooth enabled computer. This profile also lets you connect your device to another device that is sharing its network connection.
Phone Book Access Profile (PBAP)	This profile allows a Bluetooth enabled car kit to access contact information and recent call history information on your device. This profile allows the car kit to display the contact name for an incoming call.
Serial Port Profile (SPP)	This profile allows you to connect your device to other Bluetooth enabled devices that support the Serial Port Profile for data transfer.
Remote SIM Access Profile (rSAP)	This profile allows a Bluetooth enabled device, such as a car kit, to access the SIM card on your device.

DTEK50 User Guide at 62.

1. Headset jack
2. Notification LED and front flash
3. Front camera
4. Volume up/down key
5. Convenience key
6. Nano SIM card and media card (microSD card) tray
7. USB port
8. Power on/off key

DTEK50 User Guide at 5.