IN THE UNITED STATES DISTRICT COURT
FOR THE DISTRICT OF DELAWARE

KARAMELION LLC, Plaintiff, v. **SCOUT SECURITY, INC.,** Defendant.	CASE NO. _____ **JURY TRIAL DEMANDED** **PATENT CASE**

ORIGINAL COMPLAINT FOR PATENT INFRINGEMENT

Plaintiff Karamelion LLC, files this Original Complaint for Patent Infringement against Scout Security, Inc., and would respectfully show the Court as follows:

I. THE PARTIES

1. Plaintiff Karamelion LLC ("Karamelion" or "Plaintiff") is a Texas limited liability company with its principal place of business at 5570 FM 423, Suite 250 #2022, Frisco, TX 75034.

2. On information and belief, Defendant Scout Security, Inc. ("Defendant") is a corporation organized and existing under the laws of Delaware, with a place of business at 210 N Racine, Unit 2M, Chicago, IL 60607. Defendant has a registered agent at Corporation Service Company, 251 Little Falls Drive Wilmington, DE 19808.

II. JURISDICTION AND VENUE

3. This action arises under the patent laws of the United States, Title 35 of the United States Code. This Court has subject matter jurisdiction of such action under 28 U.S.C. §§ 1331 and 1338(a).

4. On information and belief, Defendant is subject to this Court's specific and general personal jurisdiction, pursuant to due process and the Delaware Long-Arm Statute, due

at least to its business in this forum, including at least a portion of the infringements alleged herein. Furthermore, Defendant is subject to this Court's specific and general personal jurisdiction because Defendant is a Delaware corporation.

5. Without limitation, on information and belief, within this state, Defendant has used the patented inventions thereby committing, and continuing to commit, acts of patent infringement alleged herein. In addition, on information and belief, Defendant has derived revenues from its infringing acts occurring within Delaware. Further, on information and belief, Defendant is subject to the Court's general jurisdiction, including from regularly doing or soliciting business, engaging in other persistent courses of conduct, and deriving substantial revenue from goods and services provided to persons or entities in Delaware. Further, on information and belief, Defendant is subject to the Court's personal jurisdiction at least due to its sale of products and/or services within Delaware. Defendant has committed such purposeful acts and/or transactions in Delaware such that it reasonably should know and expect that it could be haled into this Court as a consequence of such activity.

6. Venue is proper in this district under 28 U.S.C. § 1400(b). On information and belief, Defendant was formed in Delaware. Under the patent venue analysis, Defendant resides only in this District. On information and belief, from and within this District Defendant has committed at least a portion of the infringements at issue in this case.

7. For these reasons, personal jurisdiction exists and venue is proper in this Court under 28 U.S.C. § 1400(b).

III. COUNT I
(PATENT INFRINGEMENT OF UNITED STATES PATENT NO. 6,275,166)

8. Plaintiff incorporates the above paragraphs herein by reference.

9. On August 14, 2001, United States Patent No. 6,275,166 ("the '166 Patent") was duly and legally issued by the United States Patent and Trademark Office. The application leading to the '166 patent was filed on January 19, 1999. (Ex. A at cover). The '166 Patent is titled "RF Remote Appliance Control/Monitoring System." A true and correct copy of the '166 Patent is attached hereto as Exhibit A and incorporated herein by reference.

10. Plaintiff is the assignee of all right, title and interest in the '166 patent, including all rights to enforce and prosecute actions for infringement and to collect damages for all relevant times against infringers of the '166 Patent. Accordingly, Plaintiff possesses the exclusive right and standing to prosecute the present action for infringement of the '166 Patent by Defendant.

11. The invention in the '166 Patent relates to control and monitoring of distributed systems in buildings such as systems for controlling and monitoring heating, air conditioning, lighting, security, occupancy, and usage of distributed facilities. (Ex. A at col. 1:5-12). Control of such distributed systems in the prior art commonly used computer networks and business software. (*Id.* at col. 1:11-13). A major difficult with such systems was the expense of wiring inter-connections between elements of the system, particularly when there are additions or changes to be made in the system. (*Id.* at col. 1:14-18). Prior art attempts to reduce the expense of the systems included using efficient network products such as using a widely known Ethernet standard, using AC power wiring to transmit RF communications to remove controllers, and using a combination of wired and wireless communications. (*Id.* at col. 1:18-27).

12. However, these centralized wireless control systems for building appliances have not been widely used mainly because systems that have a sufficient communication ranges are normally subject to regulations and licensing requirements that are prohibitively expensive. (*Id.*

at col. 1:28-32). Also, systems that are powerful enough to be used in widely distributed installations are unnecessarily expensive to be used in smaller installations. (*Id.* at col. 1:32-34). With respect to wireless communication, there is limited availability of RF carrier frequencies, and potential interference with other nearby systems that might be operating in similar frequencies. (*Id.* at col. 1:34-37). Because of the continued deficiencies of the prior art solutions, there was a need for a wireless appliance control system that overcomes the disadvantages of the prior art solutions. (*Id.* at col. 1:38-39).

13. The inventors developed an invention that "meets this need by providing a wireless configuration that uses a distributed array of low power (short range) wireless controllers that are also functional as relay units for communicating with a headend control computer at long range." (*Id.* at col. 1:42-46).

14. The '166 patent discloses exemplary embodiments of the claimed invention. The claimed invention is typically implemented in a building or location that has an appliance control/monitoring system. (*Id.* at col. 3:64 – col. 4:7). For example, the following figure is of a building (11) having a distributed array of appliance management stations (12) that wirelessly communicate with a headend control station (14) (*Id.* at col. 3:66 – col. 4:4):

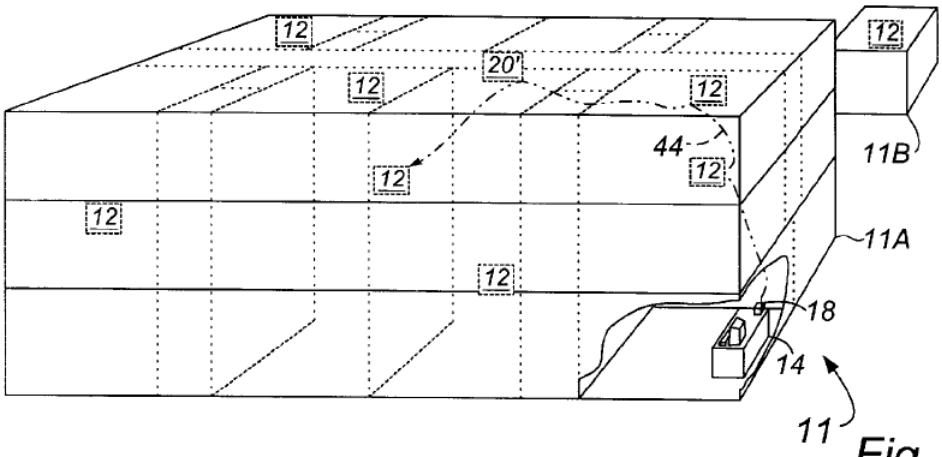

Fig. 2.

The typical appliances connected to the appliance control/monitoring system are heating, ventilation and air conditioning units (HVAC), temperature sensors, motion detectors, and audio/video devices. (*Id.* at col. 1:5-9, col. 4:54-61). The appliances are interfaced with relay units that have appliance interface/controllers to communicate with the appliance and satellite radio transceivers. (*Id.* at col. 4:62-66). The satellite radio transceivers of the relay units are operable at low power and have a limited wireless communications range that reaches only a portion of the building or location. (*Id.* at col. 4:62-66). In order to for the relay units to communicate beyond their limited wireless range, they communicate by relaying transmissions using intermediate relay units to the intended destination. (*Id.* at col. 4:66 – col. 5:1). An exemplary simplified circuit block diagram of the appliance controller portion of the relay unit, including a satellite radio transceiver, is shown in Figure 3 of the '166 patent:

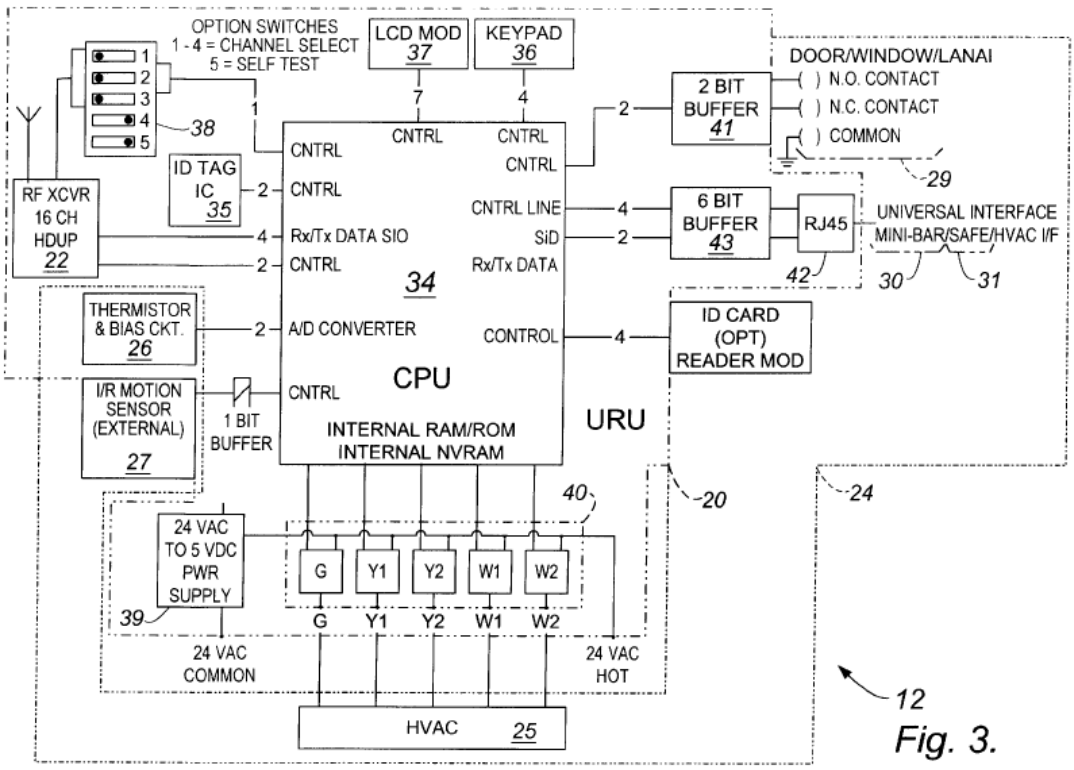

(Ex. A). The microprocessor (34) is connected between a satellite transceiver (22) and the appliance device (24). (*Id.* at col. 5:13-15).

15. The '188 patent includes a diagram of an exemplary command protocol (Fig. 4) and exemplary return protocol (Fig. 5):

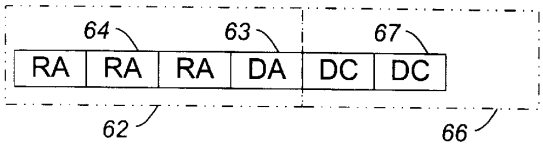

Fig. 4. 60

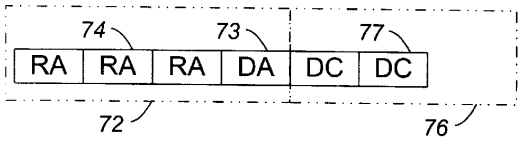

Fig. 5. 70

(Ex. A). The exemplary command protocol includes an address section (62) that includes a destination address (63) and may include relay addresses (64) so that the message may be relayed to another device. (*Id.* at col. 7:40-43). Following the address section is a command section (66) that includes device commands (67) that are directed to particular appliance devices at the destination relay unit. (*Id.* at col. 7:43-47). The exemplary return protocol includes a counterpart of the address section (72) that includes a destination address (73) and relay addresses (74). (*Id.* at col. 7:48-51). Following the address section of the return protocol is a feedback section (76) that include feedback elements (77) that are responsive to the appliance devices at the destination relay unit. (*Id.* at col. 7:51-55).

16. A pictorial diagram showing an exemplary process for using a portion of the system is shown in Figure 6 of the '166 patent:

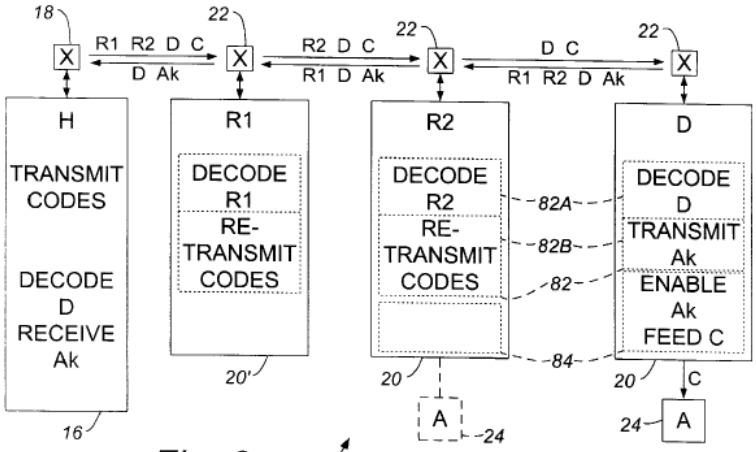

Fig. 6. 80

(Ex. A). A transmitter in the headend computer (H) signals the addresses of relay units (20), with one of the addresses being the destination address (D), and the other addresses include a first and second relay address (R1, R2), and a control signal (C) for appliance (A) being interfaced to the destination relay unit (D). (*Id.* at col. 7:56-65). The first relay unit decodes the first relay address, and transmits the control signal, the second relay address and the destination address from the first relay unit; the same steps occur at the second relay unit but with respect to decoding the second relay address. (*Id.* at col. 7:65 – col. 8:1). The destination relay unit decodes the destination address and feeds the control signal to the appliance; then the destination unit transmits the destination address, the first and second relay addresses, and an acknowledgement signal (Ak). (*Id.* at col. 8:2-6). The second relay unit decodes the second relay address, and then transmits the acknowledgement signal (Ak), the first relay address, and the destination address; the same steps occur at the first relay unit but with respect to decoding the first relay address. (*Id.* at col. 8:6-9). The headend computer decodes the destination address and receives the acknowledgement signal (Ak). (*Id.* at col. 8:9-11). The decoding and transmitting in the relay units are implemented by first and second instruction portions (82A, 82B), respectively, of the relay program (82). (*Id.* at col. 8:11-14). The feeding of the control signal by the relay unit to the appliance and generating the acknowledgement signal occurs in the appliance program (84). (*Id.* at col. 8:14-16). Both the relay program and appliance program are in the microcomputer memory of each relay unit. (*Id.* at col. 8:16-18).

17. As explained during the prosecution history, the prior art did not teach a relay unit being an appliance controller that communicated with a headend computer using at least two other relay units. The invention therefore overcame the prior art, which were excessively

expensive, had insufficient bandwidth, were ineffective in serving multiple devices, were unreliable, and were difficult to use. (Ex. B at col. 1:43-51).

18. **Direct Infringement.** Upon information and belief, Defendant has been directly infringing at least claim 1 of the '166 patent in Delaware, and elsewhere in the United States, by performing actions comprising making, using, selling, and/or offering for sale an appliance controller for a distributed appliance system having a headend computer, a multiplicity of appliances, and a plurality of relay units that satisfies the limitations of at least claim 1, including without limitation the Scout Hub, Glass Break Sensor, Smoke CO Detector, and other Z-wave supported devices ("Accused Instrumentality").

19. Accused Instrumentality provides an appliance controller (*e.g.*, Glass Break Sensor, Smoke Co Detector) for a distributed appliance system (*e.g.*, Z-Wave network) having a headend computer (*e.g.*, primary controller, in this case a controller (*e.g.,* Scout Hub) for the network including the Glass Break Sensor, Smoke CO Detector, and other Z-Wave supported devices), a multiplicity of appliances (*e.g.*, appliances such sensors), and a plurality of relay units (*e.g.*, repeaters), one of the relay units being the appliance controller (*e.g.*, Z-Wave node).

20. Each Accused Instrumentality is an appliance controller comprising a low power satellite radio transceiver (*e.g.*, radio frequency transceivers within the various Z-Wave devices) having a range being less than a distance to at least some of the appliances.

(https://www.scoutalarm.com/products/scout-hub?variant=12783050489898).[1]

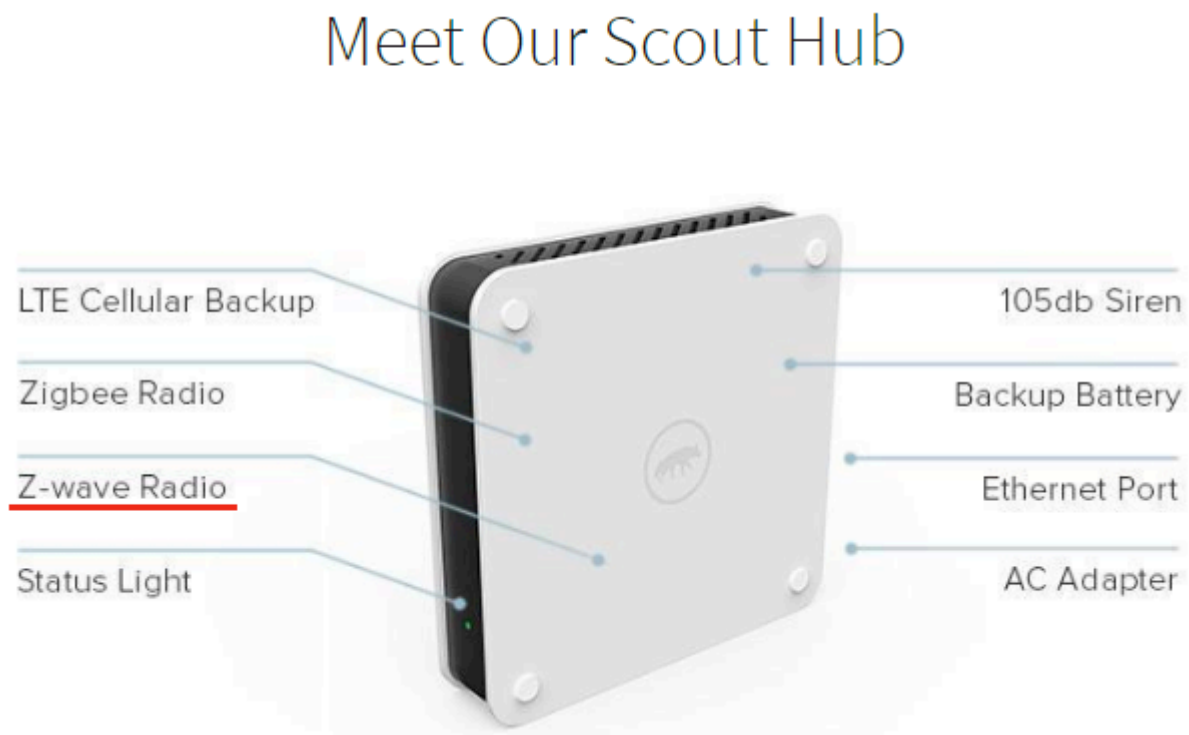

(*Id.*).

[1] Red boxes and lines are added unless otherwise noted.

Glass Break Sensor

Monitors your home for the sound and vibration of breaking glass. Great for mounting near sliding glass doors and large windows. This Z-wave device installs in minutes, senses glass breaking up to 15 ft. away and has dual-shatter recognition technology.

(https://www.scoutalarm.com/collections/all).

Meet Our Smoke Co Detector

(https://www.scoutalarm.com/products/smoke-co-detector?variant=12783049375786).

The Z-Wave Protocol handles transmissions to destinations all over the network. If necessary, other nodes are used as repeaters. This is called routing.

During bootstrapping, the Primary Controller asks the new node to discover its neighbors. Thanks to the neighbor nodes information, the Primary Controller builds a network map and knows the different possible routes to reach a node.

When using repeaters, the Sending node includes the route information in the frame. Each repeater parses the routing information and forwards the frame accordingly.

Sigma Designs Inc. Z-Wave Networking Basics Page 5 of 7

APL13031-2 Z-Wave Networking Basics

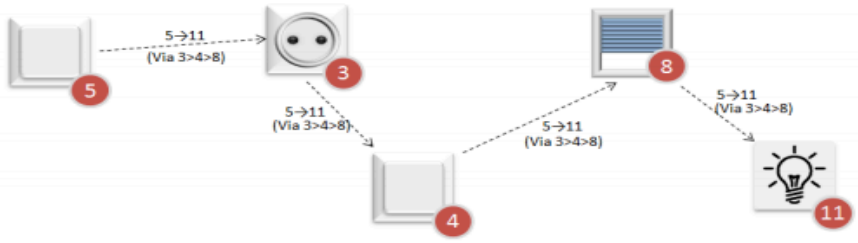

Example 4: Routing via repeaters

Routing may also be used during inclusion if a node is not within direct range of the Primary Controller.

(http://zwavepublic.com/sites/default/files/APL13031-2%20-%20Z-Wave%20Networking%20Basics.pdf).

Z-Wave Alliance Recommendation ZAD12837-1

Z-Wave Transceivers – Specification of Spectrum Related Components

(2014)

Scope

This Recommendation provides guidelines pertaining to spectrum usage of the short range narrowband digital radiocommunication transceivers complying with ITU-T Recommendation G.9959. ITU-T Recommendation G.9959 contains the system architecture, physical layer (PHY) and medium access control layer (MAC) specifications for G.9959 compliant transceivers.

References

[1] Recommendation ITU-T G.9959, *Short range narrowband digital radiocommunication transceivers – PHY & MAC layer specifications*

Definitions

This Recommendation uses the following definitions:

Channel: a transmission path between nodes. One channel is considered to be one transmission path. Logically a channel is an instance of the communications medium used for the purpose of passing data between two or more nodes.

Node: any network device that contains a G.9959 transceiver. In the context of this Recommendation, use of the term 'node' without a qualifier means 'G.9959 node'.

(https://z-wavealliance.org/wp-content/uploads/2015/02/ZAD12837-1.pdf).

21. Each Accused Instrumentality has an appliance interface for communicating with the at least one local appliance (*e.g.*, an interface which connects and makes possible the transmission of a signal to the sensor). For example, the device communicated with the sensors determine the status of the sensor. (*Supra* ¶20).

22. Each Accused Instrumentality has a microcomputer connected between the satellite radio transceiver (*e.g.*, Z-Wave transceiver) and the appliance interface and having first program instructions for controlling the satellite transceiver (*e.g.*, the microcontroller controls the transmission of signals from the transceiver to the other Z-Wave nodes in the network), and second program instructions for directing communication between the satellite transceiver and the appliance interface (*e.g.*, the microcontroller within the Z-Wave device enables the command

received from the primary controller by the Z-Wave transceiver to be communicated to the appliance interface of the device so that the intended action can be executed such as monitor the status of a sensor). (*Supra* ¶20; https://standards.ieee.org/getieee802/download/802.15.4-2011.pdf).

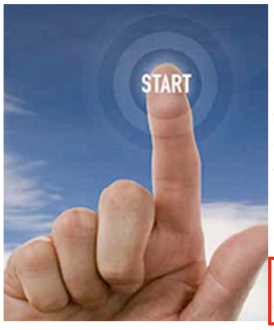

Z-Wave's physical and media access layers (PHY/MAC) have been ratified by the International Telecommunication Union (ITU) as the international standard (G.9959). The Z-Wave Standard is administered by the Z-Wave Alliance which serves as the Standards Development Organization (SDO) for Z-Wave.

Together, Sigma Designs, the Z-Wave Alliance and the over 450 international companies that use Z-Wave technology in their products and services present the largest ecosystem of interoperable wireless control products in the world. The Z-Wave mesh communication protocol stack is embedded in the available chips and modules, and is accessed through a complete set of APIs. Z-Wave chips and modules provide Flash or OTP memory options for the manufacturer or OEM's application software.

For many products, the Z-Wave chip or module, with its on-board micro-controller, is all that is needed for a complete Z-Wave solution. For companies that choose chip-based over module-based solutions, a range of blueprints of the PCB circuitry surrounding the Z-Wave Single Chip is offered, including antenna circuitry and filters. Sigma Designs also licenses reference designs, stack software and APIs to chip manufacturers that are interested in entering the wireless control space, providing Z-Wave porting services that assure quality and accelerate product development. Z-Wave's industry-leading device specifications are available royalty free, based on a RAND model. The Z-Wave certification program ensures interoperability between all products.

(https://Z-Wavealliance.org/Z-Wave-oems-developers/).

The Version Command Class, version 2 is extended to report the version of various firmware images such as a host processor firmware, etc. in addition to the firmware image running in the Z-Wave chip.

As an example, one may construct a product comprising a Z-Wave chip and a secondary host processor that maintains a security certificate. With Firmware Update Meta Data Command Class, version 3 the Z-Wave chip, the host processor and the security certificate may all be updated via individual firmware IDs. Version 2 of the Version Command Class (this Command Class) allows a controlling node to request the corresponding version information for each firmware ID.

Commands not mentioned here remain the same as specified for Version Command Class, version 1.

4.20.1 Version Report Command

This command is used to report the library type, protocol version and application version from a node.

Version 2 of this command renames the fields Application Version and Application Sub Version to Firmware 0 Version and Firmware 0 Sub Version. The use remains the same.

A node MUST advertise the version of all firmware images which can be updated via the Firmware Update Command Class.

A one-chip system MUST comply with the following:

- The Firmware 0 Version MUST reflect the complete firmware implementing the Z-Wave protocol stack as well as the Z-Wave application.

A multi-processor system MUST comply with the following:

- The Firmware 0 Version MUST reflect the firmware implementing the Z-Wave protocol stack and the inter-chip interface module that enables the Z-Wave application to run in the host processor. Another firmware number (e.g. Firmware 1) version MUST reflect the Z-Wave application that runs in the host processor. Any firmware number larger than 0 MAY be used for this purpose.

(http://zwavepublic.com/sites/default/files/command_class_specs_2017A/SDS13782-4%20Z-

Wave%20Management%20Command%20Class%20Specification.pdf).

23. Each Accused Instrumentality provides first program instructions including detecting communications directed by the headend computer (*e.g.*, primary controller) relative to the same appliance controller (*e.g.*, targeted Z-Wave node), signaling receipt of the directed communications (*e.g.*, sending acknowledgement signal through the Z-Wave transceiver), and directing communications to the headend computer relative to the same appliance controller (*e.g.*, sending status of an appliance or signal from a connected sensor). For example, a primary controller can send/receive messages to program various connected Z-Wave devices. (*Supra* ¶20; https://standards.ieee.org/getieee802/download/802.15.4-2011.pdf).

24. Each Accused Instrumentality has a second program instructions including detecting relay communications directed between the headend computer and a different relay unit, transmitting the relay communications, detecting a reply communication from the different relay unit, and transmitting the reply communication to the headend computer, wherein at least some of the relay units communicate with the headend computer by relay communications using at least two others of the relay units (*e.g.*, a Z-Wave node detects messages from primary controller and checks whether message is intended for itself, if not, then acting as a repeater, transmits it to next intended device in the route; the Z-Wave node detects messages from another Z-Wave node and forwards it to primary controller). The Accused Instrumentality work on Z-Wave technology which uses mesh network and would communicate with the headend computer (*e.g.*, Scout Hub) by relay communications using at least two others of the relay units (*e.g.*, repeaters). (*Supra* ¶20; https://standards.ieee.org/getieee802/download/802.15.4-2011.pdf; https://www.zwaveproducts.com/learn/ask-an-expert/glossary/mesh-network;

http://docslide.us/documents/Z-Wave-technical-basics-small.html;

http://www.zwaveproducts.com/learn/Z-Wave).

Each frame carries a checksum. A Receiving node can verify the frame integrity thanks to this checksum. Invalid frames are discarded.

A Receiving node returns an Ack message in order to confirm that the frame has been received. If no Ack is received by the Sending node, it must assume that the transmission failed. The Sending node will then retransmit the same message until it gets feedback from the Receiving node. After three unsuccessful transmissions, the Sending node will consider the link to be down.

Ack messages are sent to confirm the frame integrity and do not imply that the Receiving node has understood or executed the command.

Local differences in wireless link quality may cause a Z-Wave network analyzer (known as a Zniffer) not to see the same transmissions as nodes participating in a transmission.

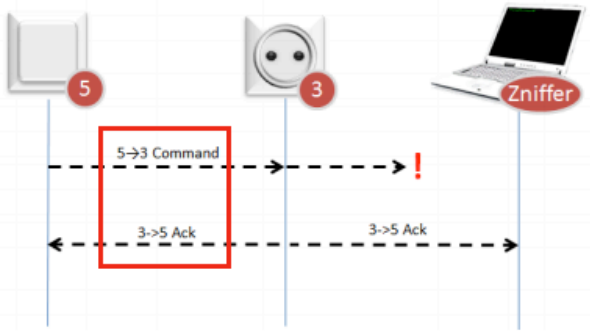

Example 3: Network analysis issues

(http://zwavepublic.com/sites/default/files/APL13031-2%20-%20Z-Wave%20Networking%20Basics.pdf).

This command is used to set the network route to use when sending commands to the specified NodeID.

The use of this command is NOT RECOMMENDED.

7	6	5	4	3	2	1	0
COMMAND_CLASS = NETWORK_MANAGEMENT_INSTALLATION_MAINTENANCE							
COMMAND = PRIORITY_ROUTE_SET							
NodeID							
Repeater 1 [First repeater]							
Repeater 2							
Repeater 3							
Repeater 4 [Last repeater]							
Speed							

NodeID (1 byte)

This field is used to specify the destination NodeID for which a last working route MUST be set.

Repeater (4 bytes)

This field is used to specify repeaters for the route. Each byte represents a NodeID and the first field (Repeater 1) is the first repeater of the route.

The value 0x00 MUST indicate that the byte does not represent a repeater. If the route is shorter than four repeaters, unused repeaters fields MUST be set to 0x00. If Repeater 1 is set to 0x00, it means that the Last Working Route is direct (nodes are within direct reach).

(http://zwavepublic.com/sites/default/files/command_class_specs_2017A/SDS13784-4%20Z-Wave%20Network-Protocol%20Command%20Class%20Specification.pdf).

The Z-Wave Protocol handles transmissions to destinations all over the network. If necessary, other nodes are used as repeaters. This is called routing.

During bootstrapping, the Primary Controller asks the new node to discover its neighbors. Thanks to the neighbor nodes information, the Primary Controller builds a network map and knows the different possible routes to reach a node.

When using repeaters, the Sending node includes the route information in the frame. Each repeater parses the routing information and forwards the frame accordingly.

Sigma Designs Inc. Z-Wave Networking Basics Page 5 of 7

APL13031-2 Z-Wave Networking Basics

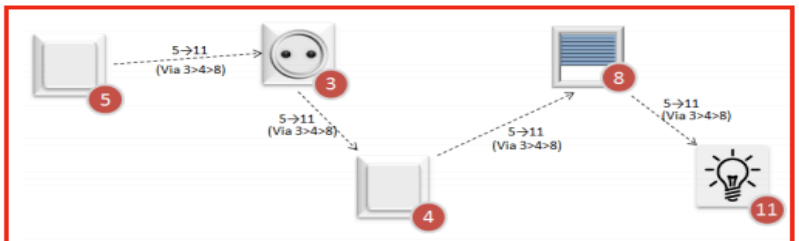

Example 4: Routing via repeaters

Routing may also be used during inclusion if a node is not within direct range of the Primary Controller.

(http://zwavepublic.com/sites/default/files/APL13031-2%20-%20Z-

Wave%20Networking%20Basics.pdf).

III. COUNT II
(PATENT INFRINGEMENT OF UNITED STATES PATENT NO. 6,873,245)

25. Plaintiff incorporates the above paragraphs herein by reference.

26. On March 29, 2005, United States Patent No. 6,873,245 ("the '245 Patent") was duly and legally issued by the United States Patent and Trademark Office. The application leading to the '245 patent was filed on August 14, 2001, and is a continuation-in-part of the application leading to the '166 Patent. (Ex. B at cover). The '245 Patent is titled "RF Remote Appliance Control/Monitoring System." A true and correct copy of the '245 Patent is attached hereto as Exhibit B and incorporated herein by reference.

27. Plaintiff is the assignee of all right, title and interest in the '245 patent, including all rights to enforce and prosecute actions for infringement and to collect damages for all relevant times against infringers of the '245 Patent. Accordingly, Plaintiff possesses the exclusive right and standing to prosecute the present action for infringement of the '245 Patent by Defendant.

28. Because the '245 patent is a continuation in part of the application leading to the '166 patent, the '245 patent has a substantially overlapping specification and the background regarding the '166 patent is equally applicable and is incorporated by reference with respect to the '245 patent. (*Supra* ¶¶11-17).

29. **Direct Infringement.** Upon information and belief, Defendant has been directly infringing at least claim 1 of the '245 patent in Delaware, and elsewhere in the United States, by performing actions comprising making, using, selling, and/or offering for sale an appliance controller for a distributed appliance systems having a multiplicity of appliances, and a plurality of relay units, that satisfies the limitations of at least claim 1, including without limitation the

Scout Hub, Glass Break Sensor, Smoke CO Detector, and other Z-wave supported devices ("Accused Instrumentality").

30. Each Accused Instrumentality provides an appliance controller (*e.g.*, Z-wave Glass Break Sensor, Smoke CO Detector) for a distributed appliance system (*e.g.*, Z-Wave network) having a multiplicity of appliances (*e.g.*, sensors), and a plurality of relay units (*e.g.*, repeaters), one of the relay units being the appliance controller (*e.g.*, a Z-Wave Controller). (*Supra* ¶20; http://zwavepublic.com/sites/default/files/command_class_specs_2017A/SDS13782-4%20Z-Wave%20Management%20Command%20Class%20Specification.pdf; http://zwavepublic.com/sites/default/files/APL13031-2%20-%20Z-Wave%20Networking%20Basics.pdf)

31. Each Accused Instrumentality has a low power satellite radio transceiver (*e.g.*, radio frequency transceivers within the various Z-Wave devices) having a range being less than a distance to at least some of the appliances. (*Supra* ¶20).

32. Each Accused Instrumentality has an appliance interface for communicating with the at least one local appliance (*e.g.*, an interface which connects and makes possible the transmission of signal to the actual electrical appliance like a sensor). (*Supra* ¶20).

33. Each Accused Instrumentality has a microcomputer (*e.g.*, microcontroller) connected between the satellite radio transceiver (*e.g.*, Z-Wave transceiver) and the appliance interface and having first program instructions for controlling the satellite transceiver (*e.g.*, the microcontroller controls the transmission of signals from the transceiver to the other Z-Wave nodes in the network) and second program instructions for directing communication between the satellite transceiver and the appliance interface (*e.g.*, the microcontroller within the Z-Wave device enables the command received from the appliance interface to be communicated to the

local appliance by the Z-Wave transceiver so that the intended action can be executed such as monitor a sensor). (*Supra* ¶¶20, 22; https://Z-Wavealliance.org/Z-Wave-oems-developers/; http://zwavepublic.com/sites/default/files/command_class_specs_2017A/SDS13782-4%20Z-Wave%20Management%20Command%20Class%20Specification.pdf; http://www.rfwireless-world.com/Tutorials/Z-Wave-physical-layer.html).

34. Each Accused Instrumentality has a first program instructions including detecting communications directed by another of the relay units (*e.g.*, another Z-Wave node acting as a repeater) relative to the same appliance controller (*e.g.*, targeted Z-Wave node), signaling receipt of the directed communications (sending acknowledgement signal through the Z-Wave transceiver), and directing communications to the other of the relay units relative to the same appliance controller (*e.g.*, sending status of an appliance or signal from a connected sensor). For example, the Scout Hub can send/receive messages to program various connected Z-Wave devices. (*Supra* ¶20; http://zwavepublic.com/sites/default/files/APL13031-2%20-%20Z-Wave%20Networking%20Basics.pdf; http://zwavepublic.com/sites/default/files/command_class_specs_2017A/SDS13784-4%20Z-Wave%20Network-Protocol%20Command%20Class%20Specification.pdf).

35. Each Accused Instrumentality has a second program instructions including detecting relay communications directed between the another of the relay units and a different relay unit, transmitting the relay communications, detecting a reply communication from the different relay unit, and transmitting the reply communication to the other of the relay units, wherein at least some of the relay units communicate with others of the relay units by relay communications using at least two others of the relay units (*e.g.*, a Z-Wave node detects messages from primary controller and checks whether message is intended for itself, if not, then

acting as a repeater, transmits it to next intended device in the route. Also, the Z-Wave node detects messages from another Z-Wave node and forwards it to primary controller. N number of nodes may be involved in the process acting as repeaters or relay units). The Accused Instrumentality works on Z-Wave technology which uses mesh network and would communicate with the other relay units by relay communications using at least two others of the relay units (*e.g.*, repeaters). (*Supra* ¶¶20, 24; http://zwavepublic.com/sites/default/files/APL13031-2%20-%20Z-Wave%20Networking%20Basics.pdf; http://zwavepublic.com/sites/default/files/command_class_specs_2017A/SDS13784-4%20Z-Wave%20Network-Protocol%20Command%20Class%20Specification.pdf; https://www.zwaveproducts.com/learn/ask-an-expert/glossary/mesh-network; http://docslide.us/documents/Z-Wave-technical-basics-small.html; http://www.zwaveproducts.com/learn/Z-Wave).

36. Plaintiff has been damaged because of Defendant's infringing conduct. Defendant is thus liable to Plaintiff for damages in an amount that adequately compensates Plaintiff for such Defendant's infringement of the '166 Patent and the '245 Patent, *i.e.*, in an amount that by law cannot be less than would constitute a reasonable royalty for the use of the patented technology, together with interest and costs as fixed by this Court under 35 U.S.C. § 284.

37. On information and belief, Defendant had at least constructive notice of the '166 Patent and the '245 Patent by operation of law, and there are no marking requirements that have not been complied with.

IV. JURY DEMAND

Plaintiff, under Rule 38 of the Federal Rules of Civil Procedure, requests a trial by jury of any issues so triable by right.

V. PRAYER FOR RELIEF

WHEREFORE, Plaintiff respectfully requests that the Court find in its favor and against Defendant, and that the Court grant Plaintiff the following relief:

a. Judgment that one or more claims of United States Patent No. 6,275,166 have been infringed, either literally and/or under the doctrine of equivalents, by Defendant;

b. Judgment that one or more claims of United States Patent No. 6,873,245 have been infringed, either literally and/or under the doctrine of equivalents, by Defendant;

c. Judgment that Defendant account for and pay to Plaintiff all damages to and costs incurred by Plaintiff because of Defendant's infringing activities and other conduct complained of herein, and an accounting of all infringements and damages not presented at trial;

d. That Plaintiff be granted pre-judgment and post-judgment interest on the damages caused by Defendant's infringing activities and other conduct complained of herein;

e. That Plaintiff be granted such other and further relief as the Court may deem just and proper under the circumstances.

July 27, 2019

STAMOULIS & WEINBLATT LLC

/s/ Stamatios Stamoulis
Stamatios Stamoulis (No. 4606)
800 N. West Street, Third Floor
Wilmington, DE 19809
(302) 999-1540
stamoulis@swdelaw.com

Attorneys for Plaintiff Karamelion LLC

OF COUNSEL:

David R. Bennett
Direction IP Law
P.O. Box 14184
Chicago, IL 60614-0184
(312) 291-1667
dbennett@directionip.com