FILED

10 DEC 15 PM 3: 14

CLERK U.S. DISTRICT COURT
CENTRAL DIST. OF CALIF.
LOS ANGELES

BY: _____

John W. Olivo, Jr., ESQ. (*Pro Hac Vice Application Pending*)
Ward & Olivo
380 Madison Avenue
New York, New York 10017
Telephone: (212) 697-6262
Facsimile: (212) 972-5866
olivoj@wardolivo.com

Attorneys for Plaintiff,
JOAO CONTROL & MONITORING SYSTEMS OF CALIFORNIA, LLC

STEVEN W. RITCHESON, ESQ (SBN 174062)
White Field, Inc.
9800 D Topanga Canyon Blvd. #347
Chatsworth, California 91311
Telephone: (818) 882-1030
Facsimile: (818) 337-0383
swritcheson@whitefieldinc.com

Attorneys for Plaintiff,
JOAO CONTROL & MONITORING SYSTEMS OF CALIFORNIA, LLC

UNITED STATES DISTRICT COURT

FOR THE CENTRAL DISTRICT OF CALIFORNIA

LOS ANGELES DIVISION

| | |
|---|---|
| JOAO CONTROL & MONITORING SYSTEMS OF CALIFORNIA, LLC<br><br>Plaintiff,<br><br>v.<br><br>ACTI CORPORATION INC., ADT SECURITY SERVICES, INC., ALARMCLUB.COM, INC., AMERICAN HONDA MOTOR COMPANY, INC., BMW OF NORTH AMERICA, LLC, BYREMOTE, INC., DRIVECAM, INC., HONEYWELL INTERNATIONAL, INC., IVEDA CORPORATION, MAGTEC PRODUCTS, INC., MERCEDES-BENZ USA, LLC, ON-NET SURVEILLANCE SYSTEMS, INC., ONSTAR, LLC, SAFEFREIGHT TECHNOLOGY CORPORATION, SKYWAY SECURITY, LLC, SLING MEDIA, INC., SMARTVUE CORPORATION, TOYOTA MOTOR SALES, USA, INC., TYCO | Case No. SACV10-01909 DOC (RNBx)<br><br>**COMPLAINT FOR PATENT INFRINGEMENT**<br><br>**Jury Trial Demanded**<br><br>BY FAX |

INTERNATIONAL US, INC., UTC FIRE AND SECURITY CORPORATION, XANBOO, INC.

Defendants.

## PLAINTIFF'S ORIGINAL COMPLAINT

Plaintiff Joao Control and Monitoring Systems of California, LLC ("Plaintiff"), by and through its undersigned counsel, files this Original Complaint against Plaintiff Joao Control and Monitoring Systems of California, LLC ("Plaintiff"), by and through its undersigned counsel, files this Original Complaint against ACTI Corporation Inc., ADT Security Services, Inc., Alarmclub.com, Inc., American Honda Motor Company, Inc., BMW of North America, LLC, Byremote, Inc., Drivecam, Inc., Honeywell International, Inc., Iveda Corporation, Magtec Products, Inc., Mercedes-Benz USA, LLC, On-Net Surveillance Systems, Inc., Onstar, LLC, Safefreight Technology Corporation, Skyway Security, LLC, Sling Media, Inc., Smartvue Corporation, Toyota Motor Sales, USA, Inc., Tyco International US, Inc., UTC Fire And Security Corporation, Xanboo, Inc. (collectively "Defendants") as follows:

## NATURE OF THE ACTION

1. This is a patent infringement action to stop Defendants' infringement of Plaintiff's United States Patent No. 5,917,405 entitled "*Control Apparatus and Methods for Vehicles*" (the "'405 patent"; a copy of which is attached hereto as Exhibit A), United States Patent No. 6,542,076 entitled "*Control, Monitoring and/or Security Apparatus*" (the "'076 patent"; a copy of which is attached hereto as Exhibit B), United States Patent No. 6,549,130 entitled "*Control Apparatus and Method for Vehicles and/or for Premises*" (the "'130 patent"; a copy of which is attached hereto as Exhibit C), United States Patent No. 6,587,046 entitled "*Monitoring Apparatus and Method*" (the "'046 patent"; a copy of which is attached hereto as Exhibit D) and United States Patent No. 7,397,363 entitled "*Control and/or Monitoring Apparatus and Method*" (the "'363 patent"; a copy of which is attached hereto as Exhibit E) (collectively, "the patents-in-suit"). Plaintiff is the exclusive licensee of the '585 patent, '076 patent, '130 patent, '046 patent and '363 patent with respect to the Defendants. Plaintiff seeks injunctive relief and monetary damages.

**PARTIES**

2. Plaintiff is a limited liability company organized and existing under the laws of the State of California. Plaintiff maintains its principal place of business at Ten Bank Street, #560, White Plains, New York 10606. Plaintiff is the exclusive licensee of the patents-in-suit with respect to the Defendants, and possesses the right to sue for infringement and recover past damages.

3. Upon information and belief, ACTi Corporation, Inc. ("Acti") is a corporation organized and existing under the laws of the State of Delaware, with its principal place of business located at 10 Edelman, Suite 1B, Irvine, California 92618.

4. Upon information and belief, ADT Security Services, Inc. ("ADT") is a corporation organized and existing under the laws of the State of Delaware, with its principal place of business located at One Town Center Road, Boca Raton, Florida 33431.

5. Upon information and belief, Alarmclub.com, Inc. ("Alarmclub") is a limited corporation organized and existing under the laws of the State of Florida, with its principal place of business located at 1133 Old Okeechobee Road, West Palm Beach, Florida 33401.

6. Upon information and belief, American Honda Motor Co., Inc. ("Honda") is a corporation organized and existing under the laws of the State of Delaware, with its principal place of business located at 1919 Torrance Boulevard, Torrance, California 90501.

7. Upon information and belief, BMW of North America, LLC. ("BMW") is a limited liability company organized and existing under the laws of the State of Delaware, with its principal place of business located at 300 Chestnut Ridge Road, Woodcliff Lake, New Jersey 07677

8. Upon information and belief, Byremote, Inc. ("Byremote") is a corporation organized and existing under the laws of the State of North Dakota, with its principal place of business located at 5702 33rd St South, Fargo, North Dakota 58104.

9. Upon information and belief, Drivecam, Inc. ("Drivecam") is a corporation organized and existing under the laws of the State of Delaware, with its principal place of business located at 1919 Torrance Boulevard, Torrance, California 90501.

10. Upon information and belief, Honeywell International, Inc. ("Honeywell") is a corporation organized and existing under the laws of the State of Delaware, with its principal place of business located at 101 Columbia Road, Morristown, New Jersey 07962.

11. Upon information and belief, Iveda Corporation. ("Iveda") is a corporation organized and existing under the laws of the State of Nevada, with its principal place of business located at 1201 S. Alma School Road, Suite 4450, Mesa, Arizona 85210.

12. Upon information and belief, Magtec Products, Inc. ("Magtec") is a corporation organized and existing under the laws of the Alberta, Canada, with its principal place of business located at 7000 Adams Street, Suite B110, Willowbrook, Illinois 60527.

13. Upon information and belief, Mercedes-Benz USA, LLC. ("Mercedes") is a limited liability company organized and existing under the laws of the State of Delaware, with its principal place of business located at 3 Mercedes Drive, Montvale, New Jersey 07645.

14. Upon information and belief, On-Net Surveillance Systems, Inc. ("On-Net") is a corporation organized and existing under the laws of the State of New York, with its principal place of business located at One Blue Hill Plaza, 7th Floor, Pearl River, NY 10965.

15. Upon information and belief, OnStar, LLC. ("Onstar") is a limited liability company organized and existing under the laws of the State of Delaware, with its principal place of business located at 400 Renaissance Center, Detroit, MI 48265.

16. Upon information and belief, Safefreight Technology Corporation. ("Safefreight") is a corporation organized and existing under the laws of Alberta, Canada, with its principal place of business located at #212, 1171 Market Street, Fort Mill, South Carolina 29708.

17. Upon information and belief, Skyway Security, LLC ("Skyway") is a limited liability company organized and existing under the laws of the State of Florida, with its principal place of business located at 5647 110th Avenue North, Royal Palm Beach, Florida 33411.

18. Upon information and belief, Sling Media, Inc. ("Sling") is a corporation organized and existing under the laws of the State of Delaware, with its principal place of business located at 1051 E. Hillsdale Blvd, Suite 500, Foster City, California 94404.

19. Upon information and belief, Smartvue Corporation ("Smartvue") is a corporation organized and existing under the laws of the State of Delaware, with its principal place of business located at 3200 West End Avenue, Suite 500, Nashville, Tennessee 37203.

20. Upon information and belief, Toyota Motor Sales, USA, Inc. ("Toyota") is a corporation organized and existing under the laws of the State of Delaware, with its principal place of business located at 19001 South Western Avenue, Torrance, C 90501.

21. Upon information and belief, Tyco International, Inc. ("Tyco") is a corporation organized and existing under the laws of the State of Delaware, with its principal place of business located at 9 Roszel Road, Princeton, New Jersey 08540.

22. Upon information and belief, UTC Fire and Security Corporation ("UTC") is a corporation organized and existing under the laws of the State of Delaware, with its principal place of business located at 9 Farm Springs Road, Farmington, Connecticut 06034.

23. Upon information and belief, Xanboo, Inc. ("Xanboo") is a corporation organized and existing under the laws of the State of Delaware, with its principal place of business located at 286 Fifth Avenue, 4th Floor, New York, New York 10001.

## JURISDICTION AND VENUE

24. This action arises under the Patent Laws of the United States, 35 U.S.C. § 1 *et seq.*, including 35 U.S.C. §§ 271, 281, 283, 284, and 285. This Court has subject matter jurisdiction over this case for patent infringement under 28 U.S.C. §§ 1331 and 1338(a).

25. The Court has personal jurisdiction over each Defendant because: each Defendant is present within or has minimum contacts with the State of California and the Central District of California; each Defendant has purposefully availed itself of the privileges of conducting business in the State of California and in the Central District of California; each Defendant has sought protection and benefit from the laws of the State of California; each Defendant regularly conducts

business within the State of California and within the Central District of California; and Plaintiff's causes of action arise directly from Defendants' business contacts and other activities in the State of California and in the Central District of California.

26. More specifically, each Defendant, directly and/or through authorized intermediaries, ships, distributes, offers for sale, sells, and/or advertises (including the provision of an interactive web page) its products and services in the United States, the State of California, and the Central District of California. Upon information and belief, each Defendant has committed patent infringement in the State of California and in the Central District of California, has contributed to patent infringement in the State of California and in the Central District of California, and/or has induced others to commit patent infringement in the State of California and in the Central District of California. Each Defendant solicits customers in the State of California and in the Central District of California. Each Defendant has many paying customers who are residents of the State of California and the Central District of California and who each use each of the respective Defendant's products and services in the State of California and in the Central District of California.

27. Venue is proper in the Central District of California pursuant to 28 U.S.C. §§ 1391 and 1400(b).

**COUNT I – PATENT INFRINGEMENT**

28. The '405 patent was duly and legally issued by the United States Patent and Trademark Office on June 29, 1999, after full and fair examination for systems and methods for controlling vehicles using at least three control devices. Plaintiff is the exclusive licensee of the '405 patent with respect to the Defendants, and possesses all substantive rights and rights of recovery under the '405 patent with respect to the Defendants, including the right to sue for infringement and recover past damages.

29. The '076 patent was duly and legally issued by the United States Patent and Trademark Office on April 1, 2003, after full and fair examination for systems and methods for controlling vehicle and premises systems using at least three control devices. Plaintiff is the

exclusive licensee of the ’076 patent with respect to the Defendants, and possesses all substantive rights and rights of recovery under the ’076 patent with respect to the Defendants, including the right to sue for infringement and recover past damages.

30. The ’130 patent was duly and legally issued by the United States Patent and Trademark Office on April 15, 2003, after full and fair examination for systems and methods for controlling vehicle or premises systems using at least three control devices. Plaintiff is the exclusive licensee of the ’130 patent with respect to the Defendants, and possesses all substantive rights and rights of recovery under the ’130 patent with respect to the Defendants, including the right to sue for infringement and recover past damages.

31. The ’046 patent was duly and legally issued by the United States Patent and Trademark Office on July 1, 2003, after full and fair examination for systems and methods for vehicle and premises video monitoring. Plaintiff is the exclusive licensee of the ’046 patent with respect to the Defendants, and possesses all substantive rights and rights of recovery under the ’046 patent with respect to the Defendants, including the right to sue for infringement and recover past damages.

32. The ’363 patent was duly and legally issued by the United States Patent and Trademark Office on July 8, 2008, after full and fair examination for systems and methods for controlling vehicle and premises systems using at least two processing devices. Plaintiff is the exclusive licensee of the ’363 patent with respect to the Defendants, and possesses all substantive rights and rights of recovery under the ’363 patent with respect to the Defendants, including the right to sue for infringement and recover past damages.

33. Plaintiff is informed and believes that Acti owns, operates, advertises, controls, sells, and otherwise provides hardware and software for “control apparatuses for premises systems” including the Acti Network Video recorder (“the Acti systems”) and associated hardware and software. Upon information and belief, Acti has infringed and continues to infringe one or more claims of the ’130 patent by making, using, providing, offering to sell, and selling (directly or through intermediaries), in this district and elsewhere in the United States, systems for

remotely controlling premises systems, including the Acti systems. Upon information and belief, Acti has infringed and continues to infringe one or more claims of the ’046 patent by making, using, providing, offering to sell, and selling (directly or through intermediaries), in this district and elsewhere in the United States, systems and methods for remotely controlling premises systems, including the Acti systems. More particularly, Plaintiff is informed and believes that Acti provides hardware and software configured to remotely control one or more premises video cameras in a manner claimed in both the ’130 patent and the ’046 patent.

34. Plaintiff is informed and believes that ADT owns, operates, advertises, controls, sells, and otherwise provides hardware and software for “control apparatuses for premises systems” including the ADT Safewatch Videoview system (“the ADT systems”) and associated hardware and software. Upon information and belief, ADT has infringed and continues to infringe one or more claims of the ’130 patent by making, using, providing, offering to sell, and selling (directly or through intermediaries), in this district and elsewhere in the United States, systems for remotely controlling premises systems, including the ADT systems. Upon information and belief, ADT has infringed and continues to infringe one or more claims of the ’046 patent by making, using, providing, offering to sell, and selling (directly or through intermediaries), in this district and elsewhere in the United States, systems and methods for remotely controlling premises systems, including the ADT systems. More particularly, Plaintiff is informed and believes that ADT provides hardware and software configured to remotely control one or more premises video cameras in a manner claimed in both the ’130 patent and the ’046 patent.

35. Plaintiff is informed and believes that Alarmclub owns, operates, advertises, controls, sells, and otherwise provides hardware and software for “control apparatuses for premises systems” including at least cellular alarm communicators, video surveillance kits, video surveillance systems, wirelesss, cellular and internet security systems, and the GeoAlarm Monitoring Services (“the Alarmclub systems”) and associated hardware and software, through at least its GeoArm Security Solutions subsidiary. Upon information and belief, Alarmclub has

infringed and continues to infringe one or more claims of the ’076 patent by making, using, providing, offering to sell, and selling (directly or through intermediaries), in this district and elsewhere in the United States, systems and methods for remotely controlling premises systems, including the Alarmclub systems. Upon information and belief, Alarmclub has infringed and continues to infringe one or more claims of the ’130 patent by making, using, providing, offering to sell, and selling (directly or through intermediaries), in this district and elsewhere in the United States, systems for remotely controlling premises systems, including the Alarmclub systems. More particularly, Plaintiff is informed and believes that Alarmclub provides hardware and software configured to remotely control one or more premises video cameras or alarm systems in a manner claimed in both the ’076 patent and the ’130 patent.

36. Plaintiff is informed and believes that Honda owns, operates, advertises, controls, sells, and otherwise provides hardware and software for “control apparatuses for vehicle systems” including the AcuraLink system (“the Honda systems”) and associated hardware and software. Upon information and belief, Honda has infringed and continues to infringe one or more claims of the ’405 patent by making, using, providing, offering to sell, and selling (directly or through intermediaries), in this district and elsewhere in the United States, systems for remotely controlling vehicle systems, including the Honda systems. Upon information and belief, Honda has infringed and continues to infringe one or more claims of the ’130 patent by making, using, providing, offering to sell, and selling (directly or through intermediaries), in this district and elsewhere in the United States, systems and methods for remotely controlling vehicle systems, including the Honda systems. More particularly, Plaintiff is informed and believes that Honda provides hardware and software configured to remotely control one or more vehicle communications and diagnostic systems in a manner claimed in both the ’405 patent and the ’130 patent.

37. Plaintiff is informed and believes that BMW owns, operates, advertises, controls, sells, and otherwise provides hardware and software for “control apparatuses for vehicle systems” including the BMW Assist system (“the BMW systems”) and associated hardware and software.

Upon information and belief, BMW has infringed and continues to infringe one or more claims of the ’405 patent by making, using, providing, offering to sell, and selling (directly or through intermediaries), in this district and elsewhere in the United States, systems for remotely controlling vehicle systems, including the BMW systems. Upon information and belief, BMW has infringed and continues to infringe one or more claims of the ’130 patent by making, using, providing, offering to sell, and selling (directly or through intermediaries), in this district and elsewhere in the United States, systems and methods for remotely controlling vehicle systems, including the BMW systems. More particularly, Plaintiff is informed and believes that BMW provides hardware and software configured to remotely control one or more vehicle security, communications or diagnostic systems in a manner claimed in both the ’405 patent and the ’130 patent.

38. Plaintiff is informed and believes that Byremote owns, operates, advertises, controls, sells, and otherwise provides hardware and software for “control apparatuses for premises systems” including the Byremote Survellance Center (“the Byremote systems”) and associated hardware and software. Upon information and belief, Byremote has infringed and continues to infringe one or more claims of the ’130 patent by making, using, providing, offering to sell, and selling (directly or through intermediaries), in this district and elsewhere in the United States, systems for remotely controlling premises systems, including the Byremote systems. Upon information and belief, Byremote has infringed and continues to infringe one or more claims of the ’046 patent by making, using, providing, offering to sell, and selling (directly or through intermediaries), in this district and elsewhere in the United States, systems and methods for remotely controlling premises systems, including the Byremote systems. More particularly, Plaintiff is informed and believes that Byremote provides hardware and software configured to remotely control one or more premises video cameras in a manner claimed in both the ’130 patent and the ’046 patent.

39. Plaintiff is informed and believes that Drivecam owns, operates, advertises, controls, sells, and otherwise provides hardware and software for “control apparatuses for vehicle

systems" including the Drivecam vehicle monitoring and recording system ("the Drivecam systems") and associated hardware and software. Upon information and belief, Drivecam has infringed and continues to infringe one or more claims of the '405 patent by making, using, providing, offering to sell, and selling (directly or through intermediaries), in this district and elsewhere in the United States, systems for remotely controlling vehicle systems, including the Drivecam systems. Upon information and belief, Drivecam has infringed and continues to infringe one or more claims of the '130 patent by making, using, providing, offering to sell, and selling (directly or through intermediaries), in this district and elsewhere in the United States, systems and methods for remotely controlling vehicle systems, including the Drivecam systems. More particularly, Plaintiff is informed and believes that Drivecam provides hardware and software configured to remotely control one or more vehicle monitoring systems in a manner claimed in both the '405 patent and the '130 patent.

40. Plaintiff is informed and believes that Honeywell owns, operates, advertises, controls, sells, and otherwise provides hardware and software for "control apparatuses for premises systems" including the Honeywell NetAXS systems ("the Honeywell systems") and associated hardware and software. Upon information and belief, Honeywell has infringed and continues to infringe one or more claims of the '363 patent by making, using, providing, offering to sell, and selling (directly or through intermediaries), in this district and elsewhere in the United States, systems for remotely controlling premises systems, including the Honeywell systems. Upon information and belief, Honeywell has infringed and continues to infringe one or more claims of the '363 patent by making, using, providing, offering to sell, and selling (directly or through intermediaries), in this district and elsewhere in the United States, systems and methods for remotely controlling premises systems, including the Honeywell systems. More particularly, Plaintiff is informed and believes that Honeywell provides hardware and software configured to remotely control one or more premises door security and control systems in a manner claimed in both the '130 patent and the '046 patent.

41. Plaintiff is informed and believes that Iveda owns, operates, advertises, controls, sells, and otherwise provides hardware and software for "control apparatuses for premises systems" including the Iveda Real Time Remote Video Surveillance System ("the Iveda systems") and associated hardware and software. Upon information and belief, Iveda has infringed and continues to infringe one or more claims of the '130 patent by making, using, providing, offering to sell, and selling (directly or through intermediaries), in this district and elsewhere in the United States, systems for remotely controlling premises systems, including the Iveda systems. Upon information and belief, Iveda has infringed and continues to infringe one or more claims of the '046 patent by making, using, providing, offering to sell, and selling (directly or through intermediaries), in this district and elsewhere in the United States, systems and methods for remotely controlling premises systems, including the Iveda systems. More particularly, Plaintiff is informed and believes that Iveda provides hardware and software configured to remotely control one or more premises video cameras in a manner claimed in both the '130 patent and the '046 patent.

42. Plaintiff is informed and believes that Magtec owns, operates, advertises, controls, sells, and otherwise provides hardware and software for "control apparatuses for vehicle systems" including the Magtec Onboard Control System and Mobile Communications System ("the Magtec systems") and associated hardware and software. Upon information and belief, Magtec has infringed and continues to infringe one or more claims of the '405 patent by making, using, providing, offering to sell, and selling (directly or through intermediaries), in this district and elsewhere in the United States, systems for remotely controlling vehicle systems, including the Magtec systems. Upon information and belief, Magtec has infringed and continues to infringe one or more claims of the '130 patent by making, using, providing, offering to sell, and selling (directly or through intermediaries), in this district and elsewhere in the United States, systems and methods for remotely controlling vehicle systems, including the Magtec systems. More particularly, Plaintiff is informed and believes that Magtec provides hardware and software

configured to remotely control one or more vehicle monitoring systems in a manner claimed in both the ’405 patent and the ’130 patent.

43. Plaintiff is informed and believes that Mercedes owns, operates, advertises, controls, sells, and otherwise provides hardware and software for “control apparatuses for vehicle systems” including the Mercedes Mbrace system (“the Mercedes systems”) and associated hardware and software. Upon information and belief, Mercedes has infringed and continues to infringe one or more claims of the ’405 patent by making, using, providing, offering to sell, and selling (directly or through intermediaries), in this district and elsewhere in the United States, systems for remotely controlling vehicle systems, including the Mercedes systems. Upon information and belief, Mercedes has infringed and continues to infringe one or more claims of the ’130 patent by making, using, providing, offering to sell, and selling (directly or through intermediaries), in this district and elsewhere in the United States, systems and methods for remotely controlling vehicle systems, including the Mercedes systems. More particularly, Plaintiff is informed and believes that Mercedes provides hardware and software configured to remotely control one or more vehicle security, communications or diagnostic systems in a manner claimed in both the ’405 patent and the ’130 patent.

44. Plaintiff is informed and believes that On-net owns, operates, advertises, controls, sells, and otherwise provides hardware and software for “control apparatuses for premises systems” including the On-net NetDVR and NetDVMS systems (“the On-net systems”) and associated hardware and software. Upon information and belief, On-net has infringed and continues to infringe one or more claims of the ’363 patent by making, using, providing, offering to sell, and selling (directly or through intermediaries), in this district and elsewhere in the United States, systems for remotely controlling premises systems, including the On-net systems. Upon information and belief, On-net has infringed and continues to infringe one or more claims of the ’363 patent by making, using, providing, offering to sell, and selling (directly or through intermediaries), in this district and elsewhere in the United States, systems and methods for remotely controlling premises systems, including the On-net systems. More particularly, Plaintiff

is informed and believes that On-net provides hardware and software configured to remotely control one or more premises camera and/or video recording devices in a manner claimed in both the ’130 patent and the ’046 patent.

45. Plaintiff is informed and believes that Onstar owns, operates, advertises, controls, sells, and otherwise provides hardware and software for “control apparatuses for vehicle systems” including the Onstar Assist system (“the Onstar systems”) and associated hardware and software. Upon information and belief, Onstar has infringed and continues to infringe one or more claims of the ’405 patent by making, using, providing, offering to sell, and selling (directly or through intermediaries), in this district and elsewhere in the United States, systems for remotely controlling vehicle systems, including the Onstar systems. Upon information and belief, Onstar has infringed and continues to infringe one or more claims of the ’130 patent by making, using, providing, offering to sell, and selling (directly or through intermediaries), in this district and elsewhere in the United States, systems and methods for remotely controlling vehicle systems, including the Onstar systems. More particularly, Plaintiff is informed and believes that Onstar provides hardware and software configured to remotely control one or more vehicle security, communications or diagnostic systems in a manner claimed in both the ’405 patent and the ’130 patent.

46. Plaintiff is informed and believes that Safefreight owns, operates, advertises, controls, sells, and otherwise provides hardware and software for “control apparatuses for vehicle systems” including the Safefreight Smartfleet system (“the Safefreight systems”) and associated hardware and software. Upon information and belief, Safefreight has infringed and continues to infringe one or more claims of the ’405 patent by making, using, providing, offering to sell, and selling (directly or through intermediaries), in this district and elsewhere in the United States, systems for remotely controlling vehicle systems, including the Safefreight systems. Upon information and belief, Safefreight has infringed and continues to infringe one or more claims of the ’130 patent by making, using, providing, offering to sell, and selling (directly or through intermediaries), in this district and elsewhere in the United States, systems and methods for

remotely controlling vehicle systems, including the Safefreight systems. More particularly, Plaintiff is informed and believes that Safefreight provides hardware and software configured to remotely control one or more vehicle monitoring or diagnostic systems in a manner claimed in both the ’405 patent and the ’130 patent.

47. Plaintiff is informed and believes that Skyway owns, operates, advertises, controls, sells, and otherwise provides hardware and software for “control apparatuses for vehicle systems” including the Skyway Netvision Mobile Trailer system and Maxseries DVR system (“the Skyway systems”) and associated hardware and software. Upon information and belief, Skyway has infringed and continues to infringe one or more claims of the ’405 patent by making, using, providing, offering to sell, and selling (directly or through intermediaries), in this district and elsewhere in the United States, systems for remotely controlling vehicle systems, including the Skyway systems. Upon information and belief, Skyway has infringed and continues to infringe one or more claims of the ’130 patent by making, using, providing, offering to sell, and selling (directly or through intermediaries), in this district and elsewhere in the United States, systems and methods for remotely controlling vehicle systems, including the Skyway systems. More particularly, Plaintiff is informed and believes that Skyway provides hardware and software configured to remotely control one or more vehicle security and camera systems in a manner claimed in both the ’405 patent and the ’130 patent.

48. Plaintiff is informed and believes that Sling owns, operates, advertises, controls, sells, and otherwise provides hardware and software for “control apparatuses for premises systems” including the Sling Slingbox devices (“the Sling systems”) and associated hardware and software. Upon information and belief, Sling has infringed and continues to infringe one or more claims of the ’130 patent by making, using, providing, offering to sell, and selling (directly or through intermediaries), in this district and elsewhere in the United States, systems for remotely controlling premises systems, including the Sling systems. Upon information and belief, Sling has infringed and continues to infringe one or more claims of the ’046 patent by making, using, providing, offering to sell, and selling (directly or through intermediaries), in this district and

elsewhere in the United States, systems and methods for remotely controlling premises systems, including the Sling systems. More particularly, Plaintiff is informed and believes that Sling provides hardware and software configured to remotely control one or more premises video recorders in a manner claimed in both the ’130 patent and the ’046 patent.

49. Plaintiff is informed and believes that Smartvue owns, operates, advertises, controls, sells, and otherwise provides hardware and software for “control apparatuses for premises systems” including the Smartvue S9 system (“the Smartvue systems”) and associated hardware and software. Upon information and belief, Smartvue has infringed and continues to infringe one or more claims of the ’130 patent by making, using, providing, offering to sell, and selling (directly or through intermediaries), in this district and elsewhere in the United States, systems for remotely controlling premises systems, including the Smartvue systems. Upon information and belief, Smartvue has infringed and continues to infringe one or more claims of the ’046 patent by making, using, providing, offering to sell, and selling (directly or through intermediaries), in this district and elsewhere in the United States, systems and methods for remotely controlling premises systems, including the Smartvue systems. More particularly, Plaintiff is informed and believes that Smartvue provides hardware and software configured to remotely control one or more premises video cameras and/or video recorders in a manner claimed in both the ’130 patent and the ’046 patent.

50. Plaintiff is informed and believes that Toyota owns, operates, advertises, controls, sells, and otherwise provides hardware and software for “control apparatuses for vehicle systems” including the Toyota Lexus Safety Connect system (“the Toyota systems”) and associated hardware and software. Upon information and belief, Toyota has infringed and continues to infringe one or more claims of the ’405 patent by making, using, providing, offering to sell, and selling (directly or through intermediaries), in this district and elsewhere in the United States, systems for remotely controlling vehicle systems, including the Toyota systems. Upon information and belief, Toyota has infringed and continues to infringe one or more claims of the ’130 patent by making, using, providing, offering to sell, and selling (directly or through

intermediaries), in this district and elsewhere in the United States, systems and methods for remotely controlling vehicle systems, including the Toyota systems. More particularly, Plaintiff is informed and believes that Toyota provides hardware and software configured to remotely control one or more vehicle security, communications and/or monitoring systems in a manner claimed in both the ’405 patent and the ’130 patent.

51. Plaintiff is informed and believes that Tyco owns, operates, advertises, controls, sells, and otherwise provides hardware and software for “control apparatuses for premises systems” including at least wireless alarm systems and alarm communicators, and the Connect 24 Monitoring Services (“the Tyco systems”) and associated hardware and software, through at least its DSC subsidiary. Upon information and belief, Tyco has infringed and continues to infringe one or more claims of the ’076 patent by making, using, providing, offering to sell, and selling (directly or through intermediaries), in this district and elsewhere in the United States, systems and methods for remotely controlling premises systems, including the Tyco systems. Upon information and belief, Tyco has infringed and continues to infringe one or more claims of the ’130 patent by making, using, providing, offering to sell, and selling (directly or through intermediaries), in this district and elsewhere in the United States, systems for remotely controlling premises systems, including the Tyco systems. More particularly, Plaintiff is informed and believes that Tyco provides hardware and software configured to remotely control one or more premises alarm systems in a manner claimed in both the ’076 patent and the ’130 patent.

52. Plaintiff is informed and believes that UTC owns, operates, advertises, controls, sells, and otherwise provides hardware and software for “control apparatuses for premises systems” including the UTC SkyPoint NetDVMS systems (“the UTC systems”) and associated hardware and software though at least its Lenel subsidiary. Upon information and belief, UTC has infringed and continues to infringe one or more claims of the ’363 patent by making, using, providing, offering to sell, and selling (directly or through intermediaries), in this district and elsewhere in the United States, systems for remotely controlling premises systems, including the

UTC systems. Upon information and belief, UTC has infringed and continues to infringe one or more claims of the ’363 patent by making, using, providing, offering to sell, and selling (directly or through intermediaries), in this district and elsewhere in the United States, systems and methods for remotely controlling premises systems, including the UTC systems. More particularly, Plaintiff is informed and believes that UTC provides hardware and software configured to remotely control one or more premises camera and/or video recording devices in a manner claimed in both the ’130 patent and the ’046 patent.

53. Plaintiff is informed and believes that Xanboo owns, operates, advertises, controls, sells, and otherwise provides hardware and software for “control apparatuses for premises systems” including the Xanboo Central Server system and at least the XG1000 controller (“the Xanboo systems”) and associated hardware and software. Upon information and belief, Xanboo has infringed and continues to infringe one or more claims of the ’130 patent by making, using, providing, offering to sell, and selling (directly or through intermediaries), in this district and elsewhere in the United States, systems for remotely controlling premises systems, including the Xanboo systems. Upon information and belief, Xanboo has infringed and continues to infringe one or more claims of the ’046 patent by making, using, providing, offering to sell, and selling (directly or through intermediaries), in this district and elsewhere in the United States, systems and methods for remotely controlling premises systems, including the Xanboo systems. More particularly, Plaintiff is informed and believes that Xanboo provides hardware and software configured to remotely control one or more premises video cameras, video recording devices, lighting systems and/or household appliances in a manner claimed in both the ’130 patent and the ’046 patent. Xanboo has further willfully infringed the ’130 patent and the ’046 patent, as Xanboo was party to litigation regarding one or more of the patents-in-suit, and has been aware of the patents-in-suit since at least 2004. Xanboo has also contributed to the infringement of one or more claims of the patents-in-suit by providing, with knowledge of the patents-in-suit, to users in this district and elsewhere in the United States, the Xanboo systems only useful for permitting users to remotely control one or more premises video cameras, video recording devices, lighting

systems and/or household appliances in a manner claimed in both the ’130 patent and the ’046 patent.

54. Each Defendant’s aforesaid activities have been without authority and/or license from Plaintiff.

55. Plaintiff is entitled to recover from the Defendants the damages sustained by Plaintiff as a result of the Defendants’ wrongful acts in an amount subject to proof at trial, which, by law, cannot be less than a reasonable royalty, together with interest and costs as fixed by this Court under 35 U.S.C. § 284.

56. Defendants’ respective infringement of Plaintiff’s exclusive rights under the ’405 patent, the ’076 patent, the ’130 patent, the ’363 patent and the ’046 patent will continue to damage Plaintiff, causing irreparable harm for which there is no adequate remedy at law, unless enjoined by this Court.

## JURY DEMAND

57. Plaintiff hereby requests a trial by jury pursuant to Rule 38 of the Federal Rules of Civil Procedure.

## PRAYER FOR RELIEF

Plaintiff respectfully requests that the Court find in its favor and against Defendants, and that the Court grant Plaintiff the following relief:

A. An adjudication that one or more claims of the ’405 patent have been infringed, either literally and/or under the doctrine of equivalents, by one or more Defendants and/or by others to whose infringement Defendants have contributed and/or by others whose infringement has been induced by Defendants;

B. An adjudication that one or more claims of the ’076 patent have been infringed, either literally and/or under the doctrine of equivalents, by one or more Defendants and/or by others to whose infringement Defendants have contributed and/or by others whose infringement has been induced by Defendants;

C. An adjudication that one or more claims of the '130 patent have been infringed, either literally and/or under the doctrine of equivalents, by one or more Defendants and/or by others to whose infringement Defendants have contributed and/or by others whose infringement has been induced by Defendants;

D. An adjudication that one or more claims of the '363 patent have been infringed, either literally and/or under the doctrine of equivalents, by one or more Defendants and/or by others to whose infringement Defendants have contributed and/or by others whose infringement has been induced by Defendants;

E. An adjudication that one or more claims of the '046 patent have been infringed, either literally and/or under the doctrine of equivalents, by one or more Defendants and/or by others to whose infringement Defendants have contributed and/or by others whose infringement has been induced by Defendants;

F. An award to Plaintiff of damages adequate to compensate Plaintiff for the Defendants' acts of infringement together with pre-judgment and post-judgment interest;

G. A grant of permanent injunction pursuant to 35 U.S.C. § 283, enjoining the Defendants from further acts of (1) infringement, (2) contributory infringement, and (3) actively inducing infringement with respect to the claims of the '585 patent and the '400 patent;

H. That this Court declare this to be an exceptional case and award Plaintiff its reasonable attorneys' fees and costs in accordance with 35 U.S.C. §285; and

I. Any further relief that this Court deems just and proper.

Respectfully submitted,
**WHITE FIELD, INC.**

Dated: December 15, 2010

Steven W. Ritcheson,
Attorney for Plaintiff
Olympic Developments AG, LLC

# Exhibit A

US005917405A

# United States Patent [19]

Joao

[11] Patent Number: 5,917,405

[45] Date of Patent: *Jun. 29, 1999

[54] **CONTROL APPARATUS AND METHODS FOR VEHICLES**

[76] Inventor: **Raymond Anthony Joao**, 122 Bellevue Pl., Yonkers, N.Y. 10703

[ * ] Notice: This patent issued on a continued prosecution application filed under 37 CFR 1.53(d), and is subject to the twenty year patent term provisions of 35 U.S.C. 154(a)(2).

[21] Appl. No.: **08/683,828**

[22] Filed: **Jul. 18, 1996**

**Related U.S. Application Data**

[63] Continuation-in-part of application No. 08/622,749, Mar. 27, 1996, and application No. 08/587,628, Jan. 17, 1996, abandoned, which is a continuation of application No. 08/489,238, Jun. 12, 1995, Pat. No. 5,513,244, which is a continuation of application No. 08/073,755, Jun. 8, 1993, abandoned.

[51] **Int. Cl.**[6] ..... **B60R 25/10**

[52] **U.S. Cl.** ..... **340/426**; 340/425.5; 340/825.32; 701/36; 307/10.2; 342/457; 455/404

[58] **Field of Search** ..... 342/457; 340/426, 340/825.34, 825.32, 825.36, 825.37, 825.49, 425.5; 370/352, 389; 307/10.2; 455/404; 180/287; 701/33, 36

[56] **References Cited**

U.S. PATENT DOCUMENTS


| | | | |
|---|---|---|---|
| 4,882,579 | 11/1989 | Siwiak | 340/825.44 |
| 4,882,746 | 11/1989 | Shimada | 379/61 |
| 5,003,317 | 3/1991 | Gray et al. . | |
| 5,031,103 | 7/1991 | Kamimura et al. | 364/449 |
| 5,081,667 | 1/1992 | Drori et al. | 340/426 |
| 5,113,427 | 5/1992 | Ryoichi et al. | 379/57 |
| 5,138,649 | 8/1992 | Krisbergh et al. | 379/56 |
| 5,173,932 | 12/1992 | Johansson et al. | 379/40 |
| 5,208,756 | 5/1993 | Song . | |
| 5,223,844 | 6/1993 | Mansell et al. | 342/457 |
| 5,247,564 | 9/1993 | Zicker | 340/426 |
| 5,276,728 | 1/1994 | Pagliaroli et al. | 379/426 |
| 5,287,398 | 2/1994 | Briault | 379/38 |
| 5,334,974 | 8/1994 | Simms et al. | 342/457 |
| 5,389,935 | 2/1995 | Drouault et al. | 340/426 |
| 5,418,537 | 5/1995 | Bird | 342/457 |
| 5,432,841 | 7/1995 | Rimer | 379/59 |
| 5,513,244 | 4/1996 | Joao et al. | 379/58 |
| 5,515,043 | 5/1996 | Berard et al. | 340/426 |
| 5,557,254 | 9/1996 | Johnson et al. | 340/825.34 |
| 5,563,453 | 10/1996 | Nyfelt | 340/426 |
| 5,682,133 | 10/1997 | Johnson et al. | 340/426 |


*Primary Examiner*—Michael Horabik
*Assistant Examiner*—Timothy Edwards, Jr.
*Attorney, Agent, or Firm*—Raymond A. Joao

[57] **ABSTRACT**

A control apparatus for a vehicle, which comprises a first control device. The first control device one of generates and transmits a first signal for one of activating, deactivating, enabling, and disabling, one of a vehicle component, a vehicle device, a vehicle system, and a vehicle subsystem. The first control device is located at the vehicle. The first control device is responsive to a second signal, wherein the second signal is one of generated by and transmitted from a second control device. The second control device is located at a location which is remote from the vehicle. The second control device is responsive to a third signal, wherein the third signal is one of generated by and transmitted from a third control device. The third control device is located at a location which is remote from the vehicle and remote from the second control device.

**20 Claims, 20 Drawing Sheets**

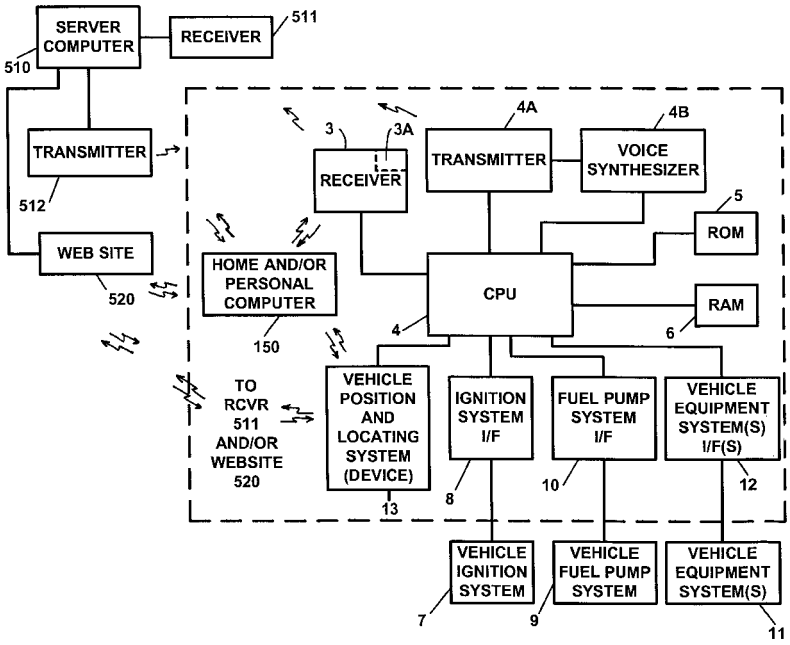

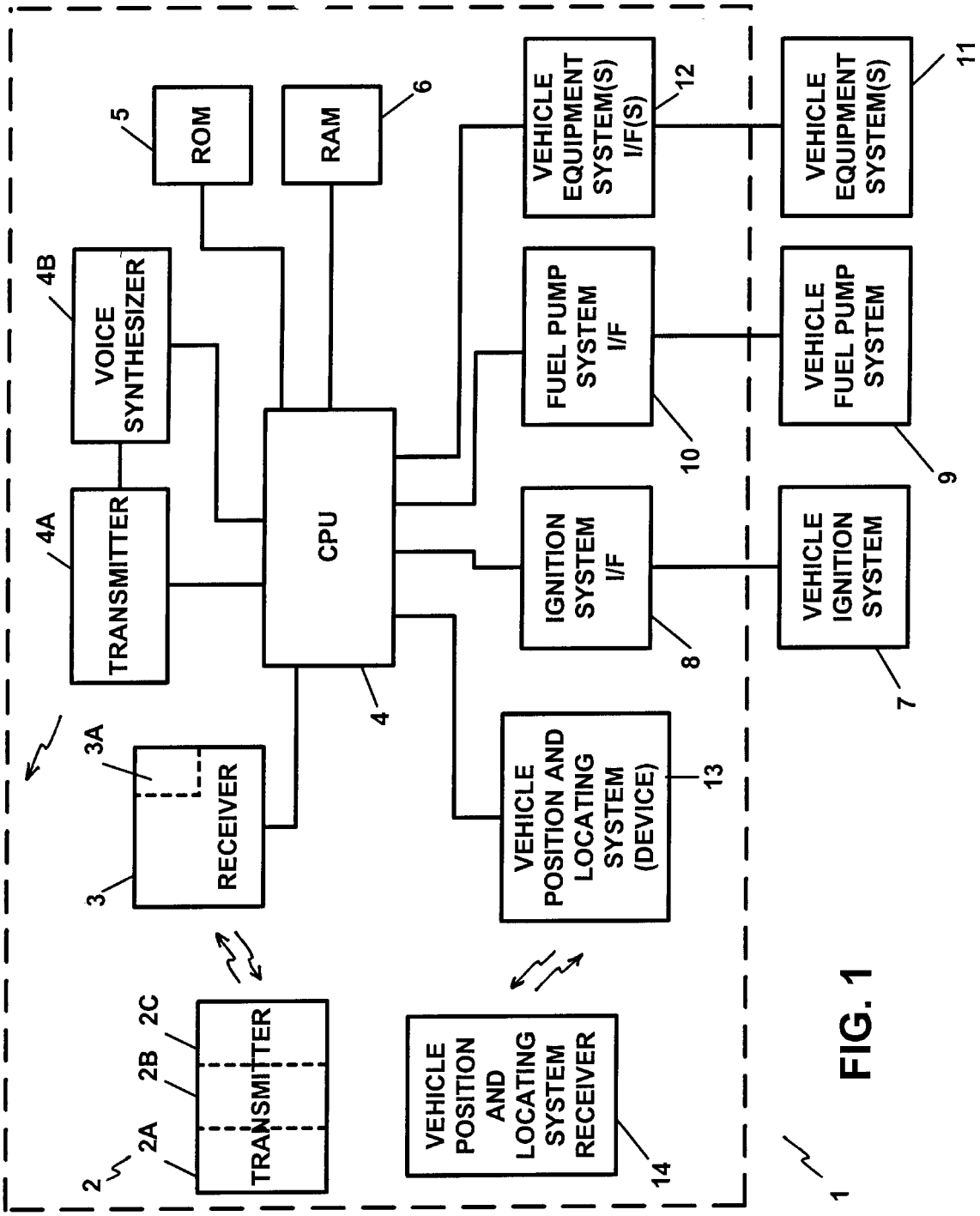
ROM
5
RAM
6
VOICE SYNTHESIZER
4B
TRANSMITTER
4A
CPU
4
RECEIVER
3A
3
TRANSMITTER
2
2A
2B
2C
VEHICLE EQUIPMENT SYSTEM(S) I/F(S)
12
FUEL PUMP SYSTEM I/F
10
IGNITION SYSTEM I/F
8
VEHICLE POSITION AND LOCATING SYSTEM (DEVICE)
13
VEHICLE POSITION AND LOCATING SYSTEM RECEIVER
14
VEHICLE EQUIPMENT SYSTEM(S)
11
VEHICLE FUEL PUMP SYSTEM
9
VEHICLE IGNITION SYSTEM
7
1

FIG. 1

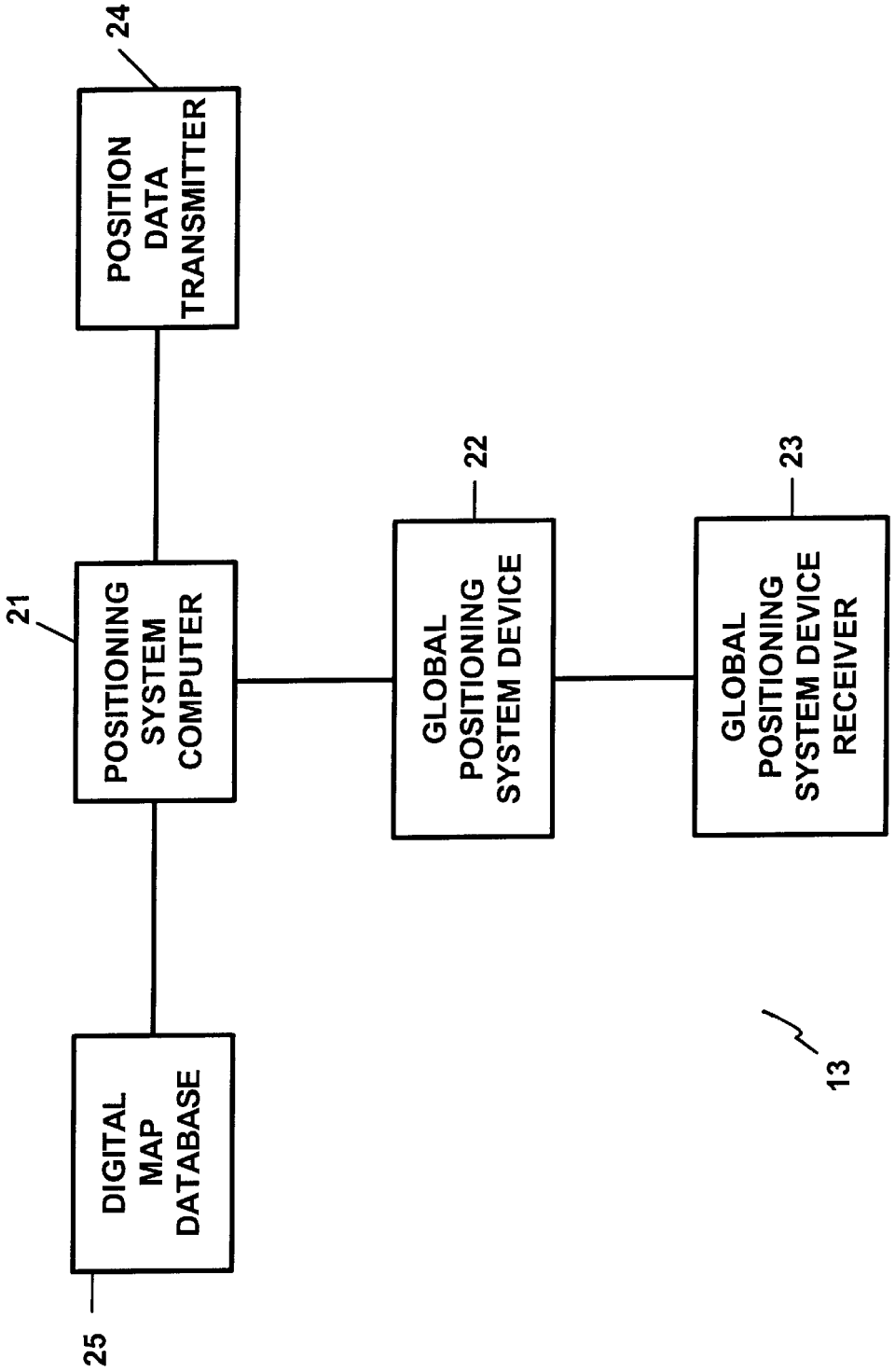
POSITION DATA TRANSMITTER
24
POSITIONING SYSTEM COMPUTER
21
GLOBAL POSITIONING SYSTEM DEVICE
22
GLOBAL POSITIONING SYSTEM DEVICE RECEIVER
23
DIGITAL MAP DATABASE
25
13

FIG. 2