US008840663B2

(12) **United States Patent**
Salahieh et al.

(10) **Patent No.: US 8,840,663 B2**
(45) **Date of Patent: *Sep. 23, 2014**

(54) **REPOSITIONABLE HEART VALVE METHOD**

(75) Inventors: **Amr Salahieh**, Saratoga, CA (US); **Brian D. Brandt**, Santa Clara, CA (US); **Dwight P. Morejohn**, Davis, CA (US); **Ulrich R. Haug**, Campbell, CA (US); **Jean-Pierre Dueri**, Stockton, CA (US); **Hans F. Valencia**, Berkeley, CA (US); **Robert A. Geshlider**, San Francisco, CA (US); **Jeff Krolik**, Campbell, CA (US)

(73) Assignee: **Sadra Medical, Inc.**, Los Gatos, CA (US)

(*) Notice: Subject to any disclaimer, the term of this patent is extended or adjusted under 35 U.S.C. 154(b) by 1576 days.

This patent is subject to a terminal disclaimer.

(21) Appl. No.: **10/746,280**

(22) Filed: **Dec. 23, 2003**

(65) **Prior Publication Data**

US 2005/0137688 A1 Jun. 23, 2005

(51) **Int. Cl.**
A61F 2/24 (2006.01)

(52) **U.S. Cl.**
CPC ***A61F 2/2418*** (2013.01); *A61F 2250/0039* (2013.01); ***A61F 2/2436*** (2013.01); *A61F 2/2415* (2013.01)
USPC **623/2.17**; 623/2.1

(58) **Field of Classification Search**
USPC 623/1.26, 2.1, 2.17
See application file for complete search history.

(56) **References Cited**

U.S. PATENT DOCUMENTS

15,192	A	6/1856	Peale
2,682,057	A	6/1954	Lord
2,701,559	A	2/1955	Cooper
2,832,078	A	4/1958	Williams
3,099,016	A	7/1963	Edwards
3,113,586	A	12/1963	Edmark, Jr.
3,130,418	A	4/1964	Head et al.
3,143,742	A	8/1964	Cromie
3,221,006	A	11/1965	Moore et al.
3,334,629	A	8/1967	Cohn
3,367,364	A	2/1968	Cruz, Jr. et al.

(Continued)

FOREIGN PATENT DOCUMENTS

CN	1338951	A	3/2002
DE	19532846		3/1997

(Continued)

OTHER PUBLICATIONS

Boudjemline, Y. et al., "Percutaneous implantation of a valve in the descending aorta in lambs". Euro. Heart J. (2002) 23:13, 1045-1049.

(Continued)

Primary Examiner — Paul Prebilic
(74) *Attorney, Agent, or Firm* — Vidas, Arrett & Steinkraus, P.A.

(57) **ABSTRACT**

A method for percutaneously replacing a heart valve of a patient. In some embodiments the method includes the steps of percutaneously delivering a replacement valve and an expandable anchor to a vicinity of the heart valve in an unexpanded configuration; expanding the anchor to a deployed configuration in which the anchor contacts tissue at a first anchor site; repositioning the anchor to a second anchor site; and deploying the anchor at the second anchor site.

27 Claims, 62 Drawing Sheets

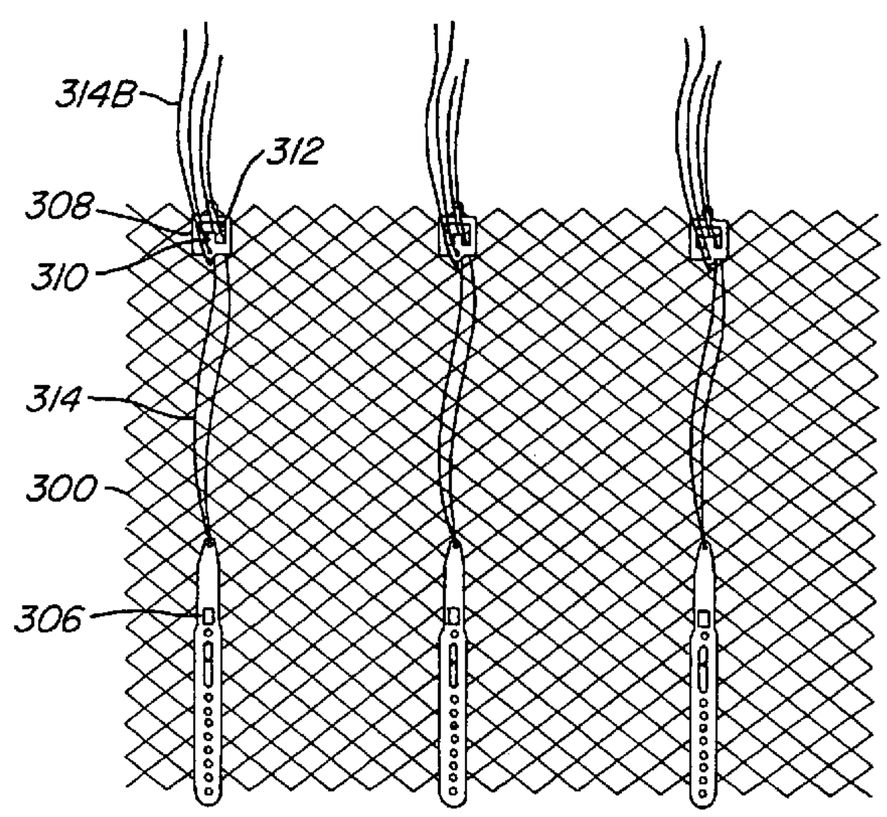

(56) **References Cited**

U.S. PATENT DOCUMENTS

3,409,013 A 11/1968 Berry
3,445,916 A 5/1969 Schulte
3,540,431 A 11/1970 Mobin-Uddin
3,548,417 A 12/1970 Kischer
3,570,014 A 3/1971 Hancock
3,587,115 A 6/1971 Shiley
3,592,184 A 7/1971 Watkins
3,628,535 A 12/1971 Ostrowsky et al.
3,642,004 A 2/1972 Osthagen et al.
3,657,744 A 4/1972 Ersek
3,671,979 A 6/1972 Moulopoulos
3,714,671 A 2/1973 Edwards et al.
3,755,823 A 9/1973 Hancock
3,795,246 A 3/1974 Sturgeon
3,839,741 A 10/1974 Haller
3,868,956 A 3/1975 Alfidi et al.
3,874,388 A 4/1975 King et al.
3,997,923 A 12/1976 Possis
4,035,849 A 7/1977 Angell et al.
4,056,854 A * 11/1977 Boretos et al. 623/2.18
4,106,129 A 8/1978 Carpentier et al.
4,222,126 A 9/1980 Boretos et al.
4,233,690 A 11/1980 Akins
4,265,694 A 5/1981 Boretos et al.
4,291,420 A 9/1981 Reul
4,297,749 A 11/1981 Davis et al.
4,323,358 A 4/1982 Lentz et al.
4,326,306 A 4/1982 Poler
4,339,831 A 7/1982 Johnson
4,343,048 A 8/1982 Ross et al.
4,345,340 A 8/1982 Rosen
4,373,216 A 2/1983 Klawitter
4,406,022 A 9/1983 Roy
4,423,809 A 1/1984 Mazzocco
4,425,908 A 1/1984 Simon
4,470,157 A 9/1984 Love
4,484,579 A 11/1984 Meno et al.
4,501,030 A 2/1985 Lane
4,531,943 A 7/1985 Van Tassel et al.
4,535,483 A 8/1985 Klawitter et al.
4,574,803 A 3/1986 Storz
4,580,568 A 4/1986 Gianturco
4,592,340 A 6/1986 Boyles
4,602,911 A 7/1986 Ahmadi et al.
4,605,407 A 8/1986 Black et al.
4,610,688 A 9/1986 Silvestrini et al.
4,612,011 A 9/1986 Kautzky
4,617,932 A 10/1986 Kornberg
4,643,732 A 2/1987 Pietsch et al.
4,647,283 A 3/1987 Carpentier et al.
4,648,881 A 3/1987 Carpentier et al.
4,655,218 A 4/1987 Kulik et al.
4,655,771 A 4/1987 Wallsten
4,662,885 A 5/1987 DiPisa, Jr.
4,665,906 A 5/1987 Jervis
4,680,031 A 7/1987 Alonso
4,692,164 A 9/1987 Dzemeshkevich et al.
4,705,516 A 11/1987 Barone et al.
4,710,192 A 12/1987 Liotta et al.
4,733,665 A 3/1988 Palmaz
4,755,181 A 7/1988 Igoe
4,759,758 A 7/1988 Gabbay
4,777,951 A 10/1988 Cribier et al.
4,787,899 A 11/1988 Lazarus
4,787,901 A 11/1988 Baykut
4,796,629 A 1/1989 Grayzel
4,819,751 A 4/1989 Shimada et al.
4,829,990 A 5/1989 Thiiorff et al.
4,834,755 A 5/1989 Silvestrini et al.
4,851,001 A 7/1989 Taheri
4,856,516 A 8/1989 Hillstead
4,865,600 A 9/1989 Carpentier et al.
4,872,874 A 10/1989 Taheri
4,873,978 A 10/1989 Ginsburg
4,878,495 A 11/1989 Grayzel
4,878,906 A 11/1989 Lindemann et al.
4,883,458 A 11/1989 Shiber
4,885,005 A 12/1989 Nashef et al.
4,909,252 A 3/1990 Goldberger
4,917,102 A 4/1990 Miller et al.
4,922,905 A 5/1990 Strecker
4,927,426 A 5/1990 Dretler
4,954,126 A 9/1990 Wallsten
4,966,604 A 10/1990 Reiss
4,969,890 A 11/1990 Sugita et al.
4,979,939 A 12/1990 Shiber
4,986,830 A 1/1991 Owens et al.
4,994,077 A 2/1991 Dobben
5,002,556 A 3/1991 Ishida et al.
5,002,559 A 3/1991 Tower
5,007,896 A 4/1991 Shiber
5,026,366 A 6/1991 Leckrone
5,032,128 A 7/1991 Alonso
5,037,434 A 8/1991 Lane
5,047,041 A 9/1991 Samuels
5,064,435 A 11/1991 Porter
5,080,668 A 1/1992 Bolz et al.
5,085,635 A 2/1992 Cragg
5,089,015 A 2/1992 Ross
5,132,473 A 7/1992 Furutaka et al.
5,141,494 A 8/1992 Danforth et al.
5,143,987 A 9/1992 Hansel et al.
5,152,771 A 10/1992 Sabbaghian et al.
5,159,937 A 11/1992 Tremulis
5,161,547 A 11/1992 Tower
5,163,953 A 11/1992 Vince
5,167,628 A 12/1992 Boyles
5,209,741 A 5/1993 Spaeth
5,215,541 A 6/1993 Nashef et al.
5,217,483 A 6/1993 Tower
5,258,042 A 11/1993 Mehta
5,282,847 A 2/1994 Trescony et al.
5,295,958 A 3/1994 Shturman
5,332,402 A 7/1994 Teitelbaum
5,336,258 A 8/1994 Quintero et al.
5,350,398 A 9/1994 Pavcnik et al.
5,360,444 A 11/1994 Kusuhara
5,370,685 A 12/1994 Stevens
5,389,106 A 2/1995 Tower
5,397,351 A 3/1995 Pavcnik et al.
5,409,019 A 4/1995 Wilk
5,411,552 A 5/1995 Andersen et al.
5,425,762 A 6/1995 Muller
5,431,676 A 7/1995 Dubrul et al.
5,443,446 A 8/1995 Shturman
5,443,449 A 8/1995 Buelna
5,443,477 A 8/1995 Marin et al.
5,443,495 A 8/1995 Buscemi et al.
5,443,499 A 8/1995 Schmitt
5,476,506 A 12/1995 Lunn
5,476,510 A 12/1995 Eberhardt et al.
5,480,423 A 1/1996 Ravenscroft et al.
5,480,424 A 1/1996 Cox
5,500,014 A 3/1996 Quijano et al.
5,507,767 A 4/1996 Maeda et al.
5,534,007 A 7/1996 St. Germain et al.
5,545,133 A 8/1996 Burns et al.
5,545,209 A 8/1996 Roberts et al.
5,545,211 A 8/1996 An et al.
5,545,214 A 8/1996 Stevens
5,549,665 A 8/1996 Vesely et al.
5,554,185 A 9/1996 Block et al.
5,571,175 A 11/1996 Vanney et al.
5,571,215 A 11/1996 Sterman et al.
5,573,520 A 11/1996 Schwartz
5,575,818 A 11/1996 Pinchuk
5,591,185 A 1/1997 Kilmer et al.
5,591,195 A 1/1997 Taheri et al.
5,607,464 A 3/1997 Trescony et al.
5,609,626 A 3/1997 Quijano et al.
5,645,559 A 7/1997 Hachtman et al.
5,662,671 A 9/1997 Barbut et al.
5,667,523 A 9/1997 Bynon et al.
5,674,277 A 10/1997 Freitag

(56) **References Cited**

U.S. PATENT DOCUMENTS

5,693,083 A 12/1997 Baker et al.
5,693,310 A 12/1997 Gries et al.
5,695,498 A 12/1997 Tower
5,709,713 A 1/1998 Evans et al.
5,713,951 A 2/1998 Garrison et al.
5,713,953 A 2/1998 Vallana et al.
5,716,370 A 2/1998 Williamson, IV et al.
5,716,417 A 2/1998 Girard et al.
5,720,391 A * 2/1998 Dohm et al. 206/438
5,725,549 A 3/1998 Lam
5,728,068 A 3/1998 Leone et al.
5,733,325 A 3/1998 Robinson et al.
5,735,842 A 4/1998 Krueger et al.
5,749,890 A 5/1998 Shaknovich
5,756,476 A 5/1998 Epstein et al.
5,769,812 A 6/1998 Stevens et al.
5,800,456 A 9/1998 Maeda et al.
5,800,531 A 9/1998 Cosgrove et al.
5,807,405 A 9/1998 Vanney et al.
5,817,126 A 10/1998 Imran
5,824,041 A 10/1998 Lenker et al.
5,824,043 A 10/1998 Cottone, Jr.
5,824,053 A 10/1998 Khosravi et al.
5,824,055 A 10/1998 Spiridigliozzi et al.
5,824,056 A 10/1998 Rosenberg
5,824,064 A 10/1998 Taheri
5,840,081 A 11/1998 Andersen et al.
5,843,158 A 12/1998 Lenker et al.
5,855,597 A 1/1999 Jayaraman
5,855,601 A * 1/1999 Bessler et al. 623/2.38
5,855,602 A 1/1999 Angell
5,860,966 A 1/1999 Tower
5,861,024 A 1/1999 Rashidi
5,861,028 A 1/1999 Angell
5,868,783 A 2/1999 Tower
5,876,419 A 3/1999 Carpenter et al.
5,876,448 A 3/1999 Thompson et al.
5,885,228 A 3/1999 Rosenman et al.
5,888,201 A 3/1999 Stinson et al.
5,891,191 A 4/1999 Stinson
5,895,399 A 4/1999 Barbut et al.
5,906,619 A 5/1999 Olson et al.
5,907,893 A 6/1999 Zadno-Azizi et al.
5,910,154 A 6/1999 Tsugita et al.
5,911,734 A 6/1999 Tsugita et al.
5,925,063 A 7/1999 Khosravi
5,944,738 A 8/1999 Amplatz et al.
5,954,766 A 9/1999 Zadno-Azizi et al.
5,957,949 A * 9/1999 Leonhardt et al. 623/1.24
5,968,070 A 10/1999 Bley et al.
5,984,957 A 11/1999 Laptewicz, Jr. et al.
5,984,959 A 11/1999 Robertson et al.
5,993,469 A 11/1999 McKenzie et al.
5,997,557 A 12/1999 Barbut et al.
6,010,522 A 1/2000 Barbut et al.
6,022,370 A 2/2000 Tower
6,027,520 A 2/2000 Tsugita et al.
6,027,525 A 2/2000 Suh et al.
6,042,598 A 3/2000 Tsugita et al.
6,042,607 A 3/2000 Williamson, IV et al.
6,051,014 A 4/2000 Jang
6,059,827 A 5/2000 Fenton, Jr.
6,074,418 A 6/2000 Buchanan et al.
6,093,203 A 7/2000 Uflacker
6,096,074 A 8/2000 Pedros
6,123,723 A 9/2000 Konya et al.
6,132,473 A 10/2000 Williams et al.
6,142,987 A 11/2000 Tsugita
6,146,366 A 11/2000 Schachar
6,162,245 A 12/2000 Jayaraman
6,165,200 A 12/2000 Tsugita et al.
6,165,209 A 12/2000 Patterson et al.
6,168,579 B1 1/2001 Tsugita
6,168,614 B1 1/2001 Andersen et al.
6,171,327 B1 1/2001 Daniel et al.
6,171,335 B1 1/2001 Wheatley et al.
6,179,859 B1 1/2001 Bates
6,187,016 B1 2/2001 Hedges et al.
6,197,053 B1 3/2001 Cosgrove et al.
6,200,336 B1 3/2001 Pavcnik et al.
6,214,036 B1 4/2001 Letendre et al.
6,221,006 B1 4/2001 Dubrul et al.
6,221,091 B1 4/2001 Khosravi
6,221,096 B1 4/2001 Aiba et al.
6,221,100 B1 4/2001 Strecker
6,231,544 B1 5/2001 Tsugita et al.
6,231,551 B1 5/2001 Barbut
6,241,757 B1 6/2001 An et al.
6,245,102 B1 6/2001 Jayaraman
6,251,135 B1 6/2001 Stinson et al.
6,258,114 B1 7/2001 Konya et al.
6,258,115 B1 7/2001 Dubrul
6,258,120 B1 7/2001 McKenzie et al.
6,267,783 B1 7/2001 Letendre et al.
6,270,513 B1 8/2001 Tsugita et al.
6,277,555 B1 8/2001 Duran et al.
6,299,637 B1 10/2001 Shaolian et al.
6,302,906 B1 10/2001 Goicoechea et al.
6,309,417 B1 10/2001 Spence et al.
6,319,281 B1 11/2001 Patel
6,327,772 B1 12/2001 Zadno-Azizi et al.
6,336,934 B1 1/2002 Gilson et al.
6,336,937 B1 1/2002 Vonesh et al.
6,338,735 B1 1/2002 Stevens
6,346,116 B1 2/2002 Brooks et al.
6,348,063 B1 2/2002 Yassour et al.
6,352,554 B2 3/2002 De Paulis
6,352,708 B1 3/2002 Duran et al.
6,361,545 B1 3/2002 Macoviak et al.
6,363,938 B2 4/2002 Saadat et al.
6,364,895 B1 4/2002 Greenhalgh
6,371,970 B1 4/2002 Khosravi et al.
6,371,983 B1 4/2002 Lane
6,379,383 B1 4/2002 Palmaz et al.
6,398,807 B1 6/2002 Chouinard et al.
6,409,750 B1 6/2002 Hyodoh et al.
6,416,510 B1 7/2002 Altman et al.
6,425,916 B1 7/2002 Garrison et al.
6,440,164 B1 8/2002 DiMatteo et al.
6,454,799 B1 9/2002 Schreck
6,458,153 B1 10/2002 Bailey et al.
6,461,382 B1 10/2002 Cao
6,468,303 B1 10/2002 Amplatz et al.
6,468,660 B2 10/2002 Ogle et al.
6,475,239 B1 11/2002 Campbell et al.
6,482,228 B1 11/2002 Norred
6,485,501 B1 11/2002 Green
6,485,502 B2 11/2002 Don Michael et al.
6,488,704 B1 12/2002 Connelly et al.
6,494,909 B2 12/2002 Greenhalgh
6,503,272 B2 1/2003 Duerig et al.
6,508,833 B2 1/2003 Pavenik
6,527,800 B1 3/2003 McGuckin, Jr. et al.
6,530,949 B2 3/2003 Konya et al.
6,530,952 B2 3/2003 Vesely
6,537,297 B2 3/2003 Tsugita et al.
6,540,768 B1 4/2003 Diaz et al.
6,562,058 B2 5/2003 Seguin et al.
6,569,196 B1 5/2003 Vesely
6,572,643 B1 6/2003 Gharibadeh
6,592,546 B1 7/2003 Barbut et al.
6,592,614 B2 7/2003 Lenker et al.
6,605,112 B1 8/2003 Moll et al.
6,610,077 B1 8/2003 Hancock et al.
6,616,682 B2 9/2003 Joergensen et al.
6,622,604 B1 9/2003 Chouinard et al.
6,623,518 B2 9/2003 Thompson et al.
6,623,521 B2 9/2003 Steinke
6,632,243 B1 10/2003 Zadno-Azizi et al.
6,635,068 B1 10/2003 Dubrul et al.
6,635,079 B2 10/2003 Unsworth et al.
6,652,571 B1 11/2003 White et al.
6,652,578 B2 11/2003 Bailey et al.
6,663,588 B2 12/2003 DuBois et al.

(56) **References Cited**

U.S. PATENT DOCUMENTS

6,663,663 B2 12/2003 Kim et al.
6,669,724 B2 12/2003 Park et al.
6,673,089 B1 1/2004 Yassour et al.
6,673,109 B2 1/2004 Cox
6,676,668 B2 1/2004 Mercereau et al.
6,676,692 B2 1/2004 Rabkin et al.
6,676,698 B2 * 1/2004 McGuckin et al. 623/1.24
6,682,543 B2 1/2004 Barbut et al.
6,682,558 B2 1/2004 Tu et al.
6,682,559 B2 1/2004 Myers et al.
6,685,739 B2 2/2004 DiMatteo et al.
6,689,144 B2 2/2004 Gerberding
6,689,164 B1 2/2004 Seguin
6,692,512 B2 2/2004 Jang
6,695,864 B2 2/2004 Macoviak et al.
6,695,865 B2 2/2004 Boyle et al.
6,702,851 B1 3/2004 Chinn et al.
6,712,842 B1 * 3/2004 Gifford et al. 623/1.13
6,712,843 B2 3/2004 Elliott
6,714,842 B1 3/2004 Ito
6,719,789 B2 4/2004 Cox
6,723,116 B2 4/2004 Taheri
6,730,118 B2 5/2004 Spenser et al.
6,730,377 B2 5/2004 Wang
6,733,525 B2 5/2004 Yang et al.
6,736,846 B2 5/2004 Cox
6,752,828 B2 6/2004 Thornton
6,755,854 B2 6/2004 Gillick et al.
6,758,855 B2 7/2004 Fulton, III et al.
6,764,503 B1 7/2004 Ishimaru
6,764,509 B2 7/2004 Chinn et al.
6,767,345 B2 7/2004 St. Germain et al.
6,769,434 B2 8/2004 Liddicoat et al.
6,773,454 B2 8/2004 Wholey et al.
6,776,791 B1 8/2004 Stallings et al.
6,786,925 B1 9/2004 Schoon et al.
6,790,229 B1 * 9/2004 Berreklouw 623/2.1
6,790,230 B2 9/2004 Beyersdorf et al.
6,790,237 B2 9/2004 Stinson
6,792,979 B2 9/2004 Konya et al.
6,797,002 B2 9/2004 Spence et al.
6,814,746 B2 11/2004 Thompson et al.
6,821,297 B2 11/2004 Snyders
6,830,585 B1 12/2004 Artof et al.
6,837,901 B2 1/2005 Rabkin et al.
6,840,957 B2 1/2005 DiMatteo et al.
6,843,802 B1 1/2005 Villalobos et al.
6,849,085 B2 2/2005 Marton
6,863,668 B2 3/2005 Gillespie et al.
6,866,650 B2 3/2005 Stevens et al.
6,866,669 B2 3/2005 Buzzard et al.
6,872,223 B2 3/2005 Roberts et al.
6,872,226 B2 3/2005 Cali et al.
6,875,231 B2 4/2005 Anduiza et al.
6,881,220 B2 4/2005 Edwin et al.
6,887,266 B2 5/2005 Williams et al.
6,890,340 B2 5/2005 Duane
6,893,459 B1 5/2005 Macoviak
6,893,460 B2 5/2005 Spenser et al.
6,905,743 B1 6/2005 Chen et al.
6,908,481 B2 6/2005 Cribier
6,911,036 B2 6/2005 Douk et al.
6,911,043 B2 6/2005 Myers et al.
6,936,058 B2 8/2005 Forde et al.
6,936,067 B2 8/2005 Buchanan
6,939,352 B2 9/2005 Buzzard et al.
6,951,571 B1 10/2005 Srivastava
6,953,332 B1 10/2005 Kurk et al.
6,964,673 B2 11/2005 Tsugita et al.
6,969,395 B2 11/2005 Eskuri
6,972,025 B2 12/2005 WasDyke
6,974,464 B2 12/2005 Quijano et al.
6,974,474 B2 12/2005 Pavcnik et al.
6,974,476 B2 * 12/2005 McGuckin et al. 623/2.36
6,979,350 B2 12/2005 Moll et al.
6,984,242 B2 1/2006 Campbell et al.
6,989,027 B2 1/2006 Allen et al.
7,004,176 B2 2/2006 Lau
7,011,681 B2 3/2006 Vesely
7,018,406 B2 * 3/2006 Seguin et al. 623/2.1
7,025,791 B2 4/2006 Levine et al.
7,037,331 B2 5/2006 Mitelberg et al.
7,041,132 B2 5/2006 Quijano et al.
7,097,658 B2 8/2006 Oktay
7,122,020 B2 10/2006 Mogul
7,125,418 B2 10/2006 Duran et al.
7,141,063 B2 11/2006 White
7,166,097 B2 1/2007 Barbut
7,175,653 B2 2/2007 Gaber
7,175,654 B2 2/2007 Bonsignore et al.
7,175,656 B2 2/2007 Khairkhahan
7,189,258 B2 3/2007 Johnson et al.
7,191,018 B2 3/2007 Gielen et al.
7,201,772 B2 4/2007 Schwammenthal et al.
7,235,093 B2 6/2007 Gregorich
7,258,696 B2 8/2007 Rabkin et al.
7,267,686 B2 9/2007 DiMatteo et al.
7,276,078 B2 10/2007 Spenser et al.
7,322,932 B2 1/2008 Xie et al.
7,326,236 B2 2/2008 Andreas et al.
7,329,279 B2 2/2008 Haug et al.
7,374,560 B2 5/2008 Ressemann et al.
7,381,219 B2 * 6/2008 Salahieh et al. 623/2.11
7,381,220 B2 6/2008 Macoviak et al.
7,399,315 B2 7/2008 Iobbi
7,445,631 B2 11/2008 Salahieh et al.
7,470,285 B2 12/2008 Nugent et al.
7,491,232 B2 2/2009 Bolduc et al.
7,510,574 B2 3/2009 Le et al.
7,524,330 B2 4/2009 Berreklouw
7,530,995 B2 5/2009 Quijano et al.
7,544,206 B2 6/2009 Cohn
7,622,276 B2 11/2009 Cunanan et al.
7,628,803 B2 12/2009 Pavcnik et al.
7,632,298 B2 12/2009 Hijlkema et al.
7,674,282 B2 3/2010 Wu et al.
7,712,606 B2 5/2010 Salahieh et al.
7,722,638 B2 5/2010 Deyette, Jr. et al.
7,722,662 B2 5/2010 Steinke et al.
7,722,666 B2 5/2010 Lafontaine
7,736,388 B2 6/2010 Goldfarb et al.
7,748,389 B2 7/2010 Salahieh et al.
7,758,625 B2 7/2010 Wu et al.
7,780,725 B2 8/2010 Haug et al.
7,799,065 B2 9/2010 Pappas
7,803,185 B2 9/2010 Gabbay
7,833,262 B2 11/2010 McGuckin, Jr. et al.
7,846,204 B2 12/2010 Letac et al.
7,892,292 B2 2/2011 Stack et al.
8,048,153 B2 * 11/2011 Salahieh et al. 623/2.11
2001/0002445 A1 5/2001 Vesely
2001/0007956 A1 * 7/2001 Letac et al. 623/2.11
2001/0010017 A1 7/2001 Letac et al.
2001/0021872 A1 9/2001 Bailey et al.
2001/0025196 A1 9/2001 Chinn
2001/0032013 A1 10/2001 Marton
2001/0039450 A1 11/2001 Pavcnik et al.
2001/0041928 A1 11/2001 Pavcnik et al.
2001/0041930 A1 11/2001 Globerman et al.
2001/0044634 A1 11/2001 Don Michael et al.
2001/0044652 A1 11/2001 Moore
2001/0044656 A1 * 11/2001 Williamson et al. 623/2.11
2002/0002396 A1 1/2002 Fulkerson
2002/0010489 A1 1/2002 Grayzel et al.
2002/0026233 A1 2/2002 Shaknovich
2002/0029014 A1 3/2002 Jayaraman
2002/0029981 A1 3/2002 Nigam
2002/0032480 A1 3/2002 Spence et al.
2002/0032481 A1 * 3/2002 Gabbay 623/2.11
2002/0042651 A1 4/2002 Liddicoat et al.
2002/0052651 A1 5/2002 Myers et al.
2002/0055767 A1 5/2002 Forde et al.
2002/0055769 A1 5/2002 Wang
2002/0058995 A1 5/2002 Stevens

(56) **References Cited**

U.S. PATENT DOCUMENTS

2002/0077696	A1	6/2002	Zadno-Azizi et al.	
2002/0082609	A1	6/2002	Green	
2002/0095173	A1	7/2002	Mazzocchi et al.	
2002/0095209	A1	7/2002	Zadno-Azizi et al.	
2002/0111674	A1	8/2002	Chouinard et al.	
2002/0120328	A1*	8/2002	Pathak et al.	623/2.2
2002/0123802	A1	9/2002	Snyders	
2002/0138138	A1	9/2002	Yang	
2002/0151970	A1	10/2002	Garrison et al.	
2002/0161390	A1*	10/2002	Mouw	606/200
2002/0161392	A1	10/2002	Dubrul	
2002/0161394	A1	10/2002	Macoviak et al.	
2002/0165576	A1	11/2002	Boyle et al.	
2002/0177766	A1	11/2002	Mogul	
2002/0183781	A1	12/2002	Casey et al.	
2002/0188341	A1	12/2002	Elliott	
2002/0188344	A1	12/2002	Bolea et al.	
2002/0193871	A1	12/2002	Beyersdorf et al.	
2003/0014104	A1	1/2003	Cribier	
2003/0023303	A1	1/2003	Palmaz et al.	
2003/0028247	A1	2/2003	Cali	
2003/0036791	A1	2/2003	Philipp et al.	
2003/0040736	A1	2/2003	Stevens	
2003/0040771	A1	2/2003	Hyodoh et al.	
2003/0040772	A1	2/2003	Hyodoh et al.	
2003/0040791	A1	2/2003	Oktay	
2003/0040792	A1	2/2003	Gabbay	
2003/0050694	A1	3/2003	Yang et al.	
2003/0055495	A1*	3/2003	Pease et al.	623/2.11
2003/0057156	A1	3/2003	Peterson et al.	
2003/0060844	A1	3/2003	Borillo et al.	
2003/0069492	A1	4/2003	Abrams et al.	
2003/0069646	A1	4/2003	Stinson	
2003/0070944	A1	4/2003	Nigam	
2003/0100918	A1	5/2003	Duane	
2003/0100919	A1	5/2003	Hopkins et al.	
2003/0109924	A1	6/2003	Cribier	
2003/0109930	A1	6/2003	Bluni et al.	
2003/0114912	A1	6/2003	Sequin et al.	
2003/0114913	A1	6/2003	Spenser et al.	
2003/0125795	A1	7/2003	Pavcnik et al.	
2003/0130729	A1	7/2003	Paniagua et al.	
2003/0135257	A1	7/2003	Taheri	
2003/0144732	A1	7/2003	Cosgrove et al.	
2003/0149475	A1	8/2003	Hyodoh et al.	
2003/0149476	A1	8/2003	Damm et al.	
2003/0149478	A1	8/2003	Figulla et al.	
2003/0153974	A1	8/2003	Spenser et al.	
2003/0165352	A1	9/2003	Ibrahim et al.	
2003/0176884	A1	9/2003	Berrada et al.	
2003/0181850	A1	9/2003	Diamond et al.	
2003/0187495	A1	10/2003	Cully et al.	
2003/0191516	A1	10/2003	Weldon et al.	
2003/0199913	A1	10/2003	Dubrul et al.	
2003/0199971	A1	10/2003	Tower et al.	
2003/0199972	A1	10/2003	Zadno-Azizi et al.	
2003/0208224	A1	11/2003	Broome	
2003/0212429	A1	11/2003	Keegan et al.	
2003/0212452	A1	11/2003	Zadno-Azizi et al.	
2003/0212454	A1	11/2003	Scott et al.	
2003/0216774	A1	11/2003	Larson	
2003/0225445	A1	12/2003	Derus et al.	
2003/0229390	A1	12/2003	Ashton et al.	
2003/0233117	A1	12/2003	Adams et al.	
2004/0019374	A1	1/2004	Hojeibane et al.	
2004/0034411	A1	2/2004	Quijano	
2004/0039436	A1	2/2004	Spenser et al.	
2004/0049224	A1	3/2004	Buehlmann et al.	
2004/0049226	A1	3/2004	Keegan et al.	
2004/0049262	A1	3/2004	Obermiller	
2004/0049266	A1	3/2004	Anduiza et al.	
2004/0059409	A1	3/2004	Stenzel	
2004/0073198	A1	4/2004	Gilson et al.	
2004/0082904	A1	4/2004	Houde et al.	
2004/0082967	A1	4/2004	Broome et al.	
2004/0087982	A1	5/2004	Eskuri	
2004/0088045	A1	5/2004	Cox	
2004/0093016	A1	5/2004	Root et al.	
2004/0093060	A1	5/2004	Seguin et al.	
2004/0097788	A1	5/2004	Mourlas et al.	
2004/0098022	A1	5/2004	Barone	
2004/0098098	A1	5/2004	McGuckin, Jr. et al.	
2004/0098099	A1	5/2004	McCullagh et al.	
2004/0098112	A1	5/2004	DiMatteo et al.	
2004/0107004	A1	6/2004	Levine et al.	
2004/0111096	A1	6/2004	Tu et al.	
2004/0116951	A1	6/2004	Rosengart	
2004/0117004	A1	6/2004	Osborne et al.	
2004/0117009	A1	6/2004	Cali et al.	
2004/0122468	A1	6/2004	Yodfat et al.	
2004/0122516	A1	6/2004	Fogarty et al.	
2004/0127936	A1	7/2004	Salahieh et al.	
2004/0127979	A1	7/2004	Wilson et al.	
2004/0133274	A1	7/2004	Webler et al.	
2004/0138694	A1	7/2004	Tran et al.	
2004/0138742	A1	7/2004	Myers et al.	
2004/0138743	A1	7/2004	Myers et al.	
2004/0148018	A1	7/2004	Carpentier et al.	
2004/0148021	A1	7/2004	Cartledge et al.	
2004/0153094	A1	8/2004	Dunfee et al.	
2004/0158277	A1	8/2004	Lowe et al.	
2004/0167565	A1	8/2004	Beulke et al.	
2004/0167620	A1	8/2004	Ortiz et al.	
2004/0181140	A1	9/2004	Falwell et al.	
2004/0186558	A1	9/2004	Pavcnik et al.	
2004/0186563	A1	9/2004	Lobbi	
2004/0193261	A1	9/2004	Berreklouw	
2004/0199245	A1	10/2004	Lauterjung	
2004/0204755	A1	10/2004	Robin	
2004/0210304	A1	10/2004	Seguin et al.	
2004/0210306	A1	10/2004	Quijano et al.	
2004/0210307	A1	10/2004	Khairkhahan	
2004/0215331	A1*	10/2004	Chew et al.	623/1.21
2004/0215333	A1	10/2004	Duran et al.	
2004/0215339	A1	10/2004	Drasler et al.	
2004/0220655	A1	11/2004	Swanson et al.	
2004/0225321	A1	11/2004	Krolik et al.	
2004/0225353	A1	11/2004	McGuckin, Jr. et al.	
2004/0225354	A1	11/2004	Allen et al.	
2004/0225355	A1	11/2004	Stevens	
2004/0243221	A1	12/2004	Fawzi et al.	
2004/0254636	A1	12/2004	Flagle et al.	
2004/0260390	A1	12/2004	Sarac et al.	
2005/0010287	A1	1/2005	Macoviak et al.	
2005/0021136	A1	1/2005	Xie et al.	
2005/0033398	A1	2/2005	Seguin	
2005/0033402	A1	2/2005	Cully et al.	
2005/0043711	A1	2/2005	Corcoran et al.	
2005/0043757	A1	2/2005	Arad et al.	
2005/0043790	A1	2/2005	Seguin	
2005/0049692	A1	3/2005	Numamoto et al.	
2005/0049696	A1	3/2005	Siess et al.	
2005/0055088	A1	3/2005	Liddicoat et al.	
2005/0060016	A1	3/2005	Wu et al.	
2005/0060029	A1	3/2005	Le et al.	
2005/0065594	A1	3/2005	DiMatteo et al.	
2005/0075584	A1	4/2005	Cali	
2005/0075662	A1	4/2005	Pedersen et al.	
2005/0075712	A1	4/2005	Biancucci et al.	
2005/0075717	A1	4/2005	Nguyen et al.	
2005/0075719	A1	4/2005	Bergheim	
2005/0075724	A1	4/2005	Svanidze et al.	
2005/0075730	A1	4/2005	Myers et al.	
2005/0075731	A1	4/2005	Artof et al.	
2005/0085841	A1	4/2005	Eversull et al.	
2005/0085842	A1	4/2005	Eversull et al.	
2005/0085843	A1	4/2005	Opolski et al.	
2005/0085890	A1	4/2005	Rasmussen et al.	
2005/0090846	A1	4/2005	Pedersen et al.	
2005/0090890	A1	4/2005	Wu et al.	
2005/0096692	A1	5/2005	Linder et al.	
2005/0096734	A1	5/2005	Majercak et al.	
2005/0096735	A1	5/2005	Hojeibane et al.	
2005/0096736	A1	5/2005	Osse et al.	

(56) **References Cited**

U.S. PATENT DOCUMENTS

2005/0096738	A1	5/2005	Cali et al.
2005/0100580	A1	5/2005	Osborne et al.
2005/0107822	A1	5/2005	WasDyke
2005/0113910	A1	5/2005	Paniagua et al.
2005/0131438	A1	6/2005	Cohn
2005/0137683	A1	6/2005	Hezi-Yamit et al.
2005/0137686	A1	6/2005	Salahieh et al.
2005/0137687	A1	6/2005	Salahieh et al.
2005/0137688	A1	6/2005	Salahieh et al.
2005/0137689	A1	6/2005	Salahieh et al.
2005/0137690	A1	6/2005	Salahieh et al.
2005/0137691	A1	6/2005	Salahieh et al.
2005/0137692	A1	6/2005	Haug et al.
2005/0137693	A1	6/2005	Haug et al.
2005/0137694	A1	6/2005	Haug et al.
2005/0137695	A1	6/2005	Salahieh et al.
2005/0137696	A1	6/2005	Salahieh et al.
2005/0137697	A1	6/2005	Salahieh et al.
2005/0137698	A1	6/2005	Salahieh et al.
2005/0137699	A1	6/2005	Salahieh et al.
2005/0137701	A1	6/2005	Salahieh et al.
2005/0137702	A1	6/2005	Haug et al.
2005/0143807	A1	6/2005	Pavcnik et al.
2005/0143809	A1	6/2005	Salahieh et al.
2005/0149159	A1	7/2005	Andreas et al.
2005/0165352	A1	7/2005	Henry et al.
2005/0165477	A1	7/2005	Anduiza et al.
2005/0165479	A1	7/2005	Drews et al.
2005/0182486	A1	8/2005	Gabbay
2005/0197694	A1	9/2005	Pai et al.
2005/0197695	A1	9/2005	Stacchino et al.
2005/0203549	A1	9/2005	Realyvasquez
2005/0203614	A1	9/2005	Forster
2005/0203615	A1	9/2005	Forster
2005/0203616	A1	9/2005	Cribier
2005/0203617	A1	9/2005	Forster et al.
2005/0203618	A1	9/2005	Sharkawy et al.
2005/0209580	A1	9/2005	Freyman
2005/0228472	A1	10/2005	Case et al.
2005/0228495	A1	10/2005	Macoviak
2005/0234546	A1	10/2005	Nugent et al.
2005/0240200	A1	10/2005	Bergheim
2005/0240262	A1	10/2005	White
2005/0251250	A1	11/2005	Verhoeven et al.
2005/0251251	A1	11/2005	Cribier
2005/0261759	A1	11/2005	Lambrecht et al.
2005/0267560	A1	12/2005	Bates
2005/0283231	A1	12/2005	Haug et al.
2005/0283962	A1	12/2005	Boudjemline
2006/0004439	A1	1/2006	Spenser et al.
2006/0004442	A1	1/2006	Spenser et al.
2006/0015168	A1	1/2006	Gunderson
2006/0058872	A1	3/2006	Salahieh et al.
2006/0149360	A1	7/2006	Schwammenthal et al.
2006/0155312	A1	7/2006	Levine et al.
2006/0161249	A1	7/2006	Realyvasquez et al.
2006/0173524	A1	8/2006	Salahieh et al.
2006/0195183	A1	8/2006	Navia et al.
2006/0253191	A1	11/2006	Salahieh et al.
2006/0259134	A1 *	11/2006	Schwammenthal et al. . 623/2.11
2006/0271166	A1	11/2006	Thill et al.
2006/0287668	A1	12/2006	Fawzi et al.
2007/0010876	A1	1/2007	Salahieh et al.
2007/0010877	A1	1/2007	Salahieh et al.
2007/0016286	A1	1/2007	Herrmann et al.
2007/0055340	A1	3/2007	Pryor
2007/0061008	A1	3/2007	Salahieh et al.
2007/0112355	A1	5/2007	Salahieh et al.
2007/0118214	A1	5/2007	Salahieh et al.
2007/0162107	A1	7/2007	Haug et al.
2007/0173918	A1	7/2007	Dreher et al.
2007/0203503	A1	8/2007	Salahieh et al.
2007/0244552	A1	10/2007	Salahieh et al.
2007/0288089	A1	12/2007	Gurskis et al.
2008/0009940	A1	1/2008	Cribier
2008/0082165	A1	4/2008	Wilson et al.
2008/0125859	A1	5/2008	Salahieh et al.
2008/0188928	A1	8/2008	Salahieh et al.
2008/0208328	A1	8/2008	Antocci et al.
2008/0208332	A1	8/2008	Lamphere et al.
2008/0221672	A1	9/2008	Lamphere et al.
2008/0234814	A1	9/2008	Salahieh et al.
2008/0269878	A1	10/2008	Iobbi
2008/0288054	A1	11/2008	Pulnev et al.
2009/0005863	A1	1/2009	Goetz et al.
2009/0030512	A1	1/2009	Thielen et al.
2009/0054969	A1	2/2009	Salahieh et al.
2009/0076598	A1	3/2009	Salahieh et al.
2009/0171456	A1	7/2009	Kveen et al.
2009/0222076	A1	9/2009	Figulla et al.
2009/0264759	A1	10/2009	Byrd
2009/0264997	A1	10/2009	Haug et al.
2009/0299462	A1	12/2009	Fawzi et al.
2010/0049313	A1	2/2010	Alon et al.
2010/0094399	A1	4/2010	Dorn et al.
2010/0121434	A1	5/2010	Paul et al.
2010/0219092	A1	9/2010	Salahieh et al.
2010/0280495	A1	11/2010	Paul et al.
2013/0018457	A1	1/2013	Gregg et al.
2013/0158656	A1	6/2013	Sutton
2013/0304199	A1	11/2013	Sutton et al.
2014/0018911	A1	1/2014	Zhou et al.

FOREIGN PATENT DOCUMENTS

DE	19546692		6/1997
DE	19857887		7/2000
DE	19907646		8/2000
DE	10049812		4/2002
DE	10049813		4/2002
DE	10049814		4/2002
DE	10049815		4/2002
EP	0103546		5/1988
EP	0144167		11/1989
EP	0597967		5/1994
EP	0409929	B1	4/1997
EP	0850607		7/1998
EP	1000590	A1	5/2000
EP	1 057 460	A1	12/2000
EP	1057459		12/2000
EP	1088529		4/2001
EP	1 340 473	A2	9/2003
EP	0937439	B1	9/2003
EP	1356793		10/2003
EP	1042045	B1	5/2004
EP	0819013		6/2004
EP	1435879		7/2004
EP	1439800		7/2004
EP	1589902		8/2004
EP	1605871		9/2004
EP	1472996		11/2004
EP	1229864	B1	4/2005
EP	1430853	A3	6/2005
EP	1059894	B1	7/2005
EP	1551274	A2	7/2005
EP	1551336	A1	7/2005
EP	1078610	B1	8/2005
EP	1562515	A1	8/2005
EP	1570809		9/2005
EP	1576937	A2	9/2005
EP	1582178	A2	10/2005
EP	1582179	A2	10/2005
EP	1469797		11/2005
EP	1600121		11/2005
EP	1156757	B1	12/2005
EP	1616531		1/2006
FR	2788217		7/2000
GB	2056023		3/1981
GB	2398245		8/2004
SU	1271508		11/1986
SU	1371700	A1	2/1988
WO	9117720		11/1991
WO	9217118		10/1992
WO	9301768		2/1993

(56) **References Cited**

FOREIGN PATENT DOCUMENTS

WO	WO 93/15693	A1	8/1993	
WO	WO 95/04556		2/1995	
WO	WO 95/29640		11/1995	
WO	WO 96/14032		5/1996	
WO	WO 96/24306	A1	8/1996	
WO	9640012		12/1996	
WO	9829057		7/1998	
WO	WO 98/36790		8/1998	
WO	WO 98/50103	A1	11/1998	
WO	WO 98/57599	A2	12/1998	
WO	9933414		7/1999	
WO	9940964		8/1999	
WO	9947075		9/1999	
WO	WO 99/44542	A2	9/1999	
WO	WO 00/09059		2/2000	
WO	WO 00/47139	A1 *	2/2000	..... A61F 2/24
WO	0041652		7/2000	
WO	00/45874		8/2000	
WO	0044311		8/2000	
WO	WO 00/44308		8/2000	
WO	WO 00/44313		8/2000	
WO	WO 00/49970	A1	8/2000	
WO	WO 00/67661		11/2000	
WO	WO 01/05331		1/2001	
WO	WO 01/08596	A1	2/2001	
WO	WO 01/10320	A1	2/2001	
WO	WO 01/10343	A1	2/2001	
WO	WO 01/35870	A1	5/2001	
WO	WO 01/49213	A2 *	7/2001	..... A61F 2/06
WO	0154625		8/2001	
WO	0162189		8/2001	
WO	WO 01/64137	A1	9/2001	
WO	01097715		12/2001	
WO	02041789		5/2002	
WO	WO 02/36048	A1	5/2002	
WO	WO 02/41789	A2	5/2002	
WO	02043620		6/2002	
WO	02047575		6/2002	
WO	WO 02/100297		12/2002	
WO	WO 03/003943	A2	1/2003	
WO	WO 03/003949	A2	1/2003	
WO	WO 03/011195		2/2003	
WO	WO03/030776	A2	4/2003	
WO	03094793		11/2003	
WO	WO 03/015851		11/2003	
WO	WO03/094797		11/2003	
WO	2004014256		2/2004	
WO	WO 2004/019811	A2	3/2004	
WO	WO 2004/023980	A2	3/2004	
WO	2004026117		4/2004	
WO	WO 2004/041126		5/2004	
WO	WO 2004/047681		6/2004	
WO	2004058106		7/2004	
WO	2004066876		8/2004	
WO	2004082536		9/2004	
WO	2004089250		10/2004	
WO	2004089253		10/2004	
WO	2004093728		11/2004	
WO	2004105651		12/2004	
WO	2005002466		1/2005	
WO	2005004753		1/2005	
WO	2005009285		2/2005	
WO	2005011534		2/2005	
WO	2005011535		2/2005	
WO	2005023155		3/2005	
WO	2005027790		3/2005	
WO	2005046528		5/2005	
WO	2005046529		5/2005	
WO	2005048883		6/2005	
WO	2005062980		7/2005	
WO	2005065585		7/2005	
WO	2005087140		9/2005	
WO	WO 2005/084595	A1	9/2005	
WO	2005096993		10/2005	
WO	2006009690		1/2006	
WO	2006/027499		3/2006	
WO	2006138391		12/2006	
WO	2007033093		3/2007	
WO	2007035471		3/2007	
WO	2007044285		4/2007	
WO	2007053243		5/2007	
WO	2007058847		5/2007	
WO	2007092354		8/2007	
WO	2007097983		8/2007	
WO	2010042950		4/2010	

OTHER PUBLICATIONS

Boudjemline, Y. et al., "Percutaneous pulmonary valve replacement in a large right ventricular outflow tract: an experimental study", Journal of the Americal College of Cardiology, (2004), vol. 43, No. 6, pp. 1082-1087.

Cribier, A. et al., "Early Experience with Percutaneous Transcatheter Implantation of Heart Valve Prosthesis for the Treatment of End-Stage Inoperable Patients with Calcific Aortic Stenosis". J. or Am. Coll. of Cardio. (2004) 43:4, 698-703.

Hijazi, Z.M., "Transcatheter Valve Replacement: A New Era of Percutaneous Cardiac Intervention Begins". J. of Am. College of Cardio. (2004) 43:6, 1088-1089.

Huber, C.H. et al., "Do valved stents compromise coronary flow?", European Jouranl of Cardio-thoracic Surgery, (2004), vol. 25, pp. 754-759.

Paniagua, D. et al., Heart Watch (2004), Spring, 2004 Edition, Texas Heart Institute.

Stuart, M., "In Heart Valves, A Brave, New Non-Surgical World". Start-Up (2004) 9-17.

Vahanian, A. et al., "Percutaneous Approaches to Valvular Disease". Circulation (2004) 109, 1572-1579.

Boudjemline, Y. et al., "Steps Toward Percutaneous Aortic Valve Replacement," *Circulation* (2002) pp. 775-778.

Boudjemline, Y. et al., " Percutaneous Implantation of a Biological Valve in the Aorta to Treat Aortic Valve Insufficiency—A Sheep Study," *Med. Sci. Monti* (2002) vol. 8, No. 4, pp. BR113-116.

Andersen, H.R. et al., "Transluminal implantation of artificial heart valves. Description of a new expandable aortic valve and initial results with implantation by catheter technique in closed chest pigs". Euro. Heart J. (1992) 13:704-708.

Atwood, A. et al., "Insertion of Heart Valves by Catheterization". Project Supervised by Prof. Y. Muftu of Northeaster University (2001-2002) 36-40.

Bodnar, E. et al., Replacement Cardiac Valves, Pergamon Publishing Corporation, New York, (1991), 307-322.

Boudjemline, Y. et al., "Percutaneous valve insertion: A new approach?" J. of Thoracic and Cardio. Surg. (2003) 125:3, 741-743.

Cribier, A., et al., "Percutaneous Transcatheter Implantation of an Aortic Valve Prosthesis for Calcific Aortic Stenosis: First Human Case Description," Circulation (2002) 3006-3008.

Cribier, A., et al., "Percutaneous Transcatheter Implantation of an Aortic Valve Prosthesis for Calcific Aortic Stenosis: First Human Case". Percutaneous Valve Technologies, Inc. (2002).

Ferrari, M. et al., "Percutaneous transvascular aortic valve replacement with self expanding stent-valve device". Poster from the presentation given at SMIT 2000, 12th International Conference (Sep. 5, 2000).

Knudsen, L. L. et al., "Catheter-implanted prosthetic heart valves". Int'l J. of Art. Organs, (1993) 16:5, 253-263.

Kort, S. et al., "Minimally invasive aortic valve replacement: Echocardiographic and clinical results". Am. Heart J. (2001) 142:3, 476-481.

Love, C. et al., The Autogenous Tissue Heart Valve: Current Status, Journal of Caridac Surgery, (1991) 6:4, 499-507.

Lutter, G. et al., "Percutaneous aortic valve replacement: An experimental study. I. Studies on implantation," J. of Thoracic and Cardio. Surg. (2002) 123:4, 768-776.

Moulopoulos, S. D. et al., "Catheter-Mounted Aortic Valves," Annals of Thoracic Surg. (1971) 11:5, 423-430.

(56) **References Cited**

OTHER PUBLICATIONS

Paniagua, D. et al., "Percutaneous heart valve in the chronic in vitro testing model". Circulation (2002), 106:e51-e52, American heart Association, Inc.
Pavcnik, D. et al., "Percutaneous bioprosthetic venous valve: A long-term study in sheep". J. of Vascular Surg. (2002) 35:3, 598-603.
Phillips, S. J. at al., "A Temporary Catheter-Tip Aortic Valve: Hemodynamic Effects on Experimental Acute Aortic Insufficiency". Annals of Thoracic Surg. (1976) 21:2, 134-136.
Sochman, J. et al., "Percutaneous Transcatheter Aortic Disc Valve Prosthesis Implantation: A Feasibility Study". Cardiovasc. Intervent. Radiol. (2000) 23, 384-388.
Van Her Werden, L. A. et al., "Percutaneous valve implantation: back to the future?" Euro. Heart J. (2002) 23:18, 1415-1416.
Zhou, J. Q. et al., "Self-expandable valved stent of large size: off-bypass implantation in pulmonary position". Eur. J. Cardiothorac. (2003) 24, 212-216.
Salahieh, A. et al. U.S. Appl. No. 10/893,131 entitled "Methods and apparatus for endovascularly replacing a patient's heart valve", filed Jul. 15, 2004.
Salahieh, A. et al. U.S. Appl. No. 10/893,151, entitled "Methods and apparatus for endovascularly replacing a patient's heart valve", filed Jul. 15, 2004.
Salahieh, A. et al. U.S. Appl. No. 10/893,143, entitiled "Methods and apparatus for endovascularly replacing a patient's heart valve", filed Jul. 15, 2004.
Salahieh, A. et al. U.S. Appl. No. 10/893,142, entitled "Methods and apparatus for endovascularly replacing a patient's heart valve", filed Jul. 15, 2004.
Salahieh, A. et al. U.S. Appl. No. 10/920,736, entitled "Apparatus and methods for protecting embolization during endovascular heart replacement", filed Aug. 17, 2004.
Salhieh, A. et al., U.S. Appl. No. 10/746,240, entitled "Heart valve anchor and method", filed Dec. 23, 2003.
Salhieh, A. et al., U.S. Appl. No. 10/972,287, entitled "Leaflet engagement elements and methods for use thereof", filed Oct. 21, 2004.
Salhieh, A. et al., U.S. Appl. No. 10/971,535, entitled "Leaflet engagement elements and methods for use thereof", filed Oct. 21, 2004.
Salhieh, A. et al., U.S. Appl. No. 10/746,120, entitled "Externally expandable heart valve anchor and method", filed Dec. 23, 2003.
Salhieh, A. et al., U.S. Appl. No. 10/982,388, entitled "Methods and apparatus for endovascularly replacing a heart valve", filed Nov. 5, 2004.
Salhieh, A. et al., U.S. Appl. No. 10/746,285, entitled "Retrievable heart valve anchor and method", filed Dec. 23, 2003.
Salhieh, A. et al., U.S. Appl. No. 10/982,692, entitled "Retrievable heart valve anchor and method", filed Nov. 5, 2004.
Salhieh, A. et al., U.S. Appl. No. 10/746,887, entitled "Low profile heart valve and delivery system", filed Dec. 23, 2003.
Salhieh, A. et al., U.S. Appl. No. 10/746,872, entitled "Locking heart valve anchor", filed Dec. 23, 2003.
Salhieh, A. et al., U.S. Appl. No. 10/911,059, entitled "Replacement valve and anchor", filed Aug. 3, 2004.
Salhieh, A. et al., U.S. Appl. No. 10/746,942, entitled "Two-piece heart valve and anchor", filed Dec. 23, 2003.
Salhieh, A. et al., U.S. Appl. No. 10/870,340, entitled "Everting heart valve", filed Jun. 16, 2004.
Fawzi, et al., U.S. Appl. No. 11/155,309, entitled "Apparatus and methods for intravascular embolic protection," filed Jun. 16, 2005.
Salahieh, et al., U.S. Appl. No. 11/232,441, entitled "Methods and apparatus for endovascular heart valve replacement comprising tissue grasping elements," filed Sep. 20, 2005.
Salahieh, et al., U.S. Appl. No. 11/232,444, entitled "Methods and apparatus for endovascular heart valve replacement comprising tissue grasping elements," filed Sep. 20, 2005.
Salahieh, et al., U.S. Appl. No. 11/274,889, entitled "Medical implant deployment tool," filed Nov. 14, 2005.
Salahieh, et al., U.S. Appl. No. 11/314,183, entitled "Medical Device Delivery," filed Dec. 20, 2005.
Salahieh, et al., U.S. Appl. No. 11/314,969, entitled "Methods and Apparatus for Performing Valvuloplasty," filed Dec. 20, 2005.
Salahieh, et al., U.S. Appl. No. 11/275,912, entitled "Medical Implant Delivery and Deployment Tool," filed Feb. 2, 2006.
Salahieh, et al., U.S. Appl. No. 11/275,913, entitled "Two-Part Package for Medical Implant," filed Feb. 2, 2006.
Paul et al.; U.S. Appl. No. 12/578,447 entitled "Medical Devices and Delivery Systems for Delivering Medical Devices," filed Oct. 13, 2009.
VentureBeatProfiles, Claudio Argento, Jan. 7, 2010, http://venturebeatprofiles.com/person/profile/claudio-argento.
Heart Valve Materials—Bovine (cow), Equine & Porcine Pericardium, Maverick Biosciences Pty. Ltd, Jan. 7, 2011, http://www.maverickbio.com/biological-medical-device-materials.php?htm.
Hourihan, Maribeth, et al., Transcatheter Umbrella Closure of Valvular and Paravalvular Leaks, Nov. 15, 1992, 1371-7, vol. 20, No. 6, JACC, Boston Massachusetts.
Pericardial Heart Valves, Edwards Lifesciences, Cardiovascular Surgery FAQ, Nov. 14, 2010, http://www.edwards.com/products/cardiovascularsurgeryfaq.htm.
Examiner's First Report on AU Patent Application No. 2011202667, issued on May 17, 2012.
Aug. 19, 2011, Supplemental Search Report from EP Patent Office, EP Application No. 04815634.3.
Aug. 19, 2011, Supplemental Search Report from EP Patent Office, EP Application No. 04813777.2.
Atwood, A. et al., "Insertion of Heart Valves by Catheterization". The Capstone Design Course Report. MIME 1501-1502. Technical Design Report. Northeastern University. Nov. 5, 2007. pp. 1-93.
Cunliffe, H.R. et al., Glutaraldehyde Inactivation of Exotic Animal Viruses in Swine Heart Tissue, May 1979, 1044-1046, vol. 37, No. 5., Applied and Environmental Microbiology, Greenport, New York.
EP Search Report mailed Aug. 10, 2011 for EP Application No. 06824992.9
Levy, Charles, M.D., *Mycobacterium chelonei* Infection of Porcine Heart Valves, Sep. 22, 1977, vol. 297, No. 12, The New England Journal of Medicine, Washington, D.C.
Oct. 24, 2011, Supplemental Search Report from EP Patent office, EP Application No. 05758878.2.
Kort, S. et al., "Minimally invasive aortic valve replacement", America Heart Journal, vol. 142, No. 3, Sep. 2001 issue.
Charles S. Love, B.A., et al. "The Autogenous Tissue Heart Valve", Journal of Cardiac Surgery, vol. 6, No. 4. Dec. 1991 issue.
Georg Lutter et al., "Percutaneous aortic valve replacement: An experimental study," Journal of Thoracic and Cardiovascular Surgery, vol. 123, No. 4, Apr. 2002 issue.
David Paniagua et al., "Percutaneous Heart Valve in the Chronic In Vitro Testing Model," Circulation, Journal of the American Heart Association, Sep. 2002.
Mary Stuart, "In Heart Valves, A Brave, New, Non-Surgical World". Feb. 2004 issue.
Steven R. Bailey, "Percutaneous Expandable Prosthetic Valves", Textbook of Interventional Cardiology. Copyright dates 1990 and 1994.
L. A. Van Herwerden and P. W. Serruys, "Percutaneous valve implantation: back to the future?" European Heart Journal, vol. 23, issue 18, Sep. 2002 issue.
Crystal M. Cunanan et al., "Tissue Characterization and Calcification Potential of Commercial Bioprosthetic Heart Valves," The Annals of Thoracic Surgery, vol. 71, issue 5, pp. S417-S421, May 2001 issue.
Paolo Stassano et al., "Mid-term results of the valve-on-valve technique for bioprosthetic failure," European Journal of Cardio-Thoracic Surgery, vol. 18, issue 4, pp. 453-457, Oct. 2000 issue.
Papers from file history of U.S. Appl. No. 10/746,285, filed Dec. 23, 2003.

* cited by examiner

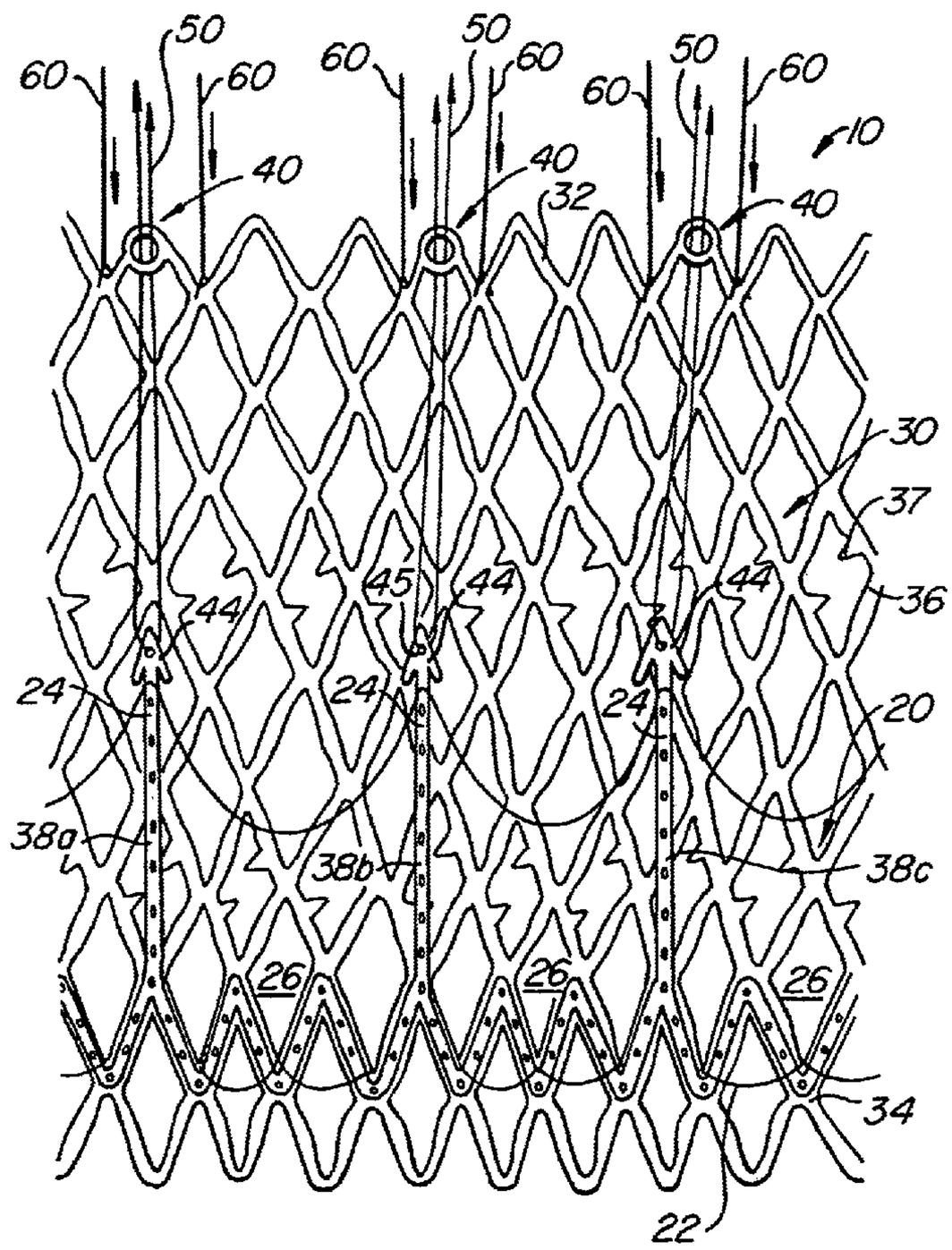
60
50
60
40
32
10
30
37
36
45
44
24
20
38a
38b
38c
26
34
22

FIG. 1A

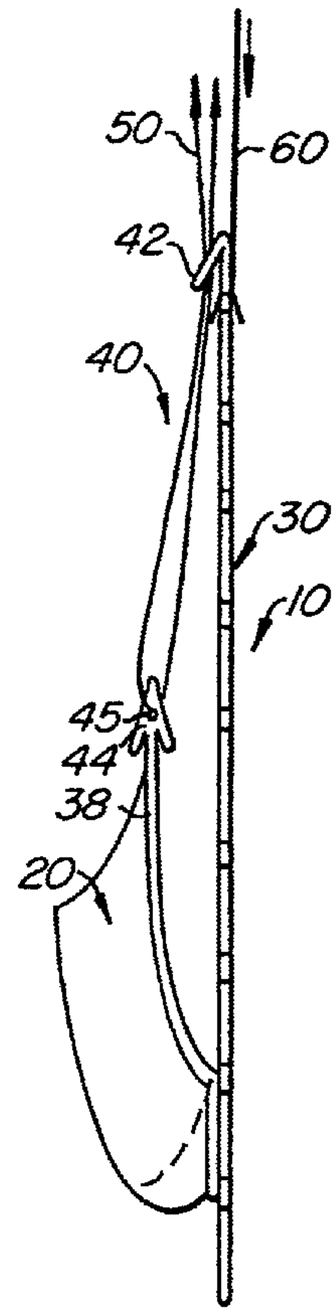
50
60
42
40
30
10
45
44
38
20

FIG. 2A

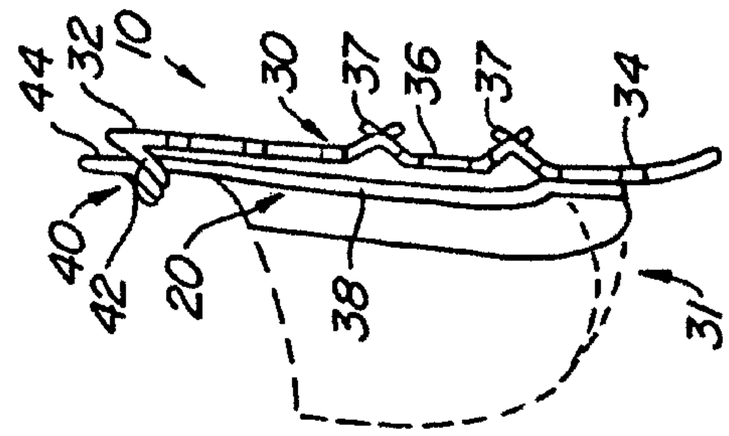
44
32
10
30
37
36
37
34
40
42
20
38
31

FIG. 2B

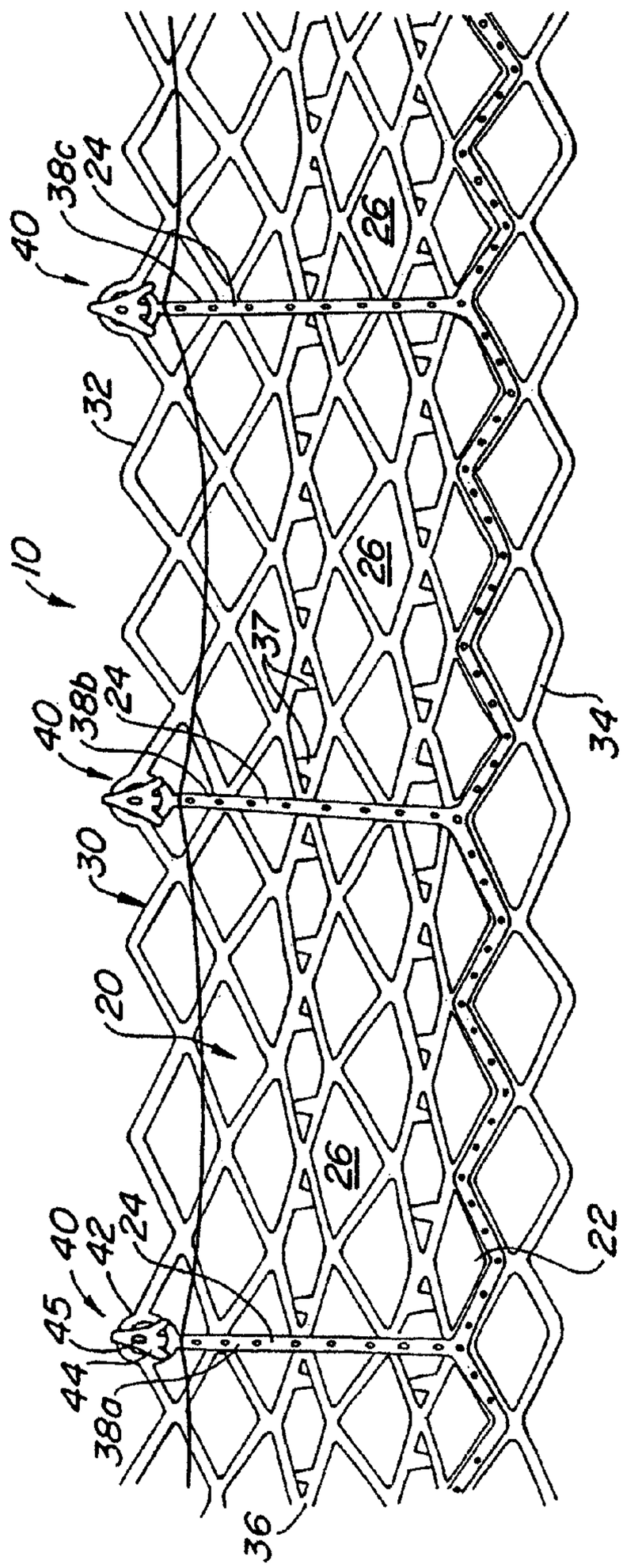
40
38c
24
26
32
10
26
37
40
38b
24
34
30
20
26
40
42
24
45
44
38a
36
22

FIG. 1B

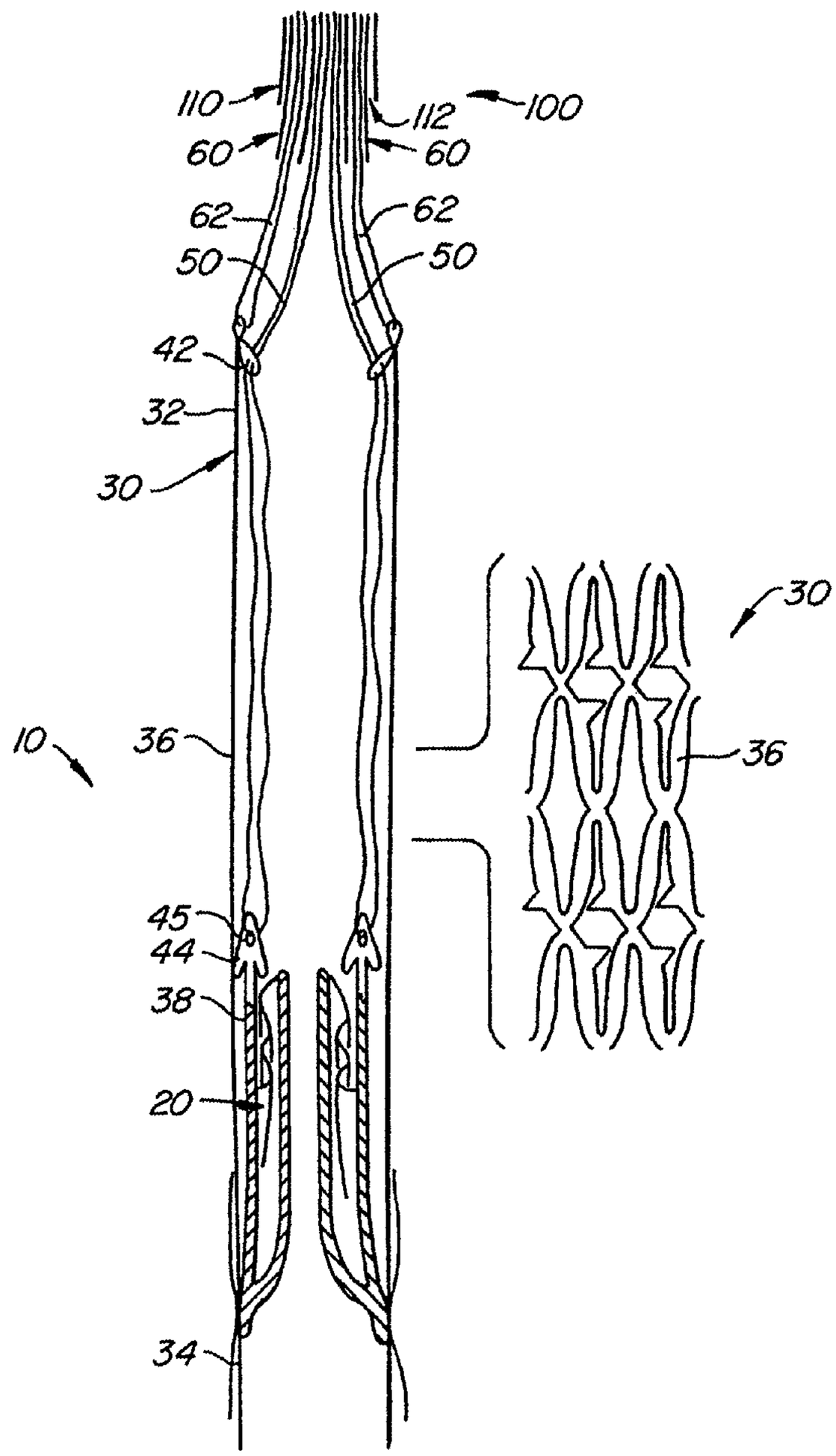

FIG. 3A

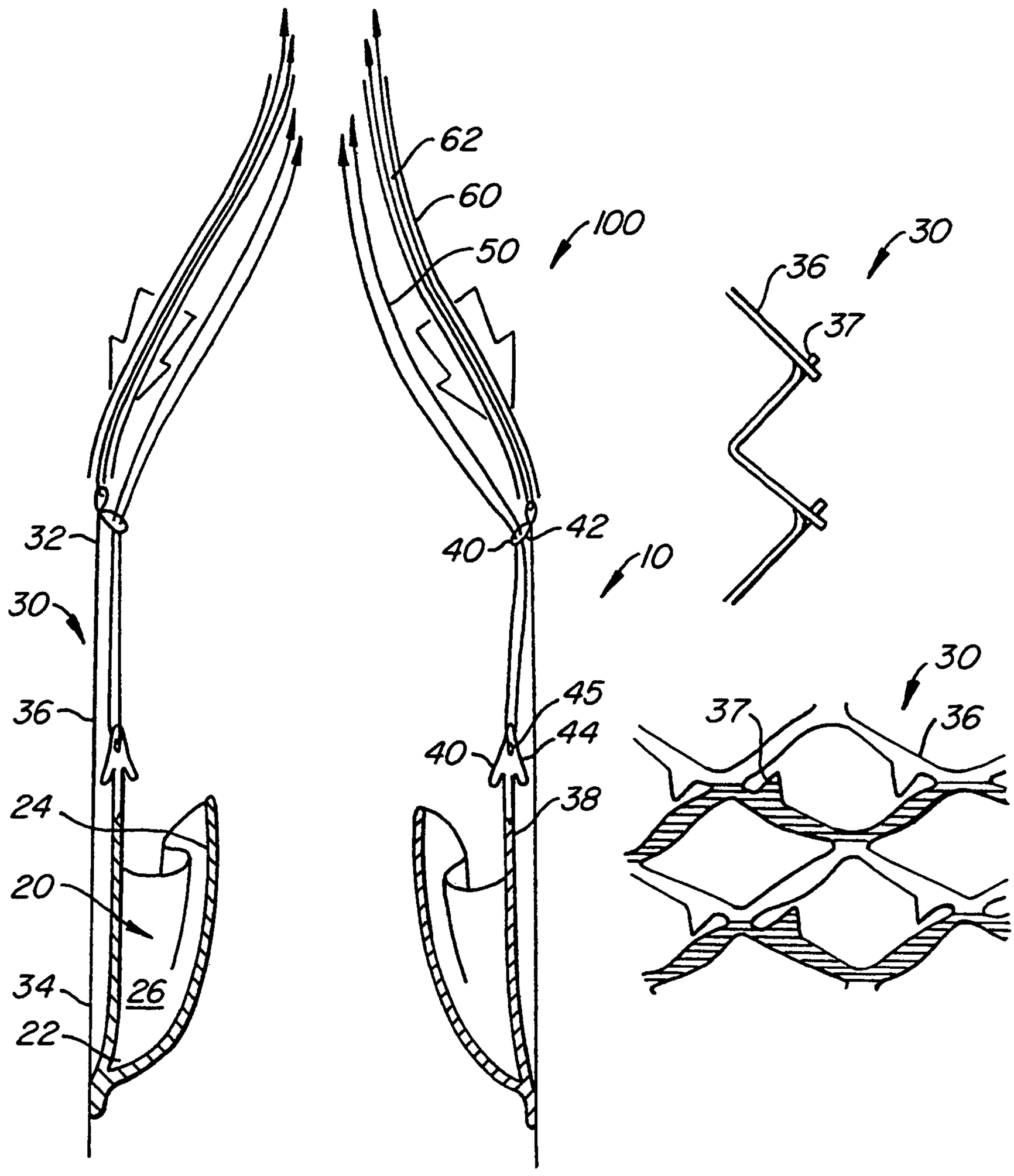
62
60
100
50
30
36
37
32
40
42
10
30
30
36
45
44
37
36
40
38
24
20
34
26
22

FIG. 3B

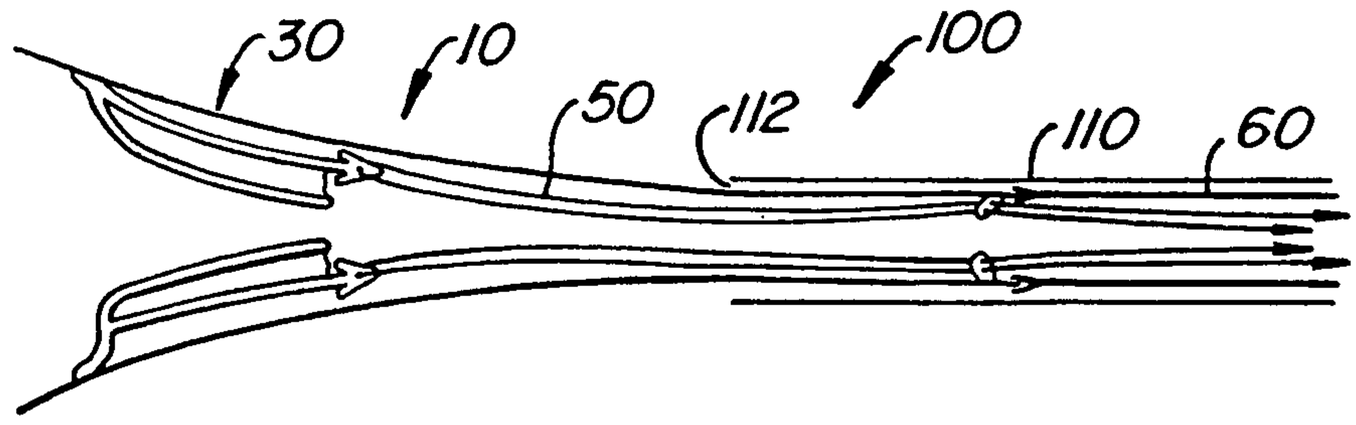

FIG. 4A

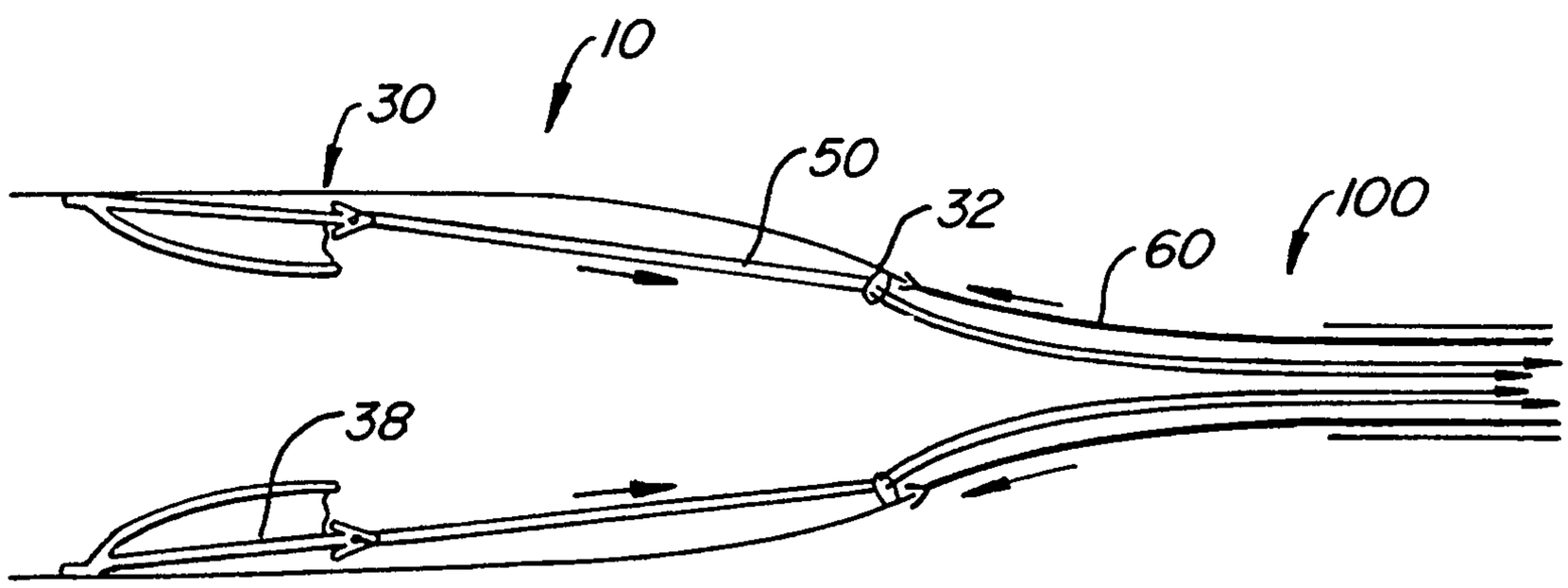

FIG. 4B

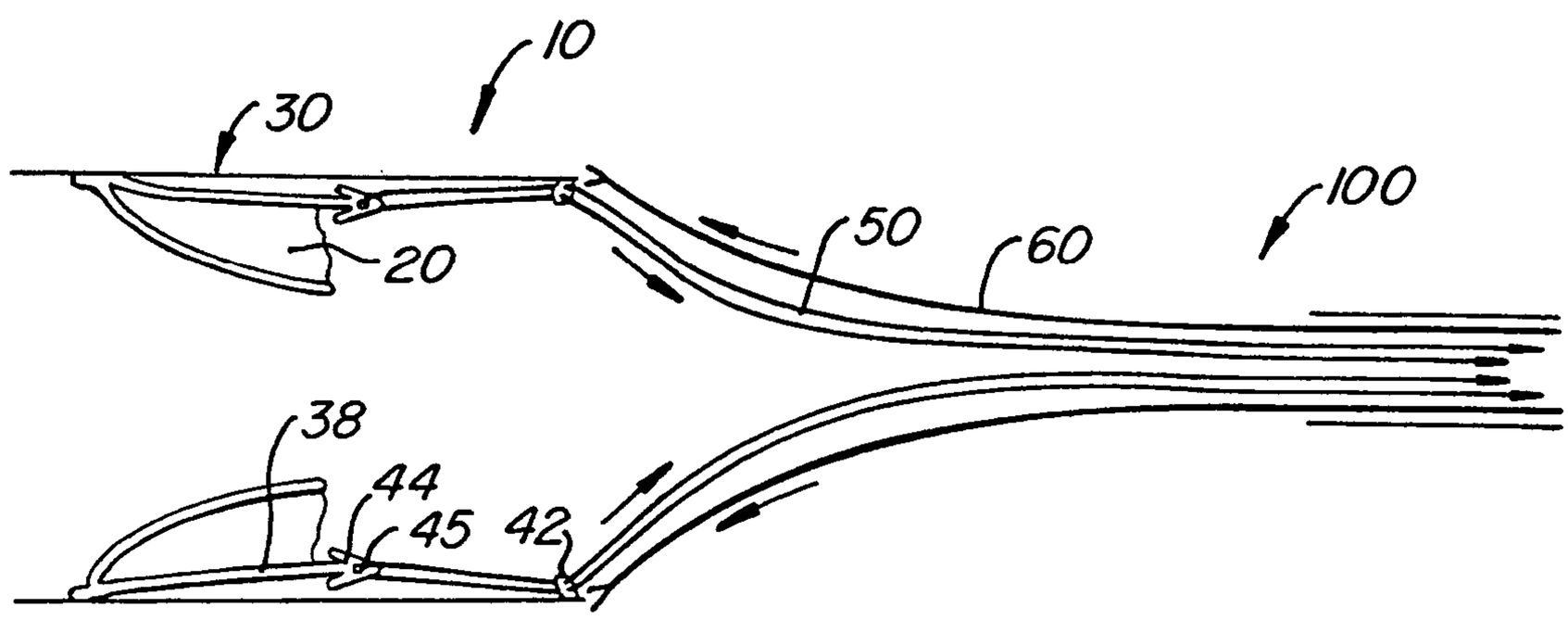

FIG. 4C

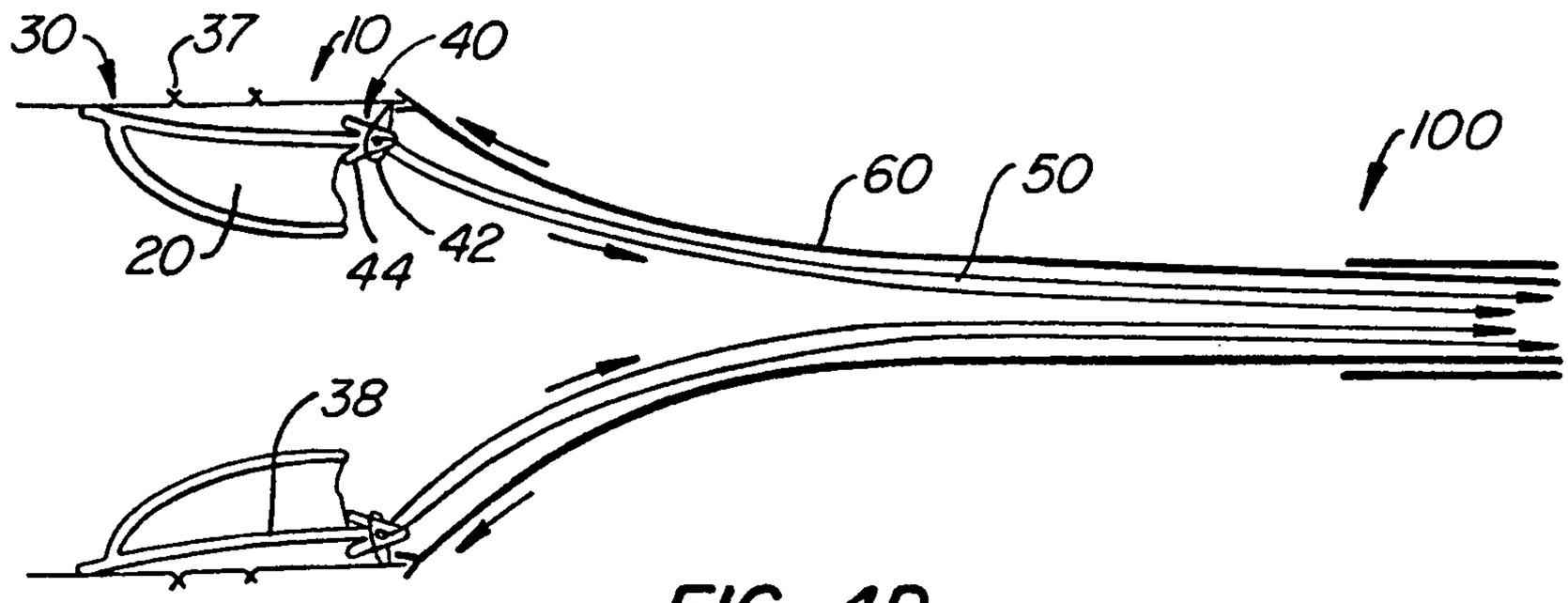

FIG. 4D

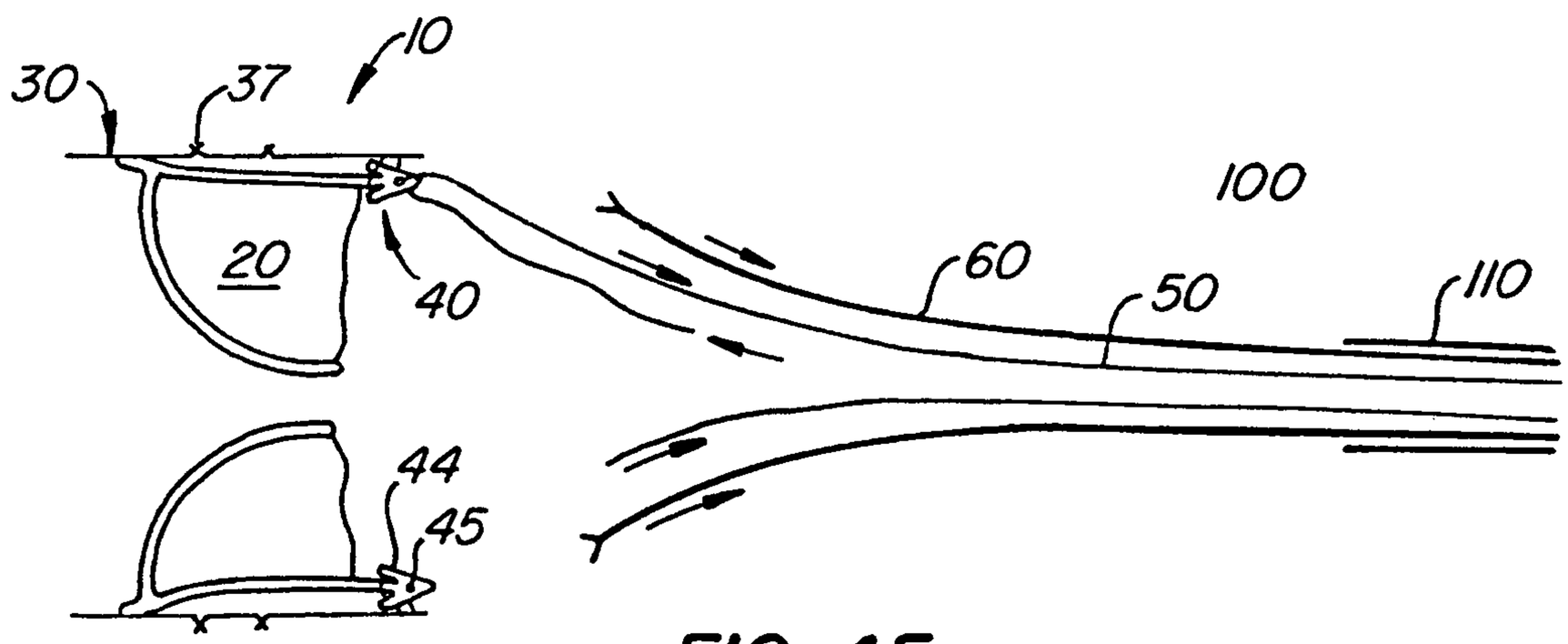

FIG. 4E

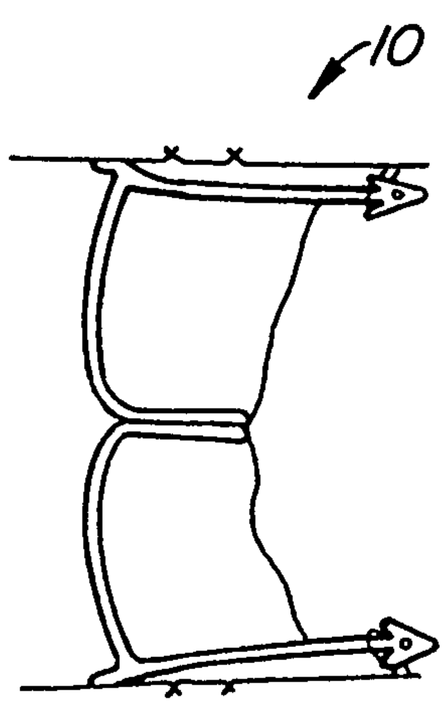

FIG. 4F

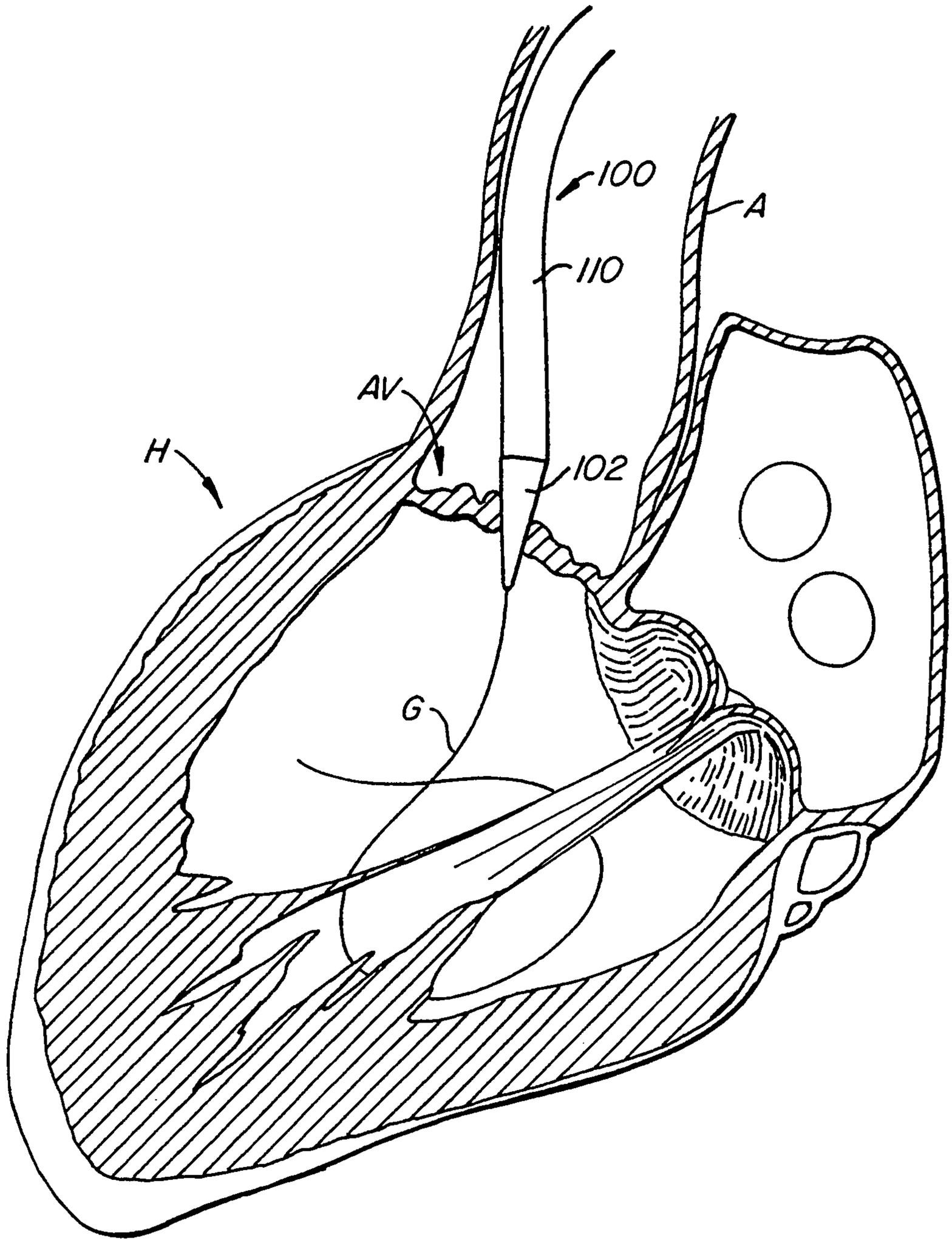

FIG. 5A

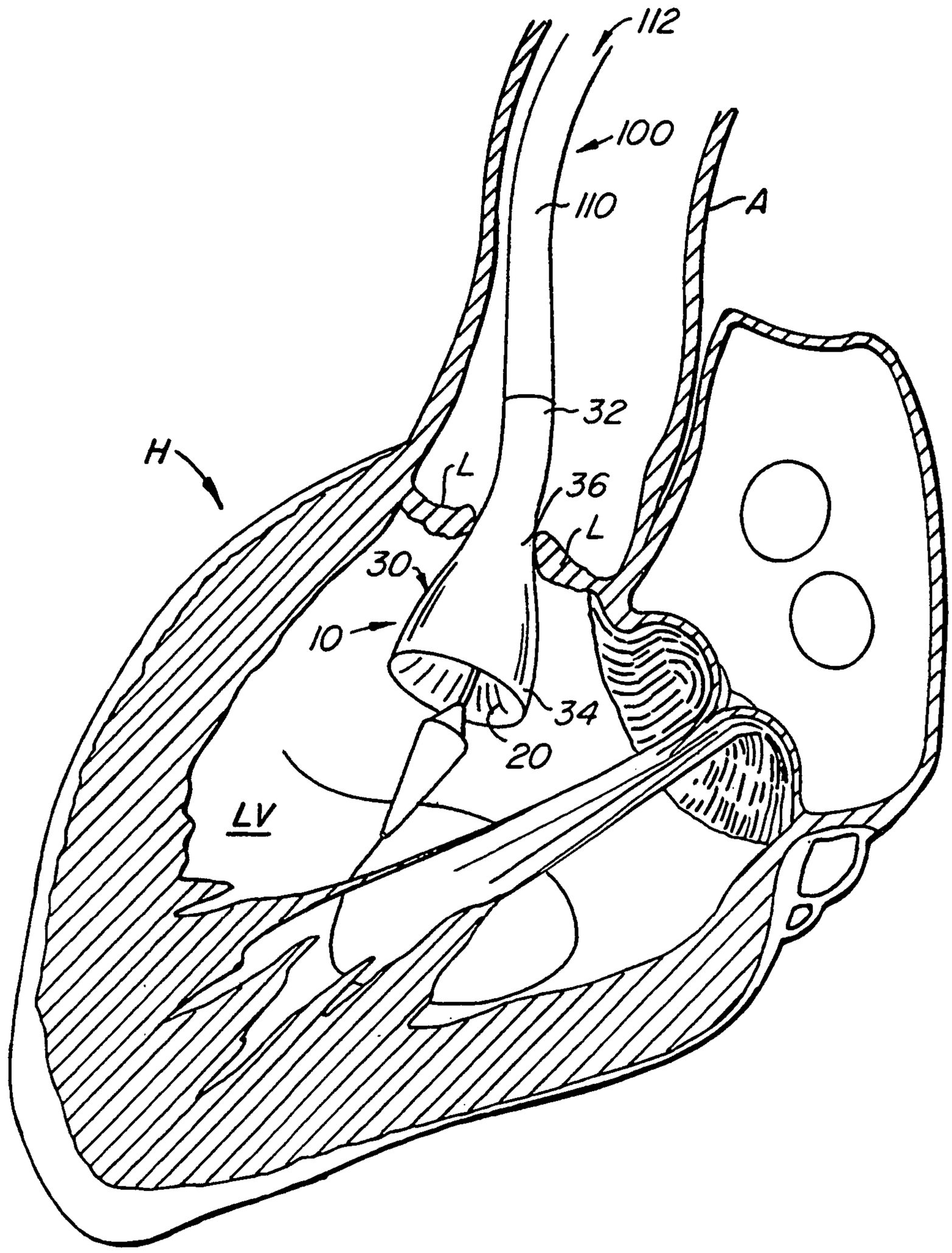

FIG. 5B

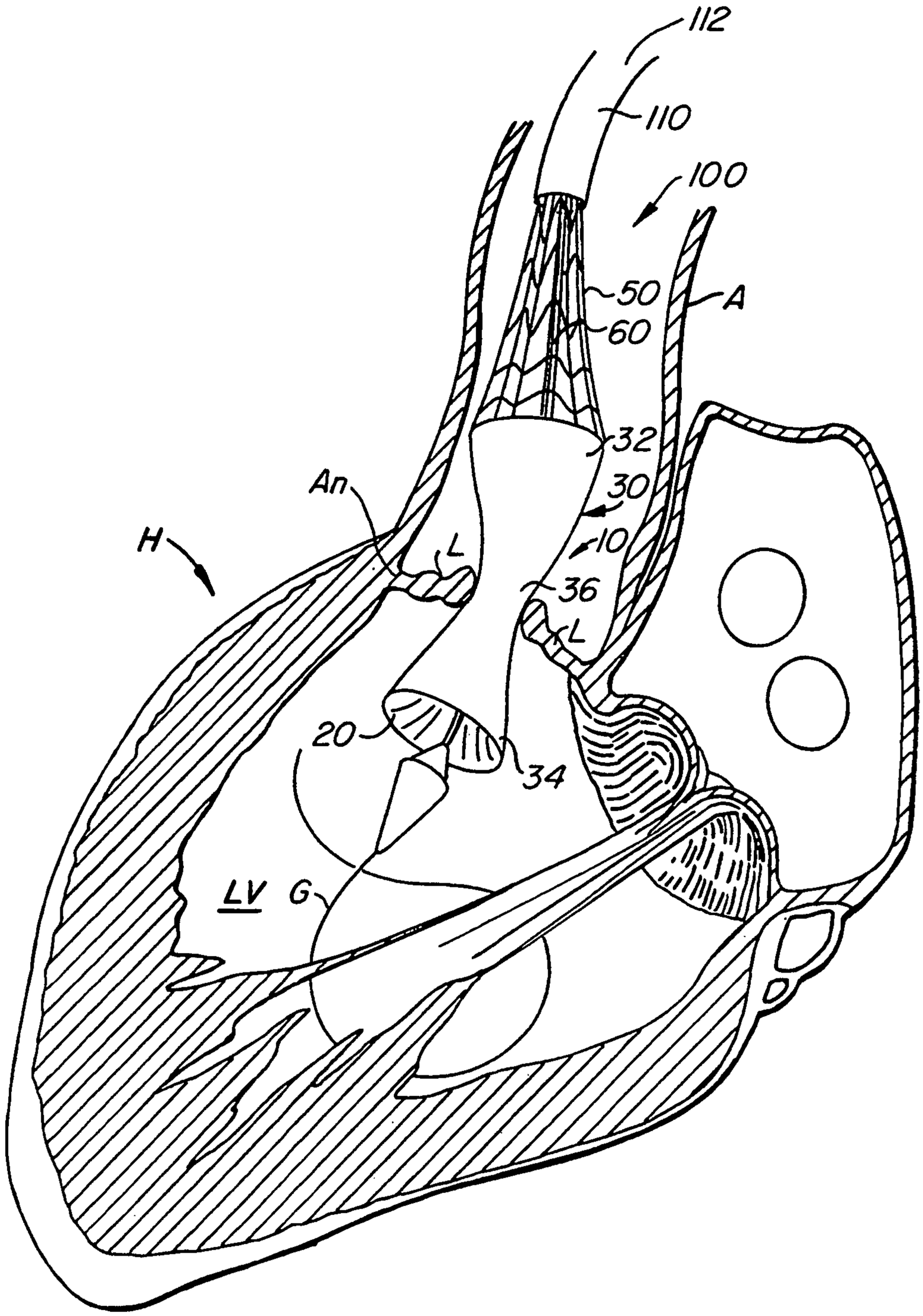

FIG. 5C

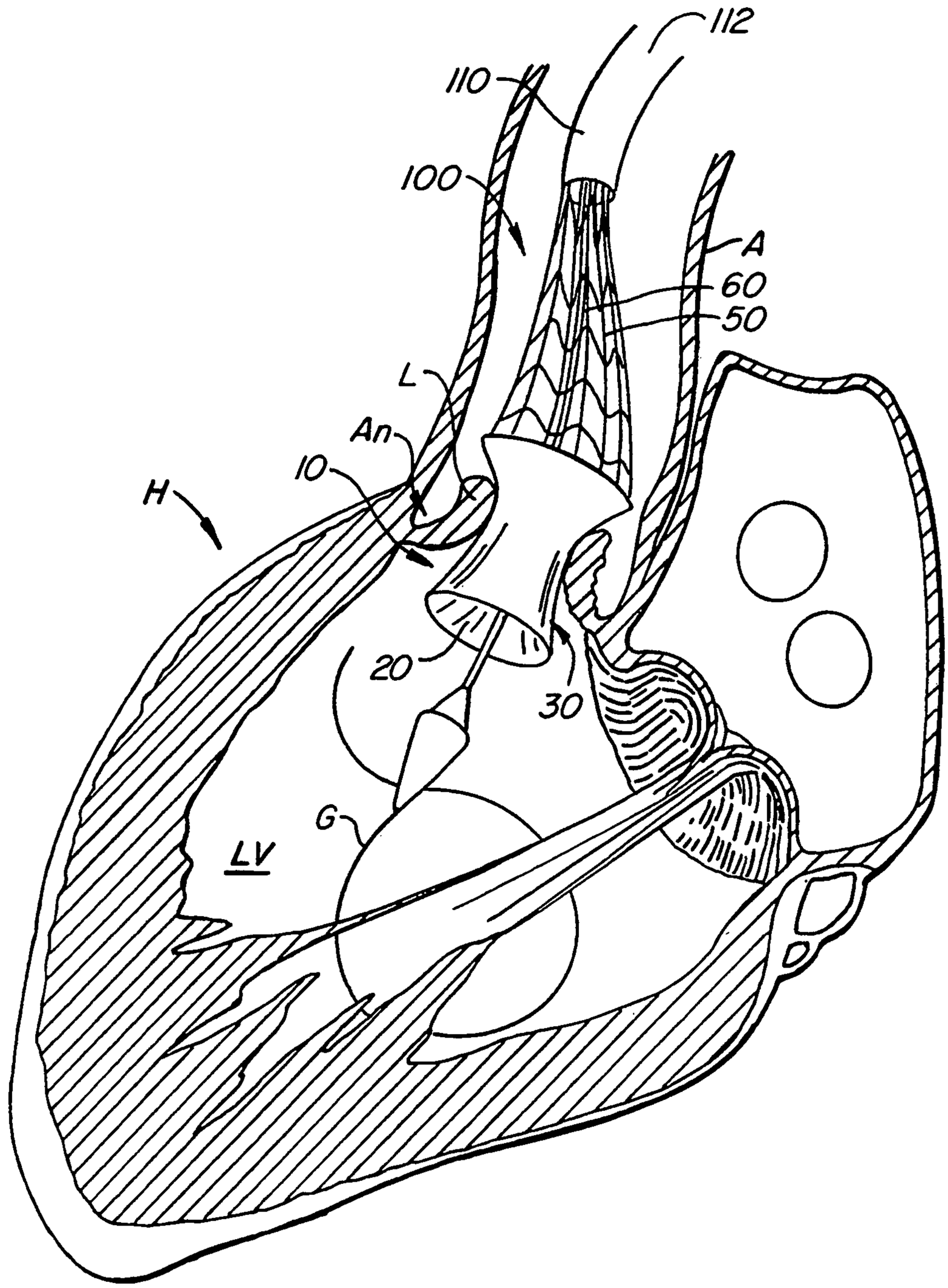

FIG. 5D

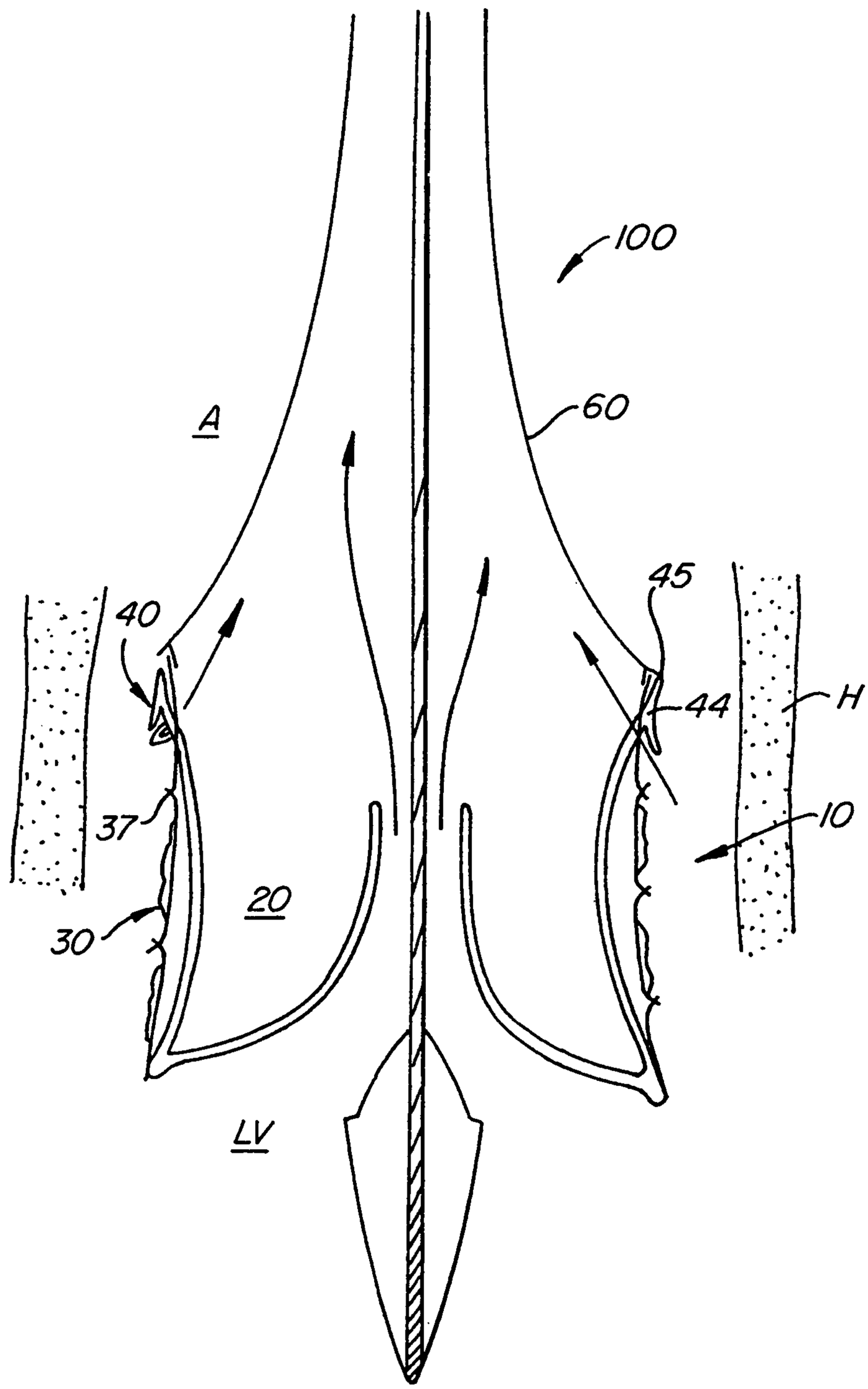

FIG. 5E

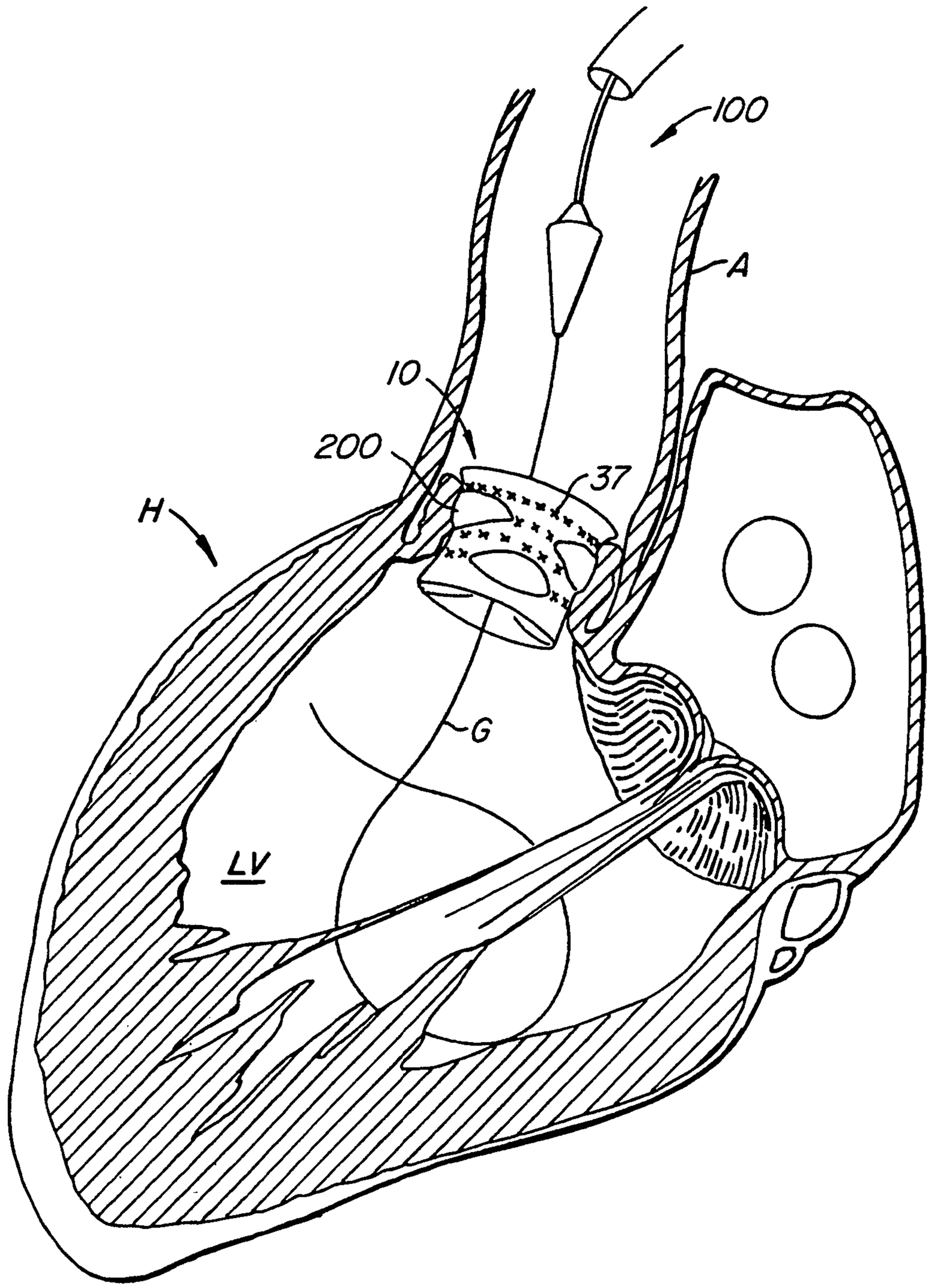

FIG. 5F

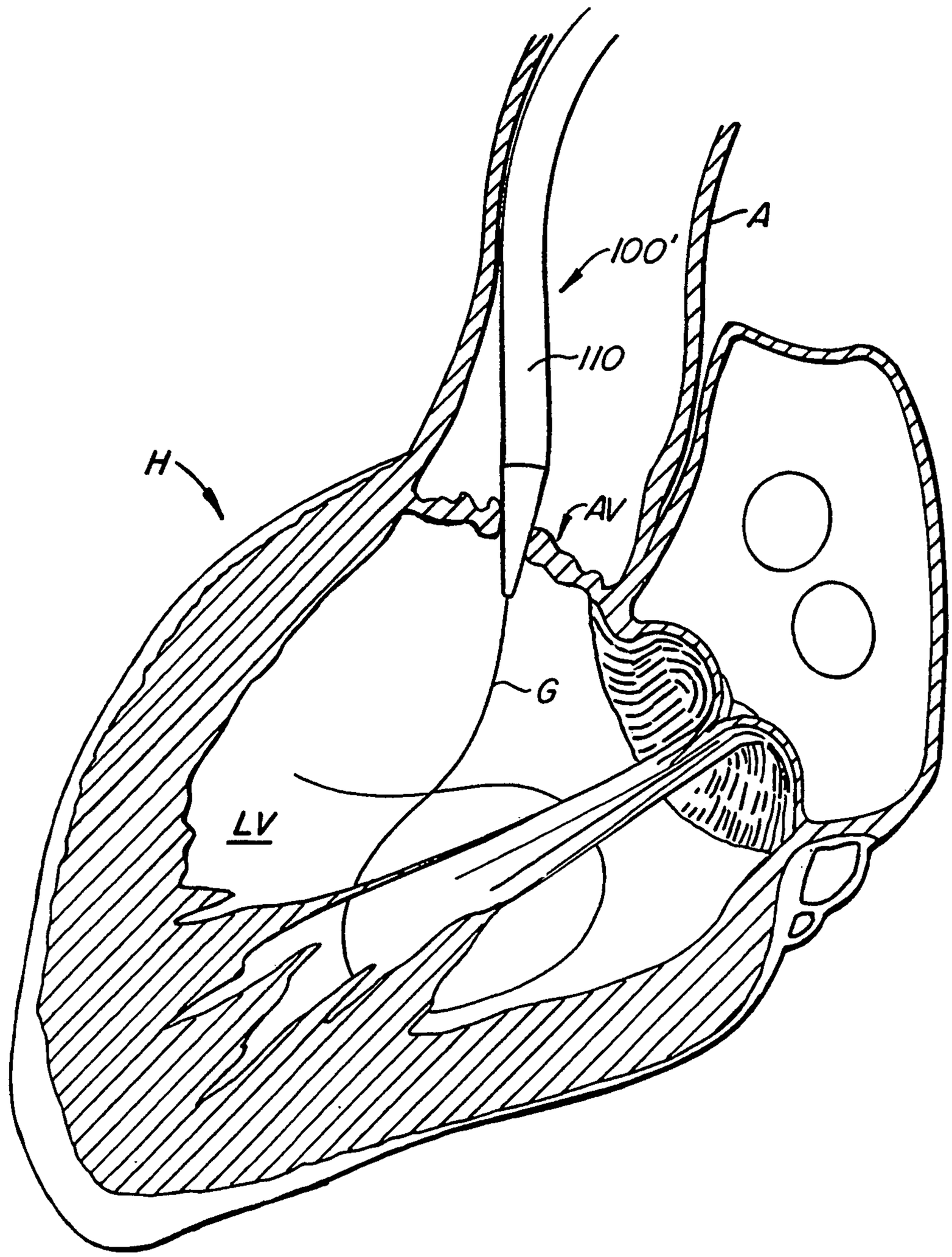

FIG. 6A

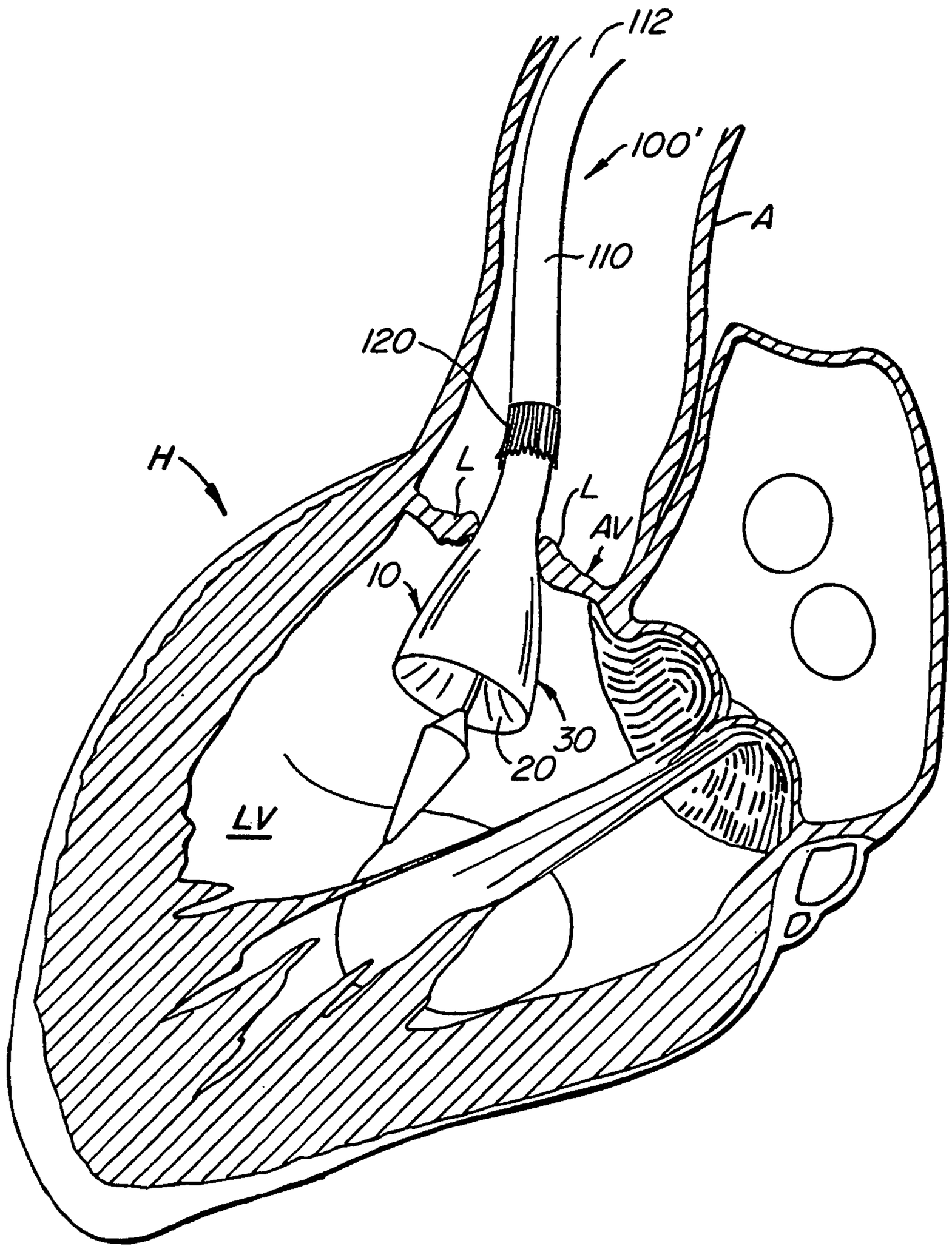

FIG. 6B

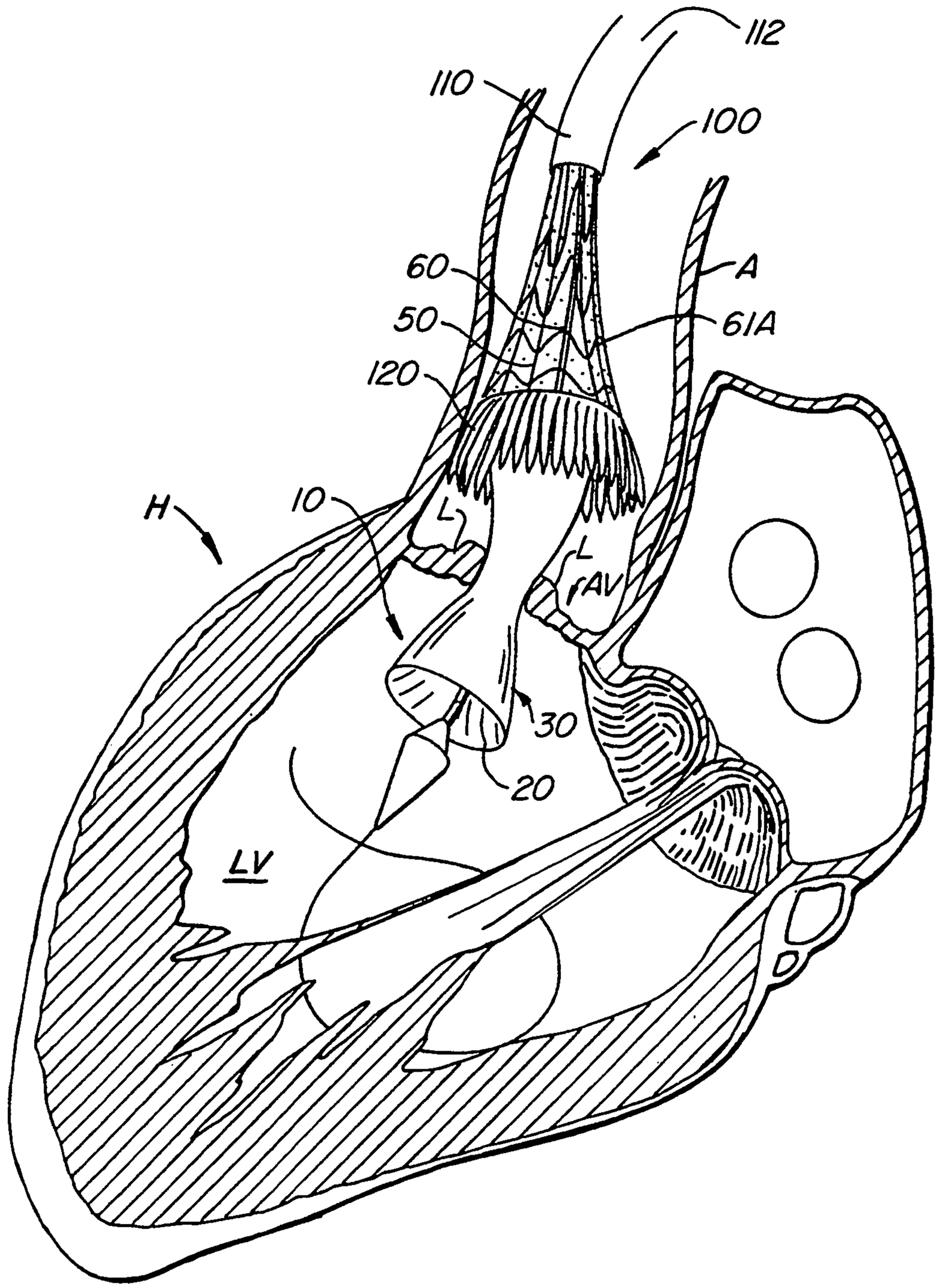

FIG. 6C

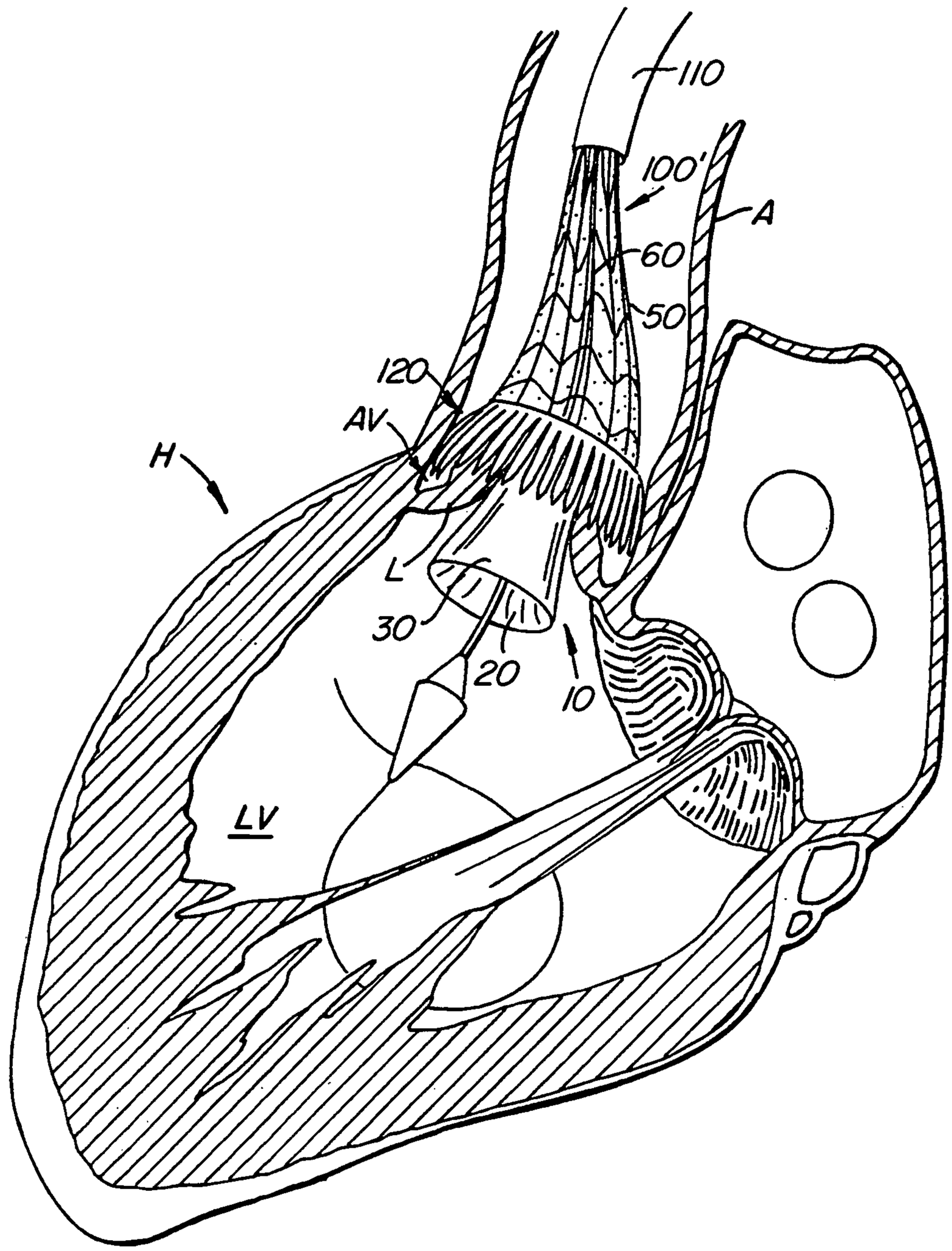

FIG. 6D

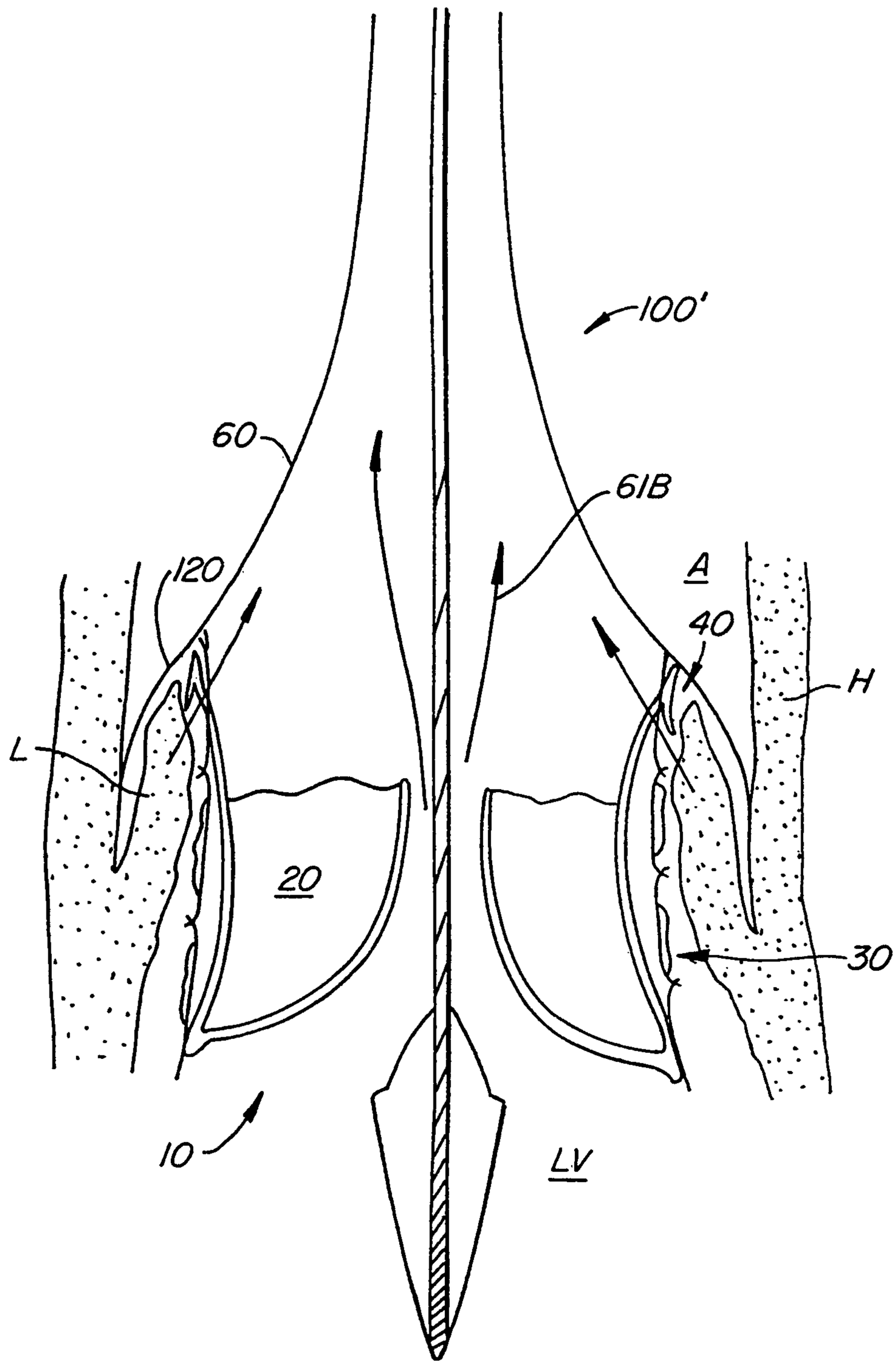

FIG. 6E

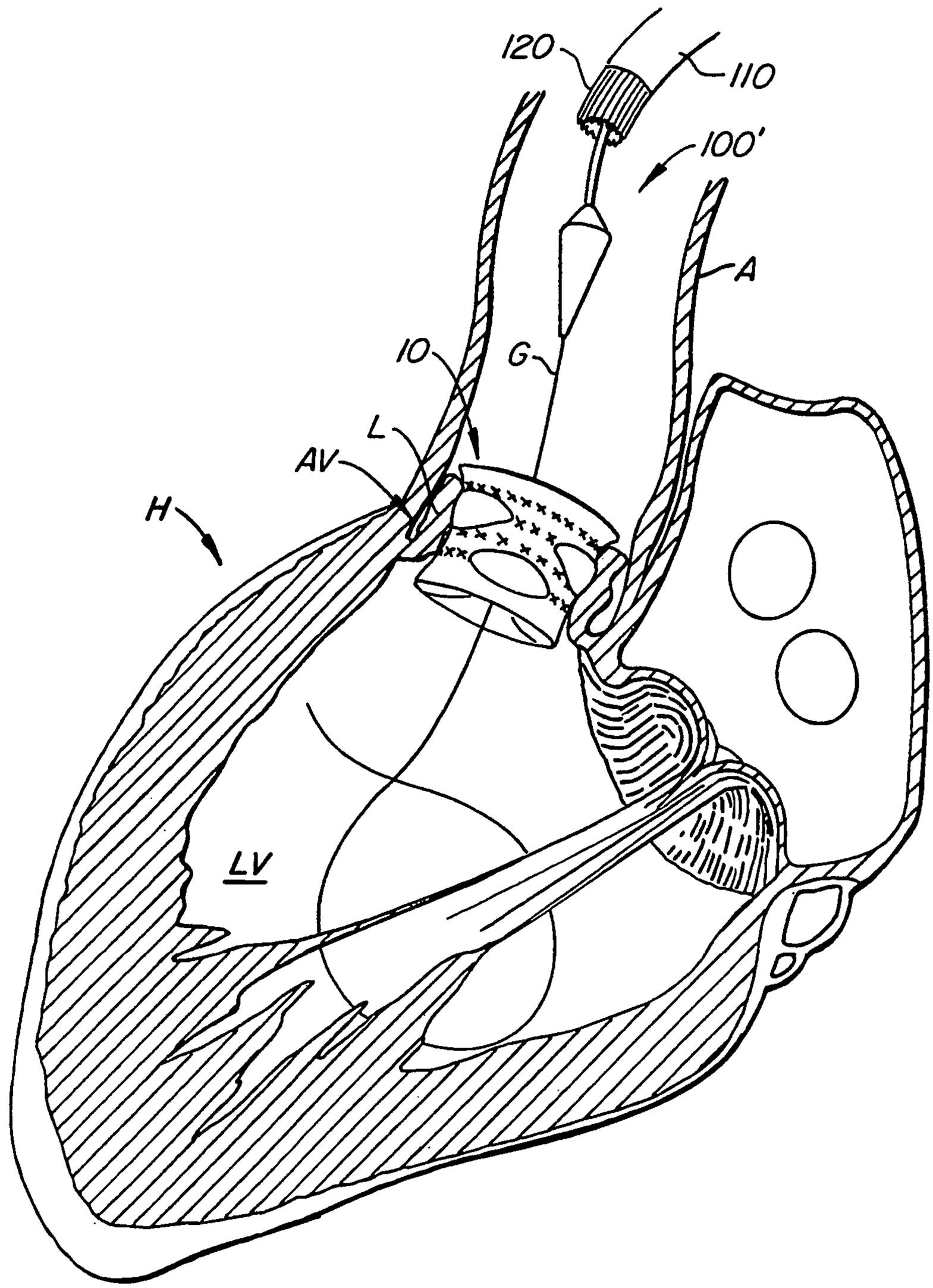

FIG. 6F

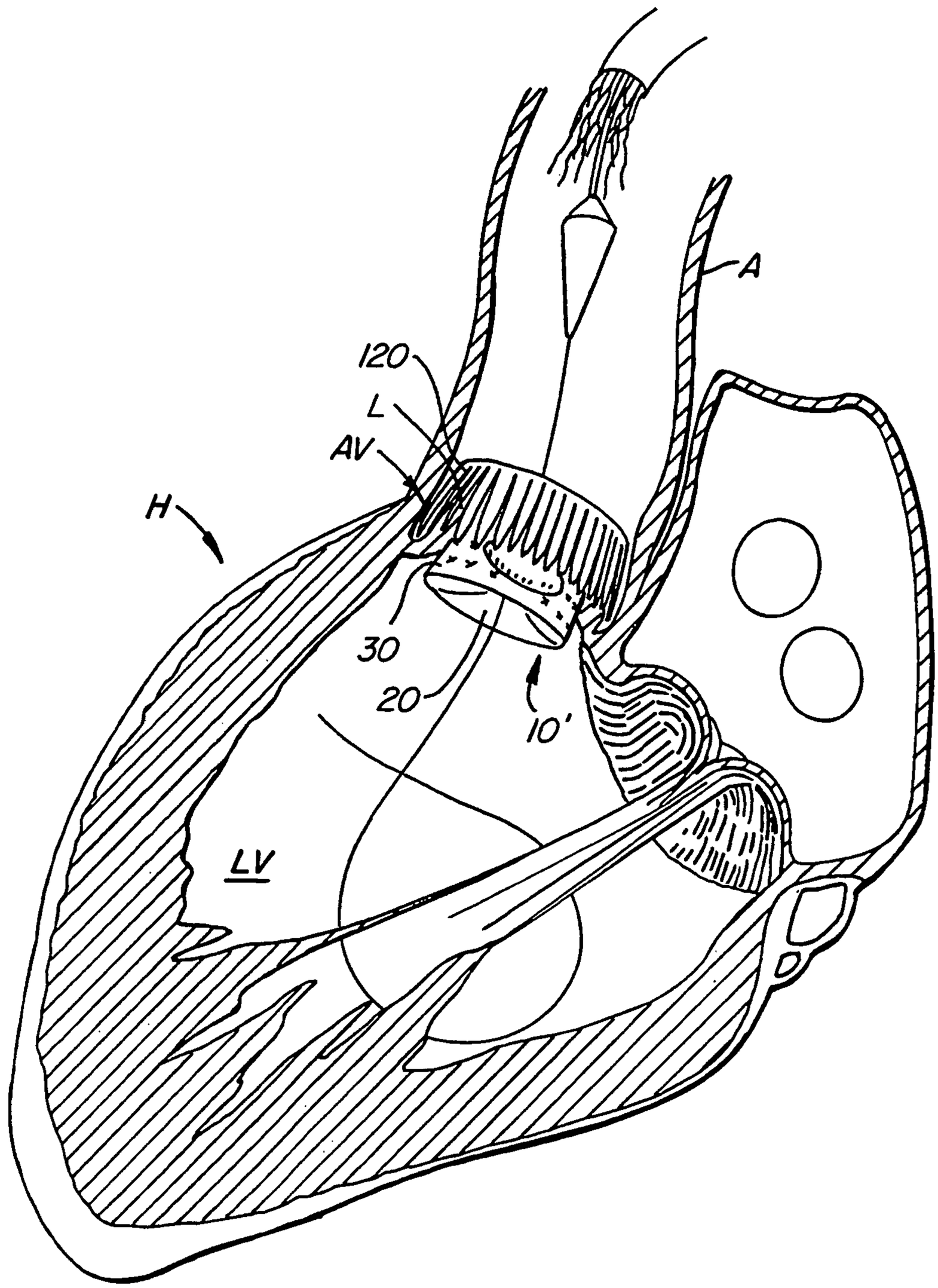

FIG. 7

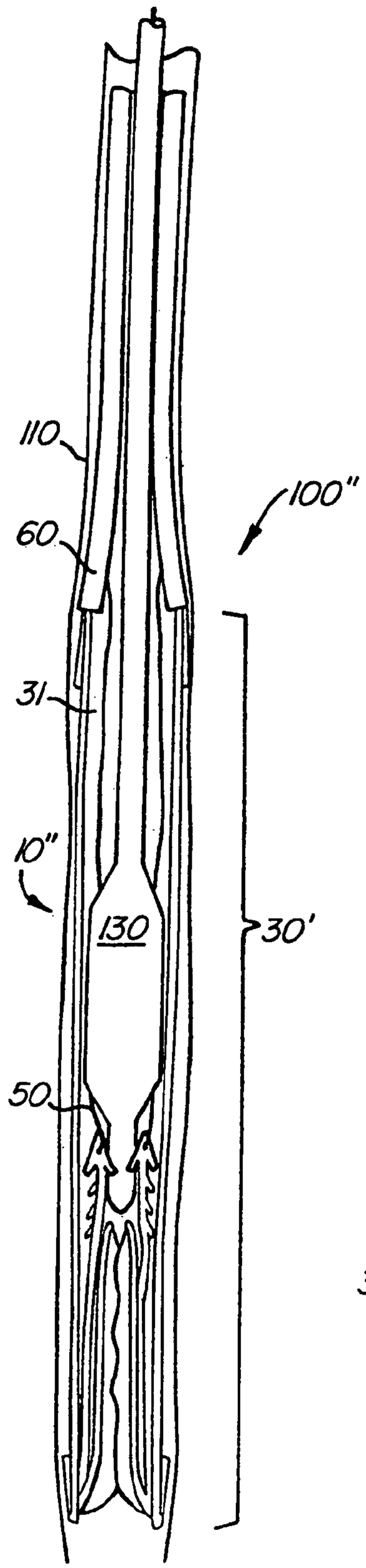

FIG. 8A

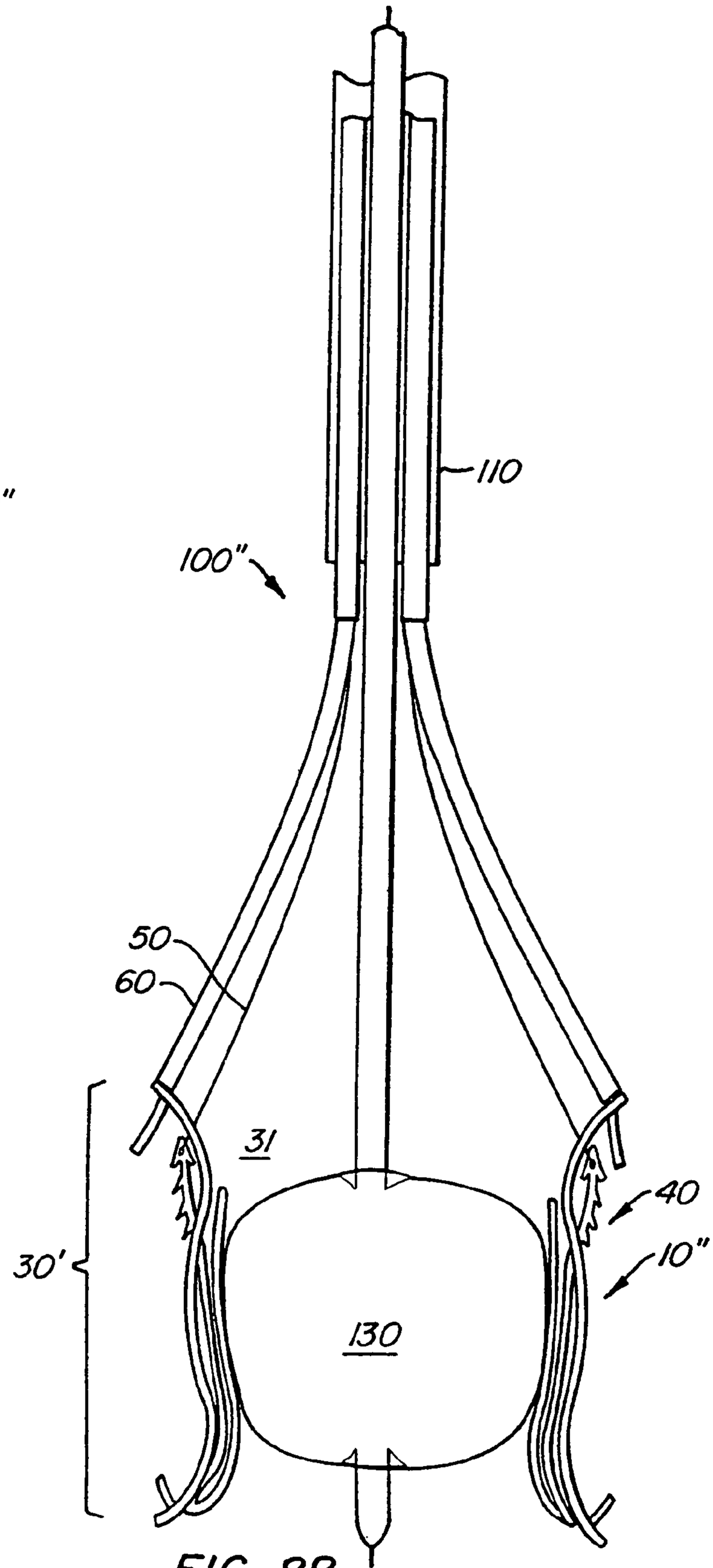

FIG. 8B

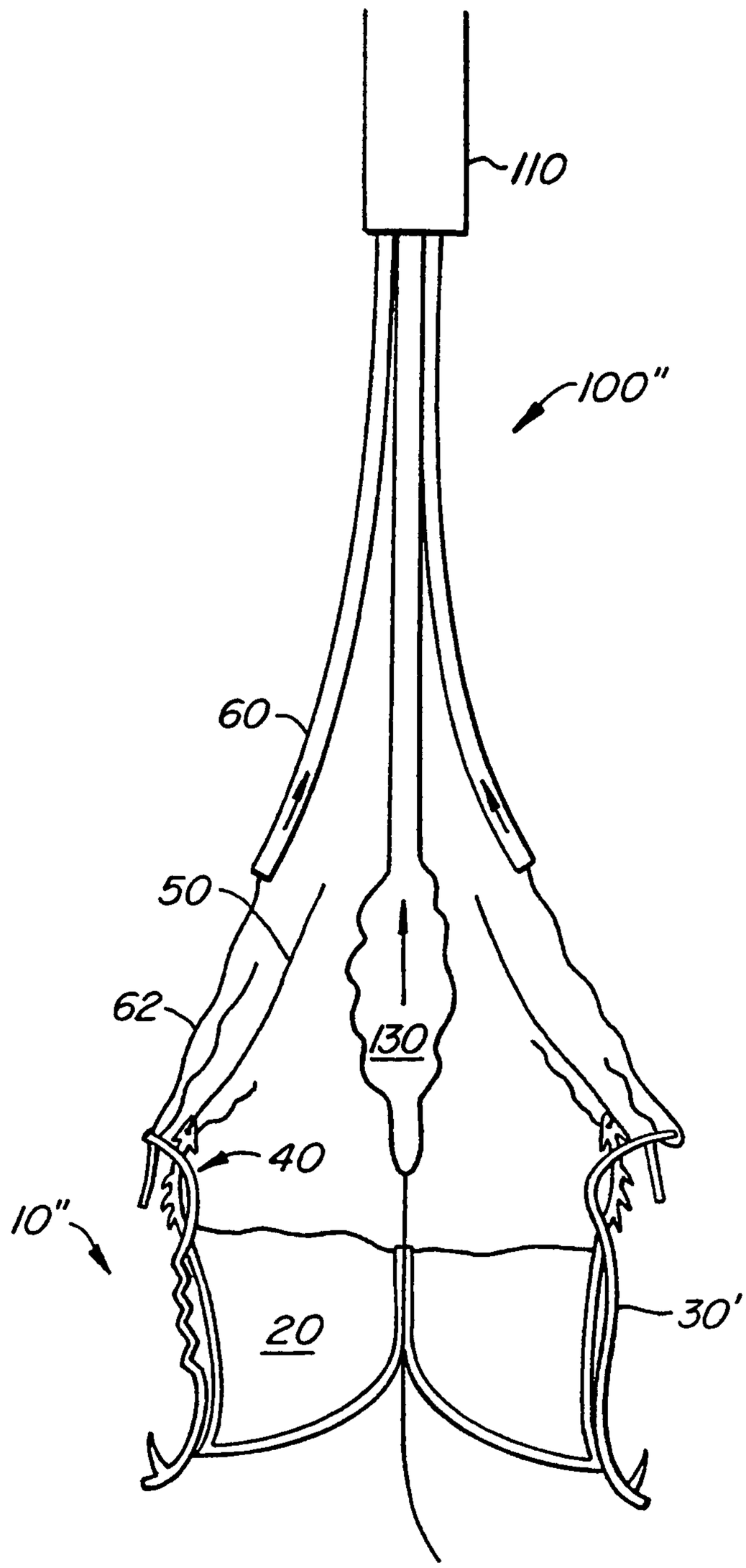

FIG. 8C

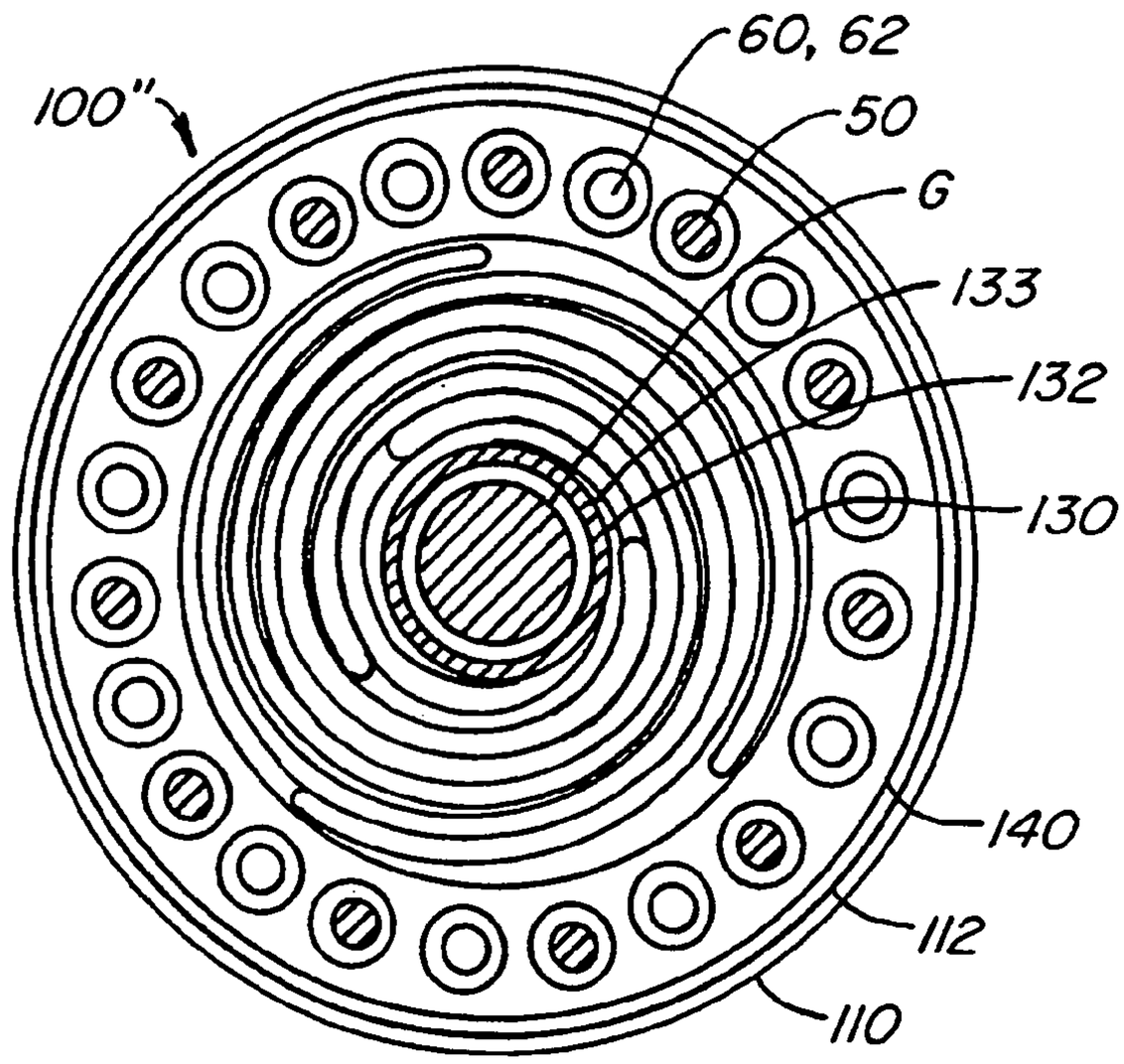

FIG. 10

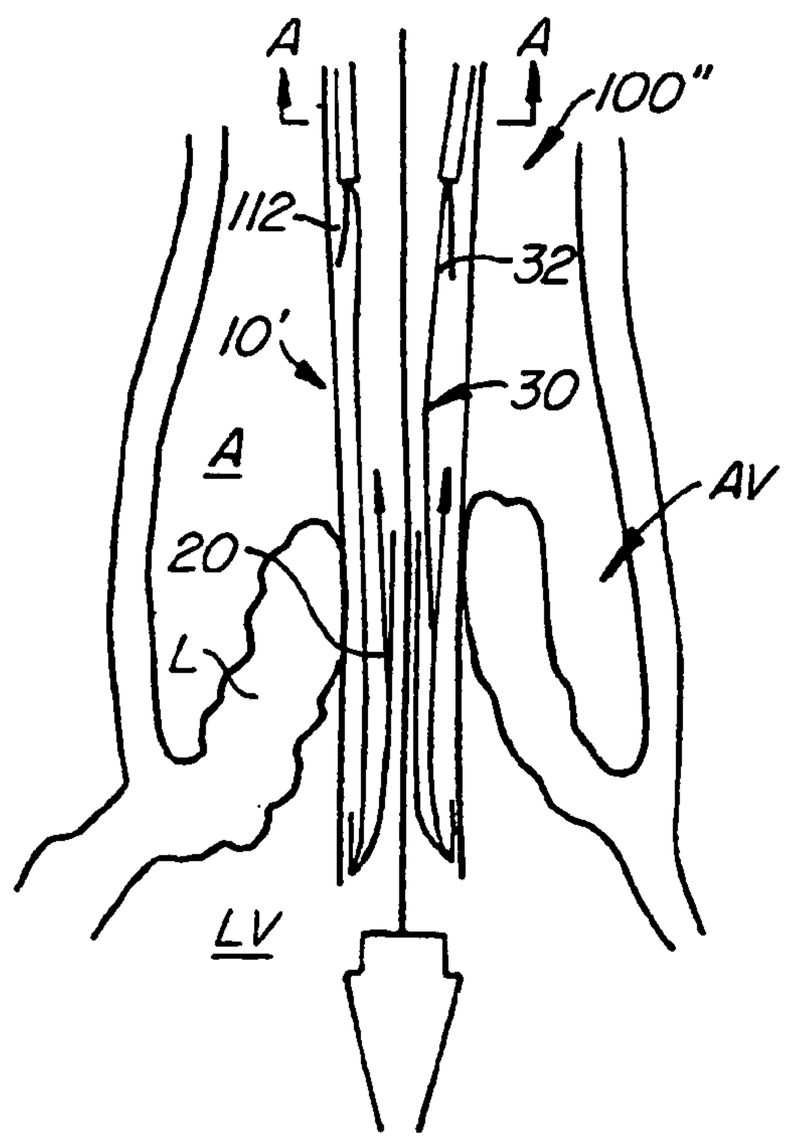

FIG. 9A

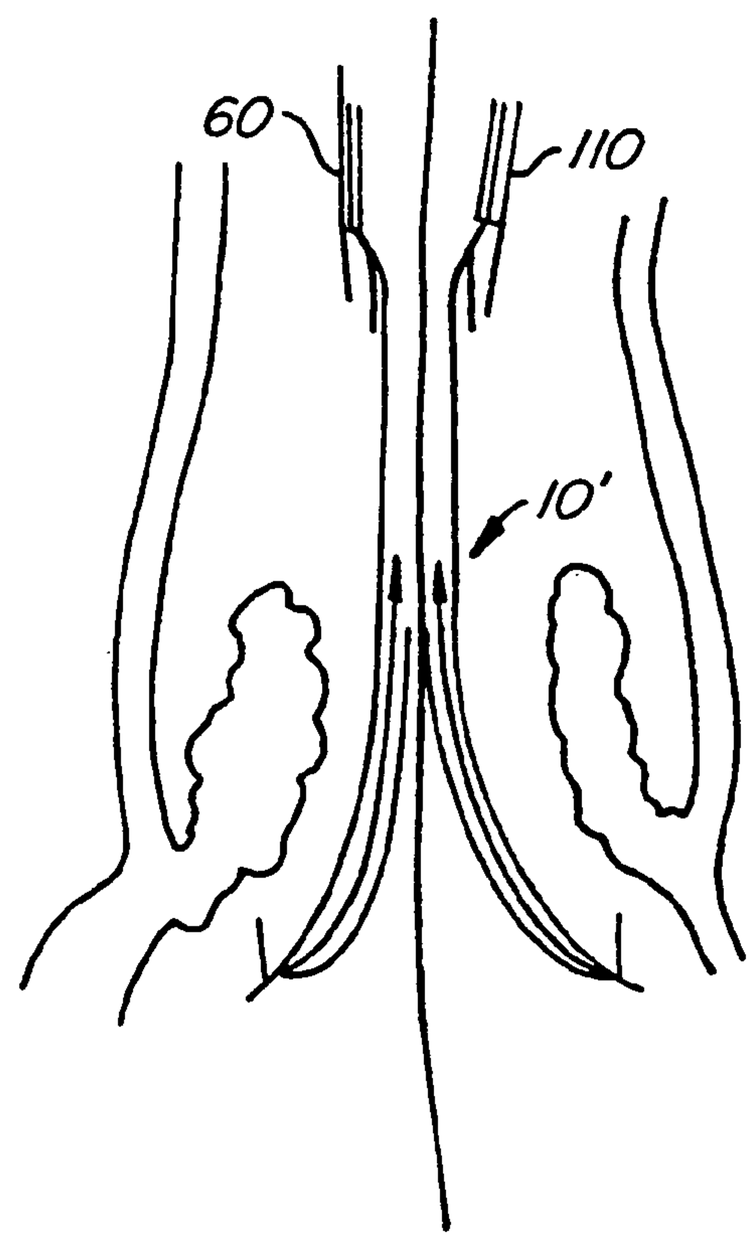

FIG. 9B

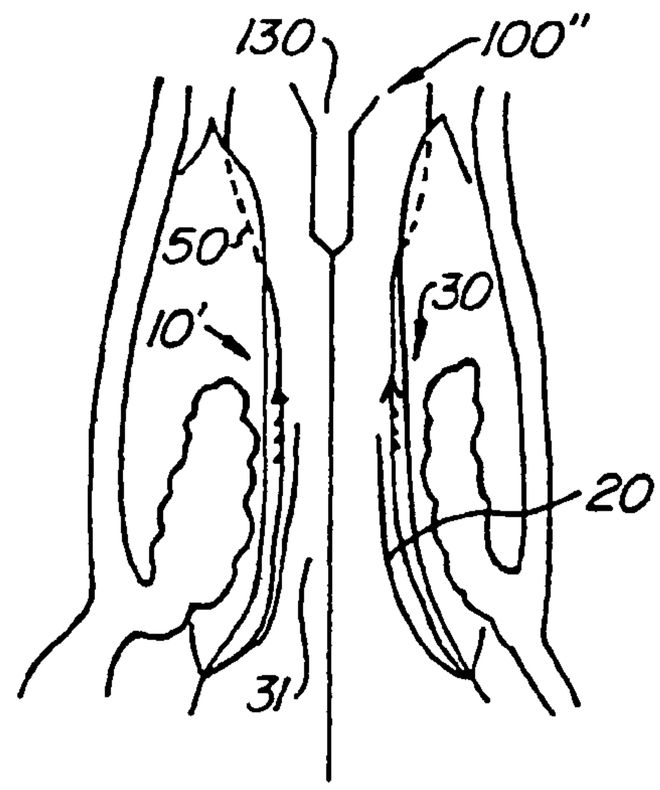

FIG. 9C

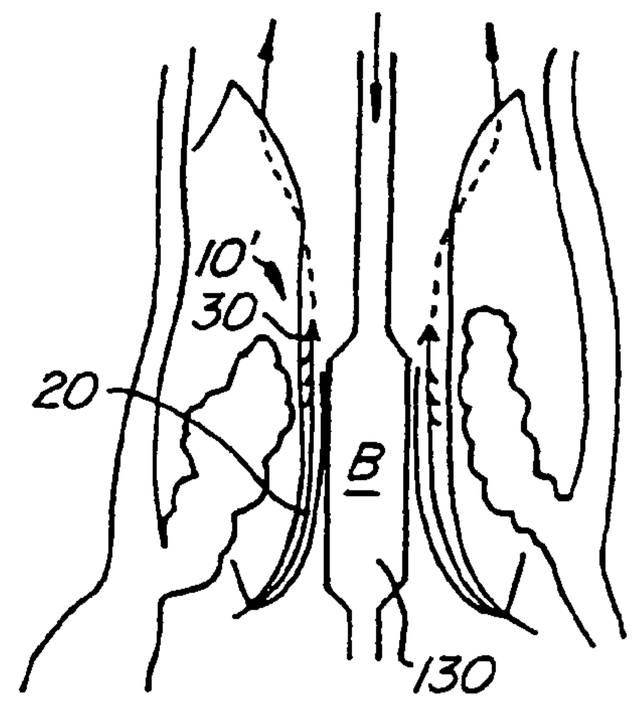

FIG. 9D

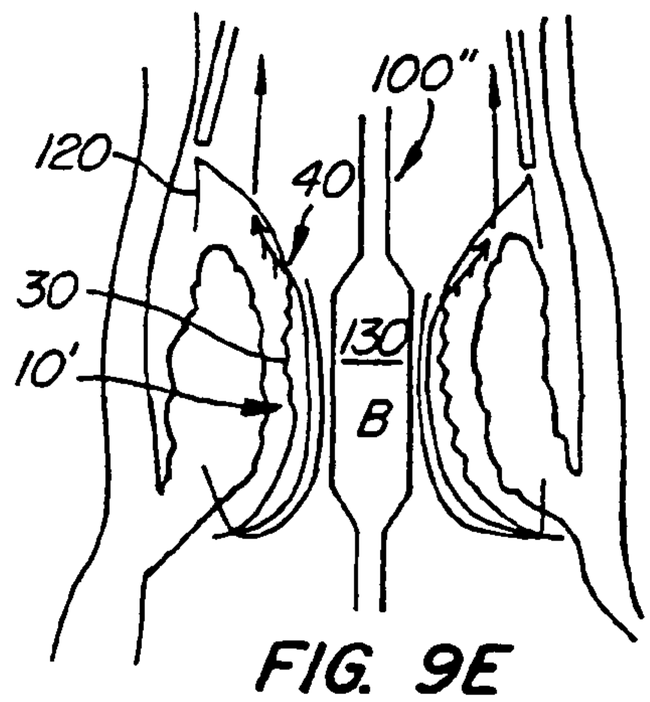

FIG. 9E

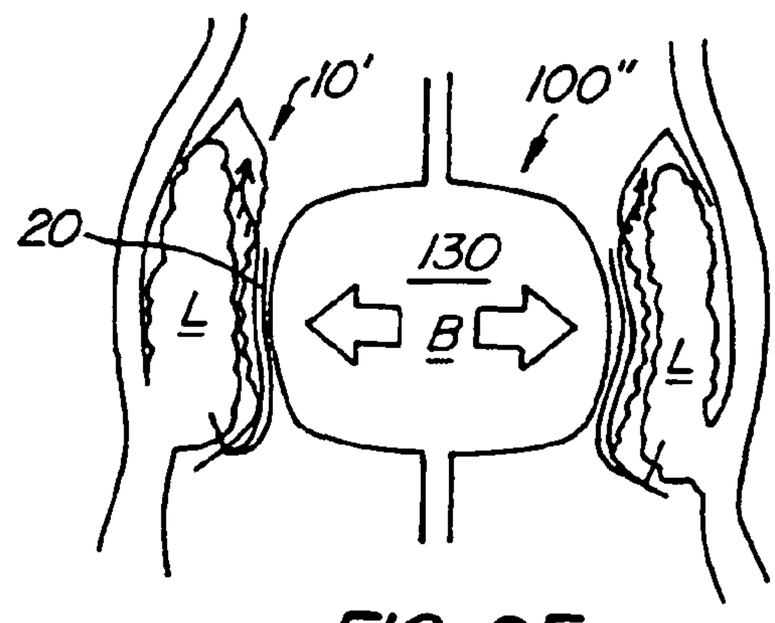

FIG. 9F

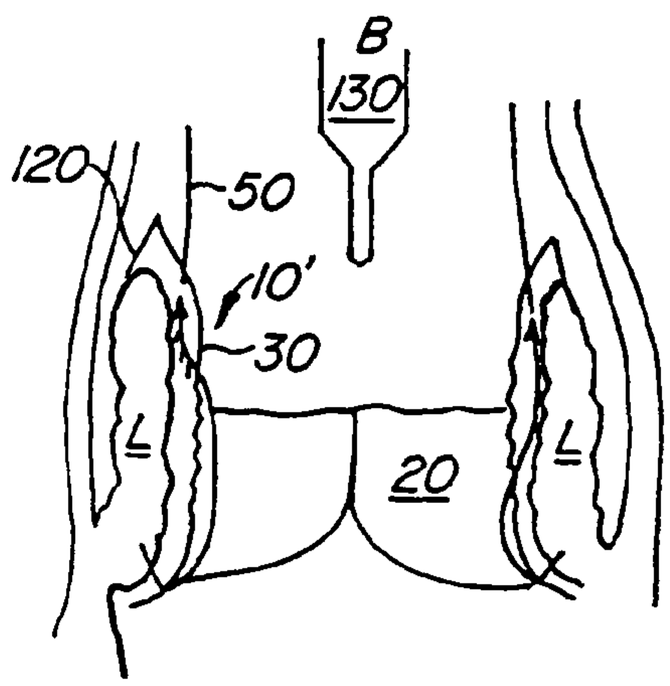

FIG. 9G

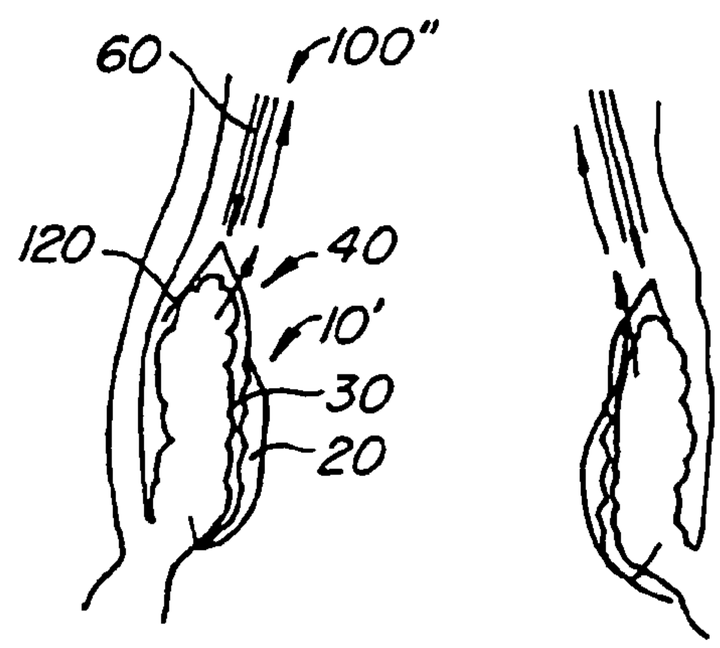

FIG. 9H

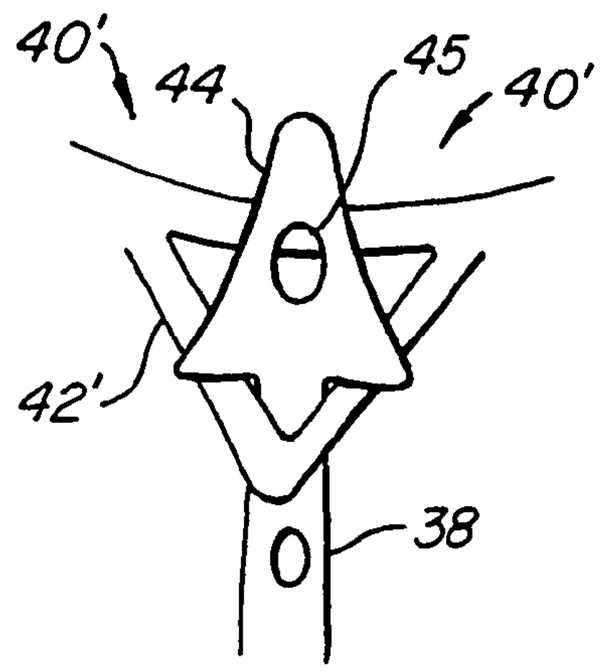

FIG. 11A

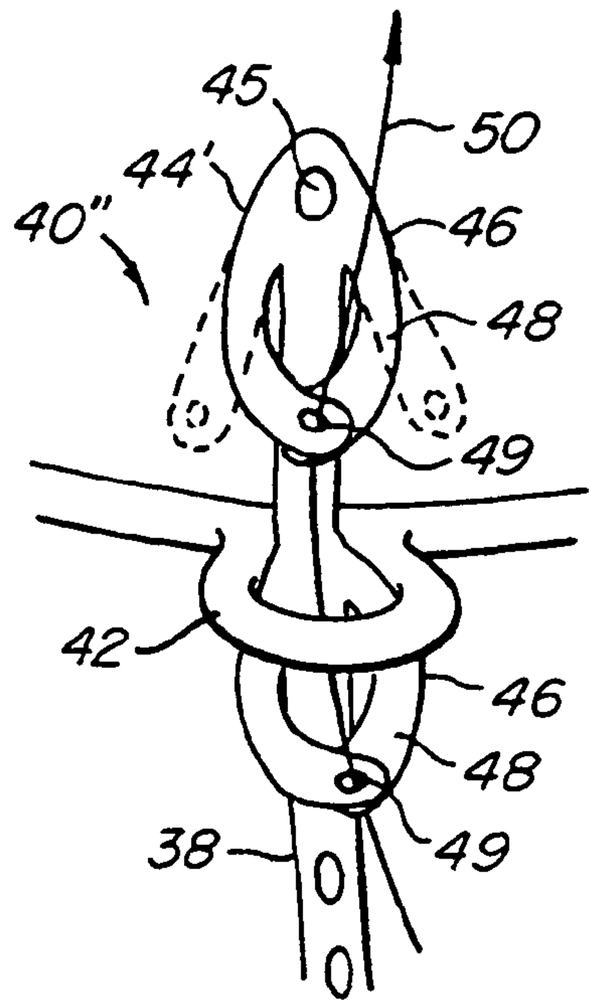

FIG. 11B

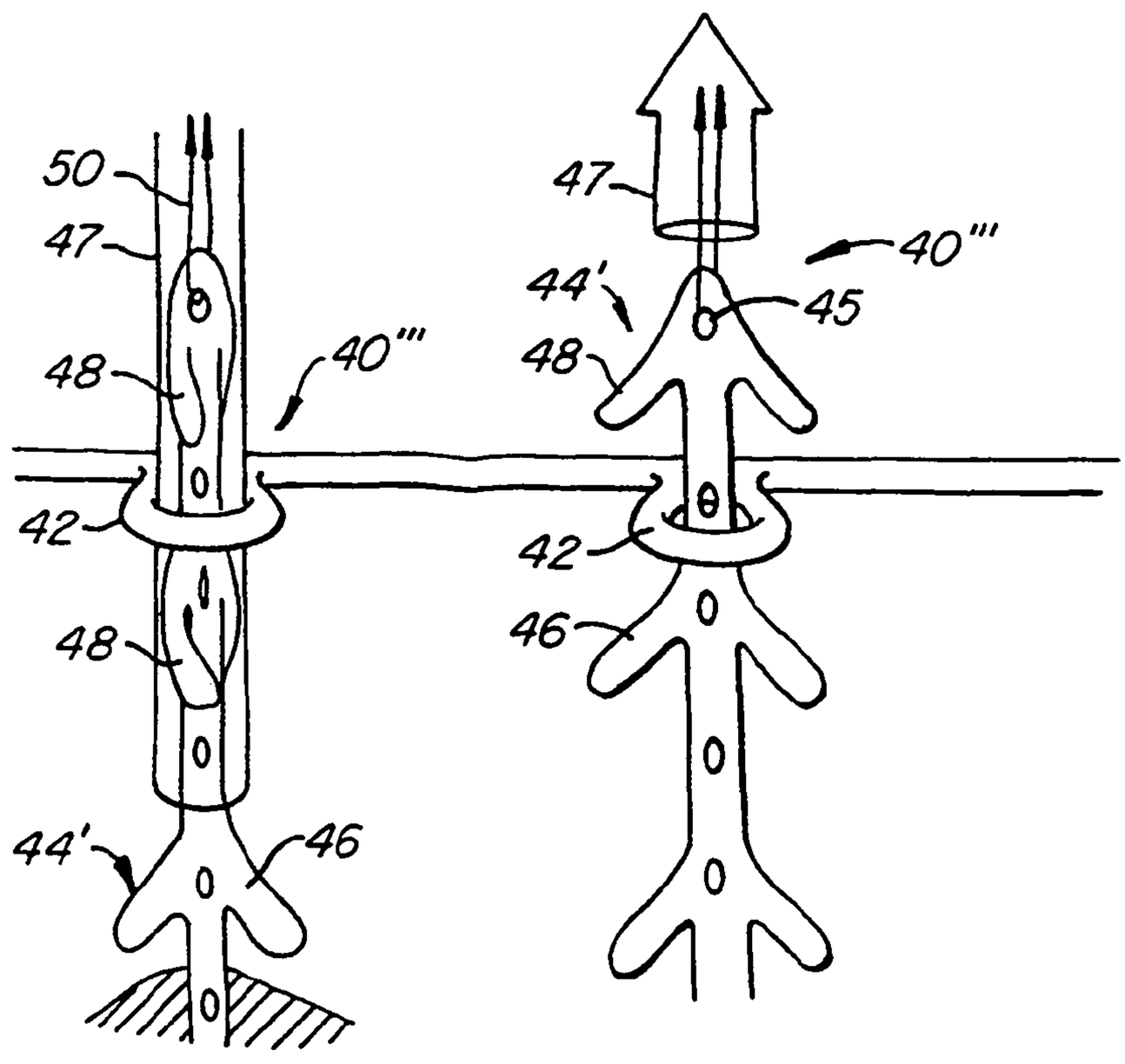

FIG. 11C

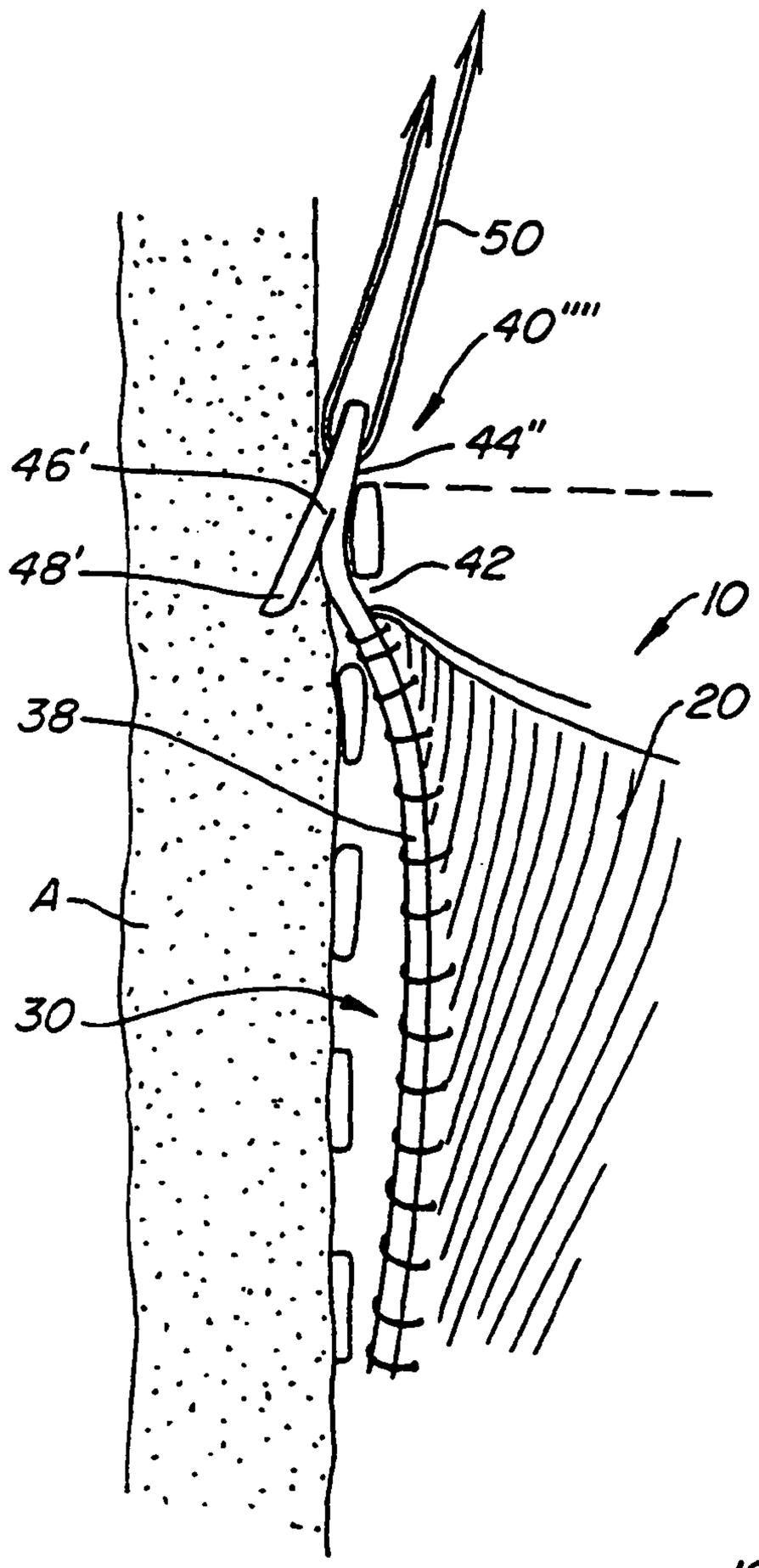

FIG. 12C

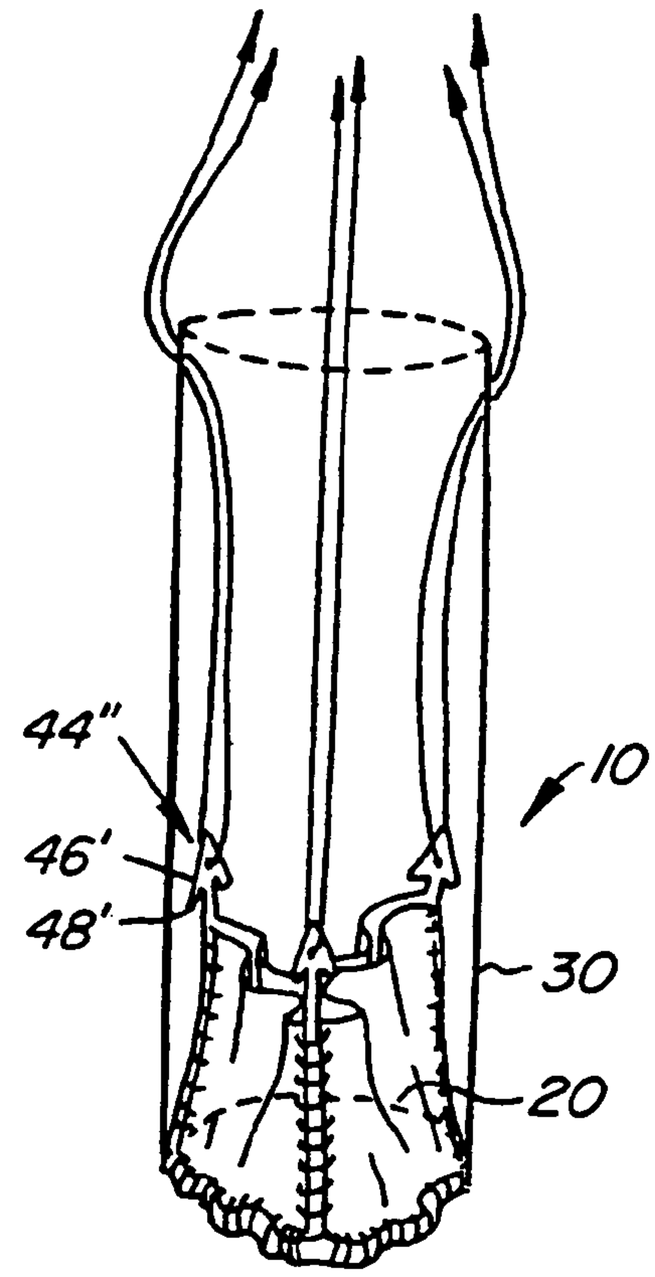

FIG. 12A

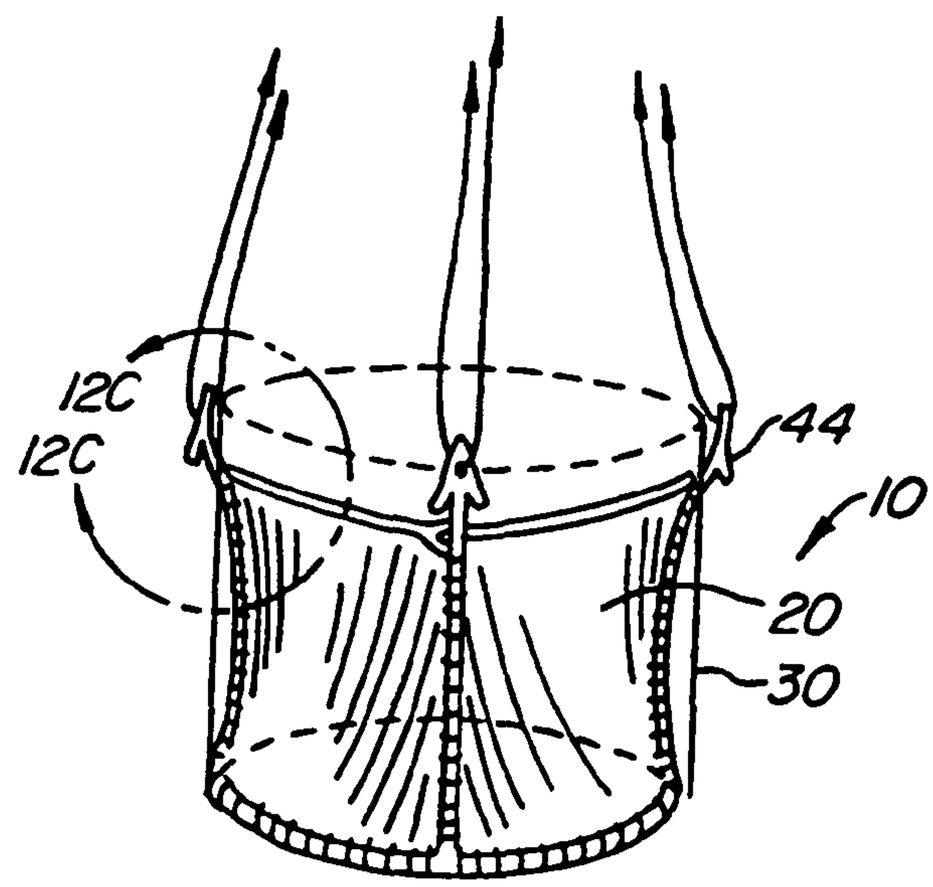

FIG. 12B

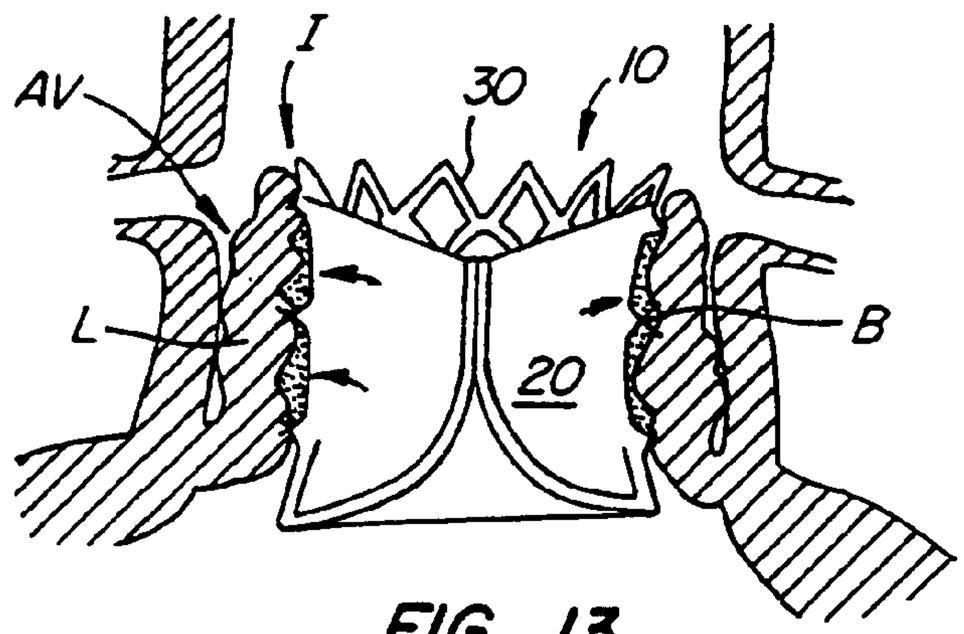

FIG. 13

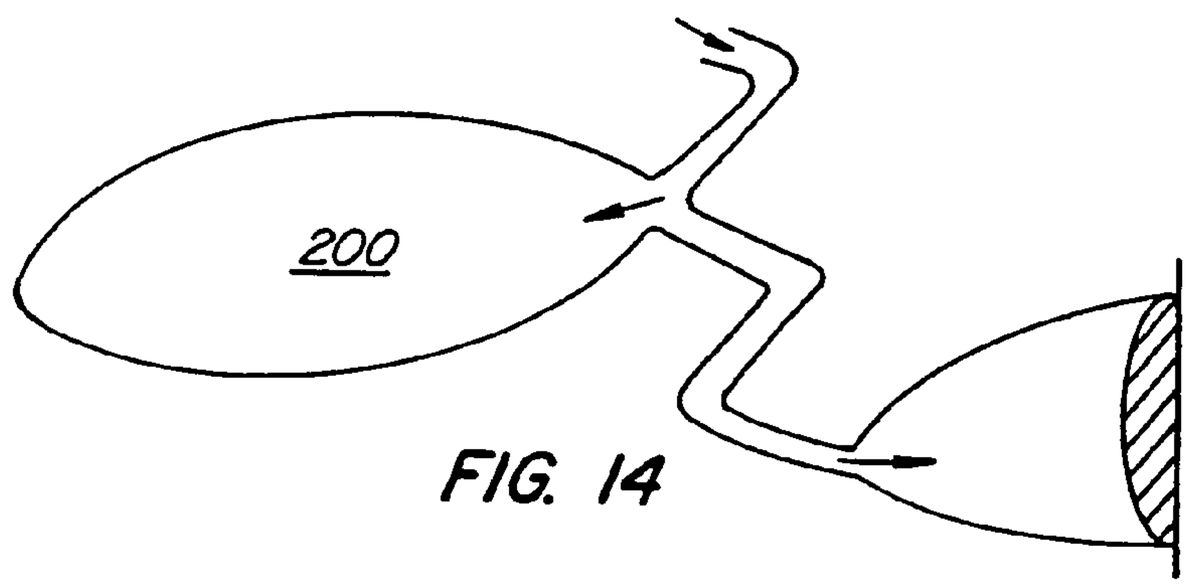

FIG. 14

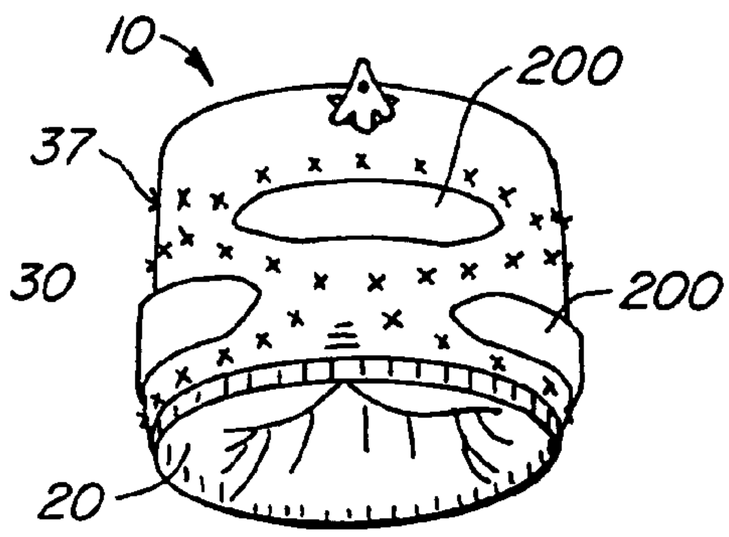

FIG. 15A

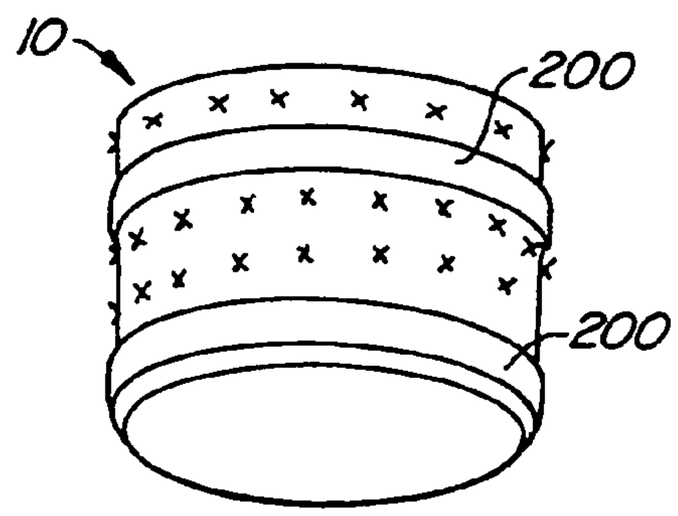

FIG. 15B

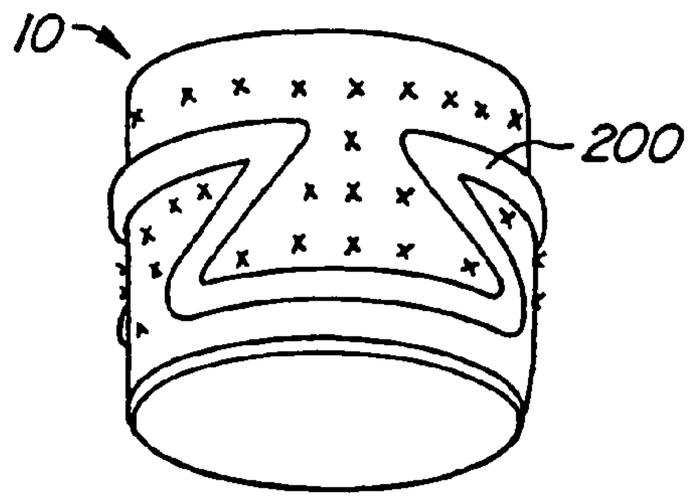

FIG. 15C

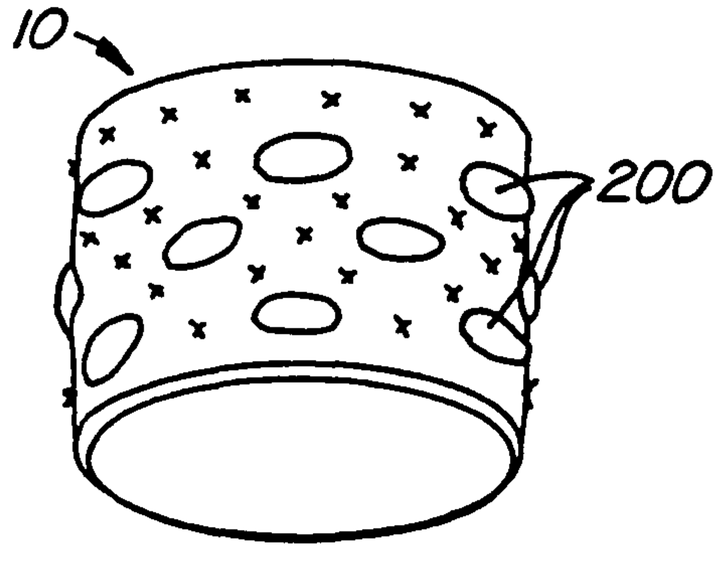

FIG. 15D

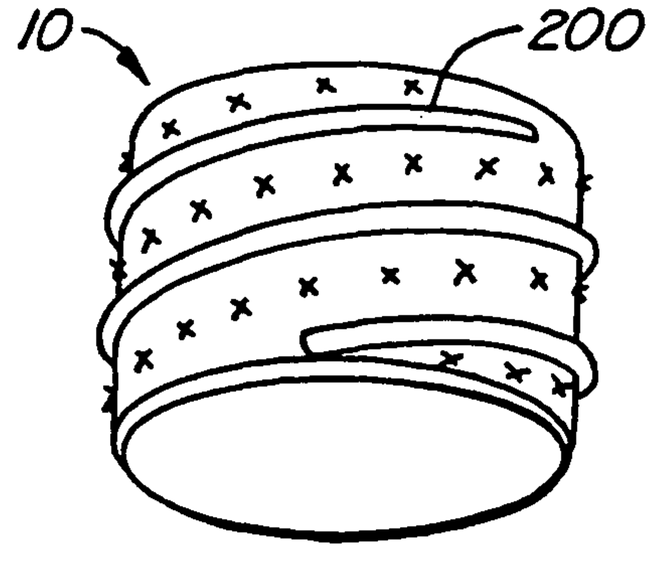

FIG. 15E

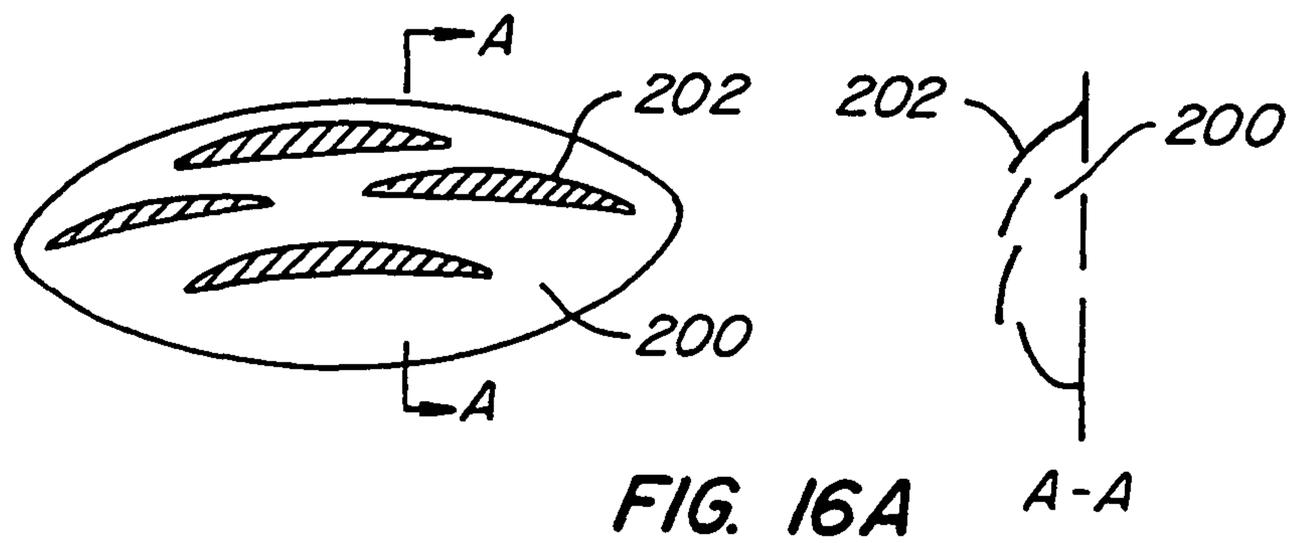

FIG. 16A

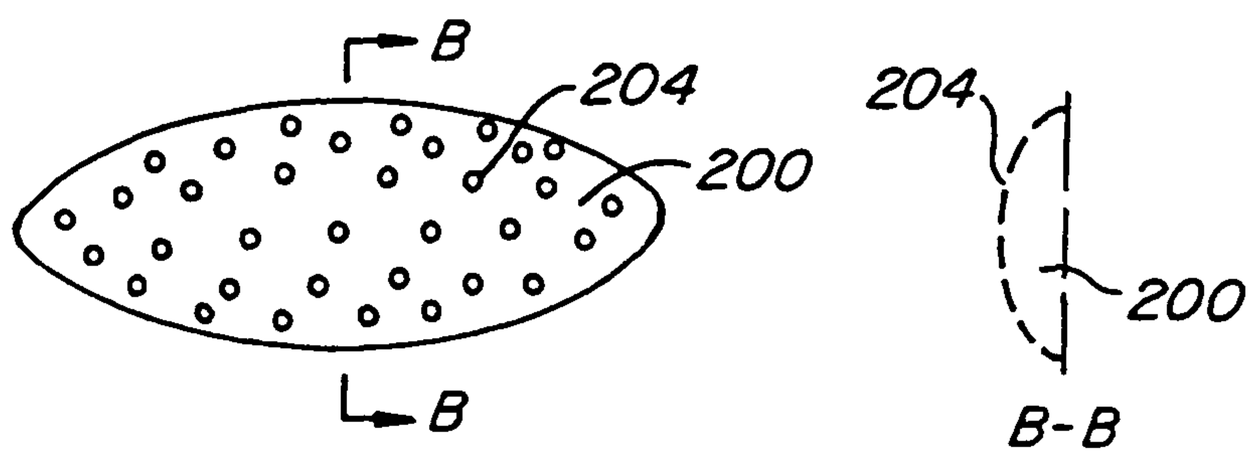

FIG. 16B

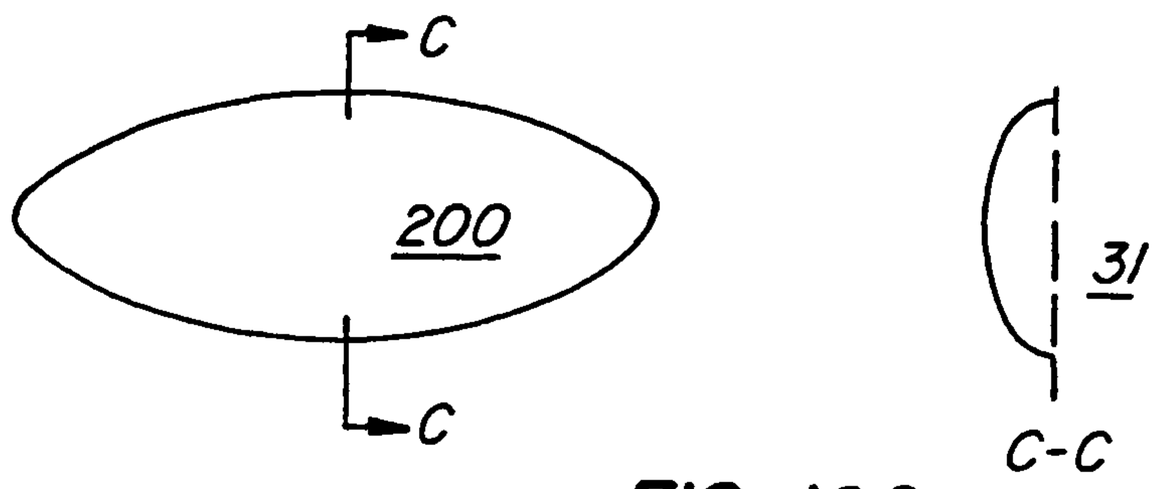

FIG. 16C

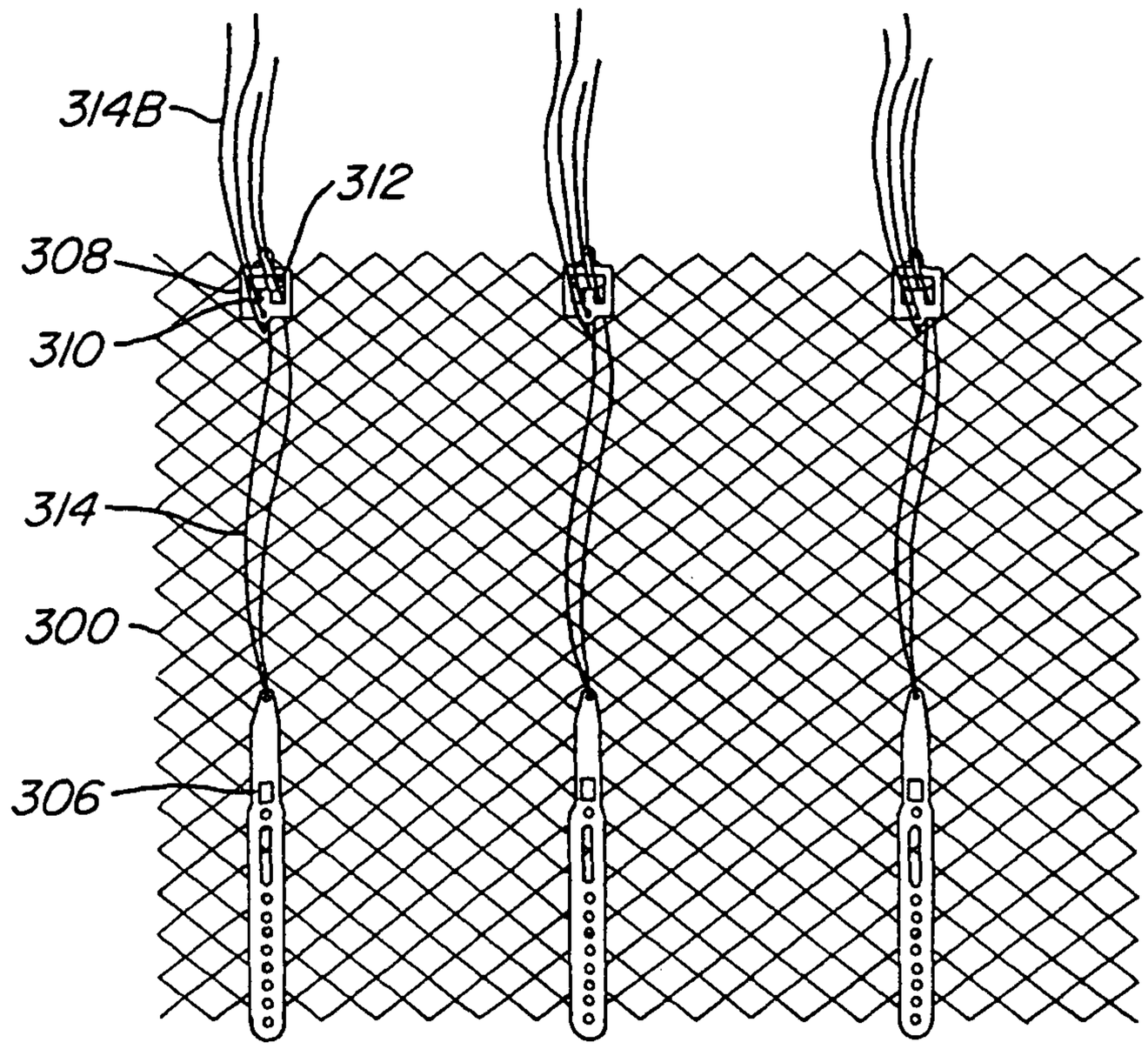

FIG. 17A

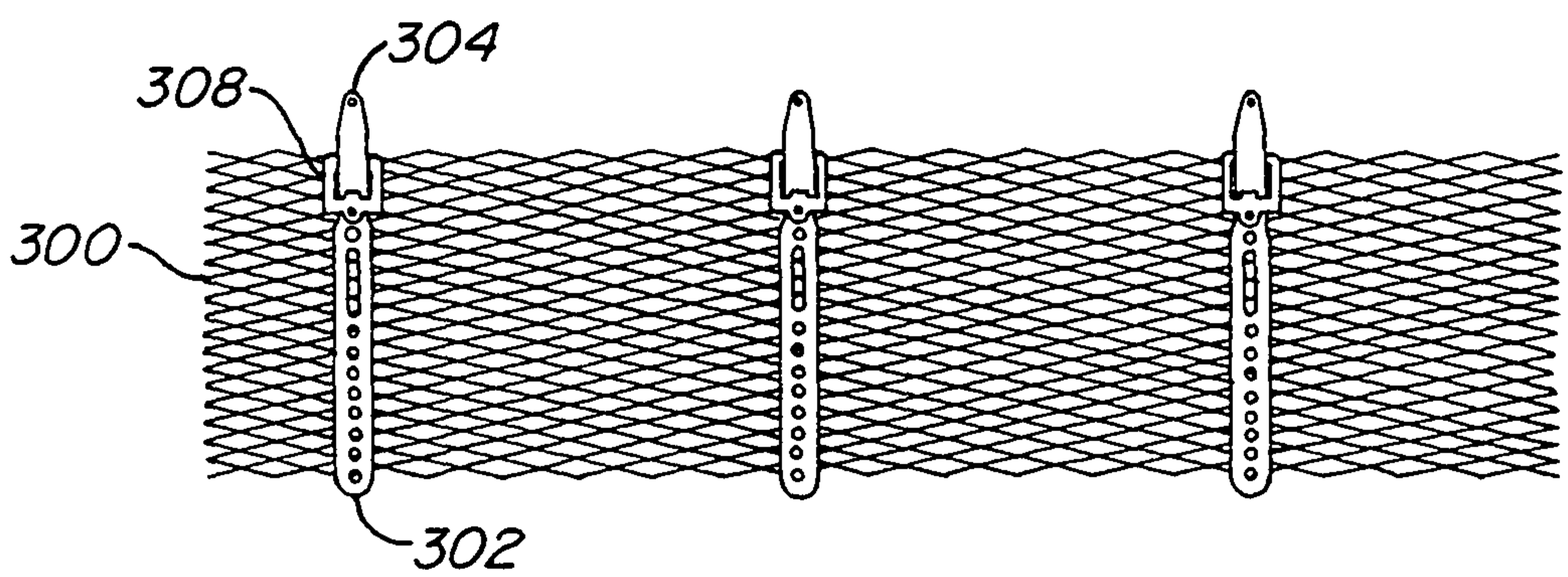

FIG. 18A

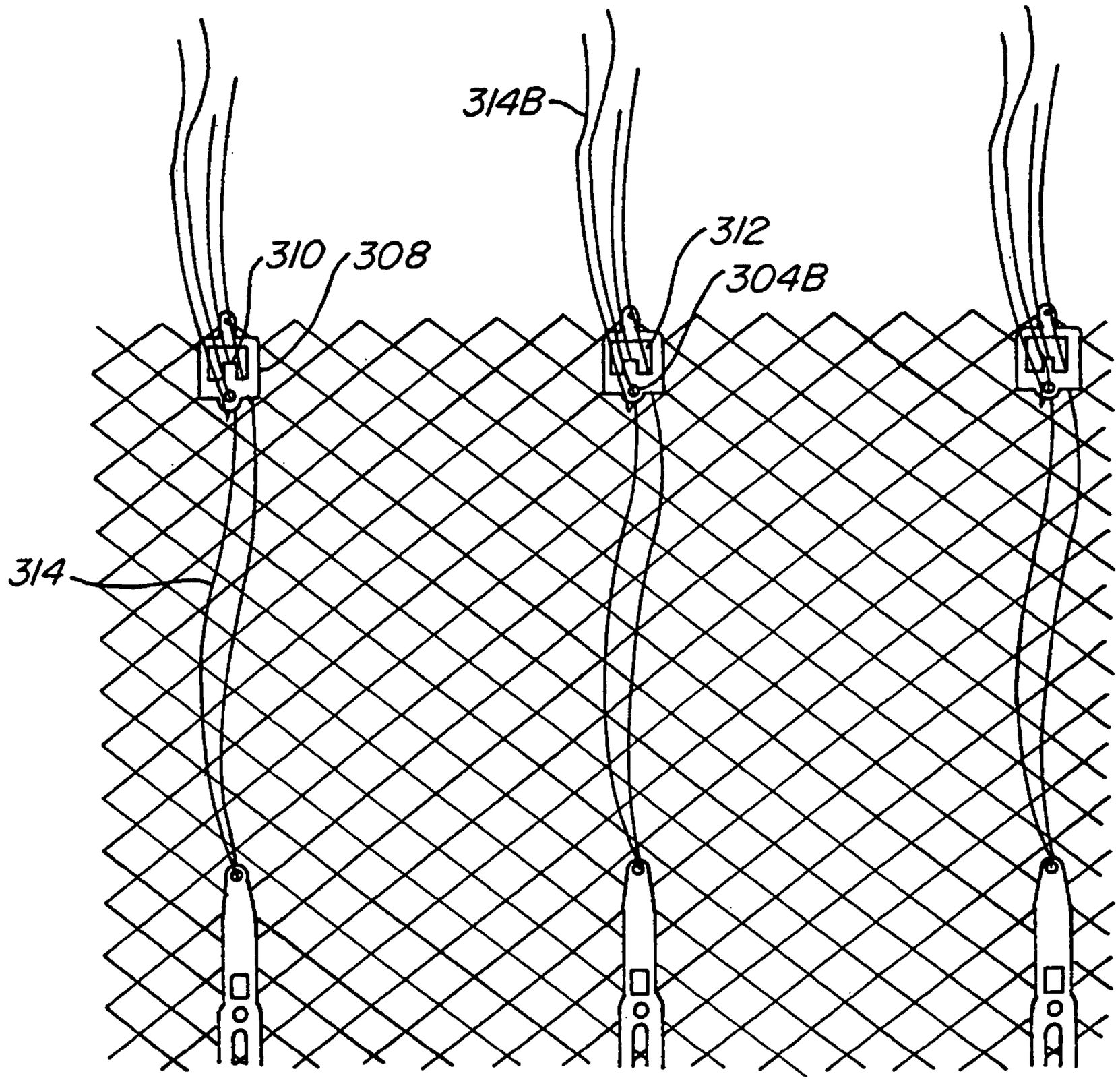

FIG. 17B

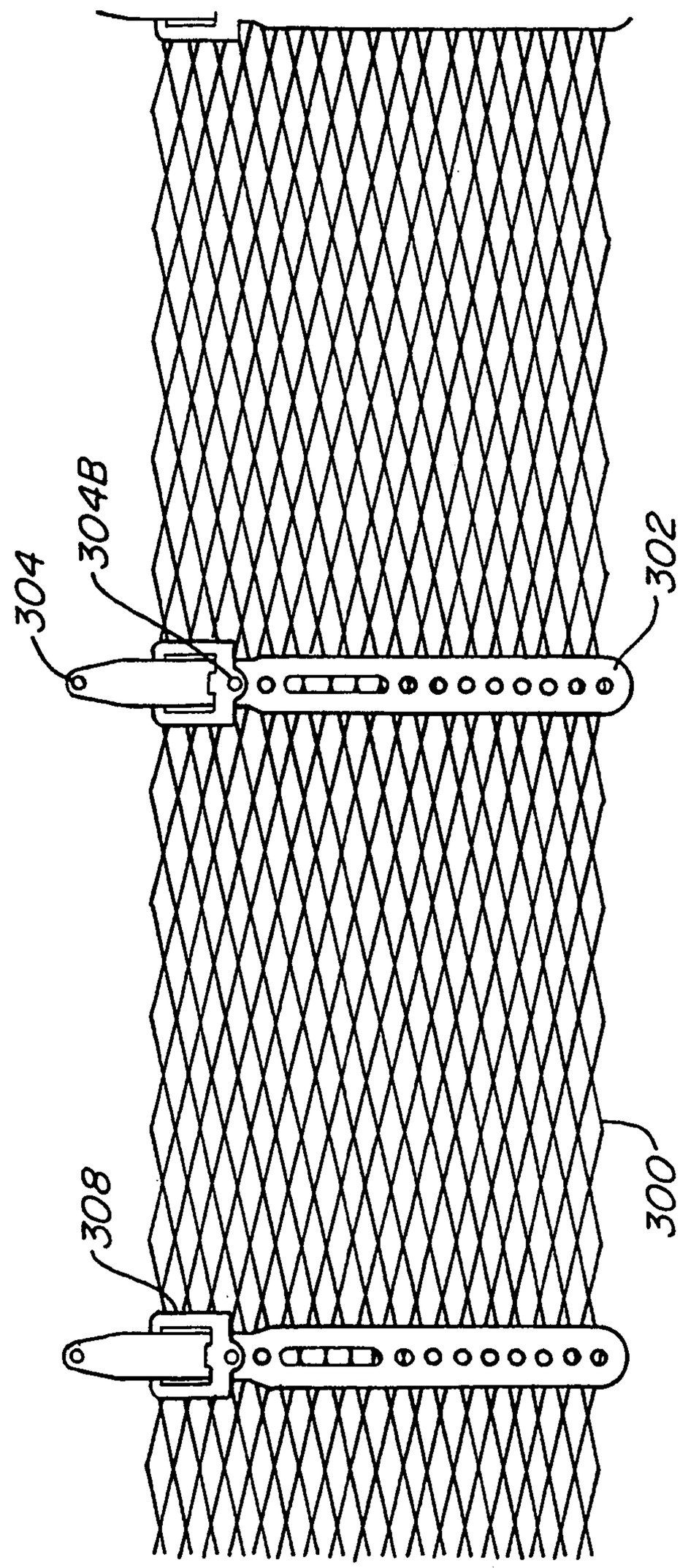

FIG. 18B

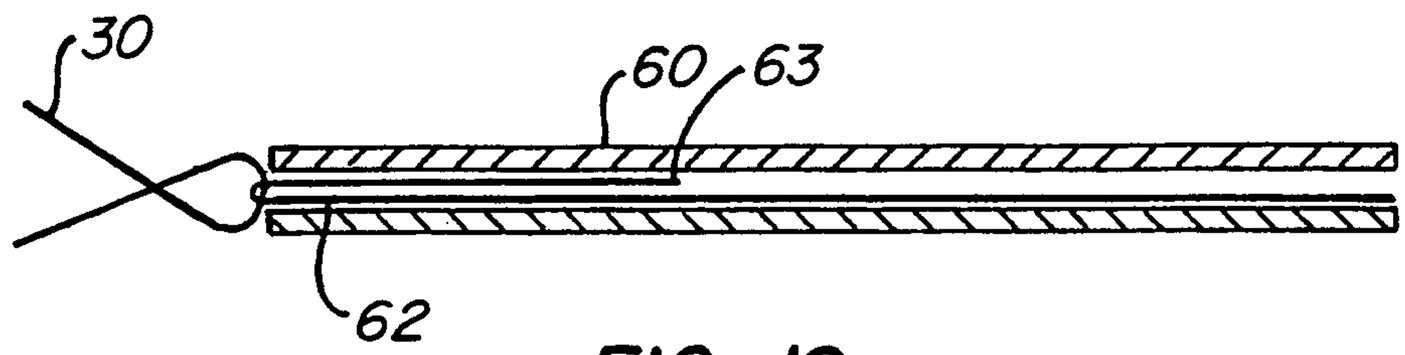

FIG. 19

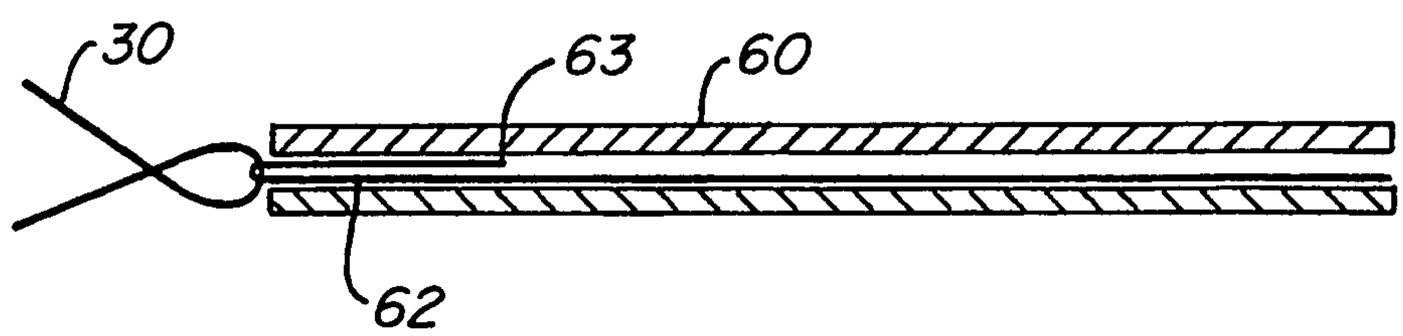

FIG. 20

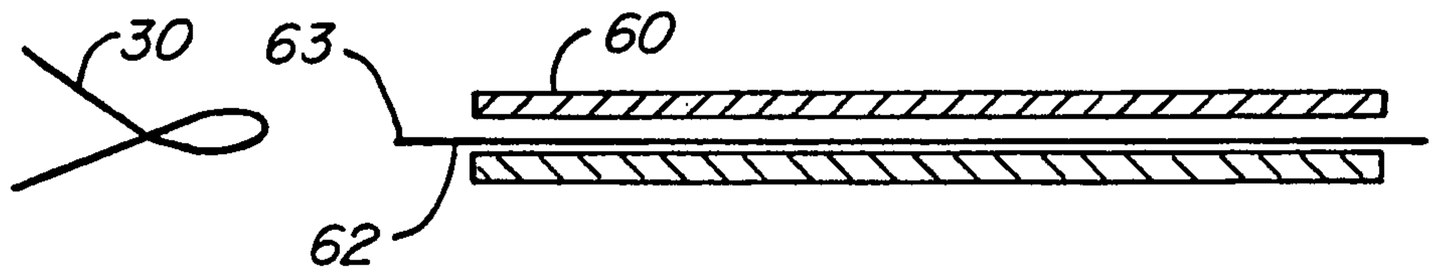

FIG. 21

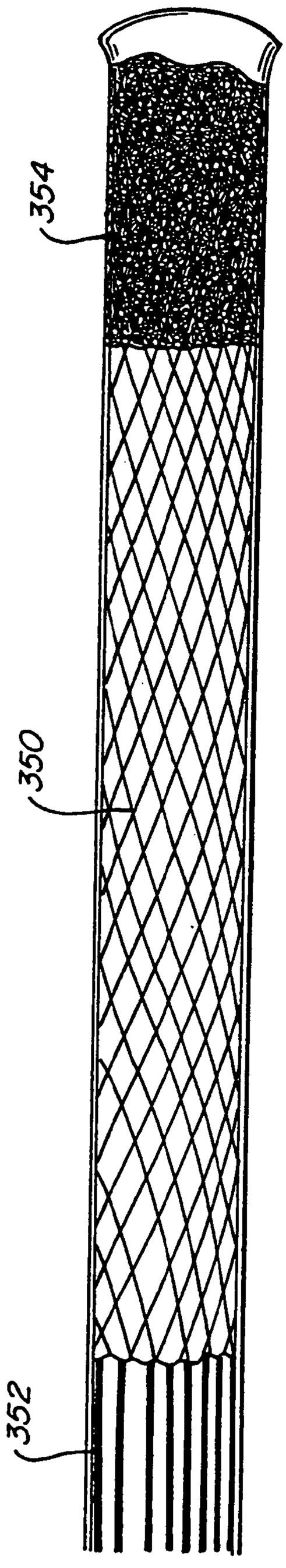

FIG. 22

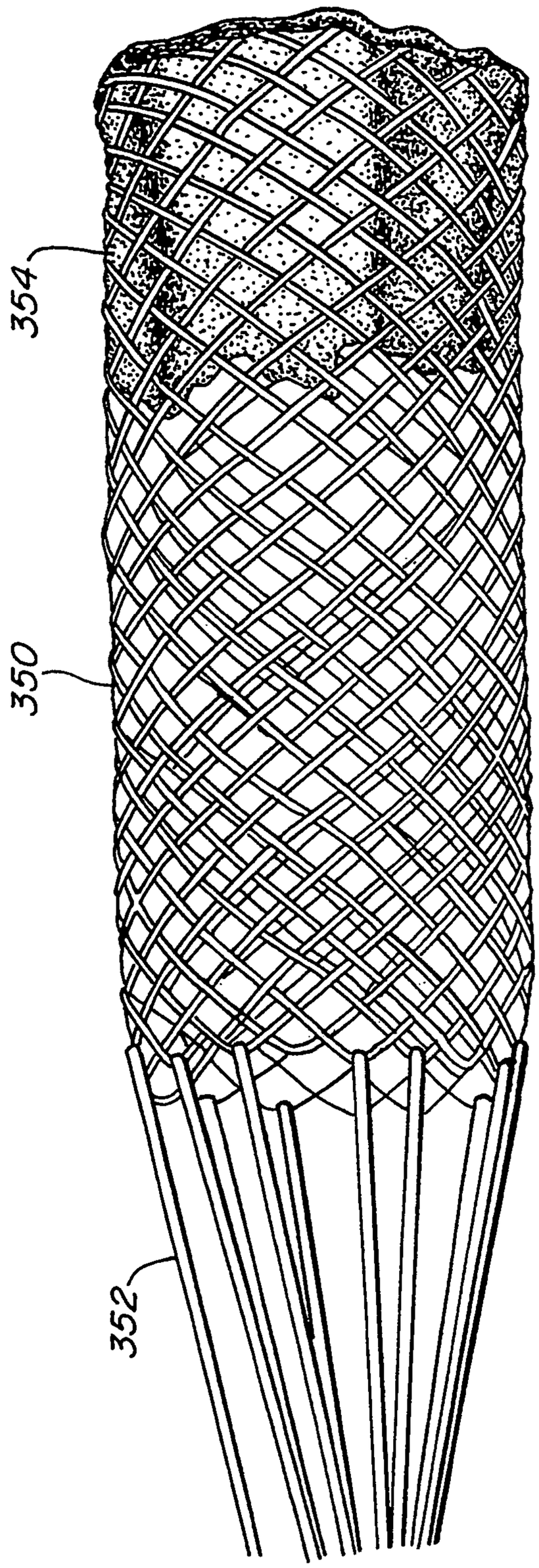

FIG. 23

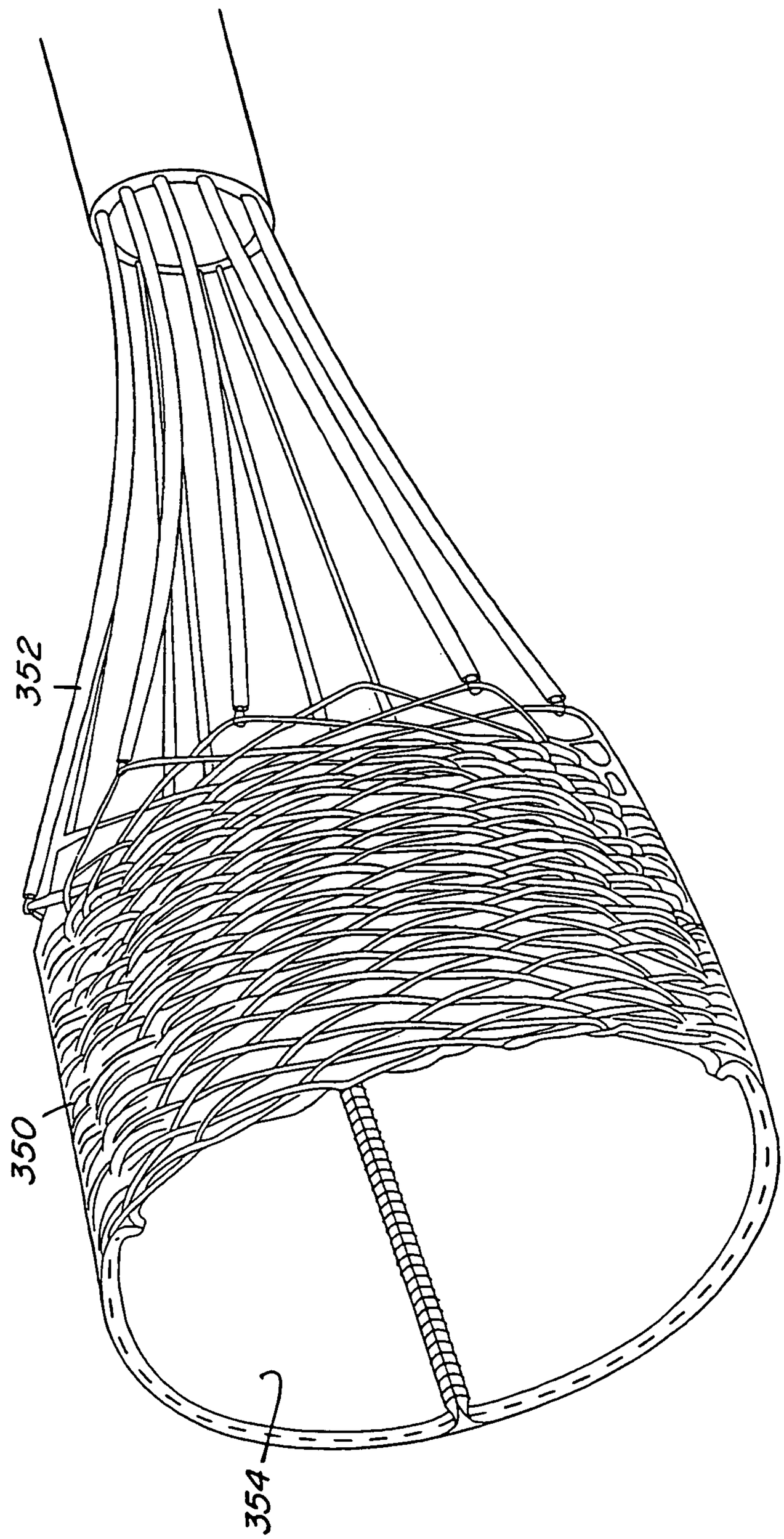

FIG. 24

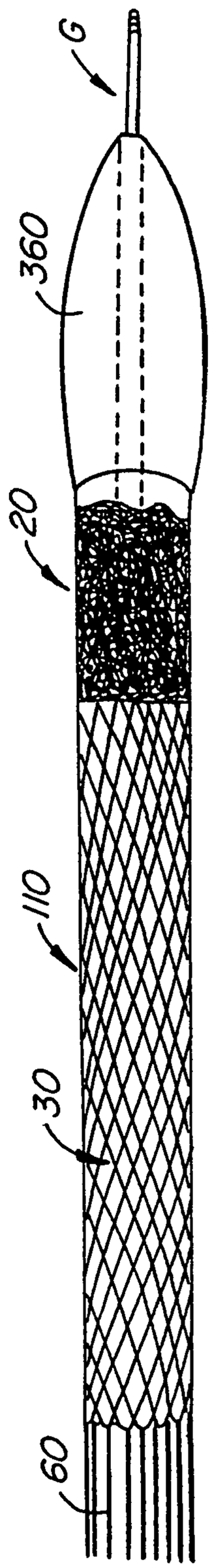

FIG. 25

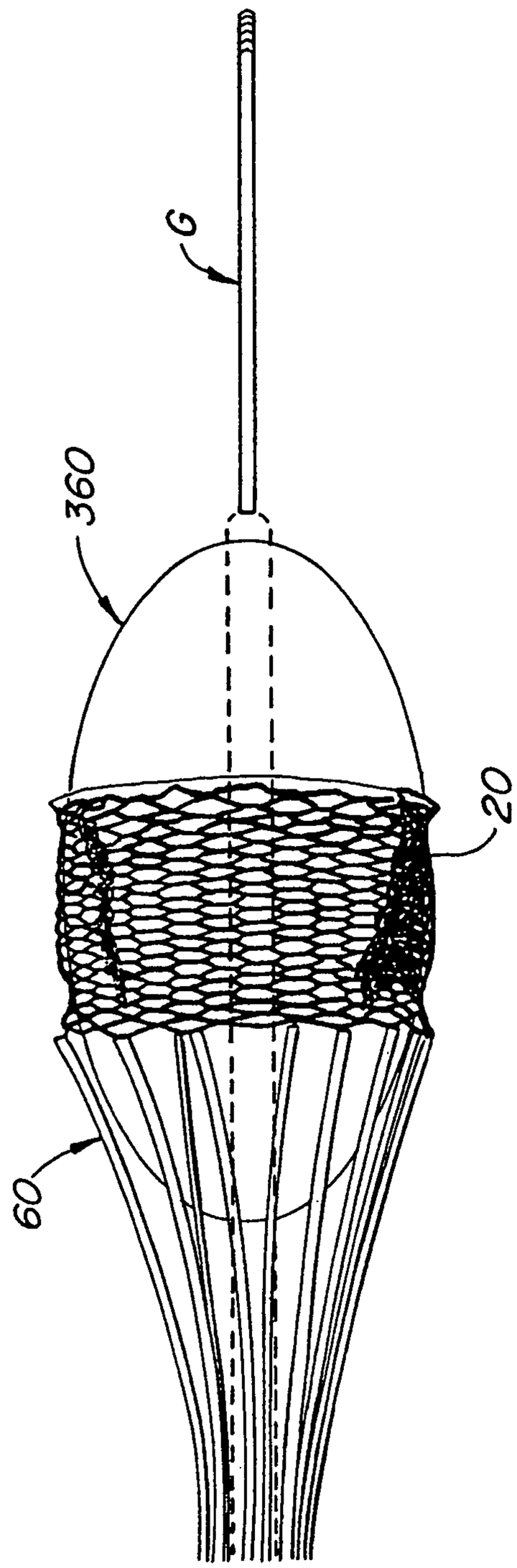

FIG. 26

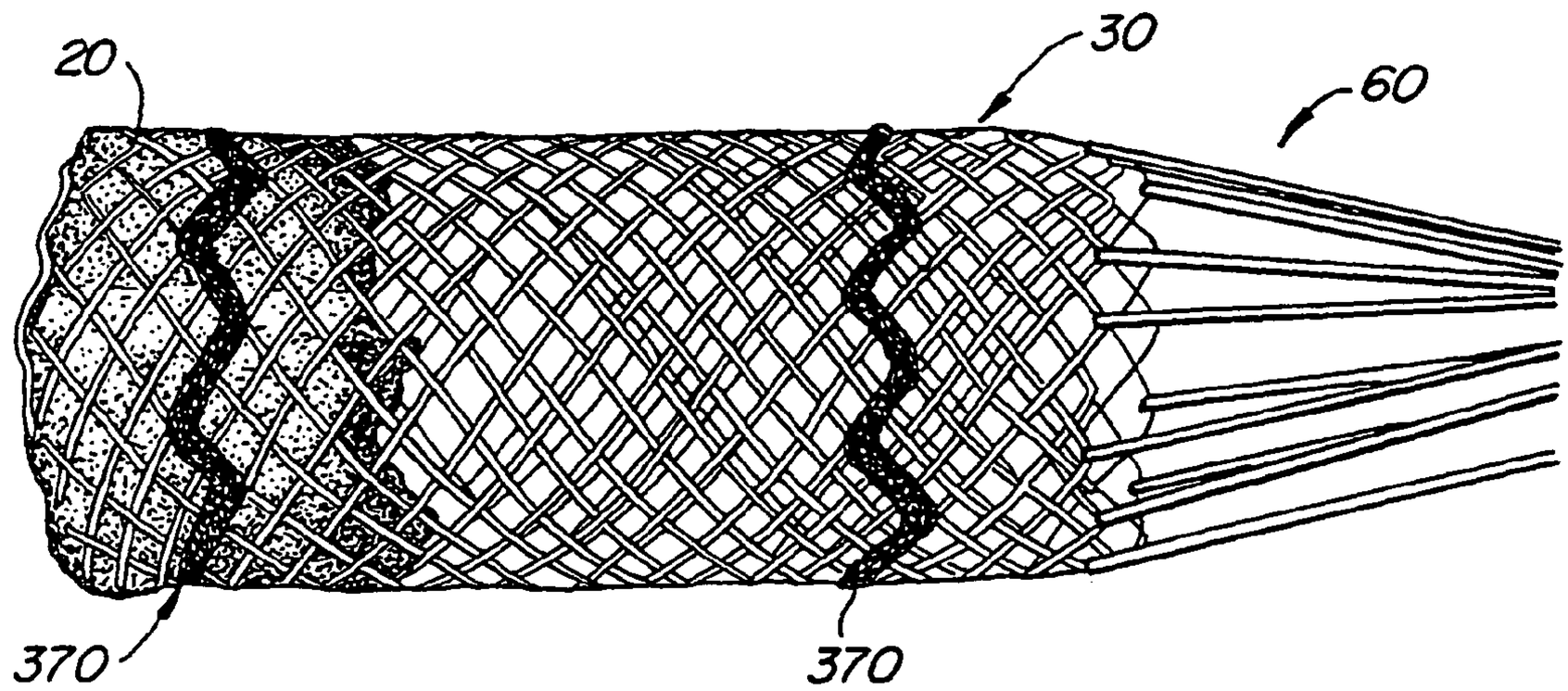

FIG. 27

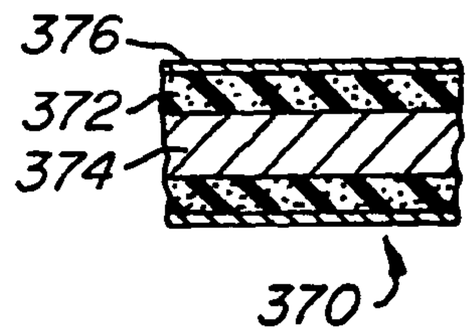

FIG. 28

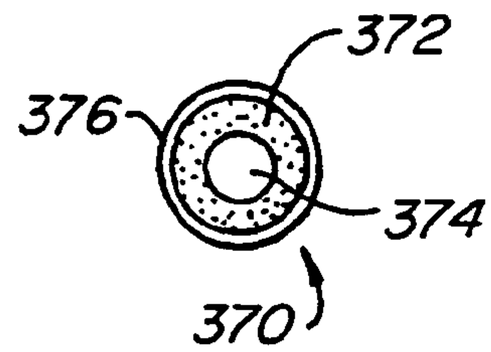

FIG. 29

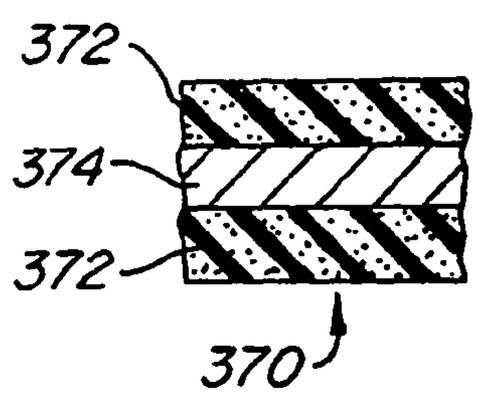

FIG. 30

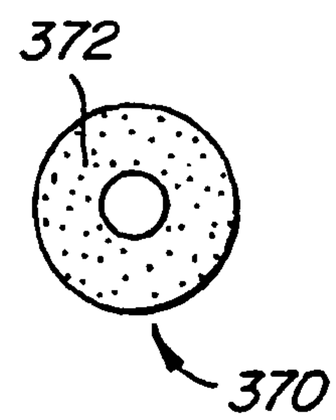

FIG. 31

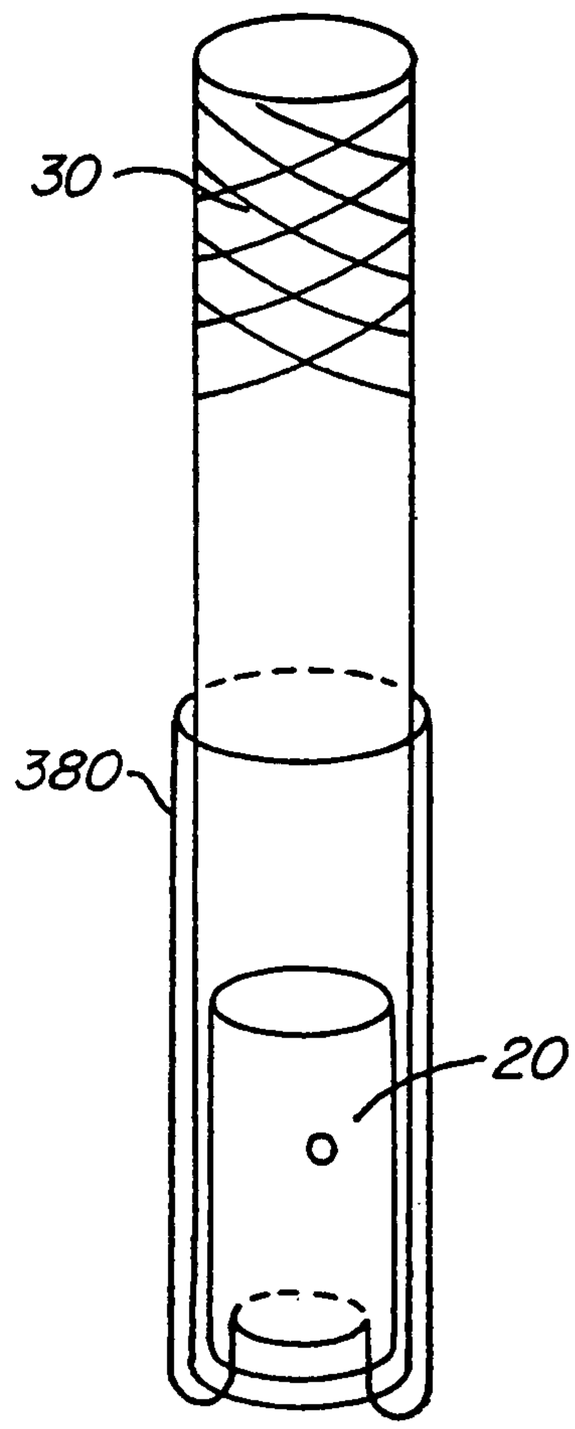

FIG. 32

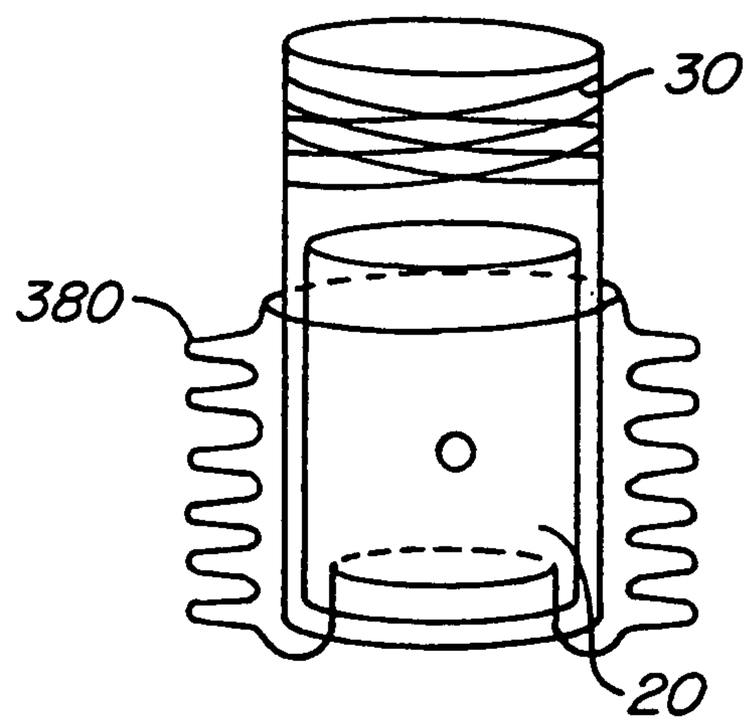

FIG. 33

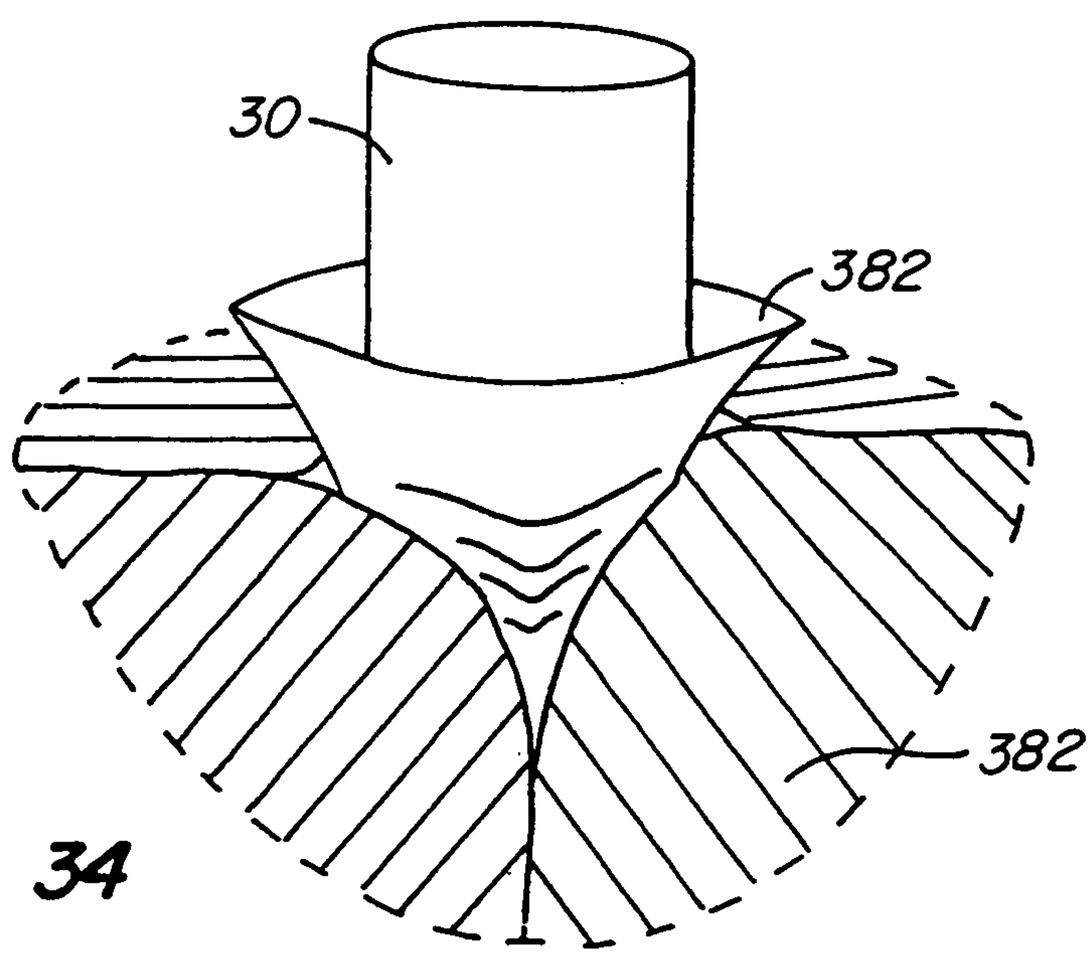

FIG. 34

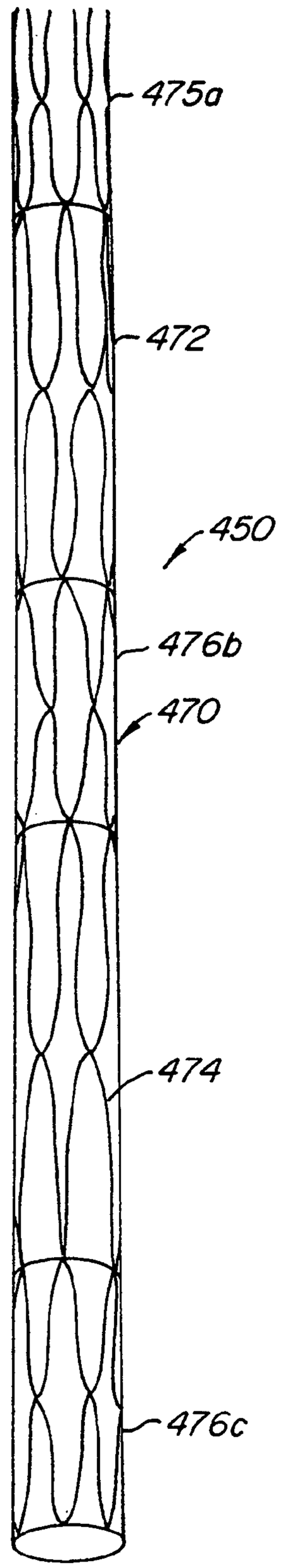

FIG. 35A

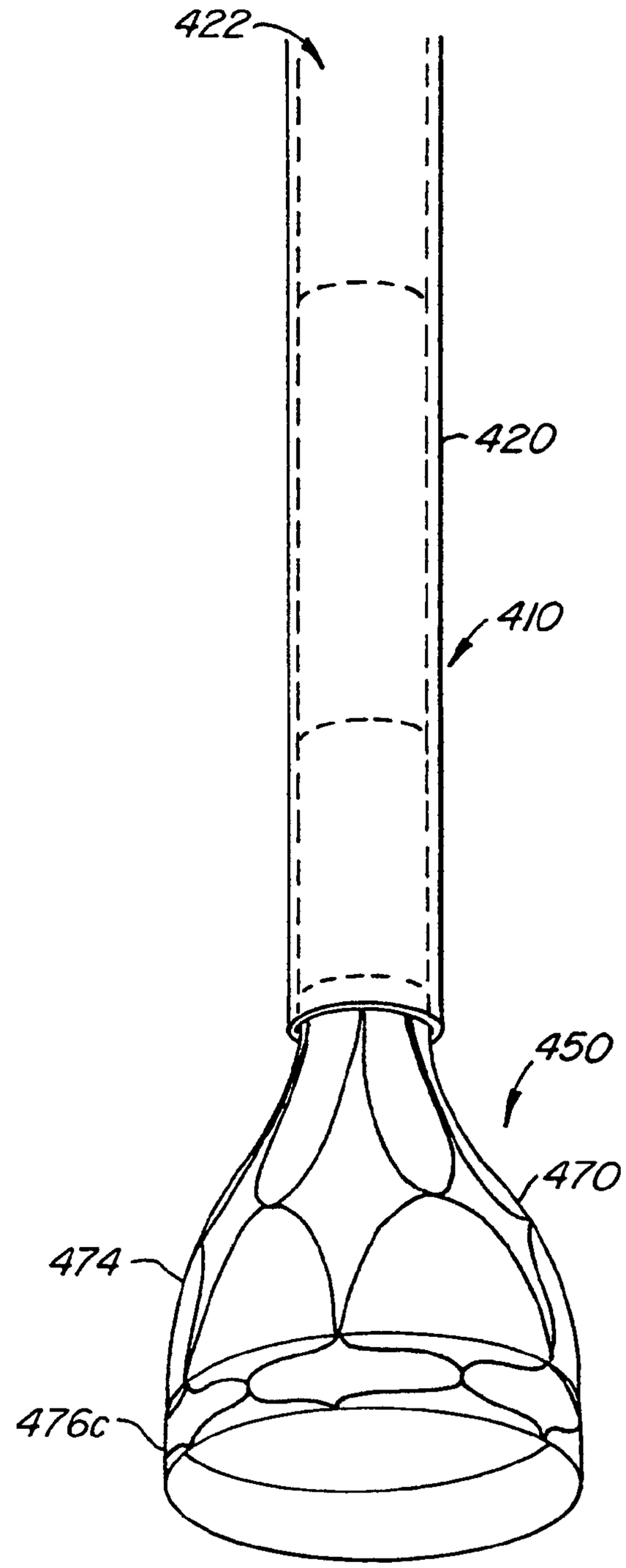

FIG. 35B

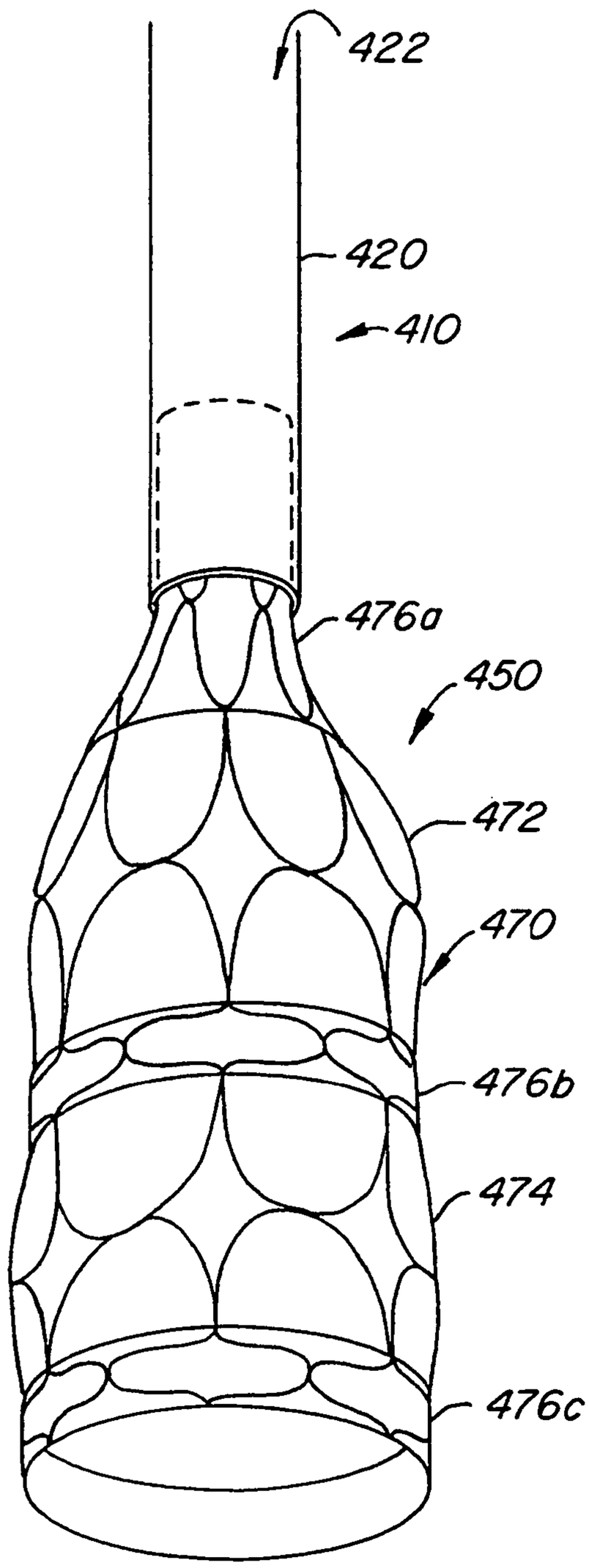

FIG. 35C

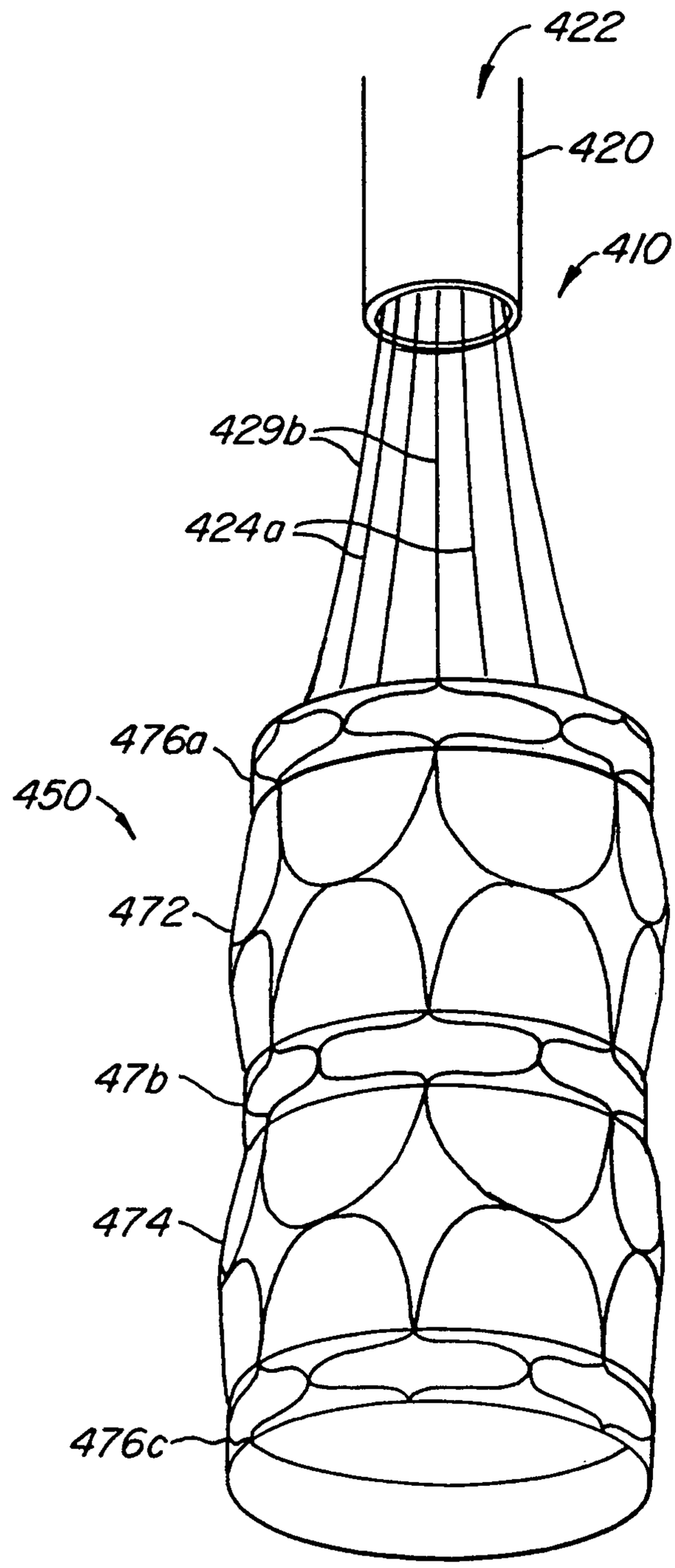

FIG. 35D

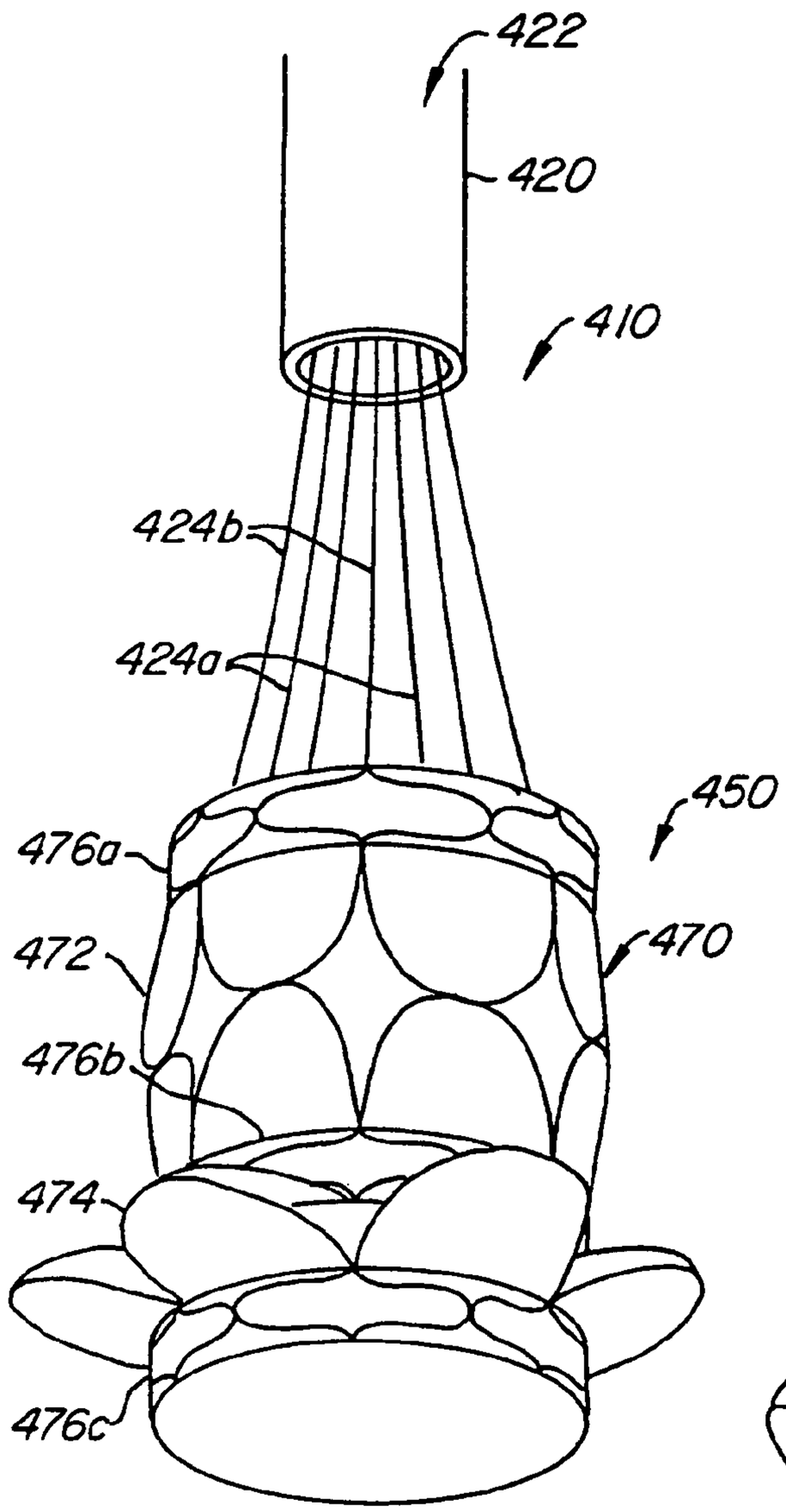

FIG. 35E

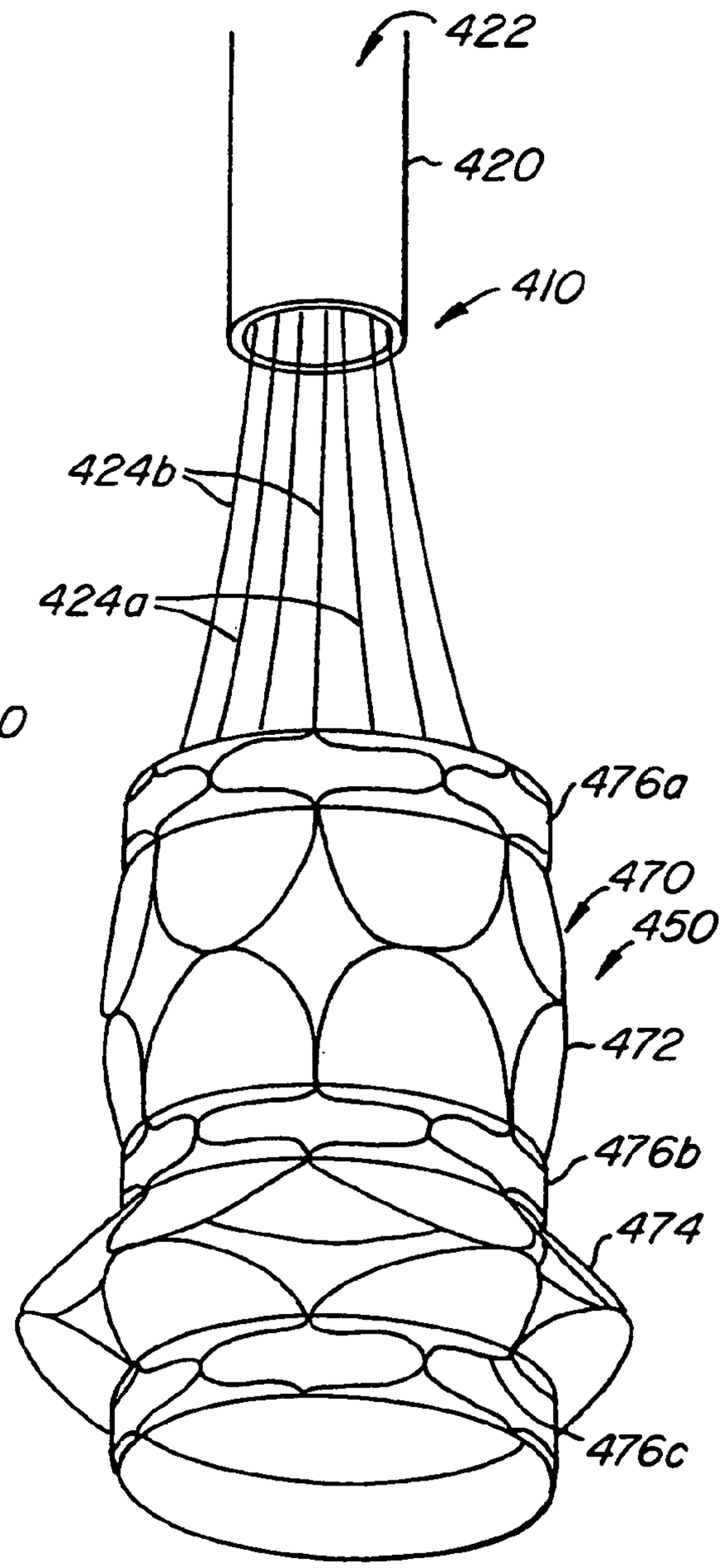

FIG. 35F

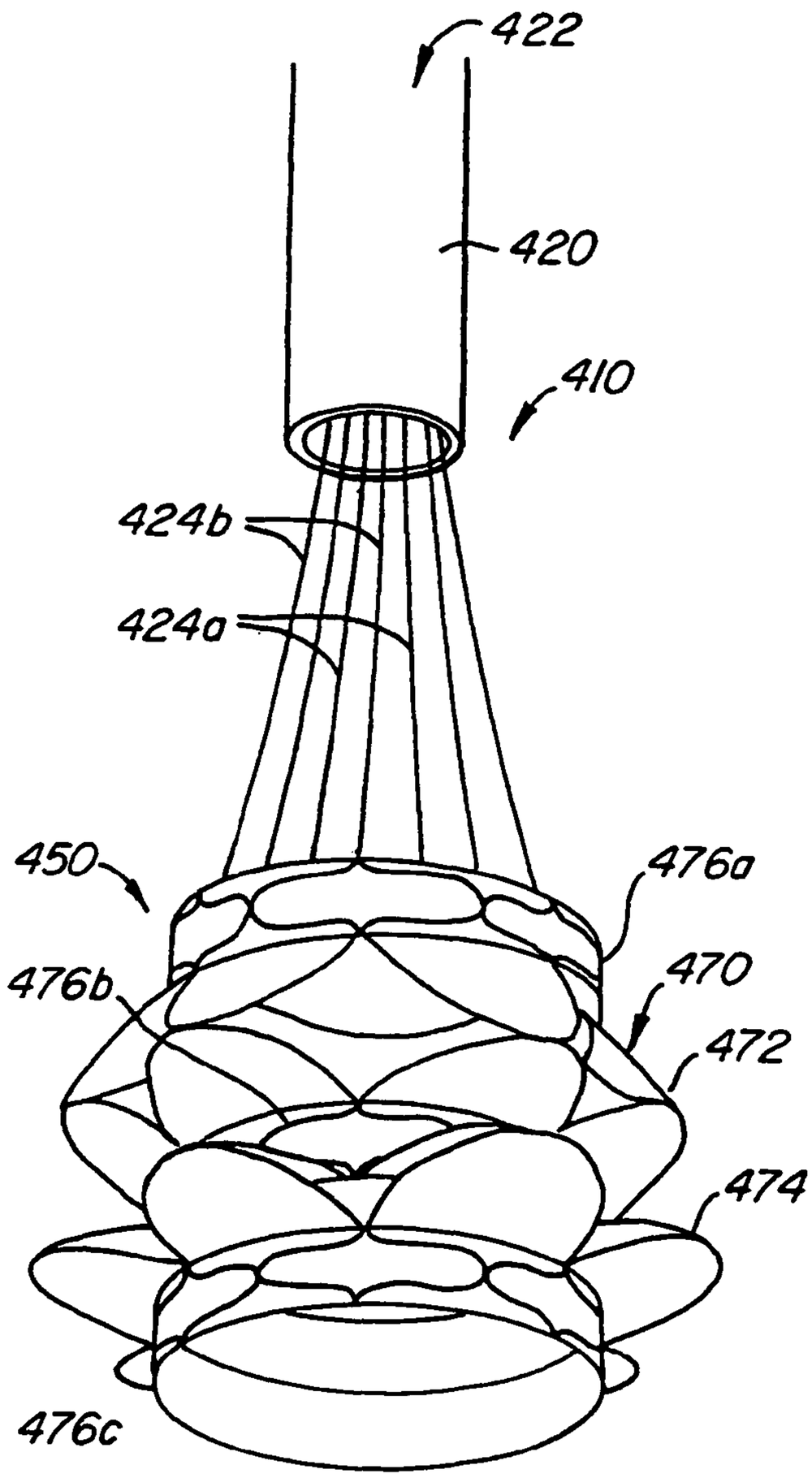

FIG. 35G

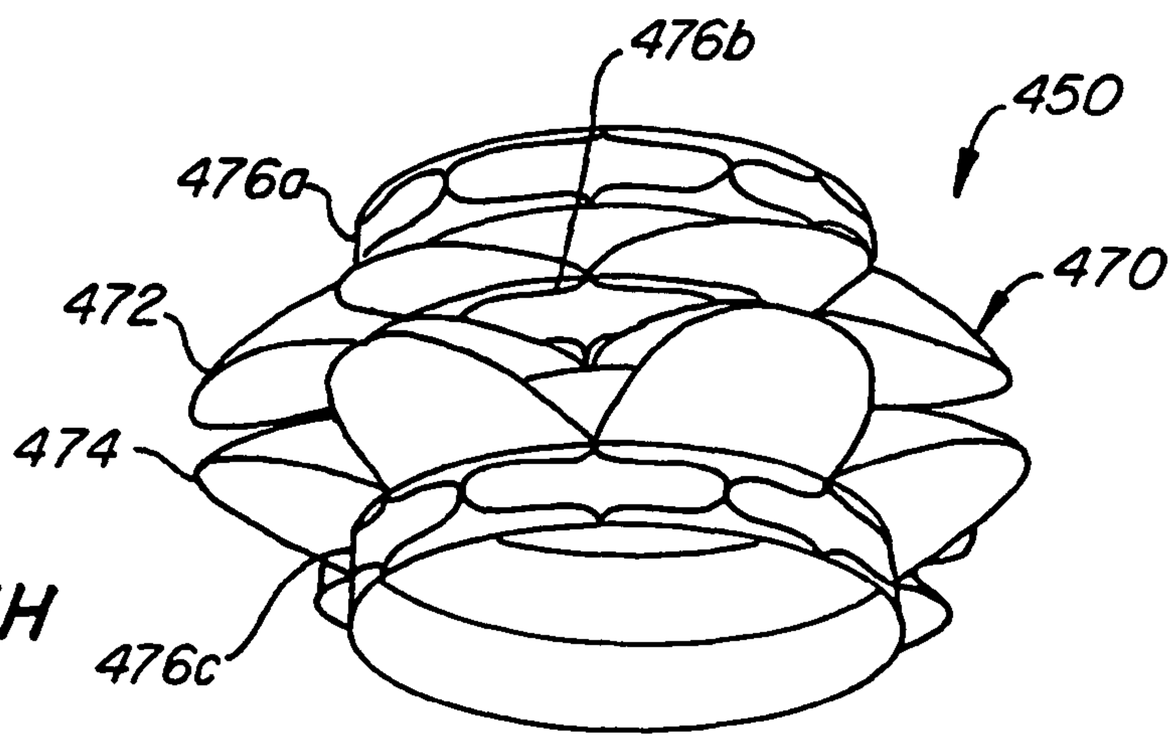

FIG. 35H

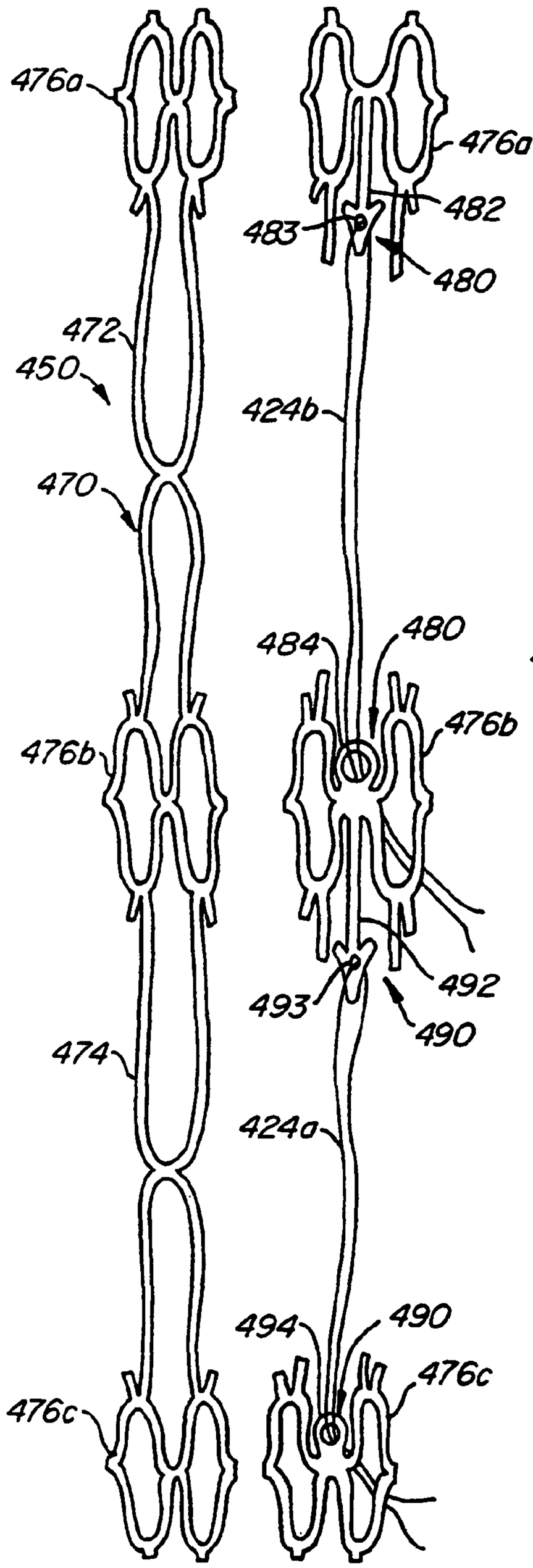

FIG. 36A

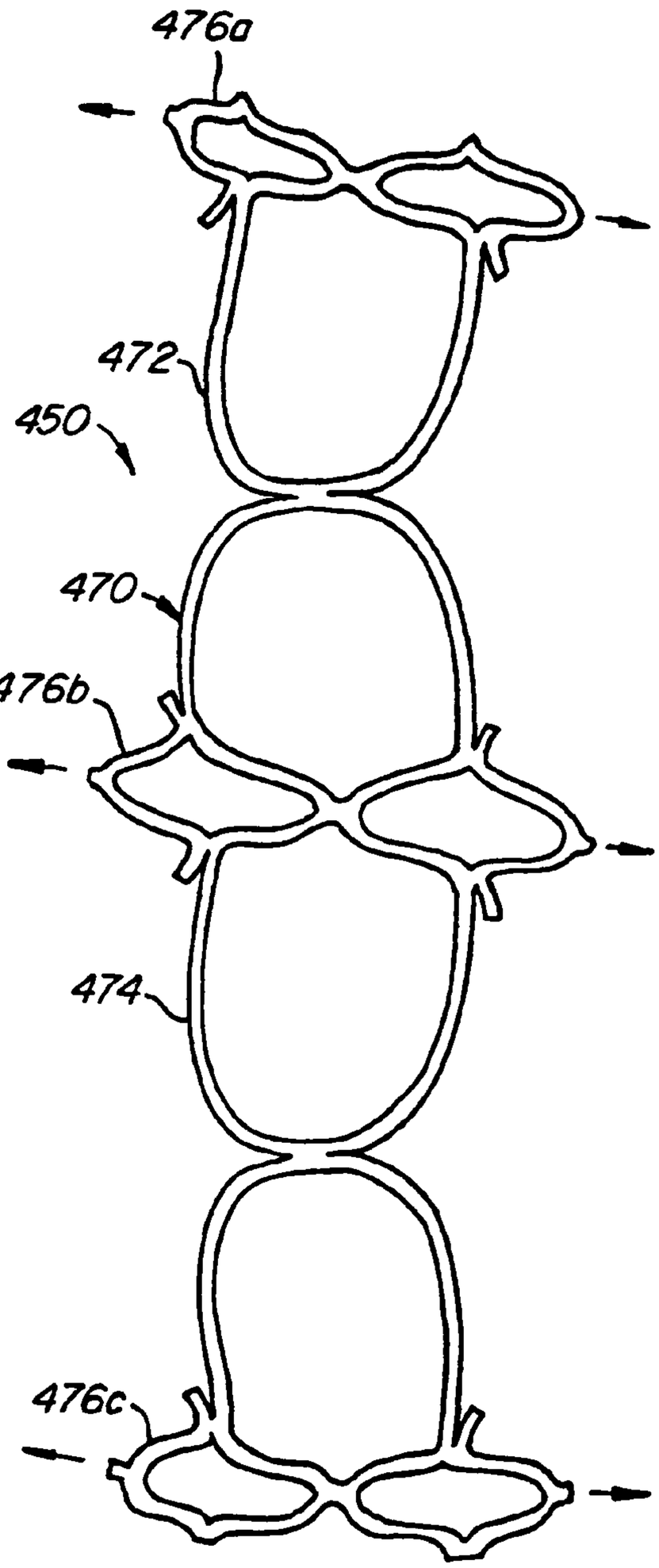

FIG. 36B

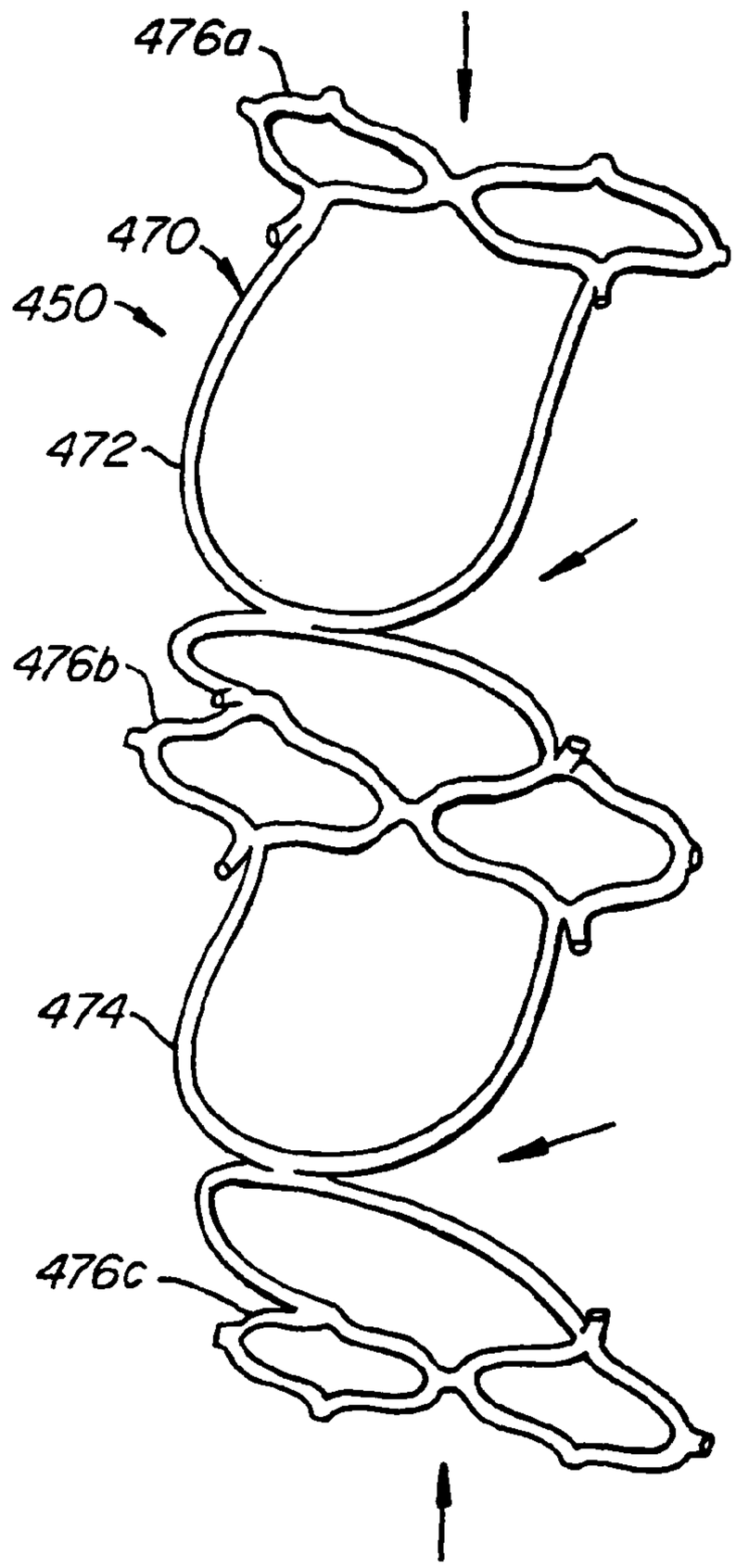

FIG. 36C

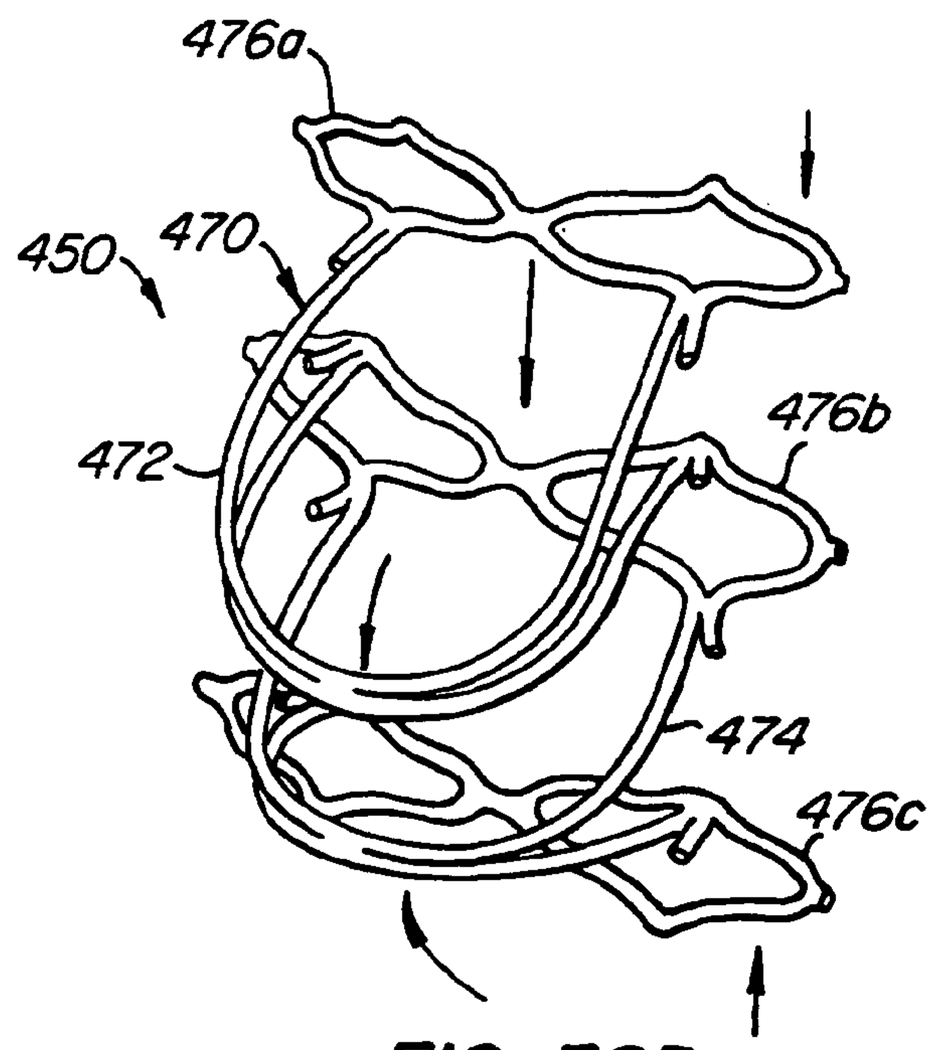

FIG. 36D

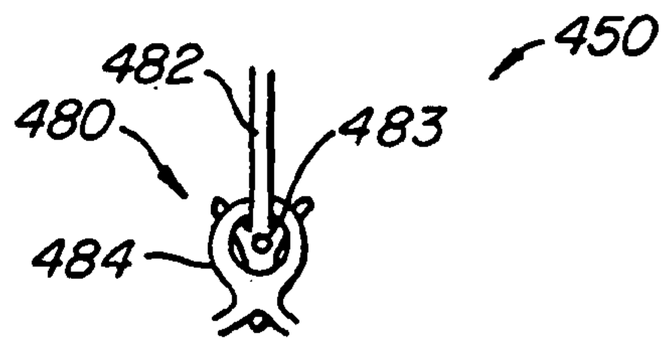

FIG. 36E

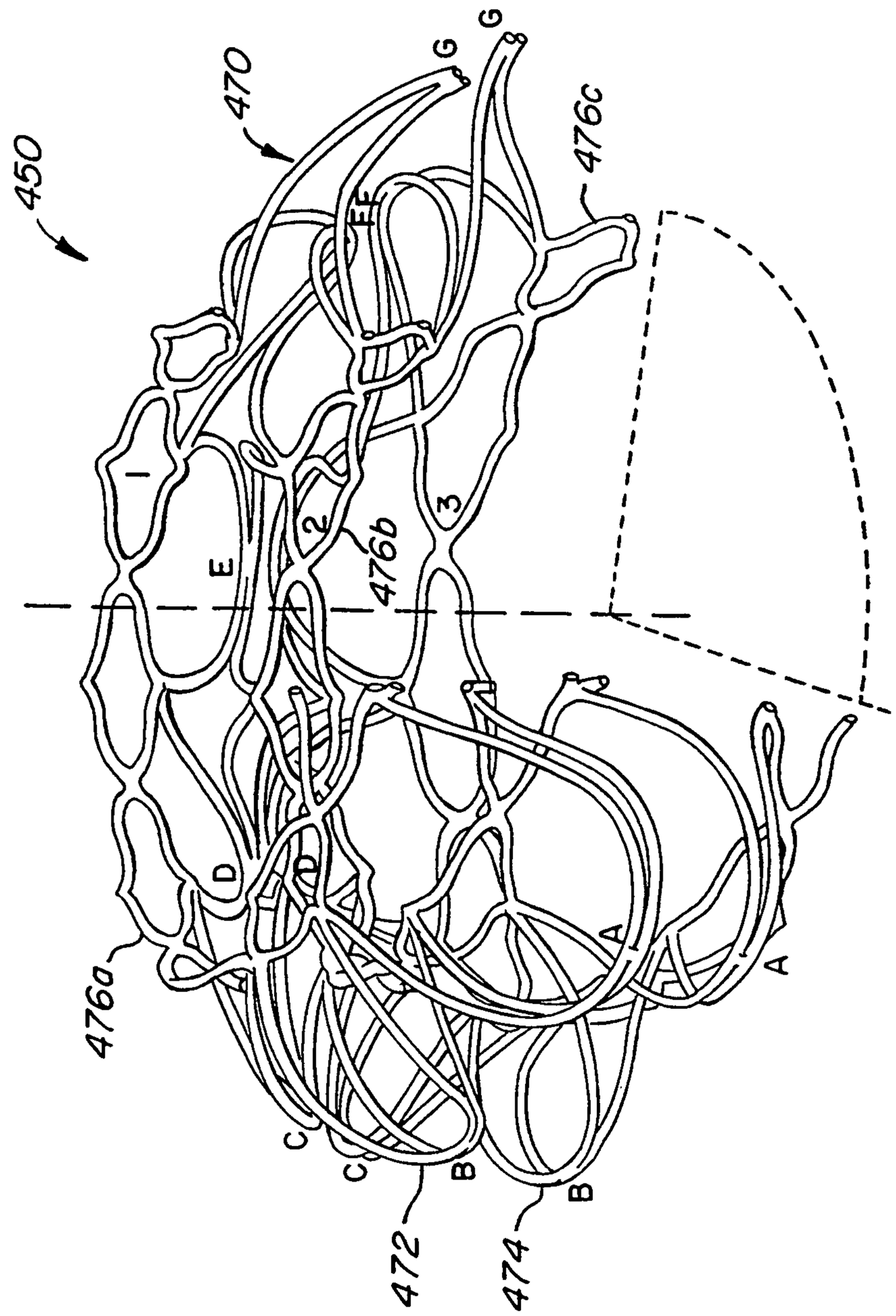

FIG. 37A

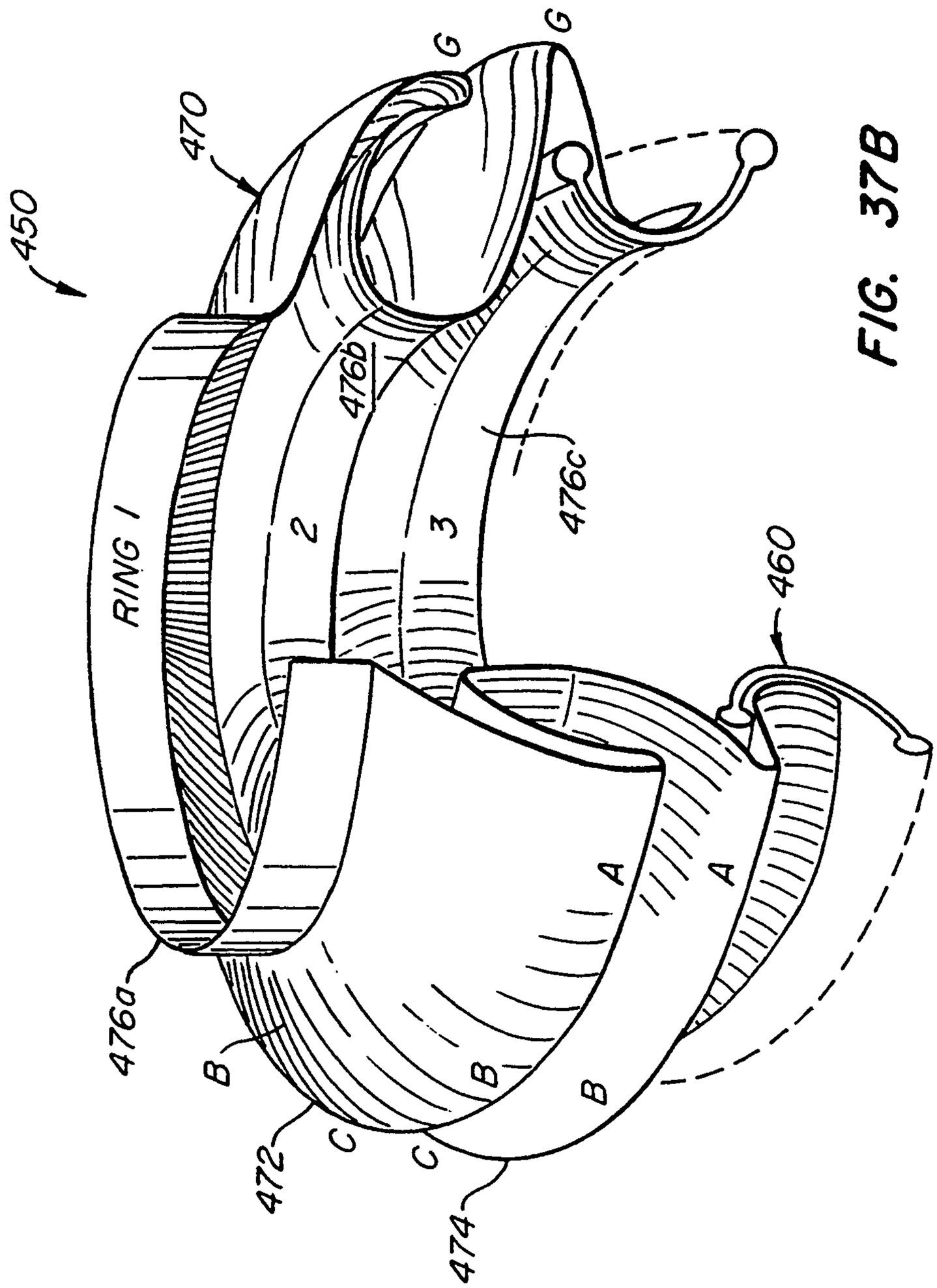

FIG. 37B

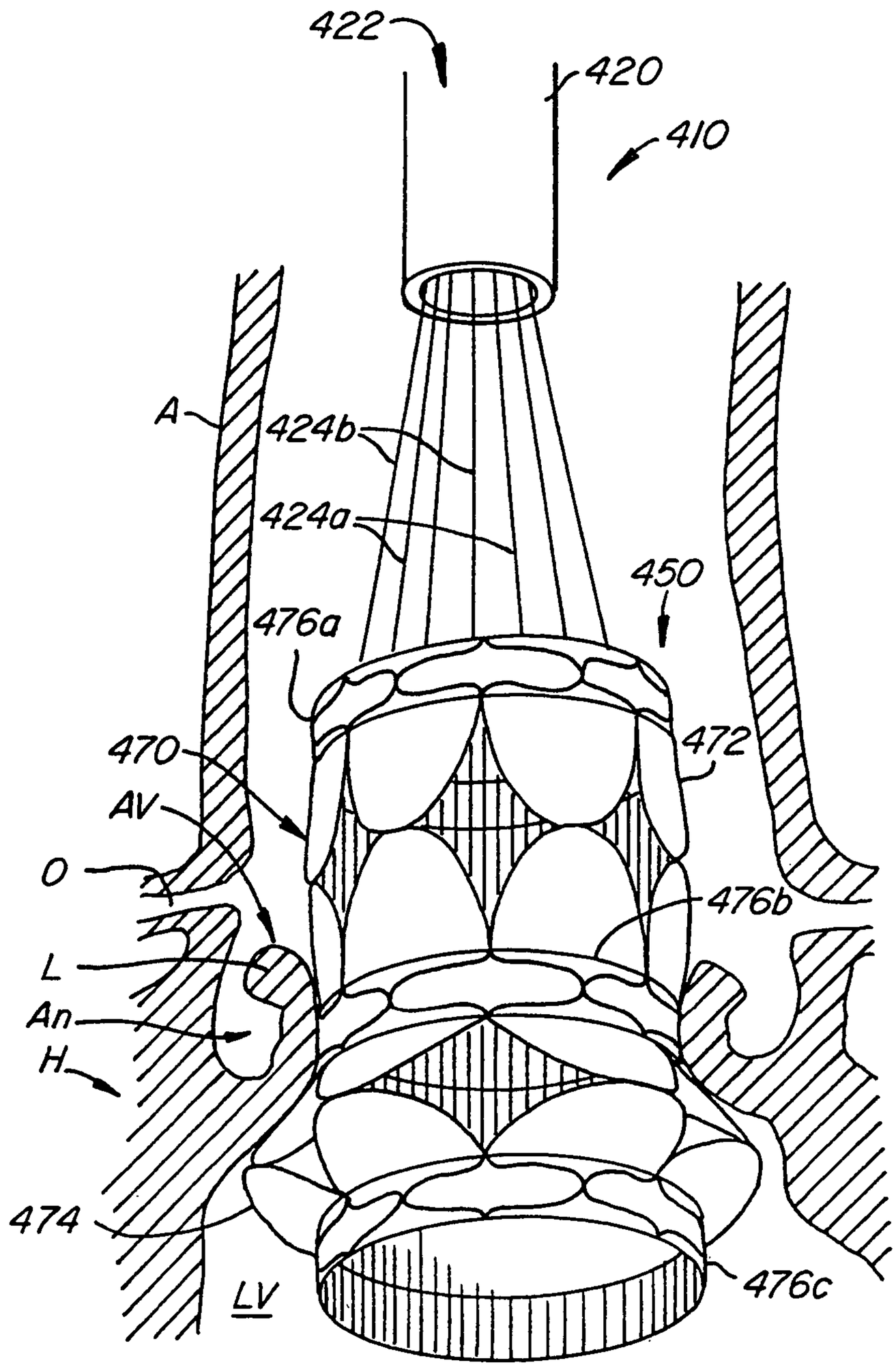
422
420
410
A
424b
424a
450
476a
470
472
AV
O
476b
L
An
H
474
LV
476c

FIG. 38A

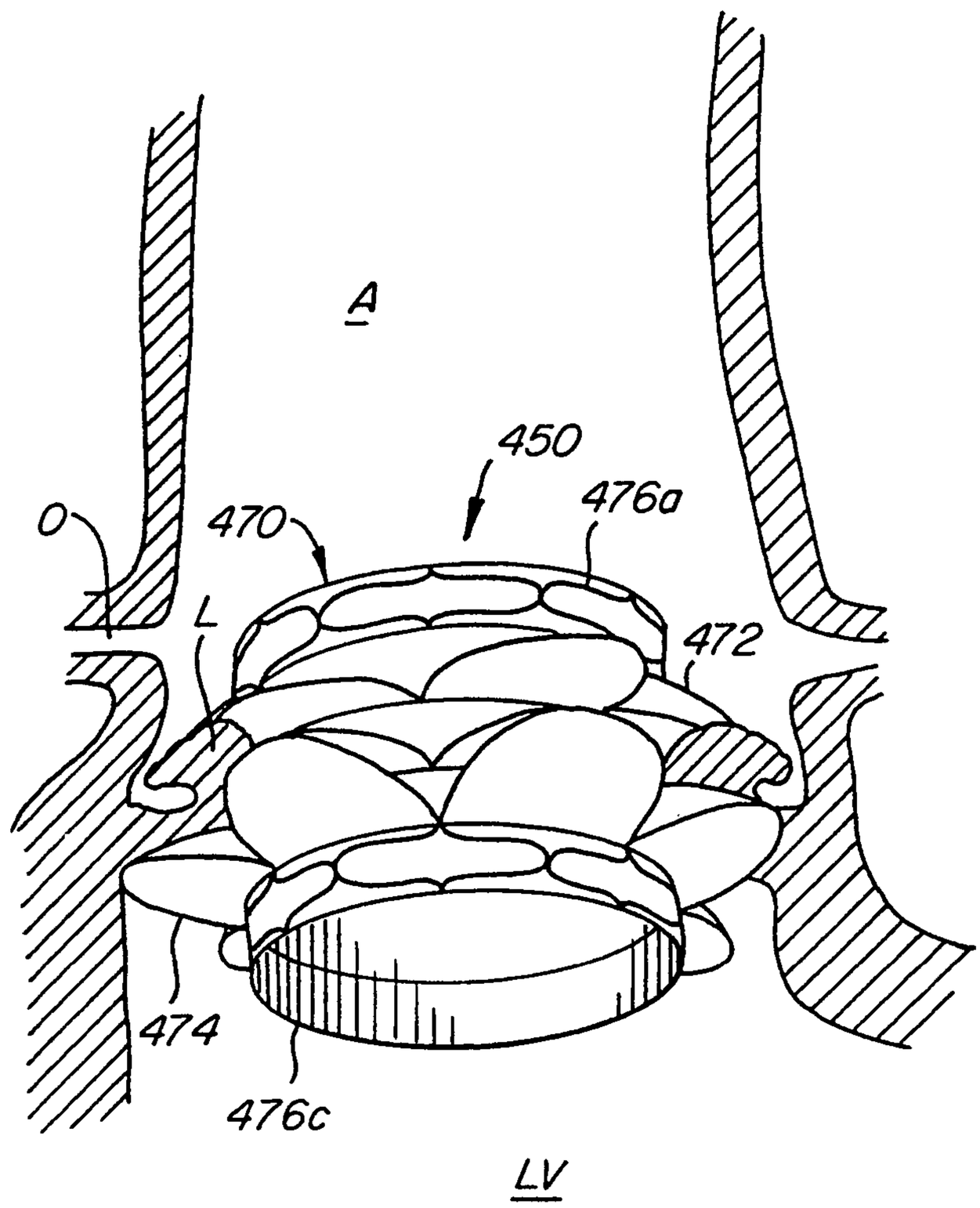

FIG. 38B

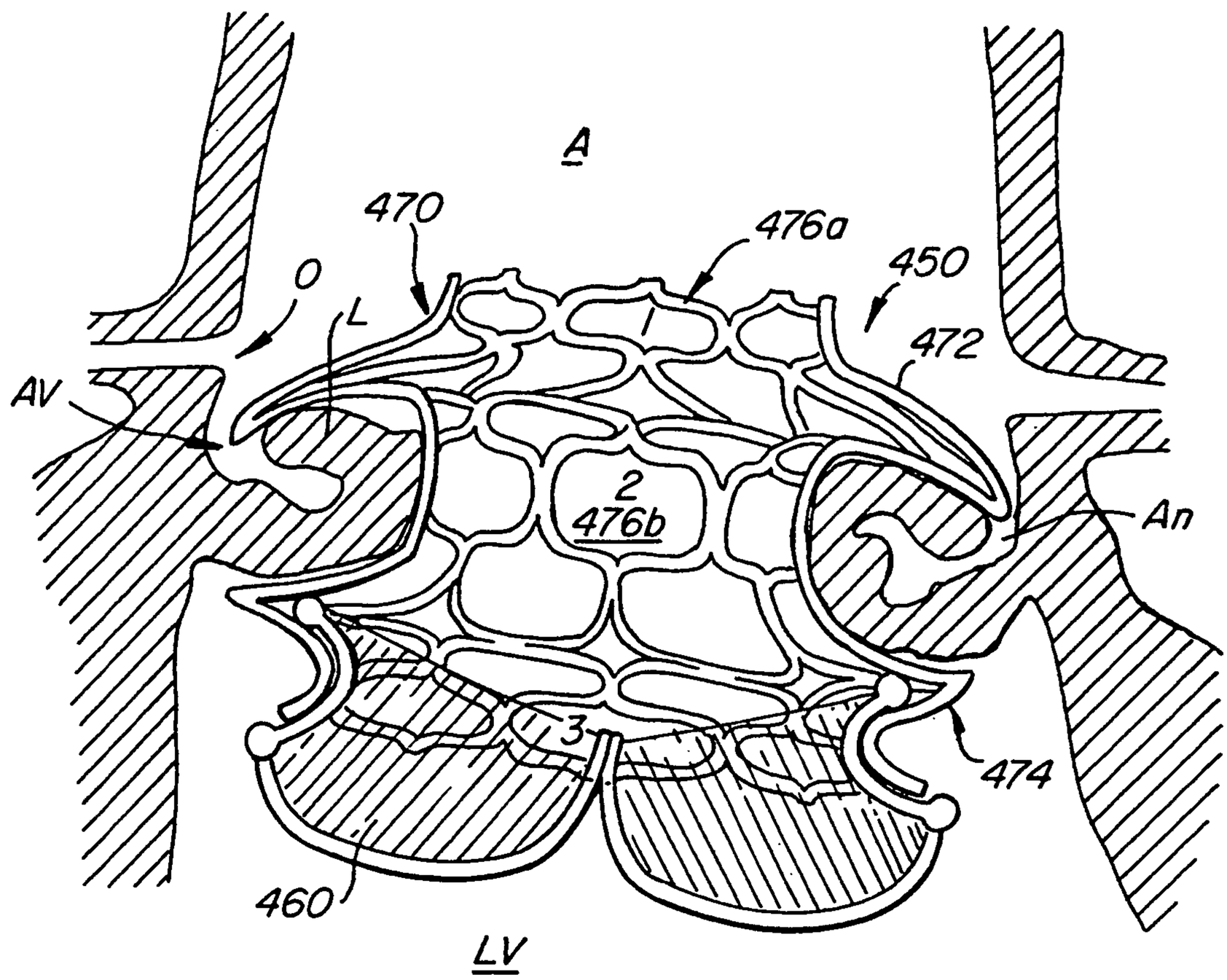

FIG. 38C

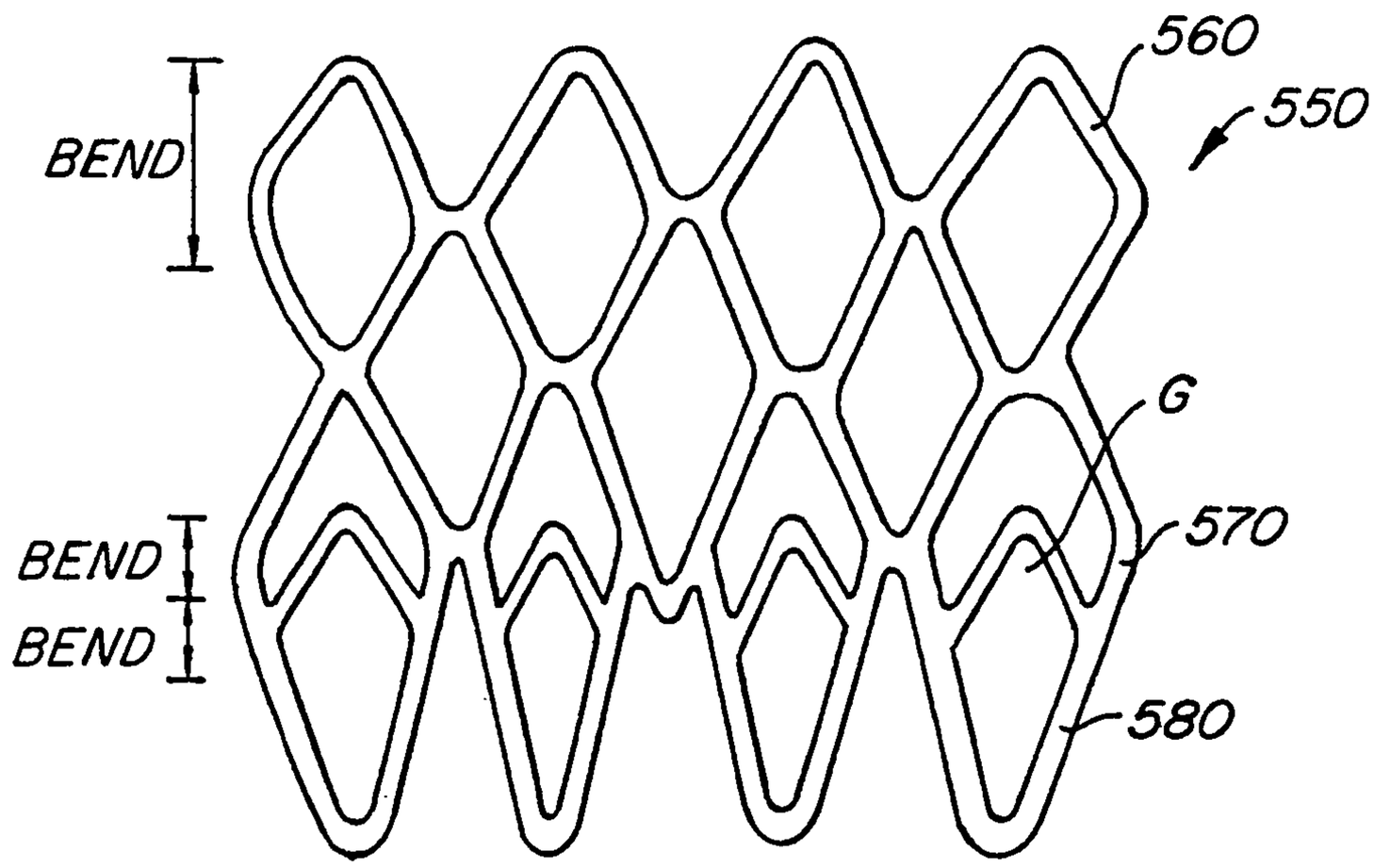

FIG. 39A

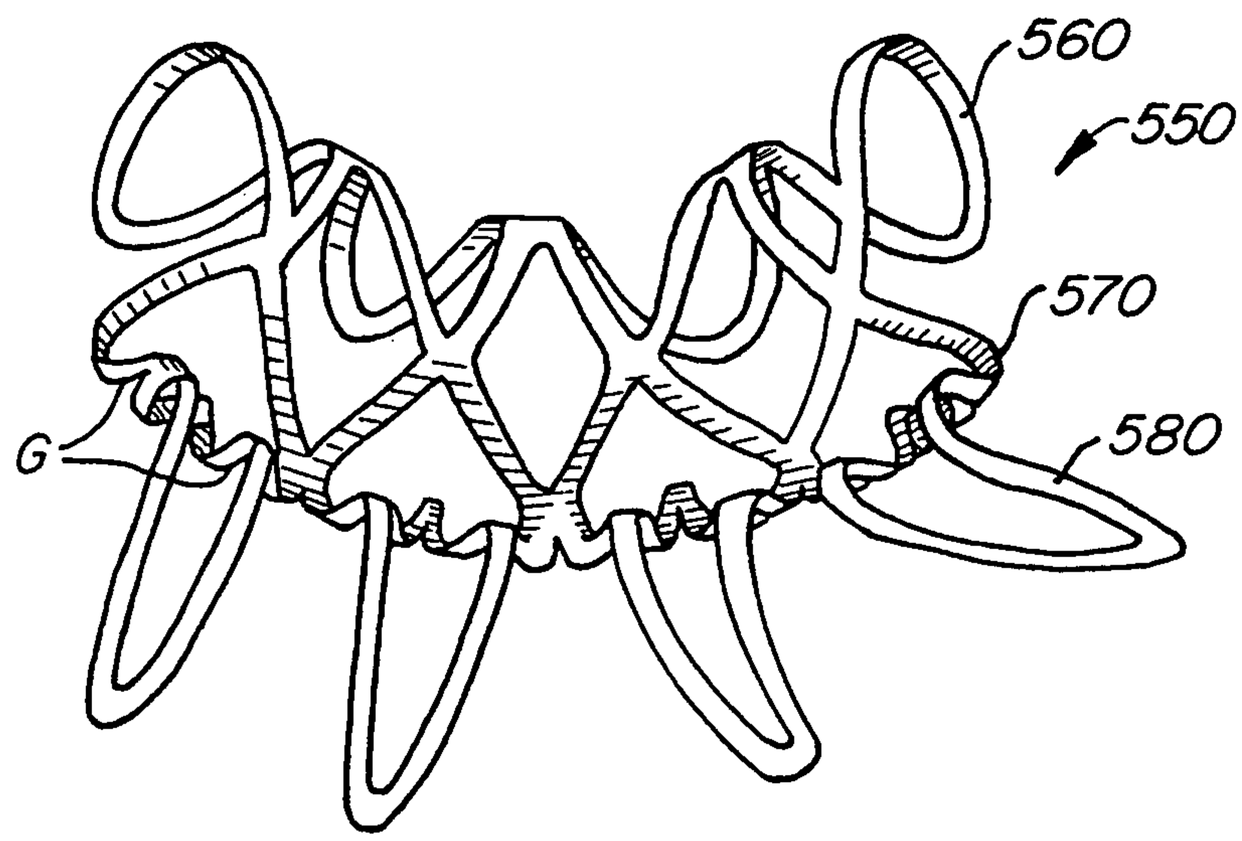

FIG. 39B

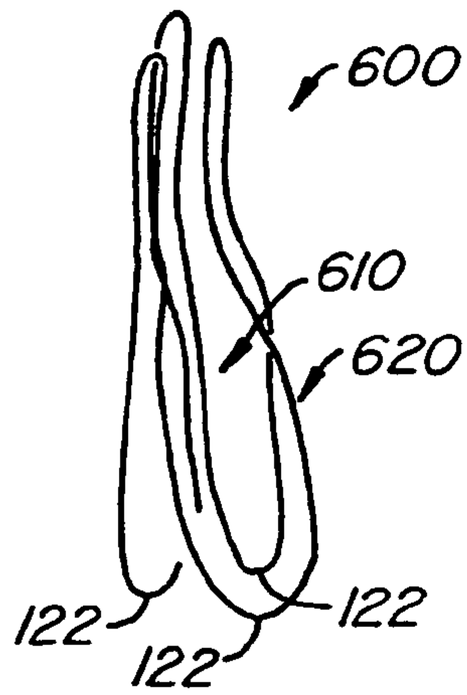

FIG. 40A

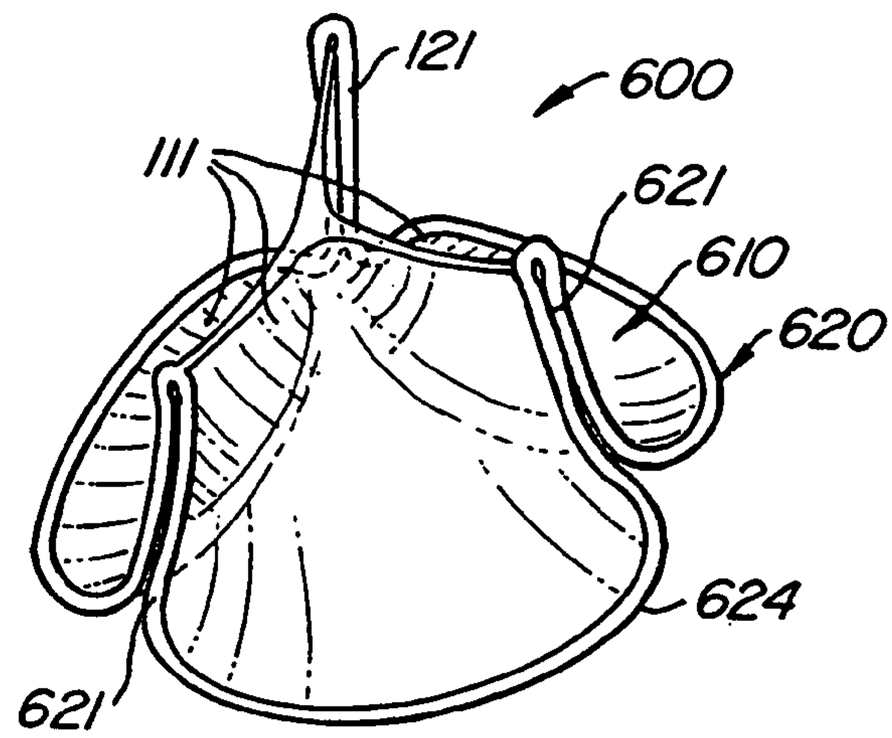

FIG. 40B

FIG. 41A

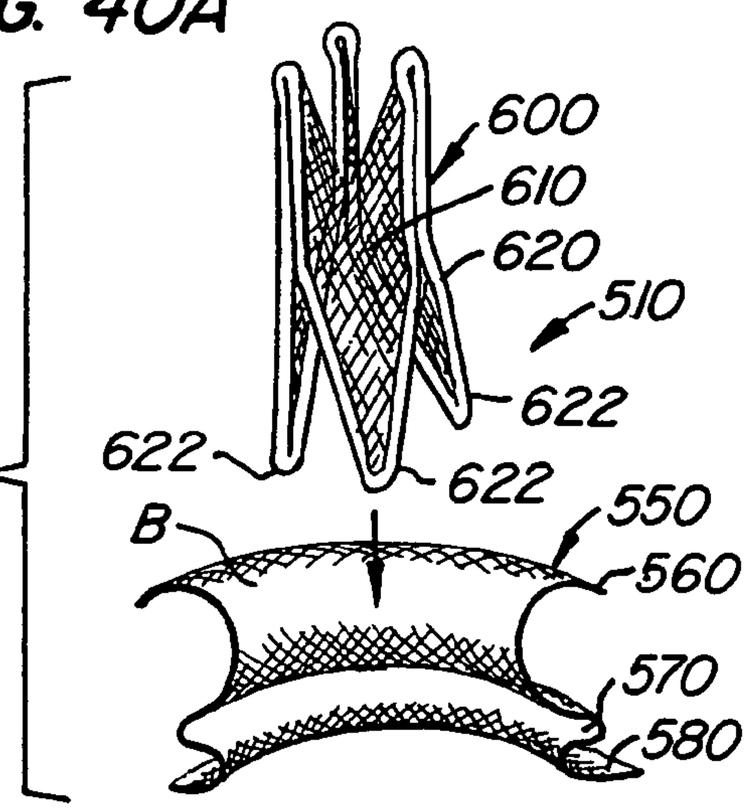

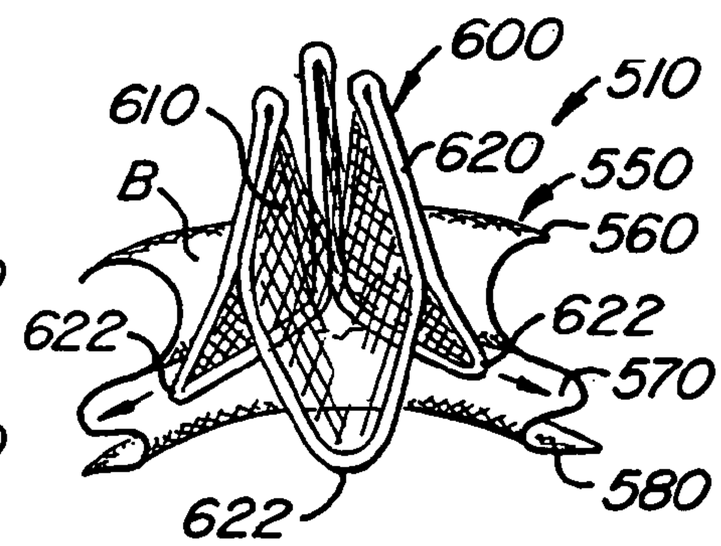

FIG. 41B

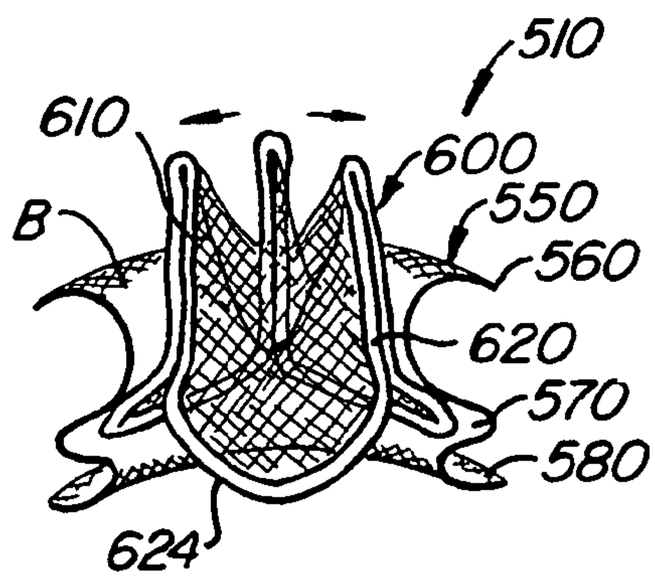

FIG. 41C

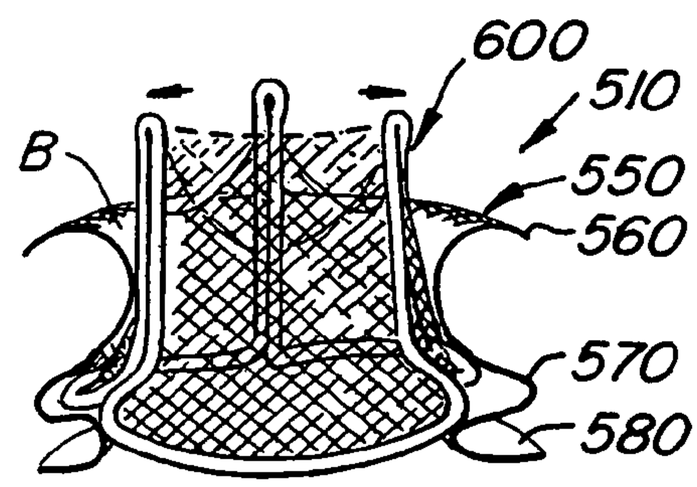

FIG. 41D

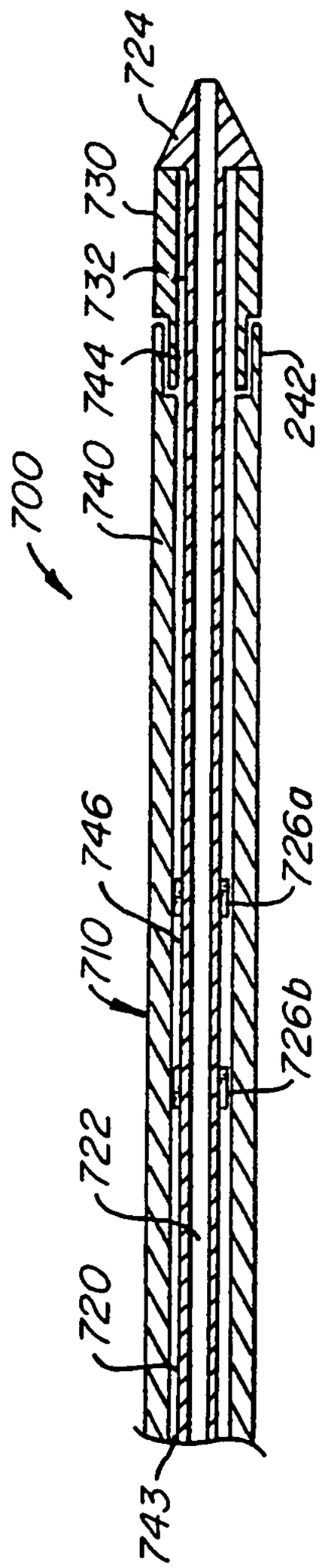

FIG. 42

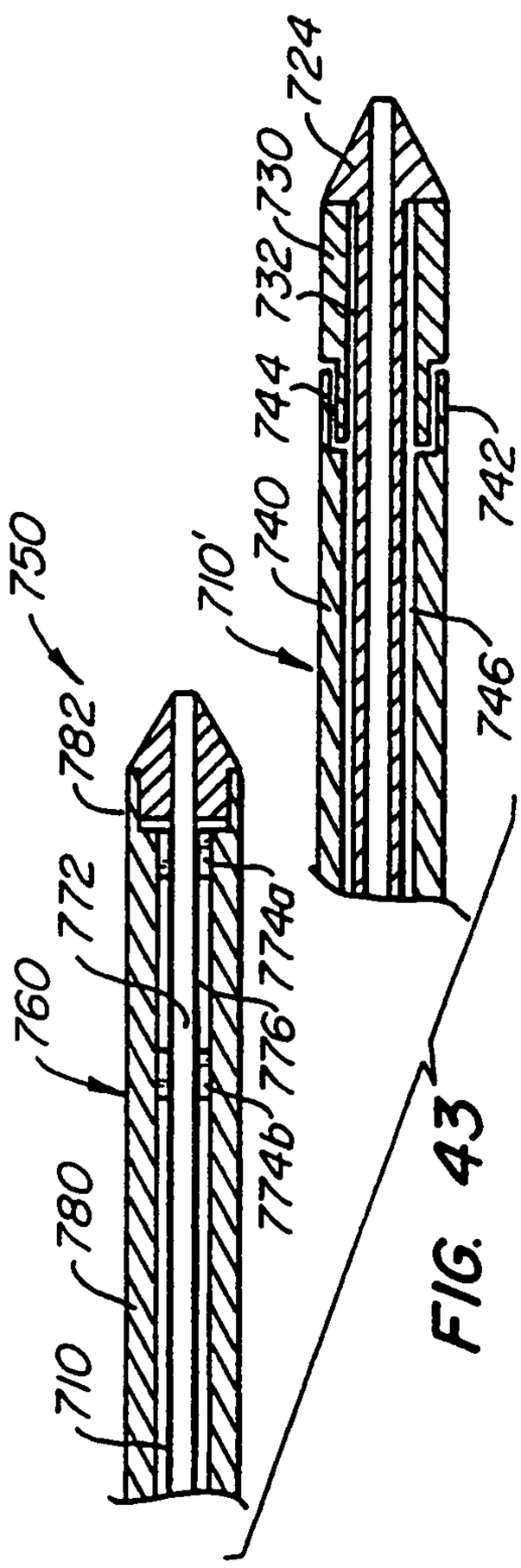

FIG. 43

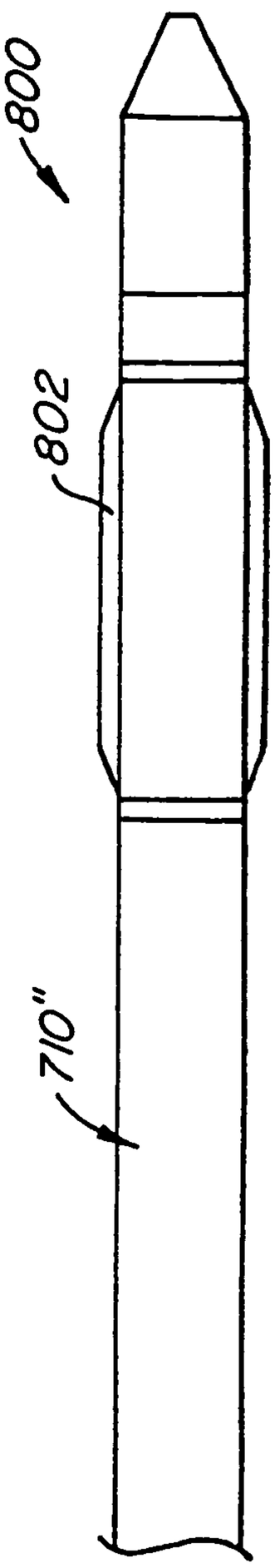

FIG. 44

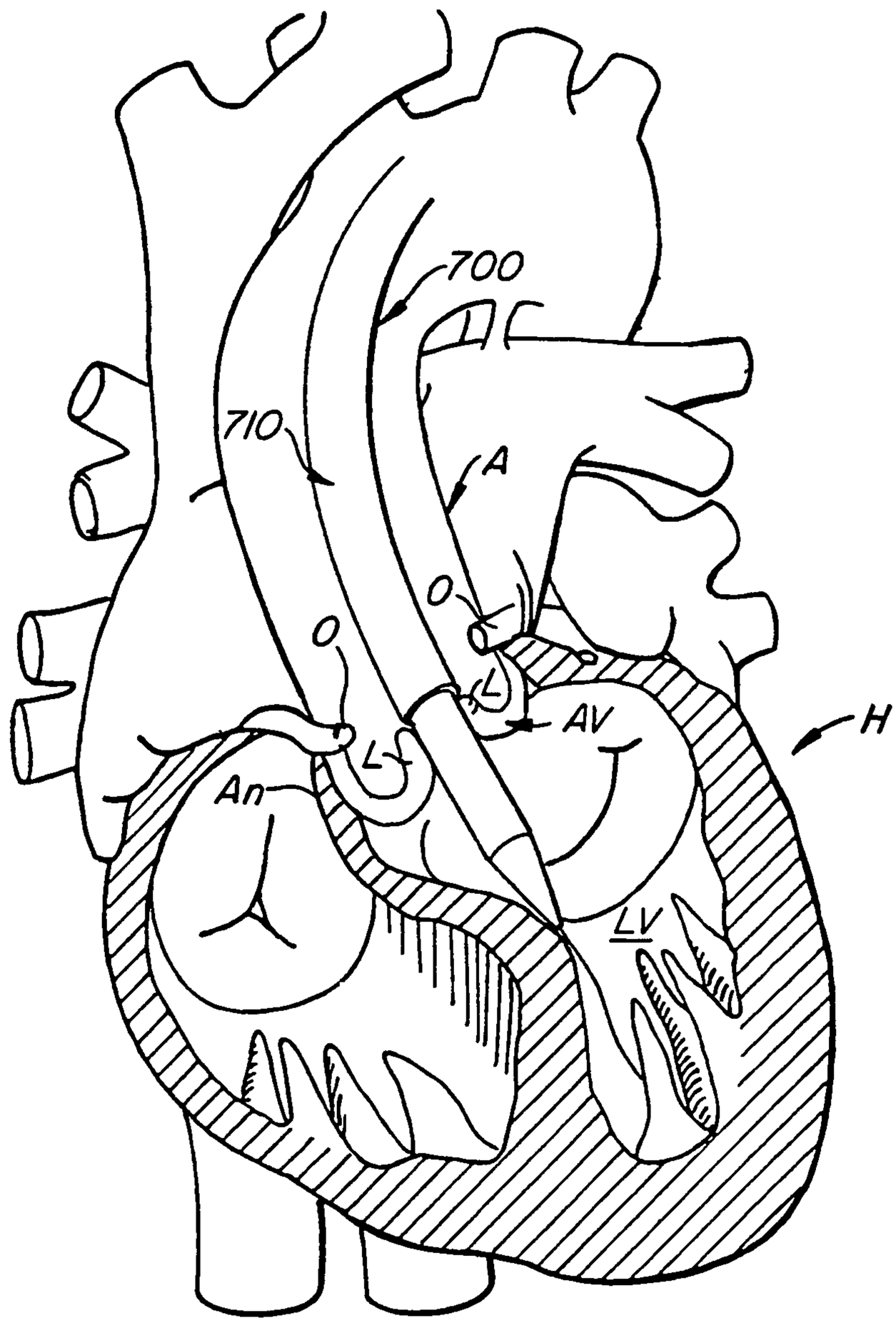

FIG. 45A

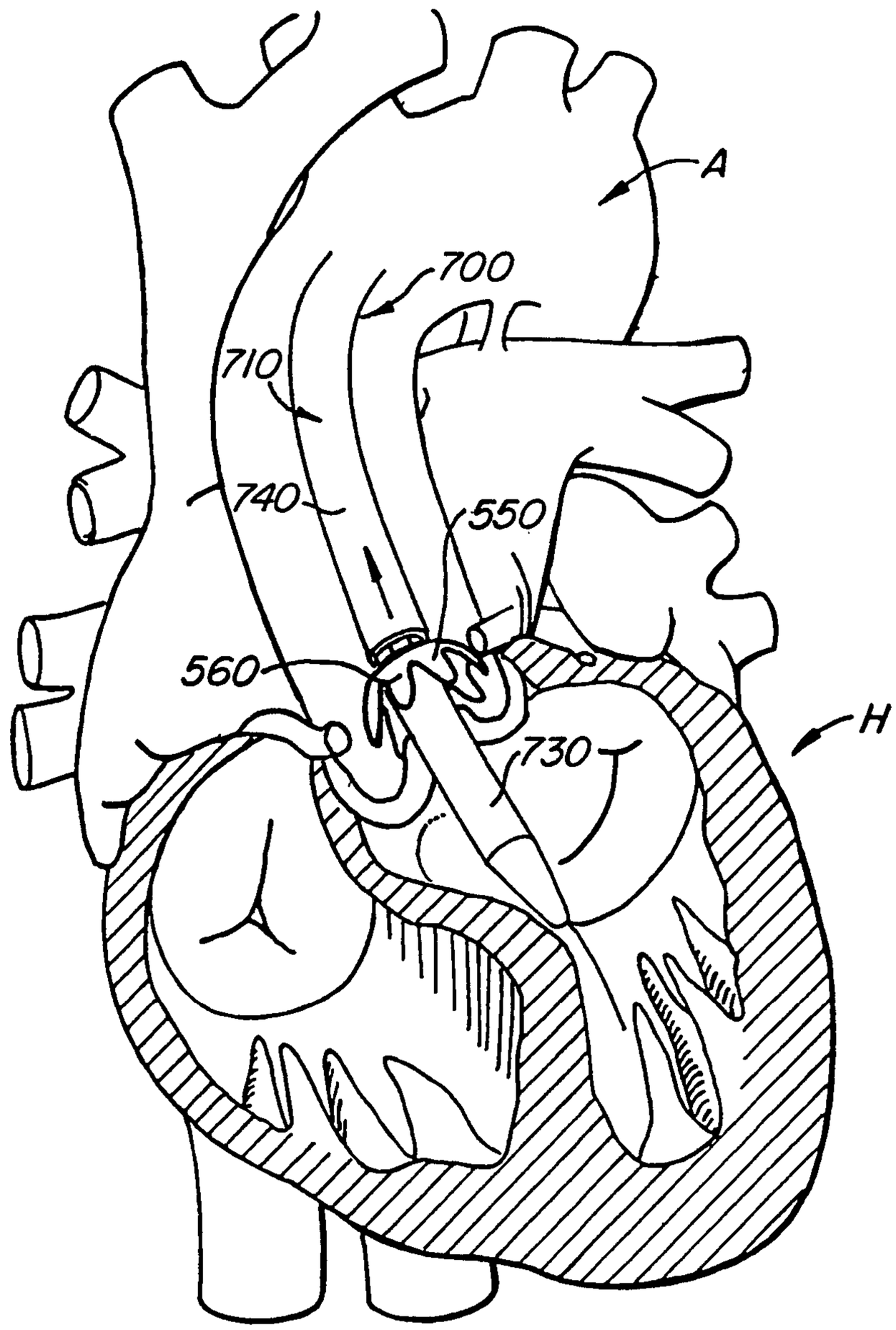

FIG. 45B

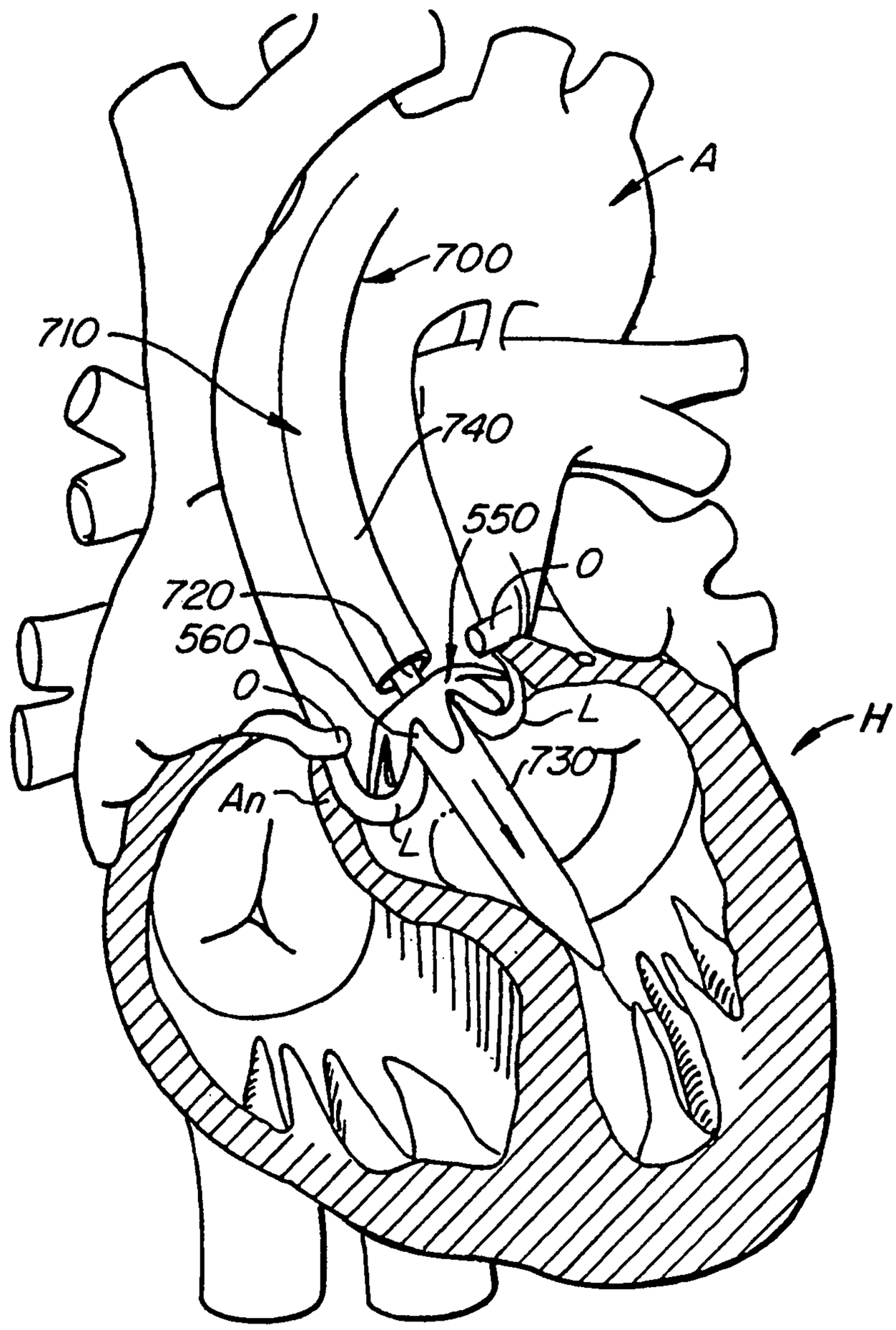

FIG. 45C

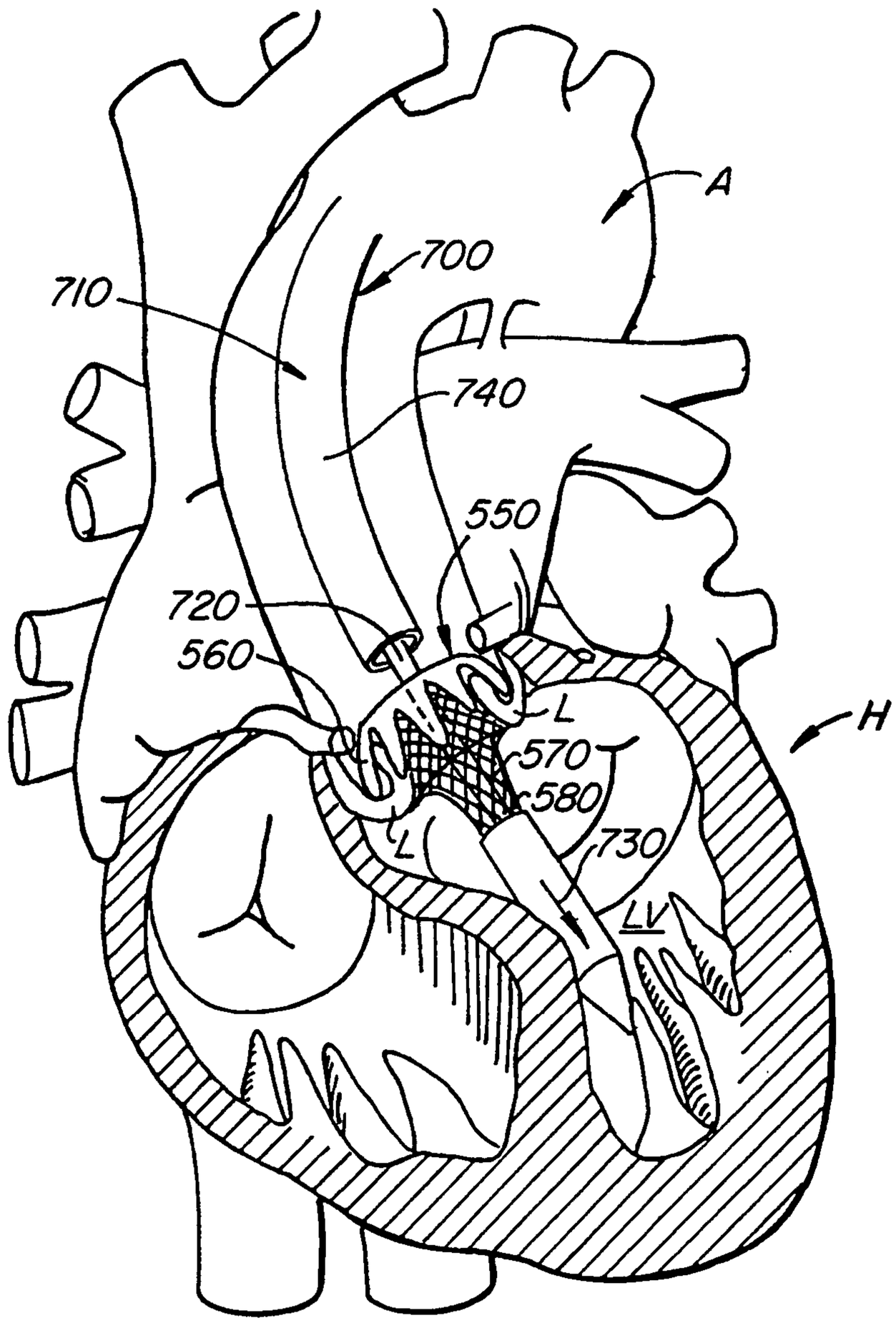

FIG. 45D

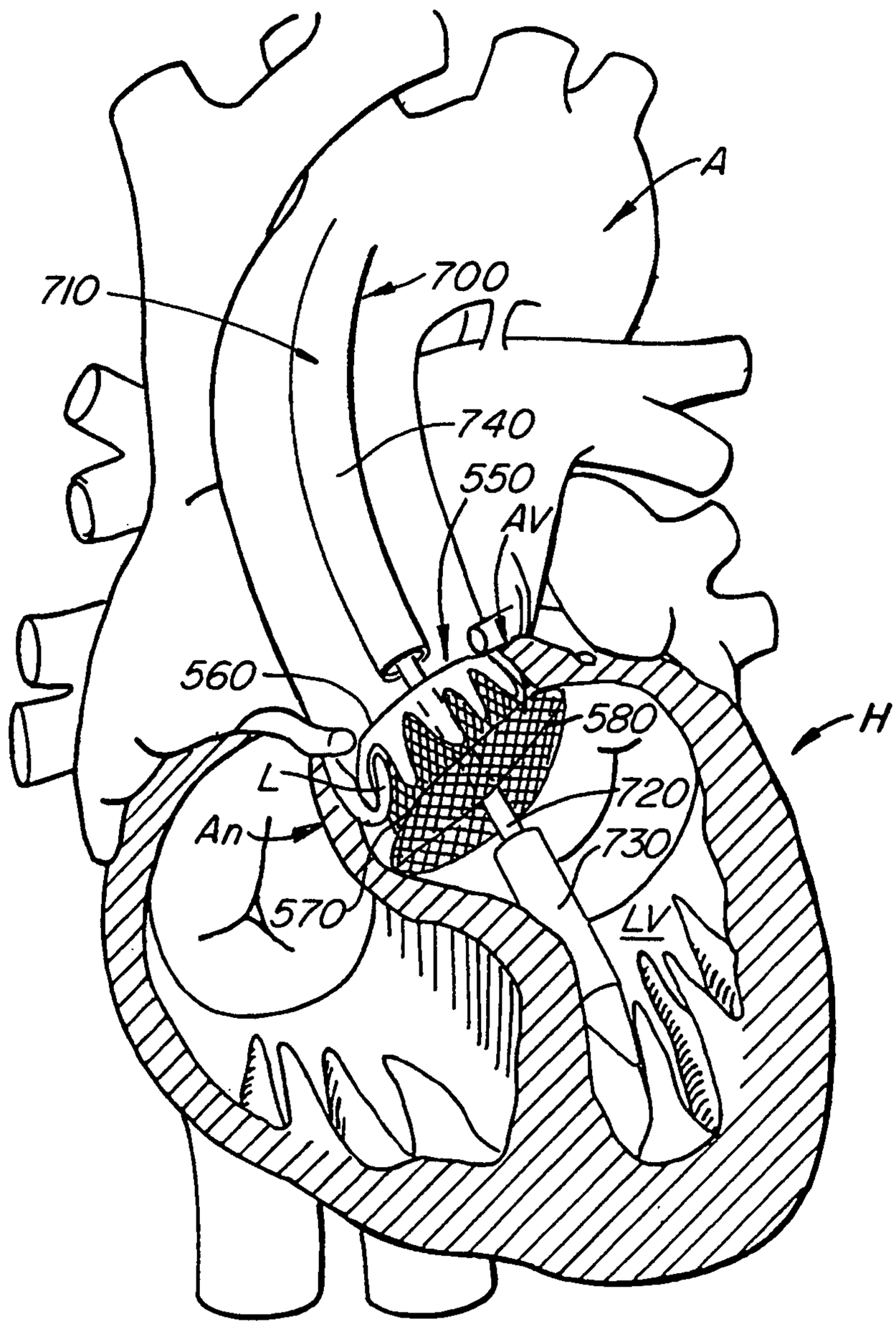

FIG. 45E

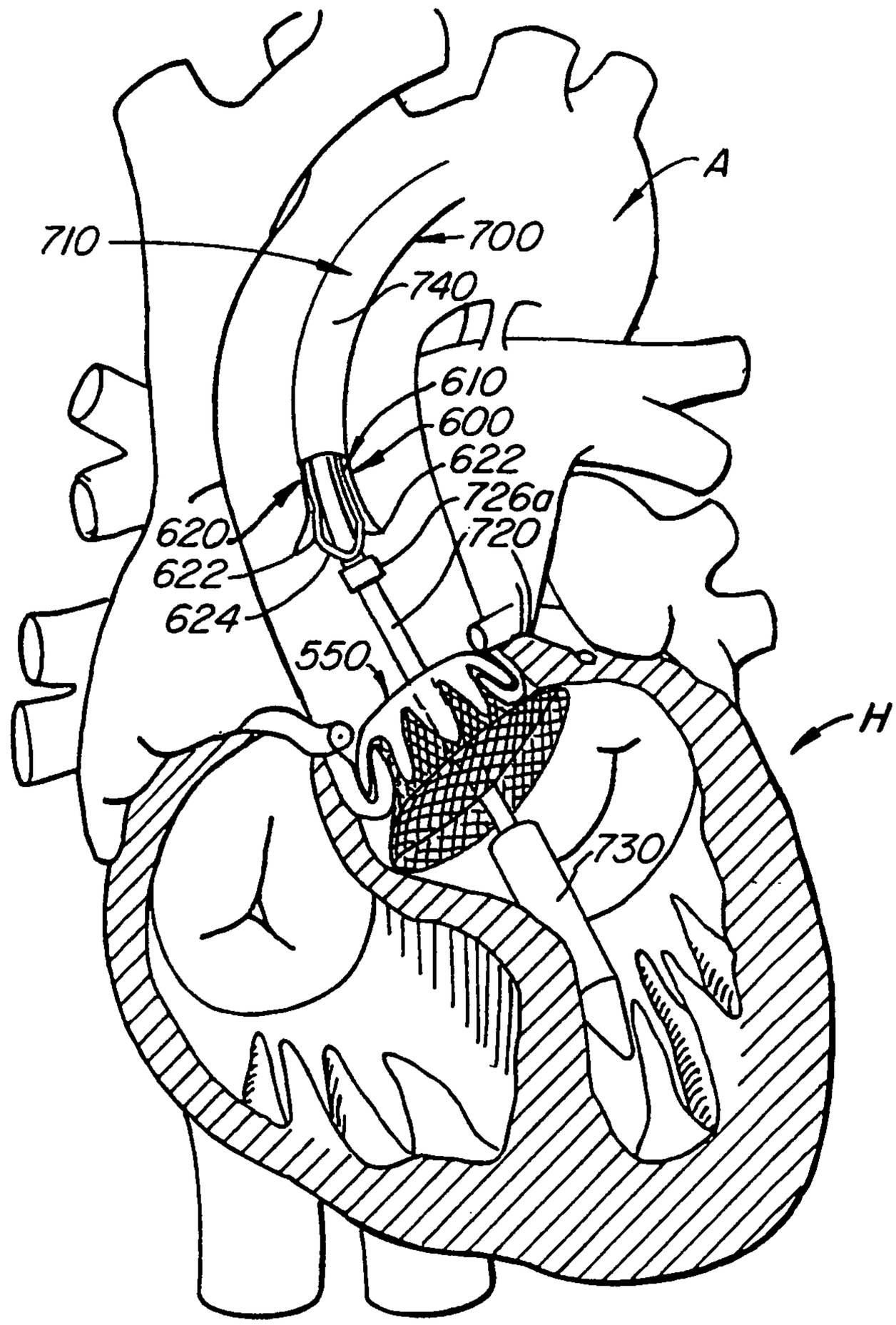

FIG. 45F

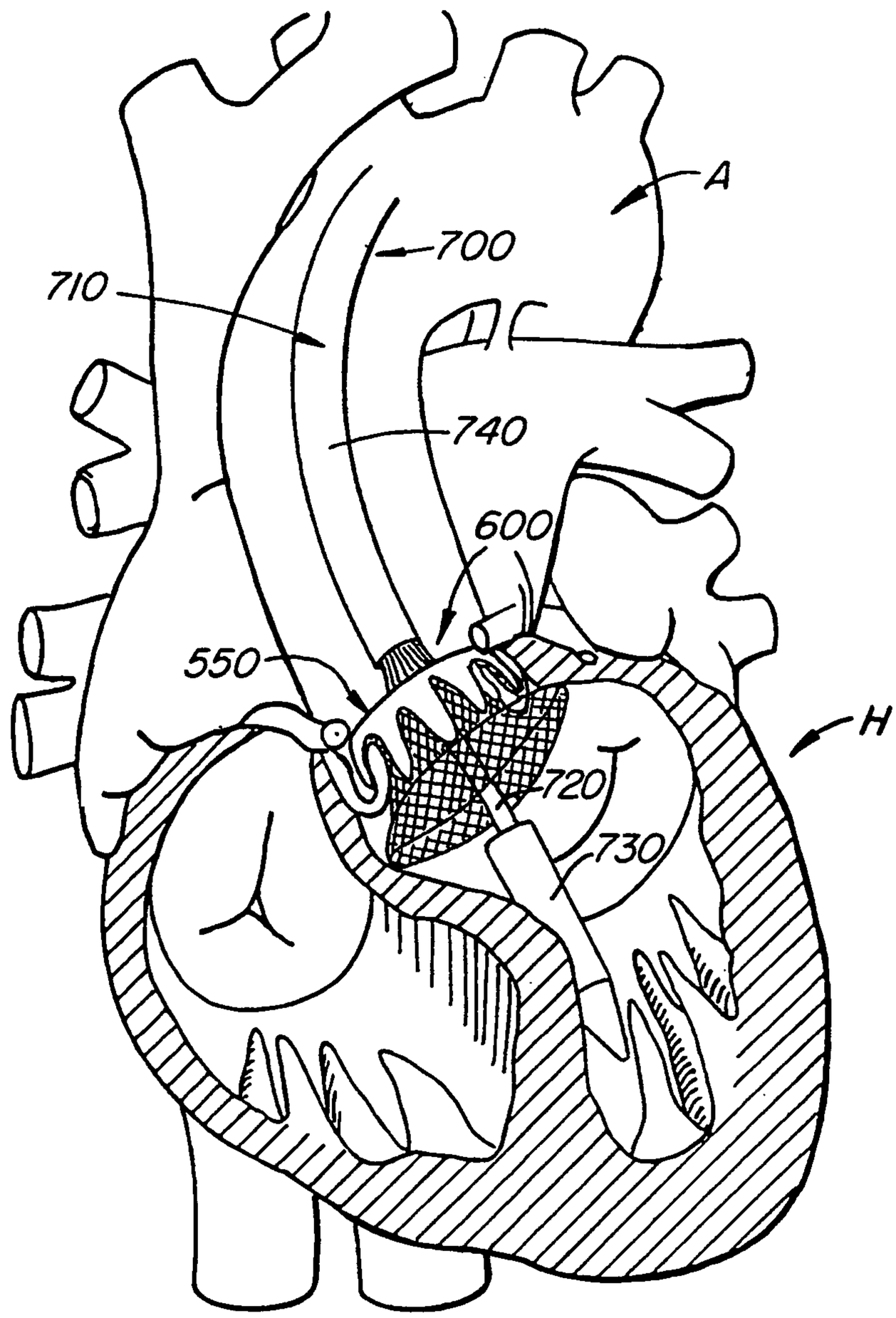

FIG. 45G

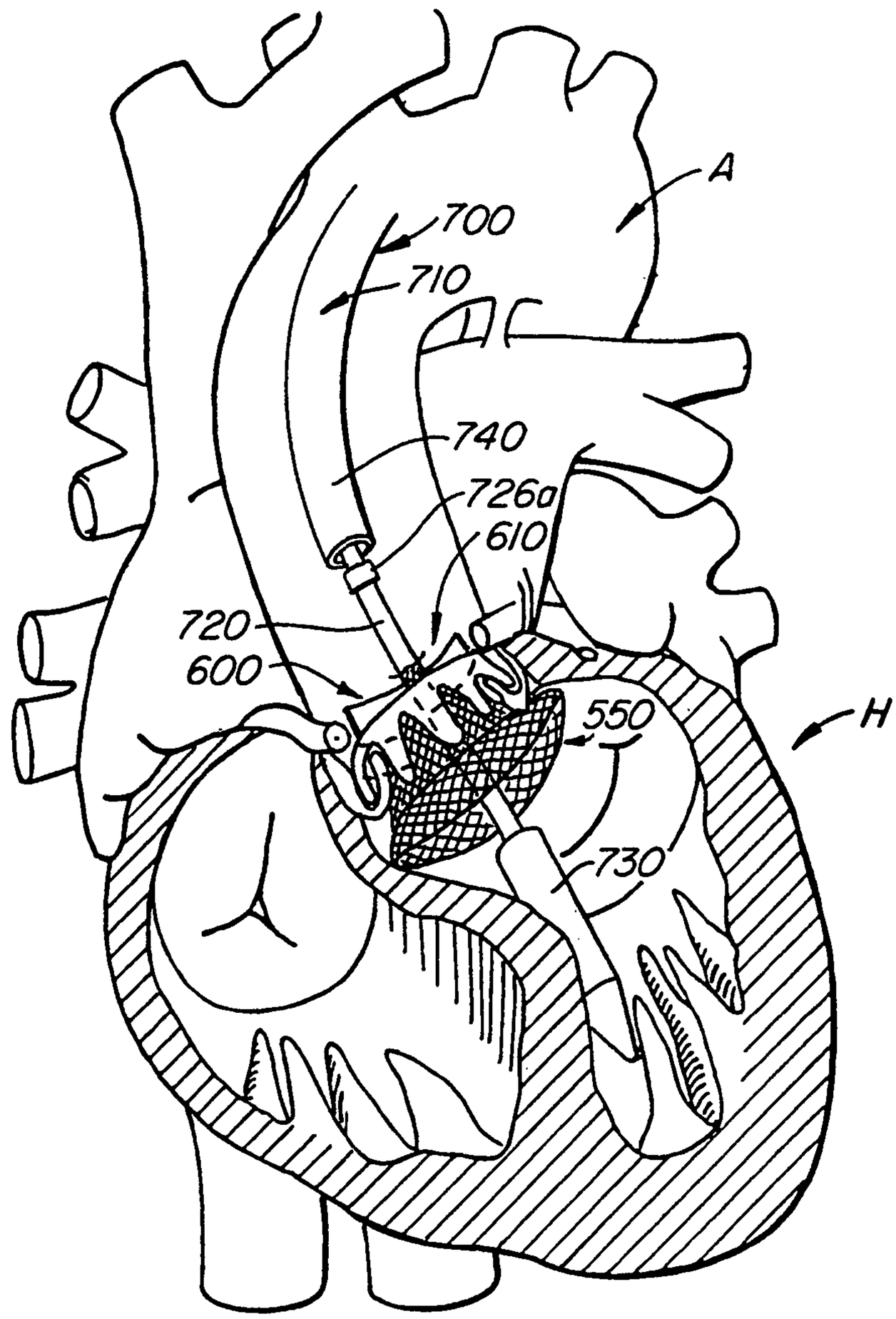

FIG. 45H

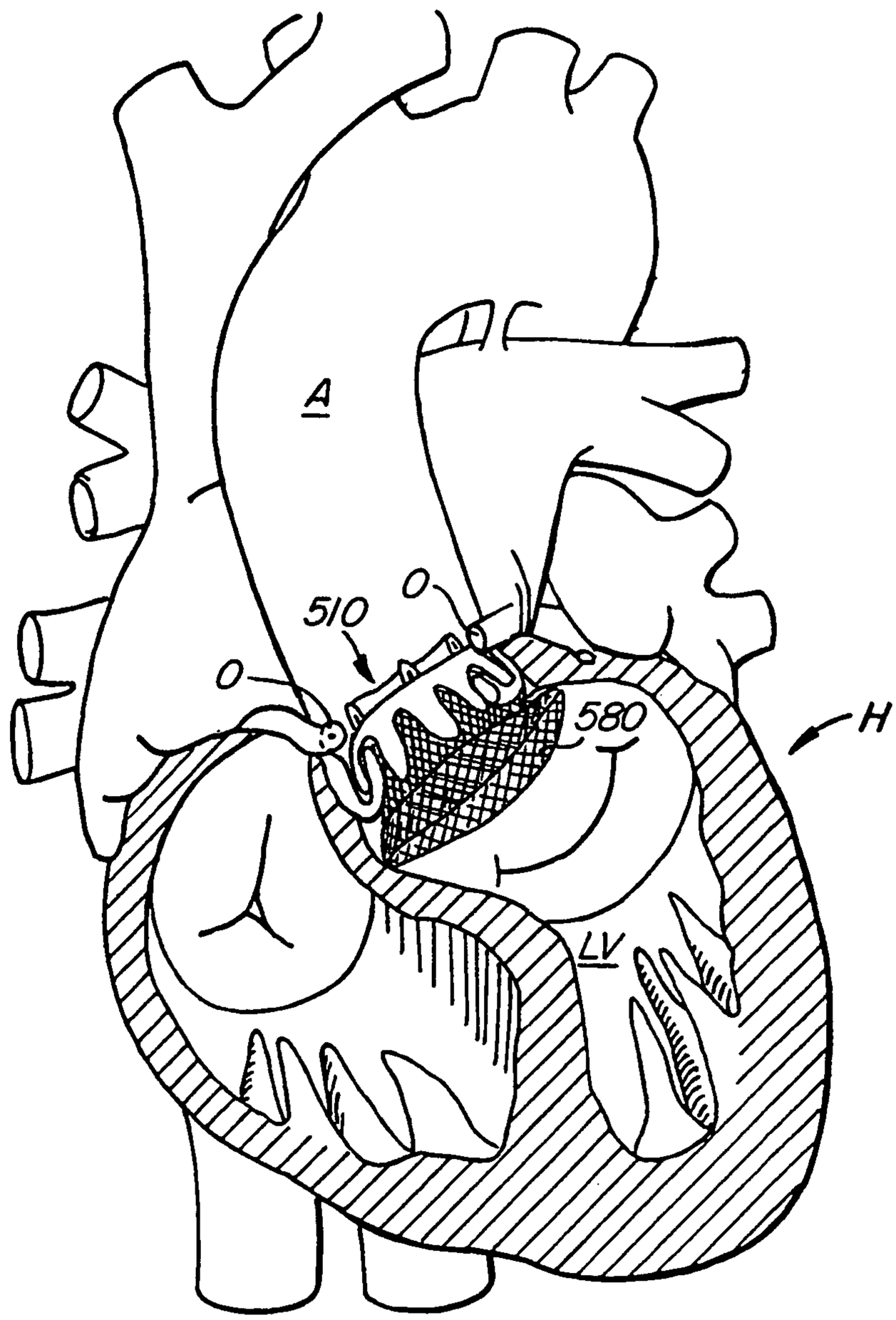

FIG. 45I

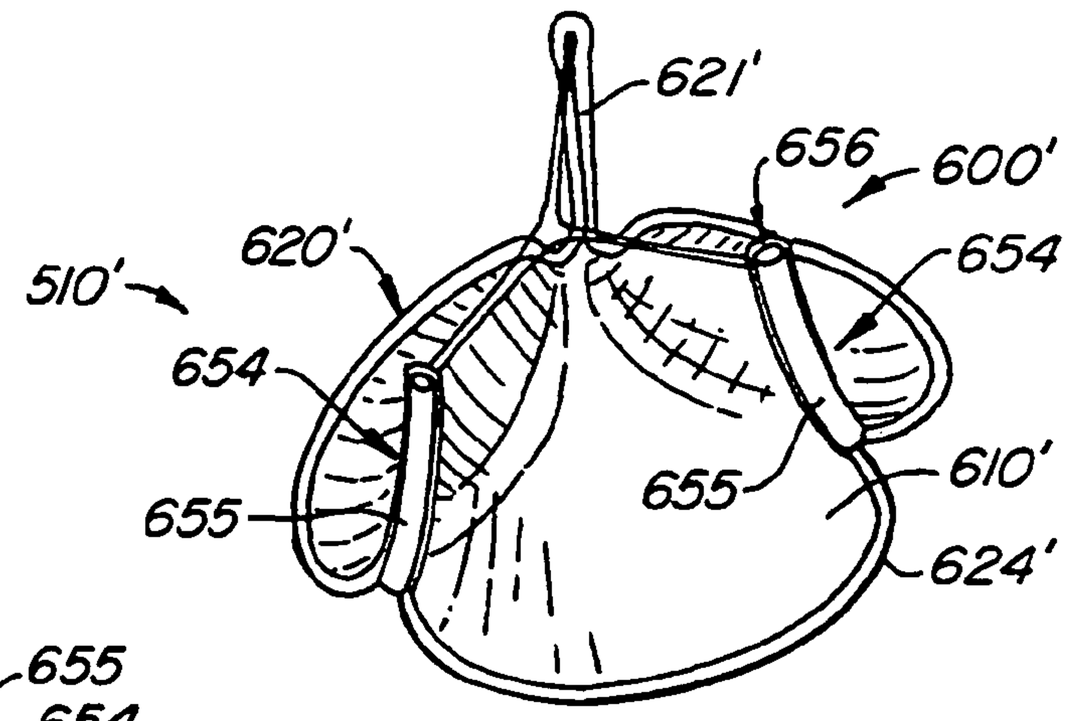

FIG. 46A

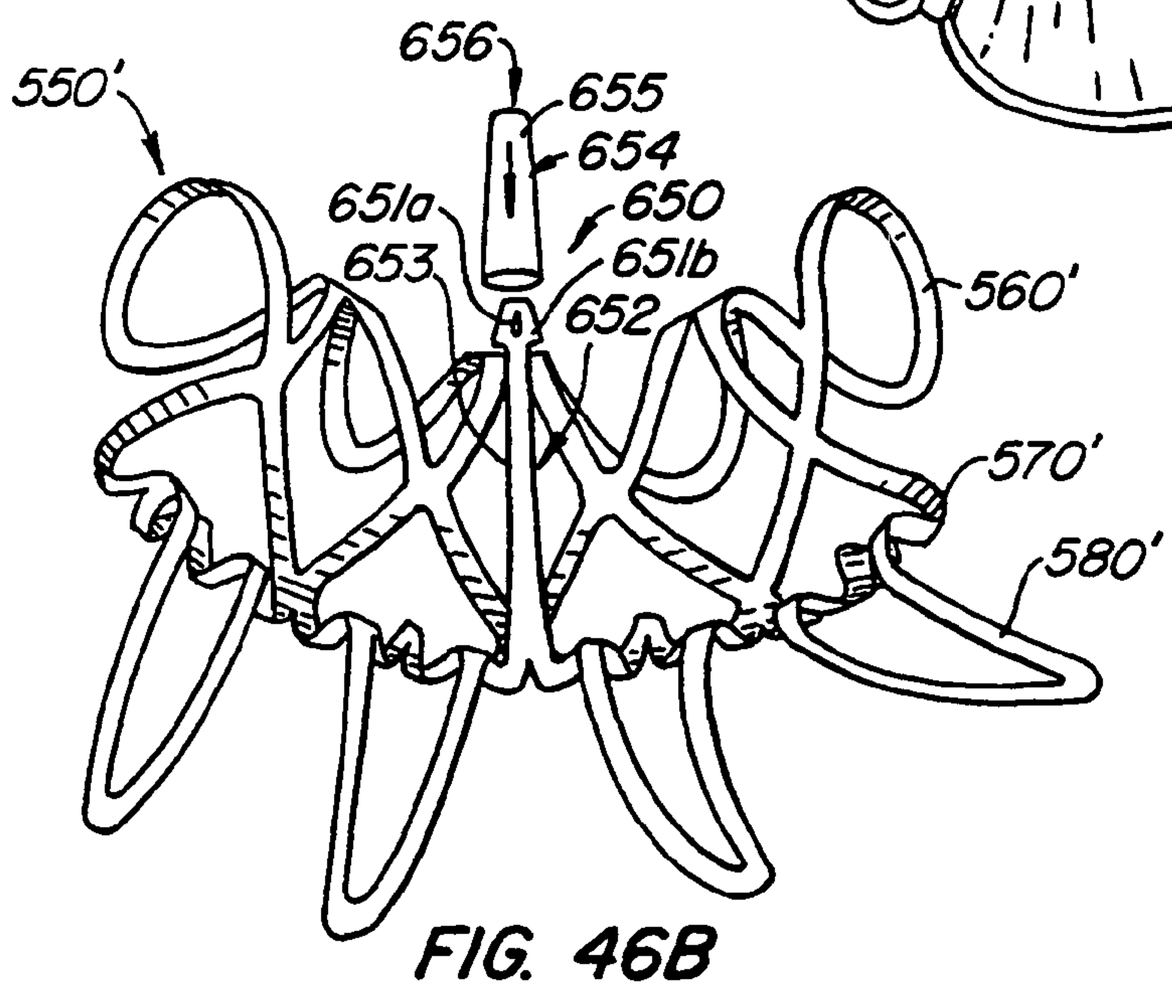

FIG. 46B

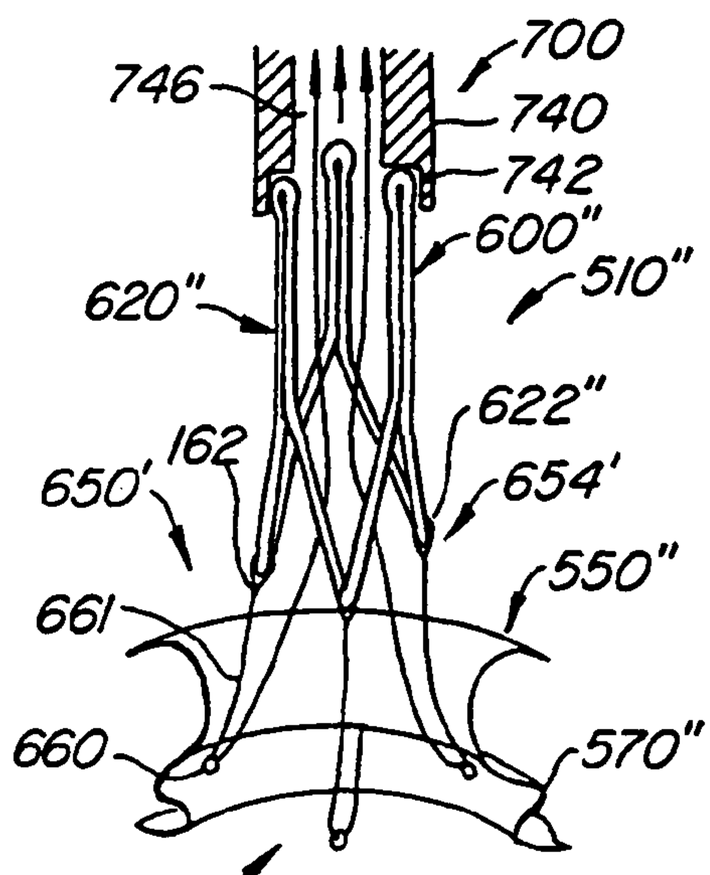

FIG. 47

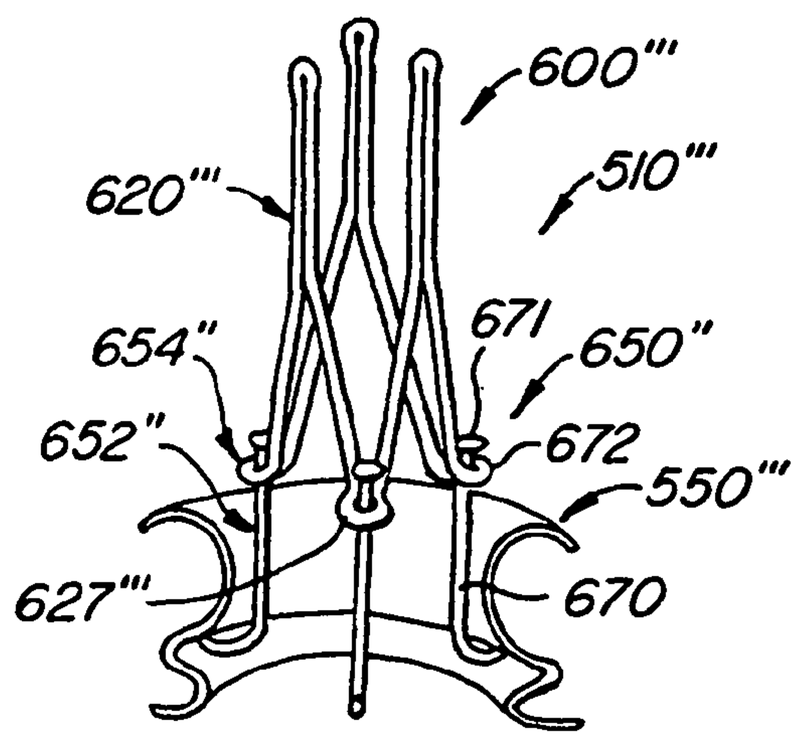

FIG. 48

REPOSITIONABLE HEART VALVE METHOD

BACKGROUND OF THE INVENTION

The present invention relates to methods and apparatus for endovascularly replacing a heart valve. More particularly, the present invention relates to methods and apparatus for percutaneously replacing a heart valve with a replacement valve using an expandable and retrievable anchor.

Heart valve surgery is used to repair or replace diseased heart valves. Valve surgery is an open-heart procedure conducted under general anesthesia. An incision is made through the patient's sternum (stemotomy), and the patient's heart is stopped while blood flow is rerouted through a heart-lung bypass machine.

Valve replacement may be indicated when there is a narrowing of the native heart valve, commonly referred to as stenosis, or when the native valve leaks or regurgitates. When replacing the valve, the native valve is excised and replaced with either a biologic or a mechanical valve. Mechanical valves require lifelong anticoagulant medication to prevent blood clot formation, and clicking of the valve often may be heard through the chest. Biologic tissue valves typically do not require such medication. Tissue valves may be obtained from cadavers or may be porcine or bovine, and are commonly attached to synthetic rings that are secured to the patient's heart.

Valve replacement surgery is a highly invasive operation with significant concomitant risk. Risks include bleeding, infection, stroke, heart attack, arrhythmia, renal failure, adverse reactions to the anesthesia medications, as well as sudden death. 2-5% of patients die during surgery.

Post-surgery, patients temporarily may be confused due to emboli and other factors associated with the heart-lung machine. The first 2-3 days following surgery are spent in an intensive care unit where heart functions can be closely monitored. The average hospital stay is between 1 to 2 weeks, with several more weeks to months required for complete recovery.

In recent years, advancements in minimally invasive surgery and interventional cardiology have encouraged some investigators to pursue percutaneous replacement of the aortic heart valve. Percutaneous Valve Technologies ("PVT") of Fort Lee, N.J., has developed a balloon-expandable stent integrated with a bioprosthetic valve. The stent/valve device is deployed across the native diseased valve to permanently hold the valve open, thereby alleviating a need to excise the native valve and to position the bioprosthetic valve in place of the native valve. PVT's device is designed for delivery in a cardiac catheterization laboratory under local anesthesia using fluoroscopic guidance, thereby avoiding general anesthesia and open-heart surgery. The device was first implanted in a patient in April of 2002.

PVT's device suffers from several drawbacks. Deployment of PVT's stent is not reversible, and the stent is not retrievable. This is a critical drawback because improper positioning too far up towards the aorta risks blocking the coronary ostia of the patient. Furthermore, a misplaced stent/valve in the other direction (away from the aorta, closer to the ventricle) will impinge on the mitral apparatus and eventually wear through the leaflet as the leaflet continuously rubs against the edge of the stent/valve.

Another drawback of the PVT device is its relatively large cross-sectional delivery profile. The PVT system's stent/valve combination is mounted onto a delivery balloon, making retrograde delivery through the aorta challenging. An antegrade transseptal approach may therefore be needed, requiring puncture of the septum and routing through the mitral valve, which significantly increases complexity and risk of the procedure. Very few cardiologists are currently trained in performing a transseptal puncture, which is a challenging procedure by itself.

Other prior art replacement heart valves use self-expanding stents as anchors. In the endovascular aortic valve replacement procedure, accurate placement of aortic valves relative to coronary ostia and the mitral valve is critical. Standard self-expanding systems have very poor accuracy in deployment, however. Often the proximal end of the stent is not released from the delivery system until accurate placement is verified by fluoroscopy, and the stent typically jumps once released. It is therefore often impossible to know where the ends of the stent will be with respect to the native valve, the coronary ostia and the mitral valve.

Also, visualization of the way the new valve is functioning prior to final deployment is very desirable. Visualization prior to final and irreversible deployment cannot be done with standard self-expanding systems, however, and the replacement valve is often not fully functional before final deployment.

Another drawback of prior art self-expanding replacement heart valve systems is their lack of radial strength. In order for self-expanding systems to be easily delivered through a delivery sheath, the metal needs to flex and bend inside the delivery catheter without being plastically deformed. In arterial stents, this is not a challenge, and there are many commercial arterial stent systems that apply adequate radial force against the vessel wall and yet can collapse to a small enough of a diameter to fit inside a delivery catheter without plastically deforming. However when the stent has a valve fastened inside it, as is the case in aortic valve replacement, the anchoring of the stent to vessel walls is significantly challenged during diastole. The force to hold back arterial pressure and prevent blood from going back inside the ventricle during diastole will be directly transferred to the stent/vessel wall interface. Therefore the amount of radial force required to keep the self expanding stent/valve in contact with the vessel wall and not sliding will be much higher than in stents that do not have valves inside of them. Moreover, a self-expanding stent without sufficient radial force will end up dilating and contracting with each heartbeat, thereby distorting the valve, affecting its function and possibly migrating and dislodging completely. Simply increasing strut thickness of the self-expanding stent is not a practical solution as it runs the risk of larger profile and/or plastic deformation of the self-expanding stent.

U.S. patent application Ser. No. 2002/0151970 to Garrison et al. describes a two-piece device for replacement of the aortic valve that is adapted for delivery through a patient's aorta. A stent is percutaneously placed across the native valve, then a replacement valve is positioned within the lumen of the stent. By separating the stent and the valve during delivery, a profile of the device's delivery system may be sufficiently reduced to allow aortic delivery without requiring a transseptal approach. Both the stent and a frame of the replacement valve may be balloon-expandable or self-expanding.

While providing for an aortic approach, devices described in the Garrison patent application suffer from several drawbacks. First, the stent portion of the device is delivered across the native valve as a single piece in a single step, which precludes dynamic repositioning of the stent during delivery. Stent foreshortening or migration during expansion may lead to improper alignment.

Additionally, Garrison's stent simply crushes the native valve leaflets against the heart wall and does not engage the

leaflets in a manner that would provide positive registration of the device relative to the native position of the valve. This increases an immediate risk of blocking the coronary ostia, as well as a longer-term risk of migration of the device post-implantation. Furtherstill, the stent comprises openings or gaps in which the replacement valve is seated post-delivery. Tissue may protrude through these gaps, thereby increasing a risk of improper seating of the valve within the stent.

In view of drawbacks associated with previously known techniques for percutaneously replacing a heart valve, it would be desirable to provide methods and apparatus that overcome those drawbacks.

SUMMARY OF THE INVENTION

One aspect of the invention provides a method for endovascularly replacing a heart valve of a patient. In some embodiments the method includes the steps of endovascularly delivering a replacement valve and an expandable anchor to a vicinity of the heart valve in an unexpanded configuration; expanding the anchor to a deployed configuration in which the anchor contacts tissue at an anchor site; repositioning the anchor in the anchor site; and deploying the anchor at the anchor site. The repositioning step may include the step of contracting the anchor and re-expanding the anchor at the anchor site for finer repositioning. The contracting step may include the step of applying an external non-hydraulic or non-pneumatic actuation force on the anchor.

In another aspect of the invention provides a method for endovascularly replacing a heart valve of a patient. In some embodiments the method includes the steps of endovascularly or percutaneously delivering a replacement valve and an expandable anchor to a vicinity of the heart valve in an unexpanded configuration; expanding the anchor to a deployed configuration in which the anchor contacts tissue at a first anchor site; repositioning the anchor to a second anchor site; and deploying the anchor at the second anchor site. The repositioning step may include the step of contracting the anchor and reexpanding the anchor at the second anchor site. The contracting step may includes the step of applying an external non-hydraulic or non-pneumatic actuation force on the anchor.

In some embodiments the deploying step includes the step of releasing the anchor from a deployment tool. The delivering step may include the step of delivering the replacement heart valve coupled to the anchor or, alternatively, separate from the anchor, in which case the method further includes the step of attaching the replacement valve to the anchor.

In instances in which the heart valve is an aortic valve, the delivering step may include the step of endovascularly or percutaneously delivering the expandable anchor and replacement valve to the vicinity of the aortic valve along a retrograde approach.

In some embodiments the deploying step may include the step of expanding a balloon within the anchor, and in some embodiments the deploying step may include the step of locking the anchor in an expanded configuration. Proximal and distal regions of the anchor may be expanded separately.

The invention may also include the step of registering the anchor with the first or second anchor site, such as by contacting tissue of the heart valve to resist movement of the anchor in at least a proximal or a distal direction prior to deploying the anchor.

Another aspect of the invention provides a method for percutaneously replacing a heart valve of a patient. The method includes the steps of percutaneously delivering a replacement valve and an expandable anchor to a vicinity of the heart valve in an unexpanded configuration; expanding the anchor to an expanded configuration in which the anchor contacts tissue at an anchor site, such as first a force of at least one pound; visually observing the anchor location; and releasing the anchor from a deployment tool. The replacement valve may be delivered coupled to the anchor or separate from the anchor, in which case the method also includes the step of attaching the valve to the anchor.

In some embodiments the method further includes the step of repositioning the anchor to a second anchor site after the observing step and before the releasing step. In some embodiments the expanding step includes the step of applying an external non-hydraulic or non-pneumatic actuation force on the anchor, and in some embodiments the method further includes the step of expanding a balloon within the anchor after the observing step. The method may include the step of registering the anchor with the anchor site.

INCORPORATION BY REFERENCE

All publications and patent applications mentioned in this specification are herein incorporated by reference to the same extent as if each individual publication or patent application was specifically and individually indicated to be incorporated by reference.

BRIEF DESCRIPTION OF THE DRAWINGS

The novel features of the invention are set forth with particularity in the appended claims. A better understanding of the features and advantages of the present invention will be obtained by reference to the following detailed description that sets forth illustrative embodiments, in which the principles of the invention are utilized, and the accompanying drawings of which:

FIGS. **1**A-B are elevational views of a replacement heart valve and anchor according to one embodiment of the invention.

FIGS. **2**A-B are sectional views of the anchor and valve of FIG. **1**.

FIGS. **3**A-B show delivery and deployment of a replacement heart valve and anchor, such as the anchor and valve of FIGS. **1** and **2**.

FIGS. **4**A-F also shows delivery and deployment of a replacement heart valve and anchor, such as the anchor and valve of FIGS. **1** and **2**.

FIGS. **5**A-F show the use of a replacement heart valve and anchor to replace an aortic valve.

FIGS. **6**A-F show the use of a replacement heart valve and anchor with a positive registration feature to replace an aortic valve.

FIG. **7** shows use of a replacement heart valve and anchor with an alternative positive registration feature to replace an aortic valve.

FIGS. **8**A-C show another embodiment of a replacement heart valve and anchor according to the invention.

FIGS. **9**A-H show delivery and deployment of the replacement heart valve and anchor of FIG. **8**.

FIG. **10** is a cross-sectional drawing of the delivery system used with the method and apparatus of FIGS. **8** and **9**.

FIGS. **11**A-C show alternative locks for use with replacement heart valves and anchors of this invention.

FIGS. **12**A-C show a vessel wall engaging lock for use with replacement heart valves and anchors of this invention.

FIG. **13** demonstrates paravalvular leaking around a replacement heart valve and anchor.

FIG. **14** shows a seal for use with a replacement heart valve and anchor of this invention.

FIGS. **15**A-E show alternative arrangements of seals on a replacement heart valve and anchor.

FIGS. **16**A-C show alternative seal designs for use with replacement heart valves and anchors.

FIGS. **17**A-B show an alternative anchor lock embodiment in an unlocked configuration.

FIGS. **18**A-B shows the anchor lock of FIGS. **17**A-B in a locked configuration.

FIG. **19** shows an alternative anchor deployment tool attachment and release mechanism for use with the invention.

FIG. **20** shows the attachment and release mechanism of FIG. **19** in the process of being released.

FIG. **21** shows the attachment and release mechanism of FIGS. **19** and **20** in a released condition.

FIG. **22** shows an alternative embodiment of a replacement heart valve and anchor and a deployment tool according to the invention in an undeployed configuration.

FIG. **23** shows the replacement heart valve and anchor of FIG. **22** in a partially deployed configuration.

FIG. **24** shows the replacement heart valve and anchor of FIGS. **22** and **23** in a more fully deployed configuration but with the deployment tool still attached.

FIG. **25** shows yet another embodiment of the delivery and deployment apparatus of the invention in use with a replacement heart valve and anchor.

FIG. **26** shows the delivery and deployment apparatus of FIG. **25** in the process of deploying a replacement heart valve and anchor.

FIG. **27** show an embodiment of the invention employing seals at the interface of the replacement heart valve and anchor and the patient's tissue.

FIG. **28** is a longitudinal cross-sectional view of the seal shown in FIG. **27** in compressed form.

FIG. **29** is a transverse cross-sectional view of the seal shown in FIG. **28**.

FIG. **30** is a longitudinal cross-sectional view of the seal shown in FIG. **27** in expanded form.

FIG. **31** is a transverse cross-sectional view of the seal shown in FIG. **30**.

FIG. **32** shows yet another embodiment of the replacement heart valve and anchor of this invention in an undeployed configuration.

FIG. **33** shows the replacement heart valve and anchor of FIG. **32** in a deployed configuration.

FIG. **34** shows the replacement heart valve and anchor of FIGS. **32** and **33** deployed in a patient's heart valve.

FIGS. **35**A-H show yet another embodiment of a replacement heart valve, anchor and deployment system according to this invention.

FIGS. **36**A-E show more detail of the anchor of the embodiment shown in FIGS. **35**A-H.

FIGS. **37**A-B show other embodiments of the replacement heart valve and anchor of the invention.

FIGS. **38**A-C illustrate a method for percutaneously replacing a patient's diseased heart valve.

FIGS. **39**A-B show an anchor for use in a two-piece replacement heart valve and anchor embodiment of the invention.

FIGS. **40**A-B show a replacement heart valve for use in a two-piece replacement heart valve and anchor embodiment of the invention.

FIGS. **41**A-D show a method of coupling the anchor of FIG. **39** and the replacement heart valve of FIG. **40**.

FIG. **42** shows a delivery system for use with the apparatus shown in FIGS. **39-41**.

FIG. **43** shows an alternative embodiment of a delivery system for use with the apparatus shown in FIGS. **39-41**.

FIG. **44** shows yet another alternative embodiment of a delivery system for use with the apparatus shown in FIGS. **39-41**.

FIGS. **45**A-I illustrate a method of delivering and deploying a two-piece replacement heart valve and anchor.

FIGS. **46**A-B shows another embodiment of a two-piece replacement heart valve and anchor according to this invention.

FIG. **47** shows yet another embodiment of a two-piece replacement heart valve and anchor according to this invention.

FIG. **48** shows yet another embodiment of a two-piece replacement heart valve and anchor according to this invention.

DETAILED DESCRIPTION OF THE INVENTION

While preferred embodiments of the present invention have been shown and described herein, it will be obvious to those skilled in the art that such embodiments are provided by way of example only. Numerous variations, changes, and substitutions will now occur to those skilled in the art without departing from the invention. It should be understood that various alternatives to the embodiments of the invention described herein may be employed in practicing the invention. It is intended that the following claims define the scope of the invention and that methods and structures within the scope of these claims and their equivalents be covered thereby.

With reference now to FIGS. **1-4**, a first embodiment of replacement heart valve apparatus in accordance with the present invention is described, including a method of actively foreshortening and expanding the apparatus from a delivery configuration and to a deployed configuration. Apparatus **10** comprises replacement valve **20** disposed within and coupled to anchor **30**. FIG. **1** schematically illustrate individual cells of anchor **30** of apparatus **10**, and should be viewed as if the cylindrical anchor has been cut open and laid flat. FIG. **2** schematically illustrate a detail portion of apparatus **10** in side-section.

Anchor **30** has a lip region **32**, a skirt region **34** and a body region **36**. First, second and third posts **38***a*, **38***b* and **38***c*, respectively, are coupled to skirt region **34** and extend within lumen **31** of anchor **30**. Posts **38** preferably are spaced 120° apart from one another about the circumference of anchor **30**.

Anchor **30** preferably is fabricated by using self-expanding patterns (laser cut or chemically milled), braids and materials, such as a stainless steel, nickel-titanium ("Nitinol") or cobalt chromium but alternatively may be fabricated using balloon-expandable patterns where the anchor is designed to plastically deform to it's final shape by means of balloon expansion. Replacement valve **20** is preferably from biologic tissues, e.g. porcine valve leaflets or bovine or equine pericardium tissues, alternatively it can be made from tissue engineered materials (such as extracellular matrix material from Small Intestinal Submucosa (SIS)) but alternatively may be prosthetic from an elastomeric polymer or silicone, Nitinol or stainless steel mesh or pattern (sputtered, chemically milled or laser cut). The leaflet may also be made of a composite of the elastomeric or silicone materials and metal alloys or other fibers such Kevlar or carbon. Annular base **22** of replacement valve **20** preferably is coupled to skirt region **34** of anchor **30**, while commissures **24** of replacement valve leaflets **26** are coupled to posts **38**.

Anchor **30** may be actuated using external non-hydraulic or non-pneumatic force to actively foreshorten in order to increase its radial strength. As shown below, the proximal and distal end regions of anchor **30** may be actuated independently. The anchor and valve may be placed and expanded in order to visualize their location with respect to the native valve and other anatomical features and to visualize operation of the valve. The anchor and valve may thereafter be repositioned and even retrieved into the delivery sheath or catheter. The apparatus may be delivered to the vicinity of the patient's aortic valve in a retrograde approach in a catheter having a diameter no more than 23 french, preferably no more than 21 french, more preferably no more than 19 french, or more preferably no more than 17 french. Upon deployment the anchor and replacement valve capture the native valve leaflets and positively lock to maintain configuration and position.

A deployment tool is used to actuate, reposition, lock and/or retrieve anchor **30**. In order to avoid delivery of anchor **30** on a balloon for balloon expansion, a non-hydraulic or non-pneumatic anchor actuator is used. In this embodiment, the actuator is a deployment tool that includes distal region control wires **50**, control rods or tubes **60** and proximal region control wires **62**. Locks **40** include posts or arms **38** preferably with male interlocking elements **44** extending from skirt region **34** and mating female interlocking elements **42** in lip region **32**. Male interlocking elements **44** have eyelets **45**. Control wires **50** pass from a delivery system for apparatus **10** through female interlocking elements **42**, through eyelets **45** of male interlocking elements **44**, and back through female interlocking elements **42**, such that a double strand of wire **50** passes through each female interlocking element **42** for manipulation by a medical practitioner external to the patient to actuate and control the anchor by changing the anchor's shape. Control wires **50** may comprise, for example, strands of suture.

Tubes **60** are reversibly coupled to apparatus **10** and may be used in conjunction with wires **50** to actuate anchor **30**, e.g., to foreshorten and lock apparatus **10** in the fully deployed configuration. Tubes **60** also facilitate repositioning and retrieval of apparatus **10**, as described hereinafter. For example, anchor **30** may be foreshortened and radially expanded by applying a distally directed force on tubes **60** while proximally retracting wires **50**. As seen in FIG. **3**, control wires **62** pass through interior lumens **61** of tubes **60**. This ensures that tubes **60** are aligned properly with apparatus **10** during deployment and foreshortening. Control wires **62** can also actuate anchor **60**; proximally directed forces on control wires **62** contacts the proximal lip region **32** of anchor **30**. Wires **62** also act to couple and decouple tubes **60** from apparatus **10**. Wires **62** may comprise, for example, strands of suture.

FIGS. **1**A and **2**A illustrate anchor **30** in a delivery configuration or in a partially deployed configuration (e.g., after dynamic self-expansion expansion from a constrained delivery configuration within a delivery sheath). Anchor **30** has a relatively long length and a relatively small width in the delivery or partially deployed configuration, as compared to the foreshortened and fully deployed configuration of FIGS. **1**B and **2**B.

In FIGS. **1**A and **2**A, replacement valve **20** is collapsed within lumen **31** of anchor **30**. Retraction of wires **50** relative to tubes **60** foreshortens anchor **30**, which increases the anchor's width while decreasing its length. Such foreshortening also properly seats replacement valve **20** within lumen **31** of anchor **30**. Imposed foreshortening will enhance radial force applied by apparatus **10** to surrounding tissue over at least a portion of anchor **30**. In some embodiments, the anchor exerts an outward force on surrounding tissue to engage the tissue in such way to prevent migration of anchor caused by force of blood against closed leaflet during diastole. This anchoring force is preferably 1 to 2 lbs., more preferably 2 to 4 lbs., or more preferably 4 to 10 lbs. In some embodiments, the anchoring force is preferably greater than 1 pound, more preferably greater than 2 pounds, or more preferably greater than 4 pounds. Enhanced radial force of the anchor is also important for enhanced crush resistance of the anchor against the surrounding tissue due to the healing response (fibrosis and contraction of annulus over a longer period of time) or to dynamic changes of pressure and flow at each heart beat In an alternative embodiment, the anchor pattern or braid is designed to have gaps or areas where the native tissue is allowed to protrude through the anchor slightly (not shown) and as the foreshortening is applied, the tissue is trapped in the anchor. This feature would provide additional means to prevent anchor migration and enhance long term stability of the device.

Deployment of apparatus **10** is fully reversible until lock **40** has been locked via mating of male interlocking elements **44** with female interlocking elements **42**. Deployment is then completed by decoupling tubes **60** from lip section **32** of anchor **30** by retracting one end of each wire **62** relative to the other end of the wire, and by retracting one end of each wire **50** relative to the other end of the wire until each wire has been removed from eyelet **45** of its corresponding male interlocking element **44**.

As best seen in FIG. **2**B, body region **36** of anchor **30** optionally may comprise barb elements **37** that protrude from anchor **30** in the fully deployed configuration, for example, for engagement of a patient's native valve leaflets and to preclude migration of the apparatus.

With reference now to FIG. **3**, a delivery and deployment system for a self-expanding embodiment of apparatus **10** including a sheath **110** having a lumen **112**. Self-expanding anchor **30** is collapsible to a delivery configuration within lumen **112** of sheath **110**, such that apparatus **10** may be delivered via delivery system **100**. As seen in FIG. **3**A, apparatus **10** may be deployed from lumen **112** by retracting sheath **110** relative to apparatus **10**, control wires **50** and tubes **60**, which causes anchor **30** to dynamically self-expand to a partially deployed configuration. Control wires **50** then are retracted relative to apparatus **10** and tubes **60** to impose foreshortening upon anchor **30**, as seen in FIG. **3**B.

During foreshortening, tubes **60** push against lip region **32** of anchor **30**, while wires **50** pull on posts **38** of the anchor. Wires **62** may be retracted along with wires **50** to enhance the distally-directed pushing force applied by tubes **60** to lip region **32**. Continued retraction of wires **50** relative to tubes **60** would lock locks **40** and fully deploy apparatus **10** with replacement valve **20** properly seated within anchor **30**, as in FIGS. **1**B and **2**B. Apparatus **10** comprises enhanced radial strength in the fully deployed configuration as compared to the partially deployed configuration of FIG. **3**A. Once apparatus **10** has been fully deployed, wires **50** and **62** may be removed from apparatus **10**, thereby separating delivery system **100** and tubes **60** from the apparatus.

Deployment of apparatus **10** is fully reversible until locks **40** have been actuated. For example, just prior to locking the position of the anchor and valve and the operation of the valve may be observed under fluoroscopy. If the position needs to be changed, by alternately relaxing and reapplying the proximally directed forces exerted by control wires **50** and/or control wires **62** and the distally directed forces exerted by tubes **60**, expansion and contraction of the lip and skirt regions of anchor **30** may be independently controlled so that

the anchor and valve can be moved to, e.g., avoid blocking the coronary ostia or impinging on the mitral valve. Apparatus **10** may also be completely retrieved within lumen **112** of sheath **110** by simultaneously proximally retracting wires **50** and tubes **60**/wires **62** relative to sheath **110**. Apparatus **10** then may be removed from the patient or repositioned for subsequent redeployment.

Referring now to FIG. **4**, step-by-step deployment of apparatus **10** via delivery system **100** is described. In FIG. **4**A, sheath **110** is retracted relative to apparatus **10**, wires **50** and tubes **60**, thereby causing self-expandable anchor **30** to dynamically self-expand apparatus **10** from the collapsed delivery configuration within lumen **112** of sheath **110** to the partially deployed configuration. Apparatus **10** may then be dynamically repositioned via tubes **60** to properly orient the apparatus, e.g. relative to a patient's native valve leaflets.

In FIG. **4**B, control wires **50** are retracted while tubes **60** are advanced, thereby urging lip region **32** of anchor **30** in a distal direction while urging posts **38** of the anchor in a proximal direction. This foreshortens apparatus **10**, as seen in FIG. **4**C. Deployment of apparatus **10** is fully reversible even after foreshortening has been initiated and has advanced to the point illustrated in FIG. **4**C.

In FIG. **4**D, continued foreshortening causes male interlocking elements **44** of locks **40** to engage female interlocking elements **42**. The male elements mate with the female elements, thereby locking apparatus **10** in the foreshortened configuration, as seen in FIG. **4**E. Wires **50** are then pulled through eyelets **45** of male elements **44** to remove the wires from apparatus **10**, and wires **62** are pulled through the proximal end of anchor **30** to uncouple tubes **60** from the apparatus, thereby separating delivery system **100** from apparatus **10**. Fully deployed apparatus **10** is shown in FIG. **4**F.

Referring to FIG. **5**, a method of percutaneously replacing a patient's diseased aortic valve with apparatus **10** and delivery system **100** is described. As seen in FIG. **5**A, sheath **110** of delivery system **100**, having apparatus **10** disposed therein, is percutaneously advanced over guide wire G, preferably in a retrograde fashion (although an antegrade or hybrid approach alternatively may be used), through a patient's aorta A to the patient's diseased aortic valve AV. A nosecone **102** precedes sheath **110** in a known manner. In FIG. **5**B, sheath **110** is positioned such that its distal region is disposed within left ventricle LV of the patient's heart H.

Apparatus **10** is deployed from lumen **112** of sheath **110**, for example, under fluoroscopic guidance, such that anchor **30** of apparatus **10** dynamically self-expands to a partially deployed configuration, as in FIG. **5**C. Advantageously, apparatus **10** may be retracted within lumen **112** of sheath **110** via wires **50**—even after anchor **30** has dynamically expanded to the partially deployed configuration, for example, to abort the procedure or to reposition apparatus **10** or delivery system **100**. As yet another advantage, apparatus **10** may be dynamically repositioned, e.g. via sheath **110** and/or tubes **60**, in order to properly align the apparatus relative to anatomical landmarks, such as the patient's coronary ostia or the patient's native valve leaflets L. When properly aligned, skirt region **34** of anchor **30** preferably is disposed distal of the leaflets, while body region **36** is disposed across the leaflets and lip region **32** is disposed proximal of the leaflets.

Once properly aligned, wires **50** are retracted relative to tubes **60** to impose foreshortening upon anchor **30** and expand apparatus **10** to the fully deployed configuration, as in FIG. **5**D. Foreshortening increases the radial strength of anchor **30** to ensure prolonged patency of valve annulus An, as well as to provide a better seal for apparatus **10** that reduces paravalvular regurgitation. As seen in FIG. **5**E, locks **40** maintain imposed foreshortening. Replacement valve **20** is properly seated within anchor **30**, and normal blood flow between left ventricle LV and aorta A is thereafter regulated by apparatus **10**. Deployment of apparatus **10** advantageously is fully reversible until locks **40** have been actuated.

As seen in FIG. **5**F, wires **50** are pulled from eyelets **45** of male elements **44** of locks **40**, tubes **60** are decoupled from anchor **30**, e.g. via wires **62**, and delivery system **100** is removed from the patient, thereby completing deployment of apparatus **10**. Optional barb elements **37** engage the patient's native valve leaflets, e.g. to preclude migration of the apparatus and/or reduce paravalvular regurgitation.

With reference now to FIG. **6**, a method of percutaneously replacing a patient's diseased aortic valve with apparatus **10** is provided, wherein proper positioning of the apparatus is ensured via positive registration of a modified delivery system to the patient's native valve leaflets. In FIG. **6**A, modified delivery system **100'** delivers apparatus **10** to diseased aortic valve AV within sheath **110**. As seen in FIGS. **6**B and **6**C, apparatus **10** is deployed from lumen **112** of sheath **110**, for example, under fluoroscopic guidance, such that anchor **30** of apparatus **10** dynamically self-expands to a partially deployed configuration. As when deployed via delivery system **100**, deployment of apparatus **10** via delivery system **100'** is fully reversible until locks **40** have been actuated.

Delivery system **100'** comprises leaflet engagement element **120**, which preferably self-expands along with anchor **30**. Engagement element **120** is disposed between tubes **60** of delivery system **100'** and lip region **32** of anchor **30**. Element **120** releasably engages the anchor. As seen in FIG. **6**C, the element is initially deployed proximal of the patient's native valve leaflets L. Apparatus **10** and element **120** then may be advanced/dynamically repositioned until engagement element positively registers against the leaflets, thereby ensuring proper positioning of apparatus **10**. Also delivery system **100'** includes filter structure **61**A (e.g., filter membrane or braid) as part of push tubes **60** to act as an embolic protection element. Emboli can be generated during manipulation and placement of anchor from either diseased native leaflet or surrounding aortic tissue and can cause blockage. Arrows **61**B in FIG. **6**E show blood flow through filter structure **61**A where blood is allowed to flow but emboli is trapped in the delivery system and removed with it at the end of the procedure.

Alternatively, foreshortening may be imposed upon anchor **30** while element **120** is disposed proximal of the leaflets, as in FIG. **6**D. Upon positive registration of element **120** against leaflets L, element **120** precludes further distal migration of apparatus **10** during additional foreshortening, thereby reducing a risk of improperly positioning the apparatus. FIG. **6**E details engagement of element **120** against the native leaflets. As seen in FIG. **6**F, once apparatus **10** is fully deployed, element **120**, wires **50** and tubes **60** are decoupled from the apparatus, and delivery system **100'** is removed from the patient, thereby completing the procedure.

With reference to FIG. **7**, an alternative embodiment of the apparatus of FIG. **6** is described, wherein leaflet engagement element **120** is coupled to anchor **30** of apparatus **10'**, rather than to delivery system **100**. Engagement element **120** remains implanted in the patient post-deployment of apparatus **10'**. Leaflets L are sandwiched between lip region **32** of anchor **30** and element **120** in the fully deployed configuration. In this manner, element **120** positively registers apparatus **10'** relative to the leaflets and precludes distal migration of the apparatus over time.

Referring now to FIG. **8**, an alternative delivery system adapted for use with a balloon expandable embodiment of the present invention is described. In FIG. **8**A, apparatus **10"**

comprises anchor **30'** that may be fabricated from balloon-expandable materials. Delivery system **100"** comprises inflatable member **130** disposed in a deflated configuration within lumen **31** of anchor **30'**. In FIG. **8**B, optional outer sheath **110** is retracted, and inflatable member **130** is inflated to expand anchor **30'** to the fully deployed configuration. As inflatable member **130** is being deflated, as in earlier embodiments, wires **50** and **62** and tubes **60** may be used to assist deployment of anchor **30'** and actuation of locks **40**, as well as to provide reversibility and retrievability of apparatus **10"** prior to actuation of locks **40**. Next, wires **50** and **62** and tubes **60** are removed from apparatus **10"**, and delivery system **100"** is removed, as seen in FIG. **8**C.

As an alternative delivery method, anchor **30'** may be partially deployed via partial expansion of inflatable member **130**. The inflatable member would then be advanced within replacement valve **20** prior to inflation of inflatable member **130** and full deployment of apparatus **10"**. Inflation pressures used will range from about 3 to 6 atm, or more preferably from about 4 to 5 atm, though higher and lower atm pressures may also be used (e.g., greater than 3 atm, more preferably greater than 4 atm, more preferably greater than 5 atm, or more preferably greater than 6 atm). Advantageously, separation of inflatable member **130** from replacement valve **20**, until partial deployment of apparatus **10"** at a treatment site, is expected to reduce a delivery profile of the apparatus, as compared to previously known apparatus. This profile reduction may facilitate retrograde delivery and deployment of apparatus **10"**, even when anchor **30'** is balloon-expandable.

Although anchor **30'** has illustratively been described as fabricated from balloon-expandable materials, it should be understood that anchor **30'** alternatively may be fabricated from self-expanding materials whose expansion optionally may be balloon-assisted. In such a configuration, anchor **30'** would expand to a partially deployed configuration upon removal of outer sheath **110**. If required, inflatable member **130** then would be advanced within replacement valve **20** prior to inflation. Inflatable member **130** would assist full deployment of apparatus **10"**, for example, when the radial force required to overcome resistance from impinging tissue were too great to be overcome simply by manipulation of wires **50** and tubes **60**. Advantageously, optional placement of inflatable member **130** within replacement valve **20**, only after dynamic self-expansion of apparatus **10"** to the partially deployed configuration at a treatment site, is expected to reduce a delivery profile of the apparatus, as compared to previously known apparatus. This reduction may facilitate retrograde delivery and deployment of apparatus **10"**.

With reference to FIGS. **9** and **10**, methods and apparatus for a balloon-assisted embodiment of the present invention are described in greater detail. FIGS. **9** and **10** illustratively show apparatus **10'** of FIG. **7** used in combination with delivery system **100"** of FIG. **8**. FIG. **10** illustrates a sectional view of delivery system **100"**. Inner shaft **132** of inflatable member **130** preferably is about 4 Fr in diameter, and comprises lumen **133** configured for passage of guidewire G, having a diameter of about 0.035", therethrough. Push tubes **60** and pull wires **50** pass through guidetube **140**, which preferably has a diameter of about 15 Fr or smaller. Guide tube **140** is disposed within lumen **112** of outer sheath **110**, which preferably has a diameter of about 17 Fr or smaller.

In FIG. **9**A, apparatus **10'** is delivered to diseased aortic valve AV within lumen **112** of sheath **110**. In FIG. **9**B, sheath **110** is retracted relative to apparatus **10'** to dynamically self-expand the apparatus to the partially deployed configuration. Also retracted and removed is nosecone **102** which is attached to a pre-slit lumen (not shown) that facilitates its removal prior to loading and advancing of a regular angioplasty balloon catheter over guidewire and inside delivery system **110**.

In FIG. **9**C, pull wires **50** and push tubes **60** are manipulated from external to the patient to foreshorten anchor **30** and sufficiently expand lumen **31** of the anchor to facilitate advancement of inflatable member **130** within replacement valve **20**. Also shown is the tip of an angioplasty catheter **130** being advanced through delivery system **110**.

The angioplasty balloon catheter or inflatable member **130** then is advanced within the replacement valve, as in FIG. **9**D, and additional foreshortening is imposed upon anchor **30** to actuate locks **40**, as in FIG. **9**E. The inflatable member is inflated to further displace the patient's native valve leaflets L and ensure adequate blood flow through, and long-term patency of, replacement valve **20**, as in FIG. **9**F. Inflatable member **130** then is deflated and removed from the patient, as in FIG. **9**G. A different size angioplasty balloon catheter could be used to repeat the same step if deemed necessary by the user. Push tubes **60** optionally may be used to further set leaflet engagement element **120**, or optional barbs B along posts **38**, more deeply within leaflets L, as in FIG. **9**H. Then, delivery system **100"** is removed from the patient, thereby completing percutaneous heart valve replacement.

As will be apparent to those of skill in the art, the order of imposed foreshortening and balloon expansion described in FIGS. **9** and **10** is only provided for the sake of illustration. The actual order may vary according to the needs of a given patient and/or the preferences of a given medical practitioner. Furthermore, balloon-assist may not be required in all instances, and the inflatable member may act merely as a safety precaution employed selectively in challenging clinical cases.

Referring now to FIG. **11**, alternative locks for use with apparatus of the present invention are described. In FIG. **11**A, lock **40'** comprises male interlocking element **44** as described previously. However, female interlocking element **42'** illustratively comprises a triangular shape, as compared to the round shape of interlocking element **42** described previously. The triangular shape of female interlocking element **42'** may facilitate mating of male interlocking element **44** with the female interlocking element without necessitating deformation of the male interlocking element.

In FIG. **11**B, lock **40"** comprises alternative male interlocking element **44'** having multiple in-line arrowheads **46** along posts **38**. Each arrowhead comprises resiliently deformable appendages **48** to facilitate passage through female interlocking element **42**. Appendages **48** optionally comprise eyelets **49**, such that control wire **50** or a secondary wire may pass therethrough to constrain the appendages in the deformed configuration. To actuate lock **40"**, one or more arrowheads **46** of male interlocking element **44'** are drawn through female interlocking element **42**, and the wire is removed from eyelets **49**, thereby causing appendages **48** to resiliently expand and actuate lock **40"**.

Advantageously, providing multiple arrowheads **46** along posts **38** yields a ratchet that facilitates in-vivo determination of a degree of foreshortening imposed upon apparatus of the present invention. Furthermore, optionally constraining appendages **48** of arrowheads **46** via eyelets **49** prevents actuation of lock **40"** (and thus deployment of apparatus of the present invention) even after male element **44'** has been advanced through female element **42**. Only after a medical practitioner has removed the wire constraining appendages **48** is lock **40"** fully engaged and deployment no longer reversible.

Lock **40'"** of FIG. **11**C is similar to lock **40"** of FIG. **11**B, except that optional eyelets **49** on appendages **48** have been

replaced by optional overtube **47**. Overtube **47** serves a similar function to eyelets **49** by constraining appendages **48** to prevent locking until a medical practitioner has determined that apparatus of the present invention has been foreshortened and positioned adequately at a treatment site. Overtube **47** is then removed, which causes the appendages to resiliently expand, thereby fully actuating lock **40'''**.

With reference to FIG. **12**, an alternative locking mechanism is described that is configured to engage the patient's aorta. Male interlocking elements **44''** of locks **40''''** comprise arrowheads **46'** having sharpened appendages **48'**. Upon expansion from the delivery configuration of FIG. **12**A to the foreshortened configuration of FIG. **12**B, apparatus **10** positions sharpened appendages **48'** adjacent the patient's aorta A. Appendages **48'** engage the aortic wall and reduce a risk of device migration over time.

With reference now to FIG. **13**, a risk of paravalvular leakage or regurgitation around apparatus of the present invention is described. In FIG. **13**, apparatus **10** has been implanted at the site of diseased aortic valve AV, for example, using techniques described hereinabove. The surface of native valve leaflets L is irregular, and interface I between leaflets L and anchor **30** may comprise gaps where blood B may seep through. Such leakage poses a risk of blood clot formation or insufficient blood flow.

Referring to FIG. **14**, optional elements for reducing regurgitation or leakage are described. Compliant sacs **200** may be disposed about the exterior of anchor **30** to provide a more efficient seal along irregular interface I. Sacs **200** may be filled with an appropriate material, for example, water, blood, foam or a hydrogel. Alternative fill materials will be apparent.

With reference to FIG. **15**, illustrative arrangements for sacs **200** are provided. In FIG. **15**A, sacs **200** are provided as discrete sacs at different positions along the height of anchor **30**. In FIG. **15**B, the sacs are provided as continuous cylinders at various heights. In FIG. **15**C, a single sac is provided with a cylindrical shape that spans multiple heights. The sacs of FIG. **15**D are discrete, smaller and provided in larger quantities. FIG. **15**E provides a spiral sac. Alternative sac configurations will be apparent to those of skill in the art.

With reference to FIG. **16**, exemplary techniques for fabricating sacs **200** are provided. In FIG. **16**A, sacs **20** comprise 'fish-scale' slots **202** that may be back-filled, for example, with ambient blood passing through replacement valve **20**. In FIG. **16**B, the sacs comprise pores **204** that may be used to fill the sacs. In FIG. **16**C, the sacs open to lumen **31** of anchor **30** and are filled by blood washing past the sacs as the blood moves through apparatus **10**.

FIGS. **17**A-B and **18**A-B show yet another alternative embodiment of the anchor lock. Anchor **300** has a plurality of male interlocking elements **302** having eyelets **304** formed therein. Male interlocking elements are connected to braided structure **300** by inter-weaving elements **302** (and **308**) or alternatively suturing, soldering, welding, or connecting with adhesive. Valve commissures **24** are connected to male interlocking elements **302** along their length. Replacement valve **20** annular base **22** is connected to the distal end **34** of anchor **300** (or **30**) as is illustrated in FIGS. **1**A and **1**B. Male interlocking elements **302** also include holes **306** that mate with tabs **310** extending into holes **312** in female interlocking elements **308**. To lock, control wires **314** passing through eyelets **304** and holes **312** are pulled proximally with respect to the proximal end of braided anchor **300** to draw the male interlocking elements through holes **312** so that tabs **310** engage holes **306** in male interlocking elements **302**. Also shown is release wires **314**B that passes through eyelet **304**B in female interlocking element **308**. If needed, during the procedure, the user may pull on release wires **314**B reversing orientation of tabs **310** releasing the anchor and allowing for repositioning of the device or it's removal from the patient. Only when final positioning as desired by the operating physician, would release wire **314**B and control wire **314** are cut and removed from the patient with the delivery system.

FIGS. **19-21** show an alternative way of releasing the connection between the anchor and its actuating tubes and control wires. Control wires **62** extend through tubes **60** from outside the patient, loop through the proximal region of anchor **30** and extend partially back into tube **60**. The doubled up portion of control wire **62** creates a force fit within tube **60** that maintains the control wire's position with respect to tube **60** when all control wires **62** are pulled proximally to place a proximally directed force on anchor **30**. When a single control wire **62** is pulled proximally, however, the frictional fit between that control wire and the tube in which it is disposed is overcome, enabling the end **63** of control wire **62** to pull free of the tube, as shown in FIG. **21**, thereby releasing anchor **30**.

FIGS. **22-24** show an alternative embodiment of the anchor. Anchor **350** is made of a metal braid, such as Nitinol or stainless steel. A replacement valve **354** is disposed within anchor **350**. Anchor **350** is actuated in substantially the same way as anchor **30** of FIGS. **1-4** through the application of proximally and distally directed forces from control wires (not shown) and tubes **352**.

FIGS. **25** and **26** show yet another embodiment of the delivery and deployment apparatus of the invention. As an alternative to the balloon expansion method described with respect to FIGS. **8**, in this embodiment the nosecone (e.g., element **102** of FIGS. **5**) is replaced by an angioplasty balloon catheter **360**. Thus, expandable balloon catheter **360** recedes sheath **110** on guidewire G. When anchor **30** and valve **20** are expanded through the operation of tubes **60** and the control wires (not shown) as described above, balloon catheter r **360** is retracted proximally within the expanded anchor and valve and expanded further as described above with respect to FIGS. **8**. FIGS. **25** and **26** show yet another embodiment of the delivery and deployment apparatus of the invention. As an alternative to the balloon expansion method described with respect to FIGS. **8**, in this embodiment the nosecone (e.g., element **102** of FIGS. **5**) is replaced by an angioplasty balloon catheter **360**. Thus, expandable balloon catheter **360** precedes sheath **110** on guidewire G. When anchor **30** and valve **20** are expanded through the operation of tubes **60** and the control wires (not shown) as described above, balloon catheter **360** is retracted proximally within the expanded anchor and valve and expanded further as described above with respect to FIGS. **8**.

FIGS. **27-31** show seals **370** that expand over time to seal the interface between the anchor and valve and the patient's tissue. Seals **370** are preferably formed from Nitinol wire surrounded by an expandable foam. As shown in cross-section in FIGS. **28** and **29**, at the time of deployment, the foam **372** is compressed about the wire **374** and held in the compressed form by a time-released coating **376**. After deployment, coating **376** dissolves in vivo to allow foam **372** to expand, as shown in FIGS. **30** and **31**.

FIGS. **32-34** show another way to seal the replacement valve against leakage. A fabric seal **380** extends from the distal end of valve **20** and back proximally over anchor **30** during delivery. When deployed, as shown in FIGS. **33** and **34**, fabric seal **380** bunches up to create fabric flaps and pockets that extend into spaces formed by the native valve leaflets **382**, particularly when the pockets are filled with

blood in response to backflow blood pressure. This arrangement creates a seal around the replacement valve.

FIGS. **35**A-H show another embodiment of a replacement heart valve apparatus in accordance with the present invention. Apparatus **450** comprises replacement valve **460** (see FIGS. **37**B and **38**C) disposed within and coupled to anchor **470**. Replacement valve **460** is preferably biologic, e.g. porcine, but alternatively may be synthetic. Anchor **470** preferably is fabricated from self-expanding materials, such as a stainless steel wire mesh or a nickel-titanium alloy ("Nitinol"), and comprises lip region **472**, skirt region **474**, and body regions **476***a*, **476***b* and **476***c*. Replacement valve **460** preferably is coupled to skirt region **474**, but alternatively may be coupled to other regions of the anchor. As described hereinbelow, lip region **472** and skirt region **474** are configured to expand and engage/capture a patient's native valve leaflets, thereby providing positive registration, reducing paravalvular regurgitation, reducing device migration, etc.

As seen in FIG. **35**A, apparatus **450** is collapsible to a delivery configuration, wherein the apparatus may be delivered via delivery system **410**. Delivery system **410** comprises sheath **420** having lumen **422**, as well as wires **424***a* and **424***b* seen in FIGS. **35**D-**35**G. Wires **424***a* are configured to expand skirt region **474** of anchor **470**, as well as replacement valve **460** coupled thereto, while wires **424***b* are configured to expand lip region **472**.

As seen in FIG. **35**B, apparatus **450** may be delivered and deployed from lumen **422** of catheter **420** while the apparatus is disposed in the collapsed delivery configuration. As seen in FIGS. **35**B-**35**D, catheter **420** is retracted relative to apparatus **450**, which causes anchor **470** to dynamically self-expand to a partially deployed configuration. Wires **424***a* are then retracted to expand skirt region **474**, as seen in FIGS. **35**E and **35**F. Preferably, such expansion may be maintained via locking features described hereinafter.

In FIG. **35**G, wires **424***b* are retracted to expand lip region **472** and fully deploy apparatus **450**. As with skirt region **474**, expansion of lip region **472** preferably may be maintained via locking features. After both lip region **472** and skirt region **474** have been expanded, wires **424** may be removed from apparatus **450**, thereby separating delivery system **410** from the apparatus. Delivery system **410** then may be removed, as seen in FIG. **35**H.

As will be apparent to those of skill in the art, lip region **472** optionally may be expanded prior to expansion of skirt region **474**. As yet another alternative, lip region **472** and skirt region **474** optionally may be expanded simultaneously, in parallel, in a step-wise fashion or sequentially. Advantageously, delivery of apparatus **450** is fully reversible until lip region **472** or skirt region **474** has been locked in the expanded configuration.

With reference now to FIGS. **36**A-E, individual cells of anchor **470** of apparatus **450** are described to detail deployment and expansion of the apparatus. In FIG. **36**A, individual cells of lip region **472**, skirt region **474** and body regions **476***a*, **476***b* and **476***c* are shown in the collapsed delivery configuration, as they would appear while disposed within lumen **422** of sheath **420** of delivery system **410** of FIG. **35**. A portion of the cells forming body regions **476**, for example, every 'nth' row of cells, comprises locking features.

Body region **476***a* comprises male interlocking element **482** of lip lock **480**, while body region **476***b* comprises female interlocking element **484** of lip lock **480**. Male element **482** comprises eyelet **483**. Wire **424***b* passes from female interlocking element **484** through eyelet **483** and back through female interlocking element **484**, such that there is a double strand of wire **424***b* that passes through lumen **422** of catheter **420** for manipulation by a medical practitioner external to the patient. Body region **476***b* further comprises male interlocking element **492** of skirt lock **490**, while body region **476***c* comprises female interlocking element **494** of the skirt lock. Wire **424***a* passes from female interlocking element **494** through eyelet **493** of male interlocking element **492**, and back through female interlocking element **494**. Lip lock **480** is configured to maintain expansion of lip region **472**, while skirt lock **490** is configured to maintain expansion of skirt region **474**.

In FIG. **36**B, anchor **470** is shown in the partially deployed configuration, e.g., after deployment from lumen **422** of sheath **420**. Body regions **476**, as well as lip region **472** and skirt region **474**, self-expand to the partially deployed configuration. Full deployment is then achieved by retracting wires **424** relative to anchor **470**, and expanding lip region **472** and skirt region **474** outward, as seen in FIGS. **36**C and **36**D. As seen in FIG. **36**E, expansion continues until the male elements engage the female interlocking elements of lip lock **480** and skirt lock **490**, thereby maintaining such expansion (lip lock **480** shown in FIG. **36**E). Advantageously, deployment of apparatus **450** is fully reversible until lip lock **480** and/or skirt lock **490** has been actuated.

With reference to FIGS. **37**A-B, isometric views, partially in section, further illustrate apparatus **450** in the fully deployed and expanded configuration. FIG. **37**A illustrates the wireframe structure of anchor **470**, while FIG. **37**B illustrates an embodiment of anchor **470** covered in a biocompatible material B. Placement of replacement valve **460** within apparatus **450** may be seen in FIG. **37**B. The patient's native valve is captured between lip region **472** and skirt region **474** of anchor **470** in the fully deployed configuration (see FIG. **38**B).

Referring to FIGS. **38**A-C, in conjunction with FIGS. **35** and **36**, a method for percutaneously replacing a patient's diseased aortic valve with apparatus **450** is described. Delivery system **410**, having apparatus **450** disposed therein, is percutaneously advanced, preferably in a retrograde fashion, through a patient's aorta A to the patient's diseased aortic valve AV. Sheath **420** is positioned such that its distal end is disposed within left ventricle LV of the patient's heart H. As described with respect to FIG. **35**, apparatus **450** is deployed from lumen **422** of sheath **420**, for example, under fluoroscopic guidance, such that skirt section **474** is disposed within left ventricle LV, body section **476***b* is disposed across the patient's native valve leaflets L, and lip section **472** is disposed within the patient's aorta A. Advantageously, apparatus **450** may be dynamically repositioned to obtain proper alignment with the anatomical landmarks. Furthermore, apparatus **450** may be retracted within lumen **422** of sheath **420** via wires **424**, even after anchor **470** has dynamically expanded to the partially deployed configuration, for example, to abort the procedure or to reposition sheath **420**.

Once properly positioned, wires **424***a* are retracted to expand skirt region **474** of anchor **470** within left ventricle LV. Skirt region **474** is locked in the expanded configuration via skirt lock **490**, as previously described with respect to FIG. **36**. In FIG. **38**A, skirt region **474** is maneuvered such that it engages the patient's valve annulus An and/or native valve leaflets L, thereby providing positive registration of apparatus **450** relative to the anatomical landmarks.

Wires **424***b* are then actuated external to the patient in order to expand lip region **472**, as previously described in FIG. **35**. Lip region **472** is locked in the expanded configuration via lip lock **480**. Advantageously, deployment of apparatus **450** is fully reversible until lip lock **480** and/or skirt lock **490** has been actuated. Wires **424** are pulled from eyelets **483** and **493**,

and delivery system **410** is removed from the patient. As will be apparent, the order of expansion of lip region **472** and skirt region **474** may be reversed, concurrent, etc.

As seen in FIG. **38**B, lip region **472** engages the patient's native valve leaflets L, thereby providing additional positive registration and reducing a risk of lip region **472** blocking the patient's coronary ostia O. FIG. **38**C illustrates the same in cross-sectional view, while also showing the position of replacement valve **460**. The patient's native leaflets are engaged and/or captured between lip region **472** and skirt region **474**. Advantageously, lip region **472** precludes distal migration of apparatus **450**, while skirt region **474** precludes proximal migration. It is expected that lip region **472** and skirt region **474** also will reduce paravalvular regurgitation.

With reference to FIGS. **39-41**, a first embodiment of two-piece apparatus of the present invention adapted for percutaneous replacement of a patient's heart valve is described. As seen in FIG. **41**, apparatus **510** comprises a two-piece device having custom-designed expandable anchor piece **550** of FIG. **39** and expandable replacement valve piece **600** of FIG. **40**. Both anchor piece **550** and valve piece **600** have reduced delivery configurations and expanded deployed configurations. Both may be either balloon expandable (e.g. fabricated from a stainless steel) or self-expanding (e.g. fabricated from a nickel-titanium alloy ("Nitinol") or from a wire mesh) from the delivery to the deployed configurations.

When replacing a patient's aortic valve, apparatus **510** preferably may be delivered through the patient's aorta without requiring a transseptal approach, thereby reducing patient trauma, complications and recovery time. Furthermore, apparatus **510** enables dynamic repositioning of anchor piece **550** during delivery and facilitates positive registration of apparatus **510** relative to the native position of the patient's valve, thereby reducing a risk of device migration and reducing a risk of blocking or impeding flow to the patient's coronary ostia. Furthermore, the expanded deployed configuration of apparatus **510**, as seen in FIG. **41**D, is adapted to reduce paravalvular regurgitation, as well as to facilitate proper seating of valve piece **600** within anchor piece **550**.

As seen in FIG. **39**, anchor piece **550** preferably comprises three sections. Lip section **560** is adapted to engage the patient's native valve leaflets to provide positive registration and ensure accurate placement of the anchor relative to the patient's valve annulus during deployment, while allowing for dynamic repositioning of the anchor during deployment. Lip section **560** also maintains proper positioning of composite anchor/valve apparatus **510** post-deployment to preclude distal migration. Lip section **560** optionally may be covered or coated with biocompatible film B (see FIG. **41**) to ensure engagement of the native valve leaflets. It is expected that covering lip section **560** with film B especially would be indicated when the native leaflets are stenosed and/or fused together

Groove section **570** of anchor piece **550** is adapted to engage an expandable frame portion, described hereinbelow, of valve piece **600** to couple anchor piece **550** to valve piece **600**. As compared to previously known apparatus, groove section **570** comprises additional material and reduced openings or gaps G, which is expected to reduce tissue protrusion through the gaps upon deployment, thereby facilitating proper seating of the valve within the anchor. Groove section **570** optionally may be covered or coated with biocompatible film B (see FIG. **41**) to further reduce native valve tissue protrusion through gaps G.

Finally, skirt section **580** of anchor piece **550** maintains proper positioning of composite anchor/valve apparatus **510** post-deployment by precluding proximal migration. When replacing a patient's aortic valve, skirt section **580** is deployed within the patient's left ventricle. As with lip section **560** and groove section **570**, skirt section **580** optionally may be covered or coated with biocompatible film B (see FIG. **41**) to reduce paravalvular regurgitation. As will be apparent to those of skill in the art, all, a portion of, or none of anchor piece **50** may be covered or coated with biocompatible film B.

In FIG. **39**A, a portion of anchor piece **550** has been flattened out to illustrate the basic anchor cell structure, as well as to illustrate techniques for manufacturing anchor piece **550**. In order to form the entire anchor, anchor **550** would be bent at the locations indicated in FIG. **39**A, and the basic anchor cell structure would be revolved to form a joined 360° structure. Lip section **560** would be bent back into the page to form a lip that doubles over the groove section, groove section **570** would be bent out of the page into a 'C'- or 'U'-shaped groove, while skirt section **580** would be bent back into the page. FIG. **39**B shows the anchor portion after bending and in an expanded deployed configuration.

The basic anchor cell structure seen in FIG. **39**A is preferably formed through laser cutting of a flat sheet or of a hollow tube placed on a mandrel. When formed from a flat sheet, the sheet would be cut to the required number of anchor cells, bent to the proper shape, and revolved to form a cylinder. The ends of the cylinder would then be joined together, for example, by heat welding.

If balloon expandable, anchor piece **550** would be formed from an appropriate material, such as stainless steel, and then crimped onto a balloon delivery catheter in a collapsed delivery configuration. If self-expanding and formed from a shape-memory material, such as a nickel-titanium alloy ("Nitinol"), the anchor piece would be heat-set such that it could be constrained within a sheath in the collapsed delivery configuration, and then would dynamically self-expand to the expanded deployed configuration upon removal of the sheath. Likewise, if anchor piece **550** were formed from a wire mesh or braid, such as a spring steel braid, the anchor would be constrained within a sheath in the delivery configuration and dynamically expanded to the deployed configuration upon removal of the sheath.

In FIG. **40**, valve piece **600** is described in greater detail. FIG. **40**A illustrates valve piece **600** in a collapsed delivery configuration, while FIG. **40**B illustrates the valve piece in an expanded deployed configuration. Valve piece **600** comprises replacement valve **610** coupled to expandable frame **620**. Replacement valve **610** is preferably biologic, although synthetic valves may also be used. Replacement valve **610** preferably comprises three leaflets **611** coupled to three posts **621** of expandable frame **620**. Expandable frame **620** is preferably formed from a continuous piece of material and may comprise tips **622** in the collapsed delivery configuration, which expand to form hoop **624** in the deployed configuration. Hoop **624** is adapted to engage groove section **570** of anchor piece **550** for coupling anchor piece **550** to valve piece **600**. As with anchor piece **550**, valve piece **600** may be balloon expandable and coupled to a balloon delivery catheter in the delivery configuration. Alternatively, anchor piece **550** may be self-expanding, e.g. Nitinol or wire mesh, and constrained within a sheath in the delivery configuration.

Referring again to FIG. **41**, a method for deploying valve piece **600** and coupling it to deployed anchor piece **550** to form two-piece apparatus **510** is described. In FIG. **41**A, valve piece **600** is advanced within anchor piece **550** in an at least partially compressed delivery configuration. In FIG. **41**B, tips **622** of frame **620** are expanded such that they engage groove section **570** of anchor piece **550**. In FIG. **41**C, frame **620** continues to expand and form hoop **624**. Hoop **624**

flares out from the remainder of valve piece **600** and acts to properly locate the hoop within groove section **570**. FIG. **41**D shows valve piece **600** in a fully deployed configuration, properly seated and friction locked within groove section **570** to form composite anchor/valve apparatus **510**.

Anchor piece **550** and valve piece **600** of apparatus **510** preferably are spaced apart and releasably coupled to a single delivery catheter while disposed in their reduced delivery configurations. Spacing the anchor and valve apart reduces a delivery profile of the device, thereby enabling delivery through a patient's aorta without requiring a transseptal approach. With reference to FIG. **42**, a first embodiment of single catheter delivery system **700** for use with apparatus **510** is described. Delivery system **700** is adapted for use with a preferred self-expanding embodiment of apparatus **510**.

Delivery system **700** comprises delivery catheter **710** having inner tube **720**, middle distal tube **730**, and outer tube **740**. Inner tube **720** comprises lumen **722** adapted for advancement over a standard guide wire, per se known. Middle distal tube **730** is coaxially disposed about a distal region of inner tube **720** and is coupled to a distal end **724** of the inner tube, thereby forming proximally-oriented annular bore **732** between inner tube **720** and middle tube **730** at a distal region of delivery catheter **710**. Outer tube **740** is coaxially disposed about inner tube **720** and extends from a proximal region of the inner tube to a position at least partially coaxially overlapping middle distal tube **730**. Outer tube **740** preferably comprises distal step **742**, wherein lumen **743** of outer tube **740** is of increased diameter. Distal step **742** may overlap middle distal tube **730** and may also facilitate deployment of valve piece **600**, as described hereinbelow with respect to FIG. **45**.

Proximally-oriented annular bore **732** between inner tube **720** and middle distal tube **730** is adapted to receive skirt section **580** and groove section **570** of anchor piece **550** in the reduced delivery configuration. Annular space **744** formed at the overlap between middle distal tube **730** and outer tube **740** is adapted to receive lip section **560** of anchor piece **550** in the reduced delivery configuration. More proximal annular space **746** between inner tube **720** and outer tube **740** may be adapted to receive replacement valve **610** and expandable frame **620** of valve piece **600** in the reduced delivery configuration.

Inner tube **720** optionally may comprise retainer elements **726***a* and **726***b* to reduce migration of valve piece **600**. Retainer elements **726** preferably are fabricated from a radiopaque material, such as platinum-iridium or gold, to facilitate deployment of valve piece **600**, as well as coupling of the valve piece to anchor piece **550**. Additional or alternative radiopaque elements may be disposed at other locations about delivery system **700** or apparatus **510**, for example, in the vicinity of anchor piece **550**.

With reference now to FIG. **43**, an alternative delivery system for use with apparatus of the present invention is described. Delivery system **750** comprises two distinct catheters adapted to deliver the anchor and valve pieces, respectively: anchor delivery catheter **710'** and valve delivery catheter **760**. In use, catheters **710'** and **760** may be advanced sequentially to a patient's diseased heart valve for sequential deployment and coupling of anchor piece **550** to valve piece **600** to form composite two-piece apparatus **510**.

Delivery catheter **710'** is substantially equivalent to catheter **710** described hereinabove, except that catheter **710'** does not comprise retainer elements **726**, and annular space **746** does not receive valve piece **600**. Rather, valve piece **600** is received within catheter **760** in the collapsed delivery configuration. Catheter **760** comprises inner tube **770** and outer tube **780**. Inner tube **770** comprises lumen **772** for advancement of catheter **760** over a guide wire. The inner tube optionally may also comprise retain elements **774***a* and **774***b*, e.g. radiopaque retainer elements **774**, to reduce migration of valve piece **600**. Outer tube **780** is coaxially disposed about inner tuber **770** and preferably comprises distal step **782** to facilitate deployment and coupling of valve piece **600** to anchor piece **550**, as described hereinbelow. Valve piece **600** may be received in annular space **776** between inner tube **770** and outer tube **780**, and more preferably may be received within annular space **776** between retainer elements **774**.

Referring now to FIG. **44**, another alternative delivery system is described. As discussed previously, either anchor piece **550** or valve piece **600** (or portions thereof or both) may be balloon expandable from the delivery configuration to the deployed configuration. Delivery system **800** is adapted for delivery of an embodiment of apparatus **510** wherein the valve piece is balloon expandable. Additional delivery systems—both single and multi-catheter—for deployment of alternative combinations of balloon and self-expandable elements of apparatus of the present invention will be apparent to those of skill in the art in view of the illustrative delivery systems provided in FIGS. **42-44**.

In FIG. **44**, delivery system **800** comprises delivery catheter **710"**. Delivery catheter **710"** is substantially equivalent to delivery catheter **710** of delivery system **700**, except that catheter **710"** does not comprise retainer elements **726**, and annular space **746** does not receive the valve piece. Additionally, catheter **710"** comprises inflatable balloon **802** coupled to the exterior of outer tube **740"**, as well as an inflation lumen (not shown) for reversibly delivering an inflation medium from a proximal region of catheter **710"** into the interior of inflatable balloon **802** for expanding the balloon from a delivery configuration to a deployed configuration. Valve piece **600** may be crimped to the exterior of balloon **802** in the delivery configuration, then deployed and coupled to anchor piece **550** in vivo. Delivery catheter **710"** preferably comprises radiopaque marker bands **804***a* and **804***b* disposed on either side of balloon **802** to facilitate proper positioning of valve piece **600** during deployment of the valve piece, for example, under fluoroscopic guidance.

With reference now to FIG. **45**, in conjunction with FIGS. **39-42**, an illustrative method of percutaneously replacing a patient's diseased heart valve using apparatus of the present invention is described. In FIG. **45**A, a distal region of delivery system **700** of FIG. **42** has been delivered through a patient's aorta A, e.g., over a guide wire and under fluoroscopic guidance using well-known percutaneous techniques, to a vicinity of diseased aortic valve AV of heart H. Apparatus **510** of FIGS. **39-41** is disposed in the collapsed delivery configuration within delivery catheter **710** with groove section **570** and skirt section **580** of anchor piece **550** collapsed within annular bore **732**, and lip section **560** of anchor piece **550** collapsed within annular space **744**. Valve piece **600** is disposed in the collapsed delivery configuration between retainer elements **726** within more proximal annular space **746**. Separation of anchor piece **550** and valve piece **600** of apparatus **510** along the longitudinal axis of delivery catheter **710** enables percutaneous aortic delivery of apparatus **510** without requiring a transseptal approach.

Aortic valve AV comprises native valve leaflets L attached to valve annulus An. Coronary ostia O are disposed just proximal of diseased aortic valve AV. Coronary ostia O connect the patient's coronary arteries to aorta A and are the conduits through which the patient's heart muscle receives oxygenated blood. As such, it is critical that the ostia remain unobstructed post-deployment of apparatus **510**.

In FIG. **45**A, a distal end of delivery catheter **710** has been delivered across diseased aortic valve AV into the patient's left ventricle LV. As seen in FIG. **45**B, outer tube **740** is then retracted proximally relative to inner tube **720** and middle distal tube **730**. Outer tube **740** no longer coaxially overlaps middle distal tube **730**, and lip section **560** of anchor piece **550** is removed from annular space **744**. Lip section **560** self-expands to the deployed configuration. As seen in FIG. **45**C, inner tube **720** and middle tube **730** (or all of delivery catheter **710**) are then distally advanced until lip section **560** engages the patient's native valve leaflets L, thereby providing positive registration of anchor piece **550** to leaflets L. Registration may be confirmed, for example, via fluoroscopic imaging of radiopaque features coupled to apparatus **510** or delivery system **700** and/or via resistance encountered by the medical practitioner distally advancing anchor piece **550**.

Lip section **560** may be dynamically repositioned until it properly engages the valve leaflets, thereby ensuring proper positioning of anchor piece **550** relative to the native coronary ostia O, as well as the valve annulus An, prior to deployment of groove section **570** and skirt section **580**. Such multi-step deployment of anchor piece **550** enables positive registration and dynamic repositioning of the anchor piece. This is in contrast to previously known percutaneous valve replacement apparatus.

As seen in FIG. **45**D, once leaflets L have been engaged by lip section **560** of anchor piece **550**, inner tube **720** and middle distal tube **730** are further distally advanced within left ventricle LV, while outer tube **740** remains substantially stationary. Lip section **560**, engaged by leaflets L, precludes further distal advancement/migration of anchor piece **550**. As such, groove section **570** and skirt section **580** are pulled out of proximally-oriented annular bore **732** between inner tube **720** and middle distal tube **730** when the tubes are distally advanced. The groove and skirt sections self-expand to the deployed configuration, as seen in FIG. **45**E. Groove section **570** pushes native valve leaflets L and lip section **560** against valve annulus An, while skirt section **580** seals against an interior wall of left ventricle LV, thereby reducing paravalvular regurgitation across aortic valve AV and precluding proximal migration of anchor piece **550**.

With anchor piece **550** deployed and native aortic valve AV displaced, valve piece **600** may be deployed and coupled to the anchor piece to achieve percutaneous aortic valve replacement. Outer tube **740** is further proximally retracted relative to inner tube **720** such that valve piece **600** is partially deployed from annular space **746** between inner tube **720** and outer tube **740**, as seen in FIG. **45**F. Expandable frame **620** coupled to replacement valve **610** partially self-expands such that tips **622** partially form hoop **624** for engagement of groove section **570** of anchor piece **550** (see FIG. **41**B). A proximal end of expandable frame **620** is engaged by distal step **742** of outer tube **740**.

Subsequent re-advancement of outer tube **740** relative to inner tube **720** causes distal step **742** to distally advance valve piece **600** within anchor piece **550** until tips **622** of expandable frame **620** engage groove section **570** of anchor piece **550**, as seen in FIG. **45**G. As discussed previously, groove section **570** comprises additional material and reduced openings or gaps G, as compared to previously known apparatus, which is expected to reduce native valve tissue protrusion through the gaps and facilitate engagement of tips **622** with the groove section. Outer tube **740** then is proximally retracted again relative to inner tube **720**, and valve piece **600** is completely freed from annular space **746**. Frame **620** of valve piece **600** fully expands to form hoop **624**, as seen in FIG. **45**H.

Hoop **624** friction locks within groove section **570** of anchor piece **550**, thereby coupling the anchor piece to the valve piece and forming composite two-piece apparatus **510**, which provides a percutaneous valve replacement. As seen in FIG. **45**I, delivery catheter **710** may then be removed from the patient, completing the procedure. Blood may freely flow from left ventricle LV through replacement valve **610** into aorta A. Coronary ostia O are unobstructed, and paravalvular regurgitation is reduced by skirt section **580** of anchor piece **550**.

Referring now to FIG. **46**, an alternative embodiment of two-piece apparatus **510** is described comprising an alignment/locking mechanism. Such a mechanism may be provided in order to ensure proper radial alignment of the expandable frame of the valve piece with the groove section of the anchor piece, as well as to ensure proper longitudinal positioning of the frame within the hoop. Additionally, the alignment/locking mechanism may provide a secondary lock to further reduce a risk of the anchor piece and the valve piece becoming separated post-deployment and coupling of the two pieces to achieve percutaneous valve replacement.

In FIG. **46**, apparatus **510'** comprises valve piece **600'** of FIG. **46**A and anchor piece **550'** of FIG. **46**B. Anchor piece **550'** and valve piece **600'** are substantially the same as anchor piece **550** and valve piece **600** described hereinabove, except that anchor piece **550'** comprises first portion **652** of illustrative alignment/locking mechanism **650**, while valve piece **600'** comprises second portion **654** of the alignment/locking mechanism for coupling to the first portion. First portion **652** illustratively comprises three guideposts **653** coupled to skirt section **580'** of anchor piece **550'** (only one guidepost shown in the partial view of FIG. **46**B), while second portion **654** comprises three sleeves **655** coupled to posts **621'** of expandable frame **620'** of valve piece **600'**.

When anchor piece **550'** is self-expanding and collapsed in the delivery configuration, guideposts **653** may be deployed with skirt section **580'**, in which case guideposts **653** would rotate upward with respect to anchor piece **550'** into the deployed configuration of FIG. **46**B. Alternatively, when anchor piece **550'** is either balloon or self-expanding and is collapsed in the delivery configuration, guideposts **653** may be collapsed against groove section **570'** of the anchor piece and may be deployed with the groove section. Deploying guideposts **653** with skirt section **580'** has the advantages of reduced delivery profile and ease of manufacturing, but has the disadvantage of significant dynamic motion during deployment. Conversely, deploying guideposts **653** with groove section **570'** has the advantage of minimal dynamic motion during deployment, but has the disadvantage of increased delivery profile. Additional deployment configurations will be apparent to those of skill in the art. As will also be apparent, first portion **652** of alignment/locking mechanism **650** may be coupled to alternative sections of anchor piece **550'** other than skirt section **580'**.

Sleeves **655** of second portion **654** of alignment/locking mechanism **650** comprise lumens **656** sized for coaxial disposal of sleeves **655** about guideposts **653** of first portion **652**. Upon deployment, sleeves **655** may friction lock to guideposts **653** to ensure proper radial and longitudinal alignment of anchor piece **550'** with valve piece **600'**, as well as to provide a secondary lock of the anchor piece to the valve piece. The secondary lock enhances the primary friction lock formed by groove section **570'** of the anchor piece with hoop **624'** of expandable frame **620'** of the valve piece.

To facilitate coupling of the anchor piece to the valve piece, suture or thread may pass from optional eyelets **651***a* of guideposts **653** through lumens **656** of sleeves **655** to a proxi-

mal end of the delivery catheter (see FIG. **47**). In this manner, second portion **654** of mechanism **650** may be urged into alignment with first portion **652**, and optional suture knots (not shown), e.g. pre-tied suture knots, may be advanced on top of the mechanism post-coupling of the two portions to lock the two portions together. Alternatively, guideposts **653** may comprise optional one-way valves **651***b* to facilitate coupling of the first portion to the second portion. Specifically, sleeves **655** may be adapted for coaxial advancement over one-way valves **651***b* in a first direction that couples the sleeves to guideposts **653**, but not in a reverse direction that would uncouple the sleeves from the guideposts.

Referring now to FIG. **47**, an alternative embodiment of apparatus **510'** comprising an alternative alignment/locking mechanism is described. Apparatus **510"** is illustratively shown in conjunction with delivery system **700** described hereinabove with respect to FIG. **42**. Valve piece **600"** is shown partially deployed from outer tube **740** of catheter **710**. For the sake of illustration, replacement valve **610"** of valve piece **600"**, as well as inner tube **720** and middle distal tube **730** of delivery catheter **710**, are not shown in FIG. **47**.

In FIG. **47**, anchor piece **550"** of apparatus **510"** comprises first portion **652'** of alignment/locking mechanism **650'**, while valve piece **600"** comprises second portion **654'** of the alternative alignment/locking mechanism. First portion **652'** comprises eyelets **660** coupled to groove section **570"** of anchor piece **550"**. Second portion **654'** comprises knotted loops of suture **662** coupled to tips **622"** of expandable frame **620"** of valve piece **600"**. Suture **661** extends from knotted loops of suture **662** through eyelets **660** and out through annular space **746** between outer tube **740** and inner tube **720** (see FIG. **42**) of catheter **710** to a proximal end of delivery system **700**. In this manner, a medical practitioner may radially and longitudinally align valve piece **600"** with anchor piece **550"** by proximally retracting sutures **661** (as shown by arrows in FIG. **47**) while distally advancing distal step **742** of outer tube **740** against valve piece **600"** until tips **622"** of the valve piece engage groove section **570"** of anchor piece **550"**. Proximal retraction of outer tube **740** then causes expandable frame **620"** to further expand and form hoop **624"** that friction locks with groove section **570"** of anchor piece **550"**, thereby forming apparatus **510"** as described hereinabove with respect to apparatus **510**. A secondary lock may be achieved by advancing optional suture knots (not shown) to the overlap of eyelets **660** and knotted loops of suture **662**. Such optional suture knots preferably are pre-tied.

With reference now to FIG. **48**, yet another alternative embodiment of apparatus **510'**, comprising yet another alternative alignment/locking mechanism **650**, is described. First portion **652"** of alignment/locking mechanism **650"** is coupled to anchor piece **550'"** of apparatus **510'"**, while second portion **654"** is coupled to valve piece **600'"**. The first portion comprises male posts **670** having flared ends **671**, while the second portion comprises female guides **672** coupled to tips **622'"** of expandable frame **620'"** of valve piece **600'"**.

Female guides **672** are translatable about male posts **670**, but are constrained by flared ends **671** of the male posts. In this manner, anchor piece **550'"** and valve piece **600'"** remain coupled and in radial alignment with one another at all times—including delivery—but may be longitudinally separated from one another during delivery. This facilitates percutaneous delivery without requiring a transseptal approach, while mitigating a risk of inadvertent deployment of the anchor and valve pieces in an uncoupled configuration. Additional alignment/locking mechanisms will be apparent in view of the mechanisms described with respect to FIGS. **46-48**.

Prior to implantation of one of the replacement valves described above, it may be desirable to perform a valvoplasty on the diseased valve by inserting a balloon into the valve and expanding it using saline mixed with a contrast agent. In addition to preparing the valve site for implant, fluoroscopic viewing of the valvoplasty will help determine the appropriate size of replacement valve implant to use.

What is claimed is:

1. A method for endovascularly replacing a heart valve of a patient, the method comprising:

endovascularly delivering a replacement heart valve comprising replacement leaflets and an expandable anchor to a vicinity of the heart valve in an unexpanded configuration, in the unexpanded configuration the replacement heart valve is disposed within and coupled to the expandable anchor; and

deploying the anchor to a deployed configuration in which the anchor contacts tissue at a first anchor site by applying a distally directed and proximally directed non-hydraulic and non-pneumatic actuation force on the replacement heart valve after the anchor is completely out of a delivery sheath, wherein applying the distally directed and proximally directed non-hydraulic and non-pneumatic actuation force radially expands the anchor, and wherein, in the deployed configuration, the replacement heart valve is seated within the expandable anchor.

2. A method for endovascularly replacing a heart valve of a patient, the method comprising:

endovascularly delivering a replacement heart valve comprising replacement leaflets and an expandable anchor to a vicinity of the heart valve in an unexpanded configuration;

deploying the anchor to a deployed configuration in which the anchor contacts tissue at an anchor site at the vicinity of the heart valve by applying a distally directed and a proximally directed non-hydraulic and non-pneumatic actuation force on the replacement heart valve after the anchor is completely outside of a delivery sheath, wherein applying the distally directed and proximally directed non-hydraulic and non-pneumatic actuation force radially expands the anchor;

repositioning the anchor wherein repositioning comprises at least partially contracting the anchor and expanding the anchor.

3. A method for endovascularly replacing a heart valve of a patient, the method comprising:

endovascularly delivering a replacement valve and an expandable anchor to a vicinity of the heart valve in an unexpanded configuration;

radially expanding the anchor to a deployed configuration in which the anchor contacts tissue at an anchor site in the vicinity of the heart valve by applying an axially directed actuation force on the anchor with a deployment tool, wherein the deployment tool is releasably coupled to the anchor and is adapted to apply a distally and a proximally directed force on the anchor after the anchor is completely out of a delivery catheter;

repositioning the anchor at a second anchor site, wherein repositioning comprises contracting the anchor and re-expanding the anchor;

deploying the anchor at the second anchor site; and

releasing the anchor from the deployment tool.

4. The method of claim **1** further comprising releasing the anchor from a deployment tool.

5. The method of claim **1** wherein the delivering step comprises delivering the replacement leaflets coupled to the anchor.

6. The method of claim **1** wherein the replacement heart valve comprises an aortic valve and wherein the delivering step comprises endovascularly delivering the expandable anchor and replacement leaflets to the vicinity of the aortic valve along a retrograde approach.

7. The method of claim **1** further comprising locking the anchor in an expanded configuration.

8. The method of claim **1** wherein the anchor comprises a proximal region and a distal region and wherein the deploying step comprises expanding the proximal and distal regions separately.

9. The method of claim **3** wherein the expanding step comprises applying an external non-hydraulic or non-pneumatic actuation force on the anchor.

10. The method of claim **3** further comprising registering the anchor with the anchor site.

11. The method of claim **3** wherein the delivering step comprises delivering the replacement heart valve coupled to the anchor.

12. The method of claim **2** wherein the contracting step comprises applying an external non-hydraulic or non-pneumatic actuation force on the anchor.

13. The method of claim **2** further comprising releasing the anchor from a deployment tool.

14. The method of claim **2** wherein the delivering step comprises delivering the replacement leaflets coupled to the anchor.

15. The method of claim **2** wherein the heart valve is an aortic valve and wherein the delivering step comprises endovascularly delivering the expandable anchor and replacement leaflets to the vicinity of the aortic valve along a retrograde approach.

16. The method of claim **2** further comprising locking the anchor in an expanded configuration.

17. The method of claim **2** further comprising registering the anchor with the anchor site.

18. The method of claim **17** wherein the registering step comprises contacting tissue of the heart valve to resist movement of the anchor in at least a proximal or a distal direction prior to deploying the anchor.

19. The method of claim **2** wherein the anchor comprises a proximal region and a distal region and wherein the deploying step comprises expanding the proximal and distal regions separately.

20. The method of claim **2** further comprising visually observing the anchor location.

21. The method of claim **20** wherein the step of observing occurs prior to locking the anchor.

22. The method of claim **1** further comprising locking the anchor, unlocking the anchor, and adjusting its position in an expanded configuration before relocking the anchor and releasing a deployment mechanism.

23. The method of claim **1** further comprising locking the anchor, unlocking the anchor, and adjusting its position in an expanded configuration.

24. The method of claim **1** further comprising locking the anchor and unlocking the anchor.

25. The method of claim **2** further comprising locking the anchor, unlocking the anchor, and adjusting its position in an expanded configuration before locking the anchor and releasing a deployment mechanism.

26. The method of claim **2** further comprising locking the anchor, unlocking the anchor, and adjusting its position in an expanded configuration.

27. The method of claim **2** further comprising locking the anchor and unlocking the anchor.

* * * * *