US008855813B2

(12) **United States Patent**
Ziegler et al.

(10) **Patent No.: US 8,855,813 B2**
(45) **Date of Patent: Oct. 7, 2014**

(54) **AUTONOMOUS SURFACE CLEANING ROBOT FOR WET AND DRY CLEANING**

(75) Inventors: **Andrew Ziegler**, Arlington, MA (US); **Duane Gilbert**, Goffstown, NH (US); **Christopher John Morse**, Malden, MA (US); **Scott Pratt**, Cary, NC (US); **Paul Sandin**, Brookline, NH (US); **Nancy Dussault**, Weymouth, MA (US); **Andrew Jones**, Roslindale, MA (US)

(73) Assignee: **iRobot Corporation**, Bedford, MA (US)

(*) Notice: Subject to any disclaimer, the term of this patent is extended or adjusted under 35 U.S.C. 154(b) by 318 days.

(21) Appl. No.: **13/280,813**

(22) Filed: **Oct. 25, 2011**

(65) **Prior Publication Data**

US 2012/0036659 A1 Feb. 16, 2012

Related U.S. Application Data

(63) Continuation of application No. 11/359,961, filed on Feb. 21, 2006, which is a continuation-in-part of

(Continued)

(51) **Int. Cl.**
G06F 19/00 (2011.01)
G05B 19/04 (2006.01)

(Continued)

(52) **U.S. Cl.**
CPC ***A47L 11/302*** (2013.01); ***A47L 11/4083*** (2013.01); ***B60B 33/0068*** (2013.01); ***B60B 33/0049*** (2013.01); ***B60B 33/0073*** (2013.01);

(Continued)

(58) **Field of Classification Search**
None
See application file for complete search history.

(56) **References Cited**

U.S. PATENT DOCUMENTS

1,755,054 A 4/1930 Darst
1,780,221 A 11/1930 Buchmann

(Continued)

FOREIGN PATENT DOCUMENTS

AU 2003275566 A1 6/2004
DE 2128842 C3 12/1980

(Continued)

OTHER PUBLICATIONS

Jarosiewicz et al. "Final Report—Lucid", University of Florida, Departmetn of Electrical and Computer Engineering, EEL 5666—Intelligent Machine Design Laboratory, 50 pages, Aug. 4, 1999.

(Continued)

Primary Examiner — Bhavesh V Amin
(74) *Attorney, Agent, or Firm* — Fish & Richardson P.C.

(57) **ABSTRACT**

An autonomous floor cleaning robot includes a transport drive and control system arranged for autonomous movement of the robot over a floor for performing cleaning operations. The robot chassis carries a first cleaning zone comprising cleaning elements arranged to suction loose particulates up from the cleaning surface and a second cleaning zone comprising cleaning elements arraigned to apply a cleaning fluid onto the surface and to thereafter collect the cleaning fluid up from the surface after it has been used to clean the surface. The robot chassis carries a supply of cleaning fluid and a waste container for storing waste materials collected up from the cleaning surface.

19 Claims, 63 Drawing Sheets

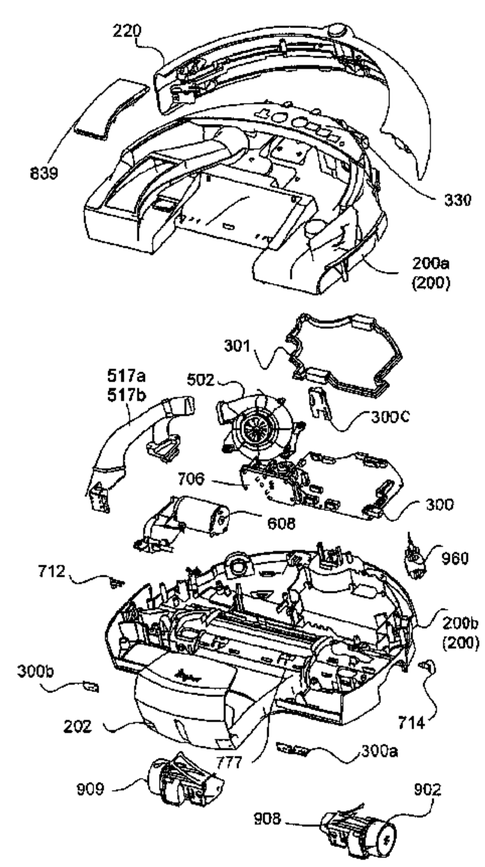

Related U.S. Application Data

application No. 11/134,212, filed on May 21, 2005, now abandoned, and a continuation-in-part of application No. 11/134,213, filed on May 21, 2005, now abandoned, and a continuation-in-part of application No. 11/207,575, filed on Aug. 19, 2005, now Pat. No. 8,392,021, and a continuation-in-part of application No. 11/207,620, filed on Aug. 19, 2005, now Pat. No. 7,389,156, and a continuation-in-part of application No. 11/207,574, filed on Aug. 19, 2005, now Pat. No. 7,620,476, which is a continuation-in-part of application No. 11/133,796, filed on May 21, 2005, now abandoned.

(60) Provisional application No. 60/654,838, filed on Feb. 18, 2005.

(51) **Int. Cl.**

G05B 19/00	(2006.01)
A47L 11/40	(2006.01)
B60B 33/00	(2006.01)
F04D 29/42	(2006.01)
A47L 7/00	(2006.01)
G05D 1/02	(2006.01)
A47L 9/00	(2006.01)
A47L 11/30	(2006.01)
A47L 5/14	(2006.01)
C11D 1/62	(2006.01)
C11D 1/75	(2006.01)

(52) **U.S. Cl.**

CPC ***B60B 33/0021*** (2013.01); ***B60B 33/0057*** (2013.01); ***F04D 29/4233*** (2013.01); ***A47L 11/40*** (2013.01); ***A47L 7/0042*** (2013.01); ***G05D 1/0219*** (2013.01); ***A47L 11/4016*** (2013.01); ***B60B 33/0028*** (2013.01); *A47L 2201/00* (2013.01); ***A47L 7/0038*** (2013.01); ***G05D 1/0272*** (2013.01); ***A47L 7/0028*** (2013.01); *G05D 1/0225* (2013.01); ***B60B 33/0039*** (2013.01); ***A47L 9/009*** (2013.01); *C11D 1/62* (2013.01); *G05D 2201/0203* (2013.01); *C11D 1/75* (2013.01); ***B60B 33/001*** (2013.01); *A47L 2201/04* (2013.01); ***G05D 1/0227*** (2013.01); ***A47L 5/14*** (2013.01)

USPC **700/245**; 700/253; 700/255; 700/258

(56) **References Cited**

U.S. PATENT DOCUMENTS

1,970,302	A		8/1934	Gerhardt
2,136,324	A		11/1938	John
2,302,111	A		11/1942	Dow et al.
2,353,621	A		7/1944	Sav et al.
2,770,825	A		11/1956	Pullen
2,930,055	A		3/1960	Fallen et al.
3,119,369	A		1/1964	Harland et al.
3,166,138	A		1/1965	Dunn
3,333,564	A		8/1967	Waters
3,381,652	A		5/1968	Schaefer et al.
3,457,575	A		7/1969	Bienek
3,550,714	A		12/1970	Bellinger
3,569,727	A		3/1971	Aggarwal et al.
3,638,356	A		2/1972	La Branche
3,649,981	A		3/1972	Woodworth
3,674,316	A		7/1972	De Brey
3,678,882	A		7/1972	Kinsella
3,690,559	A		9/1972	Rudloff
3,744,586	A		7/1973	Leinauer
3,756,667	A		9/1973	Bombardier et al.
3,809,004	A		5/1974	Leonheart
3,816,004	A		6/1974	Bignardi
3,845,831	A		11/1974	James
RE28,268	E		12/1974	Autrand
3,851,349	A		12/1974	Lowder
3,853,086	A		12/1974	Asplund
3,863,285	A		2/1975	Hukuba
3,888,181	A		6/1975	Kups
3,937,174	A		2/1976	Haaga
3,952,361	A		4/1976	Wilkins
3,989,311	A		11/1976	De Brey
3,989,931	A		11/1976	Phillips
4,004,313	A		1/1977	Capra
4,012,681	A		3/1977	Finger et al.
4,070,170	A		1/1978	Leinfelt
4,099,284	A		7/1978	Shinozaki et al.
4,119,900	A		10/1978	Kremnitz
4,175,589	A		11/1979	Nakamura et al.
4,175,892	A		11/1979	De Brey
4,196,727	A		4/1980	Verkaart et al.
4,198,727	A		4/1980	Farmer
4,199,838	A		4/1980	Simonsson
D258,901	S		4/1981	Keyworth
4,297,578	A		10/1981	Carter
4,305,234	A		12/1981	Pichelman
4,306,329	A		12/1981	Yokoi
4,309,758	A		1/1982	Halsall et al.
4,369,543	A		1/1983	Chen et al.
4,401,909	A		8/1983	Gorsek
4,416,033	A		11/1983	Specht
4,445,245	A		5/1984	Lu
4,465,370	A		8/1984	Yuasa et al.
4,477,998	A		10/1984	You
4,481,692	A		11/1984	Kurz
4,482,960	A		11/1984	Pryor
4,492,058	A		1/1985	Goldfarb et al.
4,513,469	A		4/1985	Godfrey et al.
D278,732	S		5/1985	Ohkado
4,518,437	A		5/1985	Sommer
4,556,313	A		12/1985	Miller et al.
4,580,311	A		4/1986	Kurz
4,601,082	A		7/1986	Kurz
4,618,213	A		10/1986	Chen
4,620,285	A		10/1986	Perdue
4,624,026	A		11/1986	Olson et al.
4,626,995	A		12/1986	Lofgren et al.
4,628,454	A		12/1986	Ito
4,644,156	A		2/1987	Takahashi et al.
4,654,492	A		3/1987	Koerner et al.
4,654,924	A		4/1987	Getz et al.
4,662,854	A		5/1987	Fang
4,674,048	A		6/1987	Okumura
4,679,152	A		7/1987	Perdue
4,680,827	A		7/1987	Hummel
4,696,074	A		9/1987	Cavalli et al.
D292,223	S		10/1987	Trumbull
4,700,301	A		10/1987	Dyke
4,700,427	A		10/1987	Knepper
4,703,820	A		11/1987	Reinaud
4,709,771	A	*	12/1987	Basham et al. 180/6.5
4,709,773	A		12/1987	Clement
4,710,020	A		12/1987	Maddox et al.
4,712,740	A		12/1987	Duncan et al.
4,716,621	A		1/1988	Zoni
4,728,801	A		3/1988	O'Connor
4,733,343	A		3/1988	Yoneda et al.
4,733,430	A		3/1988	Westergren
4,733,431	A		3/1988	Martin
4,735,136	A		4/1988	Lee et al.
4,735,138	A		4/1988	Gawler et al.
4,748,336	A		5/1988	Fujie et al.
4,748,833	A		6/1988	Nagasawa
4,756,049	A		7/1988	Uehara
4,767,213	A		8/1988	Hummel
4,769,700	A		9/1988	Pryor
4,777,416	A		10/1988	George, II et al.
D298,766	S		11/1988	Tanno et al.
4,782,550	A		11/1988	Jacobs
4,796,198	A		1/1989	Boultinghouse et al.

(56) **References Cited**

U.S. PATENT DOCUMENTS

4,806,751 A 2/1989 Abe et al.
4,811,228 A 3/1989 Hyyppa
4,813,906 A 3/1989 Matsuyama et al.
4,815,157 A 3/1989 Tsuchiya
4,818,875 A 4/1989 Weiner
4,829,442 A 5/1989 Kadonoff et al.
4,829,626 A 5/1989 Harkonen et al.
4,832,098 A 5/1989 Palinkas et al.
4,851,661 A 7/1989 Everett
4,854,000 A 8/1989 Takimoto
4,854,006 A 8/1989 Nishimura et al.
4,855,915 A 8/1989 Dallaire
4,857,912 A 8/1989 Everett et al.
4,880,474 A 11/1989 Koharagi et al.
4,887,415 A 12/1989 Martin
4,893,025 A 1/1990 Lee
4,901,394 A 2/1990 Nakamura et al.
4,909,972 A 3/1990 Britz
4,912,643 A 3/1990 Beirne
4,918,441 A 4/1990 Bohman
4,919,224 A 4/1990 Shyu et al.
4,919,489 A 4/1990 Kopsco
4,920,060 A 4/1990 Parrent et al.
4,920,605 A 5/1990 Takashima
4,933,864 A 6/1990 Evans et al.
4,937,912 A 7/1990 Kurz
4,953,253 A 9/1990 Fukuda et al.
4,956,891 A 9/1990 Wulff
4,961,303 A 10/1990 McCarty et al.
4,961,304 A 10/1990 Ovsborn et al.
4,962,453 A 10/1990 Pong et al.
4,967,862 A 11/1990 Pong et al.
4,971,591 A 11/1990 Raviv et al.
4,973,912 A 11/1990 Kaminski et al.
4,974,283 A 12/1990 Holsten et al.
4,977,639 A 12/1990 Takahashi et al.
4,986,663 A 1/1991 Cecchi et al.
5,001,635 A 3/1991 Yasutomi et al.
5,002,145 A 3/1991 Waqkaumi et al.
5,012,886 A 5/1991 Jonas et al.
5,018,240 A 5/1991 Holman
5,020,186 A 6/1991 Lessig et al.
5,022,812 A 6/1991 Coughlan et al.
5,023,788 A 6/1991 Kitazume et al.
D318,500 S 7/1991 Malewicki et al.
5,032,775 A 7/1991 Mizuno et al.
5,033,151 A 7/1991 Kraft et al.
5,033,291 A 7/1991 Podoloff et al.
5,045,769 A 9/1991 Everett
5,049,802 A 9/1991 Mintus et al.
5,051,906 A 9/1991 Evans et al.
5,062,819 A 11/1991 Mallory
5,070,567 A 12/1991 Holland
5,084,934 A 2/1992 Lessig et al.
5,086,535 A * 2/1992 Grossmeyer et al. 15/319
5,090,321 A 2/1992 Abouav
5,093,955 A 3/1992 Blehert et al.
5,094,311 A 3/1992 Akeel
5,098,262 A 3/1992 Wecker et al.
5,105,502 A 4/1992 Takashima
5,105,550 A 4/1992 Shenoha
5,109,566 A 5/1992 Kobayashi et al.
5,115,538 A 5/1992 Cochran et al.
5,127,128 A 7/1992 Lee et al.
5,136,675 A 8/1992 Hodson
5,136,750 A 8/1992 Takashima et al.
5,142,985 A 9/1992 Stearns et al.
5,144,471 A 9/1992 Takanashi et al.
5,144,714 A 9/1992 Mori et al.
5,144,715 A 9/1992 Matsuyo et al.
5,152,028 A 10/1992 Hirano
5,152,202 A 10/1992 Strauss
5,163,202 A 11/1992 Kawakami et al.
5,163,320 A 11/1992 Goshima et al.
5,165,064 A 11/1992 Mattaboni
5,170,352 A 12/1992 McTamaney et al.
5,173,881 A 12/1992 Sindle
5,182,833 A 2/1993 Yamaguhi et al.
5,202,742 A 4/1993 Frank et al.
5,204,814 A 4/1993 Noonan et al.
5,206,500 A 4/1993 Decker et al.
5,208,521 A 5/1993 Aoyama
5,216,777 A 6/1993 Moro et al.
5,222,786 A 6/1993 Sovis et al.
5,233,682 A 8/1993 Abe et al.
5,239,720 A 8/1993 Wood et al.
5,251,358 A 10/1993 Moro et al.
5,261,139 A 11/1993 Lewis
5,276,618 A 1/1994 Everett
5,276,939 A 1/1994 Uenishi
5,277,064 A 1/1994 Knigga et al.
5,279,672 A * 1/1994 Betker et al. 134/18
5,284,452 A 2/1994 Corona
5,284,522 A 2/1994 Kobayashi et al.
5,293,955 A 3/1994 Lee
D345,707 S 4/1994 Alister
5,303,448 A 4/1994 Hennessey et al.
5,307,273 A 4/1994 Oh et al.
5,309,592 A 5/1994 Hiratsuka
5,310,379 A 5/1994 Hippely et al.
5,315,227 A 5/1994 Pierson et al.
5,319,827 A 6/1994 Yang
5,319,828 A 6/1994 Waldhauser et al.
5,321,614 A 6/1994 Ashworth
5,323,483 A 6/1994 Baeg
5,324,948 A 6/1994 Dudar et al.
5,331,713 A 7/1994 Tipton
5,341,540 A * 8/1994 Soupert et al. 15/319
5,341,549 A 8/1994 Wirtz et al.
5,345,649 A 9/1994 Whitlow
5,353,224 A 10/1994 Lee et al.
5,363,305 A 11/1994 Cox et al.
5,363,935 A 11/1994 Schempf et al.
5,369,347 A 11/1994 Yoo
5,369,838 A 12/1994 Wood et al.
5,386,862 A 2/1995 Glover et al.
5,399,951 A 3/1995 Lavallee et al.
5,400,244 A 3/1995 Watanabe et al.
5,404,612 A 4/1995 Ishikawa
5,410,479 A 4/1995 Coker
5,435,405 A 7/1995 Schempf et al.
5,440,216 A 8/1995 Kim
5,442,358 A 8/1995 Keeler et al.
5,444,965 A 8/1995 Colens
5,446,356 A 8/1995 Kim
5,446,445 A 8/1995 Bloomfield et al.
5,451,135 A 9/1995 Schempf et al.
5,454,129 A 10/1995 Kell
5,455,982 A 10/1995 Armstrong et al.
5,465,525 A 11/1995 Mifune et al.
5,465,619 A 11/1995 Sotack et al.
5,467,273 A 11/1995 Faibish et al.
5,471,560 A 11/1995 Allard et al.
5,491,670 A 2/1996 Weber
5,497,529 A 3/1996 Boesi
5,498,948 A 3/1996 Bruni et al.
5,502,638 A 3/1996 Takenaka
5,505,072 A 4/1996 Oreper
5,507,067 A 4/1996 Hoekstra et al.
5,511,147 A 4/1996 Abdel
5,515,572 A 5/1996 Hoekstra et al.
5,534,762 A 7/1996 Kim
5,535,476 A 7/1996 Kresse et al.
5,537,017 A 7/1996 Feiten et al.
5,537,711 A 7/1996 Tseng
5,539,953 A 7/1996 Kurz
5,542,146 A 8/1996 Hoekstra et al.
5,542,148 A 8/1996 Young
5,546,631 A 8/1996 Chambon
5,548,511 A 8/1996 Bancroft
5,551,525 A 9/1996 Pack et al.
5,553,349 A 9/1996 Kilstrom et al.
5,555,587 A 9/1996 Guha
5,560,077 A 10/1996 Crotchett

(56) **References Cited**

U.S. PATENT DOCUMENTS

5,568,589 A 10/1996 Hwang
D375,592 S 11/1996 Ljunggren
5,608,306 A 3/1997 Rybeck et al.
5,608,894 A 3/1997 Kawakami et al.
5,608,944 A 3/1997 Gordon
5,610,488 A 3/1997 Miyazawa
5,611,106 A 3/1997 Wulff
5,611,108 A 3/1997 Knowlton et al.
5,613,261 A 3/1997 Kawakami et al.
5,613,269 A 3/1997 Miwa
5,621,291 A 4/1997 Lee
5,622,236 A 4/1997 Azumi et al.
5,634,237 A 6/1997 Paranjpe
5,634,239 A 6/1997 Tuvin et al.
5,636,402 A 6/1997 Kubo et al.
5,642,299 A 6/1997 Hardin et al.
5,646,494 A 7/1997 Han
5,647,554 A 7/1997 Ikegami et al.
5,650,702 A 7/1997 Azumi
5,652,489 A 7/1997 Kawakami
5,682,313 A 10/1997 Edlund et al.
5,682,839 A 11/1997 Grimsley et al.
5,696,675 A 12/1997 Nakamura et al.
5,709,007 A 1/1998 Chiang
5,710,506 A 1/1998 Broell et al.
5,714,119 A 2/1998 Kawagoe et al.
5,717,169 A 2/1998 Liang et al.
5,717,484 A 2/1998 Hamaguchi et al.
5,720,077 A 2/1998 Nakamura et al.
5,732,401 A 3/1998 Conway
5,735,017 A 4/1998 Barnes et al.
5,735,959 A 4/1998 Kubo et al.
5,742,975 A 4/1998 Knowlton et al.
5,752,871 A 5/1998 Tsuzuki
5,756,904 A 5/1998 Oreper et al.
5,761,762 A 6/1998 Kubo et al.
5,764,888 A 6/1998 Bolan et al.
5,767,437 A 6/1998 Rogers
5,777,596 A 7/1998 Herbert
5,778,486 A 7/1998 Kim
5,781,697 A 7/1998 Jeong
5,781,960 A 7/1998 Kilstrom et al.
5,784,755 A 7/1998 Karr et al.
5,787,545 A 8/1998 Colens
5,793,900 A 8/1998 Nourbakhsh et al.
5,794,297 A 8/1998 Muta
5,802,665 A 9/1998 Knowlton et al.
5,812,267 A 9/1998 Everett, Jr. et al.
5,815,880 A * 10/1998 Nakanishi 15/319
5,815,884 A 10/1998 Imamura et al.
5,819,008 A 10/1998 Asama et al.
5,819,360 A 10/1998 Fujii et al.
5,819,936 A 10/1998 Saveliev et al.
5,820,821 A 10/1998 Kawagoe et al.
5,821,730 A 10/1998 Drapkin
5,825,981 A 10/1998 Matsuda
5,831,597 A 11/1998 West et al.
5,836,045 A 11/1998 Anthony et al.
5,839,156 A 11/1998 Park et al.
5,839,532 A 11/1998 Yoshiji et al.
5,841,259 A 11/1998 Kim et al.
5,867,800 A 2/1999 Leif
5,869,910 A 2/1999 Colens
5,894,621 A * 4/1999 Kubo 15/50.1
5,896,611 A 4/1999 Haaga
5,903,124 A 5/1999 Kawakami
5,905,209 A 5/1999 Oreper
5,907,886 A 6/1999 Buscher
5,910,700 A 6/1999 Crotzer
5,911,260 A 6/1999 Suzuki
5,916,008 A 6/1999 Wong
5,924,167 A 7/1999 Wright et al.
5,926,909 A 7/1999 McGee
5,933,102 A 8/1999 Miller et al.
5,933,913 A 8/1999 Wright et al.
5,935,179 A 8/1999 Kleiner et al.
5,935,333 A 8/1999 Davis
5,940,346 A 8/1999 Sadowsky et al.
5,940,927 A 8/1999 Haegermarck et al.
5,940,930 A 8/1999 Oh et al.
5,942,869 A 8/1999 Katou et al.
5,943,730 A 8/1999 Boomqaarden
5,943,733 A 8/1999 Tagliaferri et al.
5,947,225 A 9/1999 Kawakami et al.
5,950,408 A 9/1999 Schaedler
5,959,423 A 9/1999 Nakanishi et al.
5,959,424 A 9/1999 Elkmann et al.
5,968,281 A 10/1999 Wright et al.
5,974,348 A 10/1999 Rocks
5,983,448 A 11/1999 Wright et al.
5,984,880 A 11/1999 Lander et al.
5,987,383 A 11/1999 Keller et al.
5,989,700 A 11/1999 Krivopal
5,991,951 A 11/1999 Kubo et al.
5,995,883 A 11/1999 Nishikado
5,996,167 A 12/1999 Close
5,998,953 A * 12/1999 Nakamura et al. 318/587
5,998,971 A 12/1999 Corbridge
6,000,088 A 12/1999 Wright et al.
6,009,358 A 12/1999 Angott et al.
6,012,618 A 1/2000 Matsuo et al.
6,021,545 A 2/2000 Delgado et al.
6,023,813 A 2/2000 Thatcher et al.
6,023,814 A 2/2000 Imamura
6,025,687 A 2/2000 Himeda et al.
6,026,539 A 2/2000 Mouw et al.
6,030,464 A 2/2000 Azevedo
6,030,465 A 2/2000 Marcussen et al.
6,032,327 A 3/2000 Oka et al.
6,032,542 A 3/2000 Warnick et al.
6,036,572 A 3/2000 Sze
6,038,501 A 3/2000 Kawakami
6,040,669 A 3/2000 Hog
6,041,471 A 3/2000 Charky et al.
6,041,472 A 3/2000 Kasen et al.
6,049,620 A 4/2000 Dickinson et al.
6,050,648 A 4/2000 Keleny
6,052,821 A 4/2000 Chouly et al.
6,055,042 A 4/2000 Sarangapani
6,055,702 A 5/2000 Imamura et al.
6,061,868 A 5/2000 Moritsch et al.
6,065,182 A 5/2000 Wright et al.
6,070,290 A 6/2000 Schwarze et al.
6,073,432 A 6/2000 Schaedler
6,076,025 A 6/2000 Ueno et al.
6,076,026 A 6/2000 Jambhekar et al.
6,076,226 A 6/2000 Reed
6,076,227 A 6/2000 Schallig et al.
6,088,020 A 7/2000 Mor
6,094,775 A 8/2000 Behmer
6,099,091 A 8/2000 Campbell
6,101,670 A 8/2000 Song
6,101,671 A 8/2000 Wright et al.
6,108,031 A 8/2000 King et al.
6,108,067 A 8/2000 Okamoto
6,108,076 A 8/2000 Hanseder
6,108,269 A 8/2000 Kabel
6,108,859 A 8/2000 Burgoon
6,112,143 A 8/2000 Allen et al.
6,112,996 A 9/2000 Matsuo
6,119,057 A 9/2000 Kawagoe
6,122,798 A 9/2000 Kobayashi et al.
6,124,694 A * 9/2000 Bancroft et al. 318/587
6,125,498 A 10/2000 Roberts et al.
6,131,237 A 10/2000 Kasper et al.
6,138,063 A 10/2000 Himeda
6,142,252 A 11/2000 Kinto et al.
6,146,041 A 11/2000 Chen et al.
6,154,694 A 11/2000 Aoki et al.
6,167,332 A 12/2000 Kurtzberg et al.
6,167,587 B1 1/2001 Kasper et al.
6,192,548 B1 2/2001 Huffman
6,192,549 B1 2/2001 Kasen et al.
6,202,243 B1 3/2001 Beaufoy et al.

(56) **References Cited**

U.S. PATENT DOCUMENTS

6,216,307 B1 4/2001 Kaleta et al.
6,220,865 B1 4/2001 Macri et al.
6,226,830 B1 5/2001 Hendriks et al.
6,227,946 B1 5/2001 Gonzalez-Martin et al.
6,230,362 B1 5/2001 Kasper et al.
6,237,741 B1 5/2001 Guidetti
6,240,342 B1 5/2001 Fiegert et al.
6,243,913 B1 6/2001 Frank et al.
6,255,793 B1 7/2001 Peless et al.
6,259,979 B1 7/2001 Holmquist
6,261,379 B1 7/2001 Conrad et al.
6,263,539 B1 7/2001 Baig
6,263,989 B1 7/2001 Won
6,272,936 B1 8/2001 Oreper et al.
6,276,478 B1 8/2001 Hopkins et al.
6,278,918 B1 8/2001 Dickson et al.
6,279,196 B2 8/2001 Kasen et al.
6,282,526 B1 8/2001 Ganesh
6,283,034 B1 9/2001 Miles
6,285,930 B1 9/2001 Dickson et al.
6,286,181 B1 9/2001 Kasper et al.
6,300,737 B1 10/2001 Bergvall et al.
6,321,337 B1 11/2001 Reshef et al.
6,321,515 B1 11/2001 Colens
6,323,570 B1 11/2001 Nishimura et al.
6,324,714 B1 12/2001 Walz et al.
6,327,741 B1 12/2001 Reed
6,332,400 B1 12/2001 Meyer
6,339,735 B1 1/2002 Peless et al.
6,370,453 B2 4/2002 Sommer
6,374,155 B1 4/2002 Wallach et al.
6,374,157 B1 4/2002 Takamura
6,381,802 B2 5/2002 Park
6,385,515 B1 5/2002 Dickson et al.
6,388,013 B1 5/2002 Saraf et al.
6,389,329 B1 5/2002 Colens
6,397,429 B1 6/2002 Legatt et al.
6,400,048 B1 6/2002 Nishimura et al.
6,401,294 B2 6/2002 Kasper
6,408,226 B1 6/2002 Byrne et al.
6,412,141 B2 7/2002 Kasper et al.
6,415,203 B1 7/2002 Inoue et al.
6,418,586 B2 7/2002 Fulghum
6,421,870 B1 7/2002 Basham et al.
6,427,285 B1 8/2002 Leggatt et al.
6,430,471 B1 8/2002 Kintou et al.
6,431,296 B1 8/2002 Won
6,437,227 B1 8/2002 Theimer
6,437,465 B1 8/2002 Nishimura et al.
6,438,456 B1 8/2002 Feddema et al.
6,438,793 B1 8/2002 Miner et al.
6,442,476 B1 8/2002 Poropat
6,442,789 B1 9/2002 Legatt et al.
6,443,509 B1 9/2002 Levin et al.
6,444,003 B1 9/2002 Sutcliffe
6,446,302 B1 9/2002 Kasper et al.
6,454,036 B1 9/2002 Airey et al.
D464,091 S 10/2002 Christianson
6,457,206 B1 10/2002 Judson
6,459,955 B1 * 10/2002 Bartsch et al. 700/245
6,463,368 B1 10/2002 Feiten et al.
6,465,982 B1 10/2002 Bergvall et al.
6,480,762 B1 11/2002 Uchikubo et al.
6,481,515 B1 * 11/2002 Kirkpatrick et al. 180/65.1
6,490,539 B1 12/2002 Dickson et al.
6,491,127 B1 12/2002 Holmberg et al.
6,493,612 B1 12/2002 Bisset et al.
6,493,613 B2 12/2002 Peless et al.
6,496,754 B2 12/2002 Song et al.
6,496,755 B2 12/2002 Wallach et al.
6,502,657 B2 1/2003 Kerrebrock et al.
6,504,610 B1 1/2003 Bauer et al.
6,507,773 B2 1/2003 Parker et al.
6,519,808 B2 2/2003 Legatt et al.
6,525,509 B1 2/2003 Petersson et al.
D471,243 S 3/2003 Cioffi et al.
6,530,102 B1 3/2003 Pierce et al.
6,530,117 B2 3/2003 Peterson
6,532,404 B2 3/2003 Colens
6,535,793 B2 3/2003 Allard
6,540,424 B1 4/2003 Hall et al.
6,548,982 B1 4/2003 Papanikolopoulos et al.
6,553,612 B1 4/2003 Dyson et al.
6,556,892 B2 4/2003 Kuroki et al.
6,557,104 B2 4/2003 Vu et al.
D474,312 S 5/2003 Stephens et al.
6,571,415 B2 6/2003 Gerber et al.
6,571,422 B1 6/2003 Gordon et al.
6,572,711 B2 6/2003 Sclafani et al.
6,574,536 B1 6/2003 Kawagoe et al.
6,580,246 B2 6/2003 Jacobs
6,584,376 B1 6/2003 Kommer
6,586,908 B2 7/2003 Petersson et al.
6,590,222 B1 7/2003 Bisset et al.
6,594,551 B2 7/2003 McKinney, Jr. et al.
6,594,844 B2 7/2003 Jones
D478,884 S 8/2003 Slipy et al.
6,601,265 B1 8/2003 Burlington
6,604,021 B2 8/2003 Imai et al.
6,604,022 B2 8/2003 Parker et al.
6,605,156 B1 8/2003 Clark et al.
6,609,269 B2 8/2003 Kasper
6,611,120 B2 8/2003 Song et al.
6,611,734 B2 8/2003 Parker et al.
6,611,738 B2 8/2003 Ruffner
6,615,108 B1 9/2003 Peless et al.
6,615,434 B1 9/2003 Davis et al.
6,615,885 B1 9/2003 Ohm
6,622,465 B2 9/2003 Jerome et al.
6,624,744 B1 9/2003 Wilson et al.
6,625,843 B2 9/2003 Kim et al.
6,633,150 B1 10/2003 Wallach et al.
6,637,546 B1 10/2003 Wang
6,658,325 B2 12/2003 Zweig
6,658,354 B2 12/2003 Lin
6,658,692 B2 12/2003 Lenkiewicz et al.
6,658,693 B1 12/2003 Reed, Jr.
6,661,239 B1 12/2003 Ozick
6,662,889 B2 12/2003 De et al.
6,668,951 B2 12/2003 Won
6,670,817 B2 12/2003 Fournier et al.
6,671,592 B1 12/2003 Bisset et al.
6,671,925 B2 1/2004 Field et al.
6,687,571 B1 2/2004 Byrne et al.
6,690,134 B1 2/2004 Jones et al.
6,690,993 B2 2/2004 Foulke et al.
6,705,332 B2 3/2004 Field et al.
6,711,280 B2 3/2004 Stafsudd et al.
6,732,826 B2 5/2004 Song et al.
6,735,811 B2 5/2004 Field et al.
6,735,812 B2 5/2004 Hekman et al.
6,741,054 B2 5/2004 Koselka et al.
6,748,297 B2 6/2004 Song et al.
6,756,703 B2 6/2004 Chang
6,760,647 B2 7/2004 Nourbakhsh et al.
6,764,373 B1 7/2004 Osawa et al.
6,769,004 B2 7/2004 Barrett
6,774,596 B1 8/2004 Bisset
6,779,380 B1 8/2004 Nieuwkamp
6,781,338 B2 8/2004 Jones et al.
6,809,490 B2 10/2004 Jones et al.
6,810,305 B2 10/2004 Kirkpatrick, Jr.
6,810,350 B2 10/2004 Blakley
6,830,120 B1 12/2004 Yashima et al.
6,832,407 B2 12/2004 Salem et al.
6,836,701 B2 12/2004 McKee
6,841,963 B2 1/2005 Song et al.
6,845,297 B2 1/2005 Allard
6,848,146 B2 2/2005 Wright et al.
6,854,148 B1 2/2005 Rief et al.
6,856,811 B2 2/2005 Burdue et al.
6,859,010 B2 2/2005 Jeon et al.
6,859,682 B2 2/2005 Naka et al.
6,860,206 B1 3/2005 Rudakevych et al.

(56) **References Cited**

U.S. PATENT DOCUMENTS

6,865,447 B2 3/2005 Lau et al.
6,870,792 B2 3/2005 Chiappetta
6,871,115 B2 3/2005 Huang et al.
6,883,201 B2 4/2005 Jones et al.
6,886,651 B1 5/2005 Slocum et al.
6,888,333 B2 5/2005 Laby
6,901,624 B2 6/2005 Mori et al.
6,914,403 B2 7/2005 Tsurumi
6,925,357 B2 8/2005 Wang et al.
6,925,679 B2 8/2005 Wallach et al.
D510,066 S 9/2005 Hickey et al.
6,938,298 B2 9/2005 Aasen
6,940,291 B1 9/2005 Ozick
6,941,199 B1 * 9/2005 Bottomley et al. 701/23
6,956,348 B2 10/2005 Landry et al.
6,957,712 B2 10/2005 Song et al.
6,960,986 B2 11/2005 Asama et al.
6,965,209 B2 11/2005 Jones et al.
6,965,211 B2 11/2005 Tsurumi
6,968,592 B2 11/2005 Takeuchi et al.
6,971,140 B2 12/2005 Kim et al.
6,975,246 B1 12/2005 Trudeau
6,985,556 B2 1/2006 Shanmugavel et al.
6,993,954 B1 2/2006 George et al.
6,999,850 B2 2/2006 McDonald et al.
7,013,527 B2 3/2006 Thomas et al.
7,024,280 B2 4/2006 Parker et al.
7,027,893 B2 4/2006 Perry et al.
7,030,768 B2 4/2006 Wanie
7,031,805 B2 4/2006 Lee et al.
7,040,869 B2 5/2006 Beenker
7,051,399 B2 5/2006 Field et al.
7,053,578 B2 5/2006 Diehl et al.
7,054,716 B2 5/2006 McKee et al.
7,055,210 B2 6/2006 Keppler et al.
7,057,120 B2 6/2006 Ma et al.
7,057,643 B2 6/2006 Iida et al.
7,059,012 B2 6/2006 Song et al.
7,065,430 B2 6/2006 Naka et al.
7,066,291 B2 6/2006 Martins et al.
7,069,124 B1 6/2006 Whittaker et al.
7,079,923 B2 7/2006 Abramson et al.
7,085,623 B2 8/2006 Siegers
7,085,624 B2 8/2006 Aldred et al.
7,113,847 B2 9/2006 Chmura et al.
7,133,746 B2 11/2006 Abramson et al.
7,155,308 B2 12/2006 Jones
7,171,285 B2 1/2007 Kim et al.
7,173,391 B2 2/2007 Jones et al.
7,174,238 B1 2/2007 Zweig
7,188,000 B2 3/2007 Chiappetta et al.
7,193,384 B1 3/2007 Norman et al.
7,196,487 B2 3/2007 Jones et al.
7,201,786 B2 4/2007 Wegelin et al.
7,206,677 B2 4/2007 Huldén
7,211,980 B1 5/2007 Bruemmer et al.
7,225,500 B2 6/2007 Diehl et al.
7,246,405 B2 7/2007 Yan
7,248,951 B2 7/2007 Hulden
7,275,280 B2 10/2007 Haegermarck et al.
7,283,892 B1 10/2007 Boillot et al.
7,288,912 B2 10/2007 Landry et al.
7,318,248 B1 1/2008 Yan
7,320,149 B1 1/2008 Huffman et al.
7,321,807 B2 1/2008 Laski
7,324,870 B2 1/2008 Lee
7,328,196 B2 2/2008 Peters
7,346,428 B1 3/2008 Huffman et al.
7,352,153 B2 4/2008 Yan
7,359,766 B2 4/2008 Jeon et al.
7,360,277 B2 4/2008 Moshenrose et al.
7,363,108 B2 4/2008 Noda et al.
7,388,343 B2 * 6/2008 Jones et al. 318/587
7,388,879 B2 6/2008 Sabe et al.
7,389,156 B2 6/2008 Zieglet et al.
7,389,166 B2 6/2008 Harwig et al.
7,408,157 B2 8/2008 Yan
7,418,762 B2 9/2008 Arai et al.
7,430,455 B2 9/2008 Casey et al.
7,430,462 B2 9/2008 Chiu et al.
7,441,298 B2 10/2008 Svendsen et al.
7,444,206 B2 10/2008 Abramson et al.
7,448,113 B2 11/2008 Jones et al.
7,459,871 B2 12/2008 Landry et al.
7,467,026 B2 12/2008 Sakagami et al.
7,474,941 B2 1/2009 Kim et al.
7,503,096 B2 3/2009 Lin
7,515,991 B2 4/2009 Egawa et al.
7,539,557 B2 5/2009 Yamauchi
7,555,363 B2 6/2009 Augenbraum et al.
7,557,703 B2 7/2009 Yamada et al.
7,568,259 B2 8/2009 Yan
7,571,511 B2 8/2009 Jones et al.
7,578,020 B2 8/2009 Jaworski et al.
7,600,521 B2 10/2009 Woo
7,603,744 B2 10/2009 Reindle
7,611,583 B2 11/2009 Buckley et al.
7,617,557 B2 11/2009 Reindle
7,620,476 B2 11/2009 Morse et al.
7,636,982 B2 12/2009 Jones et al.
7,647,144 B2 1/2010 Haegermarck
7,650,666 B2 1/2010 Jang
7,660,650 B2 2/2010 Kawagoe et al.
7,693,605 B2 4/2010 Park
7,761,954 B2 * 7/2010 Ziegler et al. 15/320
7,765,635 B2 8/2010 Park
7,784,147 B2 8/2010 Burkholder et al.
7,801,645 B2 9/2010 Taylor et al.
7,805,220 B2 9/2010 Taylor et al.
7,809,944 B2 10/2010 Kawamoto
7,832,048 B2 11/2010 Harwig et al.
7,849,555 B2 12/2010 Hahm et al.
7,853,645 B2 12/2010 Brown et al.
7,920,941 B2 4/2011 Park et al.
7,937,800 B2 5/2011 Yan
7,957,836 B2 6/2011 Myeong et al.
8,392,021 B2 * 3/2013 Konandreas et al. 700/245
2001/0004719 A1 6/2001 Sommer
2001/0013434 A1 8/2001 Hopkins
2001/0020200 A1 9/2001 Das et al.
2001/0025183 A1 9/2001 Shahidi
2001/0037163 A1 11/2001 Allard
2001/0043509 A1 11/2001 Green et al.
2001/0045883 A1 11/2001 Holdaway et al.
2001/0047231 A1 11/2001 Peless et al.
2001/0047895 A1 12/2001 De Fazio et al.
2002/0011813 A1 1/2002 Koselka et al.
2002/0016649 A1 2/2002 Jones
2002/0021219 A1 2/2002 Edwards
2002/0081937 A1 6/2002 Yamada et al.
2002/0095239 A1 7/2002 Wallach et al.
2002/0097400 A1 7/2002 Jung et al.
2002/0108209 A1 8/2002 Peterson
2002/0112742 A1 8/2002 Bredo et al.
2002/0116089 A1 8/2002 Kirkpatrick
2002/0120364 A1 8/2002 Colens
2002/0124343 A1 9/2002 Reed
2002/0153185 A1 10/2002 Song et al.
2002/0156556 A1 10/2002 Ruffner
2002/0166193 A1 11/2002 Kasper
2002/0169521 A1 11/2002 Goodman et al.
2002/0173877 A1 11/2002 Zweig
2002/0189871 A1 12/2002 Won
2003/0009259 A1 1/2003 Hattori et al.
2003/0015232 A1 1/2003 Nguyen
2003/0019071 A1 1/2003 Field et al.
2003/0023356 A1 1/2003 Keable
2003/0025472 A1 * 2/2003 Jones et al. 318/568.12
2003/0028286 A1 2/2003 Glenn et al.
2003/0030399 A1 2/2003 Jacobs
2003/0060928 A1 3/2003 Abramson et al.
2003/0067451 A1 4/2003 Tagg et al.
2003/0097875 A1 5/2003 Lentz et al.
2003/0108395 A1 6/2003 Douglas et al.

(56) **References Cited**

U.S. PATENT DOCUMENTS

2003/0120389 A1 6/2003 Abramson et al.
2003/0124312 A1 7/2003 Autumn
2003/0126352 A1 7/2003 Barrett
2003/0137268 A1 7/2003 Papanikolopoulos et al.
2003/0159232 A1 8/2003 Hekman et al.
2003/0168081 A1 9/2003 Lee et al.
2003/0175138 A1 9/2003 Beenker
2003/0192144 A1 10/2003 Song et al.
2003/0216834 A1 11/2003 Allard
2003/0221114 A1 11/2003 Hino et al.
2003/0229421 A1 12/2003 Chmura et al.
2003/0229474 A1 12/2003 Suzuki et al.
2003/0233171 A1 12/2003 Heiligensetzer
2003/0233177 A1 12/2003 Johnson et al.
2003/0233930 A1 12/2003 Ozick
2004/0016077 A1 1/2004 Song et al.
2004/0020000 A1 2/2004 Jones
2004/0030448 A1 2/2004 Solomon
2004/0030449 A1 2/2004 Solomon
2004/0030450 A1 2/2004 Solomon
2004/0030451 A1 2/2004 Solomon
2004/0030570 A1 2/2004 Solomon
2004/0030571 A1 2/2004 Solomon
2004/0031113 A1 2/2004 Wosewick et al.
2004/0049877 A1 3/2004 Jones et al.
2004/0049878 A1* 3/2004 Thomas et al. 15/320
2004/0055163 A1 3/2004 McCambridge et al.
2004/0068351 A1 4/2004 Solomon
2004/0068415 A1 4/2004 Solomon
2004/0068416 A1 4/2004 Solomon
2004/0074038 A1 4/2004 Im et al.
2004/0074044 A1 4/2004 Diehl et al.
2004/0076324 A1 4/2004 Burl et al.
2004/0083570 A1 5/2004 Song et al.
2004/0085037 A1 5/2004 Jones et al.
2004/0088079 A1 5/2004 Lavarec et al.
2004/0093122 A1 5/2004 Galibraith
2004/0098167 A1 5/2004 Yi et al.
2004/0111184 A1 6/2004 Chiappetta et al.
2004/0111821 A1 6/2004 Lenkiewicz et al.
2004/0113777 A1 6/2004 Matsuhira et al.
2004/0117064 A1 6/2004 McDonald
2004/0117846 A1 6/2004 Karaoguz et al.
2004/0118998 A1 6/2004 Wingett et al.
2004/0128028 A1 7/2004 Miyamoto et al.
2004/0133316 A1 7/2004 Dean
2004/0134336 A1 7/2004 Solomon
2004/0134337 A1 7/2004 Solomon
2004/0143919 A1 7/2004 Wilder
2004/0148419 A1 7/2004 Chen et al.
2004/0148731 A1 8/2004 Damman et al.
2004/0153212 A1 8/2004 Profio et al.
2004/0156541 A1 8/2004 Jeon et al.
2004/0158357 A1 8/2004 Lee et al.
2004/0181706 A1 9/2004 Chen et al.
2004/0187249 A1 9/2004 Jones et al.
2004/0187457 A1 9/2004 Colens
2004/0200505 A1 10/2004 Taylor et al.
2004/0204792 A1 10/2004 Taylor et al.
2004/0207355 A1* 10/2004 Jones et al. 318/568.12
2004/0210345 A1 10/2004 Noda et al.
2004/0210347 A1 10/2004 Sawada et al.
2004/0211444 A1 10/2004 Taylor et al.
2004/0221790 A1 11/2004 Sinclair et al.
2004/0236468 A1 11/2004 Taylor et al.
2004/0244138 A1 12/2004 Taylor et al.
2004/0255425 A1 12/2004 Arai et al.
2005/0000543 A1 1/2005 Taylor et al.
2005/0010330 A1 1/2005 Abramson et al.
2005/0010331 A1 1/2005 Taylor et al.
2005/0015915 A1* 1/2005 Thomas et al. 15/320
2005/0021181 A1 1/2005 Kim et al.
2005/0028316 A1 2/2005 Thomas et al.
2005/0029029 A1 2/2005 Thorne
2005/0053912 A1 3/2005 Roth et al.
2005/0055796 A1 3/2005 Wright et al.
2005/0067994 A1 3/2005 Jones et al.
2005/0081782 A1 4/2005 Buckely et al.
2005/0085947 A1 4/2005 Aldred et al.
2005/0091782 A1 5/2005 Gordon et al.
2005/0091786 A1 5/2005 Wright et al.
2005/0137749 A1 6/2005 Jeon et al.
2005/0144751 A1 7/2005 Kegg et al.
2005/0150074 A1 7/2005 Diehl et al.
2005/0150519 A1 7/2005 Keppler et al.
2005/0154795 A1 7/2005 Kuz et al.
2005/0156562 A1 7/2005 Cohen et al.
2005/0165508 A1 7/2005 Kanda et al.
2005/0166354 A1 8/2005 Uehigashi
2005/0166355 A1 8/2005 Tani
2005/0172445 A1 8/2005 Diehl et al.
2005/0183229 A1 8/2005 Uehigashi
2005/0183230 A1 8/2005 Uehigashi
2005/0187678 A1 8/2005 Myeong et al.
2005/0192707 A1 9/2005 Park et al.
2005/0204717 A1 9/2005 Colens
2005/0209736 A1 9/2005 Kawagoe
2005/0217042 A1 10/2005 Reindle
2005/0218852 A1 10/2005 Landry et al.
2005/0222933 A1 10/2005 Wesby
2005/0229340 A1 10/2005 Sawalski et al.
2005/0229355 A1 10/2005 Crouch et al.
2005/0235451 A1 10/2005 Yan
2005/0251292 A1 11/2005 Casey et al.
2005/0255425 A1 11/2005 Pierson
2005/0258154 A1 11/2005 Blankenship et al.
2005/0273967 A1 12/2005 Taylor et al.
2005/0288819 A1 12/2005 de Guzman
2006/0000050 A1 1/2006 Cipolla et al.
2006/0009879 A1 1/2006 Lynch et al.
2006/0010638 A1 1/2006 Shimizu et al.
2006/0020369 A1 1/2006 Taylor et al.
2006/0020370 A1 1/2006 Abramson
2006/0021168 A1 2/2006 Nishikawa
2006/0025134 A1 2/2006 Cho et al.
2006/0037170 A1 2/2006 Shimizu
2006/0042042 A1 3/2006 Mertes et al.
2006/0060216 A1 3/2006 Woo
2006/0061657 A1 3/2006 Rew et al.
2006/0064828 A1 3/2006 Stein et al.
2006/0087273 A1 4/2006 Ko et al.
2006/0089765 A1 4/2006 Pack et al.
2006/0100741 A1 5/2006 Jung
2006/0107894 A1 5/2006 Buckley et al.
2006/0143295 A1 6/2006 Costa et al.
2006/0146776 A1 7/2006 Kim
2006/0150361 A1 7/2006 Aldred et al.
2006/0184293 A1 8/2006 Konandreas et al.
2006/0185690 A1 8/2006 Song et al.
2006/0190133 A1 8/2006 Konandreas et al.
2006/0190146 A1 8/2006 Morse et al.
2006/0196003 A1 9/2006 Song et al.
2006/0200281 A1 9/2006 Ziegler et al.
2006/0220900 A1 10/2006 Ceskutti et al.
2006/0259194 A1 11/2006 Chiu
2006/0278161 A1 12/2006 Burkholder et al.
2006/0288519 A1 12/2006 Jaworski et al.
2006/0293787 A1 12/2006 Kanda et al.
2007/0006404 A1 1/2007 Cheng et al.
2007/0016328 A1 1/2007 Ziegler et al.
2007/0017061 A1 1/2007 Yan
2007/0028574 A1 2/2007 Yan
2007/0032904 A1 2/2007 Kawagoe
2007/0042716 A1 2/2007 Goodall et al.
2007/0043459 A1 2/2007 Abbott et al.
2007/0114975 A1 5/2007 Cohen et al.
2007/0142964 A1 6/2007 Abramson
2007/0150096 A1 6/2007 Yeh et al.
2007/0156286 A1 7/2007 Yamauchi
2007/0157415 A1 7/2007 Lee et al.
2007/0157420 A1 7/2007 Lee et al.
2007/0179670 A1 8/2007 Chiappetta et al.
2007/0226949 A1 10/2007 Hahm et al.
2007/0234492 A1 10/2007 Svendsen et al.

(56) **References Cited**

U.S. PATENT DOCUMENTS

2007/0244610	A1	10/2007	Ozick et al.
2007/0250212	A1	10/2007	Halloran et al.
2007/0261193	A1	11/2007	Gordon et al.
2007/0266508	A1	11/2007	Jones et al.
2008/0007203	A1	1/2008	Cohen et al.
2008/0039974	A1	2/2008	Sandin et al.
2008/0052846	A1	3/2008	Kapoor et al.
2008/0109126	A1	5/2008	Sandin et al.
2008/0134458	A1	6/2008	Ziegler et al.
2008/0140255	A1	6/2008	Ziegler et al.
2008/0155768	A1	7/2008	Ziegler et al.
2008/0184518	A1	8/2008	Taylor et al.
2008/0276407	A1	11/2008	Schnittman et al.
2008/0282494	A1	11/2008	Won et al.
2008/0302586	A1	12/2008	Yan
2008/0307590	A1	12/2008	Jones et al.
2009/0007366	A1	1/2009	Svendsen et al.
2009/0038089	A1	2/2009	Landry et al.
2009/0049640	A1	2/2009	Lee et al.
2009/0055022	A1	2/2009	Casey et al.
2009/0292393	A1	11/2009	Casey et al.
2010/0006028	A1	1/2010	Buckley et al.
2010/0011529	A1	1/2010	Won et al.
2010/0049365	A1	2/2010	Jones et al.
2010/0063628	A1	3/2010	Landry et al.
2010/0107355	A1	5/2010	Won et al.
2010/0257690	A1	10/2010	Jones et al.
2010/0257691	A1	10/2010	Jones et al.
2010/0263158	A1	10/2010	Jones et al.
2010/0268384	A1	10/2010	Jones et al.
2010/0312429	A1	12/2010	Jones et al.

FOREIGN PATENT DOCUMENTS

DE	3317376	A1	11/1984
DE	3536907	C2	2/1989
DE	3404202	C2	12/1992
DE	199311014	U1	10/1993
DE	4414683	A1	10/1995
DE	4338841	C2	8/1999
DE	19849978		2/2001
DE	19849978	C2	2/2001
DE	10242257	A1	4/2003
DE	102004038074		6/2005
DE	10357636	A1	7/2005
DE	102004041021	B3	8/2005
DE	102005046813	A1	4/2007
DK	198803389	A	12/1988
EP	265542	A1	5/1988
EP	281085	A2	9/1988
EP	0286328		10/1988
EP	0352045		1/1990
EP	307381	A3	7/1990
EP	0389459		9/1990
EP	358628	A3	5/1991
EP	437024	A1	7/1991
EP	433697	A3	12/1992
EP	479273	A3	5/1993
EP	294101	B1	12/1993
EP	554978	A3	3/1994
EP	0 615 719		9/1994
EP	615719	A1	9/1994
EP	0 792 726		9/1997
EP	861629	A1	9/1998
EP	930040	A3	10/1999
EP	845237	B1	4/2000
EP	1018315	A1	7/2000
EP	1172719	A1	1/2002
EP	1228734	A3	6/2003
EP	1 331 537		7/2003
EP	1 380 245		1/2004
EP	1380245	A1	1/2004
EP	1380246	A2	1/2004
EP	1380246	A3	3/2005
EP	1 557 730		7/2005
EP	1553472	A1	7/2005
EP	1557730	A1	7/2005
EP	1642522	A2	4/2006
EP	1642522	A3	11/2007
ES	2238196	B1	11/2006
FR	722 755		3/1932
FR	2601443	B1	11/1991
FR	2 828 589		8/2001
GB	702426	A	1/1954
GB	2128842	B	4/1986
GB	2213047	A	8/1989
GB	2225221	A	5/1990
GB	2 283 838		5/1995
GB	2284957	A	6/1995
GB	2267360	B	12/1995
GB	2300082	B	9/1999
GB	2 344 747		6/2000
GB	2404330	B	7/2005
GB	2417354	A	2/2006
JP	53021869		2/1978
JP	53110257	A	9/1978
JP	53110257	A2	9/1978
JP	57014726	A2	1/1982
JP	57064217	A	4/1982
JP	59005315	B	2/1984
JP	59033511	U	3/1984
JP	59094005	A	5/1984
JP	59099308	A	6/1984
JP	59112311	A	6/1984
JP	59120124	A	7/1984
JP	59033511	B	8/1984
JP	59131668	U	9/1984
JP	59164973	A	9/1984
JP	59184917	A	10/1984
JP	2283343	A2	11/1984
JP	59212924	A	12/1984
JP	59226909	A	12/1984
JP	60089213		5/1985
JP	60211510	A	10/1985
JP	60259895	A	12/1985
JP	61023221	A2	1/1986
JP	61097712	A	5/1986
JP	61023221	B	6/1986
JP	61-160366		7/1986
JP	62070709	A	4/1987
JP	62074018	A	4/1987
JP	62-120510		6/1987
JP	62-154008		7/1987
JP	62164431	A	7/1987
JP	62263507	A	11/1987
JP	62263508	A	11/1987
JP	62189057	U	12/1987
JP	63079623	A	4/1988
JP	63-183032		7/1988
JP	63158032	A	7/1988
JP	63-203483		8/1988
JP	63-241610		10/1988
JP	1162454	A	6/1989
JP	HEI01-118752		8/1989
JP	2-6312		1/1990
JP	2006312	U1	1/1990
JP	2026312	B	6/1990
JP	2283343	A	11/1990
JP	03 051023		3/1991
JP	3051023	A2	3/1991
JP	3197758	A	8/1991
JP	3201903	A	9/1991
JP	4019586	B	3/1992
JP	4084921	A	3/1992
JP	5042076	A	2/1993
JP	5046246	A	2/1993
JP	5023269	B	4/1993
JP	5091604	A2	4/1993
JP	5150827	A	6/1993
JP	5150829	A	6/1993
JP	5046239	B	7/1993
JP	5054620	U	7/1993
JP	5040519	Y2	10/1993

(56) **References Cited**

FOREIGN PATENT DOCUMENTS

JP	5257527	A	10/1993
JP	5257533	A	10/1993
JP	5285861	A	11/1993
JP	6-3251		1/1994
JP	6003251	U	1/1994
JP	06-038912		2/1994
JP	6105781	A	4/1994
JP	6137828	A	5/1994
JP	6293095	A	10/1994
JP	06-327598		11/1994
JP	7059702	A2	3/1995
JP	07-129239		5/1995
JP	7222705	A	8/1995
JP	7222705	A2	8/1995
JP	7-281752		10/1995
JP	7270518	A	10/1995
JP	7281742	A2	10/1995
JP	7281752	A	10/1995
JP	7-295636		11/1995
JP	7311041	A2	11/1995
JP	7313417	A	12/1995
JP	7319542	A2	12/1995
JP	8-16776		1/1996
JP	8000393	B2	1/1996
JP	8000393	Y2	1/1996
JP	8016241	A2	1/1996
JP	8016776	B2	2/1996
JP	8063229	A2	3/1996
JP	8083125	A	3/1996
JP	8083125	A2	3/1996
JP	08-089451		4/1996
JP	8089449	A	4/1996
JP	2520732	B2	5/1996
JP	8123548	A	5/1996
JP	08-152916		6/1996
JP	8152916	A2	6/1996
JP	2555263		8/1996
JP	8256960	A2	10/1996
JP	8263137	A	10/1996
JP	8286741	A2	11/1996
JP	8286744	A2	11/1996
JP	8322774	A	12/1996
JP	8322774	A2	12/1996
JP	8335112	A	12/1996
JP	9-43901		2/1997
JP	9043901	A	2/1997
JP	9044240	A	2/1997
JP	9047413	A	2/1997
JP	9066855	A	3/1997
JP	9145309	A	6/1997
JP	9160644	A	6/1997
JP	9160644	A2	6/1997
JP	8-393		7/1997
JP	9-179625		7/1997
JP	9179625	A2	7/1997
JP	9179685	A2	7/1997
JP	9185410	A	7/1997
JP	9192069	A2	7/1997
JP	HEI 9-192069		7/1997
JP	2555263	Y2	8/1997
JP	9204223	A2	8/1997
JP	9206258	A	8/1997
JP	9206258	A2	8/1997
JP	9233712	A	9/1997
JP	09251318		9/1997
JP	9251318	A	9/1997
JP	9265319	A	10/1997
JP	9269807	A	10/1997
JP	9269810	A	10/1997
JP	9319431	A	12/1997
JP	9319431	A2	12/1997
JP	9319432	A	12/1997
JP	9319434	A	12/1997
JP	9325812	A	12/1997
JP	10055215	A	2/1998
JP	10117973	A	5/1998
JP	10117973	A2	5/1998
JP	10118963	A	5/1998
JP	10177414	A	6/1998
JP	10214114	A	8/1998
JP	10214114	A2	8/1998
JP	10228316		8/1998
JP	10240342	A2	9/1998
JP	10260727	A2	9/1998
JP	10295595	A	11/1998
JP	10-314088		12/1998
JP	11015941	A	1/1999
JP	11065655	A2	3/1999
JP	11085269	A2	3/1999
JP	11102219	A2	4/1999
JP	11102220	A	4/1999
JP	11162454	A	6/1999
JP	11174145	A	7/1999
JP	11175149	A	7/1999
JP	11178764	A	7/1999
JP	11178765	A	7/1999
JP	11-508810		8/1999
JP	11212642	A	8/1999
JP	11212642	A2	8/1999
JP	11213157	A	8/1999
JP	11-510935		9/1999
JP	11248806	A	9/1999
JP	11282532	A	10/1999
JP	11282533	A	10/1999
JP	11295412	A	10/1999
JP	11346964	A2	12/1999
JP	HEI11-346964		12/1999
JP	2000047728	A	2/2000
JP	2000056006		2/2000
JP	2000056006	A	2/2000
JP	2000056831		2/2000
JP	2000056831	A	2/2000
JP	2000066722		3/2000
JP	2000066722	A	3/2000
JP	2000075925		3/2000
JP	2000075925	A	3/2000
JP	10240343	A2	5/2000
JP	20000275321	A	10/2000
JP	11-162454		12/2000
JP	2000353014	A	12/2000
JP	2000353014	A2	12/2000
JP	200122443		1/2001
JP	2001022443	A	1/2001
JP	2001067588	A	3/2001
JP	2001087182		4/2001
JP	2001087182	A	4/2001
JP	2001121455	A	5/2001
JP	2001125641	A	5/2001
JP	2001216482	A	8/2001
JP	2001-258807		9/2001
JP	2001265437		9/2001
JP	2001265437	A	9/2001
JP	2001-275908		10/2001
JP	2001289939	A	10/2001
JP	2001306170	A	11/2001
JP	2001320781	A	11/2001
JP	2001-525567		12/2001
JP	2002-78650		3/2002
JP	2002-204768		7/2002
JP	2002204769	A	7/2002
JP	2002247510	A	8/2002
JP	2002-532178		10/2002
JP	3356170		10/2002
JP	2002-323925		11/2002
JP	3375843		11/2002
JP	2002333920		11/2002
JP	2002333920	A	11/2002
JP	2002-355206		12/2002
JP	2002-360471		12/2002
JP	2002-360482		12/2002
JP	2002-369778		12/2002
JP	2002360479	A	12/2002
JP	2002366227	A	12/2002
JP	2002369778	A	12/2002

(56) **References Cited**

FOREIGN PATENT DOCUMENTS

JP	2002369778	A2	12/2002
JP	2003-005296		1/2003
JP	2003-10076		1/2003
JP	2003010076		1/2003
JP	2003010076	A	1/2003
JP	2003010088		1/2003
JP	2003010088	A	1/2003
JP	2003015740		1/2003
JP	2003015740	A	1/2003
JP	2003028528	A	1/2003
JP	2003-5296		2/2003
JP	2003-036116		2/2003
JP	2003-38401		2/2003
JP	2003-38402		2/2003
JP	2003-052596		2/2003
JP	2003-505127		2/2003
JP	2003047579	A	2/2003
JP	2003052596	A	2/2003
JP	2003-061882		3/2003
JP	2003061882		3/2003
JP	2003084994	A	3/2003
JP	2003167628		6/2003
JP	2003167628	A	6/2003
JP	2003180586		7/2003
JP	2003180587	A	7/2003
JP	2003186539	A	7/2003
JP	2003190064	A	7/2003
JP	2003190064	A2	7/2003
JP	2003241836	A	8/2003
JP	2003262520		9/2003
JP	2003262520	A	9/2003
JP	2003285288	A	10/2003
JP	2003304992		10/2003
JP	2003304992	A	10/2003
JP	2003-310489		11/2003
JP	2003310509		11/2003
JP	2003310509	A	11/2003
JP	2003330543	A	11/2003
JP	2004123040		4/2004
JP	2004123040	A	4/2004
JP	2004148021		5/2004
JP	2004148021	A	5/2004
JP	2004-166968		6/2004
JP	2004160102		6/2004
JP	2004160102	A	6/2004
JP	2004166968	A	6/2004
JP	2004174228		6/2004
JP	2004174228	A	6/2004
JP	2004198330	A	7/2004
JP	2004219185	A	8/2004
JP	2004-351234		12/2004
JP	2005-040578		2/2005
JP	2005352707		2/2005
JP	2005118354	A	5/2005
JP	2005135400		5/2005
JP	2005135400	A	5/2005
JP	2005211360	A	8/2005
JP	2005224265	A	8/2005
JP	2005230032	A	9/2005
JP	2005245916		9/2005
JP	2005245916	A	9/2005
JP	2005296511	A	10/2005
JP	2005346700	A2	12/2005
JP	2005352707	A	12/2005
JP	2006043071		2/2006
JP	2006043071	A	2/2006
JP	2006155274		6/2006
JP	2006155274	A	6/2006
JP	2006164223	A	6/2006
JP	2006227673	A	8/2006
JP	2006247467		9/2006
JP	2006247467	A	9/2006
JP	2006260161		9/2006
JP	2006260161	A	9/2006
JP	2006293662		10/2006
JP	2006293662	A	10/2006
JP	2006296697		11/2006
JP	2006296697	A	11/2006
JP	2007034866		2/2007
JP	2007034866	A	2/2007
JP	2007213180		8/2007
JP	2007213180	A	8/2007
JP	04075285	B2	4/2008
JP	2009015611		1/2009
JP	2009015611	A	1/2009
JP	2010198552		9/2010
JP	2010198552	A	9/2010
WO	WO 95/26512		10/1995
WO	WO 95/30887		11/1995
WO	WO9530887	A1	11/1995
WO	WO9617258	A3	2/1997
WO	WO 97/15224		5/1997
WO	WO 97/40734		11/1997
WO	WO 97/41451		11/1997
WO	WO 98/53456		11/1998
WO	WO9905580	A2	2/1999
WO	WO 99/16078		4/1999
WO	WO 99/28800		6/1999
WO	WO 99/38056		7/1999
WO	WO 99/38237		7/1999
WO	WO 99/43250		9/1999
WO	WO 99/59042		11/1999
WO	WO 00/04430		1/2000
WO	WO 00/36962		6/2000
WO	WO 00/38026		6/2000
WO	WO 00/38029		6/2000
WO	WO0038028	A1	6/2000
WO	WO 00/78410		12/2000
WO	WO 01/06904		2/2001
WO	WO01/06905		2/2001
WO	WO 01/91623		6/2001
WO	WO0180703	A1	11/2001
WO	WO0191623	A2	12/2001
WO	WO 02/39864		5/2002
WO	WO 02/39868		5/2002
WO	WO 02/058527		8/2002
WO	WO02/062194		8/2002
WO	WO 02/067744		9/2002
WO	WO 02/067745		9/2002
WO	WO02/071175		9/2002
WO	WO 02/074150		9/2002
WO	WO 02/075356		9/2002
WO	WO 02/075469		9/2002
WO	WO 02/075470		9/2002
WO	WO02067752	A1	9/2002
WO	WO02069774	A1	9/2002
WO	WO02069775	A2	9/2002
WO	WO02071175		9/2002
WO	WO02075350	A1	9/2002
WO	WO02081074	A1	10/2002
WO	WO 02/101477		12/2002
WO	WO03015220	A1	2/2003
WO	WO03024292	A2	3/2003
WO	WO 03/026474		4/2003
WO	WO 03/040546		5/2003
WO	WO 03/040845		5/2003
WO	WO 03/040846		5/2003
WO	WO0269775	A3	5/2003
WO	WO03040546	A1	5/2003
WO	WO03062850	A2	7/2003
WO	WO03062852	A1	7/2003
WO	WO2004/004533		1/2004
WO	WO2004/006034		1/2004
WO	WO 2004/006034		1/2004
WO	WO2004004534	A1	1/2004
WO	WO2004005956	A1	1/2004
WO	WO2004/004533		4/2004
WO	WO2004043215	A1	5/2004
WO	WO2004/058028		7/2004
WO	WO2004/059409		7/2004
WO	WO2004058028		7/2004
WO	WO2004058028	A2	7/2004
WO	WO2004059409	A1	7/2004
WO	WO2005006935	A1	1/2005

(56) **References Cited**

FOREIGN PATENT DOCUMENTS

WO	WO2005036292	A1	4/2005
WO	WO 2005/055795		6/2005
WO	WO2005/055795		6/2005
WO	WO2005055795	A1	6/2005
WO	WO2005055796		6/2005
WO	WO2005055796	A2	6/2005
WO	WO2005/077244		8/2005
WO	WO2005076545	A1	8/2005
WO	WO2005077243	A1	8/2005
WO	WO2005081074	A1	9/2005
WO	WO2005082223	A1	9/2005
WO	WO2005083541	A1	9/2005
WO	WO2005098475	A1	10/2005
WO	WO2005098476	A1	10/2005
WO	WO2006046400	A1	5/2006
WO	WO2006/061133		6/2006
WO	WO2006/068403		6/2006
WO	WO2006061133	A1	6/2006
WO	WO2006068403	A1	6/2006
WO	WO2006073248	A1	7/2006
WO	WO2007036490	A2	4/2007
WO	WO2007036490	A3	5/2007
WO	WO2007065033	A2	6/2007
WO	WO2007137234	A2	11/2007

OTHER PUBLICATIONS

Jensfelt, et al. "Active Global Localization for a mobile robot using multiple hypothesis tracking", IEEE Transactions on Robots and Automation vol. 17, No. 5, pp. 748-760, Oct. 2001.

Jeong, et al. "An intelligent map-buiding system for indoor mobile robot using low cost photo sensors", SPIE vol. 6042 6 pages, 2005.

Kahney, "Robot Vacs are in the House," www.wired.com/news/technology/o,1282,59237,00.html, 6 pages, Jun. 18, 2003.

Karlsson et al., The vSLAM Algorithm for Robust Localization and Mapping, Proceedings of the 2005 IEEE International Conference on Robotics and Automation, Barcelona, Spain, pp. 24-29, Apr. 2005.

Karlsson, et al Core Technologies for service Robotics, IEEE/RSJ International Conference on Intelligent Robots and Systems (IROS 2004), vol. 3, pp. 2979-2984, Sep. 28-Oct. 2, 2004.

King "Heplmate-TM—Autonomous mobile Robots Navigation Systems", SPIE vol. 1388 Mobile Robots pp. 190-198, 1990.

Kleinberg, The Localization Problem for Mobile Robots, Laboratory for Computer Science, Massachusetts Institute of Technology, 1994 IEEE, pp. 521-531, 1994.

Knight et al., "Localization and Identficaton of Visual Landmarks", Journal of Computing Sciences in Colleges, vol. 16 Issue 4, 2001 pp. 312-313, May 2001.

Kolodko et al. "Experimental System for Real-Time Motion Estimation", Proceedings of the 2003 IEEE/ASME International Conference on Advanced Intelligent Mechatronics (AIM 2003), pp. 981-986, 2003.

Komoriya et al., Planning of Landmark Measurement for the Navigation of a Mobile Robot, Proceedings of the 1992 IEEE/RSJ International Cofnerence on Intelligent Robots and Systems, Raleigh, NC pp. 1476-1481, Jul. 7-10, 1992.

Krupa et al. "Autonomous 3-D Positioning of Surgical Instruments in Robotized Laparoscopic Surgery Using Visual Servoing", IEEE Transactions on Robotics and Automation, vol. 19, No. 5, pp. 842-853, Oct. 5, 2003.

Kuhl et al. "Self Localization in Environments usng Visual Angles", VRCAI '04 Proceedings of the 2004 ACM SIGGRAPH international conference on Virtual Reality continuum and its applications in industry, pp. 472-475, 2004.

Kurth, "Range-Only Robot Localization and SLAM with Radio", http://www.ri.cmu.edu/pub_files/pub4/kurth_derek_2004_1/kurth_derek_2004_1.pdf. 60 pages, May 2004.

Lambrinos, et al. "A mobile robot employing insect strategies for navigation", http://www8.cs.umu.se/kurser/TDBD17/VT04/dl/Assignment%20Papers/lambrinos-RAS-2000.pdf, 38 pages, Feb. 19, 1999.

Lang et al. "Visual Measurement of Orientation Using Ceiling Features", 1994 IEEE, pp. 552-555, 1994.

Lapin, "Adaptive position estimation for an automated guided vehicle", SPIE vol. 1831 Mobile Robots VII, pp. 82-94, 1992.

LaValle et al. "Robot Motion Planning in a Changing, Partially Predictable Environment", 1994 IEEE International Symposium on Intelligent Control, Columbus, OH, pp. 261-266, Aug. 16-18, 1994.

Lee, et al. "Localization of a Mobile Robot Using the Image of a Moving Object", lEEE Transaction on Industrial Electronics, vol. 50, No. 3 pp. 612-619, Jun. 2003.

Lee, et al. "Development of Indoor Navigation system for Humanoid Robot Using Multi-sensors Integration", ION NTM, San Diego, CA pp. 798-805, Jan. 22-24, 2007.

Leonard, et al. "Mobile Robot Localization by tracking Geometric Beacons", IEEE Transactions on Robotics and Automation, vol. 7, No. 3 pp. 376-382, Jun. 1991.

Li et al. "Making a Local Map of Indoor Environments by Swiveling a Camera and a Sonar", Proceedings of the 1999 IEEE/RSJ International Conference on Intelligent Robots and Systems, pp. 954-959, 1999.

Lin, et al.. "Mobile Robot Navigation Using Artificial Landmarks", Journal of robotics System 14(2). pp. 93-106, 1997.

Linde "Dissertation, "On Aspects of Indoor Localization"" https://eldorado.tu-dortmund.de/handle/2003/22854, University of Dortmund, 138 pages, Aug. 28, 2006.

Lumelsky, et al. "An Algorithm for Maze Searching with Azimuth Input", 1994 IEEE International Conference on Robotics and Automation, San Diego, CA vol. 1, pp. 111-116, 1994.

Luo et al., "Real-time Area-Covering Operations with Obstacle Avoidance for Cleaning Robots," 2002, IEeE, p. 2359-2364.

Ma "Thesis: Documentation on Northstar", California Institute of Technology, 14 pages, May 17, 2006.

Madsen, et al. "Optimal landmark selection for triangulation of robot postion", Journal of Robotics and Autonomous Systems vol. 13 pp. 277-292, 1998.

Martishevcky, "The Accuracy of point light target coordinate determination by dissectoral tracking system", SPIE vol. 2591 pp. 25-30.

Matsutek Enterprises Co. Ltd "Automatic Rechargeable Vacuum Cleaner", http://matsutek.manufacturer.globalsources.com/si/6008801427181/pdtl/Home-vacuum/10 . . . , Apr. 23, 2007.

McGillem, et al. "Infra-red Lacation System for Navigation and Autonomous Vehicles", 1988 IEEE International Conference on Robotics and Automation, vol. 2, pp. 1236-1238, Apr. 24-29, 1988.

McGillem, et al. "A Beacon Navigation Method for Autonomous Vehicles", IEEE Transactions on Vehicular Technology, vol. 38, No. 3, pp. 132-139, Aug. 1989.

Michelson "Autonomous Navigation", 2000 Yearbook of Science & Technology. McGraw-Hill, New York. ISBN 0-07-052771-7, pp. 28-30, 1999.

Miro, et al. "Towards Vision Based Navigation in Large Indoor Environments", Proceedings of the IEEE/RSJ International Conference on Intelligent Robots and Systems, Beijing, China, pp. 2096-2102, Oct. 9-15, 2006.

MobileMag "Samsung Unveils High-tech Robot Vacuum Cleaner", http://www.mobilemag.com/content/100/102/C2261/, 4 pages, Mar. 18, 2005.

Monteiro, et al. "Visual Servoing for Fast Mobile Robot: Adaptive Estimation of Kinematic Parameters", Proceedings of the IECON '93., International Conference on Industrial Electronics, Maui, HI, pp. 1588-1593, Nov. 15-19, 1993.

Moore, et al. A simple Map-bases Localization strategy using range measurements, SPIE vol. 5804 pp. 612-620, 2005.

Munich et al. "SIFT-ing Through Features with ViPR", IEEE Robotics & Automation Magazine, pp. 72-77, Sep. 2006.

Munich et al. "ERSP: A Software Platform and Architecture of the Service Robotics Industry", Intelligent Robots and Systems, 2005. (IROS 2005), pp. 460-467, Aug. 2-6, 2005.

Nam, et al. "Real-Time Dynamic Visual Tracking Using PSD Sensors and extended Trapezoidal Motion Planning", Applied Intelligence 10, pp. 53-70, 1999.

Nitu et al. "Optomechatronic System for Position Detection of a Mobile Mini-Robot", IEEE Ttransactions on Industrial Electronics, vol. 52, No. 4, pp. 969-973, Aug. 2005.

(56) **References Cited**

OTHER PUBLICATIONS

On Robo "Robot Reviews Samsung Robot Vacuum (VC-RP30W)", www.onrobo.com/reviews/AT_Home/vacuum_cleaners/on00vcrb30rosam/index.htm.. 2 pages, 2005.
Innovation First "2004 EDU Robot Controller Reference Guide", http://www.ifirobotics.com, 13 pgs., Mar. 1, 2004.
Borges et al. "Optimal Mobile Robot Pose Estimation Using Geometrical Maps", IEEE Transactions on Robotics and Automation, vol. 18, No. 1, pp. 87-94, Feb. 2002.
Braunstingl et al. "Fuzzy Logic Wall Following of a Mobile Robot Based on the Concept of General Perception" ICAR '95, 7th International Conference on Advanced Robotics, Sant Feliu De Guixols, Spain, pp. 367-376, Sep. 1995.
Bulusu, et al. "Self Configuring Localization systems: Design and Experimental Evaluation", ACM Transactions on Embedded Computing Systems vol. 3 No. 1 pp. 24-60, 2003.
Caccia, et al. "Bottom-Following for Remotely Operated Vehicies", 5th IFAC conference, Alaborg, Denmark, pp. 245-250 Aug. 1, 2000.
Chae, et al. "StarLITE: A new artificial landmark for the navigation of mobile robots", http://www.irc.atr.jp/jk-nrs2005/pdf/Starlite.pdf, 4 pages, 2005.
Chamberlin et al. "Team 1: Robot Locator Beacon System" NASA Goddard SFC, Design Proposal, 15 pages, Feb. 17, 2006.
Champy "Physical management of IT assets in Data Centers using RFID technologies", RFID 2005 University, Oct. 12-14, 2005.
Chiri "Joystck Control for Tiny OS Robot", http://eecs.berkeley.edu/Programs/ugrad/superb/papers2002/chiri.pdf. 12 pages, Aug. 8, 2002.
Christensen et al. "Theoretical Methods for Planning and Control in Mobile Robotics" 1997 First International Conference on Knowledge-Based Intelligent Electronic Systems, Adelaide, Australia, pp. 81-86, May 21-27, 1997.
Andersen et al., "Landmark based navigation strategies", SPIE Conference on Mobile Robots XIII, SPIE vol. 3525, pp.
Clerentin, et al. "A localization method based on two omnidirecional peception systems cooperation" Proc of IEEE International Conference on Robotics & Automation, San Francisco, CA vol. 2, pp. 1219-1224, Apr. 2000.
Corke "High Performance Visual serving for robots end-point control". SPIE vol. 2056 Intelligent robots and computer vision 1993.
Cozman et al. "Robot Localization using a Computer Vision Sextant", IEEE International Midwest Conference on Robotics and Automation, pp. 106-111, 1995.
D'Orazio, et al. "Model based Vision System for mobile robot position estimation", SPIE vol. 2058 Mobile Robots VIII, pp. 38-49, 1992.
De Bakker, et al. "Smart PSD—array for sheet of light range imaging", Proc. of SPIE vol. 3965. pp. 1-12, May 15, 2000.
Desaulniers, et al. "An Efficient Algorithm to find a shortest path for a car-like Robot", IEEE Transactions on robotics and Automation vol. 11 No. 6, pp. 819-828, Dec. 1995.
Dorfmüller-Ulhaas "Optical Tracking From User Motion to 3D Interaction", http://www.cg.tuwien.ac.at/research/publications/2002/Dorfmueller-Ulhaas-thesis, 182 pages, 2002.
Dorsch, et al. "Laser Triangulation: Fundamental uncertainty in distance measurement", Applied Optics, vol. 33 No. 7, pp. 1306-1314, Mar. 1, 1994.
Dudek, et al. "Localizing A Robot with Minimum Travel" Proceedings of the sixth annual ACM-SIAM symposium on Discrete algorithms, vol. 27 No. 2 pp. 583-604, Apr. 1998.
Dulimarta, et al. "Mobile Robot Localization in Indoor Environment", Pattern Recognition, vol. 30, No. 1, pp. 99-111, 1997.
EBay "Roomba Timer—> Timed Cleaning—Floorvac Robotic Vacuum", Cgi.ebay.com/ws/eBayISAPI.dll?viewitem&category=43526&item=4375198387&rd=1, 5 pages, Apr. 20, 2005.
Electrolux "Welcome to the Electrolux trilobite" www.electroluxusa.com/node57.asp?currentURL=node142.asp%3F, 2 pages, Mar. 18, 2005.
Eren, et al. "Accuracy in position estimation of mobile robots based on coded infrared signal transmission", Proceedings: Integrating Intelligent Instrumentation and Control, Instrumentation and Measurement Technology Conference, 1995. IMTC/95, pp. 548-551, 1995.
Eren, et al. "Operation of Mobile Robots in a Structured Infrared Environment", Proceedings. 'Sensing, Processing, Networking', IEEE Instrumentation and Measurement Technology Conference, 1997 (IMTC/97), Ottawa, Canada vol. 1, pp. 20-25, May 19-21, 1997.
Becker, et al. "Reliable Navigation Using Landmarks" IEEE International Conference on Robotics and Automation, 0-7803-1965-6, pp. 401-406, 1995.
Benayad-Cherif, et al., "Mobile Robot Navigation Sensors" SPIE vol. 1831 Mobile Robots, VII, pp. 378-387, 1992.
Facchinetti, Claudio et al. "Using and Learning Vision-Based Self-Positioning for Autonomous Robot Navigation", ICARCV'94, vol. 3 pp. 1694-1698, 1994.
Betke, et al., "Mobile Robot localization using Landmarks" Proceedings of the IEEE/RSJ/GI International Conference on Intelligent Robots and Systems '94 "Advanced Robotic Systems and the Real World" (IROS '94), vol.
Facchinetti, Claudio et al, "Self-Positioning Robot Navigation Using Ceiling Images Sequences", ACCV '95, 5 pages, Dec. 5-8, 1995.
Fairfield, Nathaniel et al. "Mobile Robot Localization with Sparse Landmarks", SPIE vol. 4573 pp. 148-155, 2002.
Favre-Bulle, Bernard "Efficient tracking of 3D—Robot Position by Dynamic Triangulation", IEEE Instrumentation and Measurement Technology Conference IMTC 98 Session on Instrumentation and Measurement in Robotics, vol. 1, pp. 446-449, May 18-21, 1998.
Fayman "Exploiting Process Integration and Composition in the context of Active Vision", IEEE Transactions on Systems, Man, and Cybernetics—Part C: Application and reviews, vol. 29 No. 1, pp. 73-86, Feb. 1999.
Franz, et al. "Biomimetric robot navigation", Robotics and Autonomous Systems vol. 30 pp. 133-153, 2000.
Friendly Robotics "Friendly Robotics—Friendly Vac, Robotic Vacuum Cleaner", www.friendlyrobotics.com/vac.htm. 5 pages Apr. 20, 2005.
Fuentes, et al. "Mobile Robotics 1994", University of Rochester. Computer Science Department, TR 588, 44 pages, Dec. 7, 1994.
Bison, P et al., "Using a structured beacon for cooperative position estimation" Robotics and Autonomous Systems vol. 29, No. 1, pp. 33-40, Oct. 1999.
Fukuda, et al. "Navigation System based on Ceiling Landmark Recognition for Autonomous mobile robot", 1995 IEEE/RSJ International Conference on Intelligent Robots and Systems 95. 'Human Robot Interaction and Cooperative Robots', Pittsburgh, PA, pp. 1466/1471, Aug. 5-9, 1995.
Gionis "A hand-held optical surface scanner for environmental Modeling and Virtual Reality", Virtual Reality World, 16 pages 1996.
Goncalves et al. "A Visual Front-End for Simultaneous Localization and Mapping", Proceedings of the 2005 IEEE International Conference on Robotics and Automation, Barcelona, Spain, pp. 44-49, Apr. 2005.
Gregg et al. "Autonomous Lawn Care Applications", 2006 Florida Conference on Recent Advances in Robotics, FCRAR 2006, pp. 1-5, May 25-26, 2006.
Hamamatsu "SI PIN Diode S5980, S5981 S587—Multi-element photodiodes for surface mounting", Hamatsu Photonics, 2 pages Apr. 2004.
Hammacher Schlemmer "Electrolux Trilobite Robotic Vacuum" www.hammacher.com/publish/71579.asp?promo=xsells, 3 pages, Mar. 18, 2005.
Haralick et al. "Pose Estimation from Corresponding Point Data", IEEE Transactions on systems, Man, and Cybernetics, vol. 19, No. 6, pp. 1426-1446. Nov. 1989.
Hausler "About the Scaling Behaviour of Optical Range Sensos", Fringe '97, Proceedings of the 3rd International Workshop on Automatic Processing of Fringe Patterns, Bremen, Germany, pp. 147-155, Sep. 15-17, 1997.
Blaasvaer, et al. "AMOR—An Autonomous Mobile Robot Navigaton System", Proceedings of the IEEE Intenatonal Conference on Systems, Man, and Cybernetics, pp. 2266-2271, 1994.

(56) **References Cited**

OTHER PUBLICATIONS

Hoag, et al. "Navigation and Guidance in interstellar space", ACTA Astronautica vol. 2, pp. 513-533, Feb. 14, 1975.
Huntsberger et al. "CAMPOUT: A Control Architecture for Tightly Coupled Coordination of Multirobot Systems for Planetary Surface Exploration", IEEE Transactions on Systems, Man, and Cybernetics—Part A: Systems and Humans, vol. 33, No. 5, pp. 550-559, Sep. 2003.
Iirobotics.com "Samsung Unveils Its Multifunction Robot Vacuum", www.iirobotics.com/webpages/hotstuff.php?ubre=111, 3 pages, Mar. 18, 2005.
U.S. Appl. No. 60/605,066, Aug. 27, 2004, Taylor.
U.S. Appl. No. 60/605,181, Aug. 27, 2004, Taylor.
Andersen et al., "Landmark based navigation strategies", SPIE Conference on Mobile Robots XIII, SPIE vol. 3525, pp. 170-181, Jan. 8, 1999.
Certified U.S. Appl. No. 60/605,066 as provided to WIPO in PCT/US2005/030422, corresponding to U.S. Appl. No. 11/574,290, U.S. publication 2008/0184518, filing date Aug. 27, 2004.
Certified U.S. Appl. No. 60/605,181 as provided to WIPO in PCT/US2005/030422, corresponding to U.S. Appl. No. 11/574,290, U.S. publication 2008/0184518, filed Aug. 27, 2004.
Derek Kurth, "Range-Only Robot Localization and SLAM with Radio", http://www.ri.cmu.edu/pub_files/pub4/kurth_derek_2004_1/kurth_derek_2004_1.pdf. 60 pages, May 2004, accessed Jul. 27, 2012.
Electrolux Trilobite, Jan. 12, 2001, http://www.electrolux-ui.com:8080/2002%5C822%5C833102EN.pdf, accessed Jul. 2, 2012, 10 pages.
Florbot GE Plastics, 1989-1990, 2 pages, available at http://www.fuseid.com/, accessed Sep. 27, 2012.
Gregg et al., "Autonomous Lawn Care Applications," 2006 Florida Conference on Recent Advances in Robotics, Miami, Florida, May 25-26, 2006, Florida International University, 5 pages.
King and Weiman, "Helpmate™ Autonomous Mobile Robots Navigation Systems," SPIE vol. 1388 Mobile Robots, pp. 190-198 (1990).
Li et al. "Robust Statistical Methods for Securing Wireless Localization in Sensor Networks," Information Procesing in Sensor Networks, 2005, Fourth International Symposium on, pp. 91-98, Apr. 2005.
Martishevcky, "The Accuracy of point light target coordinate determination by dissectoral tracking system", SPIE vol. 2591, pp. 25-30, Oct. 23, 2005.
Miwako Doi "Using the symbiosis of human and robots from approaching Research and Development Center," Toshiba Corporation, 16 pages, available at http://warp.ndl.go.jp/info:ndljp/pid/258151/www.soumu.go.jp/joho_tsusin/policyreports/chousa/netrobot/pdf/030214_1_33_a.pdf, Feb. 26, 2003.
Paromtchik "Toward Optical Guidance of Mobile Robots," Proceedings of the Fourth World Multiconference on Systemics, Cybermetics and Informatics, Orlando, FL, USA, Jul. 23, 2000, vol. IX, pp. 44-49, available at http://emotion.inrialpes.fr/~paromt/infos/papers/paromtchik:asama:sci:2000.ps.gz, accessed Jul. 3, 2012.
Roboking—not just a vacuum cleaner, a robot!, Jan. 21, 2004, infocom.uz/2004/01/21/robokingne-prosto-pyilesos-a-robot/, accessed Oct. 10, 2011, 7 pages.
Sebastian Thrun, "Learning Occupancy Grid Maps With Forward Sensor Models," Autonomous Robots 15, 111-127, Sep. 1, 2003.
SVET Computers—New Technologies—Robot Vacuum Cleaner, Oct. 1999, available at http://www.sk.rs/1999/10/sknt01.html, accessed Nov. 1, 2011.
Written Opinion of the International Searching Authority, PCT/US2004/001504, Aug. 20, 2012, 9 pages.
Examination report for European Patent Application No. 09175479.6 dated Dec. 30, 2009.
Examination report for Japanese Patent Application No. 2006-551023 dated Dec. 8, 2009.
Examination report for U.S. Appl. No. 11/207,574 dated Jul. 30, 2007.
Examination report for U.S. Appl. No. 11/207,574 dated Jun. 23, 2008.
Examination report for U.S. Appl. No. 11/207,574 dated Oct. 17, 2008.
Examination report for U.S. Appl. No. 11/207,575 dated Jul. 30, 2007.
Examination report for U.S. Appl. No. 11/207,575 dated May 18, 2009.
Examination report for U.S. Appl. No. 11/207,575 dated Jul. 30, 2008.
Examination report for U.S. Appl. No. 11/207,575 dated Mar. 18, 2008.
Examination report for U.S. Appl. No. 11/207,575 dated Sep. 3, 2009.
Examination report for U.S. Appl. No. 11/207,620 dated Oct. 12, 2007.
Examination report for U.S. Appl. No. 11/835,355 dated Dec. 2, 2008.
Examination report for U.S. Appl. No. 11/835,355 dated Sep. 14, 2009.
Examination report for U.S. Appl. No. 11/835,360 dated Jun. 24, 2009.
Examination report for U.S. Appl. No. 11/835,361 dated Feb. 6, 2009.
Examination report for U.S. Appl. No. 11/835,361 dated Oct. 26, 2009.
Tribelhorn et al., "Evaluating the Roomba: A low-cost, ubiquitous platform for robotics research and education," 2007, IEEE, p. 1393-1399.
Examination report for U.S. Appl. No. 11/835,355 dated Jun. 9, 2010.
Examination report for U.S. Appl. No. 11/207,575 dated Mar. 4, 2010.
Examination report for U.S. Appl. No. 11/835,363 dated Jun. 16, 2009.
Examination report for U.S. Appl. No. 11/835,363 dated Aug. 28, 2008.
Examination report for U.S. Appl. No. 11/835,359 dated Oct. 14, 2010.
Sadath M Malik et al. "Virtual Prototyping for Conceptual Design of a Tracked Mobile Robot". Electrical and Computer Engineering, Canadian Conference on, IEEE, PI. May 1, 2006, pp. 2349-2352.
International Search Report and Written Opinion of the International Searching Authority in connection with International Application No. PCT/US2007/080138 dated Jun. 25, 2009, 68 pages.
Examination Report for European Patent Application No. 06721029.4 dated Jan. 11, 2008.
International Search Report for International Application No. PCT/US2006/006550, mailed from the International Search Authority on Sep. 18, 2006, 12 pgs.
Search report dated Apr. 11, 2011 for corresponding EP application 10183099.
Search report dated Apr. 11, 2011 for corresponding EP application 10183086.
Search report dated Apr. 13, 2011 for corresponding EP application 10183153.
Prassler et al., "A Short History of Cleaning Robots", Autonomous Robots 9, 211-226, 2000.
Examination report with translation dated Jan. 18, 2011 for corresponding application (JP) 2007-556430.
Wolf et al. "Robust Vision-based Localization for Mobile Robots Using an Image Retrieval System Based on Invariant Features", Proceedings of the 2002 IEEE International Conference on Robotics & Automation, Washington, D.C. pp. 359-365. May 2002.
Wolf et al. "Robust Vision-Based Localization by Combining an Image-Retrieval System with Monte Carol Localization", IEEE Transactions on Robotics. vol. 21. No. 2. pp. 208-216, Apr. 2005.
Wong "EIED Online>> Robot Business", ED Online ID# 13114, 17 pages, Jul. 2006.
Yamamoto et al. "Optical Sensing for Robot Perception and Localization", 2005 IEEE Workshop on Advanced Robotics and its Social Impacts, pp. 14-17, 2005.

(56) **References Cited**

OTHER PUBLICATIONS

Yata et al. "Wall Following Using Angle Information Measured by a Single Ultrasonic Transducer", Proceedings of the 1998 IEEE, International Conference on Robotics & Automation, Leuven, Belgium, pp. 1590-1596, May 1998.
Yun, et al. "Image-Based Absolute Positioning System for Mobile Robot Navigation", IAPR International Workshops SSPR, Hong Kong, pp. 261-269, Aug. 17-19, 2006.
Yun, et al. "Robust Positioning a Mobile Robot with Active Beacon Sensors". Lecture Notes in Computer Science, 2006, vol. 4251, pp. 690-897, 2006.
Yuta, et al. "Implementation of an Active Optical Range sensor Using Laser Slit for In-Door Intelligent Mobile Robot", IEE/RSJ International workshop on Intelligent Robots and systems (IROS 91) vol. 1, Osaka, Japan, pp. 415-420, Nov. 3-5, 1991.
Zha et al. "Mobile Robot Localization Using Incomplete Maps for Change Detection in a Dynamic Environment", Advanced Intelligent Mechatronics '97. Final Program and Abstacts., IEEE/ASME International Conference, pp. 110, Jun. 16-20, 1997.
Zhang, et al. "A Novel Mobile Robot Localization Based on Vision", SPIE vol. 6279, 6 pages, Jan. 29, 2007.
Electrolux Trilobite, Time to enjoy life, 38 pages http://www.robocon.co.kr/trilobite/Presentation_Trilobite_Kor_030104.ppt accessed Dec. 22, 2011.
Robot Buying Guide, LG announces the first robotic vacuum cleaner for Korea, Apr. 21, 2003 http://robotbg.com/news/2003/04/22/lg_announces_the_first_robotic_vacu.
Taipei Times, Robotic vacuum by Matsuhita about of undergo testing, Mar. 26, 2002 http//www.taipeitimes.com/News/worldbiz/archives/2002/03/26/0000129338 accessed.
Tech-on! http://techon.nikkeibp.co.jp/members/01db/200203/1006501/, 4 pages, accessed Nov. 1, 2011.
Special Reports, Vacuum Cleaner Robot Operated in Conjunction with 3G Celluar Phone vol. 59, No. 9 (2004) 3 pages http://www.toshiba.co.jp/tech/review/2004/09/59_0.
McLurkin "The Ants: A community of Microrobots", Paper submitted for requirements of BSEE at MIT, May 12, 1995.
McLurkin Stupid Robot Tricks: A Behavior-based Distributed Algorithm Library for Programming Swarms of Robots, Paper submitted for requirements of BSEE at MIT, May 2004.
Kurs et al, Wireless Power transfer via Strongly Coupled Magnetic Resonances, Downloaded from www.sciencemag.org , Aug. 17, 2007.
Morland,"Autonomous Lawnmower Control", Downloaded from the internet at: http://cns.bu.edu/~cjmorlan/robotics/lawnmower/report.pdf, 10 pages, Jul. 24, 2002.
Hitachi "Feature", http://kadenfan.hitachi.co.jp/robot/feature/feature.html , 1 page Nov. 19, 2008.
OnRobo "Samsung Unveils Its Multifunction Robot Vacuum", www.onrobo.com/enews/0210/samsung_vacuum.shtml, 3 pages, May 18, 2005.
Pages et al. "Optimizing Plane-to-Plane Positioning Tasks by Image-Based Visual Servoing and Structured Light", IEEE Transactions on Robotics, vol. 22, No. 5, pp. 1000-1010, Oct. 2006.
Pages et al. "A camera-projector system for robot positioning by visual sevoing", Proceedings of the 2006 Conference on Computer Vision and Pattern Recognition Workshop (CVPRW06), 8 pages, Jun. 17-22, 2006.
Pages, et al. "Robust decoupled visual servoing based on structured light", 2005 IEEE/RSJ Int. Conf. on Intelligent Robots and Systems, pp. 2676-2681, 2005.
Park et al. "A Neural Network Based Real-Time Robot Tracking Controller Using Position Sensitive Detectors," IEEE World Congress on Computational Intelligence., 1994 IEEE International Conference on Neutral Networks, Orlando, Florida pp. 2754-2758, Jun. 27-Jul. 2, 1994.
Park, et al. "Dynamic Visual Servo Control of Robot Manipulators using Neutral Networks", The Korean Institute Telematics and Electronics, vol. 29-B, No. 10, pp. 771-779, Oct. 1992.
Paromtchik, et al. "Optical Guidance System for Multiple mobile Robots", Proceedings 2001 ICRA. IEEE International Conference on Robotics and Automation, vol. 3, pp. 2935-2940 (May 21-26, 2001).
Penna, et al. "Models for Map Building and Navigation", IEEE Transactions on Systems. Man. And Cybernetics. vol. 23 No. 5, pp. 1276-1301, Sep./Oct. 1993.
Pirjanian "Reliable Reaction", Proceedings of the 1996 IEEE/SICE/RSJ International Conference on Multisensor Fusion and Integration for Intelligent Systems, pp. 158-165, 1996.
Pirjanian "Challenges for Standards for consumer Robotics", IEEE Workshop on Advanced Robotics and its Social impacts, pp. 260-264, Jun. 12-15, 2005.
Piranian et al. "Distrbued Control for a Modular Reconfigurable Cliff Robot", Proceedings of the 2002 IEEE International Conference on Robotics & Automation, Washington, D.C. pp. 4083-4088, May 2002.
Pirjanian et al. "Representation and Execution of Plan Sequences for Multi-Agent Systems", Proceedings of the 2001 IEEE/RSJ International Conference on Intelligent Robots and Systems, Maui, Hawaii, pp. 2117-2123, Oct. 29-Nov. 3, 2001.
Pirjanian et al. "Multi-Robot Target Acquisition using Multiple Objective Behavior Coordination", Proceedings of the 2000 lEEE International Conference on Robotics & Automation, San Francisco, CA, pp. 2696-2702, Apr. 2000.
Pirjanian et al. "A decision-theoretic approach to fuzzy behavior coordination", 1999 IEEE International Symposium on Computational Intelligence in Robotics and Automation, 1999. CIRA '99., Monterey, CA, pp. 101-106, Nov. 8-9, 1999.
Pirjanian et al. "Improving Task Reliability by Fusion of Redundant Homogeneous Modules Using Voting Schemes", Proceedings of the 1997 IEEE International Conference on Robotics and Automation, Albuquerque, NM, pp. 425-430, Apr. 1997.
Prassler et al., "A Short History of Cleaning Robots", Autonomous Robots 9, 211-226, 2000, 16 pages.
Remazeilles, et al. "Image based robot navigation in 3D environments", Proc. of SPIE, vol. 6052, pp. 1-14, Dec. 6, 2005.
Rives, et al. "Visual servoing based on ellipse features", SPIE vol. 2056 Intelligent Robots and Computer Vision pp. 356-367, 1993.
Robotics World Jan. 2001: "A Ciean Sweep" (Jan. 2001).
Ronnback "On Methods for Assistive Mobile Robots", http://www.openthesis.org/documents/methods-assistive-mobile-robots-595019.html, 218 pages, Jan. 1, 2006.
Roth-Tabak, et al. "Environment Model for mobile Robots Indoor Navigation", SPIE vol. 1388 Mobile Robots pp. 453-463, 1990.
Sahin, et al. "Development of a Visual Object Localization Module for Mobile Robots", 1999 Third European Workshop on Advanced Mobile Robots, (Eurobot '99), pp. 65-72, 1999.
Salomon, et al. "Low-Cost Optical Indoor Localization system for Mobile Objects without Image Processing", IEEE Conference on Emerging Technologies and Factory Automation, 2006. (ETFA '06). pp. 629-632. Sep. 20-22, 2006.
Sato "Range Imaging Based on Moving Pattern Light and Spatio-Temporal Matched Filter", Proceedings International Conference on Image Processing, vol. 1., Lausanne, Switzerland, pp. 33-36, Sep. 16-19, 1996.
Schenker, et al. "Lightweight rovers for Mars science exploration and sample return", Intelligent Robots and Computer Vision XVI, SPIE Proc. 3208, pp. 24-36, 1997.
Shimoga et al, "Touch and Force Reflection for Telepresence Surgery", Engineering in Medicine and Biology Society, 1994. Engineering Advances: New Opportunities for Biomedical Engineers. Proceedings of the 16th Annual International Conference of the IEEE, Baltimore, MD, pp. 1049-1050, 1994.
Sim, et al "Learning Visual Landmarks for Pose Estimation", IEEE International Conference on Robotics and Automation, vol. 3, Detroit, MI, pp. 1972-1978, May 10-15, 1999.
Sobh et al. "Case Studies in Web-Controlled Devices and Remote Manipulation", Automation Congress, 2002 Proceedings of the 5th Biannual World, pp. 435-440, Dec. 10, 2002.
Stella, et al. "Self-Location for Indoor Navigation of Autonomous Vehicles" Part of the SPIE conference on Enhanced and Synthetic Vision SPIE vol. 3364 pp. 298-302, 1998.

(56) **References Cited**

OTHER PUBLICATIONS

Summet "Tracking Locations of Moving Hand-held Displays Using Projected Light", Pervasive 2005, LNCS 3468 pp. 37-46 (2005).
Svedman et al. "Structure from Stereo Vision using Unsynchronized Cameras for Simultaneous Localization and Mapping", 2005 IEEE/RSJ International Conference on Intelligent Robots and Systems, pp. 2993-2998, 2005.
Takio et al. "Real-Time Position and Pose Tracking Method of Moving Object Using Visual Servo System", 47th IEEE International Symposium on Circuits and Systems, pp. 167-170, 2004.
Teller "Pervasive pose awareness for people, Objects and Robots", http://www.ai.mit.edu/lab/dangerous-ideas/Spring2003/teller-pose.pdf, 6 pages, Apr. 30, 2003.
Terada et al. "An Acquisition of the Relation between Vision and Action using Self-Organizing Map and Reinforcement Learning", 1998 Second International Conference on Knowledge-Based Intelligent Electronic Systems, Adelaide, Australiam pp. 429-434, Apr. 21-23, 1998.
Trebi-Ollennu et al. "Mars Rover Pair Cooperatively Transporting a Long Payload", Proceedings of the 2002 IEEE International Conference on Robotics & Automation, Washington, D.C. pp. 3136-3141, May 2002.
Tse et al. "Design of a Navigation System for a Household Mobile Robot Using Neural Networks", Department of Manufacturing Engg. & Engg. Management, City University of Hong Kong, pp. 2151-2156, 1998.
Watanabe et al. "Position Estimation of Mobile Robots With Internal and External Sensors Using Uncertainty Evolution Technique", 1990 IEEE International Conference on Robotics and Automation, Cincinnati, OH, pp. 2011-2016, May 13-18, 1990.
Watts "Robot, boldly goes where no man can", The Times—pp. 20, Jan. 1985.
Wijk at al. "Triangulation-Based Fusion of Sonar Data with Application in Robot Pose Tracking", IEEE Transactions on Robotics and Automation, vol. 16, No. 6, pp. 740-752, Dec. 2000.
Ascii, Mar. 25, 2002, http://ascii.jp/elem/000/000/330/330024/ accessed Nov. 1, 2011. 7 pages.
Barker, "Navigation by the Stars—Ben Barker 4th Year Project," Nov. 2004, 20 pages.
CleanMate 365, Intelligent Automatic Vacuum Cleaner, Model No. QQ-1, User Manual www.metapo.com/support/user_manual.pdf , Dec. 2005, 11 pages.
Denning Roboscrub image (1989), 1 page.
Doty et al., "Sweep Strategies for a Sensory-Driven, Behavior-Based Vacuum Cleaning Agent," AAAI 1993 Fall Symposium Series, Instantiating Real-World Agents, pp. 1-6, Oct. 22-24, 1993.
Euroflex Intelligente, (English excerpt only), 2006, 15 pages.
Evolution Robotics, "NorthStar—Low-cost Indoor Localization—How it Works," E Evolution Robotics , 2 pages, 2005.
Gat, "Robust Low-Computation Sensor-driven Control for Task-Directed Navigation," Proc of IEEE International Conference on Robotics and Automation , Sacramento, CA pp. 2484-2489, Apr. 1991.
Grumet, "Robots Clean House," Popular Mechanics, Nov. 2003, 3 pages.
Hitachi, http://www.hitachi.co.jp/New/cnews/hi_030529_hi_030529.pdf , 8 pages, May 29, 2003.
Karcher RC 3000 Cleaning Robot—user manual Manufacturer: Alfred-Karcher GmbH & Co, Cleaning Systems, Alfred Karcher—Str 28-40, PO Box 160, D-71349 Winnenden, Germany, Dec. 2002, 8 pages.
KOOLVAC Robotic Vacuum Cleaner Owner's Manual, Koolatron, 2004, 13 pages.
Maschinemarkt Würzburg 105, No. 27, pp. 3, 30, Jul. 5, 1999.
Schofield, "Neither Master nor slave—A Practical Study in the Development and Employment of Cleaning Robots, Emerging Technologies and Factory Automation," 1999 Proceedings ETFA '99 1999 7th IEEE International Conference on Barcelona, Spain, pp. 1427-1434, Oct. 1999.
TheRobotStore.com, "Friendly Robotics Robotic Vacuum RV400—The Robot Store," www.therobotstore.com/s.nl/sc.9/category.-109/it.A/id.43/.f, 1 page, Apr. 2005.
UAMA (Asia) Industrial Co., Ltd., "RobotFamily," 2005, 1 page.

* cited by examiner

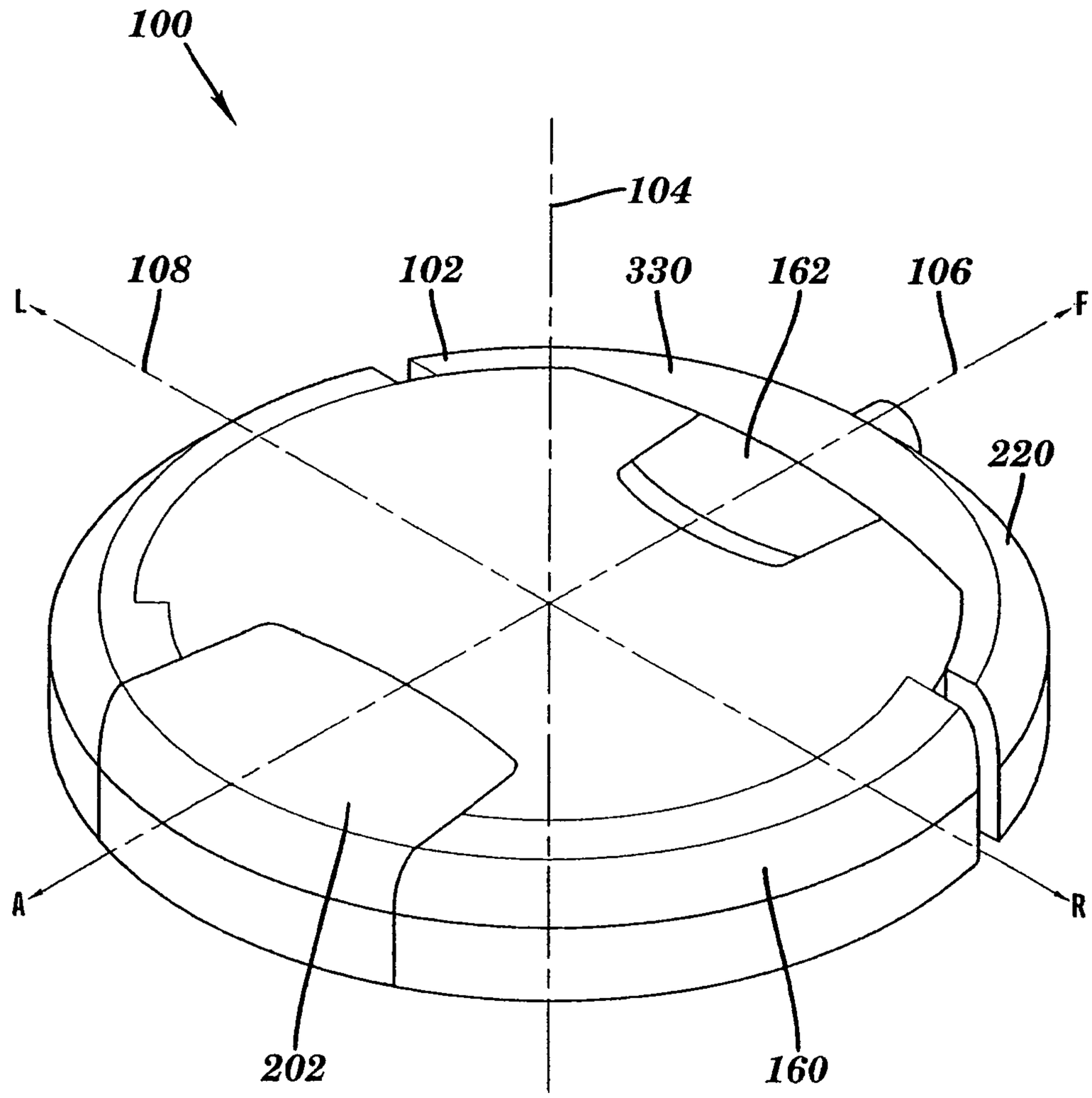

FIG. 1

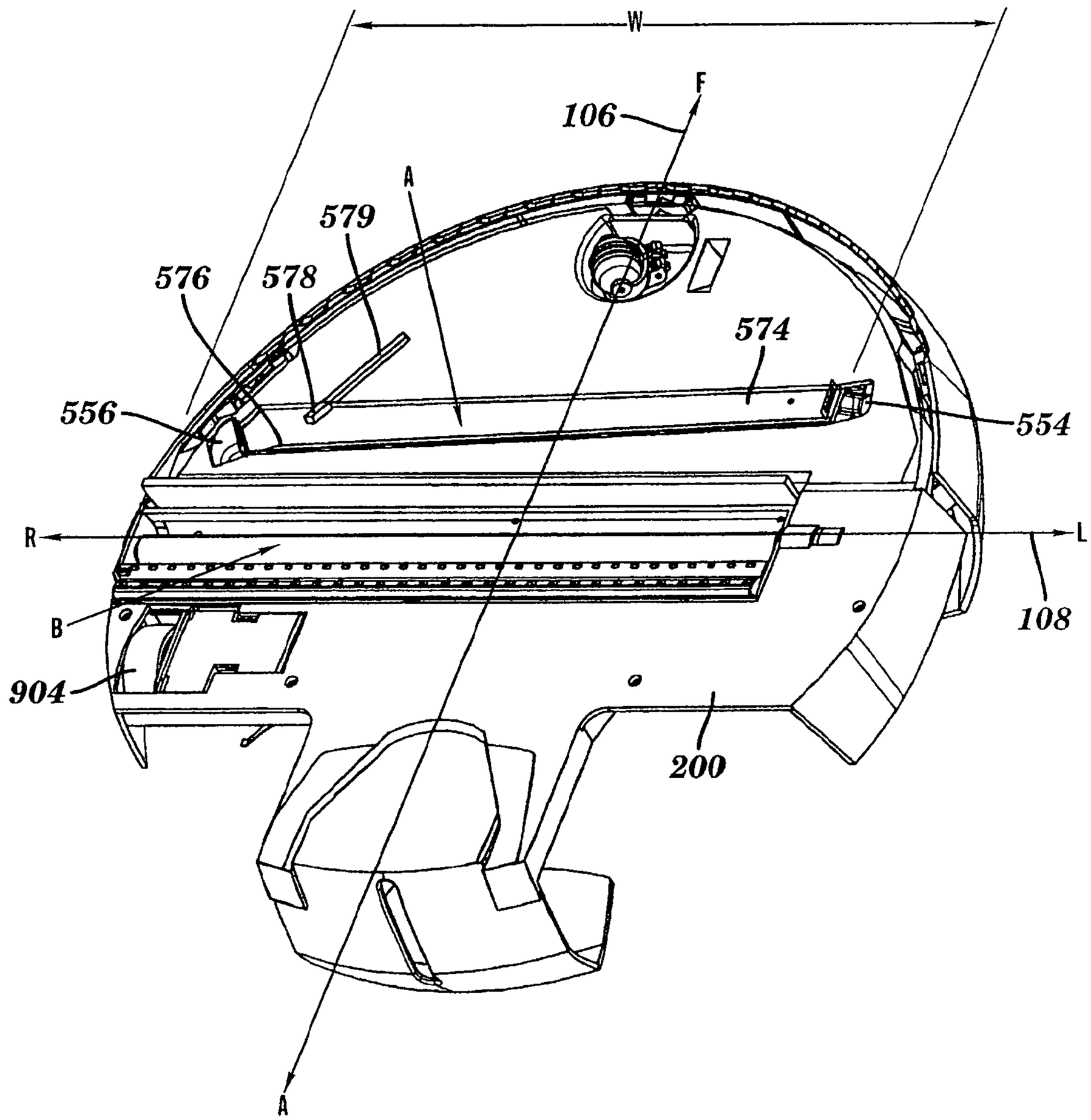

FIG. 2

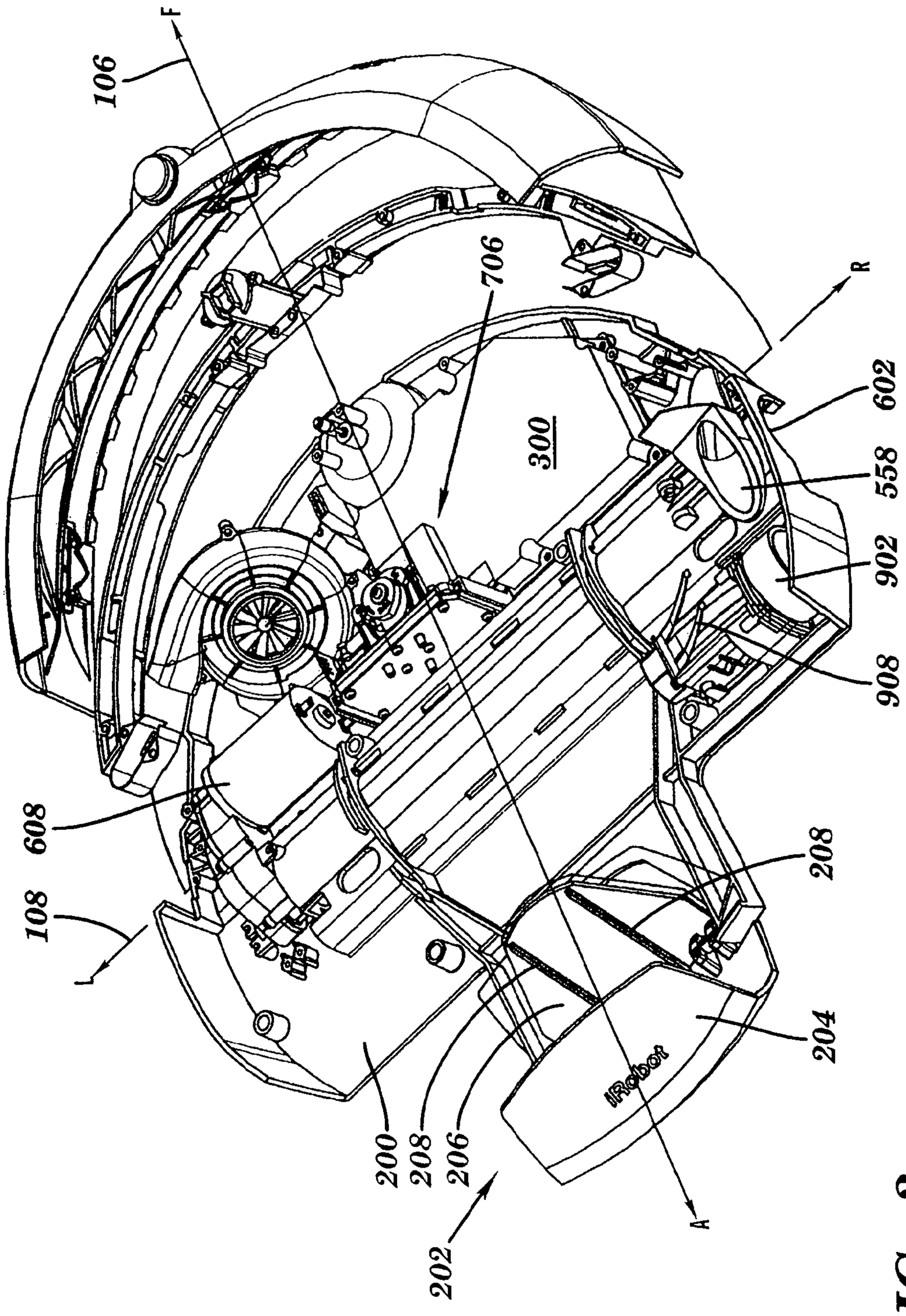
106
F
706
R
300
602
558
902
908
608
208
108
204
iRobot
200
208
206
202
A

FIG. 3

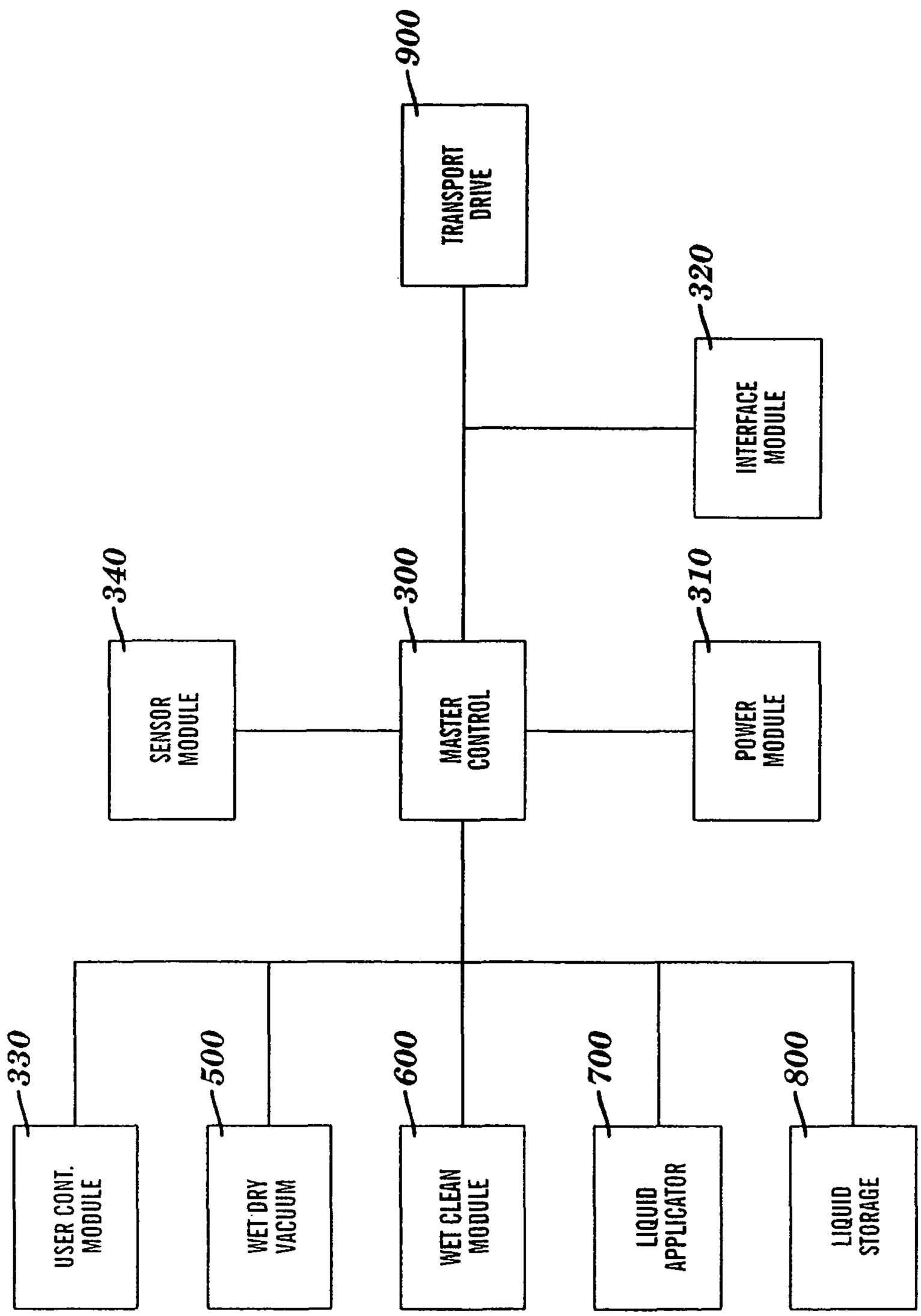
900
TRANSPORT DRIVE
320
INTERFACE MODULE
340
SENSOR MODULE
300
MASTER CONTROL
310
POWER MODULE
330
USER CONT. MODULE
500
WET DRY VACUUM
600
WET CLEAN MODULE
700
LIQUID APPLICATOR
800
LIQUID STORAGE

FIG. 4

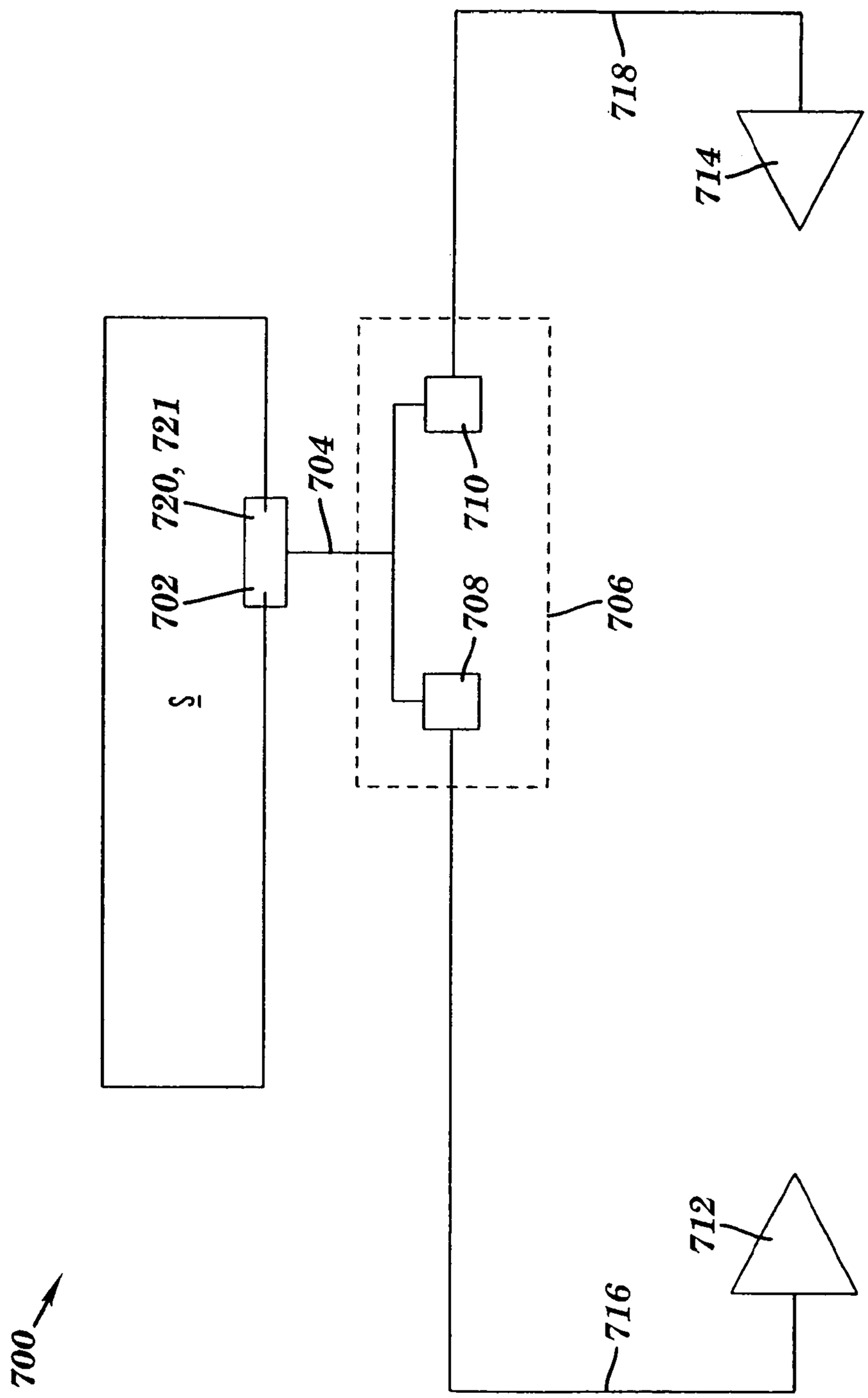

FIG. 5

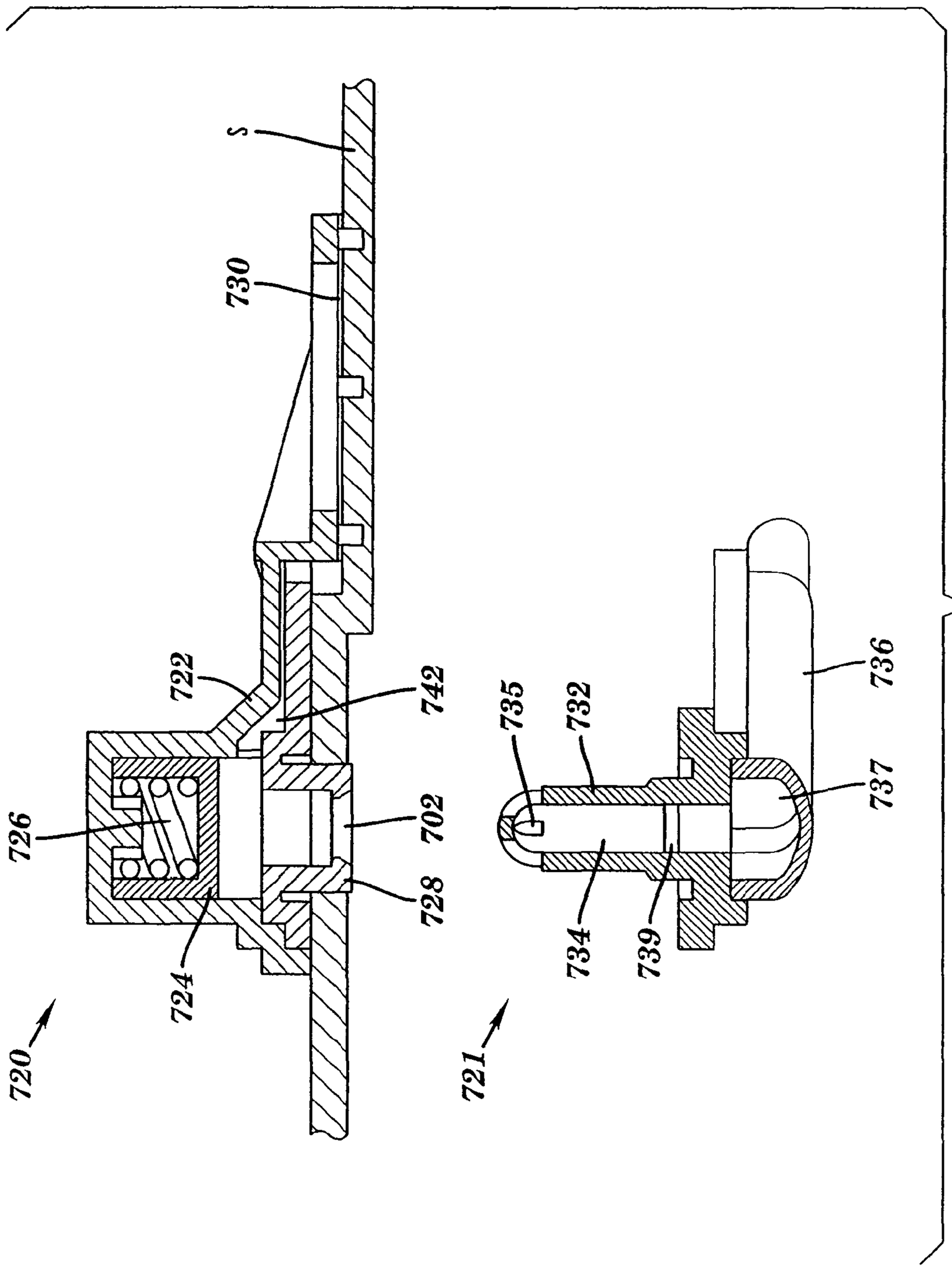

FIG. 6

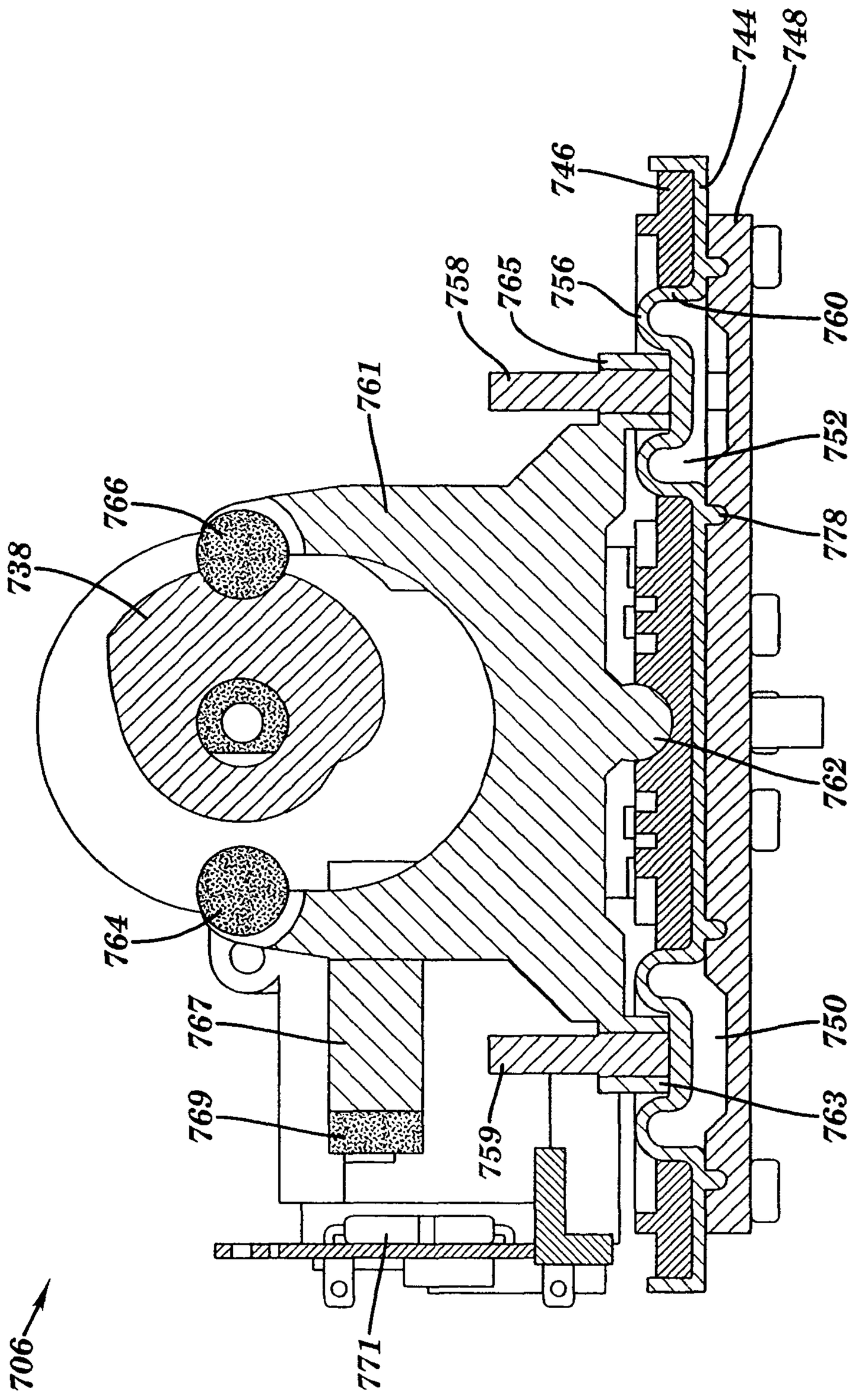
744
748
746
758
765
756
760
761
752
766
738
778
762
764
767
750
769
759
763
771
706

FIG. 7

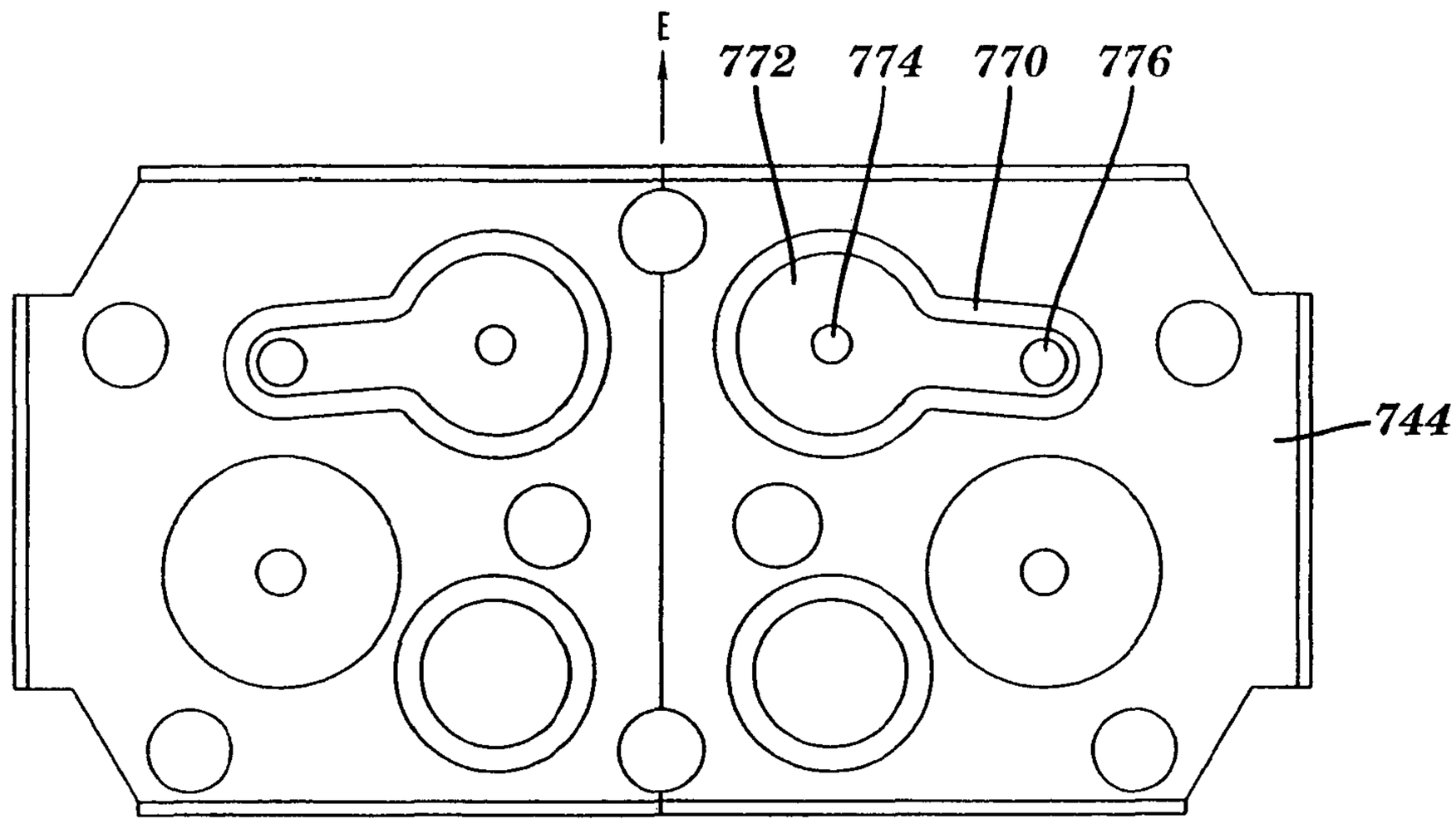

FIG. 8

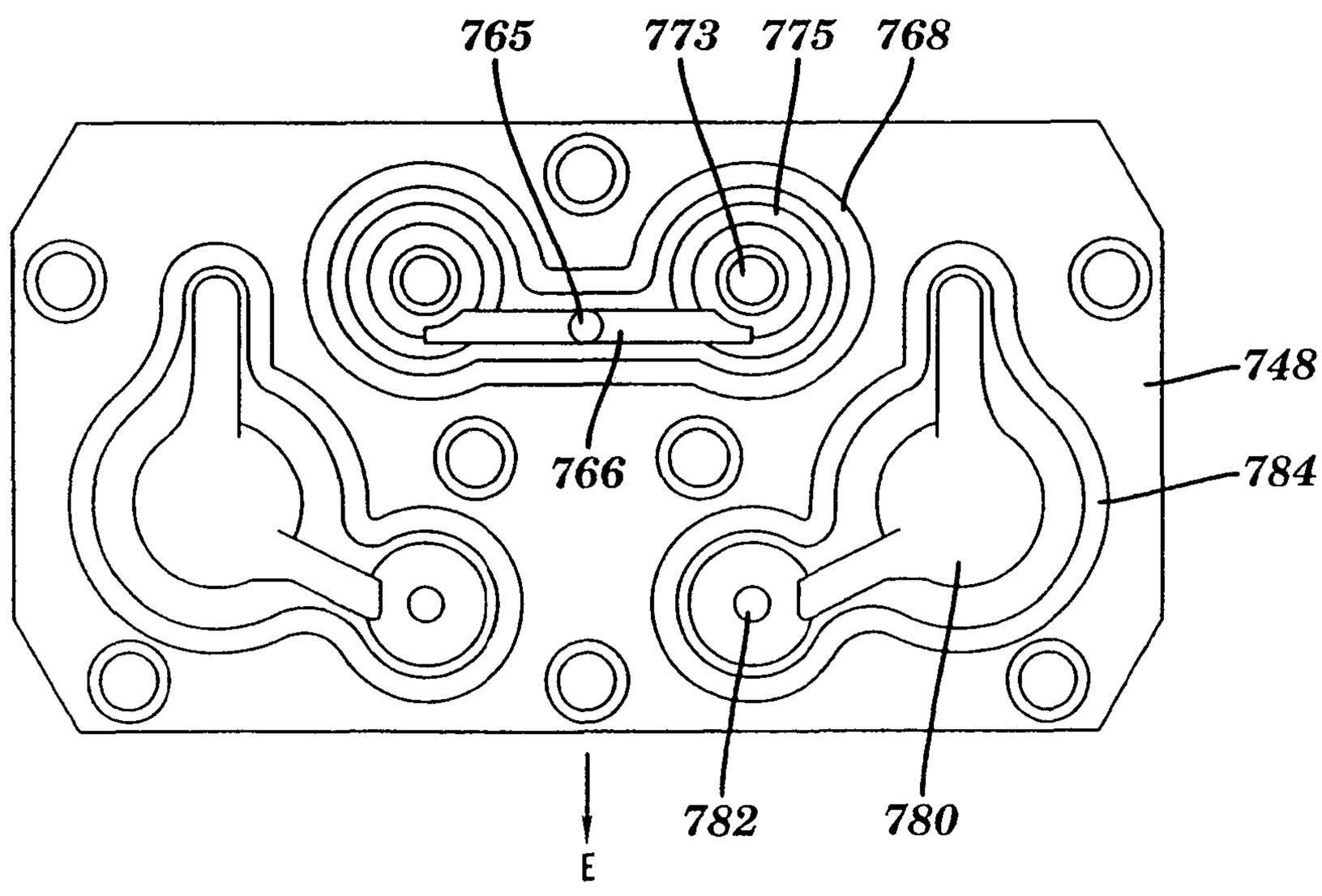

FIG. 9

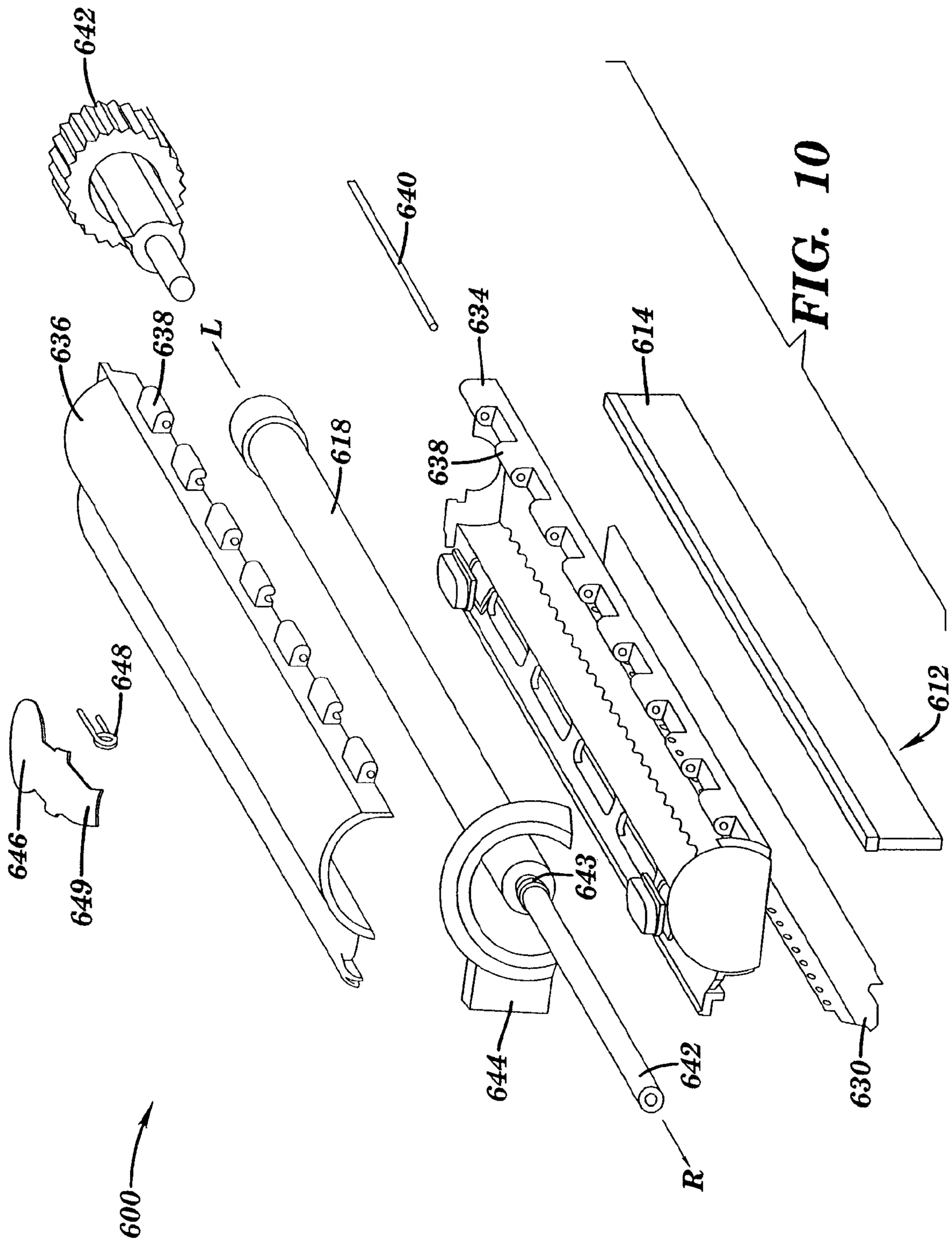
642
640
636
638
L
618
634
638
614
612
648
646
649
643
644
642
630
R
600

FIG. 10

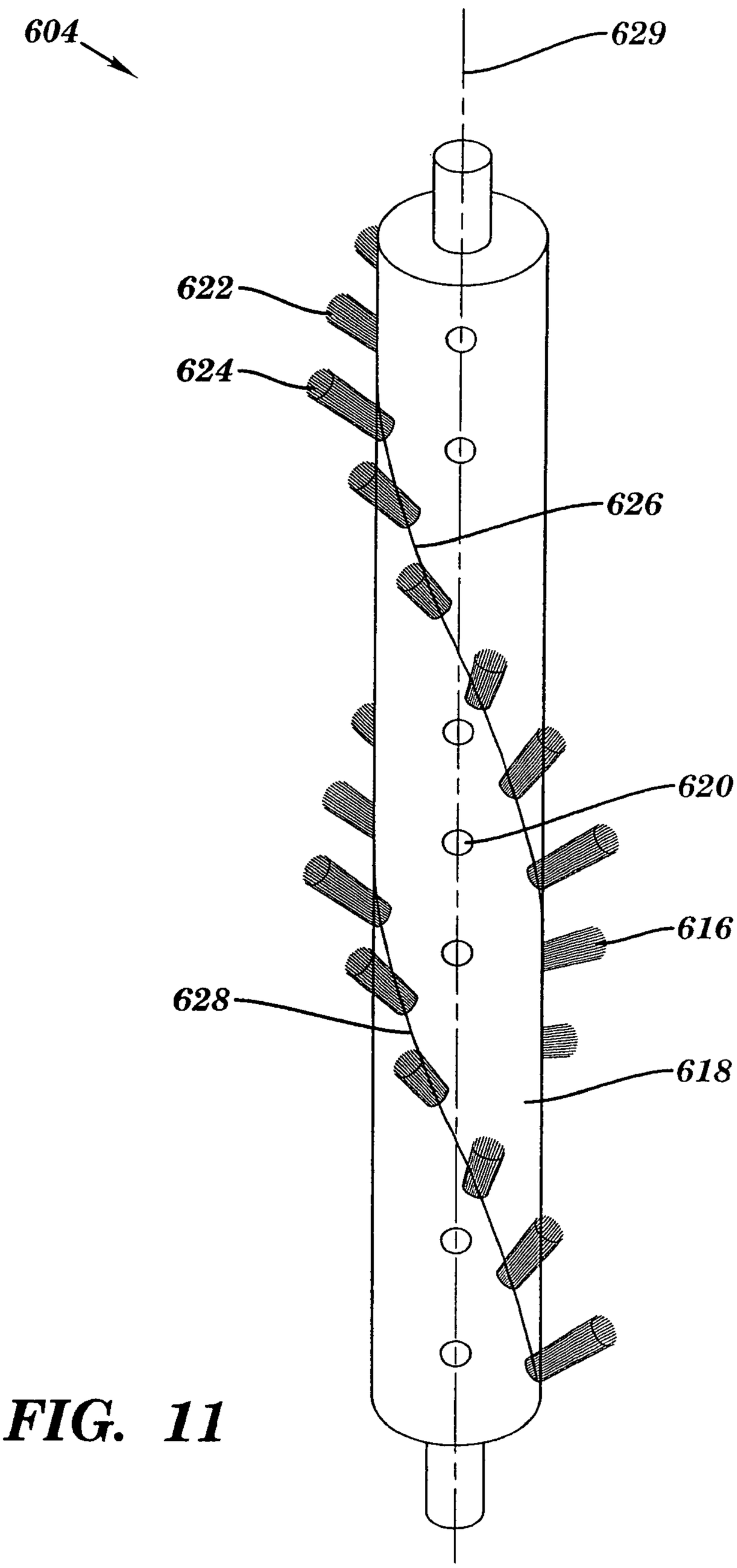

FIG. 11

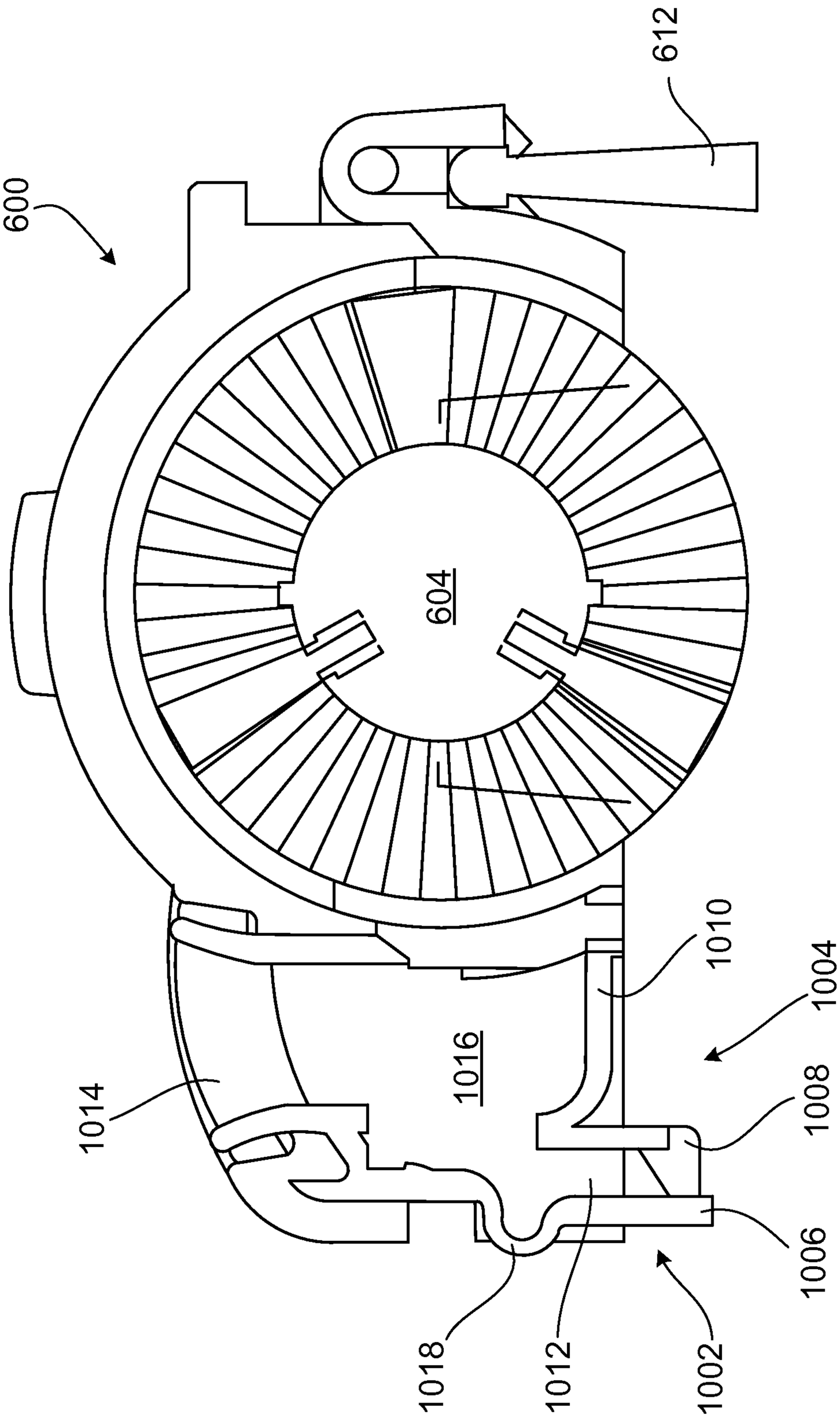

FIG. 12A

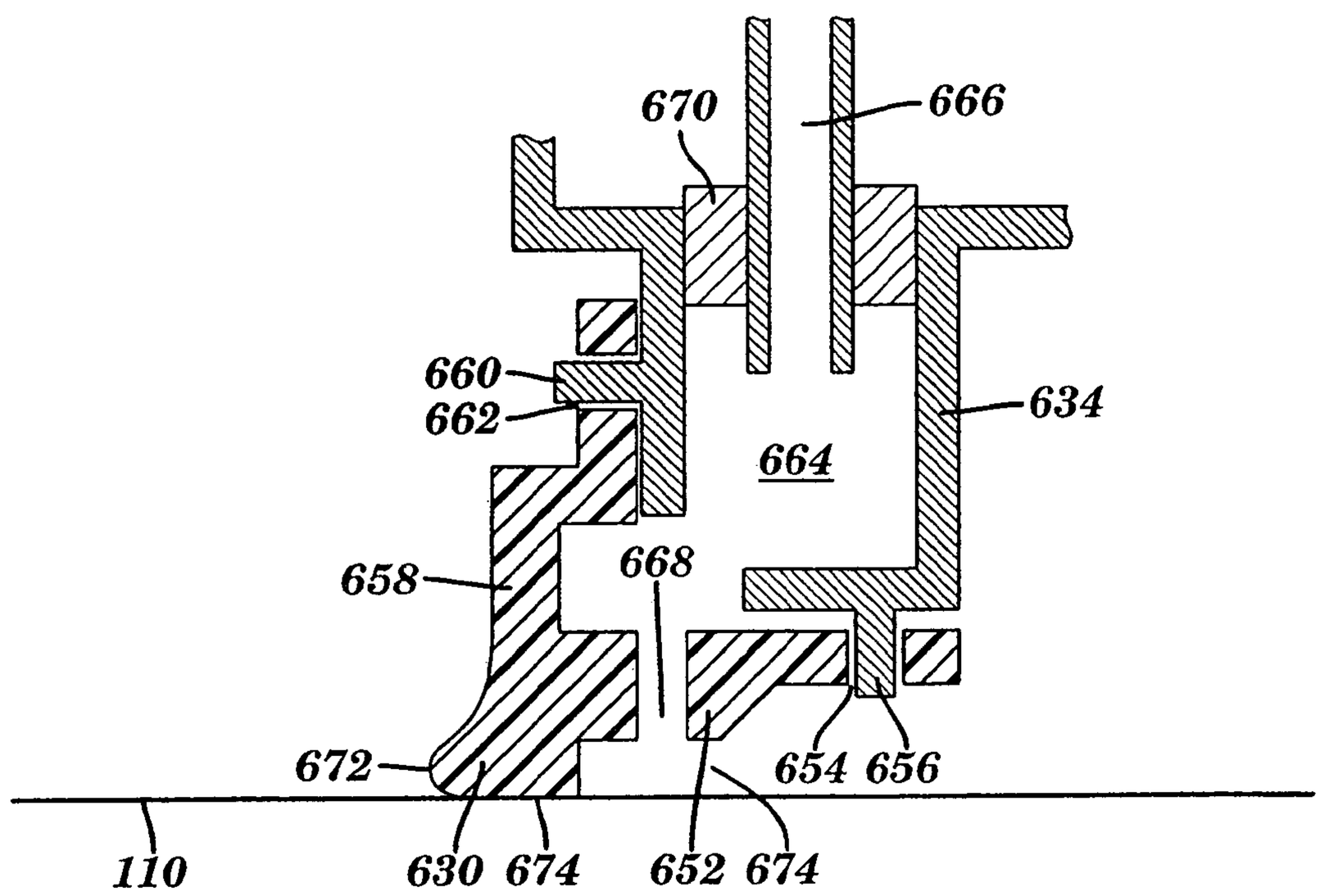

FIG. 12B

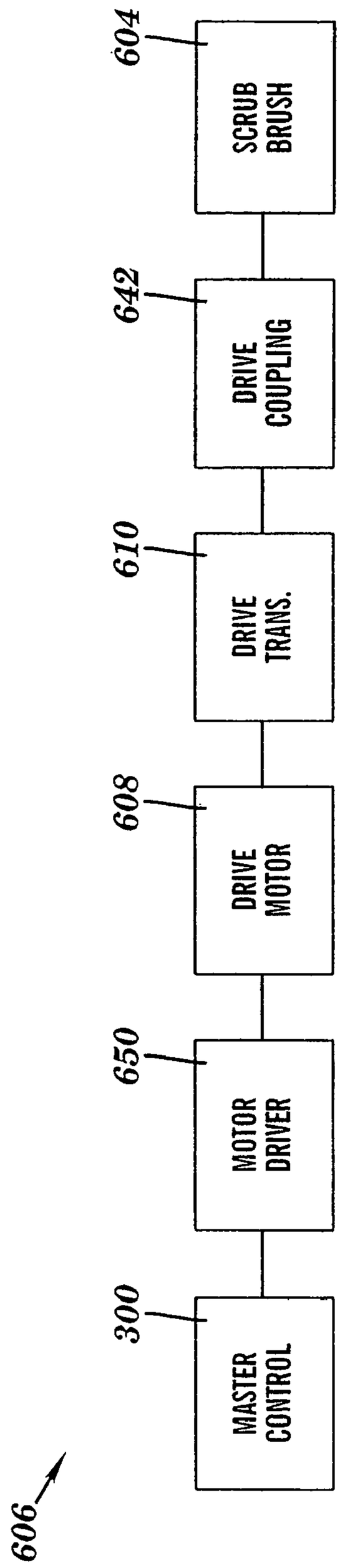
606
300
MASTER CONTROL
650
MOTOR DRIVER
608
DRIVE MOTOR
610
DRIVE TRANS.
642
DRIVE COUPLING
604
SCRUB BRUSH

FIG. 13

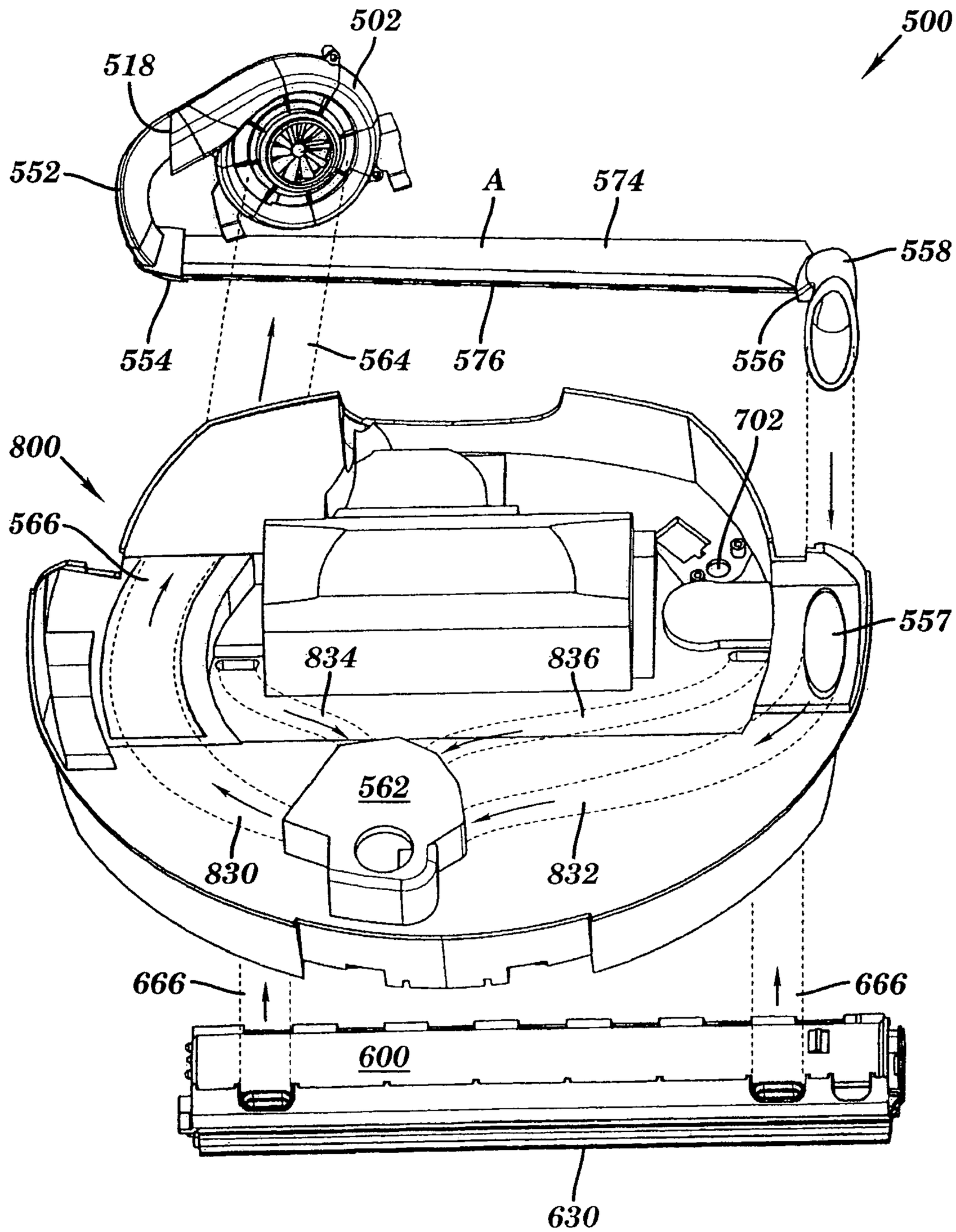
502
500
518
552
A
574
558
554
564
576
556
702
800
566
557
834
836
562
830
832
666
666
600
630

FIG. 14

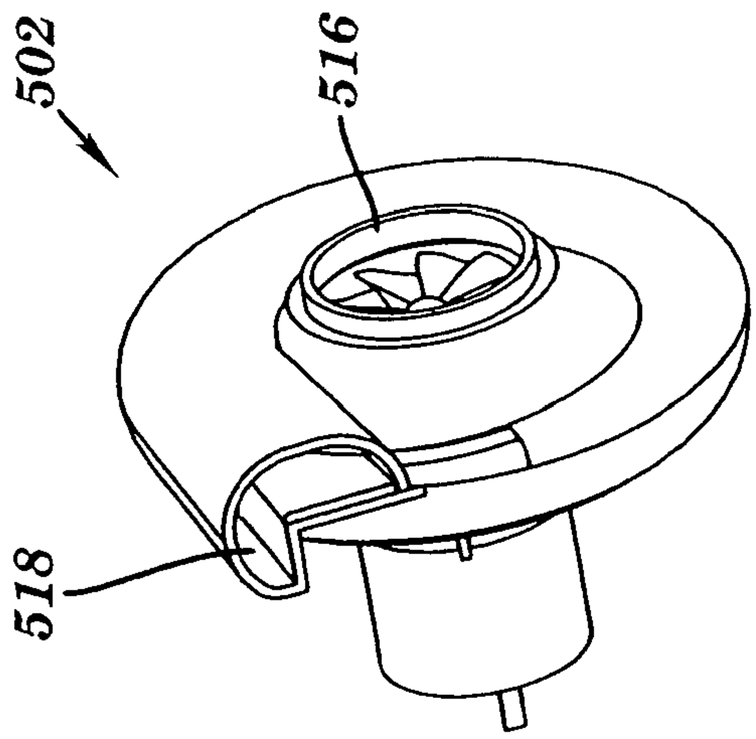

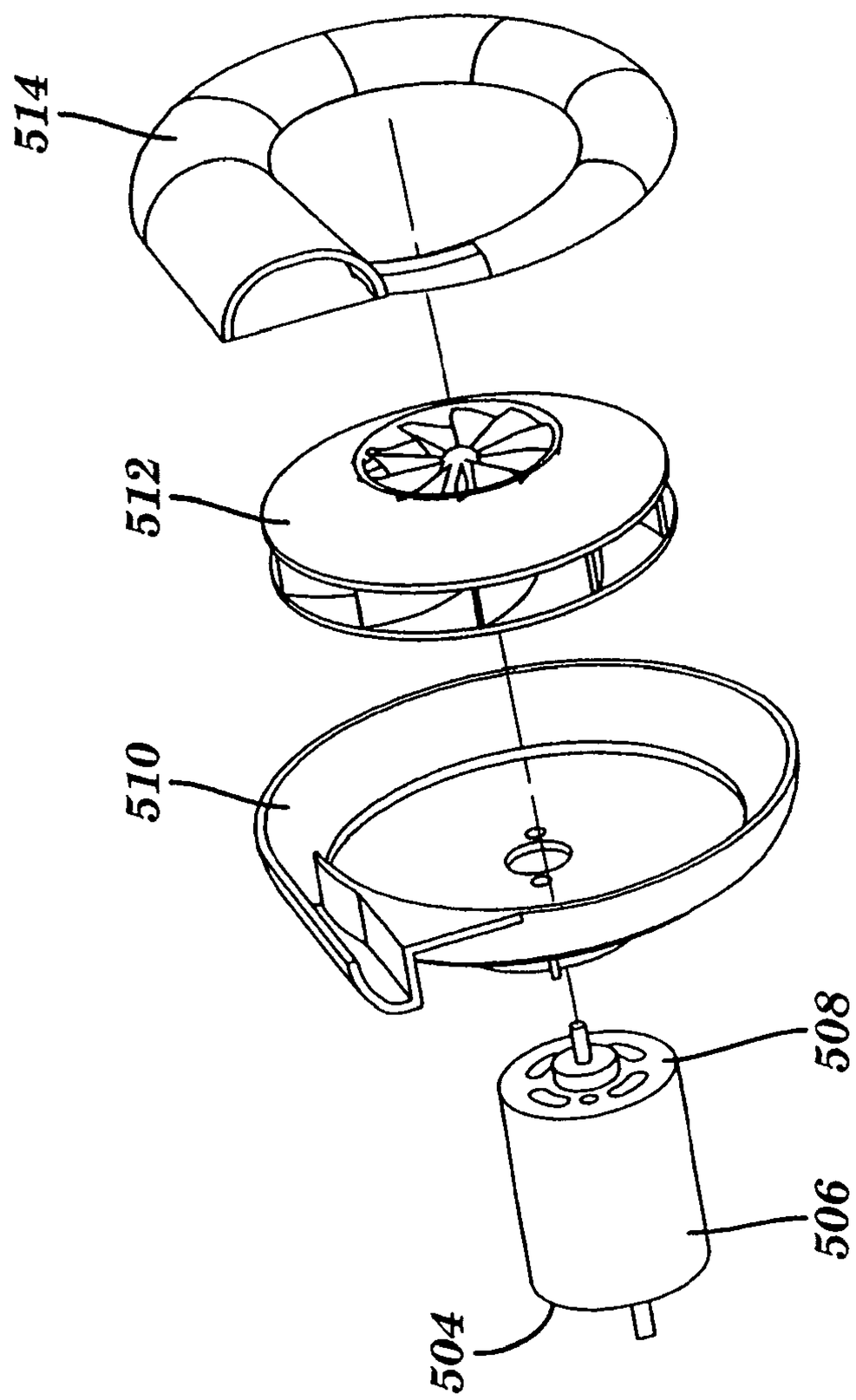

FIG. 15

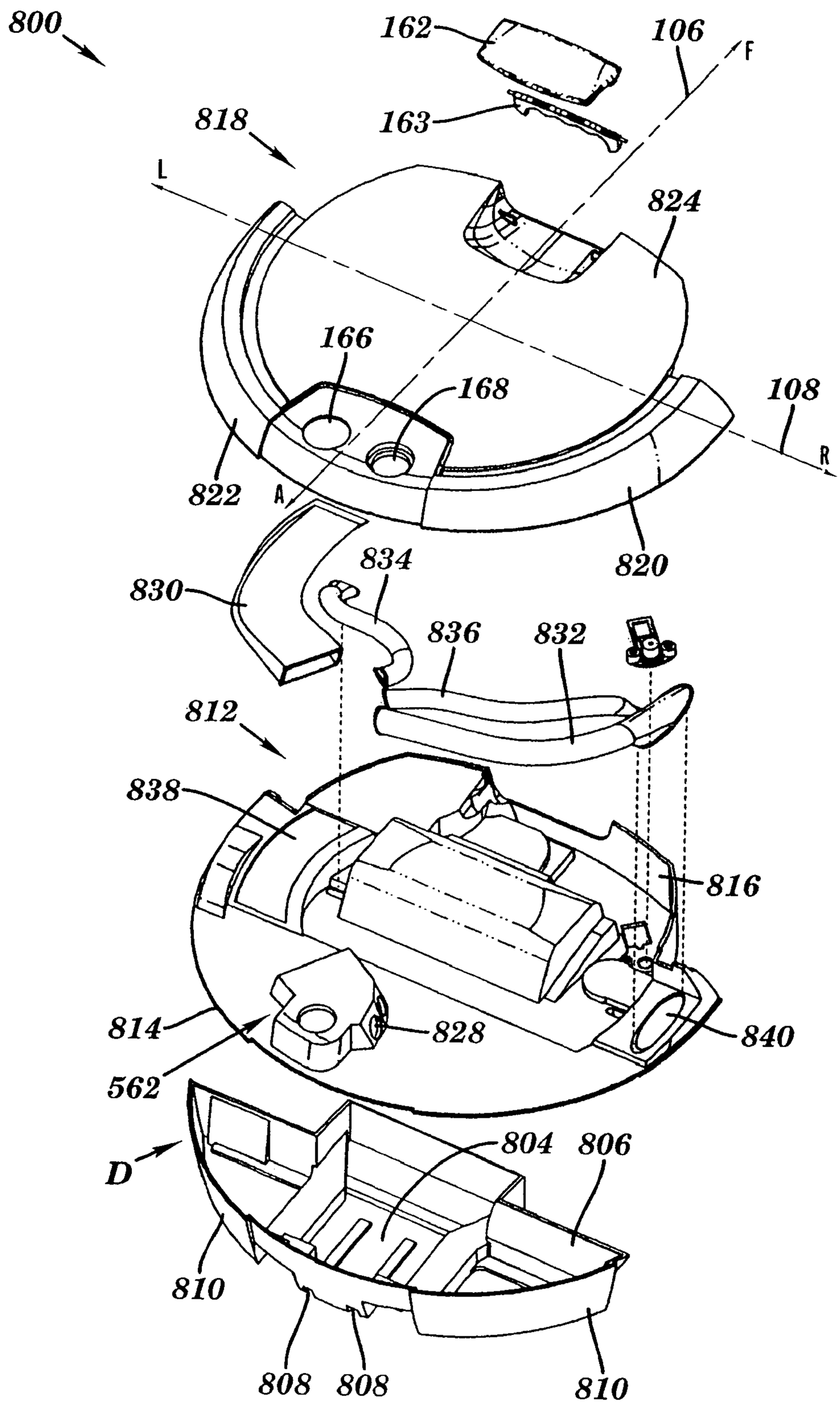
800
162
106
F
818
163
L
824
166
168
108
R
822
A
820
834
830
836
832
812
838
816
814
828
840
562
804
806
D
810
808
808
810

FIG. 16

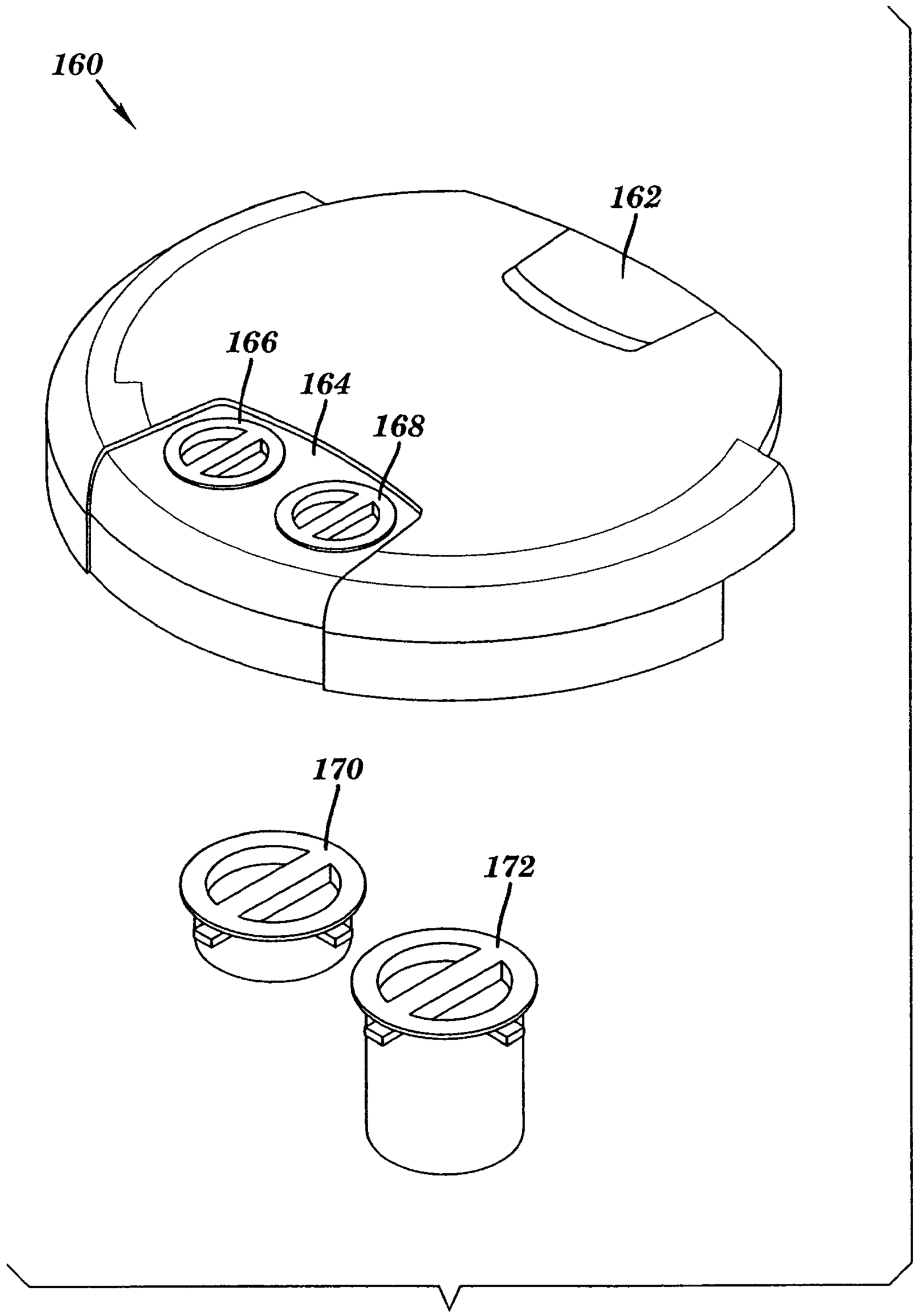

FIG. 17

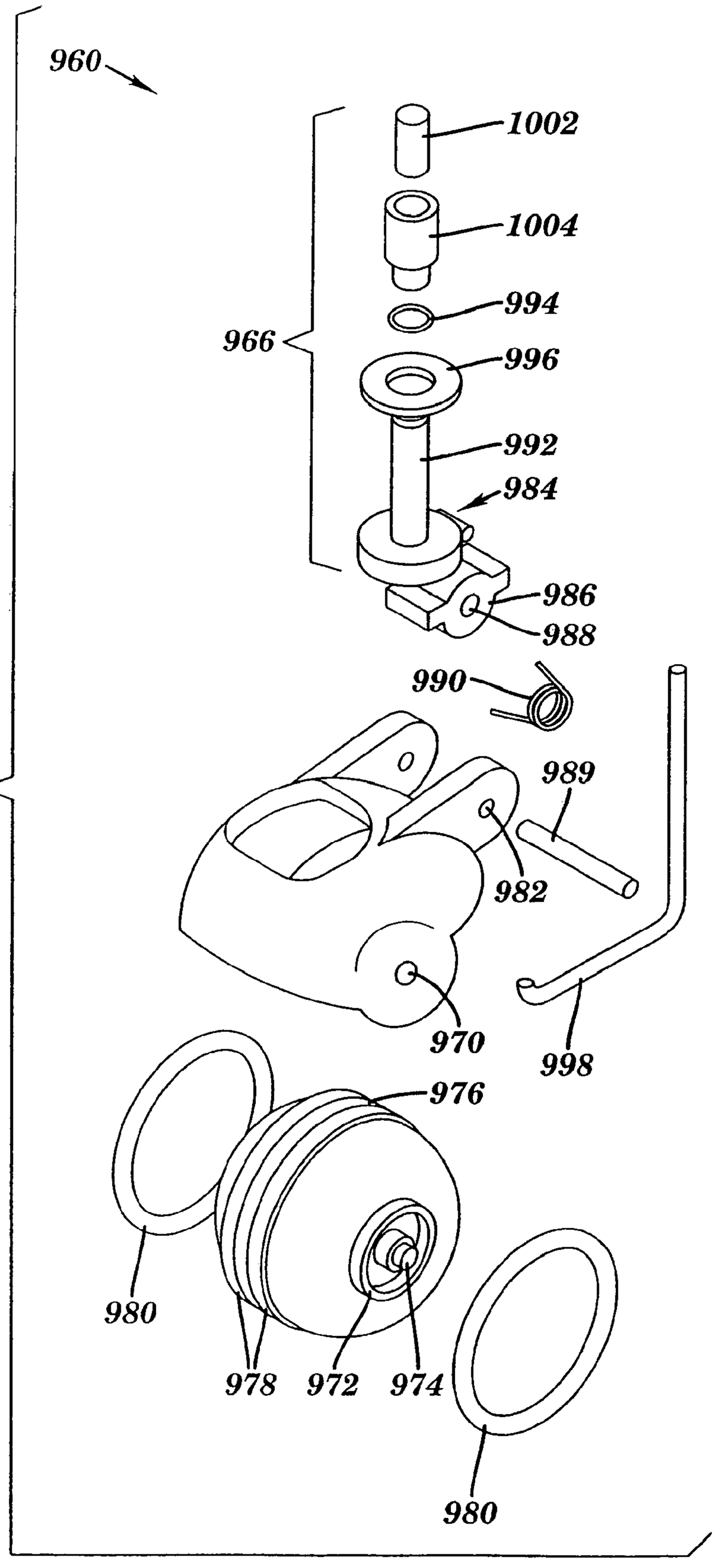
960
1002
1004
994
966
996
992
984
986
988
990
989
982
970
998
976
980
978
972
974
980

FIG. 18

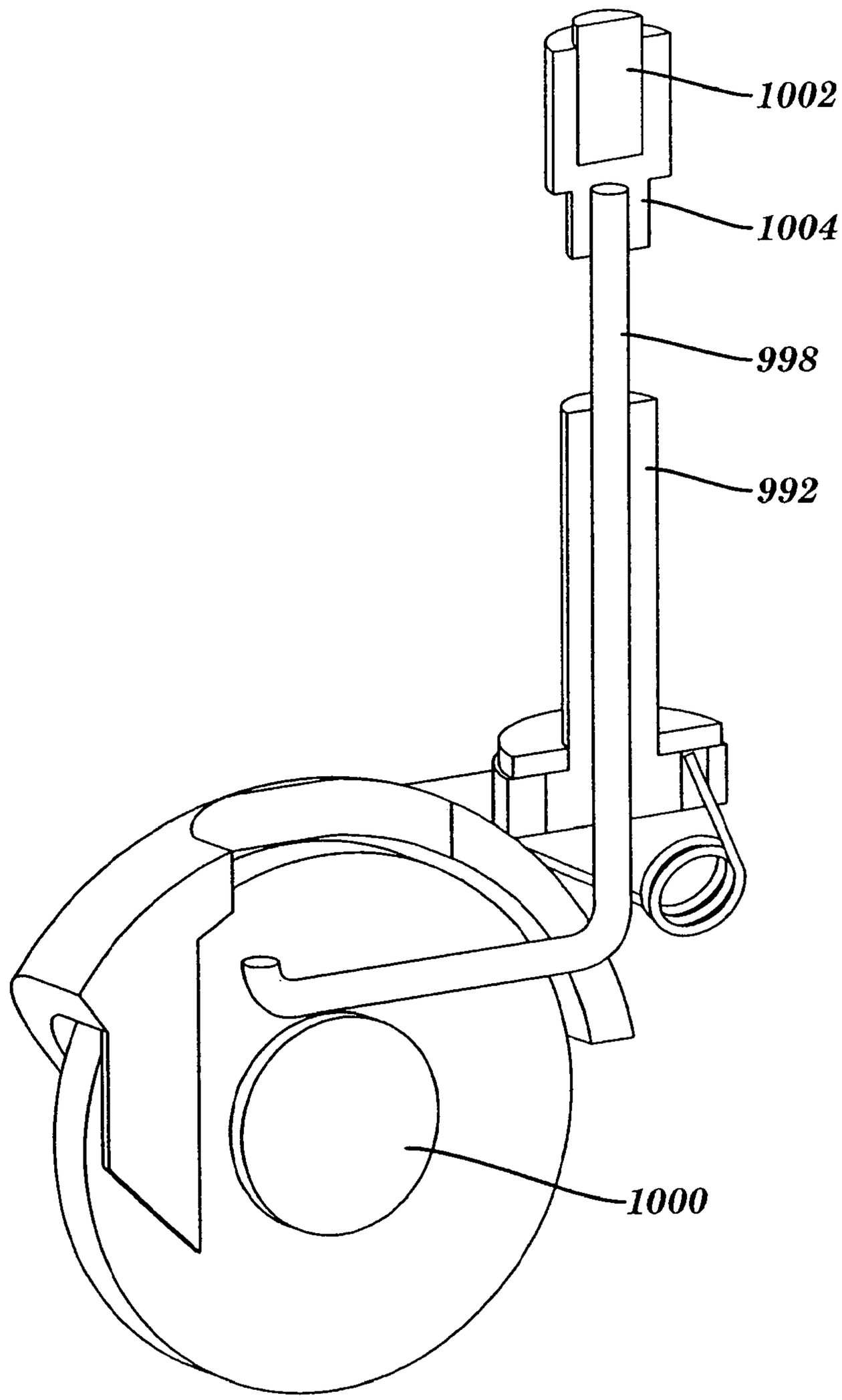

FIG. 19

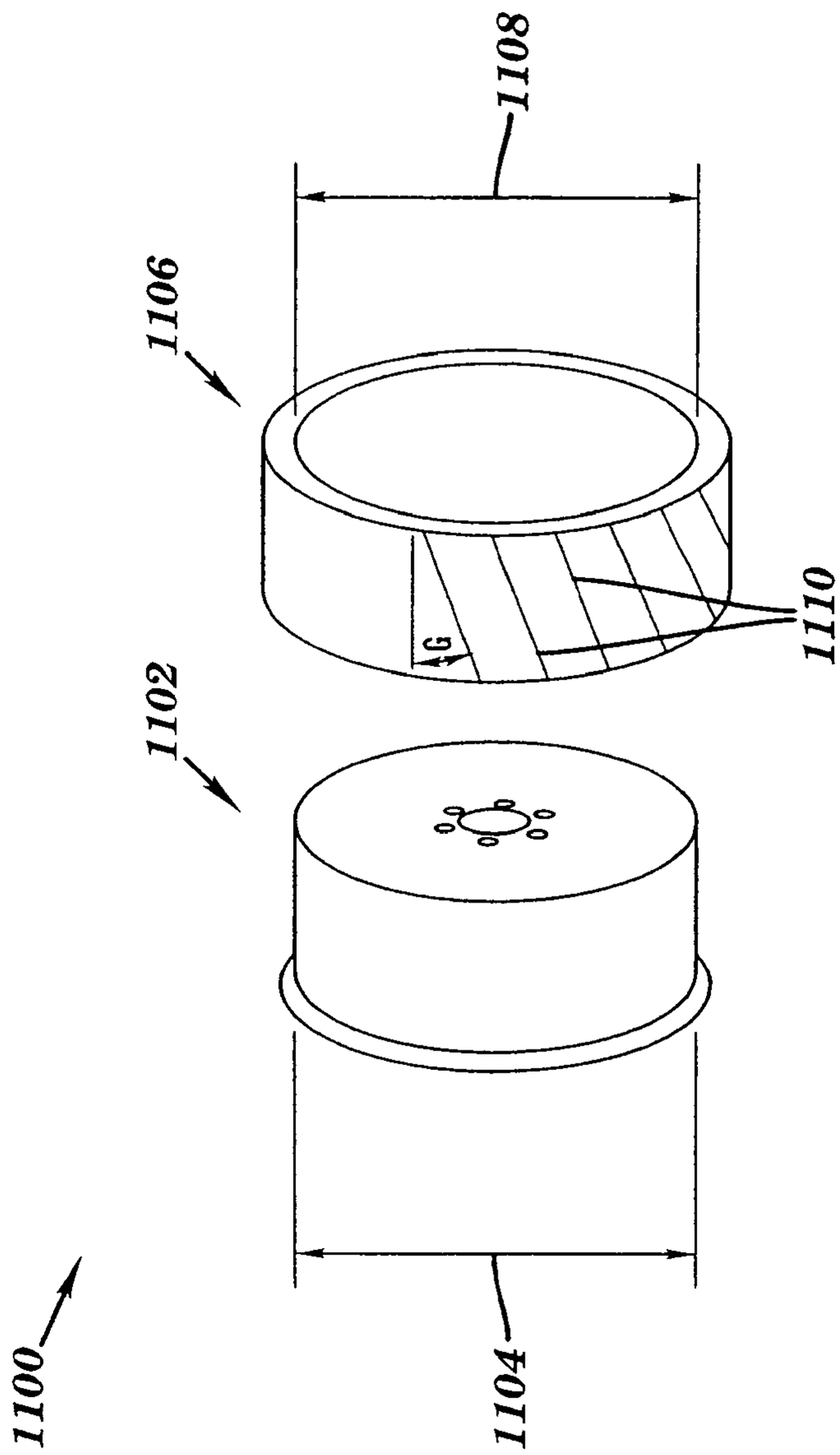

FIG. 20

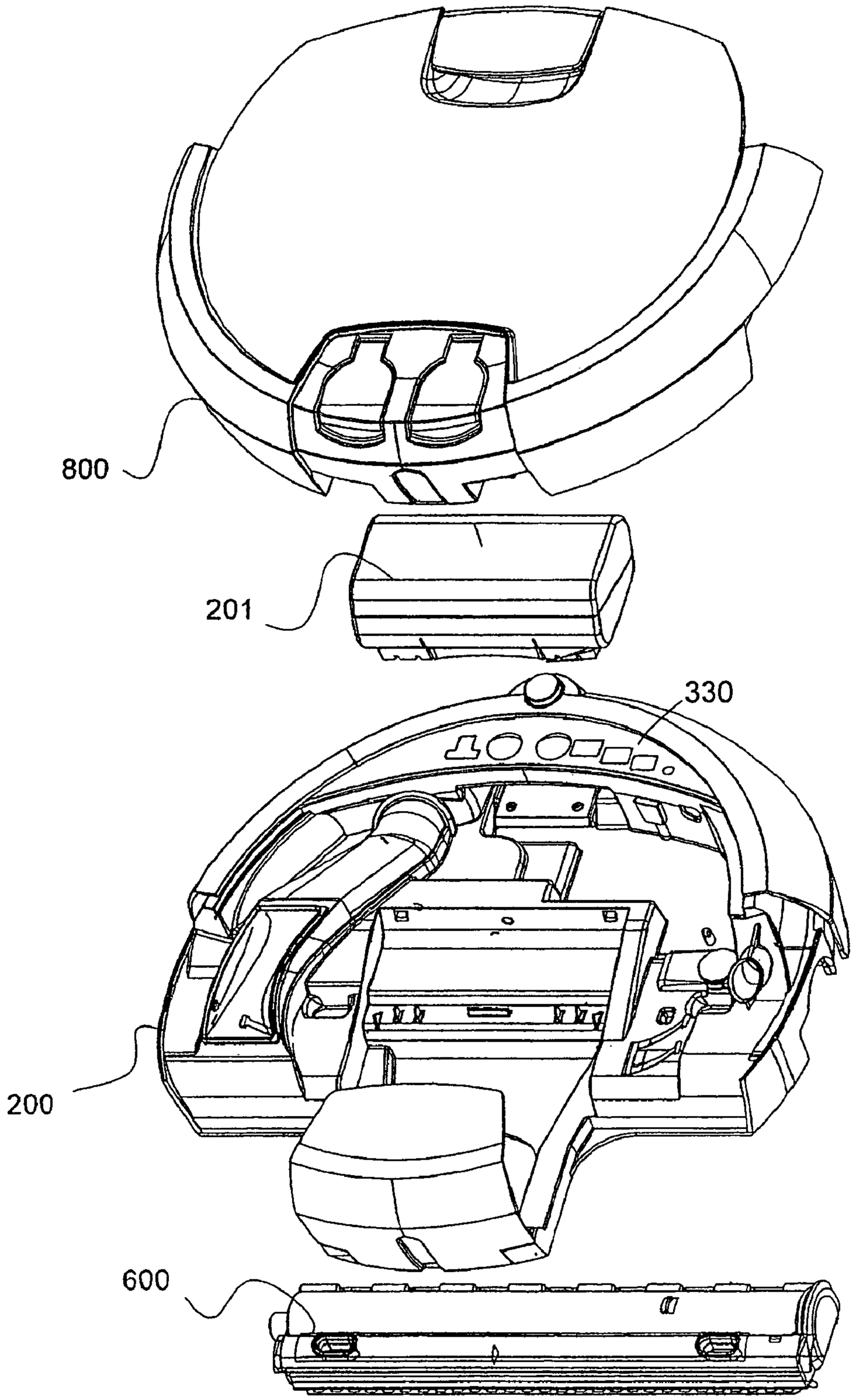

FIG. 21

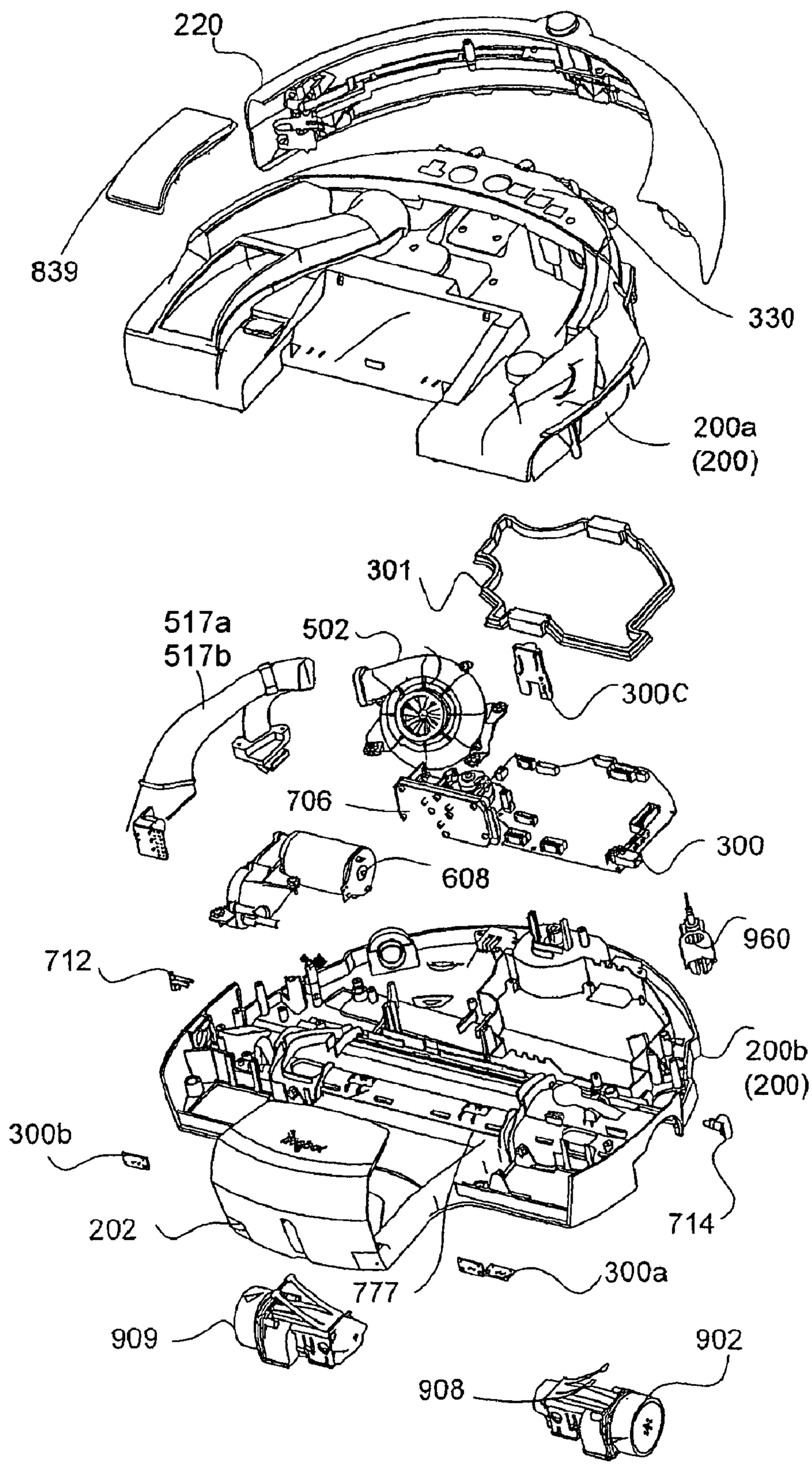
220
839
330
200a
(200)
301
517a
517b
502
300C
706
300
608
960
712
200b
(200)
300b
202
714
777
300a
909
902
908

FIG. 22

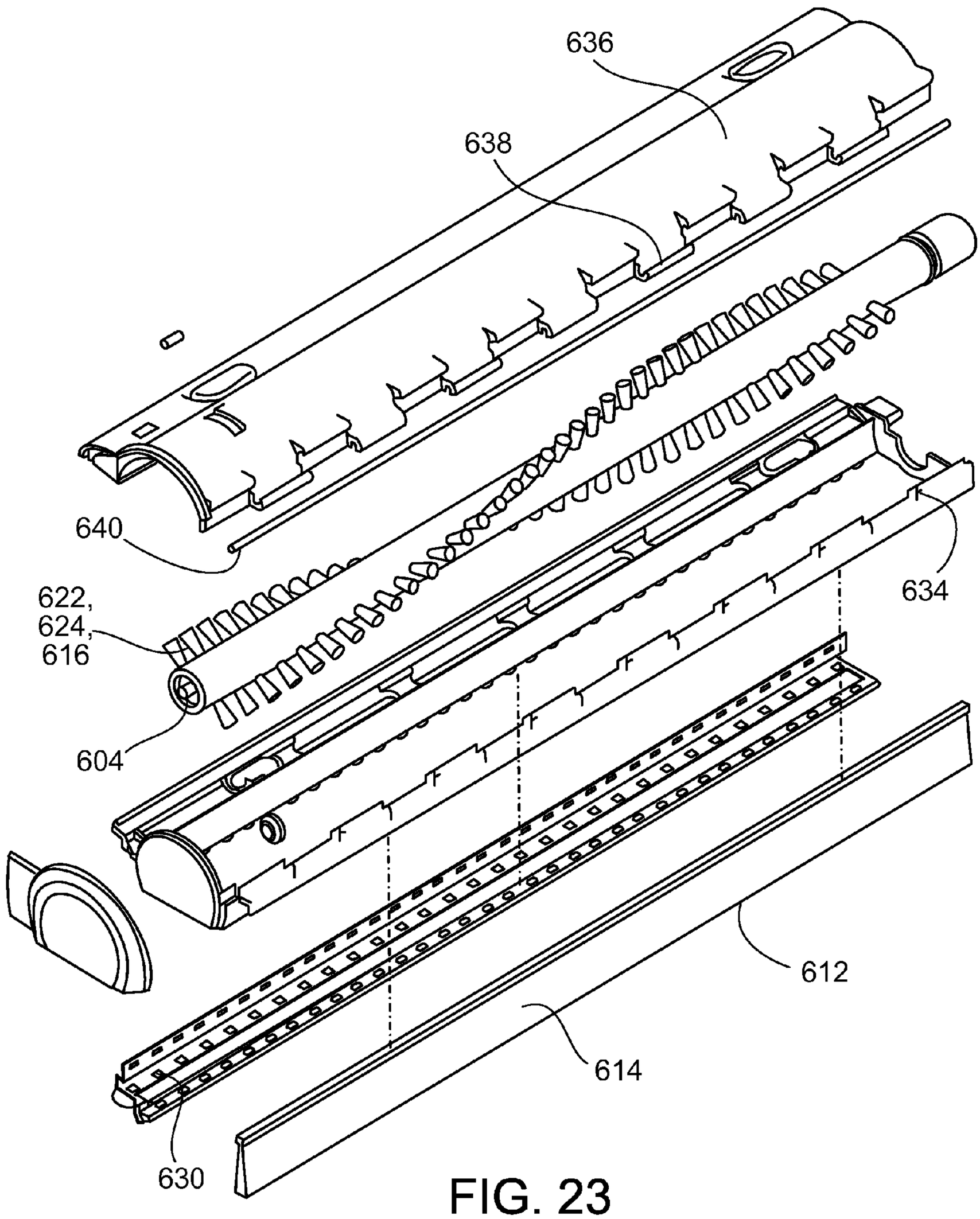

FIG. 23

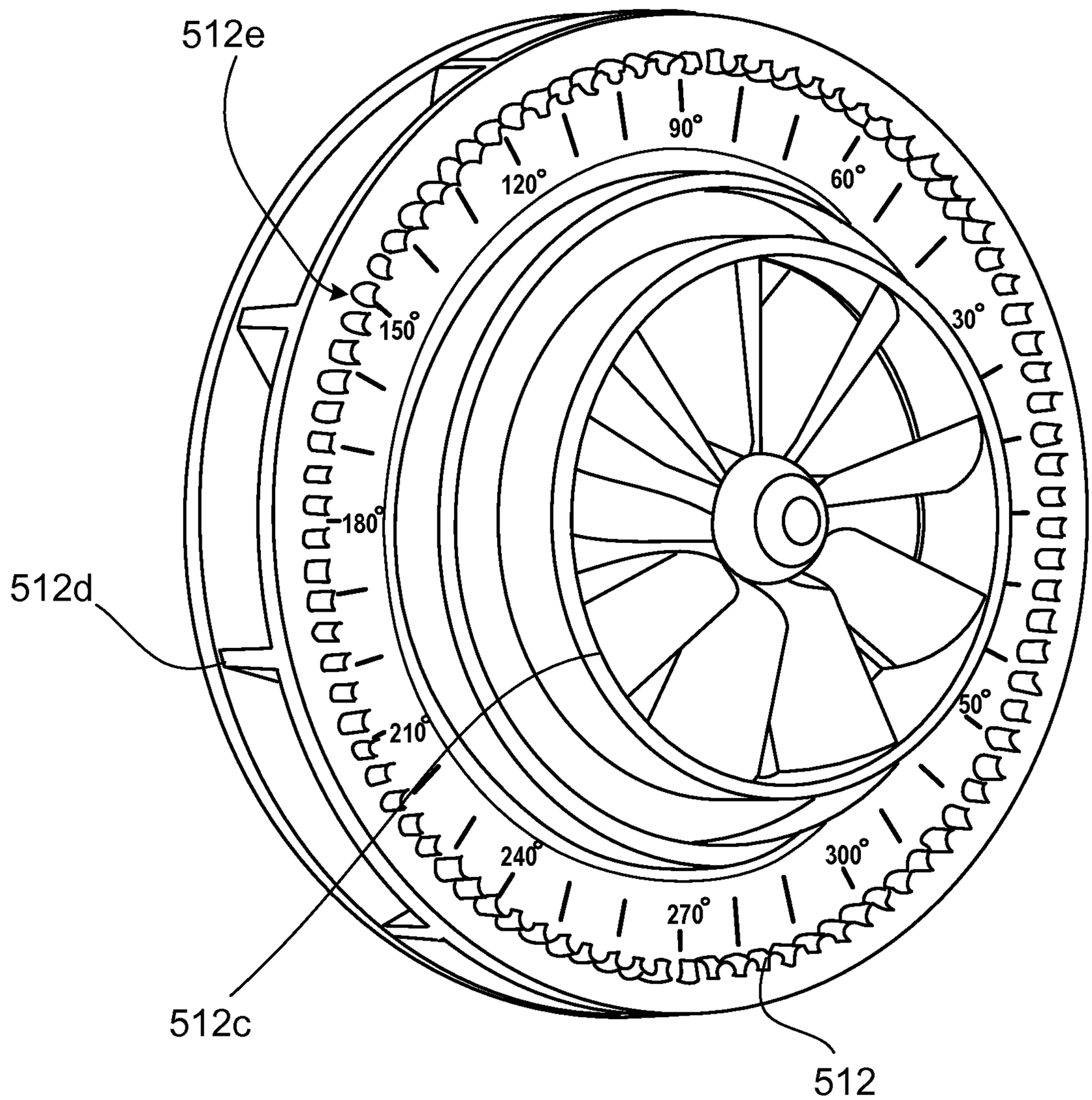

FIG. 24

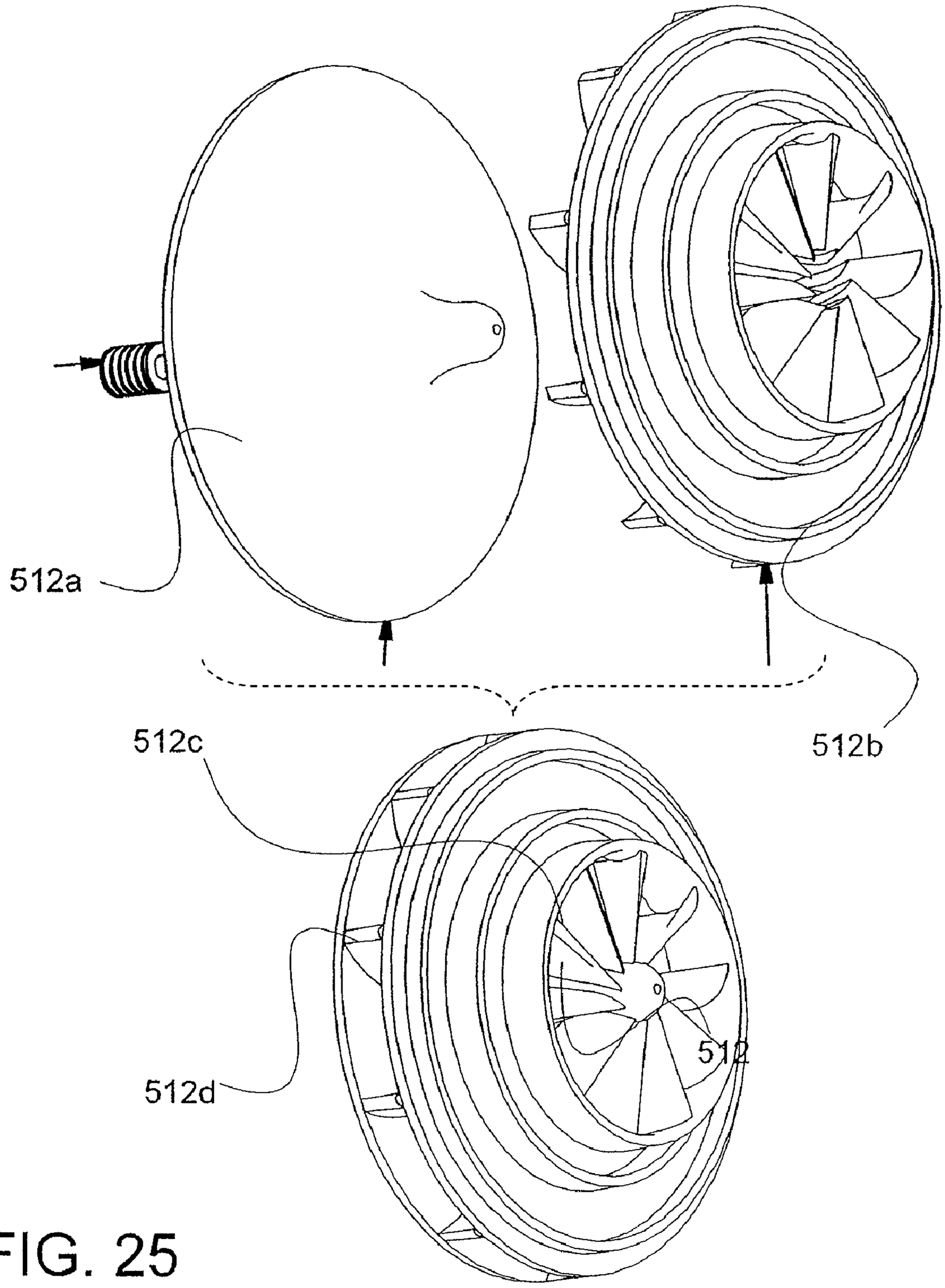

FIG. 25

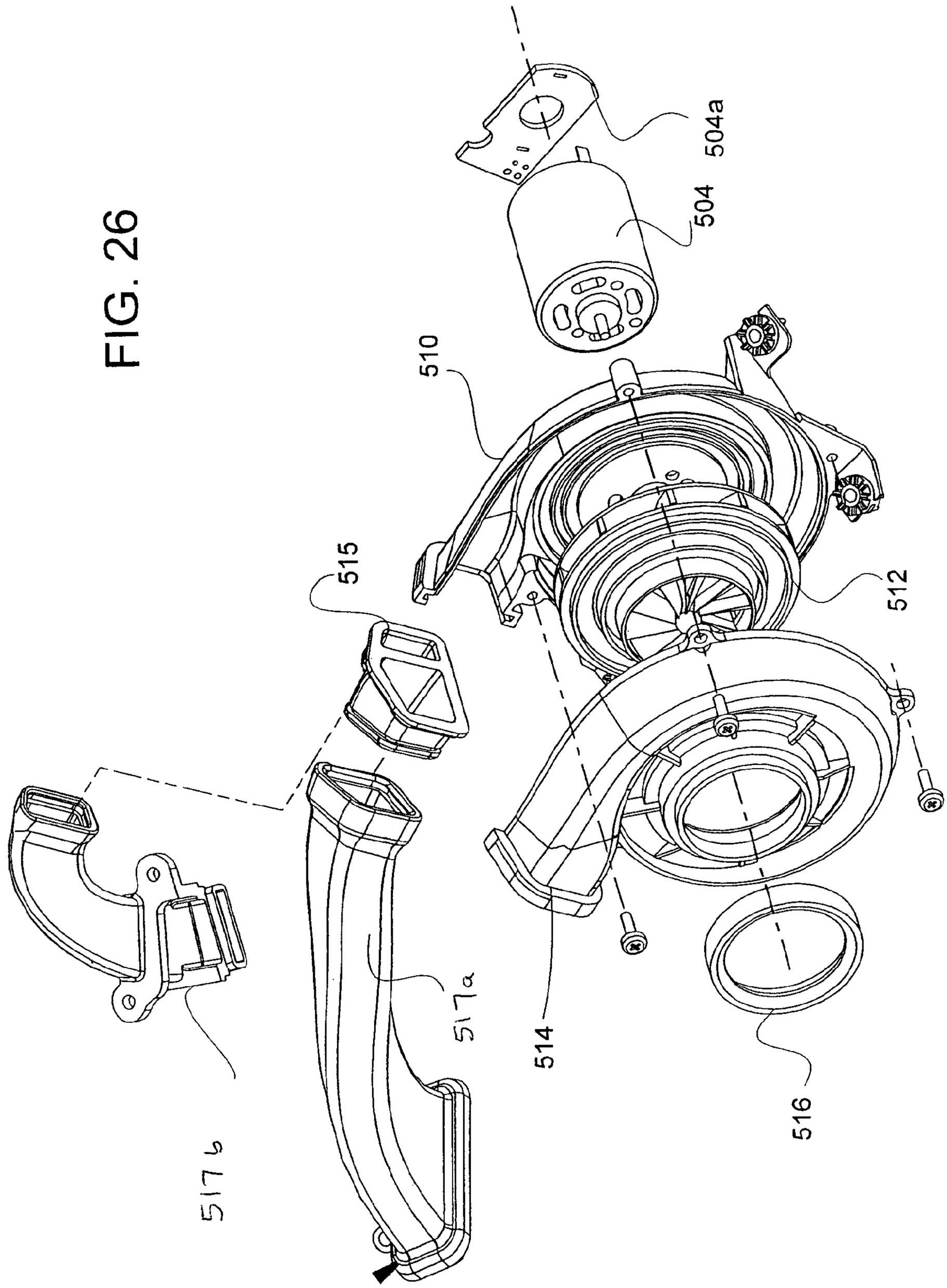

FIG. 26

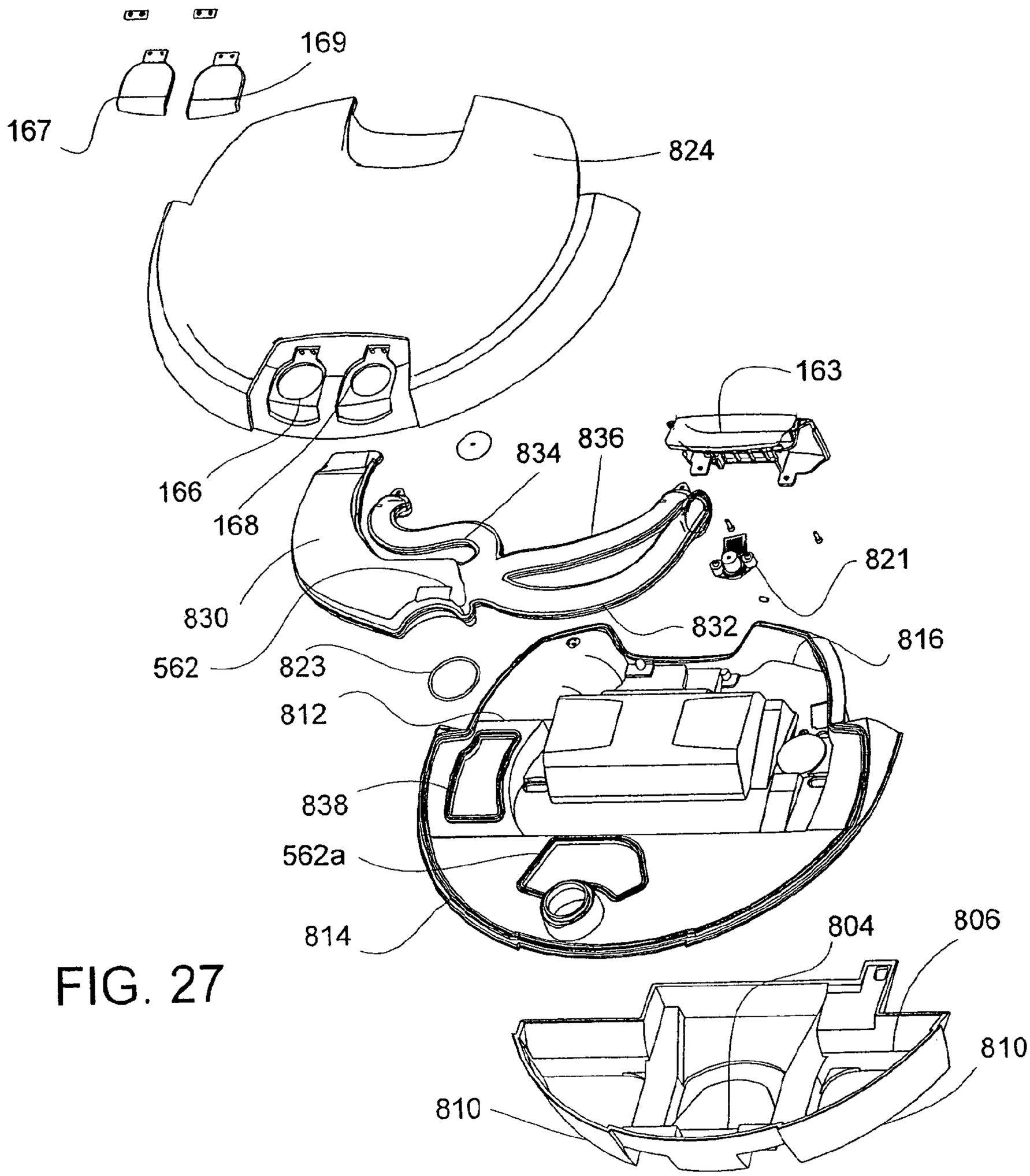
169
167
824
163
166
168
834
836
821
830
832
816
562
823
812
838
562a
814
804
806
810
810

FIG. 27

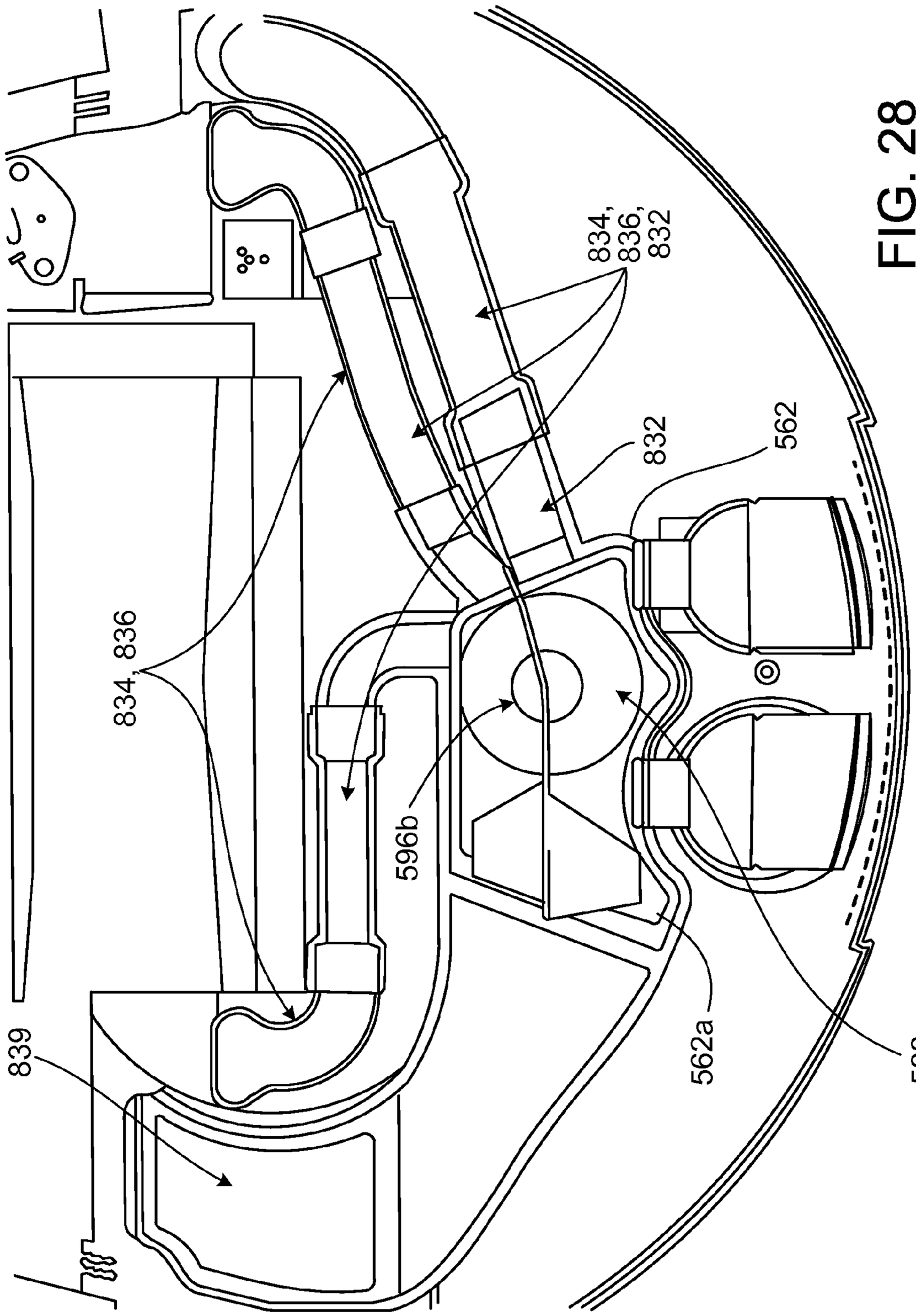

FIG. 28

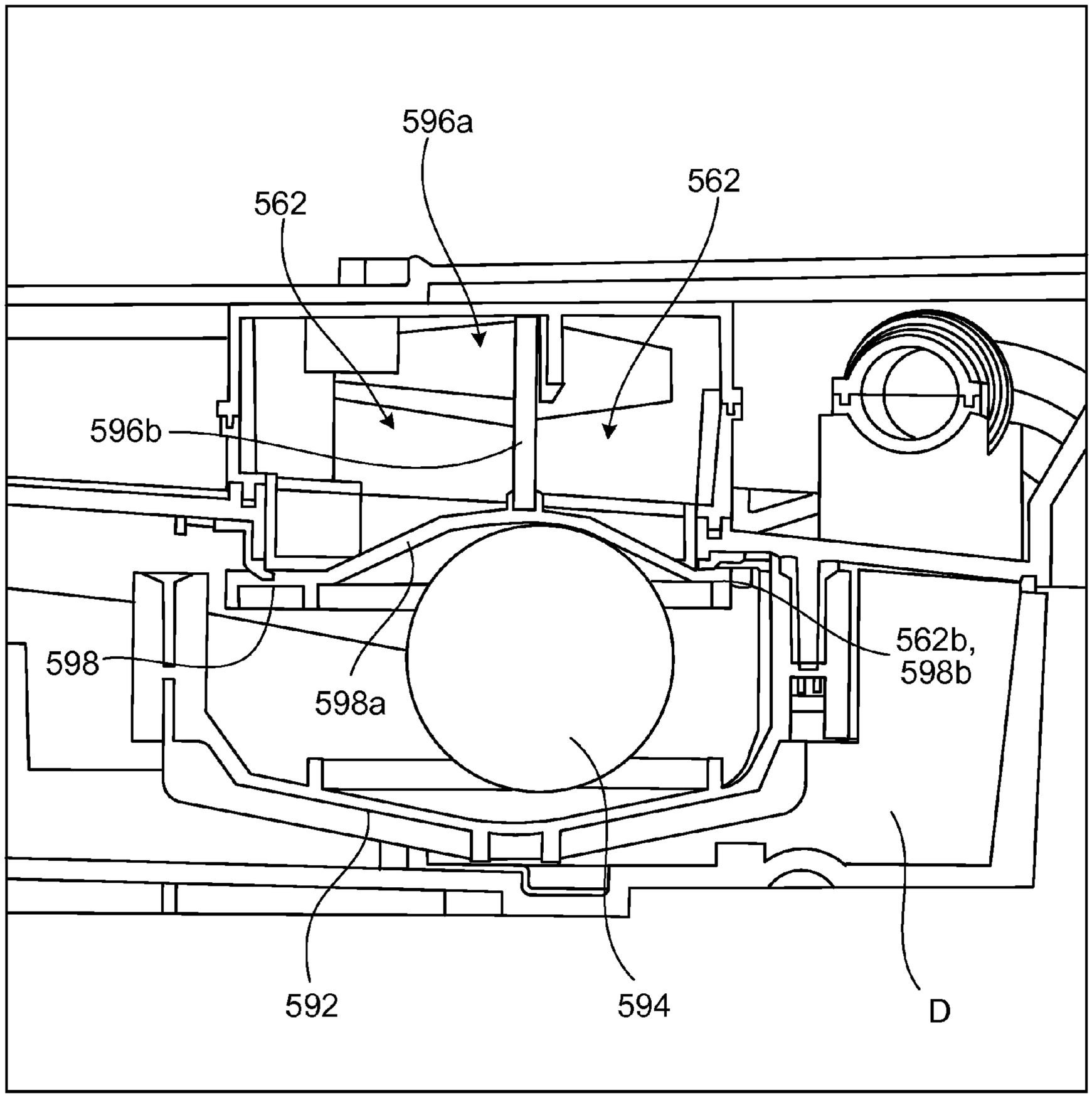

FIG. 29

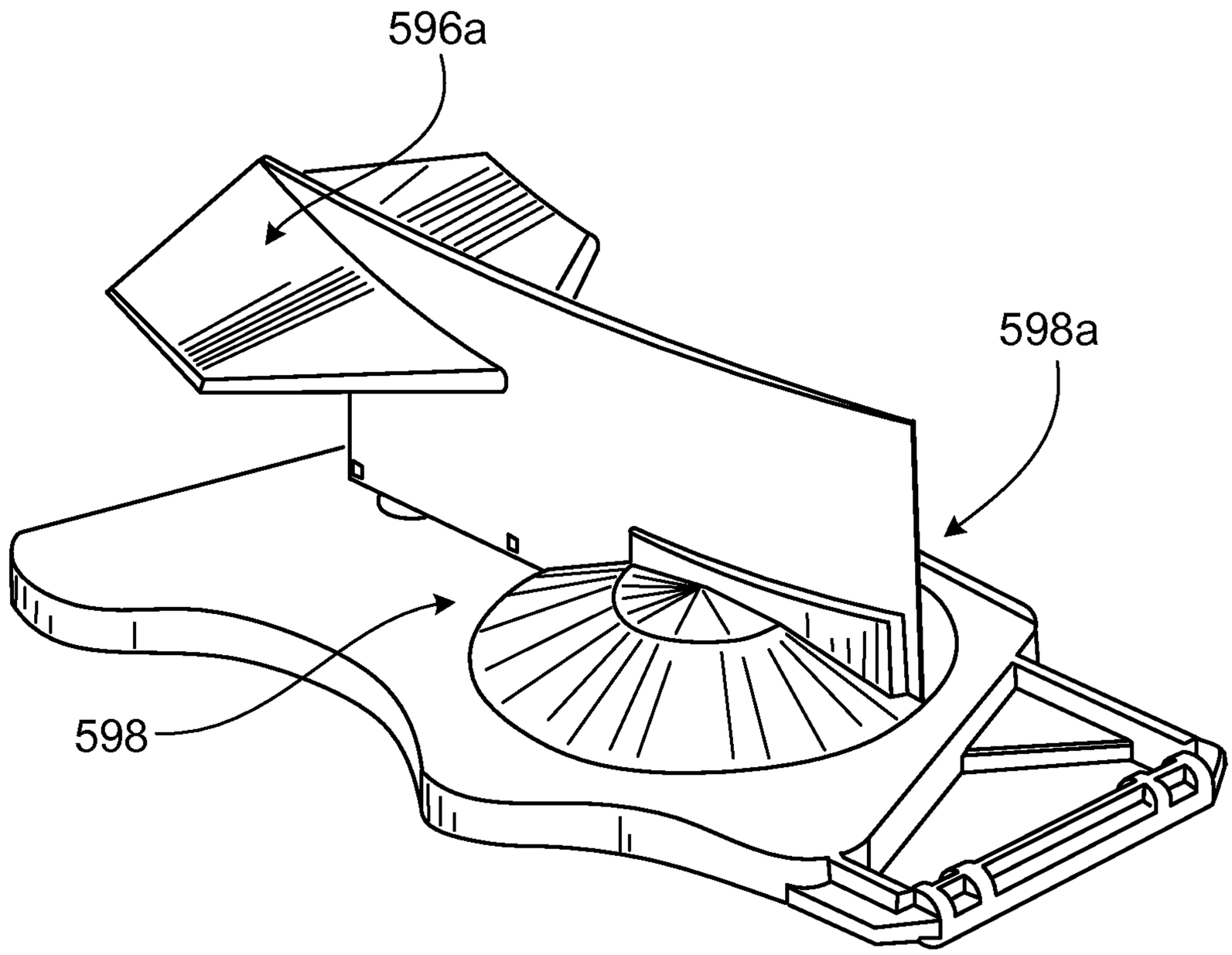

FIG. 30

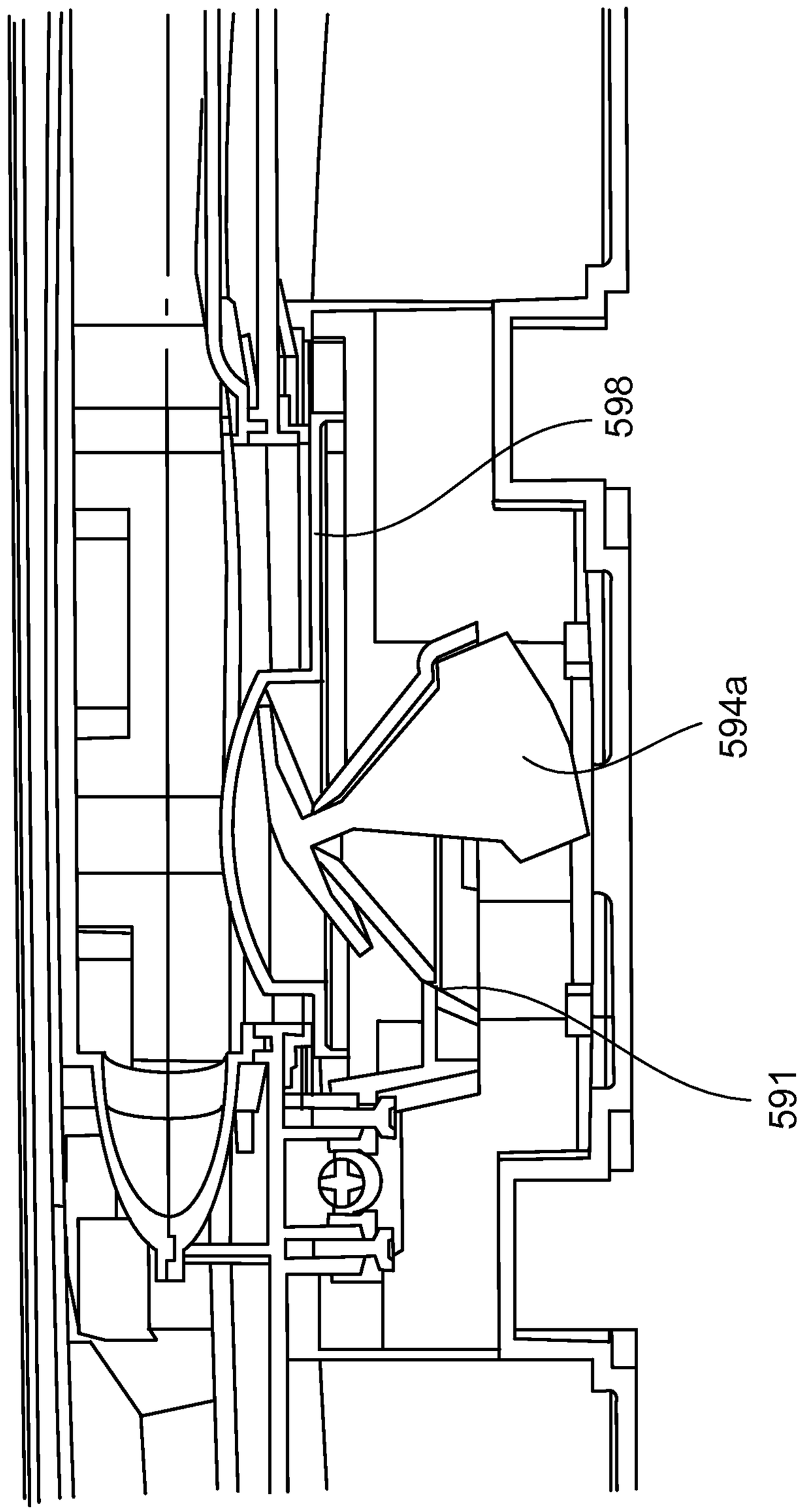

FIG. 31

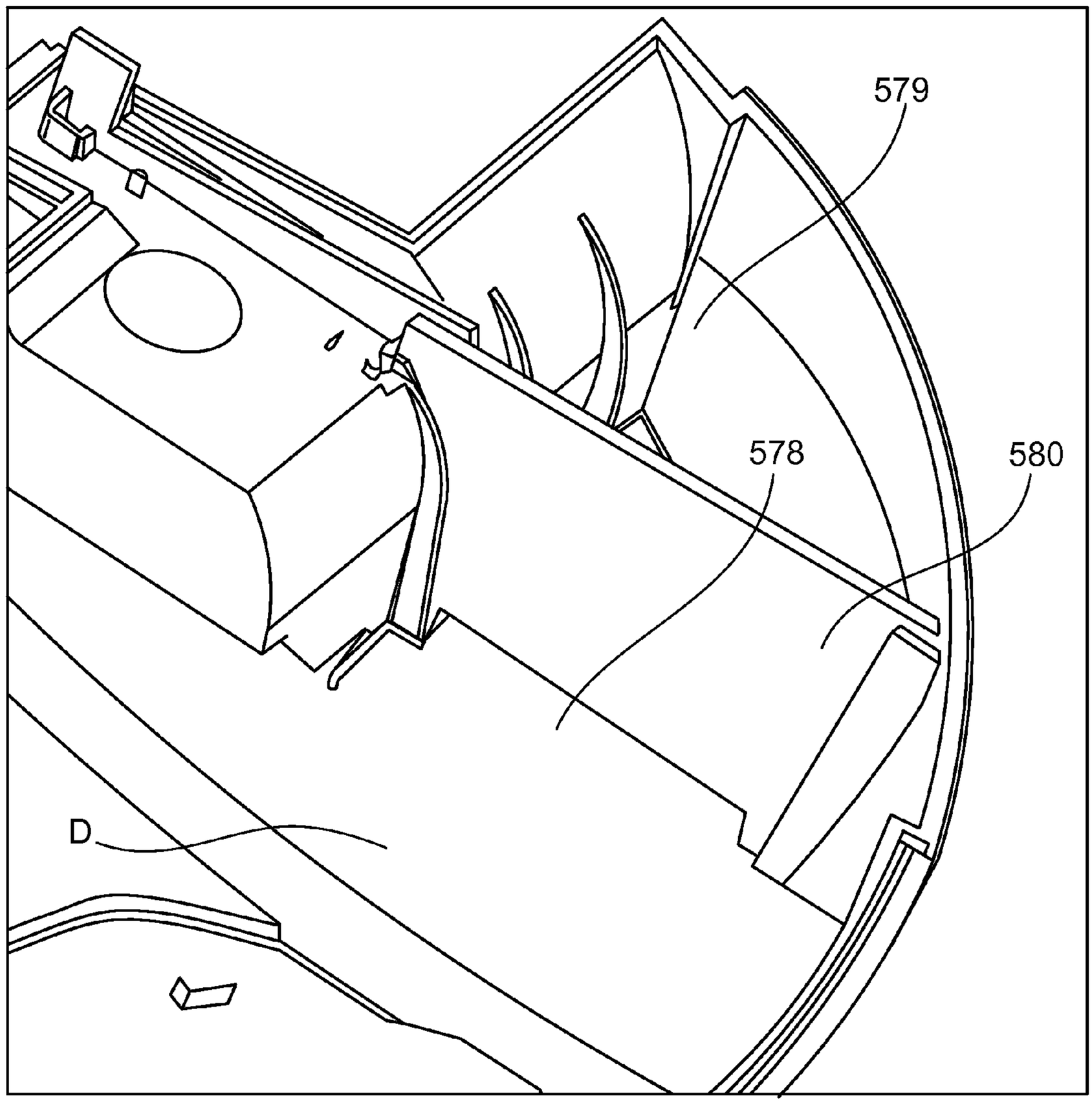

FIG. 32

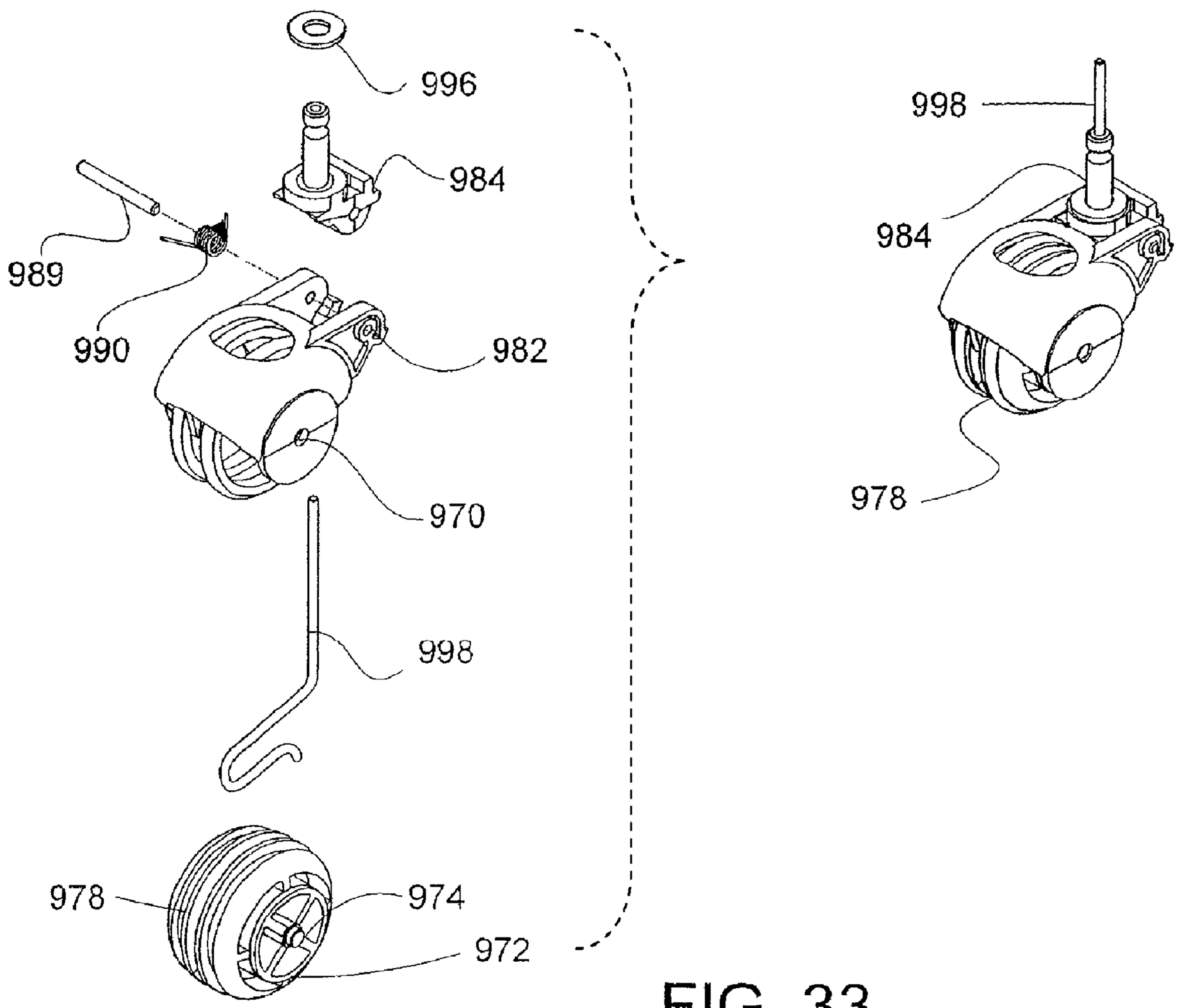

FIG. 33

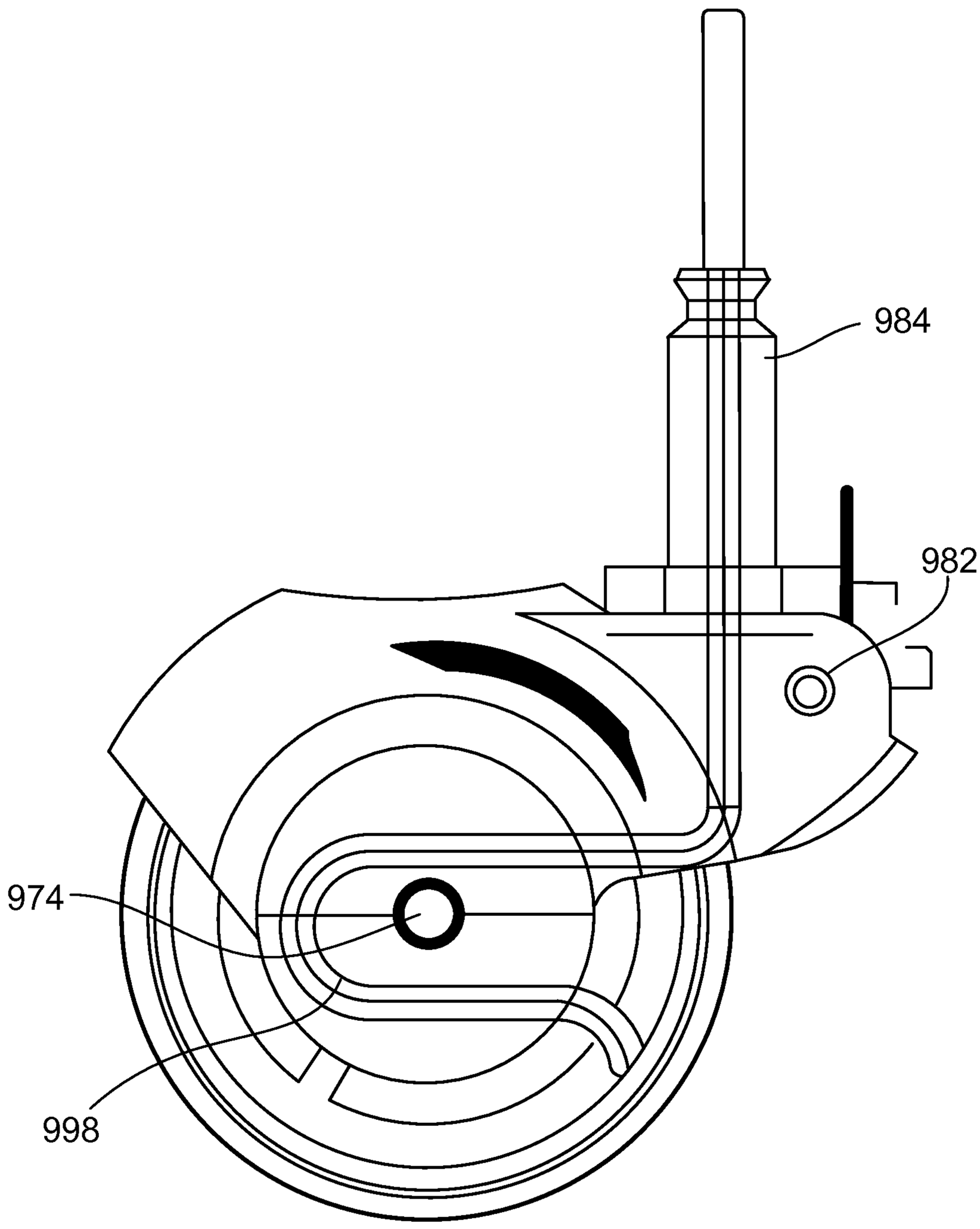

FIG. 34

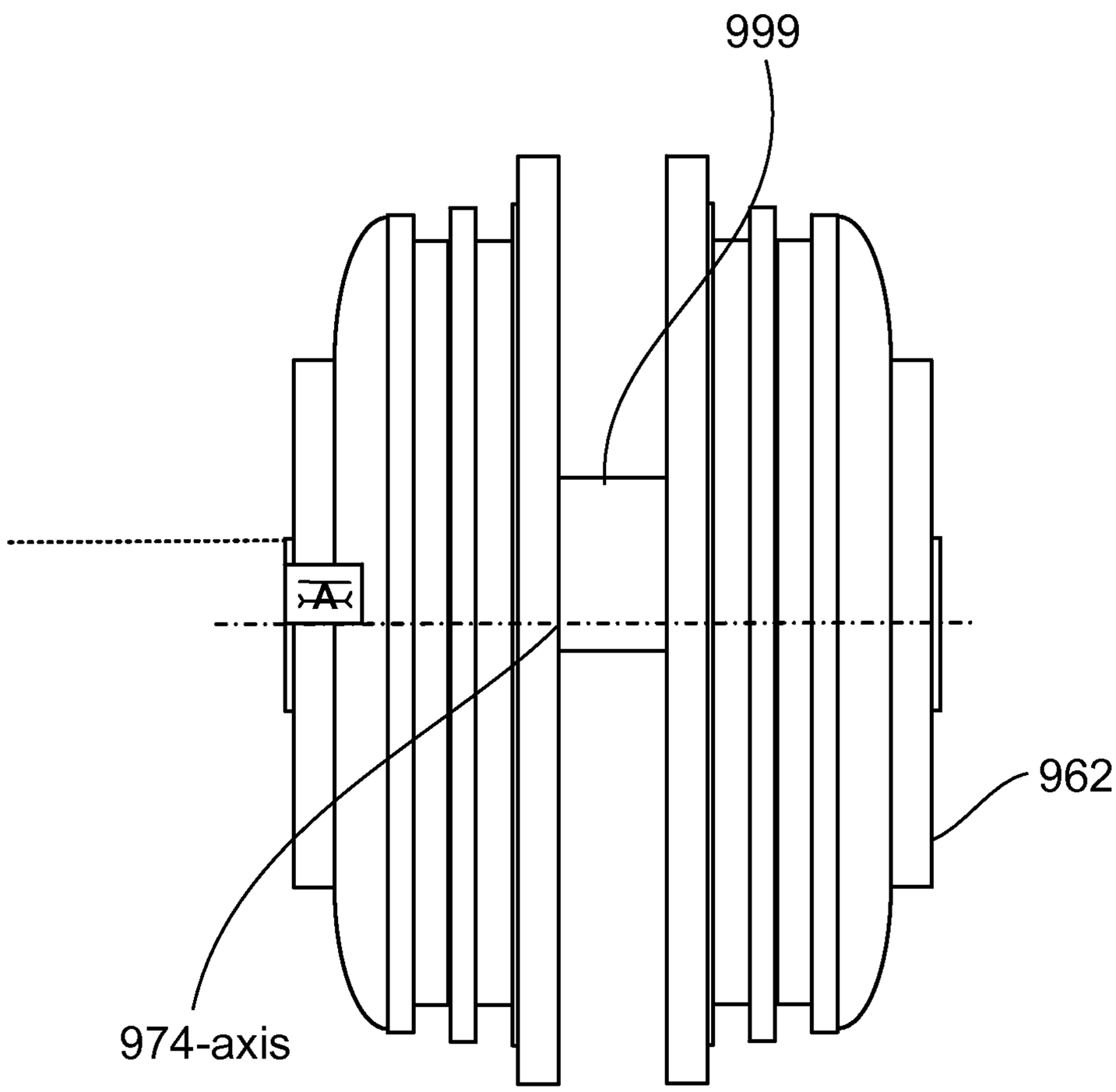

FIG. 35

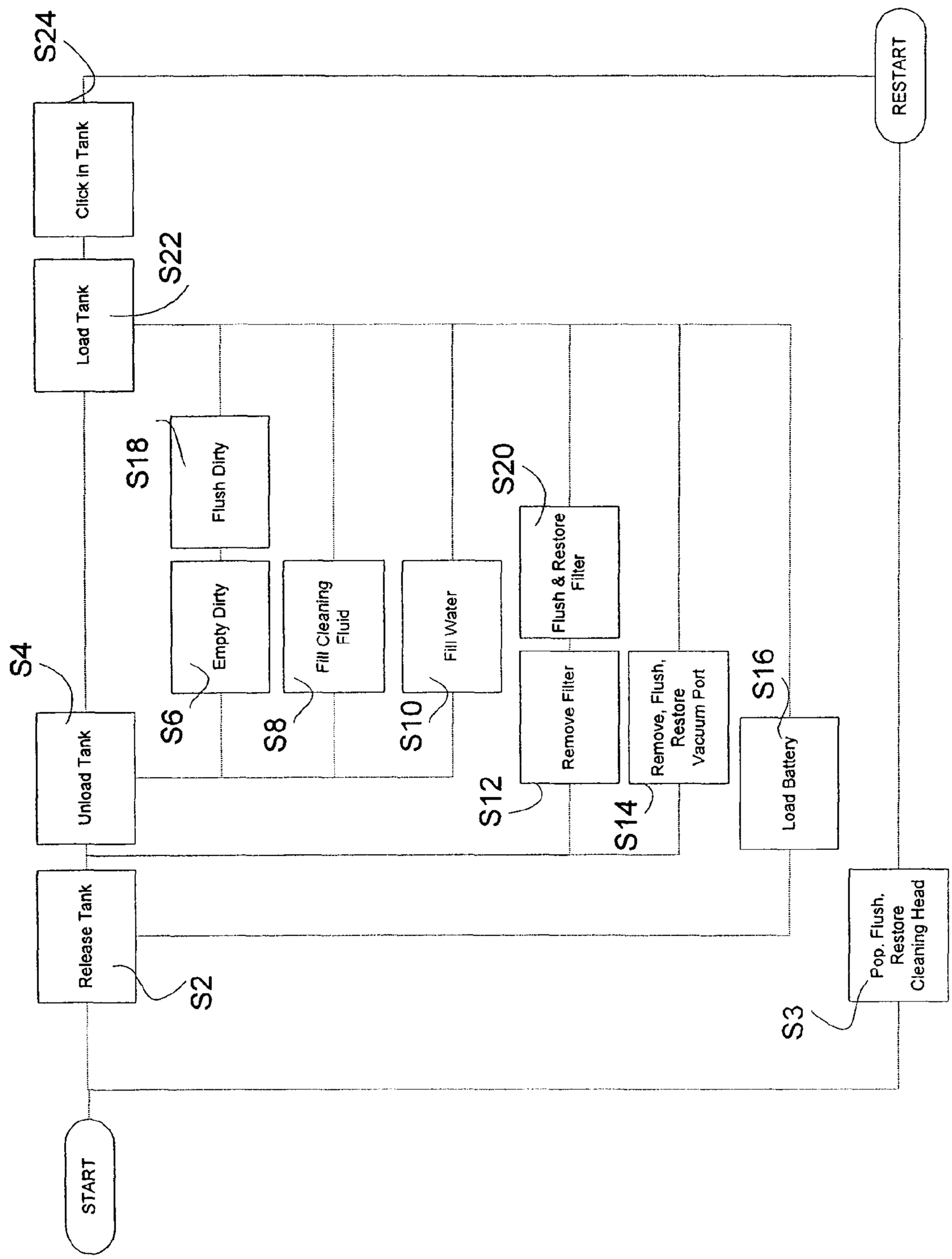
START
Release Tank
S2
Unload Tank
S4
Load Tank
S22
Click in Tank
S24
Empty Dirty
S6
Flush Dirty
S18
Fill Cleaning Fluid
S8
Fill Water
S10
Remove Filter
S12
Flush & Restore Filter
S20
Remove, Flush, Restore Vacuum Port
S14
Load Battery
S16
Pop, Flush, Restore Cleaning Head
S3
RESTART

FIG. 36

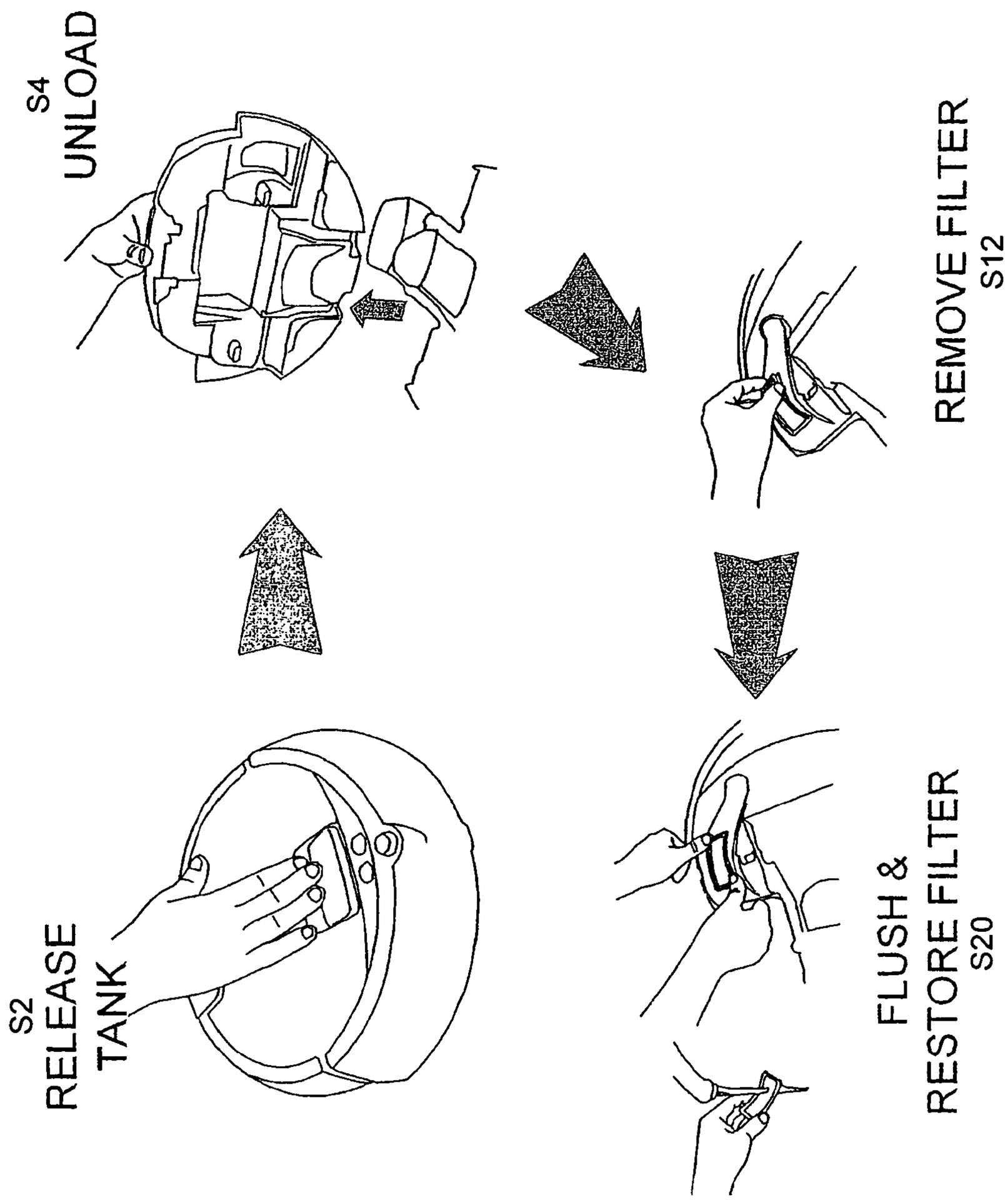
S2
RELEASE
TANK
S4
UNLOAD
REMOVE FILTER
S12
FLUSH &
RESTORE FILTER
S20

FIG. 37

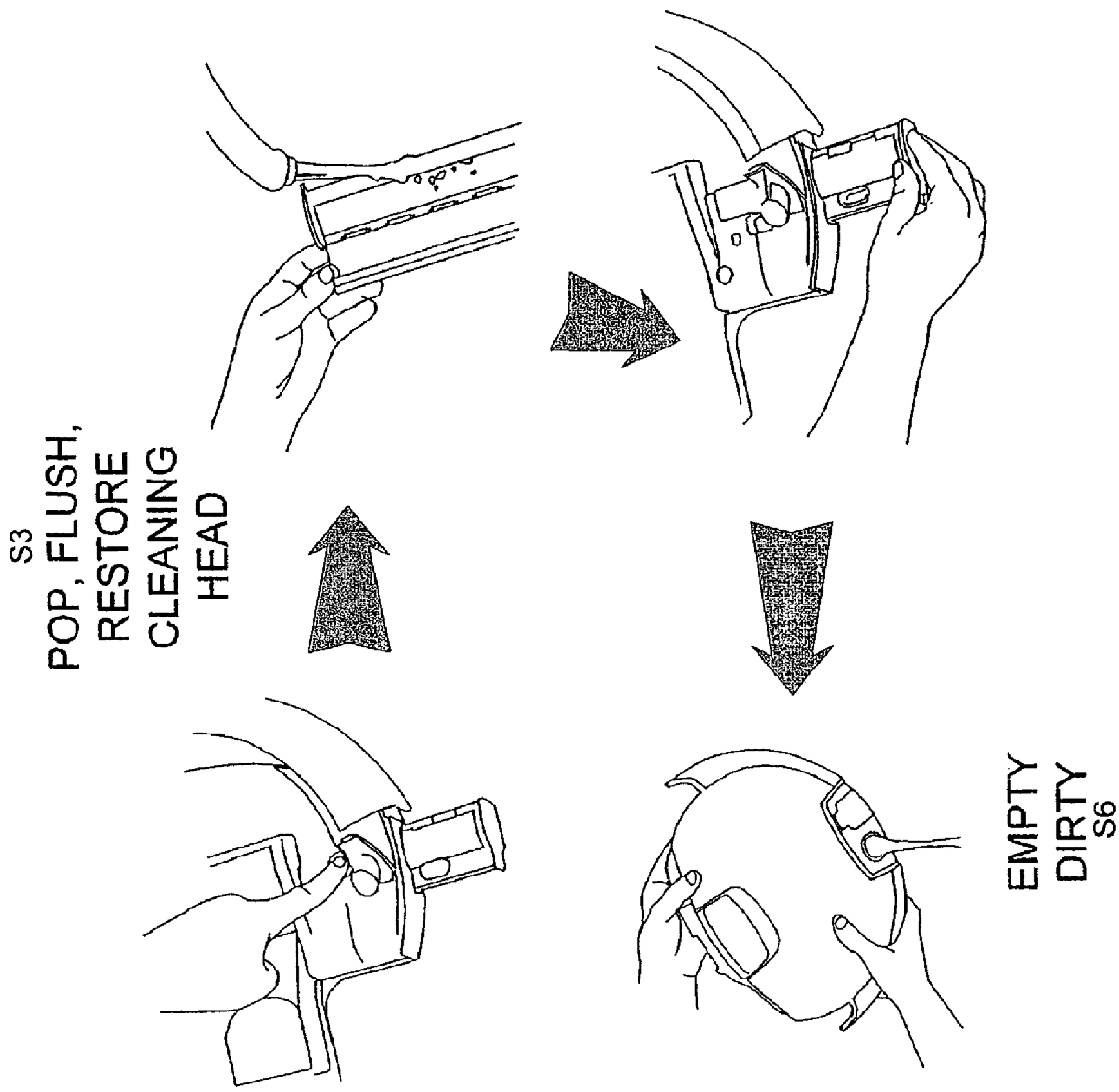

FIG. 38

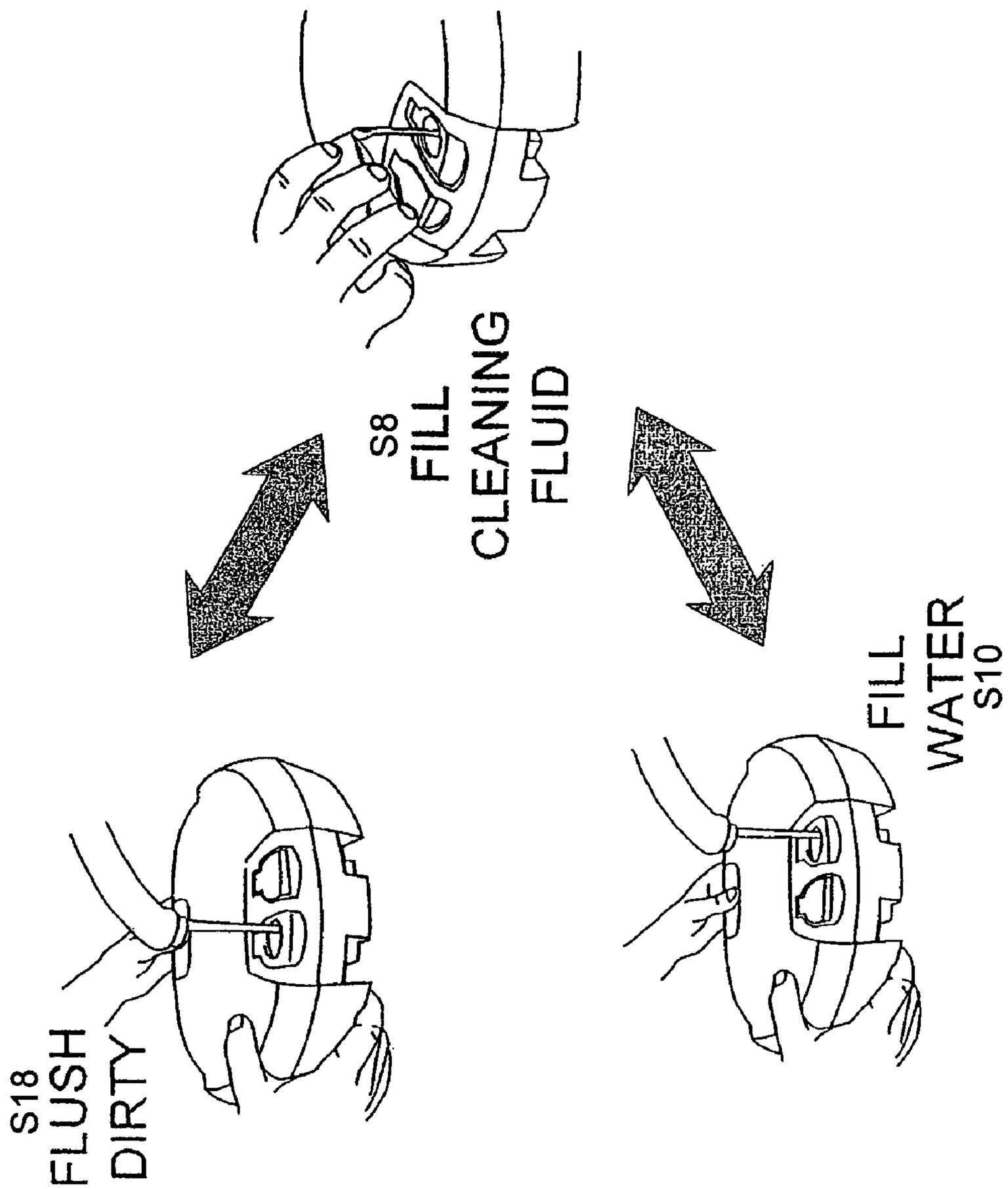

FIG. 39

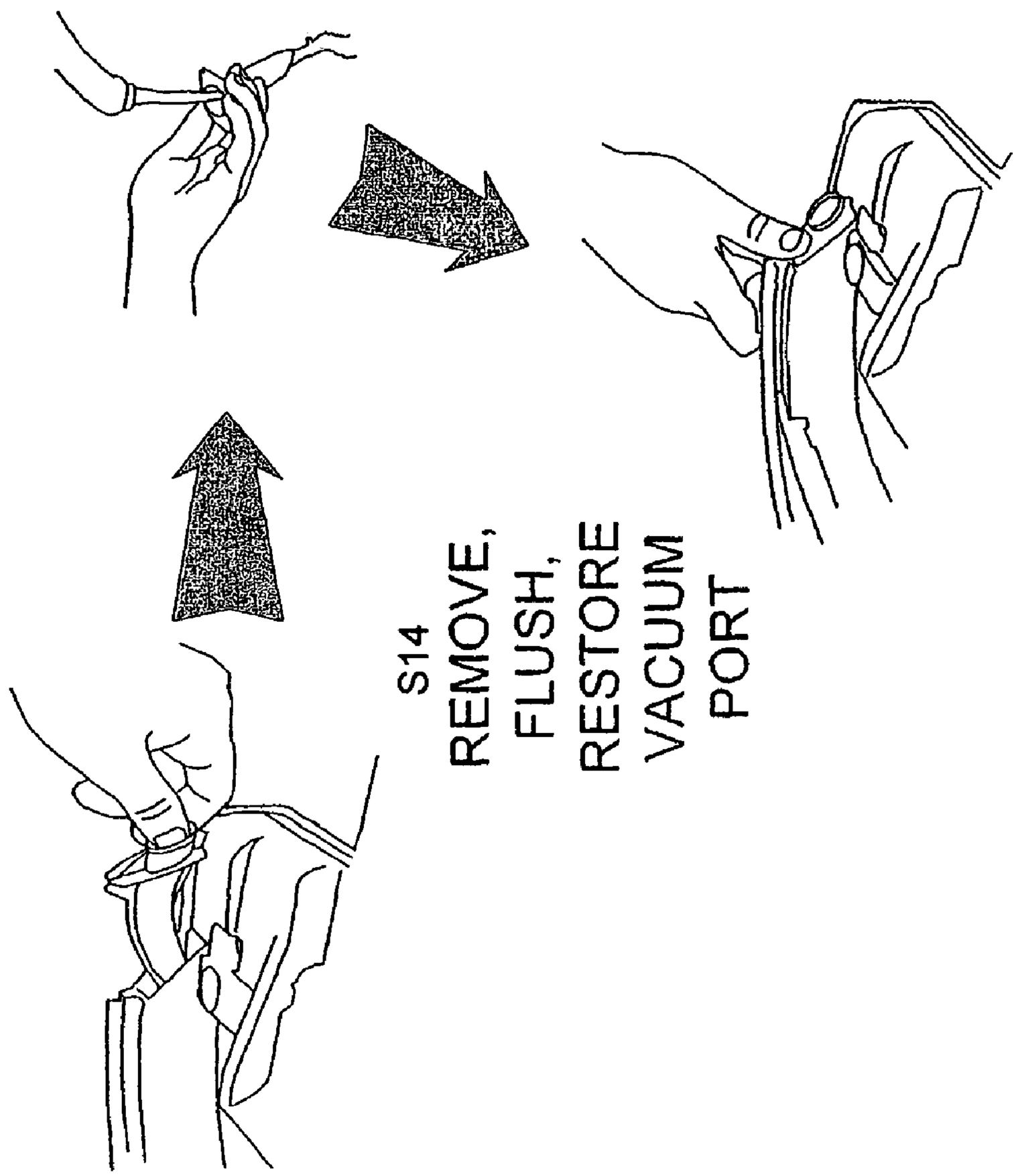

FIG. 40

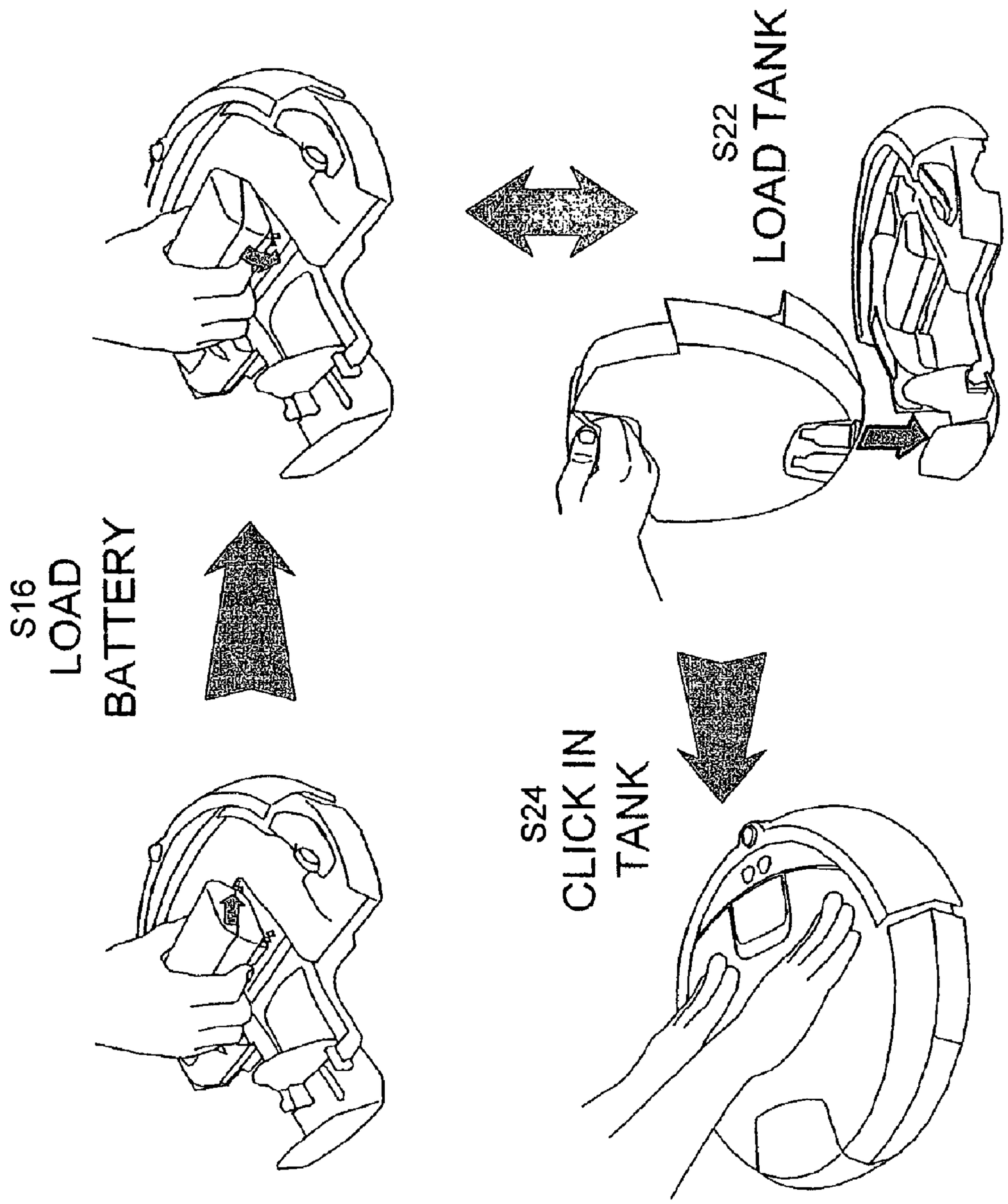

FIG. 41

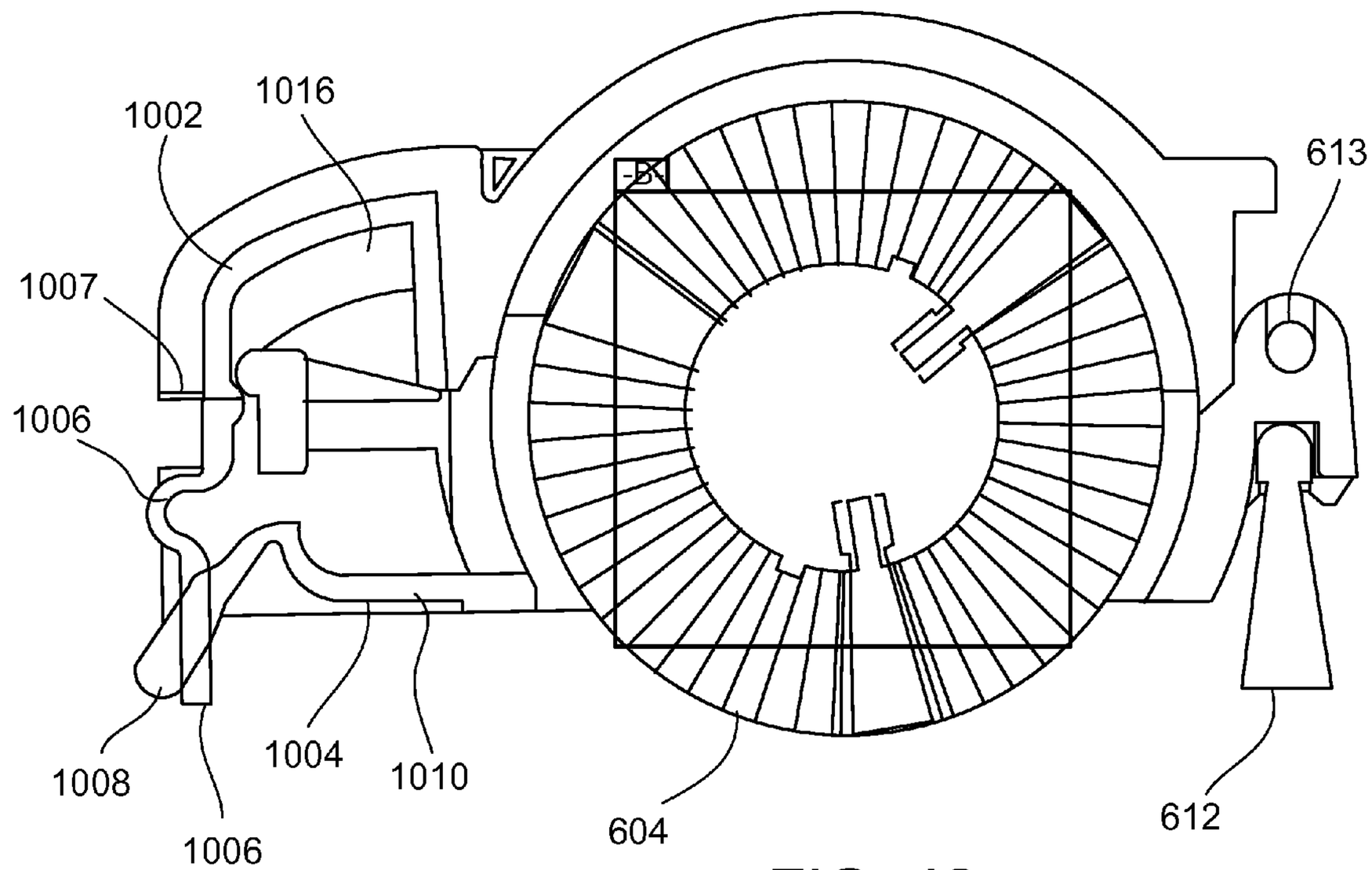

FIG. 42

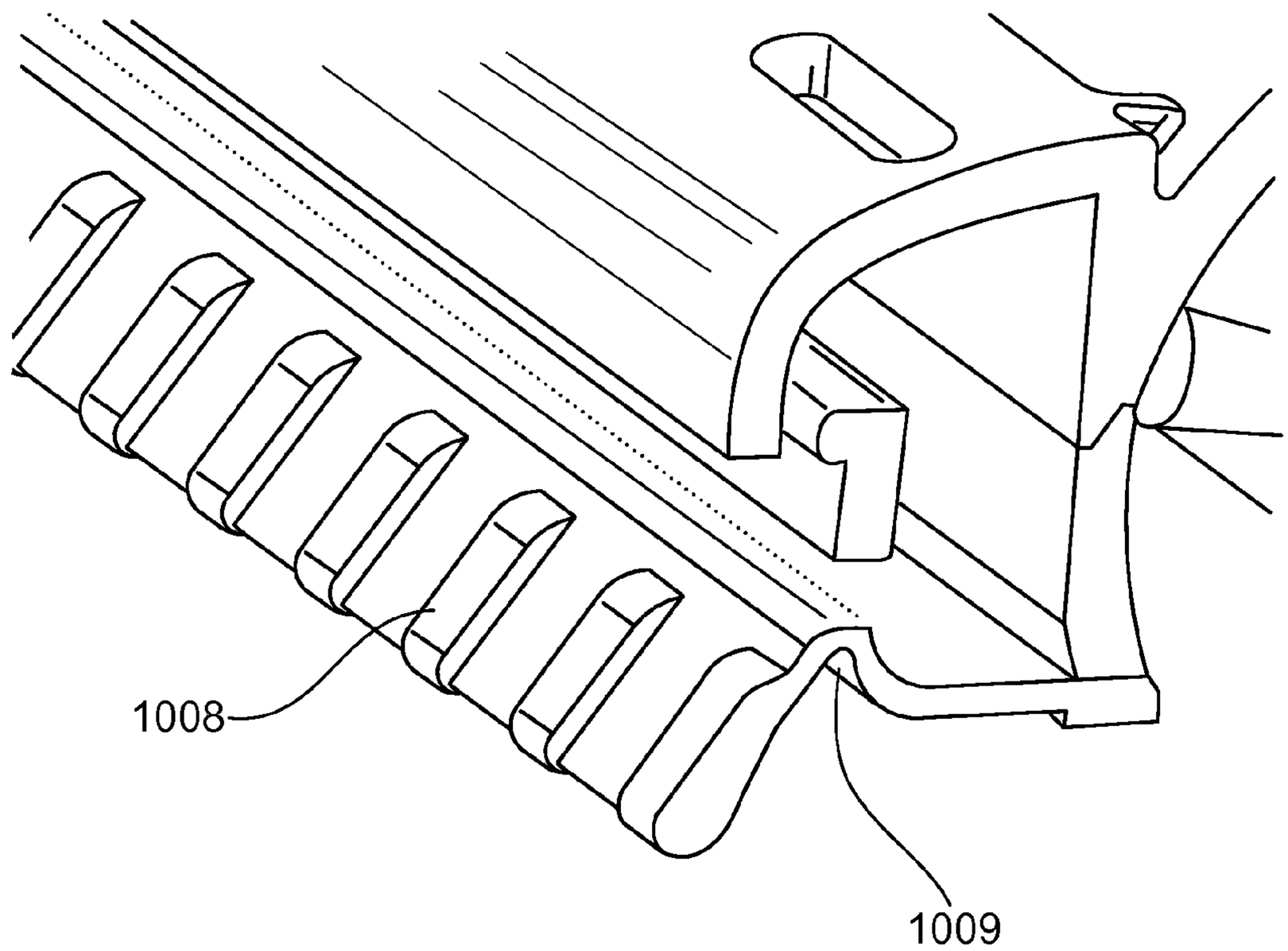

FIG. 43

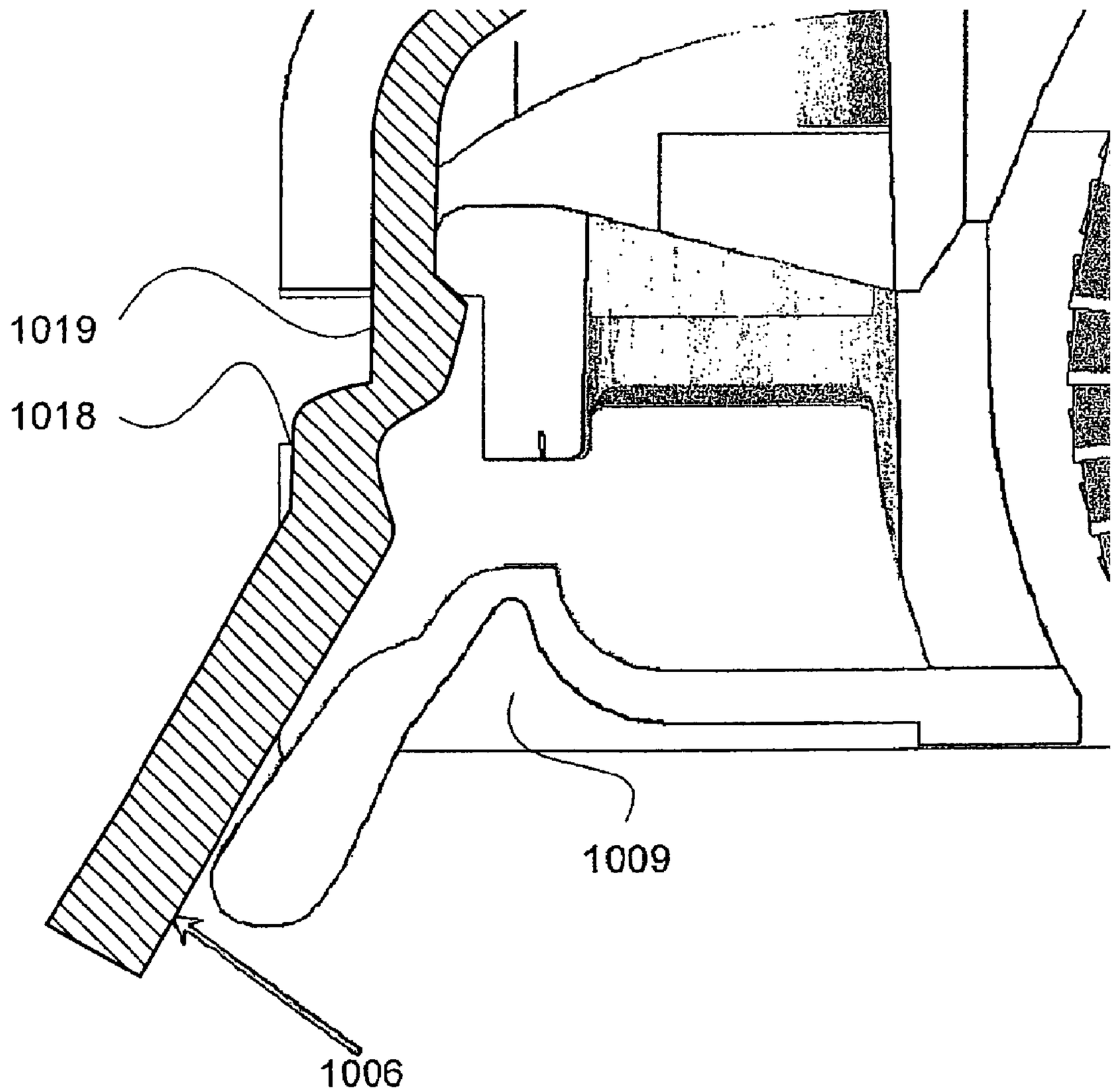

FIG. 44

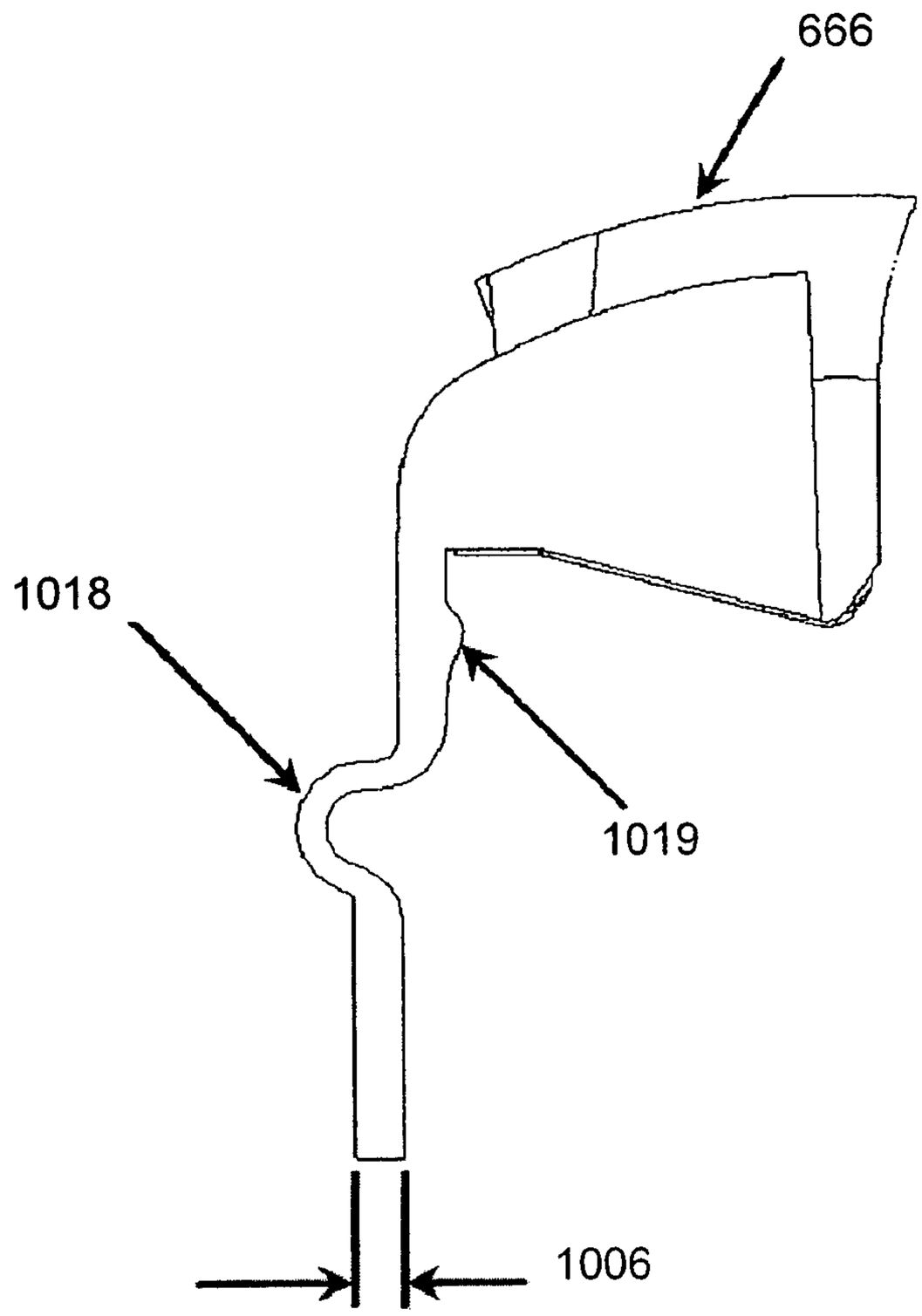

FIG. 45

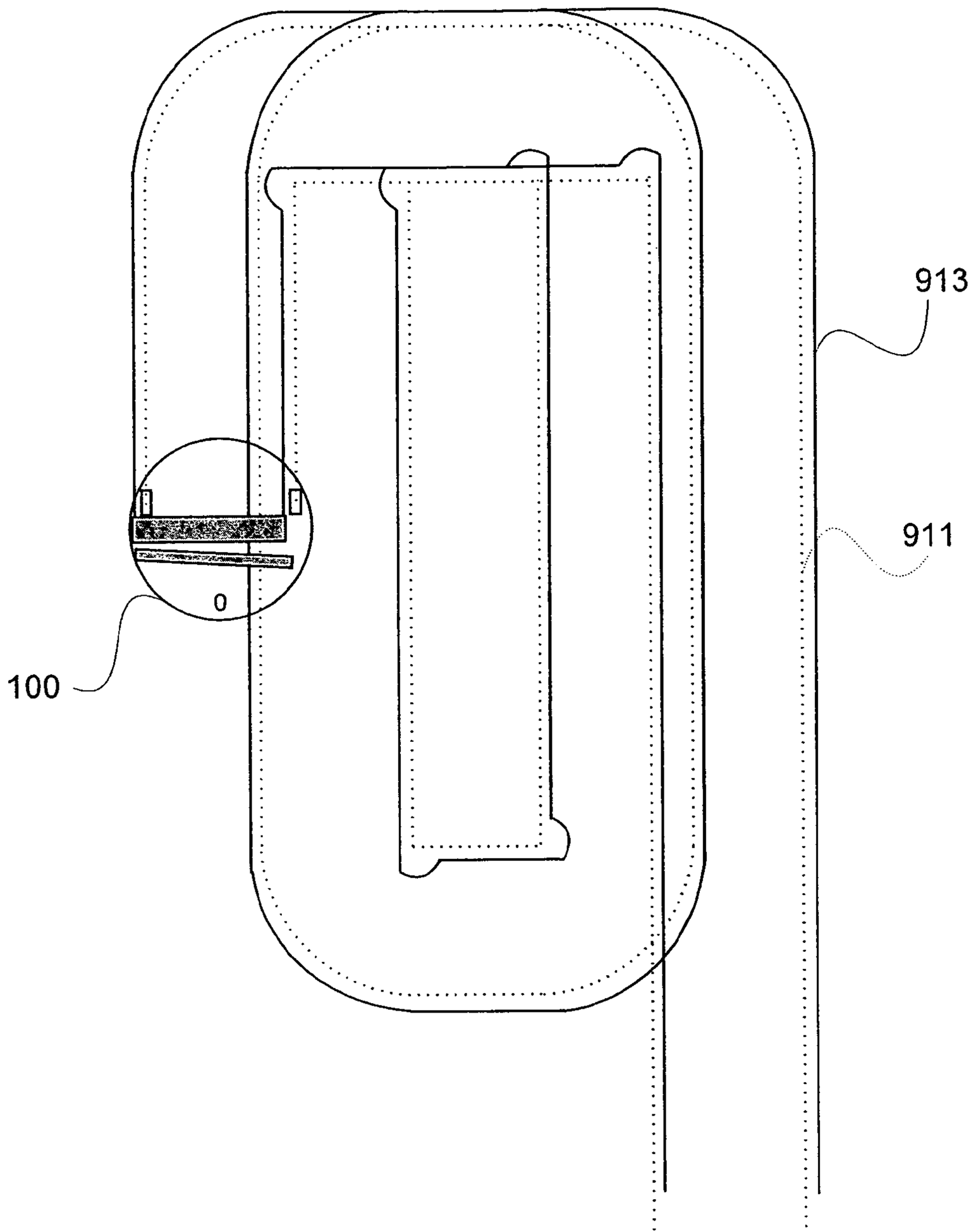

FIG. 46

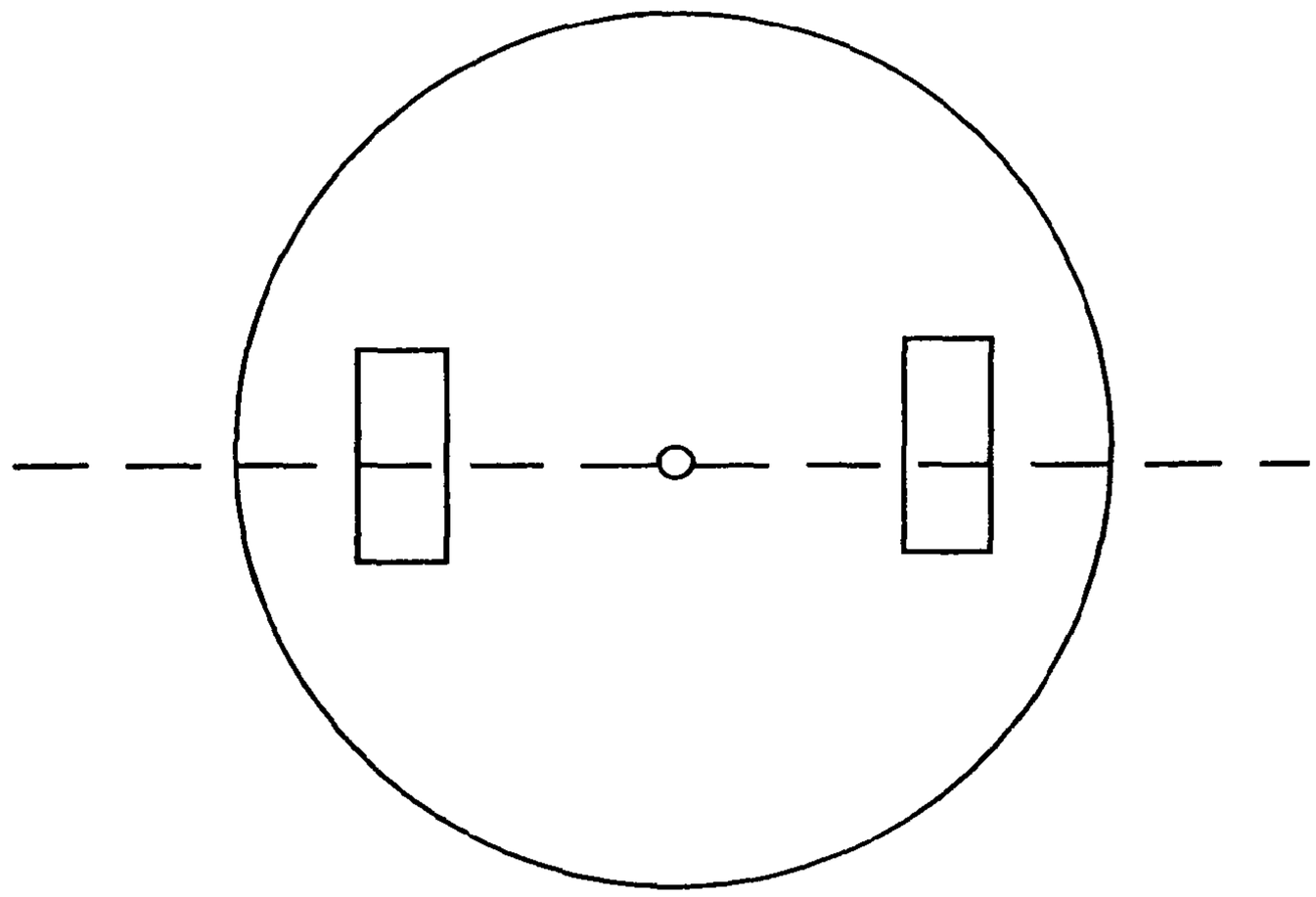

FIG. 47

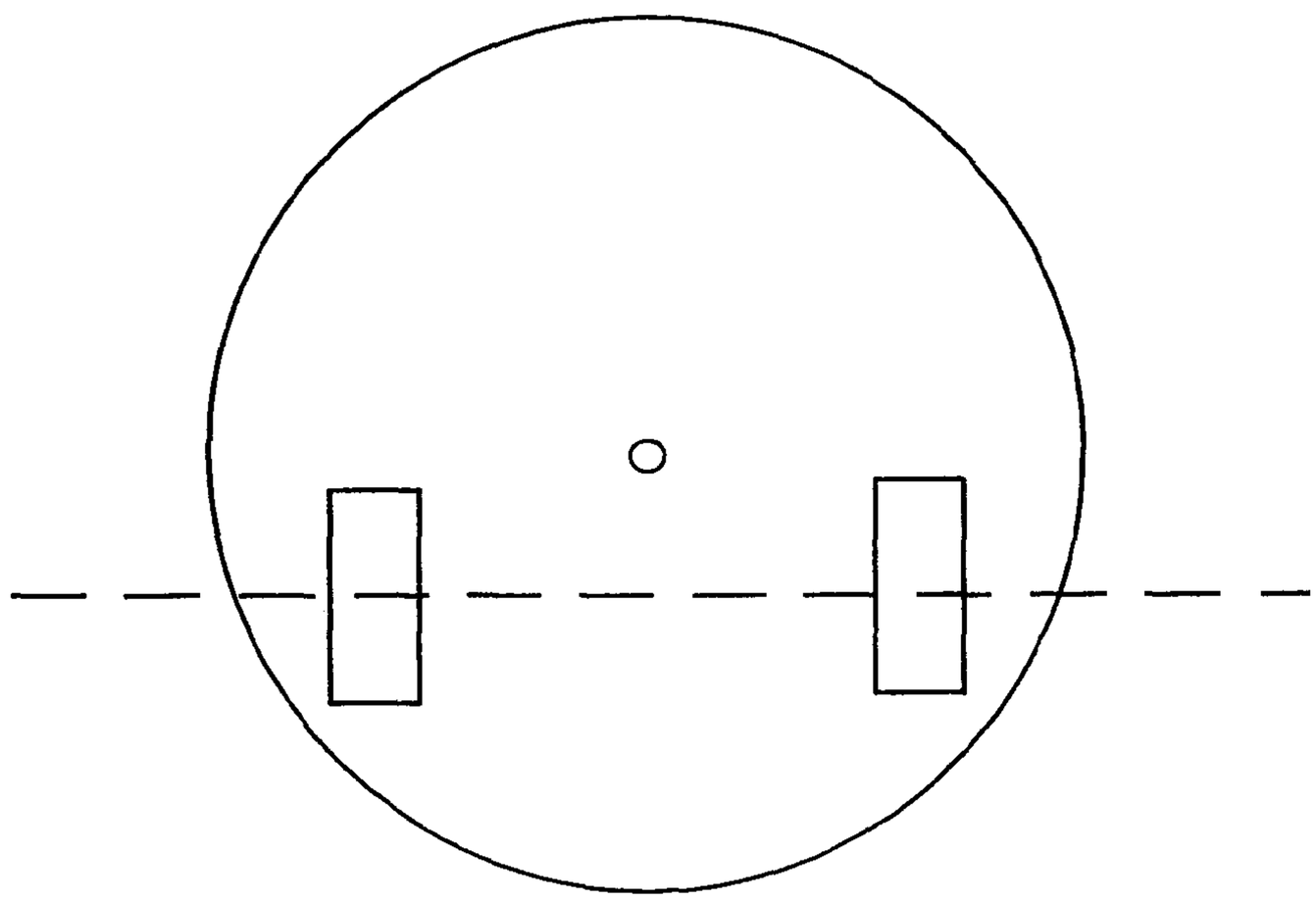

FIG. 48

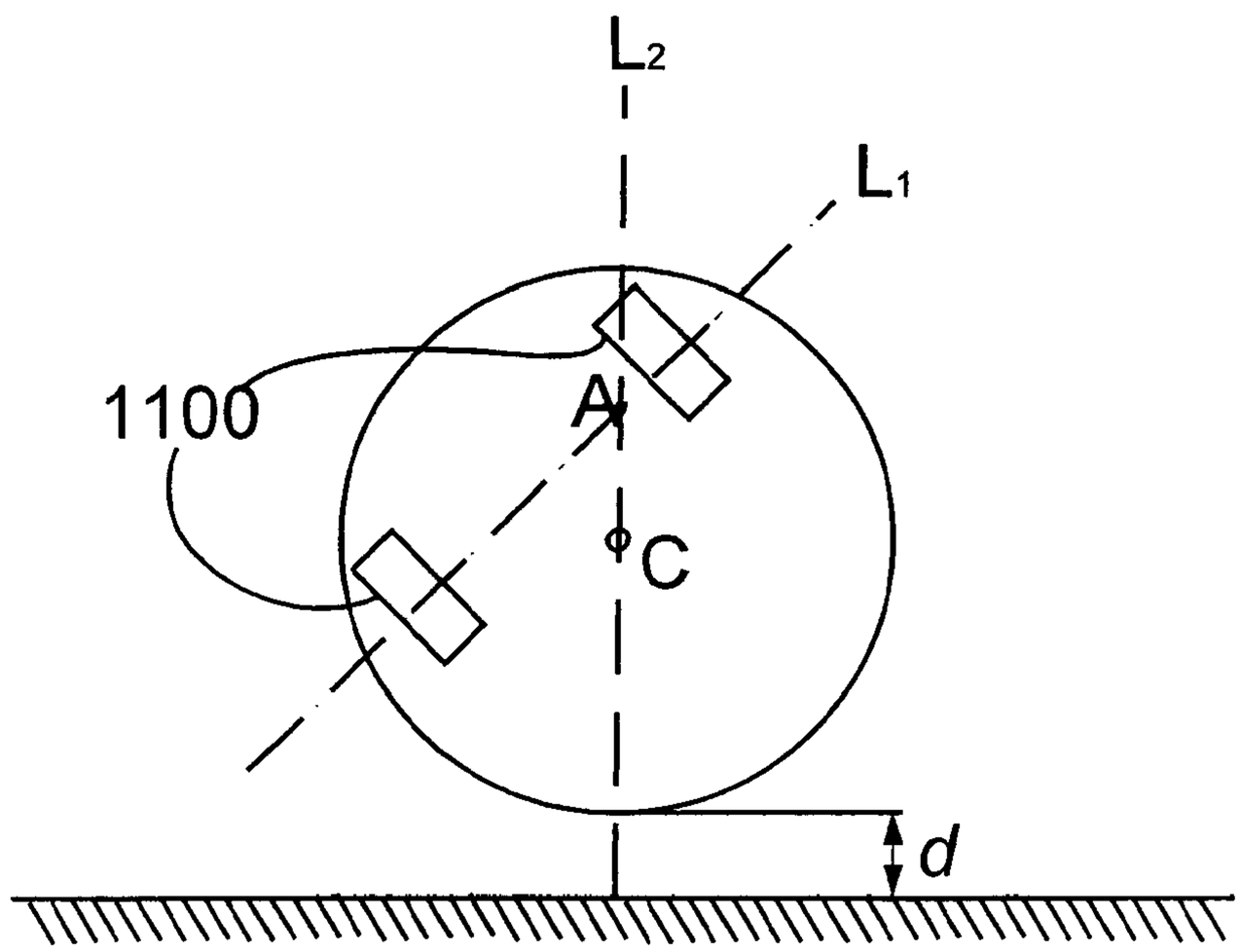

FIG. 49

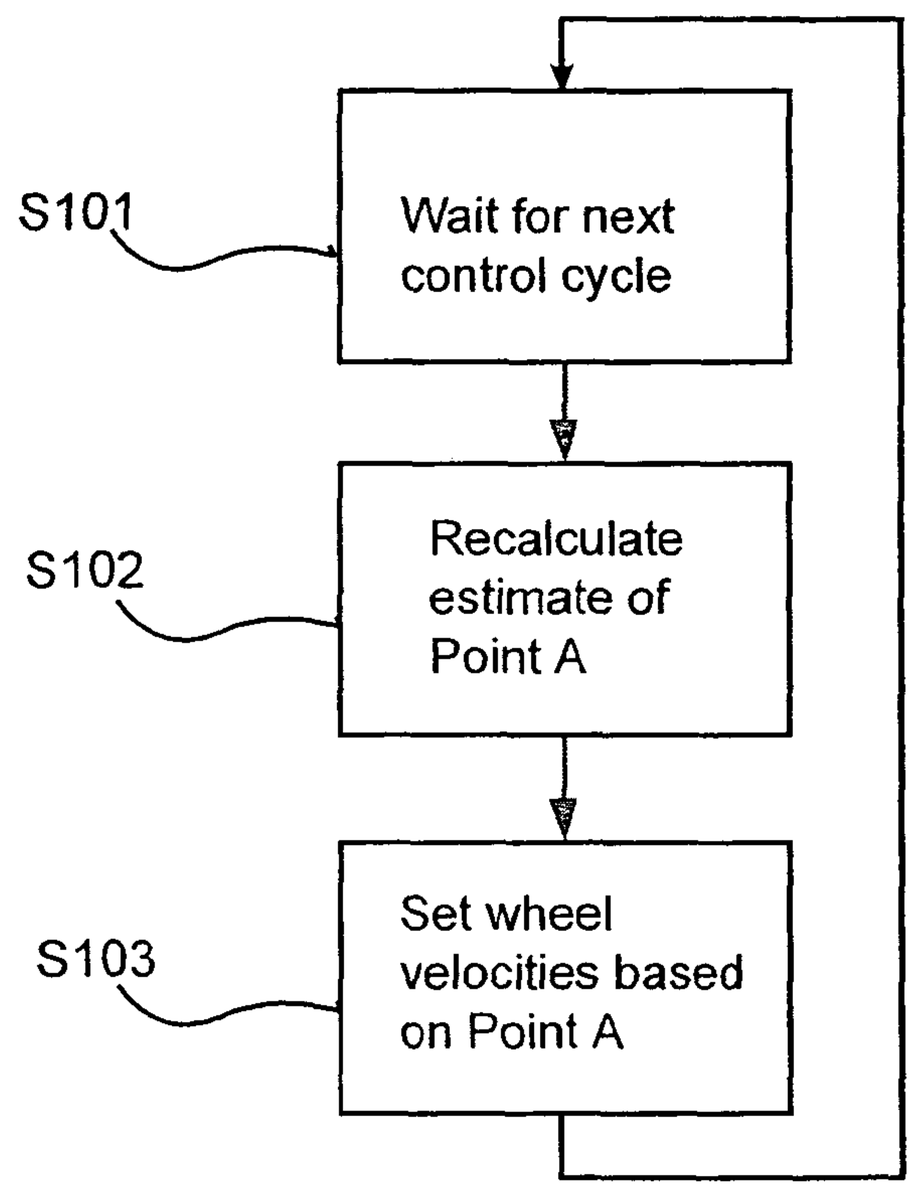
S101
Wait for next control cycle
S102
Recalculate estimate of Point A
S103
Set wheel velocities based on Point A

FIG. 50

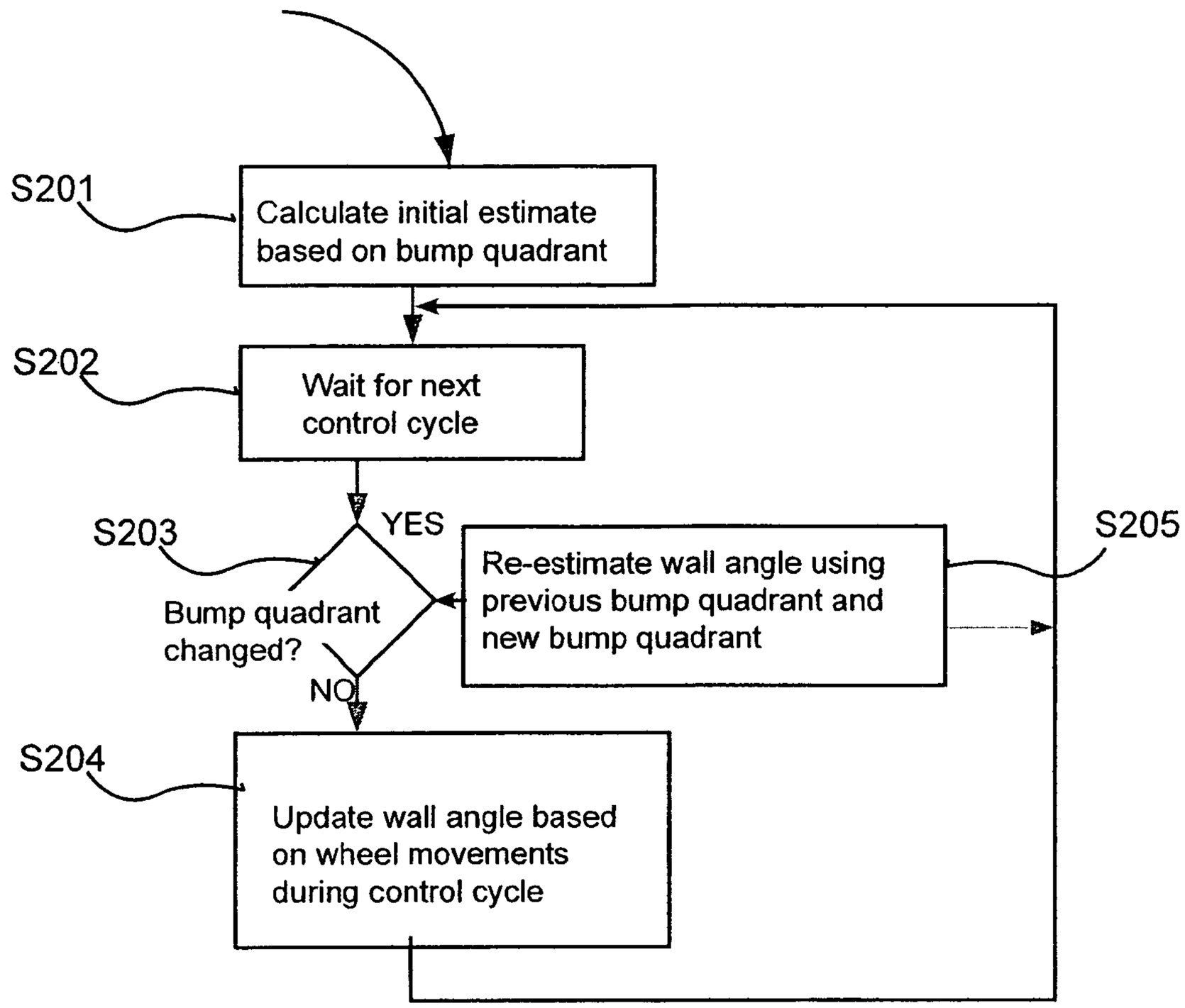
S201
Calculate initial estimate based on bump quadrant
S202
Wait for next control cycle
S203
Bump quadrant changed?
YES
NO
Re-estimate wall angle using previous bump quadrant and new bump quadrant
S205
S204
Update wall angle based on wheel movements during control cycle

FIG. 51

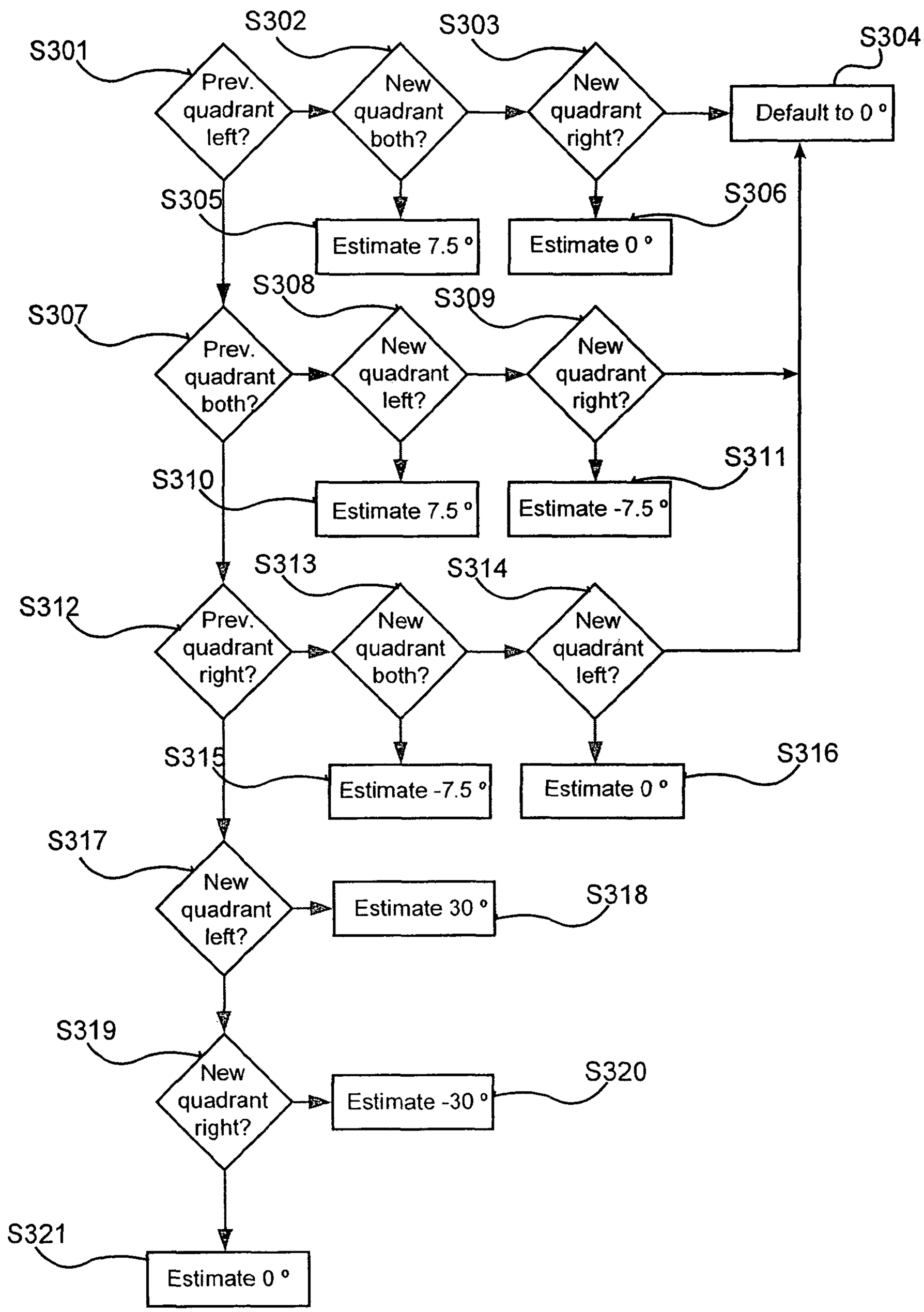
S301
Prev. quadrant left?
S302
New quadrant both?
S303
New quadrant right?
S304
Default to 0 °
S305
Estimate 7.5 °
S306
Estimate 0 °
S307
Prev. quadrant both?
S308
New quadrant left?
S309
New quadrant right?
S310
Estimate 7.5 °
S311
Estimate -7.5 °
S312
Prev. quadrant right?
S313
New quadrant both?
S314
New quadrant left?
S315
Estimate -7.5 °
S316
Estimate 0 °
S317
New quadrant left?
Estimate 30 °
S318
S319
New quadrant right?
Estimate -30 °
S320
S321
Estimate 0 °

FIG. 52

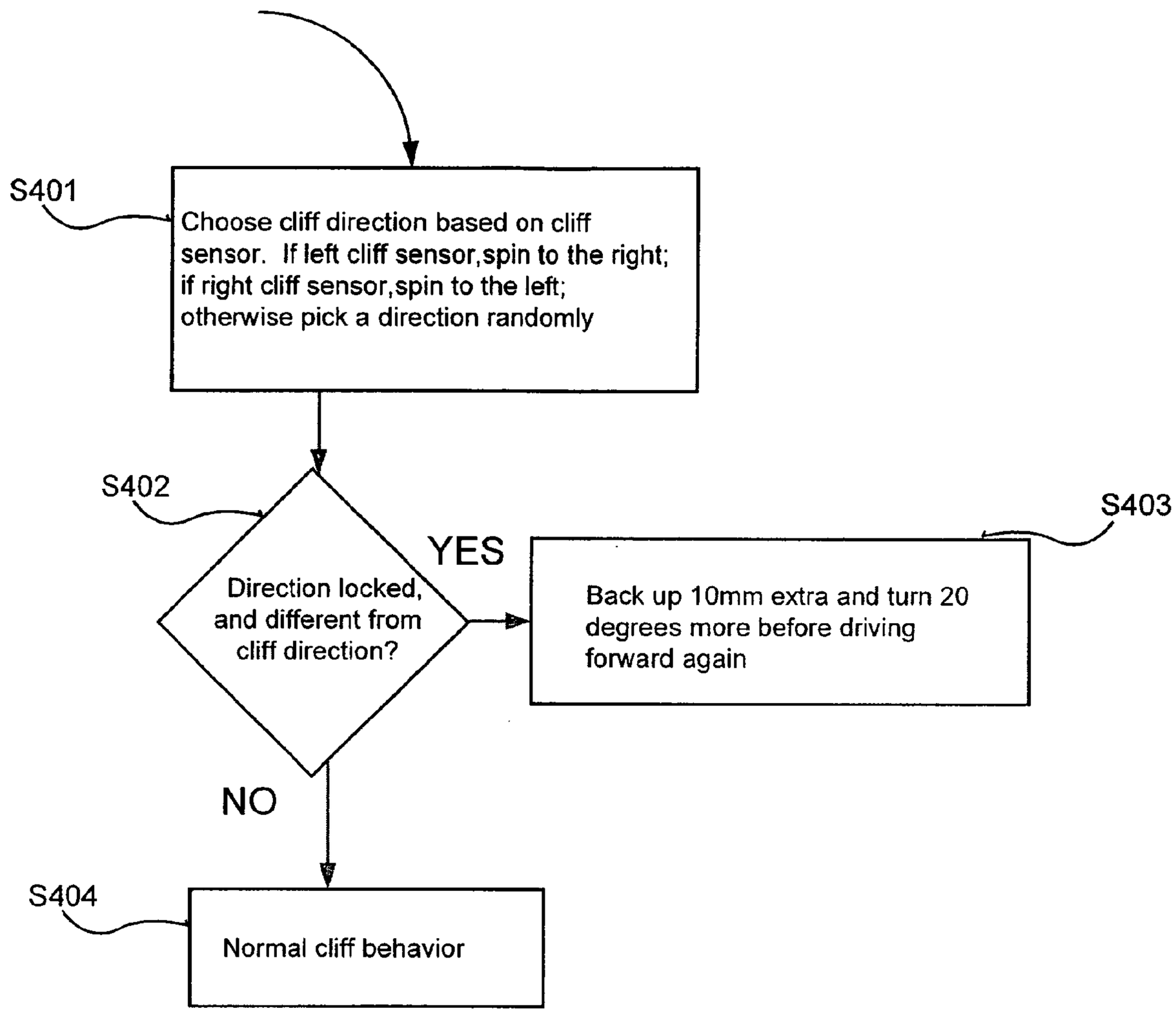
S401
Choose cliff direction based on cliff sensor. If left cliff sensor,spin to the right; if right cliff sensor,spin to the left; otherwise pick a direction randomly
S402
Direction locked, and different from cliff direction?
YES
S403
Back up 10mm extra and turn 20 degrees more before driving forward again
NO
S404
Normal cliff behavior

FIG. 53

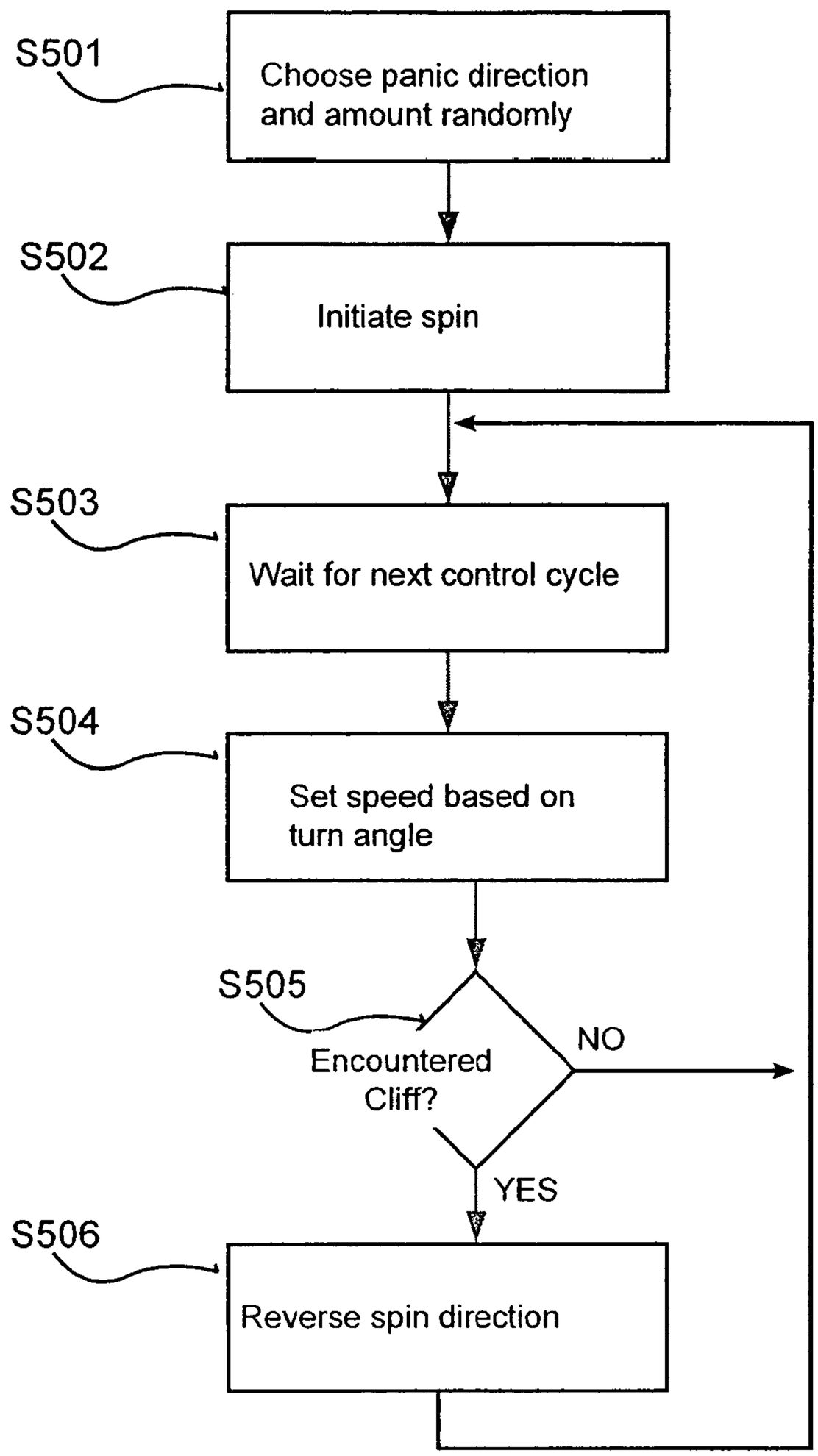
S501
Choose panic direction and amount randomly
S502
Initiate spin
S503
Wait for next control cycle
S504
Set speed based on turn angle
S505
Encountered Cliff?
NO
YES
S506
Reverse spin direction

FIG. 54

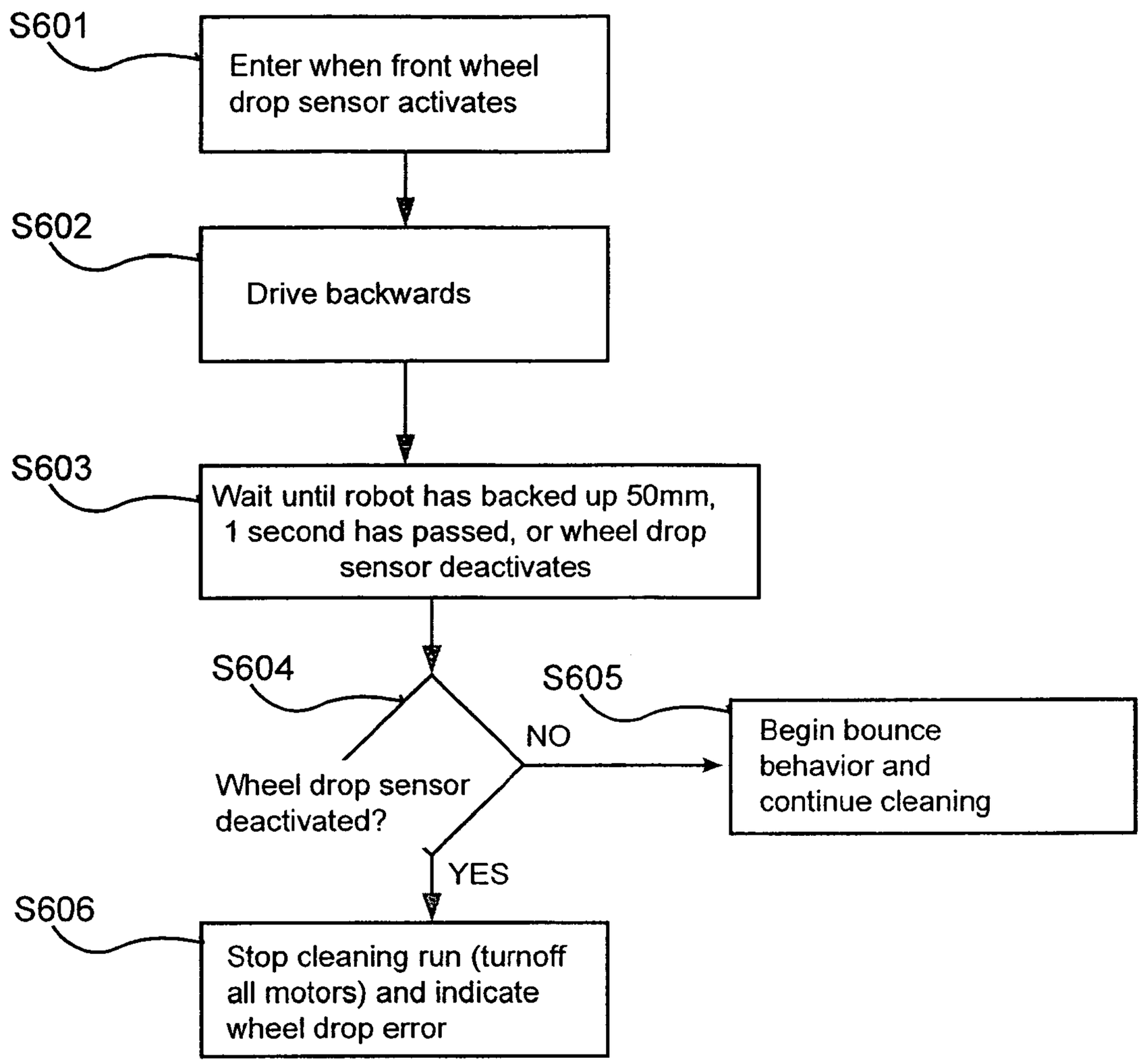
S601
Enter when front wheel drop sensor activates
S602
Drive backwards
S603
Wait until robot has backed up 50mm, 1 second has passed, or wheel drop sensor deactivates
S604
Wheel drop sensor deactivated?
NO
S605
Begin bounce behavior and continue cleaning
YES
S606
Stop cleaning run (turnoff all motors) and indicate wheel drop error

FIG. 55

FIG. 56

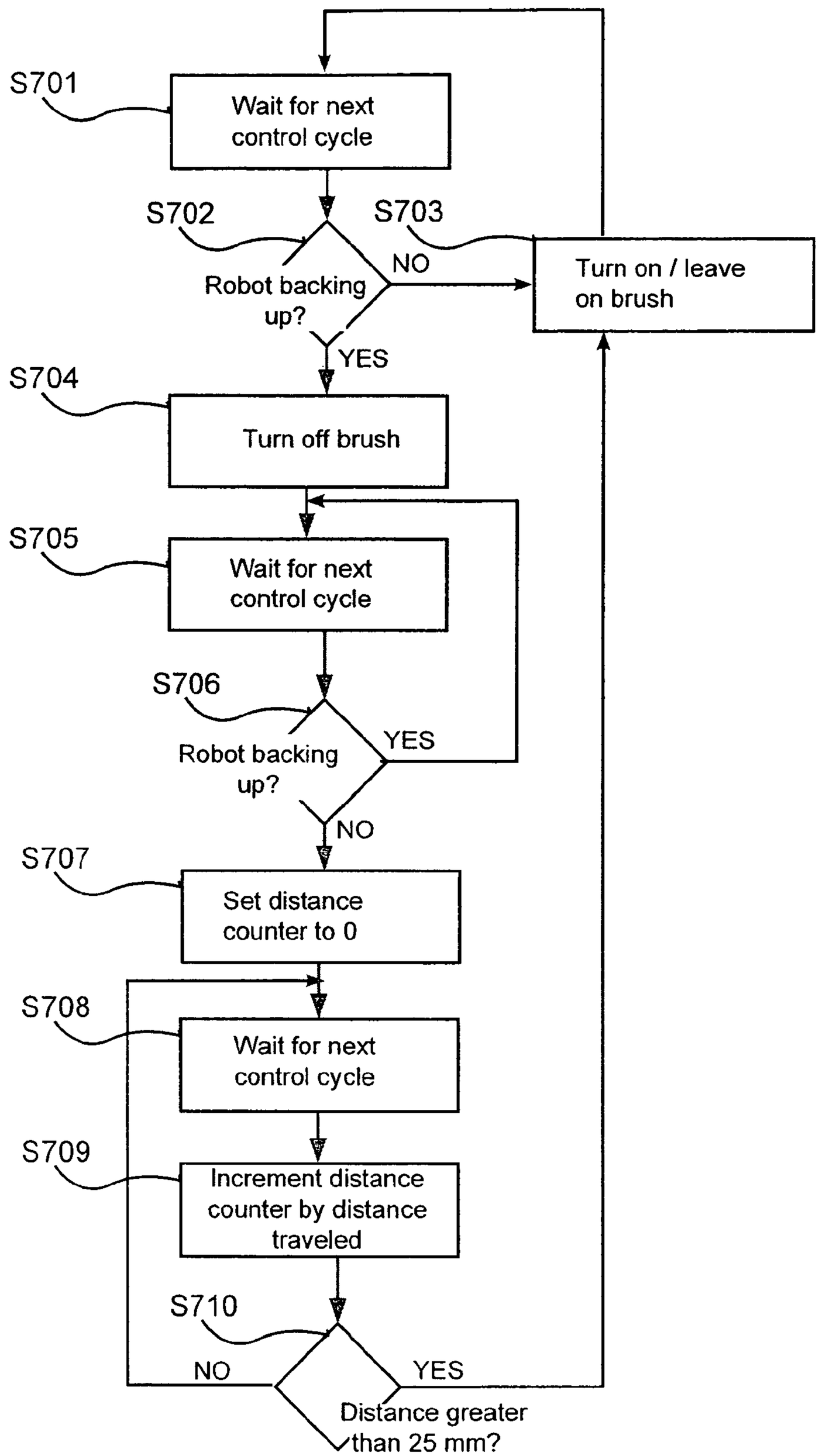
S701
Wait for next control cycle
S702
Robot backing up?
NO
YES
S703
Turn on / leave on brush
S704
Turn off brush
S705
Wait for next control cycle
S706
Robot backing up?
YES
NO
S707
Set distance counter to 0
S708
Wait for next control cycle
S709
Increment distance counter by distance traveled
S710
Distance greater than 25 mm?
NO
YES

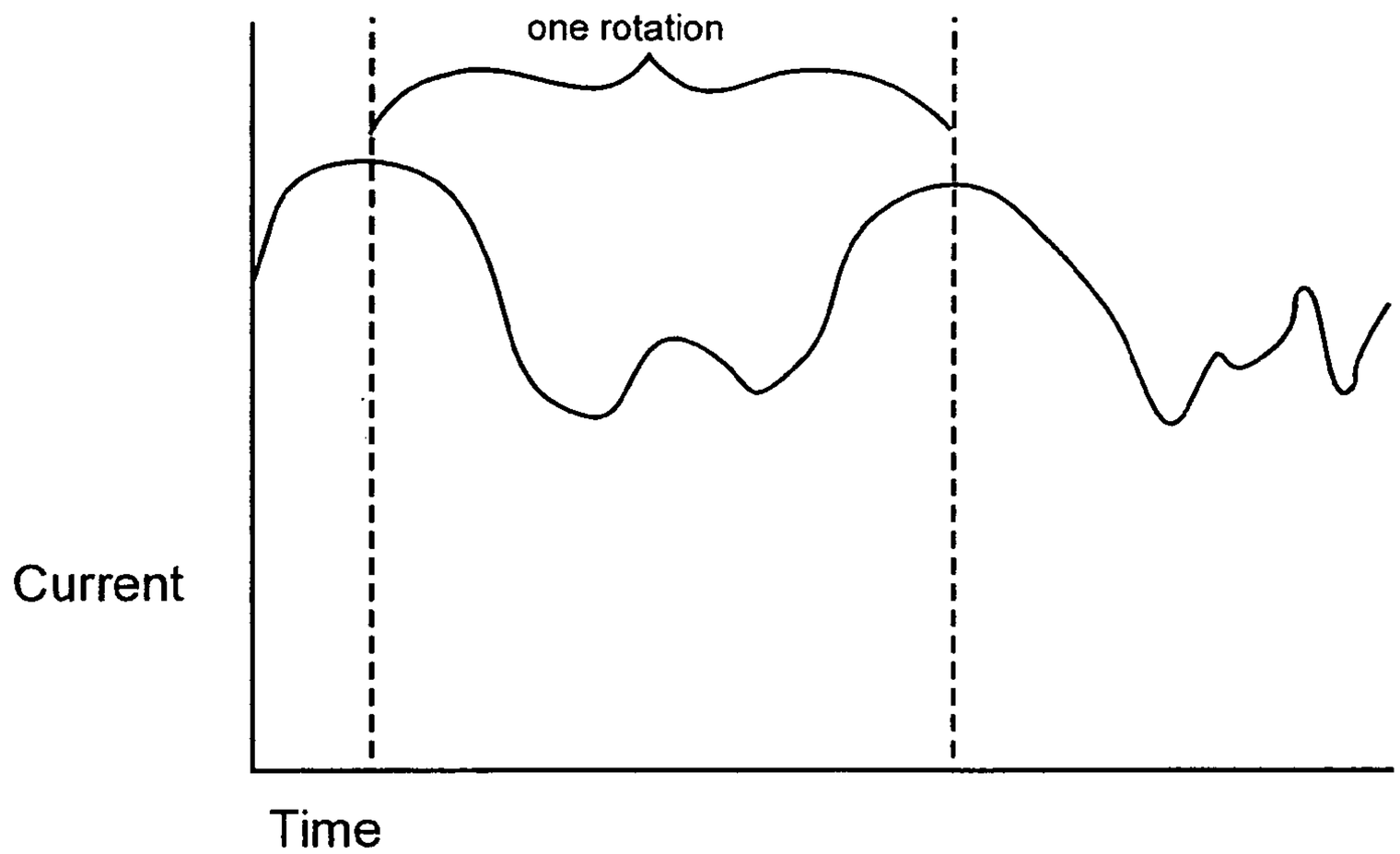

FIG. 57

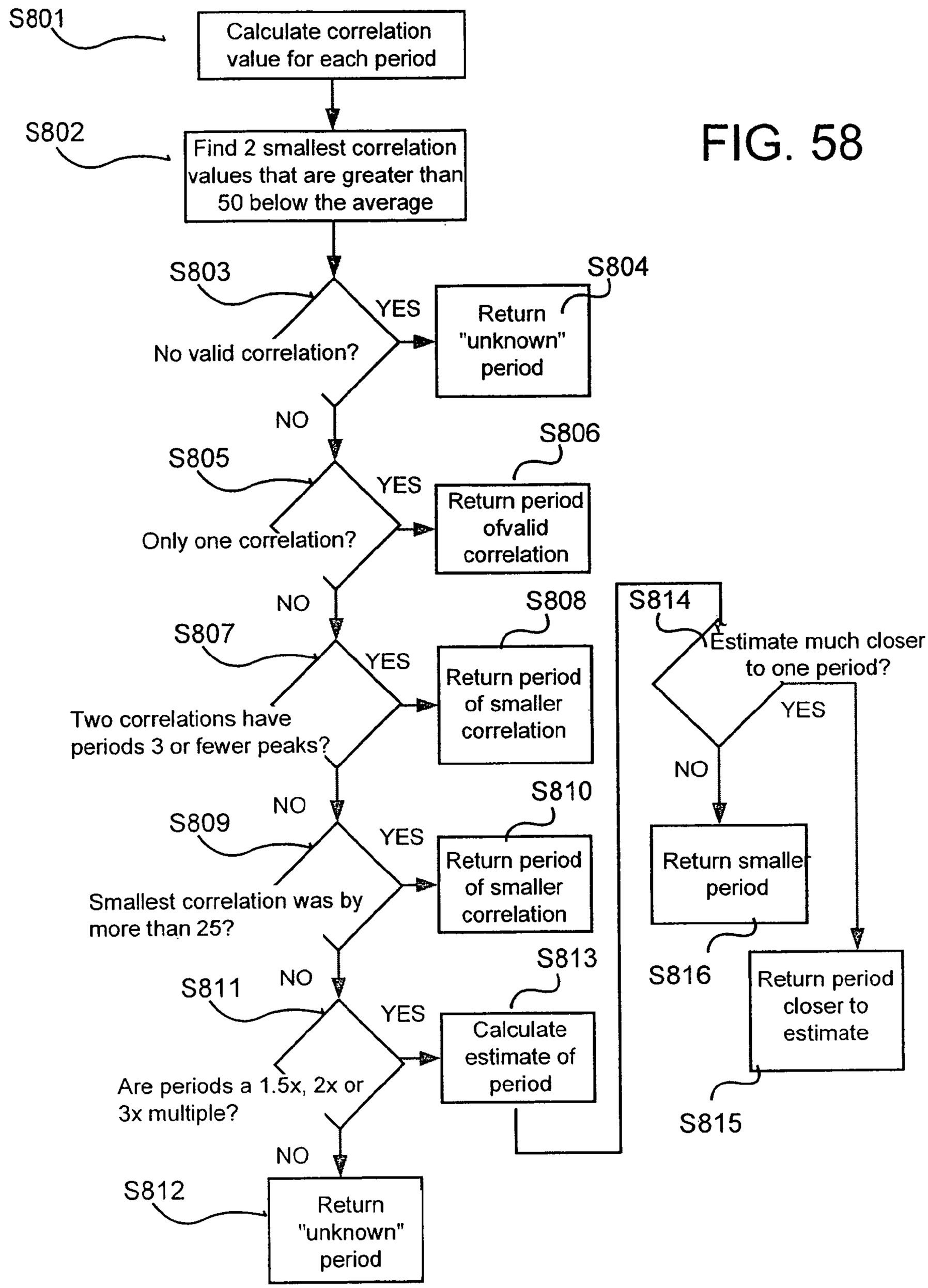
S801
Calculate correlation value for each period
S802
Find 2 smallest correlation values that are greater than 50 below the average
S803
No valid correlation?
YES
S804
Return "unknown" period
NO
S805
Only one correlation?
YES
S806
Return period ofvalid correlation
NO
S807
Two correlations have periods 3 or fewer peaks?
YES
S808
Return period of smaller correlation
NO
S809
Smallest correlation was by more than 25?
YES
S810
Return period of smaller correlation
NO
S811
Are periods a 1.5x, 2x or 3x multiple?
YES
S813
Calculate estimate of period
NO
S812
Return "unknown" period
S814
Estimate much closer to one period?
YES
NO
Return smaller period
S816
Return period closer to estimate
S815

FIG. 58

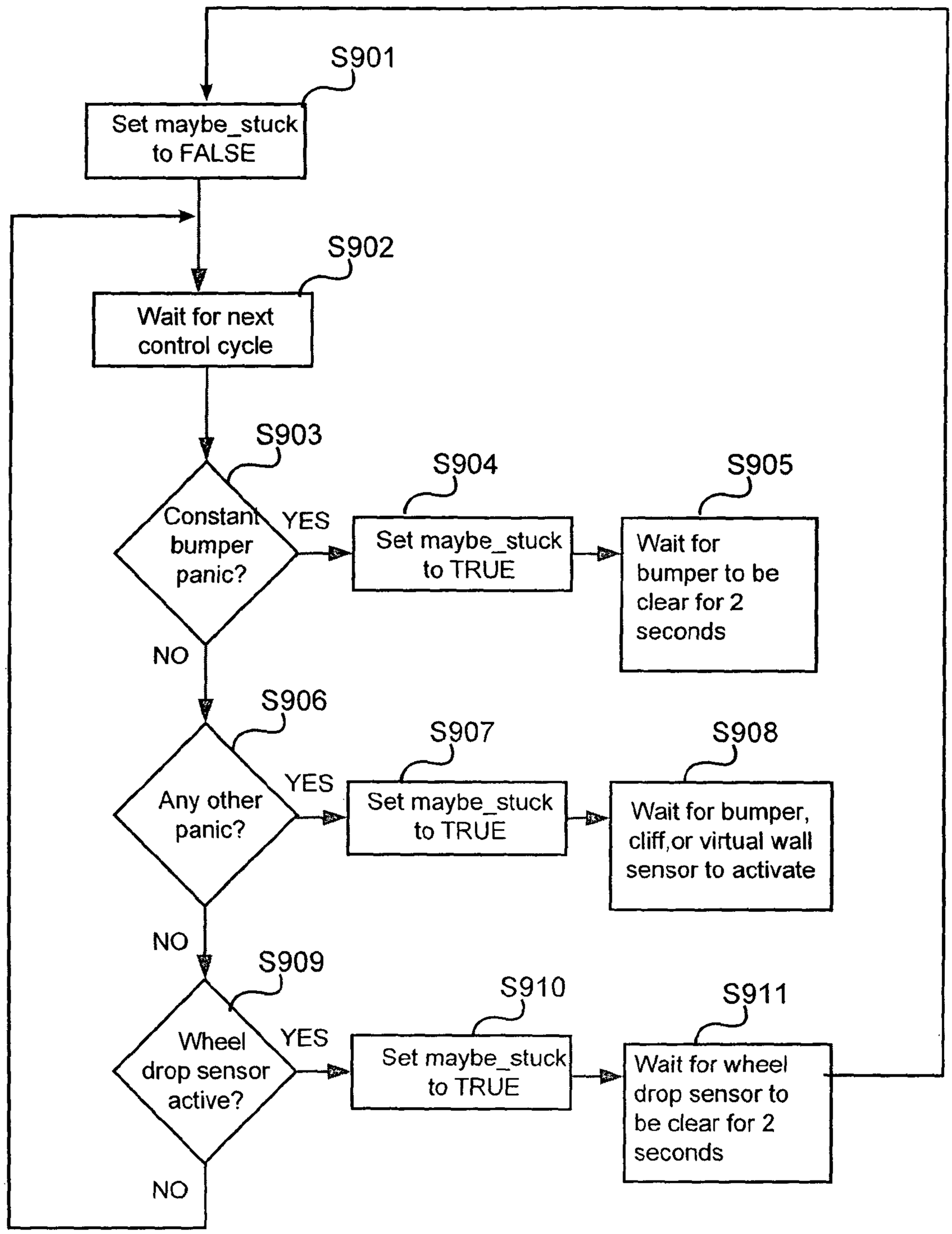
S901
Set maybe_stuck to FALSE
S902
Wait for next control cycle
S903
Constant bumper panic?
YES
S904
Set maybe_stuck to TRUE
S905
Wait for bumper to be clear for 2 seconds
NO
S906
Any other panic?
YES
S907
Set maybe_stuck to TRUE
S908
Wait for bumper, cliff,or virtual wall sensor to activate
NO
S909
Wheel drop sensor active?
YES
S910
Set maybe_stuck to TRUE
S911
Wait for wheel drop sensor to be clear for 2 seconds
NO

FIG. 59

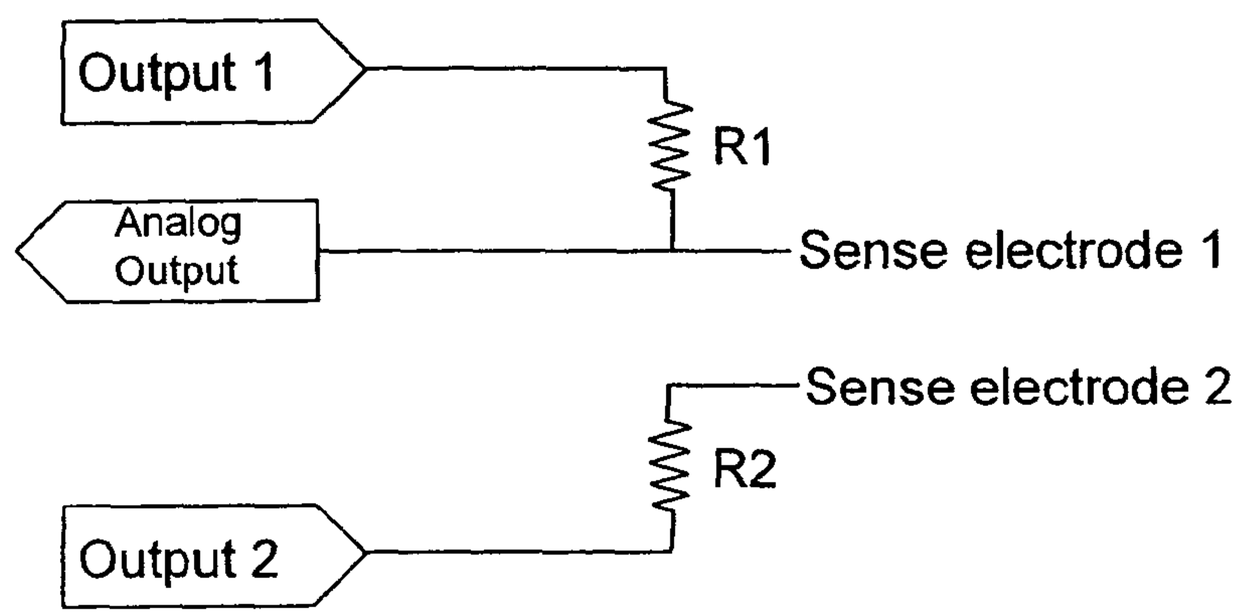
Output 1
R1
Analog Output
Sense electrode 1
Sense electrode 2
R2
Output 2

FIG. 60

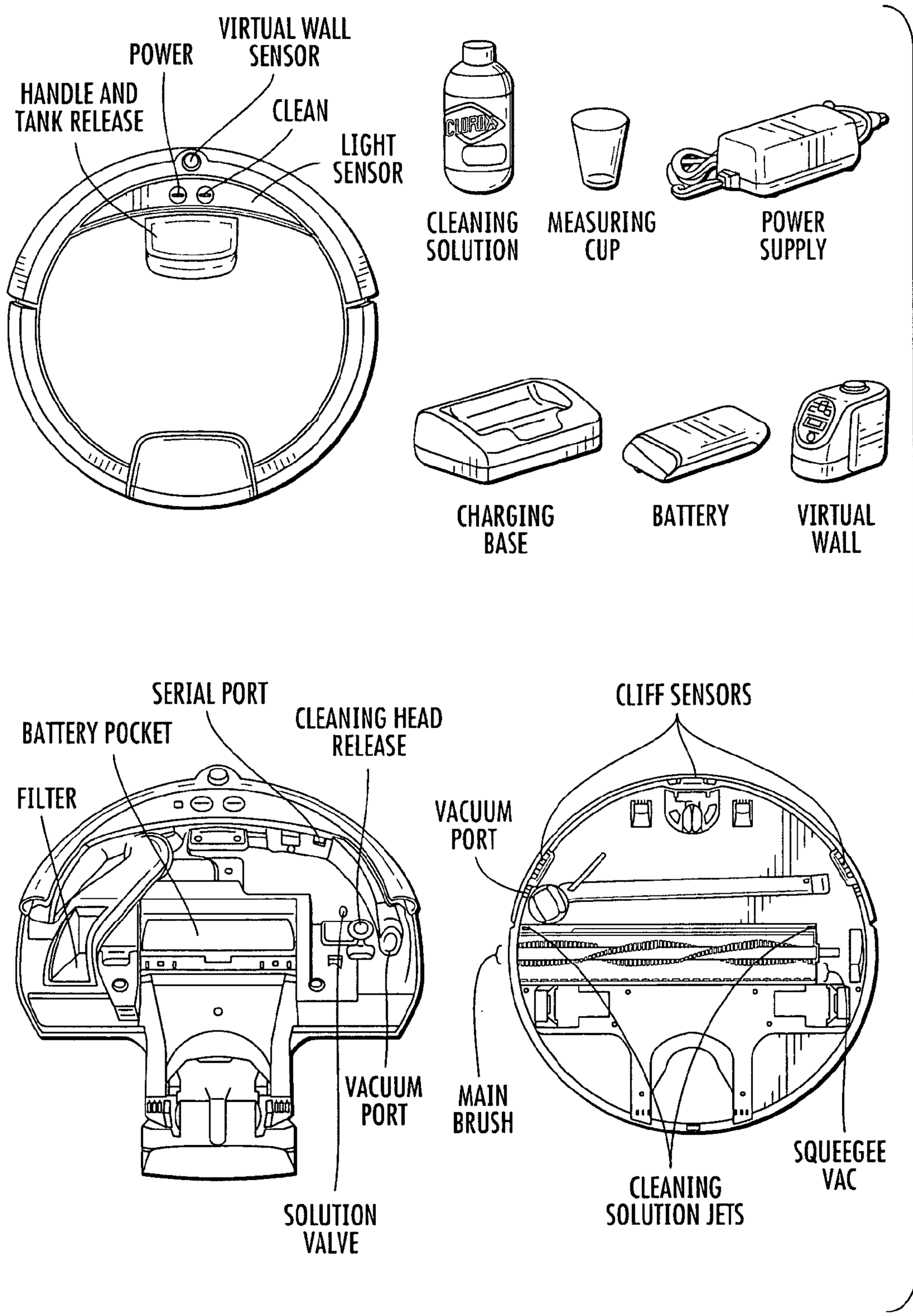
VIRTUAL WALL SENSOR
POWER
HANDLE AND TANK RELEASE
CLEAN
LIGHT SENSOR
CLEANING SOLUTION
MEASURING CUP
POWER SUPPLY
CHARGING BASE
BATTERY
VIRTUAL WALL
SERIAL PORT
BATTERY POCKET
CLEANING HEAD RELEASE
FILTER
VACUUM PORT
MAIN BRUSH
SOLUTION VALVE
CLIFF SENSORS
VACUUM PORT
CLEANING SOLUTION JETS
SQUEEGEE VAC

FIG. 61A

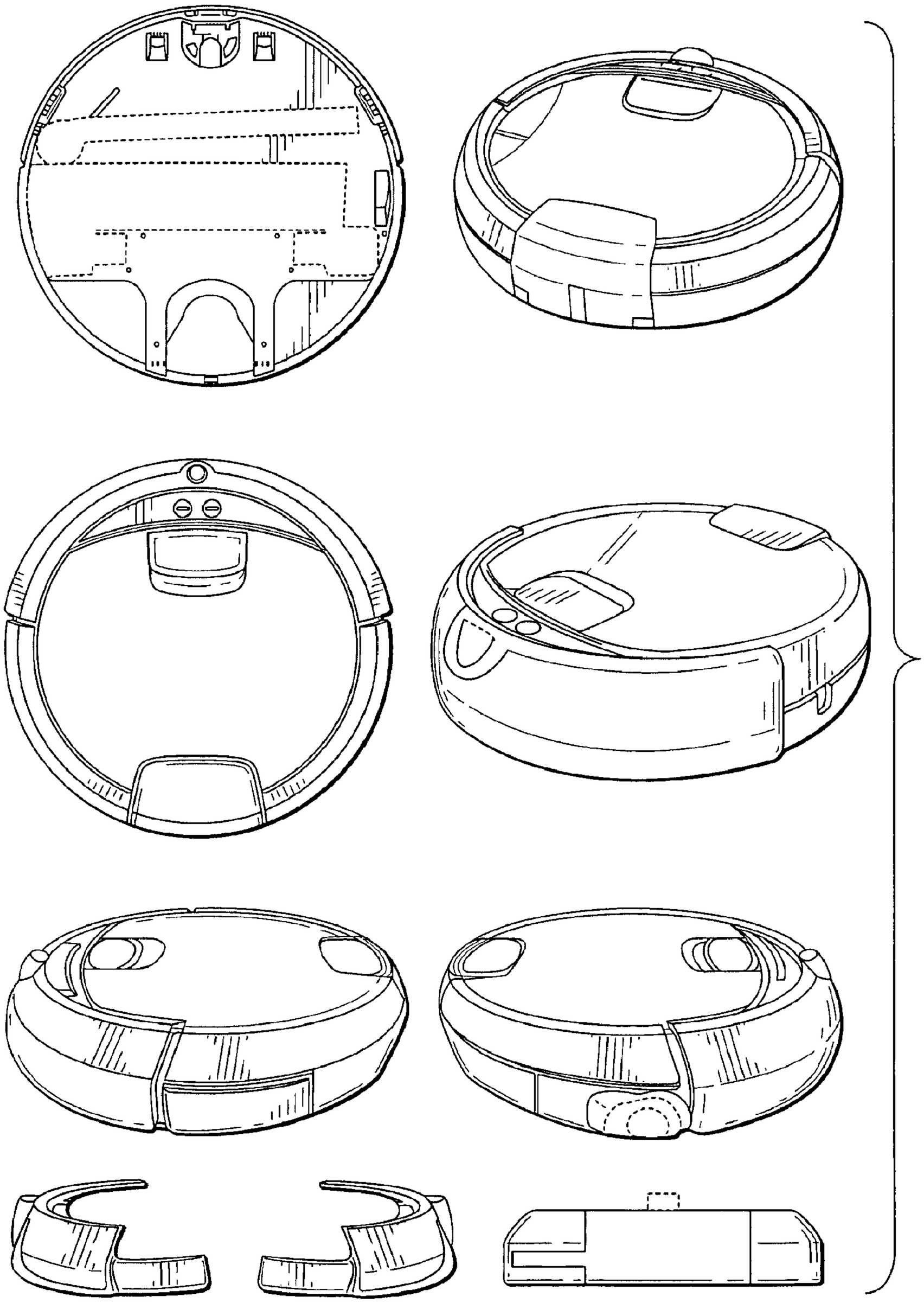

FIG. 61B

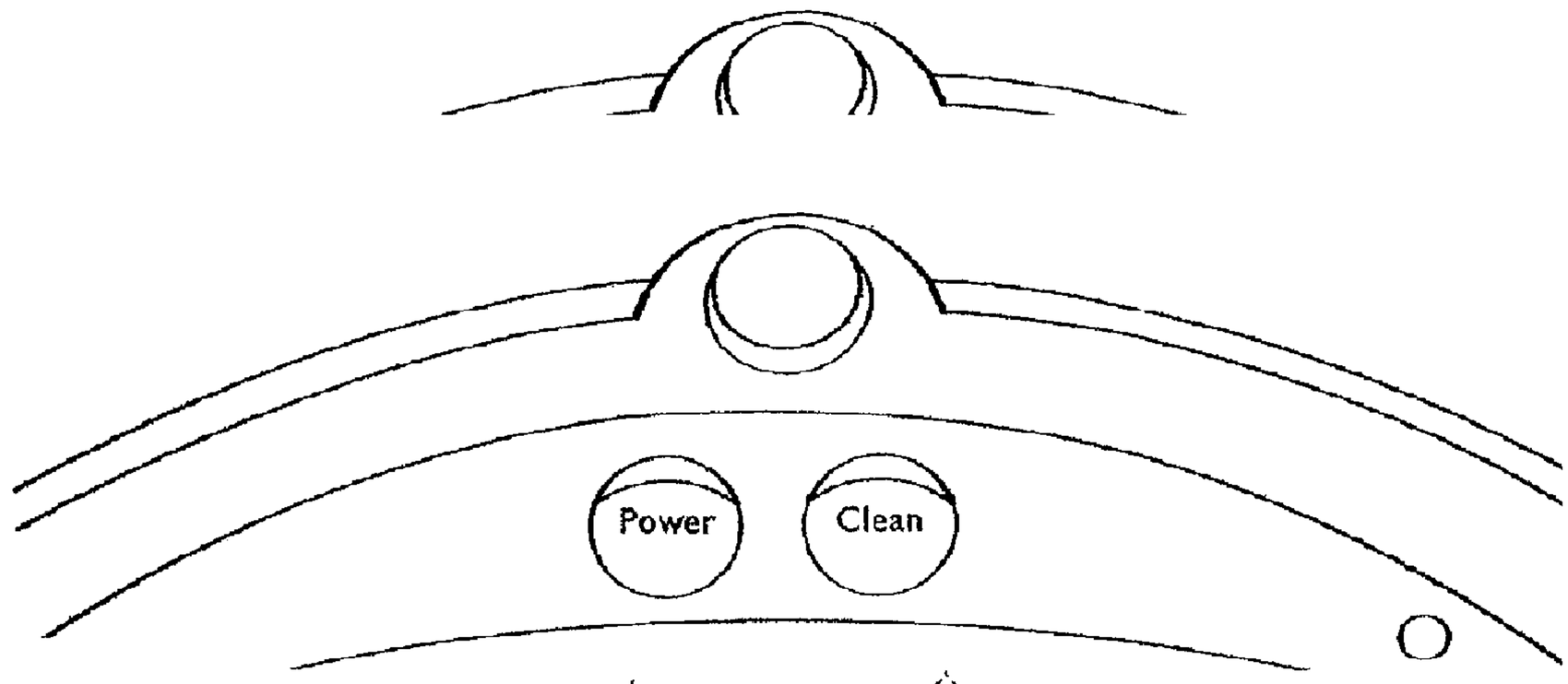

Power Button Light	Battery Status
Red	Battery empty
Green pulse	Charging
Solid green	Fully charged
Blinking Red	Battery not installed

Clean Button Light	What it means
Green	Cleaning
Blue pulse	Scooba is in drying mode, the clean cycle is almost complete
Solid Blue	The Clean tank is empty, the clean cycle is complete

FIG. 62

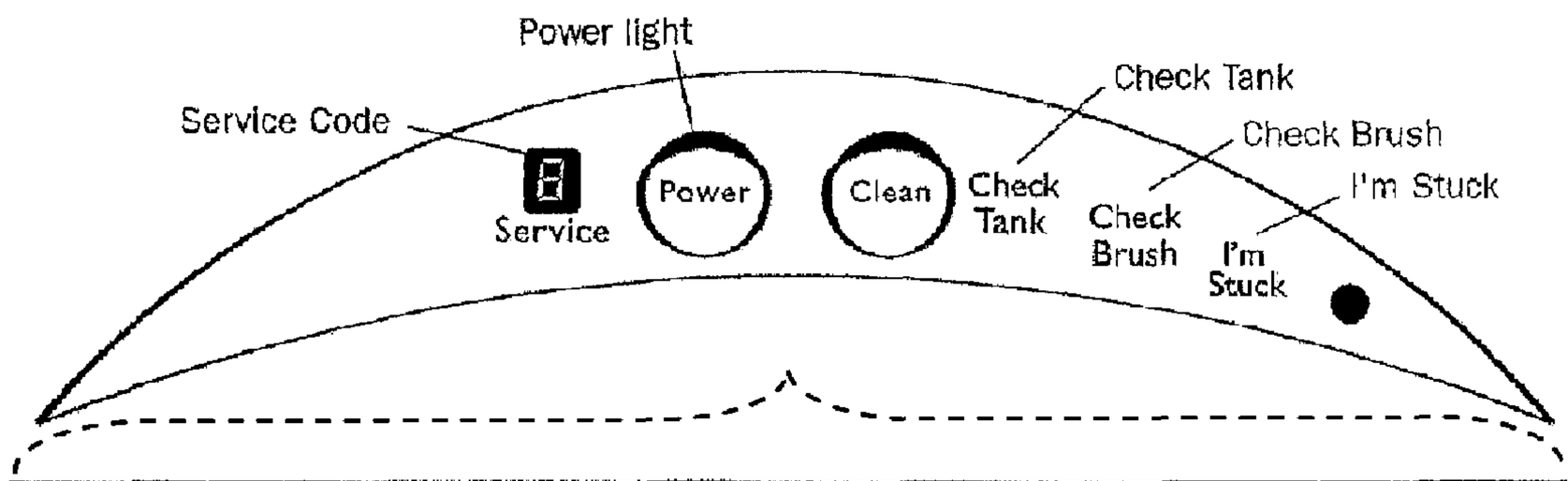

Warning Light	Possible Cause	What To Do
Check Brush	The brush is jammed.	Remove and clean Scooba's brushes and cleaning head. With cleaning head and tanks removed, turn Scooba over, inspect and clean brush shaft.
	The cleaning head is improperly installed.	Remove and replace Scooba's cleaning head. (page 17)
I'm Stuck	Scooba cannot move.	Confirm that Scooba's wheels are unobstructed and that they offer some resistance when turned by hand.
Check Tank *(Yellow)*	The tank not is in the robot.	Place the tank in the Robot and make sure the tank latch is securely closed.
	The filter is missing.	Remove, rinse and replace Scooba's filter. Ensure filter is installed properly. (page 16)
	The Dirty tank is full.	Empty the Dirty tank.
Check Tank *(Blue)*	The Clean tank is empty and your cleaning cycle is complete.	Empty the Dirty tank and rinse. (page 12)
Power *(Red)*	Battery is discharged.	Recharge Scooba's battery. (page 10)

FIG. 63

AUTONOMOUS SURFACE CLEANING ROBOT FOR WET AND DRY CLEANING

CROSS-REFERENCE TO RELATED APPLICATIONS

This application is a continuation of and claims priority under 35 U.S.C. 120 to U.S. application Ser. No. 11/359,961, filed Feb. 21, 2006, which claims priority under 35 U.S.C. §119(e) to U.S. Provisional Application Ser. No. 60/654,838, filed Feb. 18, 2005, the entire disclosure of which is herein incorporated by reference in its entirety. U.S. application Ser. No. 11/359,961 is also a continuation-in-part of and claims priority under 35 U.S.C. §120 to U.S. application Ser. No. 11/134,212, filed May 21, 2005, U.S. application Ser. No. 11/134,213, filed May 21, 2005, U.S. application Ser. No. 11/207,575, filed Aug. 19, 2005, and U.S. application Ser. No. 11/207,620, filed Aug. 19, 2005, now U.S. Pat. No. 7,389,156, the entire disclosures of which are herein incorporated by reference in their entireties. U.S. application Ser. No. 11/359,961 is also a continuation-in-part of and claims priority under 35 U.S.C. §120 to U.S. application Ser. No. 11/207,574 filed Aug. 19, 2005, now U.S. Pat. No. 7,620,476 and U.S. application Ser. No. 11/133,796, filed May 21, 2005.

BACKGROUND OF THE INVENTION

The present invention relates to cleaning devices, and more particularly, to an autonomous surface cleaning robot.

DESCRIPTION OF RELATED ART

Autonomous robot floor cleaning devices having a low enough end user price to penetrate the home floor cleaning market are known in the art. For example, and U.S. Pat. No. 6,883,201 by Jones et al. entitled Autonomous Floor Cleaning Robot, the disclosure of which is herein incorporated by reference it its entirety, discloses an autonomous robot. The robot disclosed therein includes a chassis, a battery power subsystem, a motive drive subsystem operative to propel the autonomous floor cleaning robot over a floor surface for cleaning operations, a command and control subsystem operative to control the cleaning operations and the motive subsystem, a rotating brush assembly for sweeping up or collecting loose particulates from the surface, a vacuum subsystem for suctioning up or collecting loose particulates on the surface, and a removable debris receptacle for collecting the particulates and storing the loose particulates on the robot during operation. Models similar to the device disclosed in the '201 patent are commercially marketed by IROBOT CORPORATION under the trade names ROOMBA RED and ROOMBA DISCOVERY. These devices are operable to clean hard floor surfaces, e.g. bare floors, as well as carpeted floors, and to freely move from one surface type to the other unattended and without interrupting the cleaning process.

In particular, the '201 patent describes a first cleaning zone configured to collect loose particulates in a receptacle. The first cleaning zone includes a pair of counter-rotating brushes engaging the surface to be cleaned. The counter-rotating brushes are configured with brush bristles that move at an angular velocity with respect to floor surface as the robot is transported over the surface in a forward transport direction. The angular movement of the brush bristles with respect to the floor surface tends to flick loose particulates laying on the surface into the receptacle which is arranged to receive flicked particulates.

The '201 patent further describes a second cleaning zone configured to collect loose particulates in the receptacle and positioned aft of the first cleaning zone such that the second cleaning zone performs a second cleaning of the surface as the robot is transported over the surface in the forward direction. The second cleaning zone includes a vacuum device configured to suction up any remaining particulates and deposit them into the receptacle.

In other examples, home use autonomous cleaning devices are disclosed in each of U.S. Pat. No. 6,748,297, and U.S. Patent Application Publication No. 2003/0192144, both by Song et al. and both assigned to Samsung Gwangu Electronics Co. The disclosures of the '297 patent and '144 published application are herein incorporated by reference it their entireties. In these examples, autonomous cleaning robots are configured with similar cleaning elements that utilize rotating brushes and a vacuum device to flick and suction up loose particulates and deposit them in a receptacle.

While each of the above examples provide affordable autonomous floor clearing robots for collecting loose particulates, there is heretofore no teaching of an affordable autonomous floor cleaning robot for applying a cleaning fluid onto the floor to wet clean floors in the home. A need exists in the art for such a device and that need is addressed by the present invention, the various functions, features, and benefits thereof described in more detail herein.

Wet floor cleaning in the home has long been done manually using a wet mop or sponge attached to the end of a handle. The mop or sponge is dipped into a container filled with a cleaning fluid, to absorb an amount of the cleaning fluid in the mop or sponge, and then moved over the surface to apply a cleaning fluid onto the surface. The cleaning fluid interacts with contaminants on the surface and may dissolve or otherwise emulsify contaminants into the cleaning fluid. The cleaning fluid is therefore transformed into a waste liquid that includes the cleaning fluid and contaminants held in suspension within the cleaning fluid. Thereafter, the sponge or mop is used to absorb the waste liquid from the surface. While clean water is somewhat effective for use as a cleaning fluid applied to floors, most cleaning is done with a cleaning fluid that is a mixture of clean water and soap or detergent that reacts with contaminants to emulsify the contaminants into the water. In addition, it is known to clean floor surfaces with water and detergent mixed with other agents such as a solvent, a fragrance, a disinfectant, a drying agent, abrasive particulates and the like to increase the effectiveness of the cleaning process.

The sponge or mop may also be used as a scrubbing element for scrubbing the floor surface, and especially in areas where contaminants are particularly difficult to remove from the floor. The scrubbing action serves to agitate the cleaning fluid for mixing with contaminants as well as to apply a friction force for loosening contaminants from the floor surface. Agitation enhances the dissolving and emulsifying action of the cleaning fluid and the friction force helps to break bonds between the surface and contaminants.

One problem with the manual floor cleaning methods of the prior art is that after cleaning an area of the floor surface, the waste liquid must be rinsed from the mop or sponge, and this usually done by dipping the mop or sponge back into the container filled with cleaning fluid. The rinsing step contaminates the cleaning fluid with waste liquid and the cleaning fluid becomes more contaminated each time the mop or sponge is rinsed. As a result, the effectiveness of the cleaning fluid deteriorates as more of the floor surface area is cleaned.

While the traditional manual method is effective for floor cleaning, it is labor intensive and time consuming. Moreover,

its cleaning effectiveness decreases as the cleaning fluid becomes contaminated. A need exists in the art for an improved method for wet cleaning a floor surface to provide an affordable wet floor cleaning device for automating wet floor cleaning in the home.

In many large buildings, such as hospitals, large retail stores, cafeterias, and the like, there is a need to wet clean the floors on a daily or nightly basis, and this problem has been addressed by the development of industrial floor cleaning "robots" capable of wet cleaning floors. An example of one industrial wet floor cleaning device is disclosed in U.S. Pat. No. 5,279,672 by Betker et al., and assigned to Windsor Industries Inc. The disclosure of the '672 patent is herein incorporated by reference it its entirety. Betker et al. disclose an autonomous floor cleaning device having a drive assembly providing a motive force to autonomously move the wet cleaning device along a cleaning path.

The use of the word "robot" or "autonomous" to describe the Betker et al. device does not necessarily mean "unattended" or fully autonomous—such devices are operator attended for many reasons. One reason such devices are operator attended is because they weight hundreds of pounds and can cause significant damage in the event of a sensor failure or unanticipated control variable. A more significant reason is because devices as proposed by Betker et al. are not physically configured to escape or navigate among confined areas or obstacles, nor are they capable of being programmed to escape or navigate among confined areas or obstacles. For example, the scrubber disclosed in Betker et al. would often encounter the situation where it has insufficient lateral space to turn in accordance with the necessary controlled radius and navigate around an obstacle, and in such a case "alerts the operator that the situation requires assistance," as expressly disclosed by Betker et al. The Betker et al. device is in some ways semi-autonomous, but despite its rich sensor complement, it does not address fundamental principles of autonomous operation, including physical configuration and flexible response to its environment. The Betker et al. device would likely clean for no more than a few minutes before getting stuck and requiring operator intervention.

The Betker et al. device provides a cleaning fluid dispenser for dispensing cleaning fluid onto the floor; rotating scrub brushes in contact with the floor surface for scrubbing the floor with the cleaning fluid, and a waste liquid recovery system, comprising a squeegee and a vacuum system for recovering the waste liquid from the floor surface. While the device disclosed by Betker et al. is usable to autonomously wet clean large floor areas, it is not suitable for the home market, and further, lacks many features, capabilities, and functionality of the present invention as described further herein. In particular, the industrial autonomous cleaning device disclosed by Betker et al. is too large, costly and complex for use in the home and consumes too much electrical power to provide a practical solution for the home wet floor cleaning market. A fundamental shortcoming of Betker is that it appears to be neither physically capable nor flexibly programmed to respond to a complex environment, and is therefore designed to be frequently "rescued" by its attendant operator. Another is that its cleaning techniques may not be effective in a robot that could be carried or manually moved by a person, e.g., less than 20 kg.

Recently, improvements in conventional manual wet floor cleaning in the home are disclosed in U.S. Pat. No. 5,968,281 by Wright et al., and assigned to Royal Appliance Mfg., entitled Method for Mopping and Drying a Floor. The disclosure of the '281 patent is herein incorporated by reference it its entirety. Disclosed therein is a low cost wet mopping system for manual use in the home market. The wet mopping system disclosed by Wright et al. comprises a manual floor cleaning device having a handle with a cleaning fluid supply container supported on the handle. The device includes a cleaning fluid dispensing nozzle supported on the handle for spraying cleaning fluid onto the floor and a floor scrubber sponge attached to the end of the handle for contact with the floor. The device also includes a mechanical device for wringing waste liquid out of the scrubbing sponge. A squeegee and an associated suction device are supported on the end of the handle and used to collect waste liquid up from the floor surface and deposit the waste liquid into a waste liquid container, supported on the handle separate from the cleaning solution reservoir. The device also includes a battery power source for powering the suction device. While Wright et al. describes a self contained wet cleaning device as well as an improved wet cleaning method that separates waste liquid from cleaning fluid, the device is manually operated and appears to lack robotic functionality (motor drive, autonomous control, etc.) and other benefits and features identified in the present disclosure.

BRIEF SUMMARY OF THE INVENTION

The present invention overcomes the problems cited in the prior by providing, inter alia, low cost autonomous robot capable of wet cleaning floors and affordable for home use. The problems of the prior art are addressed by the present invention which provides an autonomous cleaning robot comprising a chassis and a transport drive system configured to autonomously transport cleaning elements over a cleaning surface. The robot is supported on the cleaning surface by wheels in rolling contact with the cleaning surface and the robot includes controls and drive elements configured to control the robot to generally traverse the cleaning surface in a forward direction defined by a fore-aft axis. The robot is further defined by a transverse axis perpendicular to the fore-aft axis.

In particular, the surface cleaning robot includes two separate cleaning zones with a first cleaning zone configured to collect loose particulates from the surface and with a second cleaning zone configured to apply a cleaning fluid onto the surface, scrub the surface and thereafter collect a waste liquid from the surface. The surface cleaning robot may also include at least two containers or compartments, carried thereby, to store cleaning fluid and waste materials. In certain embodiments, one compartment is positioned at least partially directly above (with respect to gravity) the other, so that movements of fluid from one compartment to another do not significantly shift the center of gravity of the robot.

The robot chassis carries a first cleaning zone A comprising cleaning elements arranged to collect loose particulates from the cleaning surface across a cleaning width. The cleaning elements of the first cleaning zone utilize a jet port disposed on a transverse edge of the robot and configured to blow a jet of air across a cleaning width of the robot towards the opposite transverse edge. A vacuum intake port is disposed on the robot opposed to the jet port to suction up loose particulates blown across the cleaning width by the jet port. The cleaning elements of the first cleaning zone may suction up loose particulates, utilize brushes to sweep the loose particulates into receptacle or otherwise remove the loose particulates from the surface.

The robot chassis may also carries a second cleaning zone B comprising cleaning elements arraigned to apply a cleaning fluid onto the surface. The second cleaning zone also includes cleaning elements configured to collect the cleaning fluid up

from the surface after it has been used to clean the surface and may further include elements for scrubbing the cleaning surface and for smearing the cleaning fluid more uniformly over the cleaning surface.

The robot includes a motive drive subsystem controlled by a master control module and powered by a self-contained power module for performing autonomous movement over the cleaning surface. In one aspect, the invention relates to an autonomous cleaning robot having a chassis supported for transport over a cleaning surface, the chassis being defined by a fore-aft axis and a perpendicular transverse axis; a first collecting apparatus attached to the chassis and configured to collect loose particulates from the cleaning surface across a cleaning width, the cleaning width being disposed generally parallel with the transverse axis; a liquid applicator, attached to the chassis and configured to apply a cleaning fluid onto the cleaning surface; and, wherein the arrangement of the first collecting apparatus with respect to the liquid applicator causes the first collecting apparatus to precede the liquid applicator over the cleaning surface when transporting the chassis in a forward direction.

In one embodiment of the above aspect, the autonomous cleaning robot also includes a smearing element attached to the chassis and configured to smear the cleaning fluid applied onto the cleaning surface to more uniformly spread the cleaning fluid over the cleaning surface; wherein the arrangement of the liquid applicator with respect to the smearing element (or spreader brush) causes the liquid applicator to precede the smearing element over the cleaning surface when transporting the chassis in a forward direction. In another embodiment, the robot includes a scrubbing element configured to scrub the cleaning surface; wherein the arrangement of the liquid applicator with respect to the scrubbing element causes the liquid applicator to precede the scrubbing element over the cleaning surface when transporting the chassis in the forward direction. In certain embodiments, the robot also includes a second collecting apparatus configured to collect waste liquid from the cleaning surface, the waste liquid comprising the cleaning fluid applied by the liquid applicator plus any contaminants, removed from the cleaning surface by the clean fluid; wherein the arrangement of the scrubbing element with respect to the second collecting apparatus causes the scrubbing element to precede the second collecting apparatus over the cleaning surface as the chassis is transported in the forward direction.

In certain embodiments of the above aspect, the robot includes a first waste storage container, compartment, or tank attached to the chassis and arranged to receive the loose particulates therein, and/or a second waste storage container attached to the chassis and arranged to receive the waste liquid therein. Some embodiments of the autonomous robot of the above aspect include a cleaning fluid storage container attached to the chassis and configured to store a supply of the cleaning fluid therein and to deliver the cleaning fluid to the liquid applicator. In some embodiments, the cleaning fluid comprises water and/or water mixed with any one of soap, solvent, fragrance, disinfectant, emulsifier, drying agent and abrasive particulates. In some embodiments, the first and second waste containers are configured to be removable from the chassis by a user and to be emptied by the user, and/or said cleaning fluid storage container is configured to be removable from the chassis by a user and to be filled by the user. Certain embodiments include a combined waste storage container, compartment, or tank attached to the chassis and configured to receive the loose particulates from the first collecting apparatus and to receive the waste liquid from the second collecting apparatus therein. In other embodiments the waste storage container is configured to be removable from the chassis by a user and to be emptied by the user. Still other embodiments include a cleaning fluid storage container, attached to the chassis and configured to store a supply of the cleaning fluid therein and to deliver the cleaning fluid to the liquid applicator, and in some cases, said cleaning fluid storage container is configured to be user removable from the chassis and to be filled by the user.

In some embodiments of the above aspect, the autonomous cleaning robot further includes an integrated liquid storage container, attached to the chassis, and formed with two separate container portions, compartments, bladder(s), or tanks comprising; a waste storage container portion configured to receive the loose particulates from the first collecting apparatus and the waste liquid from the second collecting apparatus therein; and, a cleaning fluid storage container, compartment, bladder, or tank portion configured to store a supply of the cleaning fluid therein and to deliver the cleaning fluid to the liquid applicator. In other embodiments, the autonomous cleaning robot of the above aspect includes the integrated liquid storage container configured to be removable from the chassis by a user and for the cleaning fluid storage container to be filled by and for the waste storage container to be emptied by the user. In some embodiments of the above aspect, the robot includes a second collecting apparatus configured to collect waste liquid from the cleaning surface, the waste liquid comprising the cleaning fluid applied by the liquid applicator plus any contaminants, removed from the cleaning surface by the cleaning fluid; and, wherein the arrangement of the liquid applicator with respect to the second collecting apparatus causes the liquid applicator to precede the second collecting apparatus over the cleaning surface as the chassis is transported in the forward direction. Certain embodiments of the above aspect include a smearing element or spreader brush attached to the chassis and configured to smear the cleaning fluid applied onto the cleaning surface to more uniformly spread the cleaning fluid over the cleaning surface; and, wherein the arrangement of the liquid applicator with respect to the smearing element causes the liquid applicator to precede the smearing element or spreader brush over the cleaning surface when transporting the chassis in a forward direction.

In some embodiments, the robot includes a waste storage container, compartment, or tank attached to the chassis and configured to receive the loose particulates from the first collecting apparatus and to receive the waste liquid from the second collecting apparatus therein, and in certain cases, the waste storage container is configured to be removable from the chassis by a user and to be emptied by the user. Some embodiments of the robot include a cleaning fluid storage container, attached to the chassis and configured to store a supply of the cleaning fluid therein and to deliver the cleaning fluid to the liquid applicator, and in some cases, said cleaning fluid storage container is configured to be removable from the chassis by a user and to be filled by the user. In other embodiments, the robot of the above aspect includes an integrated liquid storage container or tank, attached to the chassis, and formed with two separate container portions comprising; a waste storage container portion configured to receive the loose particulates from the first collecting apparatus and to receive the waste liquid from the second collecting apparatus therein; and, a cleaning fluid storage container, compartment, bladder, or tank configured to store a supply of the cleaning fluid therein and to deliver the cleaning fluid to the liquid applicator. In certain embodiments, said integrated liquid storage container or tank is configured to be removable from the chassis by a user and for the cleaning fluid storage con-

tainer to be filled by and for the waste storage container or tank to be emptied by the user.

Some embodiments of the above aspect include a motive drive subsystem attached to chassis for transporting the chassis over the cleaning surface; a power module attached to the chassis for delivering electrical power to each of a plurality of power consuming subsystems attached to the chassis; and, a master control module attached to the chassis for controlling the motive drive module, the first collecting apparatus, and the liquid applicator, to autonomously transport the robot over the cleaning surface and to autonomously clean the cleaning surface. Some embodiments may also include a sensor module configured to sense conditions external to the robot and to sense conditions internal to the robot and to generate electrical sensor signals in response to sensing said conditions; a signal line for communicating the electrical sensor signals to the master control module; and, a controller incorporated within the master control module for implementing predefined operating modes of the robot in response to said conditions.

Some embodiments include a user control module configured to receive an input command from a user and to generate an electrical input signal in response to the input command; a signal line for communicating the electrical input signal to the master control module; and, a controller incorporated within the master control module for implementing predefined operating modes of the robot in response to the input command. In certain embodiments, the autonomous cleaning robot includes an interface module attached to the chassis and configured to provide an interface between an element external to the robot and at least one element attached to the chassis. In some embodiments, the element external to the robot comprises one of a battery-charging device and a data processor. Some embodiments include an interface module attached to the chassis and configured to provide an interface between an element external to the robot and at least one element attached to the chassis. In some embodiments, the element external to the robot comprises one of a battery-charging device, a data processor, a device for autonomously filling the cleaning fluid storage container with cleaning fluid, and a device for autonomously emptying the waste liquid container.

Certain embodiments of robots of the above aspect include an air jet port, attached to the chassis disposed at a first edge of the cleaning width and configured to blow a jet of air across the cleaning width proximate to the cleaning surface, to thereby force loose particulates on the cleaning surface to move away from the first edge in a direction generally parallel with the transverse axis; an air intake port, attached to the chassis and disposed at a second edge of the cleaning width, opposed from the first edge and proximate to the cleaning surface for suctioning up the loose particulates; a waste storage container configured to receive the loose particulates from the air intake port; and a fan assembly configured to generate a negative pressure within the waste storage container, compartment, or tank. In some embodiments, the fan assembly is further configured to generate a positive air pressure at the air jet port.

In other embodiments the second collecting apparatus includes a squeegee attached to the chassis and formed with a longitudinal ridge disposed proximate to the cleaning surface and extending across the cleaning width for providing a liquid collection volume at a forward edge of the ridge, said longitudinal ridge collecting waste liquid within the liquid collection volume as the chassis is transported in the forward direction; a vacuum chamber partially formed by the squeegee disposed proximate to the longitudinal ridge and extending across the cleaning width; a plurality of suction ports passing through the squeegee for providing a plurality of fluid passages for fluidly connecting the liquid collection volume and the vacuum chamber; and a vacuum for generating a negative air pressure within the vacuum chamber for drawing waste liquid collected within the liquid collection volume into the vacuum chamber. Some additional embodiments also include a waste storage container configured to receive the waste liquid from the vacuum chamber, at least one fluid conduit fluidly connecting the vacuum chamber and the waste storage container, compartment or tank; and a fan assembly configured to generate a negative air pressure within the waste storage container and the vacuum chamber to thereby suction waste liquid up from the cleaning surface and deposit the waste liquid in the waste storage container. Other embodiments of the second collecting apparatus incorporate a squeegee attached to the chassis and formed with a longitudinal ridge disposed proximate to the cleaning surface and extending across the cleaning width for providing a liquid collection volume at a forward edge of the ridge, said longitudinal ridge collecting waste liquid within the liquid collection volume as the chassis is transported in the forward direction; a vacuum chamber partially formed by the squeegee disposed proximate to the longitudinal ridge and extending across the cleaning width; a plurality of suction ports passing through the squeegee for providing a plurality of fluid passages for fluidly connecting the liquid collection volume and the vacuum chamber; and a vacuum for generating a negative air pressure within the vacuum chamber for drawing waste liquid collected within the liquid collection volume into the vacuum chamber.

Still other embodiments of the above aspect include a waste storage tank (or compartment) configured to receive the waste liquid from the vacuum chamber, at least one fluid conduit fluidly connecting the vacuum chamber and the waste storage container or tank; and, a fan assembly configured to generate a negative air pressure within the waste storage container and the vacuum chamber to thereby suction waste liquid from the cleaning surface and deposit the waste liquid in the waste storage container or tank. In some embodiments, the fan assembly is configured to generate a positive air pressure at the air jet port.

In another aspect, the invention relates to an autonomous cleaning robot for transporting cleaning elements over a cleaning surface including a chassis, supported in rolling contact with the cleaning surface for transporting the chassis in a forward direction defined by a fore-aft axis, the chassis being further defined by a transverse axis; a first cleaning zone comprising cleaning elements attached to the chassis and arranged to collect loose particulates from the cleaning surface across a cleaning width, the cleaning width being disposed generally perpendicular with the fore-aft axis; a second cleaning zone comprising cleaning elements attached to the chassis and arranged to apply a cleaning fluid onto the cleaning surface and to collect a waste liquid from the cleaning surface across the cleaning width, said waste liquid comprising the cleaning fluid plus any contaminants removed from the cleaning surface by the cleaning fluid; and a motive drive subsystem controlled by a master control module and powered by a power module, the motive drive subsystem, master control module and power module each being electrically interconnected and attached to the chassis configured to autonomously transporting the robot over the cleaning surface and to clean the cleaning surface. In some embodiments of this aspect, the robot is configured with a circular cross-section having a vertical center axis and wherein said fore-aft axis, said transverse axis and said vertical axis are mutually perpendicular and wherein the motive drive subsystem is

configured to rotate the robot about the center vertical axis for changing the orientation of the forward travel direction.

In another aspect, the invention relates to a surface cleaning apparatus having a chassis defined by a fore-aft axis and a perpendicular transverse axis, the chassis being supported for transport over the surface along the fore-aft axis, the chassis including a first collecting apparatus attached thereto and configured to collect loose particulates from the surface over a cleaning width disposed generally parallel with the transverse axis, the first collecting apparatus including an air jet port configured to expel a jet of air across the cleaning width; an air intake port configured to draw air and loose particulates in; wherein the air jet port and the air intake port are disposed at opposing ends of the cleaning width with the air jet port expelling the jet of air generally parallel with the surface and generally directed toward the air intake port. In an embodiment of the above aspect, the first collecting apparatus further includes a channel formed with generally opposed forward and aft edges, extending generally parallel with the transverse axis across the cleaning width, and generally opposed left and right edges, extending generally orthogonal to said forward and aft edges; wherein the air jet port is disposed at one of said left and right edges and the air intake port is disposed at the other of said left and right edges. In other embodiments, the surface cleaning apparatus further includes a first compliant doctor or air flow guide blade disposed across the cleaning width and fixedly attached to a bottom surface of the chassis proximate to said aft edge and extending from said bottom surface to the surface for guiding the jet of air and loose particulates across the cleaning width.

In other embodiments of the above aspect, the surface cleaning apparatus further includes a second compliant doctor or air flow guide blade fixedly attached to said bottom surface and extending from said bottom surface to the surface, for guiding the jet of air and loose particulates into the air intake port. In still other embodiments, the apparatus includes a rotary fan motor having a fixed housing and a rotating shaft extending therefrom; a fan impeller configured to move air when rotated about a rotation axis, said fan impeller being fixedly attached to the rotating shaft for rotation about the rotation axis by the fan motor; a housing for housing the fan impeller in a hollow cavity formed therein and for fixedly supporting the motor fixed housing thereon, the housing being further configured with an air intake port through which air is drawn in to the cavity, and an air exit port through which air is expelled out of the cavity when the impeller is rotated; and a first fluid conduit fluidly connected between the fan air intake port and the air intake port of said first collecting apparatus; therein each of the elements is attached to the chassis. In some embodiments, the apparatus includes a waste storage container attached to the chassis and fluidly interposed within said first fluid conduit between the fan air intake port and the air intake port. In some embodiments, the waste storage container is configured to be removable from the chassis by a user and to be emptied by the user.

Still other embodiments include an air filter element interposed within said first fluid conduit between the waste storage container and the fan air intake port for filtering loose contaminates from air being drawn in through the fan air intake port, and may also include a second fluid conduit fluidly connected between the fan exit port and the air jet port of said first collecting apparatus. In other embodiments, the surface cleaning apparatus further includes a second collecting apparatus attached to the chassis and disposed aft of the first collecting apparatus for collecting liquid from the surface over the cleaning width. In some embodiments, the second collecting zone includes a squeegee fixedly attached to the chassis aft of the first collecting apparatus and extending from a bottom surface of the chassis to the surface across the cleaning width for collecting liquid in a liquid collection volume formed between the squeegee and the surface, the squeegee further forming a vacuum chamber and providing a plurality of suction ports disposed across the cleaning width and fluidly connecting the vacuum chamber and the liquid collection volume; and a vacuum for generating a negative air pressure inside the vacuum chamber to thereby draw liquid into the vacuum chamber through the plurality of suction ports fluidly connected with the collection volume.

Other embodiments of the surface cleaning apparatus of the above aspect include a rotary fan motor having a fixed housing and a rotating shaft extending therefrom; a fan impeller configured to move air when rotated about a rotation axis, said fan impeller being fixedly attached to the rotating shaft for rotation about the rotation axis by the fan

motor; a housing for housing the fan impeller in a hollow cavity formed therein and for fixedly supporting the motor fixed housing thereon, the housing being further configured with an air intake port through which air is drawn in to the cavity, and an air exit port through which air is expelled out of the cavity when the impeller is rotated; a first fluid conduit fluidly connected between the fan air intake port and the air intake port of said first collecting apparatus; and a third fluid conduit fluidly connected between the fan air intake port and the vacuum chamber; wherein these elements are attached to the chassis. The surface cleaning apparatus may also include a second fluid conduit fluidly connected between the fan exit port and the air jet port of said first collecting apparatus, and/or a waste storage container or tank attached to the chassis and configured to store the liquid collected from the surface. Still other embodiments utilize a waste storage container attached to the chassis and configured to store the liquid collected from the surface, said waste storage container or tank being fluidly interposed within said third fluid conduit. In some embodiments, the cleaning apparatus includes a waste storage container attached to the chassis and configured to store the liquid collected from the surface, said waste storage container being fluidly interposed within said first and said third fluid conduits. In certain cases, said waste storage container or tank includes a sealed waste container for storing loose particulates collected by the first collecting apparatus and for storing liquid collected by the second collecting apparatus and having at least one access port formed therein for emptying waste from the container; and a plenum incorporated into a top wall of the sealed container such that the plenum is disposed vertically above the sealed waste container during operation of the cleaning apparatus; and wherein the plenum is configured with ports for fluidly interposing within each of said first, said second and said third fluid conduits.

In some embodiments, the waste storage container is configured to be removable from the chassis by a user and to be emptied by the user. Certain other embodiments include a cleaning fluid applicator assembly, attached to the chassis between the first collecting apparatus and the second collecting apparatus for applying a cleaning fluid onto the surface across the cleaning width; and a sealed cleaning fluid storage container or tank for holding a supply of the cleaning fluid therein the storage container including at least one access port formed therein for filling the container with the cleaning fluid. In other embodiments, said sealed waste container and said sealed cleaning fluid container are integrated into a liquid storage container module and wherein the integrated liquid storage container module is configured to be removable from the chassis by a user for filling with cleaning fluid and for

emptying waste therefrom. In some embodiments, the surface cleaning apparatus further includes a smearing element attached the chassis aft of the liquid applicator assembly and configured to smear the cleaning fluid across the cleaning width; and a scrubbing element, scrub brush, wiper, or wipe cloth attached to the chassis aft of the smearing element or spreader brush for scrubbing the surface across the cleaning width. In some embodiments, the surface cleaning apparatus further comprises a motive drive subsystem controlled by a master control module and power by a power module, each attached to the chassis, for autonomously transporting the surface cleaning apparatus over the surface. A pad, cloth, or other absorbent wiper extending essentially across the cleaning width may be placed before or after the cleaning head to prepare the surface or absorb wetness behind the cleaning head as appropriate. The entire cleaning head is formed from materials that withstand water and temperature extremes sufficient for the cleaning head to be "dishwasher safe."

In other embodiments, the surface cleaning apparatus further includes a sensor module configured to sense conditions and to generate electrical sensor signals in response to sensing said conditions; a signal line for communicating the electrical sensor signals to the master control module; and a controller incorporated within the master control module for implementing predefined operating modes in response to sensing said conditions. Still other embodiments include a motive drive subsystem controlled by a master control module and power by a power module, each attached to the chassis, for autonomously transporting the surface cleaning apparatus over the surface. Other embodiments of the surface cleaning apparatus further include a sensor module configured to sense conditions and to generate electrical sensor signals in response to sensing said conditions; a signal line for communicating the electrical sensor signals to the master control module; and a controller incorporated within the master control module for implementing predefined operating modes in response to sensing said conditions.

In yet another aspect, the invention relates to a surface cleaning apparatus having an autonomous transport drive subsystem controlled by a master control module, a sensor module for sensing conditions, a power module and cleaning elements all supported on a chassis and powered by the power module for moving the chassis over the surface in accordance with predefined operating modes and in response to conditions sensed by the sensor module, the elements being configured with a cleaning width disposed generally orthogonal to a forward transport direction and wherein the cleaning elements comprise; a first collecting apparatus for collecting loose particulates from the surface across the cleaning width, said first collecting apparatus A being positioned on the chassis to advance over the surface first as the chassis is transported in a forward transport direction; a cleaning fluid applicator for applying cleaning fluid onto the surface across the cleaning width, said cleaning fluid applicator being positioned on the chassis to advance over the surface second as the chassis is transported in a forward transport direction; a smearing element for smearing the cleaning fluid applied onto the surface across the cleaning width, said smearing element or spreader brush being positioned on the chassis to advance over the surface third as the chassis is transported in a forward transport direction; an active scrubbing element for actively scrubbing the surface across the cleaning width, said active scrubbing element being positioned on the chassis to advance over the surface fourth as the chassis is transported in a forward transport direction; a second collecting apparatus for collecting waste liquid from the surface, said second collecting apparatus being positioned on the chassis to advance over the surface fifth as the chassis is transported in a forward transport direction; and, an integrated storage container or tank module comprising a waste storage container for storing loose particulates collected by said first collecting apparatus and waste liquid collected by said second collecting apparatus, a cleaning fluid supply container for storing a supply of the cleaning fluid, and wherein the integrated storage container or tank module is configured to be removed from the chassis by a user, filled with cleaning fluid and emptied of waste and then reinstalled onto the chassis by the user.

In yet an additional aspect, the invention relates to a surface cleaning apparatus having a chassis defined by a fore-aft axis and a perpendicular transverse axis for supporting cleaning elements thereon and for transporting the cleaning elements over the surface along the fore-aft axis and wherein the cleaning elements are disposed to clean across a cleaning width disposed generally orthogonal to the fore-aft axis with a left end and a right end defining opposing edges of the cleaning width; and a liquid applicator comprising at least one nozzle disposed at one of said left end and said right end for ejecting cleaning fluid therefrom, said cleaning fluid being ejected with sufficient volume and pressure to distribute cleaning fluid across the cleaning width. In certain embodiments of the above aspect, the cleaning fluid comprises water and/or any one of soap, solvent, fragrance, disinfectant, emulsifier, drying agent and abrasive particulates.

In some embodiments of the above aspect, the apparatus includes a smearing element attached to the chassis aft of the position of the at least one nozzle and extending from the chassis to the surface across the cleaning width for smearing the cleaning fluid, and may include a scrubbing element attached to the chassis aft of the position of the at least one nozzle and extending from the chassis to the surface across the cleaning width for scrubbing the surface. In some embodiments, the scrubbing element is attached to the chassis aft of the position of the at least one nozzle and extending from the chassis to the surface across the cleaning width for scrubbing the surface. The cleaning apparatus may also include a collecting apparatus attached to the chassis aft of the position of the at least one nozzle and extending from the chassis to the surface across the cleaning width for collecting waste liquid from the surface. In some embodiments, the liquid applicator a first nozzle disposed at the left end for ejecting cleaning fluid therefrom, said cleaning fluid being ejected from the first nozzle with sufficient volume and pressure to distribute cleaning fluid across the cleaning width, a second nozzle disposed at the right end for ejecting cleaning fluid therefrom, said cleaning fluid being ejected from the second nozzle with sufficient volume and pressure to distribute cleaning fluid across the cleaning width; and wherein the first nozzle and the second nozzle are co-located on the fore-aft axis.

In certain embodiments of the above aspect each of the first and second nozzles ejects a discrete burst cleaning fluid in accordance with a burst frequency and wherein the burst frequency of the first nozzle is substantially opposite in phase with respect to the burst frequency of the second nozzle. In some embodiments, the surface cleaning apparatus also includes an autonomous transport drive subsystem, a sensor module for sensing conditions and a power module all supported by the chassis and controlled by a master control module to autonomously move the cleaning elements substantially over the entire surface over the surface in accordance with predefined operating modes and in response to conditions sensed by the sensor module. Still other embodiments utilize an autonomous transport drive subsystem, a sensor module for sensing conditions and a power module all supported by the chassis and controlled by a master control

module to autonomously move the cleaning elements substantially over the entire surface over the surface in accordance with predefined operating modes and in response to conditions sensed by the sensor module.

Other embodiments of the above aspect include an autonomous transport drive subsystem, a sensor module for sensing conditions and a power module all supported by the chassis and controlled by a master control module to autonomously move the cleaning elements substantially over the entire surface over the surface in accordance with predefined operating modes and in response to conditions sensed by the sensor module. In some embodiments, the master control module is configured to vary the burst frequency in accordance with a desired rate for applying cleaning fluid onto surface, and in some cases, the master control module is configured to vary the burst frequency to apply cleaning fluid onto the surface at a substantially uniform volume of approximately 2 ml per square foot.

In some embodiments, the surface cleaning apparatus also includes a liquid storage container, carried on the chassis, for storing a supply of the cleaning fluid therein; a diaphragm pump assembly configured with a first a first pump portion for drawing cleaning fluid from the container and for delivering the cleaning fluid to the at least one nozzle; and a mechanical actuator for mechanically actuating the first pump portion. Still other embodiments include an autonomous transport drive subsystem, a sensor module for sensing conditions and a power module all supported by the chassis and controlled by a master control module to autonomously move the cleaning elements substantially over the entire surface over the surface in accordance with predefined operating modes and in response to conditions sensed by the sensor module; a liquid storage container, carried on the chassis, for storing a supply of the cleaning fluid therein; a diaphragm pump assembly having a first a first pump portion for drawing cleaning fluid from the container and for delivering the cleaning fluid to the first nozzle and a second pump portion for drawing cleaning fluid from the container and for delivering the cleaning fluid to the second nozzle; and a mechanical actuator for mechanically actuating the first pump portion and the second pump portion.

In certain embodiments of the above aspect, the diaphragm pump assembly includes a flexible element mounted between a non-flexible upper chamber element and a non-flexible lower chamber element, said flexible element being formed with a first pump chamber and a first actuator nipple attached thereto and a second pump chamber and a second actuator nipple attached thereto; an actuator link pivotally attached to the pump assembly for pivoting between a first actuator position and a second actuator position, the actuator link being fixedly attached to each of said first and said second actuator nipples and wherein movement of the actuator link toward the first actuator position decreases the volume the first pump chamber and increases the volume of the second pump chamber and further wherein movement of the actuator link toward the second actuator position increases the volume the first pump chamber and decreases the volume of the second pump chamber; a cam element configured with a circumferential cam profile and supported to move the actuator link between the first actuator position and the second actuator position; and a cam rotary drive, controlled by the master controller, for rotating the cam element in accordance with a cam rotary drive pattern.

In another aspect, the invention relates to a method for cleaning a surface with a cleaning apparatus, the method including the steps of transporting a chassis over the surface in a forward transport direction defined by a defined by a fore-aft axis, said chassis including cleaning elements supported thereon, and wherein the cleaning elements have a cleaning width disposed generally orthogonal to the fore-aft axis and wherein the cleaning width has a left end and an opposing right end; and ejecting a volume of cleaning fluid from a first nozzle attached to the chassis at one of said left end and said right end, said first nozzle being configured to eject cleaning fluid therefrom, said cleaning fluid being ejected with sufficient volume and pressure to distribute cleaning fluid across the cleaning width. In certain embodiments, the method may also include ejecting a volume of cleaning fluid from a second nozzle attached to the chassis at the other of said left end and said right end and co-located on the fore-aft axis with respect to the first nozzle, said second nozzle being configured to eject cleaning fluid therefrom, said cleaning fluid being ejected with sufficient volume and pressure to distribute cleaning fluid across the cleaning width; and ejecting cleaning fluid from each of the first nozzle and the second nozzle in discrete bursts of cleaning fluid in accordance with a burst frequency and wherein the burst frequency of the first nozzle is substantially opposite in phase with respect to the burst frequency of the second nozzle.

In still other embodiments, the method includes smearing the cleaning fluid across the cleaning width using a smearing element or spreader brush attached to the chassis aft of the colocated position of the first nozzle and the second nozzle, said smearing element extending across the cleaning width. Other embodiments may include scrubbing the surface across the cleaning width using a scrubbing element, scrub brush, wiper, or wipe cloth attached to the chassis aft of the co-located position of the first nozzle and the second nozzle, said scrubbing element extending across the cleaning width. Still other embodiments include collecting waste liquid from the surface across the cleaning width using a collecting apparatus attached to the chassis aft of the co-located position of the first nozzle and the second nozzle, said collecting apparatus extending across the cleaning width. In some embodiments of the method of the above aspect, the chassis further includes an autonomous transport drive subsystem, a sensor module for sensing conditions and a power module all supported thereon and controlled by a master control module and wherein transporting the chassis over the surface further includes controlling the transport drive subsystem in accordance with predefined operating modes and in response to conditions sensed by the sensor module to transport the cleaning elements substantially over the entire surface.

According to one aspect of the present invention, a surface treatment robot includes a robot body having an outer perimeter formed substantially as a shape of constant width, driven forward by at least one circulating member, and a dispensed material compartment that holds material to be dispensed by the robot. A wet cleaning head that employs one or more wet cleaning member(s) to clean along a cleaning width line of the robot with the assistance of dispensed material, the wet cleaning head defining a cleaning width. A waste material compartment holds material picked up by the robot. Each of the dispensed material compartment and waste material compartment being shaped and positioned to place the center of gravity of the dispensed material compartment volume less than ½ of the cleaning width from the center of gravity of the waste material compartment volume.

For example, one embodiment of the robot has a cleaning width of about 30 cm, and each of these centers of gravity is less than 15 cm from the other. The center of gravity of the volume is readily understood as the center of the empty volume; however, it may also be understood as the center of gravity of a body of fluid filling the volume (most fluids

discussed herein would approximate the specific gravity of water). Surface treatment includes cleaning and other treatments as discussed herein. The shapes of constant width are also defined herein, noting that not all such shapes are regular, and that one embodiment of the robot is substantially cylindrical. The wet cleaning member includes brushes, sponges, wipers, and the like. A circulating member would include a rotating wheel, a rotating brush, and/or one or more circulating belts or webs. The material need not be wet, although most would be.

Optionally, each of the dispensed material compartment and waste material compartment is shaped and positioned to place the combined center of gravity of the dispensed material compartment volume and the waste material compartment volume less than ½ the cleaning width from a center of the at least one circulating member. The center of a rotating brush would be the midpoint along the axis, the center of a rotating belt would be along the midpoint of the contact area with the surface. Further optionally, each of the dispensed material compartment and waste material compartment are shaped and positioned to place of the center of gravity of the dispensed material compartment volume substantially directly above or below the center of gravity of the waste material compartment volume. "Substantially directly" means, in one instance, above or below one another and vertical normals from each center of gravity are within ¼ of the cleaning width from one another.

According to another aspect of the invention, a surface treatment robot includes a robot body having an outer perimeter formed substantially as a shape of constant width, and at least two circulating drive members that drive the robot body forward and steer the robot body. A dispensed fluid compartment that holds fluid to be dispensed by the robot; and a powered scrubber drives at least one scrubbing element to clean, with the assistance of dispensed fluid, substantially along a line of maximum width of the shape of constant width, the driven scrubbing element extending to substantially within 1 cm of a tangential edge of the robot body. By placing the scrubber along the line of maximum width of a constant width shape such as a cylinder, the edge of the cleaning area can be brought to the edge of the robot, permitting the robot to edge clean within 1 cm of a wall. Placing the wheels along the line of maximum width would prevent this. Again, circulating includes rotating members such as wheels or brushes, but also circulating belts or webs.

If the cleaning head is along the maximum width, the widest cleaning head can be obtained by placing the least two circulating drive members are placed along a line at which the width of the robot is less than the maximum width of the robot. Optionally, the robot also includes a wet vacuum that picks up the dispensed fluid after the scrubbing element has cleaned with the assistance of the dispensed fluid, and a waste fluid compartment that holds fluid picked up by the wet vacuum unit. The waste fluid compartment and dispensed fluid compartment may be integral compartments within a same fluid tank module that is readily removable as a module from the robot body.

According to another aspect of the invention, a surface treatment robot includes robot body having an outer perimeter formed substantially as a shape of constant width, driven forward by at least one rotating member, and a dispensed fluid compartment that holds fluid to be dispensed by the robot. A powered wet cleaning head employs at least one powered wet cleaning member to clean a cleaning width along a cleaning width line of the robot with the assistance of dispensed fluid. A waste material compartment holds waste fluid picked up by the robot. The wet cleaning head has a cleaning width with respect to total robot mass of the robot body, dispensed material compartment when empty, wet cleaning head, and waste material compartment when full of waste fluid picked up by the robot, of more than or equal to three centimeters of cleaning width per kilogram of total robot mass.

An example robot according to the invention has a cleaning width of about 30 cm, and a mass of about 3-5 kg. Such a robot has about 10 cm to about 6 cm of powered cleaning width per kilogram of fully loaded robot, a less efficient version, but still acceptable, could be 3 cm of powered cleaning width per kilogram of robot mass. This cleaning width permits sufficient work to be done per unit time, and the amount of weight is sufficient to provide enough traction for the cleaning width. Moreover, the robot does not become excessively large or inefficient by limiting the amount of weight. This combination provides the best balance of cleaning time versus maneuverability versus manageability.

Optionally, the powered wet cleaning head includes a powered circulating scrubber that scrubs the surface to be cleaned along a cleaning width line of the robot with the assistance of dispensed fluid. Further, the powered wet cleaning head may include a powered wet vacuum that picks up the waste fluid. Each of these contributes to the cleaning width, and may contribute either to drag or to motive force. The weight placed on the cleaning width may be limited to reduce or otherwise limit the amount of drag.

According to yet another aspect of the invention, a surface treatment robot includes a robot body having an outer perimeter formed substantially as a shape of constant width, driven forward by at least one rotating member, and a wet cleaning head that employs at least one circulating wet cleaning member to clean a cleaning width along a cleaning width line of the robot with the assistance of dispensed fluid. A tank that accommodates a fluid compartment stores fluid, and the robot body includes a mount that receives the tank. A fluid connection between the tank and the robot body and a vacuum connection between the tank and the robot body are provided. A coupling mechanically engages the tank to the robot body, the engagement of the coupling simultaneously sealing both the fluid connection and the vacuum connection.

With this construction, the robot may be prepared for use with one coupling, which completes form of the robot, the mechanical integrity of the robot, the vacuum connection (and seal) and fluid connection (and seal).

Optionally, the tank forms at least one quarter of the outer profile of the robot, wherein engagement of the coupling engagement of completes a substantially smooth outer profile of the robot. Alternatively, the tank forms at least one quarter of the outer peripheral surface of the robot including a part of the perimeter of the shape of constant width, and wherein engagement of the coupling engagement of substantially completes the perimeter of the shape of constant width. In either case, the robot is permitted to autonomously turn to escape confined spaces and corners by virtue of the outer profile, and space is efficiently maximized by avoiding the use of double and triple walls to house the tank within the robot body.

In one embodiment, a method for controlling a mobile robot may include spinning a brush in a first direction when the mobile robot moves forward; and deactivating the sweeping brush when the mobile robot moves in a reverse direction. In accordance with another embodiment, a method for controlling a mobile robot may include distributing fluid via a pump when the mobile robot operates in a cleaning mode; and deactivating the pump when the mobile robot is not moving forward. In accordance with yet another embodiment, a method for controlling a mobile robot may include traversing

a cleaning surface and distributing cleaning fluid on the cleaning surface during a cleaning cycle; and traversing the cleaning surface without distributing the cleaning fluid on the cleaning surface during a drying cycle. Also, the method may further include transitioning from the cleaning cycle to the drying cycle when a power supply voltage declines; or applying vacuum suction to the cleaning surface when the mobile robot operates in the drying mode. In accordance with another embodiment, a method for sensing fluid in a mobile robot having at least first and second electrodes may include swapping polarity between the first and second electrode; detecting a resistance between the first and second electrodes; and determining whether fluid is present based on the detected resistance between the first and second electrodes.

In another aspect, the invention relates to a liquid cleaner utilized with a robot cleaner, wherein the cleaner includes alkyl polyglucoside (for example, at 1-3% concentration) and tetrapotassium ethylenediamine-tetraacetate (tetrapotassium EDTA) (for example, at 0.5-1.5% concentration).

In another aspect, the invention relates to a tire material including a chloroprene homopolymer stabilized with thiuram disulfide black with a density of 14-16 pounds per cubic foot, or approximately 15 pounds per cubic foot foamed to a cell size of 0.1 mm plus or minus 0.02 mm. In certain embodiments, the tire has a post-foamed hardness of about 69 to 75 Shore 00. In other embodiments of the above aspects, the invention relates to tires, including, for example, those made of neoprene and chloroprene, and other closed cell rubber sponge materials. Tires made of polyvinyl chloride (PVC) and acrylonitrile-butadiene (ABS) (with or without other extractables, hydrocarbons, carbon black, and ash) may also be used.

BRIEF DESCRIPTION OF THE DRAWINGS

The features of the present invention will best be understood from a detailed description of the invention and a preferred embodiment thereof selected for the purposes of illustration and shown in the accompanying drawings in which:

FIG. **1** depicts an isometric view of a top surface of an autonomous cleaning robot according to the present invention.

FIG. **2** depicts an isometric view of a bottom surface of a chassis of an autonomous cleaning robot according to the present invention.

FIG. **3** depicts an exploded view of a robot chassis having robot subsystems attached thereto according to the present invention.

FIG. **4** depicts a schematic block diagram showing the interrelationship of subsystems of an autonomous cleaning robot according to the present invention.

FIG. **5** depicts a schematic representation of a liquid applicator assembly according to the present invention.

FIG. **6** depicts a schematic section view taken through a stop valve assembly installed within a cleaning fluid supply tank according to the present invention.

FIG. **7** depicts a schematic section view taken through a pump assembly according to the present invention.

FIG. **8** depicts a schematic top view of a flexible element used as a diaphragm pump according to the present invention.

FIG. **9** depicts a schematic top view of a nonflexible chamber element used in the pump assembly according to the present invention.

FIG. **10** depicts a schematic exploded isometric view of a scrubbing module according to the present invention.

FIG. **11** depicts an isometric rotatable scrubbing brush according to the present invention.

FIG. **12**A depicts a schematic section view taken through a second collecting apparatus used for collecting waste liquid according to the present invention.

FIG. **12**B depicts a schematic section view of an alternative collecting apparatus used for collecting waste liquid according to the present invention.

FIG. **13** is a schematic block diagram showing elements of a drive module used to rotate the scrubbing brush according to the present invention.

FIG. **14** is a schematic representation of an air moving system according to the present invention.

FIG. **15** depicts a schematic exploded isometric view of a fan assembly according to the present invention.

FIG. **16** depicts a schematic exploded isometric view showing elements of an integrated liquid storage module according to the present invention.

FIG. **17** depicts an external view of the integrated liquid storage module removed from the cleaning robot according to the present invention.

FIG. **18** depicts a schematic exploded view of a nose wheel module according to the present invention.

FIG. **19** depicts a schematic section view taken through a nose wheel assembly according to the present invention.

FIG. **20** depicts a schematic exploded view of a drive wheel assembly according to the present invention.

FIG. **21** depicts an exploded view of a robot chassis having robot subsystems attached thereto according to an embodiment of the present invention.

FIG. **22** depicts an exploded view of a robot chassis having robot subsystems attached thereto according to an embodiment of the present invention.

FIG. **23** depicts an exploded isometric view of a cleaning head or scrubbing module in accordance with one embodiment of the present invention.

FIG. **24** depicts an isometric view of a fan assembly in accordance with one embodiment of the present invention.

FIG. **25** depicts an exploded isometric view of a fan assembly in accordance with one embodiment of the present invention.

FIG. **26** depicts an exploded isometric view of a fan assembly in accordance with one embodiment of the present invention.

FIG. **27** depicts an exploded view of a robot chassis having an integrated tank according to an embodiment of the present invention.

FIG. **28** depicts a plan view of a sealing flap and airfoil within the plenum of the integrated tank depicted in FIG. **27**.

FIG. **29** depicts a side section view of the sealing flap and airfoil within the plenum of the integrated tank depicted in FIG. **28**.

FIG. **30** is an isometric view of the sealing flap, airfoil, and a foam/airflow wall in accordance with one embodiment of the present invention.

FIG. **31** is a side section view of a sealing flap and pendulum in accordance with one embodiment of the present invention.

FIG. **32** is an isometric view of a foam blocking wall within the integrated tank in accordance with one embodiment of the present invention

FIG. **33** depicts a schematic exploded view of a nose wheel module in accordance with one embodiment of the present invention.

FIG. **34** depicts a side view of the nose wheel module of FIG. **33**.

FIG. **35** depicts a front view of the nose wheel module of FIG. **33**.

FIG. **36** depicts a series of maintenance steps for maintaining and servicing a embodiment of the robot of the present invention.

FIGS. **37-41** depict a steps of robot maintenance as identified in FIG. **36**.

FIG. **42** depicts a side schematic view of a cleaning head and squeegee in accordance with another embodiment of the present invention.

FIG. **43** depicts a perspective view of the cleaning head and squeegee depicted in FIG. **42**.

FIG. **44** depicts another side schematic view of the cleaning head and squeegee depicted in FIG. **42**.

FIG. **45** depicts a third side schematic view of the cleaning head and squeegee depicted in FIG. **42**.

FIG. **46** depicts a cleaning path for a mobile robot in accordance with one embodiment of the present invention.

FIG. **47** depicts a mobile robot having left and right drive wheels positioned along a central diameter of the chassis, in accordance with one embodiment of the invention.

FIG. **48** depicts a mobile robot having left and right drive wheels positioned on the aft bottom portion of the chassis, in accordance with another embodiment of the invention.

FIG. **49** depicts an offset diameter robot positioned a distance d from a wall.

FIG. **50** depicts a control sequence for turning a robot with respect to a wall.

FIG. **51** depicts a first phase of a sequence for estimating a wall angle, in accordance with one embodiment of the invention.

FIG. **52** depicts a second phase of a sequence for estimating a wall angle, in accordance with one embodiment of the invention.

FIG. **53** depicts an obstacle avoidance sequence, in accordance with one embodiment of the invention, for backing a robot away from an obstacle.

FIG. **54** depicts a panic spin sequence for a mobile robot, in accordance with one embodiment of the invention.

FIG. **55** depicts a wheel drop response sequence for a mobile robot, in accordance with one embodiment of the invention.

FIG. **56** depicts one embodiment of a brush control sequence in accordance with a wet cleaning mobile robot.

FIG. **57** depicts a graph of current drawn by a robot motor versus time over at least one rotation cycle.

FIG. **58** depicts one embodiment of a sequence for pseudo-autocorrelation for a pump control process for a wet cleaning mobile robot.

FIG. **59** depicts one embodiment of a sequence for implementing a stuck behavior for a wet cleaning robot.

FIG. **60** depicts one embodiment of a fluid sensing circuit diagram for a wet cleaning mobile robot.

FIG. **61**A depicts one commercial embodiment of the robot of the present invention, including accessories.

FIG. **61**B depicts various views of one commercial embodiment of the robot of the present invention.

FIG. **62** depicts one embodiment of a control panel and user interface used with one embodiment of the robot.

FIG. **63** depicts another embodiment of a control panel and user interface used with one embodiment of the robot.

DETAILED DESCRIPTION OF THE EMBODIMENTS

Referring now to the drawings where like reference numerals identify corresponding or similar elements throughout the several views, FIG. **1** depicts an isometric view showing the external surfaces of an autonomous cleaning robot **100** according to a preferred embodiment of the present invention. The robot **100** is configured with a cylindrical volume having a generally circular cross-section **102** with a top surface and a bottom surface that is substantially parallel and opposed to the top surface. The circular cross-section **102** is defined by three mutually perpendicular axes; a central vertical axis **104**, a fore-aft axis **106**, and a transverse axis **108**. The robot **100** is movably supported with respect to a surface to be cleaned, hereinafter, the cleaning surface. The cleaning surface is substantially horizontal.

The robot **100** is generally supported in rolling contact with the cleaning surface by a plurality of wheels or other rolling elements attached to a chassis **200**. In a preferred embodiment, the fore-aft axis **108** defines a transport axis along which the robot is advanced over the cleaning surface. The robot is generally advanced in a forward or fore travel direction, designated F, during cleaning operations. The opposite travel direction, (i.e. opposed by 180°), is designated A for aft. The robot is generally not advanced in the aft direction during cleaning operations but may be advanced in the aft direction to avoid an object or maneuver out of a corner or the like. Cleaning operations may continue or be suspended during aft transport. The transverse axis **108** is further defined by the labels R for right and L for left, as viewed from the top view of FIG. **1**. In subsequent figures, the R and L direction remain consistent with the top view, but may be reversed on the printed page. In a preferred embodiment of the present invention, the diameter of the robot circular cross-section **102** is approximately 370 mm (14.57 inches) and the height of the robot **100** above the cleaning surface of approximately 85 mm (3.3 inches). However, the autonomous cleaning robot **100** of the present invention may be built with other cross-sectional diameter and height dimensions, as well as with other cross-sectional shapes, e.g. square, rectangular and triangular, and volumetric shapes, e.g. cube, bar, and pyramidal.

The robot **100** may include a user input control panel, not shown, disposed on an external surface, e.g. the top surface, with one or more user manipulated actuators disposed on the control panel. Actuation of a control panel actuator by a user generates an electrical signal, which is interpreted to initiate a command. The control panel may also include one or more mode status indicators such as visual or audio indicators perceptible by a user. In one example, a user may set the robot onto the cleaning surface and actuate a control panel actuator to start a cleaning operation. In another example, a user may actuate a control panel actuator to stop a cleaning operation.

FIG. **21** shows the four main modules substantially as they are normally arranged: a tank **800**, a top, a battery **201**, a robot body **200**, and a cleaning head **600** within the robot body **200**. The robot itself supports the battery **201** in a battery socket, and an integrated tank **800** is supported on top of both the robot and the battery **201**. The internal lower surface of the tank **800** and the internal upper surface of the robot body **200** are configured to substantially conform with the shape of the battery **201**. As discussed herein, the battery **201** may be replaced by levering the tank **800** on its pivot but not necessarily lifting or removing the tank **800**. Additionally, as shown in FIG. **21**, the cleaning head **600** may be inserted from the right side of the robot in a sliding motion without removing the tank **800** or battery **201**, and in this configuration may be removed from the robot body **200** for cleaning in the middle of a cleaning cycle or otherwise. FIG. **21** also shows the control panel **330** for the robot, which is detailed below.

As shown in FIG. **21**, the tank **800** has a handle as described herein in detail, which has a detent click lock, slightly lifts from the tank when lifted, and otherwise as described. When the tank **800** is mounted to the body **200**, this handle is for the

entire robot. When the tank **800** is detached from the robot, this handle is for the tank **800** alone. However, a second handle is formed in the robot body, as shown in FIG. **21**, an indentation underneath the control panel **330**. Accordingly, when the tanks **800** and the base unit **200** are separated, each has its own handle. When the tanks **800** and base unit **200** are reintegrated, the main handle serves for carrying both. The same handle is both a latch for tank removal when pushed in one direction and an interlock against removal when it is held in the other direction.

Exemplary Cleaning Systems

Referring now to FIG. **2**, the autonomous robot **100** includes a plurality of cleaning modules supported on a chassis **200** for cleaning the substantially horizontal cleaning surface as the robot is transported over the cleaning surface. The cleaning modules extend below the robot chassis **200** to contact or otherwise operate on the cleaning surface during cleaning operations. More specifically, the robot **100** is configured with a first cleaning zone A for collecting loose particulates from the cleaning surface and for storing the loose particulates in a receptacle carried by the robot. The robot **100** is further configured with a second cleaning zone B that at least applies a cleaning fluid onto the cleaning surface. The cleaning fluid may be clean water alone or clean water mixed with other ingredients to enhance cleaning. The application of the cleaning fluid serves to dissolve, emulsify or otherwise react with contaminants on the cleaning surface to separate contaminants therefrom. Contaminants may become suspended or otherwise combined with the cleaning fluid. After the cleaning fluid has been applied onto the surface, it mixes with contaminants and becomes waste material, e.g. a liquid waste material with contaminants suspended or otherwise contained therein.

The underside of the robot **100** is shown in FIG. **2** which depicts a first cleaning zone A disposed forward of the second cleaning zone B with respect to the fore-aft axis **106**. Accordingly, the first cleaning zone A precedes the second cleaning zone B over the cleaning surface when the robot **100** travels in the forward direction. The first and second cleaning zones are configured with a cleaning width W that is generally oriented parallel or nearly parallel with the transverse axis **108**. The cleaning width W defines the cleaning width or cleaning footprint of the robot. As the robot **100** advances over the cleaning surface in the forward direction, the cleaning width is the width of cleaning surface cleaned by the robot in a single pass. Ideally, the cleaning width extends across the full transverse width of the robot **100** to optimize cleaning efficiency; however, in a practical implementation, the cleaning width is slightly narrower that the robot transverse width due to spatial constraints on the robot chassis **200**.

According to the present invention, the robot **100** traverses the cleaning surface in a forward direction over a cleaning path with both cleaning zones operating simultaneously. In a preferred embodiment, the nominal forward velocity of the robot is approximately 4.75 inches per second however; the robot and cleaning devices may be configured to clean at faster and slower forward velocities. In order to cover a room in adequate time, the range of reasonable velocities is approximately 2 to 10 inches per second. The first cleaning zone A precedes the second cleaning zone B over the cleaning surface and collects loose particulates from the cleaning surface across the cleaning width W. The second cleaning zone B applies cleaning fluid onto the cleaning surface across the cleaning width W. The second cleaning zone may also be configured to smear the cleaning fluid applied onto the cleaning surface to smooth the cleaning fluid into a more uniform layer and to mix the cleaning fluid with contaminants on the cleaning surface. The second cleaning zone B may also be configured to scrub the cleaning surface across the cleaning width. The scrubbing action agitates the cleaning fluid to mix it with contaminants. The scrubbing action also applies a shearing force against contaminants to thereby dislodge contaminants from the cleaning surface. The second cleaning zone B may also be configured to collect waste liquid from cleaning surface across the cleaning width. According to the invention, a single pass of the robot over a cleaning path first collects loose particulates up from the cleaning surface across the cleaning width and thereafter applies a cleaning fluid onto the cleaning surface generally across the cleaning width W to interact with contaminants remaining on the cleaning surface and may further apply a scrubbing action to dislodge contaminants from the cleaning surface. A single pass of the robot **100** over a cleaning path may also smear the cleaning fluid more uniformly on the cleaning surface. A single pass of the robot over a cleaning path may also collect waste liquid up from the cleaning surface. The robot may, however, be designed to leave a certain amount of fluid behind on each pass or on some passes (e.g., to provide time for the cleaning liquid to work on dried material or stubborn stains).

In general, the cleaning robot **100** is configured to clean uncarpeted indoor hard floor surface, e.g. floors covered with tiles, wood, vinyl, linoleum, smooth stone or concrete and other manufactured floor covering layers that are not overly abrasive and that do not readily absorb liquid. Other embodiments, however, may be adapted to clean, process, treat, or otherwise traverse abrasive, liquid-absorbing, and other surfaces. In addition, in a preferred embodiment of the present invention, the robot **100** is configured to autonomously transport over the floors of small enclosed furnished rooms such as are typical of residential homes and smaller commercial establishments. The robot **100** is not required to operate over predefined cleaning paths but may move over substantially all of the cleaning surface area under the control of various transport algorithms designed to operate irrespective of the enclosure shape or obstacle distribution. In particular, the robot **100** of the present invention moves over cleaning paths in accordance with preprogrammed procedures implemented in hardware, software, firmware, or combinations thereof to implement a variety of modes, such as three basic operational modes, i.e., movement patterns, that can be categorized as: (1) a "spot-coverage" mode; (2) a "wall/obstacle following" mode; and (3) a "bounce" mode. In addition, the robot **100** is preprogrammed to initiate actions based upon signals received from sensors incorporated therein, where such actions include, but are not limited to, implementing one of the movement patterns above, an emergency stop of the robot **100**, or issuing an audible alert. These operational modes of the robot of the present invention are specifically described in U.S. Pat. No. 6,809,490, by Jones et al., entitled, Method and System for Multi-Mode Coverage for an Autonomous Robot, the entire disclosure of which is herein incorporated by reference it its entirety. However, the present disclosure also describes alternative operational modes.

In one embodiment, the robot **100** is configured to clean approximately 150 square feet of cleaning surface in a single cleaning operation. A larger or smaller tank may permit this to range from 100 square feet to 400 square feet. The duration of the cleaning operation is approximately 45 minutes in certain embodiments. The example of 45 minutes is with a single battery. In embodiments with smaller, larger, or 2 or more batteries on board, the cleaning time may range from about 20 minutes to up to about 2 hours. Accordingly, the robot systems are configured (physically, and as programmed) for unattended autonomous cleaning for 45 minutes or more

without the need to recharge a power supply, refill the supply of cleaning fluid or empty the waste materials collected by the robot. Although certain embodiments of the robot are designed for a small area rooms, there is no minimum square footage or cleaning time. A robot according to the invention could be configured with a tank of virtually any size.

As shown in FIGS. **2** and **3** the robot **100** includes a plurality of subsystems mounted to a robot chassis **200**. The major robot subsystems are shown schematically in FIG. **4** which depicts a master control module **300** interconnected for two-way communication with each of a plurality of other robot subsystems. The interconnection of the robot subsystems is provided via network of interconnected wires and or conductive elements, e.g. conductive paths formed on an integrated printed circuit board or the like, as is well known. The master control module **300** at least includes a programmable or preprogrammed digital data processor, e.g. a microprocessor, for performing program steps, algorithms and or mathematical and logical operations as may be required. The master control module **300** also includes a digital data memory in communication with the data processor for storing program steps and other digital data therein. The master control module **300** also includes one or more clock elements for generating timing signals as may be required.

A power module **310** delivers electrical power to all of the major robot subsystems. The power module includes a self-contained power source attached to the robot chassis **200**, e.g. a rechargeable battery, such as a nickel metal hydride battery, or the like. In addition, the power source is configured to be recharged by any one of various recharging elements and or recharging modes, or the battery may be replaced by a user when it becomes discharged or unusable. The master control module **300** may also interface with the power module **310** to control the distribution of power, to monitor power use and to initiate power conservation modes as required.

The robot **100** may also include one or more interface modules or elements **320**. Each interface module **320** is attached to the robot chassis to provide an interconnecting element or port for interconnecting with one or more external devices. Interconnecting elements and ports are preferably accessible on an external surface of the robot. The master control module **300** may also interface with the interface modules **320** to control the interaction of the robot **100** with an external device. In particular, one interface module element is provided for charging the rechargeable battery via an external power supply or power source such as a conventional AC or DC power outlet. Another interface module element may be configured for one or two way communications over a wireless network and further interface module elements may be configured to interface with one or more mechanical devices to exchange liquids and loose particulates therewith, e.g. for filling a cleaning fluid reservoir or for draining or emptying a waste material container.

Accordingly, the interface module **320** may comprise a plurality of interface ports and connecting elements for interfacing with active external elements for exchanging operating commands, digital data and other electrical signals therewith. The interface module **320** may further interface with one or more mechanical devices for exchanging liquid and or solid materials therewith. The interface module **320** may also interface with an external power supply for charging the robot power module **310**. Active external devices for interfacing with the robot **100** may include, but are not limited to, a floor standing docking station, a hand held remote control device, a local or remote computer, a modem, a portable memory device for exchanging code and or data with the robot and a network interface for interfacing the robot **100** with any device connected to the network. In addition, the interface module **320** may include passive elements such as hooks and or latching mechanisms for attaching the robot **100** to a wall for storage or for attaching the robot to a carrying case or the like.

In particular, an active external device according to one aspect of the present invention confines the robot **100** in a cleaning space such as a room by emitting radiation in a virtual wall pattern. The robot **100** is configured to detect the virtual wall pattern and is programmed to treat the virtual wall pattern as a room wall so that the robot does not pass through the virtual wall pattern. This particular aspect of the present invention is specifically described in U.S. Pat. No. 6,690,134 by Jones et al., entitled Method and System for Robot Localization and Confinement, the entire disclosure of which is herein incorporated by reference it its entirety.

Another active external device according to a further aspect of the present invention comprises a robot base station used to interface with the robot. The base station may comprise a fixed unit connected with a household power supply, e.g. and AC power wall outlet and or other household facilities such as a water supply pipe, a waste drain pipe and a network interface. According to invention, the robot **100** and the base station are each configured for autonomous docking and the base station may be further configured to charge the robot power module **310** and to service the robot in other ways. A base station and autonomous robot configured for autonomous docking and for recharging the robot power module is specifically described in U.S. patent application Ser. No. 10/762,219, by Cohen, et al., filed on Jan. 21, 2004, entitled Autonomous Robot Auto-Docking and Energy Management Systems and Methods, the entire disclosure of which is herein incorporated by reference it its entirety.

The autonomous robot **100** includes a self-contained motive transport drive subsystem **900** which is further detailed below. The transport drive **900** includes three wheels extending below the chassis **200** to provide three points of rolling support with respect to the cleaning surface. A nose wheel is attached to the robot chassis **200** at a forward edge thereof, coaxial with the fore-aft axis **106**, and a pair of drive wheels attached to the chassis **200** aft of the transverse axis **108** and rotatable about a drive axis that is parallel with the transverse axis **108**. Each drive wheel is separately driven and controlled to advance the robot in a desired direction. In addition, each drive wheel is configured to provide sufficient drive friction as the robot operates on a cleaning surface that is wet with cleaning fluid. The nose wheel is configured to self align with the direction of travel. The drive wheels may be controlled to move the robot **100** forward or aft in a straight line or along an arcuate path.

The robot **100** further includes a sensor module **340**. The sensor module **340** comprises a plurality of sensors attached to the chassis and or integrated with robot subsystems for sensing external conditions and for sensing internal conditions. In response to sensing various conditions, the sensor module **340** may generate electrical signals and communicate the electrical signals to the control module **300**. Individual sensors may perform such functions as detecting walls and other obstacles, detecting drop offs in the cleaning surface, called cliffs, detecting dirt on the floor, detecting low battery power, detecting an empty cleaning fluid container, detecting a full waste container, measuring or detecting drive wheel velocity distance traveled or slippage, detecting nose wheel rotation or cliff drop off, detecting cleaning system problems such rotating brush stalls or vacuum system clogs, detecting inefficient cleaning, cleaning surface type, system status, temperature, and many other conditions. In particular, several

aspects of the sensor module **340** of the present invention as well as and its operation, especially as it relates to sensing external elements and conditions are specifically described in U.S. Pat. No. 6,594,844, by Jones, entitled Robot Obstacle Detection System, and U.S. patent application Ser. No. 11/166,986, by Casey et al., filed on Jun. 24, 2005, entitled Obstacle Following Sensor Scheme for a Mobile Robot, the entire disclosures of which are herein incorporated by reference it their entireties.

One difference between the present robot and either the dry vacuum robot or the large industrial cleaner is the proximity of the control and sensor components to the wet cleaning components. In most dry vacuuming robots, none of the sensors or control elements are prone to being wet by water or by more damaging cleaning fluids or solvents, because no wet cleaners are used and no waste fluid is generated. With a large industrial cleaner, the controls and sensors can be placed as far as necessary from the cleaning elements, perhaps a few feet away, and the only sensors that need accommodate wetness are those for sensing fluid levels.

The present invention is contemplated for household use (commercial and industrial use is also contemplated, but these environments may require larger versions of the robot). Accordingly, a household robot should be small and squat, e.g., less than 4 inches from the ground, and around a foot in diameter. Much of the volume is occupied by fluid brushing, spinning, spraying, and blowing devices, and fluid and/or foam penetrates most parts of the robot at one time or another. At most, the control and sensor electronics will be a few inches from the nearest fluid or foam torrent.

Accordingly, the invention contemplates that the entire main control board will be fluid sealed, either in a water resistant or waterproof housing having at least JIS grade 3 (mild spray) water/fluid resistance, but grade 5 (strong spray) and grade 7 (temporary immersion) are also desirable. The main control board should be sealed in a JIS grade 3-7 housing (1) by a screwed-down and gasketed cover over the main housing; (2) by a welded, caulked, sealed, or glued cover secured to the main housing; (3) by being pre-assembled in a water resistant, water-tight, water-proof, or hermetically sealed compartment or module; or (4) by being positioned in a volume suitable for potting or pre-potted in resin or the like.

Many sensor elements have a local small circuit board, sometimes with a local microprocessor and/or A/D converter and the like, and these components are often sensitive to fluids and corrosion. The invention also contemplates that any sensor circuit boards distributed throughout the body of the robot will also be sealed in a JIS grade 3-7 housing in a similar manner. The invention also contemplates that multiple circuit boards, including at least the main circuit board and one remote circuit board several inches from the main board, may be sealed by a single matching housing or cover. For example, all or some of the circuit boards could be arranged in a single plastic or resin module having extensions which reach to local sensor sites, and a distributed cover could be secured over all of the circuit boards. In addition, exposed electrical connections and terminals of sensors, motors, or communication lines can be sealed in a similar manner, with covers, modules, potting, shrink fit, gaskets, or the like. In this manner, substantially the entire electrical system is fluid-sealed and/or isolated from spraying or foaming liquid. Any and all electrical or electronic elements defined herein as a circuit board, PCB, detector, sensor, etc., are candidates for such sealing.

The robot **100** may also include a user control module **330**. The user control module **330** provides one or more user input interfaces that generate an electrical signal in response to a user input and communicate the signal to the master control module **300**. In one embodiment of the present invention, the user control module, described above, provides a user input interface, however, a user may enter commands via a hand held remote control device, a programmable computer or other programmable device or via voice commands. A user may input user commands to initiate actions such as power on/off, start, stop or to change a cleaning mode, set a cleaning duration, program cleaning parameters such as start time and duration, and or many other user initiated commands. User input commands, functions, and components contemplated for use with the present invention are specifically described in U.S. patent application Ser. No. 11/166,891, by Dubrovsky et al., filed on Jun. 24, 2005, entitled Remote Control Scheduler and Method for Autonomous Robotic Device, the entire disclosure of which is herein incorporated by reference it its entirety. Specific modes of user interaction are also described herein.

Cleaning Zones

Referring now to FIG. **2**, a bottom surface of a robot chassis **200** is shown in isometric view. As shown therein, a first cleaning zone A is disposed forward of a second cleaning zone B with respect to the fore-aft axis **106**. Accordingly, as the robot **100** is transported in the forward direction the first cleaning zone A precedes the second cleaning zone B over the cleaning surface. Each cleaning zone A and B has a cleaning width W disposed generally parallel with the transverse axis **108**. Ideally, the cleaning width of each cleaning zone is substantially identical however, the actual cleaning width of the cleaning zones A and B may be slightly different. According to a preferred embodiment of the present invention, the cleaning width W is primarily defined by the second cleaning zone B which extends from proximate to the right circumferential edge of a bottom surface of the robot chassis **200** substantially parallel with the transverse axis **108** and is approximately 296 mm or 11.7 inches long, i.e., approximately 30 cm or 12 inches long. By locating the cleaning zone B proximate the right circumferential edge, the robot **100** may maneuver its right circumferential edge close to a wall or other obstacle for cleaning the cleaning surface adjacent to the wall or obstacle. Accordingly, the robot movement patterns include algorithms for transporting the right side of the robot **100** adjacent to each wall or obstacle encountered by the robot during a cleaning cycle. The robot **100** is therefore said to have a dominant right side. Of course, the robot **100** could be configured with a dominant left side instead. The first cleaning zone A is positioned forward of the transverse axis **108** and has a slightly narrower cleaning width than the second cleaning zone B, simply because of the circumference shape of the robot **100**. However, any cleaning surface area not cleaned by the first cleaning zone A is cleaned by the second cleaning zone B.

First Cleaning Zone or Dry Vacuum Cleaning

The first cleaning zone A is configured to collect loose particulates from the cleaning surface. In a preferred embodiment, an air jet is generated by an air moving system which includes an air jet port **554** disposed on a left edge of the first cleaning zone A. The air jet port **554** expels a continuous jet or stream of pressurized air therefrom. The air jet port **554** is oriented to direct the air jet across the cleaning width from left to right. Opposed to the air jet port **554**, an air intake port **556** is disposed on a right edge of the first cleaning zone A. "Air intake port" as used herein may mean "vacuum port," "air inlet," "negative pressure zone," etc. The air moving system generates a negative air pressure zone in the conduits connected to the intake port **556**, which creates a negative air pressure zone proximate to the intake port **556**. The negative air pressure zone suctions loose particulates and air into the

air intake port **556** and the air moving system is further configured to deposit the loose particulates into a waste material container carried by the robot **100**. Accordingly, pressurized air expelled from the air jet port **554** moves across the cleaning width within the first cleaning zone A and forces loose particulates on the cleaning surface toward a negative air pressure zone proximate to the air intake port **556**. The loose particulates are suctioned up from the cleaning surface through the air intake port **556** and deposited into a waste container carried by the robot **100**. The first cleaning zone A is further defined by a nearly rectangular channel formed between the air jet port **554** and the air intake port **556**. The channel is defined by opposing forward and aft walls of a rectangular recessed area **574**, which is a contoured shape formed in the bottom surface of the robot chassis **200**. The forward and aft walls are substantially transverse to the fore-aft axis **106**. The channel is further defined by a first compliant "doctor" (air flow guide) blade **576**, attached to the robot chassis **200**, e.g. along the aft edge of the recessed area **574**, and extending from the chassis bottom surface to the cleaning surface.

The doctor air flow guide blade is mounted to make contact or near contact with the cleaning surface. The doctor air flow guide blade **576** is preferably formed from a thin flexible and compliant molded material e.g. a 1-2 mm thick bar shaped element molded from neoprene rubber or the like. The doctor air flow guide blade **576**, or at least a portion of the doctor air flow guide blade, may be coated with a low friction material, e.g. a fluoropolymer resin for reducing friction between the doctor air flow guide blade and the cleaning surface. The doctor air flow guide blade **576** may be attached to the robot chassis **200** by an adhesive bond or by other suitable means. Air guide blade **576**, toward the rear of the robot, is angled with respect to the direction of travel, by about 95-120 degrees from the direction of travel. The end of the blade **576** nearest the vacuum port **556** is farther toward the rear. Accordingly, debris will tend to move along the angled blade **576** as the robot moves forward. As depicted in FIG. **2**, angled guide blade **578** points substantially toward the vacuum intake in such a manner that the vacuum intake also draws air and debris along the forward side of the smaller angled guide blade **578**. The small dry vacuum blade is positioned to divert lighter objects, that would otherwise been blown past the suction port, back towards the suction port to be injected. It also directs larger objects back towards this port.

The forward caster wheel, as shown in FIG. **2** near the front of the robot, is generally restricted to 180 degrees of side to side travel. Certain embodiments may, however, benefit from larger ranges of motion. For example, the criteria for certain embodiments of the forward caster is either 360 degrees (free movement), or less than 180 degrees (limited but reversible movement), but is typically 160-170 degrees for commercial embodiments. Certain ranges of motion of the caster wheel may cause the wheel to lock up when in reverse travel.

The channel of the first cleaning zone A provides an increased volume between the cleaning surface and the bottom surface of the robot chassis **200** local to the first cleaning zone A. The increased volume guides airflow between the jet port **554** and the air intake port **556**, and the doctor air flow guide blade **576** prevents loose particulates and airflow from escaping the first cleaning zone A in the aft direction. In addition to guiding the air jet and the loose particulates across the cleaning width, the first doctor air flow guide blade **576** may also exert a friction force against contaminants on the cleaning surface to help loosen contaminants from the cleaning surface as the robot moves in the forward direction. The first compliant doctor air flow guide blade **576** is configured to be sufficiently compliant to adapt its profile form conforming to discontinuities in the cleaning surface, such a door jams, moldings, and trim pieces, without hindering the forward travel of the robot **100**.

A second compliant doctor air flow guide blade **578** may also be disposed in the first cleaning zone A to further guide the air jet toward the negative pressure zone surrounding the air intake port **554**. The second compliant doctor air flow guide blade is similar in construction to the first compliant doctor air flow guide blade **576** and attaches to the bottom surface of the robot chassis **200** to further guide the air and loose particulates moving through the channel. In one example, a second recessed area **579** is formed in the bottom surface of the chassis **200** and the second compliant doctor air flow guide blade **576** protrudes into the first recessed area **574** at an acute angle typically between 30-60° with respect to the traverse axis **108**. The second compliant air flow guide blade extends from the forward edge of the recessed area **574** and protrudes into the channel approximately ⅓ to ½ of channel fore-aft dimension.

The first cleaning zone A traverses the cleaning surface along a cleaning path and collects loose particulates along the cleaning width. By collecting the loose particulates prior to the second cleaning zone B passing over the cleaning path, the loose particulates are collected before the second cleaning zone applies cleaning fluid onto the cleaning surface. One advantage of removing the loose particulates with the first cleaning zone is that the loose particulates are removed while they are still dry. Once the loose particulates absorb cleaning fluid applied by the second cleaning zone, they are more difficult to collect. Moreover, the cleaning fluid absorbed by the loose particulates is not available for cleaning the surface so the cleaning efficiency of the second cleaning zone B may be degraded. The first cleaning zone generally saves a user the task of sweeping before mopping, and is generally a pre-treatment. However, in an alternative configuration, the first cleaning zone is a dry vacuum that may operate separate and apart from the wet-cleaning functionality of the robot. Still further, in such a case, the first cleaning zone may be provided with a rotating brush or counter-rotating brushes, or may use brushes only rather than a brush and vacuum.

In another embodiment, the first cleaning zone may be configured with other cleaning elements such as counter-rotating brushes extending across the cleaning width to flick loose particulates into a receptacle. In another embodiment, an air moving system may be configured to draw air and loose particulates up from the cleaning surface through an elongated air intake port extending across the cleaning width. In particular, other embodiments usable to provide a first cleaning zone according to the present invention are disclosed in U.S. Pat. No. 6,883,201, by Jones et al. entitled Autonomous Floor-Cleaning Robot, the entire disclosure of which is herein incorporated by reference it its entirety.

FIG. **22** depicts elements similar to those depicted in FIG. **3**. Some alternative terminology is used in the following description. The elements shown in FIG. **22** are the main electrical board **300**, a "cam" driven pump **706**, the front caster **960**, a stasis circuit board **300***a* bearing IR "stasis" sensors and components (i.e., that detect when the front wheel does not rotate along with the driven wheels, indicating the robot may be stuck), a reed switch PCB **300***b*, a charging plug PCB **300***c* for receiving a battery charging cord, a battery contact blade **777** for contact to the battery as it is placed into the robot body, a board gasket/seal **301** that lines the edge of the board **300** and matches up with the cover to waterproof the board **300**, a bumper **220**, the main chassis **200**, the wet cleaning head motor and drivetrain **608** located substantially

in line with the wet cleaning head, a left drive train/wheel assembly **909** (showing biasing springs, suspension, integrated planetary or other gear train), a right drive train/wheel assembly **908** (similarly arranged), a bifurcated dry vacuum duct and exhaust duct **517***a*, **517***b*, a replaceable filter for the fan assembly (which should have small enough pores and a surface configured to prevent both particulates and most water from entering the fan assembly), a first or left spray nozzle **712**, a second or right spray nozzle **714**, a nozzle tube for the right spray nozzle, the fan assembly **502**, the inner cover of the robot main body, and wire clips for securing the inner cover to the chassis.

The stasis circuit board **300***a*, the reed switch PCB **300***b*, and the charging plug **300***c* are parts that may or should be rendered water resistant or water proof by the structures described herein. These PCBs, as shown in FIG. **22**, tend to be located to support the associated sensor and electronic parts.

The dry vacuum may be provided with a main cleaning brush to flick dirt into a small dirt bin. This bin could be mounted forward of the brush or aft (with appropriate modifications to the brush shroud). In addition to covering the floor with a thin sheet of water, which evaporates and increases the relative humidity, the ducting for the vacuum exhaust may be directed to constantly blow air across the water in the dirty or clean tank. The air leaving the dirty or clean tank will tend to have higher relative humidity than the air entering it, further increasing the humidity in the room, and if the cleaning fluid has added fragrance, this may be blown into the room.

Second Cleaning Zone or Wet Cleaning Head

The second cleaning zone B includes a liquid applicator **700** (also or alternatively, spray head and/or spreader) configured to apply a cleaning fluid onto the cleaning surface and the cleaning fluid is preferably applied uniformly across the entire cleaning width. The liquid applicator **700** is attached to the chassis **200** and includes at least one nozzle configured to spray the cleaning fluid onto the cleaning surface. The second cleaning zone B may also include a scrubbing module **600** (also or alternatively, a powered brush) for performing other cleaning tasks across the cleaning width after the cleaning fluid has been applied onto the cleaning surface. The scrubbing module **600** may include a smearing element disposed across the cleaning width for smearing the cleaning fluid to distribute it more uniformly on the cleaning surface. The second cleaning zone B may also include a passive or active scrubbing element, scrub brush, wiper, or wipe cloth configured to scrub the cleaning surface across the cleaning width. The second cleaning zone B may also include a second collecting apparatus (also or alternatively, wet vacuum, directed at either a wet surface or a wet brush) configured to collect waste materials up from the cleaning surface across the cleaning width, and the second collecting apparatus is especially configured for collecting liquid waste materials.

Liquid Applicator Module or Spray Head

The liquid applicator module **700**, shown schematically in FIG. **5**, is configured to apply a measured volume of cleaning fluid onto the cleaning surface across the cleaning width. "Liquid applicator module" as used herein, may mean "nozzle," "spray head," and/or "spreader brush/wiper." Additionally, the liquid applicator module may spray the floor directly, spray a fluid-bearing brush or roller, or apply fluid by dripping or capillary action to the floor, brush, roller, or pad. The liquid applicator module **700** receives a supply of cleaning fluid from a cleaning fluid supply container S, carried on the chassis **200**, and pumps the cleaning fluid through one or more spray nozzles disposed on the chassis **200**. The spray nozzles are attached to the robot chassis **200** aft of the first cleaning zone A and each nozzle is oriented to apply cleaning fluid onto the cleaning surface. In a preferred embodiment, a pair of spray nozzle are attached to the robot chassis **200** at distal left and right edges of the cleaning width W. Each nozzle is oriented to spray cleaning fluid toward the opposing end of the cleaning width. Each nozzles is separately pumped to eject a spray pattern and the pumping stroke of each nozzle occurs approximately 180 degrees out phase with respect to the other nozzle so that one of the two nozzles is always applying cleaning fluid.

Referring to FIG. **5**, the liquid applicator module **700** includes a cleaning fluid supply container S, which is carried by the chassis **200** (and/or a compartment within an integrated tank) and removable therefrom by a user to refill the container with cleaning fluid (alternatively, the container S is refilled with water, cleaning concentrate being supplied from another compartment or as a solid or powder). The supply container S is configured with a drain or exit aperture **702** formed through a base surface thereof. A fluid conduit **704** receives cleaning fluid from the exit aperture **702** and delivers a supply of cleaning fluid to a pump assembly **706**. The pump assembly **706** includes left and right pump portions **708** and **710**, driven by a rotating cam, shown in FIG. **7**. The left pump portion **708** pumps cleaning fluid to a left spray nozzle **712** via a conduit **716** and the right pump portion **710** pumps cleaning fluid to a right spray nozzle **714** via a conduit **718**.

A stop valve assembly, shown in section view in FIG. **6**, includes a female upper portion **720**, installed inside the supply container S, and a male portion **721** attached to the chassis **200**. The female portion **720** nominally closes and seals the exit aperture **702**. The male portion **721** opens the exit aperture **702** to provide access to the cleaning fluid inside the supply container S. The female portion **720** includes an upper housing **722**, a spring biased movable stop **724**, a compression spring **726** for biasing the stop **724** to a closed position, and a gasket **728** for sealing the exit aperture **702**. The upper housing **722** may also support a filter element **730** inside the supply container S for filtering contaminants from the cleaning fluid before the fluid exits the supply container S.

The stop valve assembly male portion **721** includes a hollow male fitting **732** formed to insert into the exit aperture **702** and penetrate the gasket **728**. Insertion of the hollow male fitting **732** into the exit aperture **702** forces the movable stop **724** upward against the compression spring **726** to open the stop valve. The hollow male fitting **732** is formed with a flow tube **734** along it central longitudinal axis and the flow tube **734** includes one or more openings **735** at its uppermost end for receiving cleaning fluid into the flow tube **734**. At its lower end, the flow tube **734** is in fluid communication with a hose fitting **736** attached to or integrally formed with the male fitting **732**. The hose fitting **736** comprises a tube element having a hollow fluid passage **737** passing therethrough, and attaches to hose or fluid conduit **704** that receives fluid from the hose fitting **736** and delivers the fluid to the pump assembly **706**. The flow tube **734** may also include a user removable filter element **739** installed therein for filtering the cleaning fluid as it exits the supply container S.

According to the invention, the stop valve male portion **721** is fixed to the chassis **200** and engages with the female portion **720**, which is fixed to the container S. When the container S is installed onto the chassis in its operating position the male portion **721** engages with the female portion **720** to open the exit aperture **702**. A supply of cleaning fluid flows from the supply container S to the pump assembly **706** and the flow may be assisted by gravity or suctioned by the pump assembly or both.

The hose fitting **736** is further equipped with a pair of electrically conductive elements, not shown, disposed on the

internal surface of the hose fitting fluid flow passage **737** and the pair of conductive elements inside the flow chamber are electrically isolated from each other. A measurement circuit, not shown, creates an electrical potential difference between the pair of electrically conductive elements and when cleaning fluid is present inside the flow passage **737** current flows from one electrode to the other through the cleaning fluid and the measurement circuit senses the current flow. When the container S is empty, the measurement circuit fails to sense the current flow and in response sends a supply container empty signal to the master controller **300**. In response to receiving the supply container empty signal, the master controller **300** takes an appropriate action.

The pump assembly **706** as depicted in FIG. **5** includes a left pump portion **708** and a right pump portion **710**. The pump assembly **706** receives a continuous flow of cleaning fluid from the supply container S and alternately delivers cleaning fluid to the left nozzle **712** and the right nozzle **714**. FIG. **7** depicts the pump assembly **706** in section view and the pump assembly **706** is shown mounted on the top surface of the chassis **200** in FIG. **3**. The pump assembly **706** includes cam element **738** mounted on a motor drive shaft for rotation about a rotation axis. The motor, not shown, is rotates the cam element **738** at a substantially constant angular velocity under the control of the master controller **300**. However, the angular velocity of the cam element **738** may be increased or decreased to vary the frequency of pumping of the left and right spay nozzles **712** and **714**. In particular, the angular velocity of the cam element **738** controls the mass flow rate of cleaning fluid applied onto the cleanings surface. According to one aspect of the present invention, the angular velocity of the cam element **738** may be adjusted in proportion to the robot forward velocity to apply a uniform volume of cleaning fluid onto the cleaning surface irrespective of robot velocity. Alternately, changes in the angular velocity in the cam element **738** may be used to increase or decrease the mass flow rate of cleaning fluid applied onto the cleanings surface as desired.

The pump assembly **706** includes a rocker element **761** mounted to pivot about a pivot axis **762**. The rocker element **761** includes a pair of opposed cam follower elements **764** on the left side and **766** on the right side. Each cam follower **764** and **766** remains in constant contact with a circumferential profile of the cam element **738** as the cam element rotates about its rotation axis. The rocker element **761** further includes a left pump actuator link **763** and a right pump actuator link **765**. Each pump actuator link **763** and **765** is fixedly attached to a corresponding left pump chamber actuator nipple **759** and a right pump chamber actuator nipple **758**. As will be readily understood, rotation of the cam element **738** forces each of the cam follower elements **764** and **766** to follow the cam circumferential profile and the motion dictated by the cam profile is transferred by the rocker element **761** to each of the left and right actuator nipples **759** and **758**. As described below, the motion of the actuator nipples is used to pump cleaning fluid. The cam profile is particularly shaped to cause the rocker element **761** to force the right actuator nipple **758** downward while simultaneously lifting up on the left actuator nipple **759**, and this action occurs during the first 180 degrees of cam. Alternately, the second 180 degrees of cam rotation causes the rocker element **761** to force the left actuator nipple **759** downward while simultaneously lifting up on the right actuator nipple **758**.

The rocker element **761** further includes a sensor arm **767** supporting a permanent magnet **769** attached at its end. A magnetic field generated by the magnet **769** interacts with an electrical circuit **771** supported proximate to the magnet **769** and the circuit generates signals responsive to changes in the orientation of magnetic field. the signals are used to track the operation of the pump assembly **706**.

Referring to FIGS. **7-9**, the pump assembly **706** further comprises a flexible membrane **744** mounted between opposing upper and lower nonflexible elements **746** and **748** respectively. Referring to the section view in FIG. **7** the flexible element **744** is captured between an upper nonflexible element **746** and a lower nonflexible element **748**. Each of the upper nonflexible element **746**, the flexible element **744** and the lower nonflexible element **748** is formed as a substantially rectangular sheet having a generally uniform thickness. However, each element also includes patterns of raised ridges depressed valleys and other surface contours formed on opposing surfaces thereof. FIG. **8** depicts a top view of the flexible element **744** and FIG. **9** depicts a top view of the lower nonflexible element **748**. The flexible element **744** is formed from a flexible membrane material such as neoprene rubber or the like and the nonflexible elements **748** and **746** are each formed from a stiff material nonflexible such as moldable hard plastic or the like.

As shown in FIGS. **8** and **9**, each of the flexible element **744** and the nonflexible element **748** are symmetrical about a center axis designated E in the figure. In particular, the left sides of each of the elements **746**, **744** and **748** combine to form a left pump portion and the rights side of each of the elements **746**, **744** and **748** combine to form a right pump portion. The left and right pump portions are substantially identical. When the three elements are assembled together, the raised ridges, depressed valleys and surface contours of each element cooperate with raised ridges depressed valleys and surface contours of the contacting surfaces of other of the elements to create fluid wells and passageways. The wells and passageways may be formed between the upper element **746** and the flexible element **744** or between the lower nonflexible element **748** and the flexible element **744**. In general, the flexible element **744** serves as a gasket layer for sealing the wells and passages and its flexibility is used to react to changes in pressure to seal and or open passages in response to local pressure changes as the pump operates. In addition, holes formed through the elements allow fluid to flow in and out of the pump assembly and to flow through the flexible element **744**.

Using the right pump portion by way of example, cleaning fluid is drawn into the pump assembly through an aperture **765** formed in the center of the lower nonflexible element **748**. The aperture **765** receives cleaning fluid from the fluid supply container via the conduit **704**. The incoming fluid fills a passageway **766**. Ridges **775** and **768** form a valley between them and a mating raised ridge on the flexible **744** fills the valley between the ridges **775** and **768**. This confines the fluid within the passageway **766** and pressure seal the passageway. An aperture **774** passes through the flexible element **744** and is in fluid communication with the passageway **766**. When the pump chamber, described below, expands, the expansion decreases the local pressure, which draws fluid into the passageway **776** through the aperture **774**.

Fluid drawn through the aperture **774** fills a well **772**. The well **772** is formed between the flexible element **744** and the upper nonflexible element **746**. A ridge **770** surrounds the well **772** and mates with a feature of the upper flexible element **746** to contain the fluid in the well **772** and to pressure seal the well. The surface of the well **772** is flexible such that when the pressure within the well **772** decreases, the base of the well is lifted to open the aperture **774** and draw fluid through the aperture **774**. However, when the pressure within the well **772** increases, due to contraction of the pump cham-

ber, the aperture **774** is forced against a raised stop surface **773** directly aligned with the aperture and the well **772** act as a trap valve. A second aperture **776** passes through the flexible element **744** to allow fluid to pass from the well **772** through the flexible element **744** and into a pump chamber. The pump chamber is formed between the flexible element **744** and the lower nonflexible element **748**.

Referring to FIG. **7**, a right pump chamber **752** is shown in section view. The chamber **752** includes a dome shaped flexure formed by an annular loop **756**. The dome shaped flexure is a surface contour of the flexible element **744**. The annular loop **756** passes through a large aperture **760** formed through the upper nonflexible element **746**. The volume of the pump chamber is expanded when the pump actuator **765** pulls up on the actuator nipple **758**. The volume expansion decreases pressure within the pump chamber and fluid is drawn into the chamber from the well **772**. The volume of the pump chamber is decreased when the pump actuator **765** pushes down on the actuator nipple **758**. The decrease in volume within the chamber increases pressure and the increased pressure expels fluid out of the pump chamber.

The pump chamber is further defined by a well **780** formed in the lower nonflexible element **748**. The well **780** is surrounded by a valley **784** formed in the lower nonflexible element **748**, shown in FIG. **9**, and a ridge **778** formed on the flexible element **744** mates with the valley **784** to pressure seal the pump chamber. The pump chamber **752** further includes an exit aperture **782** formed through the lower nonflexible element **748** and through which fluid is expelled. The exit aperture **782** delivers fluid to the right nozzle **714** via the conduit **718**. The exit aperture **782** is also opposed to a stop surface which acts as a check valve to close the exit aperture **782** when the pump chamber is decreased.

Thus according to the present invention, cleaning fluid is drawn from a cleaning supply container S by action of the pump assembly **706**. The pump assembly **706** comprises two separate pump chambers for pumping cleaning fluid to two separate spray nozzles. Each pump chamber is configured to deliver cleaning fluid to a single nozzle in response to a rapid increase in pressure inside the pump chamber. The pressure inside the pump chamber is dictated by the cam profile, which is formed to drive fluid to each nozzle in order to spray a substantially uniform layer of cleaning fluid onto the cleaning surface. In particular, the cam profile is configured to deliver a substantially uniform volume of cleaning fluid per unit length of cleaning width W. In generally, the liquid applicator of the present invention is configured to apply cleaning fluid at a volumetric rate ranging from about 0.2 to 5.0 ml per square foot, and preferably in the range of about 0.6-2.0 ml per square foot. However depending upon the application, the liquid applicator of the present invention may apply any desired volumetric layer onto the surface. In addition, the fluid applicator system of the present invention is usable to apply other liquids onto a floor surface such as wax, paint, disinfectant, chemical coatings, and the like.

As is further described below, a user may remove the supply container S from the robot chassis and fill the supply container with a measured volume of clean water and a corresponding measured volume of a cleaning agent. The water and cleaning agent may be poured into the supply container S through a supply container access aperture **168** which is capped by a removable cap **172**, shown in FIG. **17**. The supply container S is configured with a liquid volume capacity of approximately 1100 ml (37 fluid ounces) and the desired volumes of cleaning agent and clean water may be poured into the supply tank in a ratio appropriate for a particular cleaning application.

Scrubbing Module, Powered Brush and/or Powered Wiper

The scrubbing module **600**, according to a preferred embodiment of the present invention, is shown in exploded isometric view in FIG. **10** and in the robot bottom view shown in FIG. **2**. The scrubbing module **600** may be configured as a separate subassembly that attaches to the chassis **200** but is removable therefrom, by a user, for cleaning or otherwise servicing the cleaning elements thereof. Other arrangements can be configured without deviating from the present invention. For example, in an alternate configuration, the upper wall of the scrubbing module **600** would be essentially part of/integral with the robot main body, but the scrubbing module would open as shown to permit cleaning of brush, squeegee, and internal cavity (in such a case, "scrubbing module" remains appropriate terminology). A readily removable scrubbing module may be referred to as a "cartridge," e.g., scrubbing cartridge or cleaning head cartridge. The scrubbing module **600** installs and latches into place within a hollow cavity **602**, formed on the bottom side of the chassis **200**. A profile of the hollow cavity **602** is displayed on the right side of the chassis **200** in FIG. **3**. The cleaning elements of the scrubbing module **600** are positioned aft of the liquid applicator module **700** to perform cleaning operations on a wet cleaning surface.

In a preferred embodiment, the scrubbing module **600** includes a passive smearing or spreading element (also, and alternatively, "spreader" or "spreader brush") **612** attached to a forward edge thereof and disposed across the cleaning width. The smearing or spreader brush **612** extends downwardly from the scrubbing module **600** and is configured to make contact or near contact with the cleaning surface across the cleaning width. As the robot **100** is transported in the forward direction the smearing brush **612** moves over the pattern of cleaning fluid applied down by the liquid applicator and smears, or more uniformly spreads the cleaning fluid over the cleaning surface. The smearing or spreader brush **612**, shown in FIGS. **2** and **10**, comprises a plurality of soft compliant smearing bristles **614** with a first end of each bristle being captured in a holder such as crimped metal channel, or other suitable holding element. A second end of each smearing bristle **614** is free to bend as each bristle makes contact with the cleaning surface. The length and diameter of the smearing or spreader bristles **614**, as well as a nominal interference dimension that the smearing bristles makes with respect to the cleaning surface may be varied to adjust bristle stiffness and to thereby affect the smearing action. In a preferred embodiment of the present invention the smearing or spreader **612** comprises nylon bristles with an average bristle diameter in the range of about 0.05-0.2 mm (0.002-0.008 inches). The nominal length of each bristle **614** is approximately 16 mm (0.62 inches) between the holder and the cleaning surface and the bristles **614** are configured with an interference dimension of approximately 0.75 mm (0.03 inches). The smearing brush **612** may also wick up excess cleaning fluid applied to the cleaning surface and distribute the wicked up cleaning fluid to other locations. Of course, other smearing elements or spreader brushes such as flexible compliant blade member a sponge elements or a rolling member in contact with the cleaning surface are also usable. In the case where evenly spaced multiple spray jets or nozzles direct fluid (spraying, dripping, or flowing) in a regularly spaced pattern without a smearing brush, the evenly spaced multiple spray jets function as a "spreader."

The scrubbing module **600** may include a scrubbing element, scrub brush, wiper, or wipe cloth e.g. **604**; however, the present invention may be used without a scrubbing element. The scrubbing element contacts the cleaning surface during

cleaning operations and agitates the cleaning fluid to mix it with contaminants to emulsify, dissolve or otherwise chemically react with contaminants. The scrubbing element, scrub brush, wiper, or wipe cloth also generates a shearing force as it moves with respect to the cleaning surface and the force helps to break adhesion and other bonds between contaminants and the cleaning surface. In addition, the scrubbing element may be passive element or an active and may contact the cleaning surface directly, may not contact the cleaning surface at all or may be configured to be movable into and out of contact with the cleaning surface.

In one embodiment according to the present invention, a passive scrubbing element, scrub brush, wiper, or wipe cloth is attached to the scrubbing module **600** or other attaching point on the chassis **200** and disposed to contact the cleaning surface across the cleaning width. A force is generated between the passive scrubbing element and the cleaning surface as the robot is transported in the forward direction. The passive scrubbing element, scrub brush, wiper, or wipe cloth may comprise a plurality of scrubbing bristles held in contact with the cleaning surface, a woven or nonwoven material, e.g. a scrubbing pad or sheet material held in contact with the cleaning surface, or a compliant solid element such as a sponge or other compliant porous solid foam element held in contact with the cleaning surface. In particular, a conventional scrubbing brush, sponge, or scrubbing pad used for scrubbing may be fixedly attached to the robot **100** and held in contact with the cleaning surface across the cleaning width aft of the liquid applicator to scrub the cleaning surface as the robot **100** advances over the cleaning surface. In addition, the passive scrubbing element may be configured to be replaceable by a user or to be automatically replenished, e.g. using a supply roll and a take up roll for advancing clean scrubbing material into contact with the cleaning surface.

In another embodiment according to the present invention, one or more active scrubbing elements are movable with respect to the cleaning surface and with respect to the robot chassis. Movement of the active scrubbing elements increases the work done between scrubbing element, scrub brush, wiper, or wipe cloths and the cleaning surface. Each movable scrubbing element is driven for movement with respect to the chassis **200** by a drive module, also attached to the chassis **200**. Active scrubbing elements may also comprise a scrubbing pad or sheet material held in contact with the cleaning surface, or a compliant solid element such as a sponge or other compliant porous solid foam element held in contact with the cleaning surface and vibrated by a vibrating backing element. Other active scrubbing elements may also include a plurality of scrubbing bristles, and or any movably supported conventional scrubbing brush, sponge, or scrubbing pad used for scrubbing or an ultra sound emitter may also be used to generate scrubbing action. The relative motion between active scrubbing elements and the chassis may comprise linear and or rotary motion and the active scrubbing elements may be configured to be replaceable or cleanable by a user.

Referring now to FIGS. **10-12** a preferred embodiment of present invention includes an active scrubbing element. The active scrubbing element comprises a rotatable brush assembly **604** disposed across the cleaning width, aft of the liquid applicator nozzles **712**, **714**, for actively scrubbing the cleaning surface after the cleaning fluid has been applied thereon. The rotatable brush assembly **604** comprises a cylindrical bristle holder element **618** for supporting scrubbing bristles **616** extending radially outward there from. The rotatable brush assembly **604** is supported for rotation about a rotation axis that extends substantially parallel with the cleaning width. The scrubbing bristles **616** are long enough to interfere with the cleaning surface during rotation such that the scrubbing bristles **616** are bent by the contact with the cleaning surface.

Scrubbing bristles **616** are installed in the brush assembly in groups or clumps with each clump comprising a plurality of bristles held by a single attaching device or holder. Clumps locations are disposed along a longitudinal length of the bristle holder element **618** in a pattern. The pattern places at least one bristle clump in contact with cleaning surface across the cleaning width during each revolution of the rotatable brush element **604**. The rotation of the brush element **604** is clockwise as viewed from the right side such that relative motion between the scrubbing bristles **616** and the cleaning surface tends to flick loose contaminants and waste liquid in the aft direction. In addition, the friction force generated by clockwise rotation of the brush element **604** tends drive the robot in the forward direction thereby adding to the forward driving force of the robot transport drive system. The nominal dimension of each scrubbing bristles **616** extended from the cylindrical holder **618** causes the bristle to interfere with the cleaning surface and there for bend as it makes contact with the surface. The interference dimension is the length of bristle that is in excess of the length required to make contact with the cleaning surface. Each of these dimensions plus the nominal diameter of the scrubbing bristles **616** may be varied to affect bristle stiffness and therefore the resulting scrubbing action. Applicants have found that configuring the scrubbing brush element **604** with nylon bristles having a bend dimension of approximately 16-40 min (0.62-1.6 inches) a bristle diameter of approximately 0.15 mm (0.006 inches) and an interference dimension of approximately 0.75 mm (0.03 inches) provides good scrubbing performance. In another example, stripes of scrubbing material may be disposed along a longitudinal length of the bristle holder element **618** in a pattern attached thereto for rotation therewith. FIG. **23** depicts a second schematic exploded isometric view of a cleaning head or scrubbing module similar to that depicted in FIGS. **10** and **11**. In FIG. **23**, the arrangement of top cover **638**, static brush **614**, cartridge body **634**, squeegee **630**, and spreader brush **604** may be more clearly seen. The top cover **638** and cartridge body **634** are pivotally joined by the metal rod **640**; the double-helix brush **604** rests in the cartridge body **634**, yet is removable, and the squeegee **630** depicted in FIG. **23** is a one-piece squeegee with channels therethrough for the vacuum to draw fluid.

Squeegee and Wet Vacuum Detail

The scrubbing module **600** may also include a second collecting apparatus (also and alternatively, "wet vacuum") configured to collect waste liquid from the cleaning surface across the cleaning width. The second collecting apparatus is generally positioned aft of the liquid applicator nozzles **712**, **714**, aft of the smearing brush, and aft of the scrubbing element. Ina preferred embodiment according to the present invention, a scrubbing module **600** is shown in section view in FIG. **12**A. The smearing element **612** is shown attached to the scrubbing module at its forward edge and the rotatable scrubbing brush assembly **604** is shown mounted in the center of the scrubbing module. Aft of the scrubbing brush assembly **604**, a squeegee **630** contacts the cleaning surface across its entire cleaning width to collect waste liquid as the robot **100** advances in the forward direction. A vacuum system draws air in through ports in the squeegee to suction waste liquid up from the cleaning surface. The vacuum system deposits the waste liquid into a waste storage container carried on the robot chassis **200**. The robot may alternatively recirculate all or part of the fluid, i.e., a portion of the waste fluid may be

scavenged, or the waste fluid may be returned to a single, clean/waste tank, either filtered or unfiltered.

As detailed in the section view of FIG. **12**A, the squeegee **630** comprises a vertical element **1002** and a horizontal element **1004**. Each of the elements **1002** and **1004** are formed from a substantially flexible and compliant material such as neoprene or other sponge rubber, silicone or the like. A single piece squeegee construction is also usable. In a preferred embodiment, the vertical element **1002** comprises a more flexible durometer material and is more bendable and compliant than the horizontal element **1004**. The vertical squeegee element **1002** contacts the cleaning surface at a lower edge **1006** or along a forward facing surface of the vertical element **1002** when the vertical element is slightly bent toward the rear by interference with the cleaning surface. The lower edge **1006** or forward surface remains in contact with the cleaning surface during robot forward motion and collects waste liquid along the forward surface. The waste liquid pools up along the entire length of the forward surface and lower edge **1006**. The horizontal squeegee element **1004** includes spacer elements **1008** extending rear ward form its main body **1010** and the spacer elements **1008** defined a suction channel **1012** between the vertical squeegee element **1002** and the horizontal squeegee element **1004**. The spacer elements **1008** are discrete elements disposed along the entire cleaning width with open space between adjacent spacer elements **1008** providing a passage for waste liquid to be suctioned through.

A vacuum interface port **1014** is provided in the top wall of the scrubber module **600**. The vacuum port **1014** communicates with the robot air moving system and withdraws air through the vacuum port **1014**. The scrubber module **600** is configured with a sealed vacuum chamber **1016**, which extends from the vacuum port **1014** to the suction channel **1012** and extends along the entire cleaning width. Air drawn from the vacuum chamber **1016** reduces the air pressure at the outlet of the suction channel **1012** and the reduced air pressures draws in waste liquid and air from the cleaning surface. The waste liquid drawing in through the suction channel **1012** enters the chamber **1016** and is suctioned out of the chamber **1016** and eventually deposited into a waste material container by the robot air moving system. Each of the horizontal squeegee element **1010** and the vertical squeegee element **1002** form walls of the vacuum chamber **1016** and the squeegee interfaces with the surrounding scrubbing module elements are configured to pressure seal the chamber **1016**. In addition, the spacers **1008** are formed with sufficient stiffness to prevent the suction channel **1012** from closing.

The squeegee vertical element **1002** includes a flexure loop **1018** formed at its mid point. The flexure loop **1018** provides a pivot axis about which the lower end of the squeegee vertical element can pivot when the squeegee lower edge **1006** encounters a bump or other discontinuity in the cleaning surface. This also allows the edge **1006** to flex as the robot changes travel direction. When the squeegee lower edge **1006** is free of the bump or discontinuity it returns to its normal operating position. The waste liquid is further suctioned into the waste liquid storage container, compartment, or tank as described below with respect to FIG. **10**.

In an alternative shown in FIG. **12**B, the second collecting apparatus comprises a squeegee **630** interconnected with a vacuum system. The squeegee **630** collects waste liquid in a liquid collection volume **676** formed between a longitudinal edge of the squeegee and the cleaning surface as the robot **100** advances in the forward direction. The vacuum system interfaces with the liquid collection volume to suction the waste liquid up from the cleaning surface and deposit the waste liquid in a waste storage tank carried on the robot chassis **200**. The squeegee **630** is shown in FIG. **10** and in section view in FIG. **12**B.

As shown in FIG. **12**B, the squeegee **630** comprises a substantially flexible and compliant element molded from a neoprene rubber, silicone rubber, or the like, attached to the aft end of the scrubbing module **600** and disposed across the cleaning width. The squeegee extends downward from the chassis **200** to make contact or near contact with the cleaning surface. In particular, the squeegee **630** attaches to the aft edge of the scrubber module **600** at a scrubber module lower housing element **634** and extends downwardly to contact or nearly contact the cleaning surface. As shown in FIG. **12**B, the squeegee **630** includes a substantially horizontal lower section **652** that extends aft of and downwardly from the lower housing element **634** toward the cleaning surface. A forward edge of the squeegee horizontal lower section **652** includes a plurality of through holes **654**, uniformly disposed across the cleaning width. Each of the plurality of through holes **654** interfaces with a corresponding mounting finger **656** formed on the lower housing element **634**. The interlaced through holes **652** and mounting fingers **654** locate the forward edge of the squeegee **630** with respect to the lower housing **634** and an adhesive layer applied between the interlaced elements fluid seals the squeegee lower housing interface at the forward edge.

The squeegee **630** in FIG. **12**B is further configured with an aft section **658** that attaches to an aft edge of the lower housing element **634** along the cleaning width. A plurality of aft extending mounting fingers **660** are formed on the lower housing element **634** to receive corresponding through holes formed on the squeegee aft section **658**. The interlaced through holes **662** and aft mounting fingers **660** locate the squeegee aft section **658** with respect to the lower housing **634** and an adhesive layer applied between the interlaced elements fluid seals the squeegee lower housing interface at the aft edge. Of course, any attaching means can be employed.

As further shown in FIG. **12**B, a vacuum chamber **664** is formed by surfaces of the squeegee lower section **652**, the squeegee aft section **658** and surfaces of the lower housing element **634**. The vacuum chamber **664** extends longitudinally along the squeegee and lower housing interface across the cleaning width and is fluidly connected with a waste liquid storage tank carried by the chassis by one or more fluid conduits **666**, described below. In a preferred embodiment of FIG. **12**B, two fluid conduits **666** interface with the vacuum chamber **664** at distal ends thereof. Each of the fluid conduits **666** couple to the vacuum chamber **664** via an elastomeric sealing gasket **670**. The gasket **670** installs in an aperture of the lower housing **634** and is held therein by an adhesive bond, interference fit or other appropriate holding means. The gasket **670** includes an aperture passing therethrough and is sized to receive the fluid conduit **666** therein. The outside wall of the conduit **666** is tapered to provide a lead in to the gasket **670**. The conduit **666** is integral with the waste liquid storage container and makes a liquid gas tight seal with the gasket **670** when fully inserted therein.

The squeegee of FIG. **12**B includes a longitudinal ridge **672** formed at an interface between the horizontal lower section **652** and the aft section **658** across the cleaning width. The ridge **672** is supported in contact with, or nearly in contact with, the cleaning surface during normal operation. Forward of the ridge **672** the horizontal lower section **652** is contoured to provide the waste liquid collecting volume **674**. A plurality of suction ports **668** extend from the liquid collecting volume **674**, through the squeegee horizontal lower section **652** and into the vacuum chamber **664**. When negative air pressure is

generated within the vacuum chamber **664**, waste liquid is drawn up from the liquid collecting volume **674** into the vacuum chamber **664**. The waste liquid is further suctioned into the waste liquid storage container or tank as described below.

A third squeegee configuration is shown in FIGS. **42** through **45**. FIG. **42** depicts a side schematic view; FIG. **43** depicts a perspective view, FIG. **44** depicts another side schematic view, and FIG. **45** depicts a third side schematic view. This squeegee is a split squeegee, where a front crenellated panel provides separation to create vacuum channels, and a rear squeegee wiper maintains ground contact and collects fluid for the vacuum. These members are placed on different parts of the cleaning head, and match up when the cleaning head is closed.

As shown in FIG. **42**, the cartridge housing or shroud opens about a hinge point **613** (to the right, above the static brush **612**). The static brush **612** (e.g., the spreader brush) is mounted in the lower part of the shroud. The spinning brush **604** (e.g., the powered brush or wiper) is supported by the lower part of the shroud as well. The front squeegee **1004** is attached to the shroud bottom. As shown in FIG. **42**, the front squeegee **1004** is shown in a position that it would take if it did not contact the rear shroud, i.e., the front squeegee **1004** is either resilient or biased toward the rear squeegee **1006**, which is, in this case, a resilient elastomer. When the rear squeegee **1006**, which can be over-molded to the shroud top, is closed with the shroud top or cover, the two squeegees settle into the operating position (shown in section in FIG. **44**). The rear squeegee **1006**, which is resilient, is moved toward the rear, and the front squeegee **1004** is just slightly moved toward the front, sliding slightly along the rear squeegee **1006**. The settled position is slightly angled and provides the vacuum channels at just above the floor surface, with sufficient floor contact of the rear squeegee **1006**. As shown in FIG. **43**, the front squeegee **1004** is formed as a crenellated panel angled from the vertical and extending along the working width, the crenellated panel leading up to a flexure corner **1009** pointing upwards that also extends along the working width, which turns the corner, then curves downward and forward and leads into a horizontal panel for mounting. The crenellations or ribs **1008**, visible in FIG. **43**, maintain a correct flow path between the leading squeegee **1004** and the trailing squeegee **1006**. The flexure angle provides a good range of motion and flexibility, from both fore and aft for the two squeegees working together (as discussed herein, able to overcome obstacles the height of the robot ground clearance).

The rear squeegee **1006**, shown in section in FIG. **45**, is about 1 mm thick (with other dimensions as discussed herein) and includes a flat panel arranged vertically and extending along the working width, a compliant element as a reverse C-curve flexure loop **1018**, thinner than the flat panel and also extending along the working width, and a snap retention feature **1019** (shown retained in FIG. **44**). In the operating position, the rear squeegee **1006** bends generally between the snap retention element **1019** and the flat panel **1006**, with much of the bending taking place along the height of the C-curve flexure loop **1018**. Other structures, such as hinges or different materials, can be used as the compliant element and are considered to fall within this language. The rear squeegee **1006** can be formed, as shown in FIG. **42**, to extend all the way to the top and over within the vacuum chamber. If through-holes are formed or made in the top rear squeegee material, the entire rear squeegee can act as both a squeegee and as a seal for the wet vacuum ports at the top of the wet vacuum chamber **1016**, as the resilient rear squeegee material closely meets the vacuum ducting as the cleaning head cartridge is matched to the robot. In other circumstances, where the rear squeegee **1006** is formed from a different material than all or some of the upper portion of the rear squeegee **1006**, or where the rear squeegee **1006** does not extend all the way to the top or around the vacuum chamber, alternative seals may be provided.

FIG. **44** in general shows the operating position, wherein the rear squeegee **1006** angles back, and both flexure portions are positioned to permit flexure of the squeegee combination. Although the rear squeegee **1006** is formed as a flat panel wall (and alternatives as discussed herein) with a planar bottom, in the operating position as it is angled back by the front squeegee **1004**, and a working edge, the edge of the wall and wall bottom, contacts the ground rather than the planar bottom. The contact force, area, angle, flatness and edge profile of this contact is a large contributor to the drag of the cleaning elements, and as discussed herein, is to be maintained at a sufficiently low level of drag to permit traction while still enabling the squeegeeing of water on flat or irregular surfaces.

One squeegee as described is split fore/aft for easy disassembly and cleaning. This allows the user easily to remove the front and rear sections of the squeegee and associated vacuum chamber, allows for easy removal of any blockage or obstruction such as will from time to time be found in the vacuum path. It also allows the user to place the cleaning head in, for example, a dishwasher to more thoroughly clean and sanitize it. However, the squeegee may be alternatively split left/right as well. as the robot spins in place or turns, the squeegee can assume a configuration in which one side is bent backward and one side is bent forward. The point at which the bend switches from backward to forward can act as a more or less solid column under the robot, tending to high center it and interfere with mobility. By providing a split in the center of the squeegee, this tendency can be mitigated or eliminated, increasing mobility.

Referring to FIG. **10**, the scrubbing module **600** is formed as a separate subsystem that is removable from the robot chassis. The scrubbing module **600** includes support elements comprising a molded two-part housing formed by the lower housing element **634** and a mating upper housing element **636**. The lower and upper housing elements are formed to house the rotatable scrubbing brush assembly **604** therein and to support it for rotation with respect to the chassis. The lower and upper housing elements **634** and **636** are attached together at a forward edge thereof by a hinged attaching arrangement. Each housing element **634** and **636** includes a plurality of interlacing hinge elements **638** for receiving a hinge rod **640** therein to form the hinged connection. Of course, other hinging arrangements can be used. The lower and upper housing elements **634** and **636** form a longitudinal cavity for capturing the rotatable scrubbing brush assembly **604** therein and may be opened by a user when the scrubbing module **600** is removed from the robot **100**. The user may then remove the rotatable scrubbing brush assembly **604** from the housing to clean it replace it or to clear a jam.

The rotatable scrubbing brush assembly **604** comprises the cylindrical bristle holder **618**, which may be formed as a solid element such as a sold shaft formed of glass-filled ABS plastic or glass-filled nylon. Alternately the bristle holder **618** may comprise a molded shaft with a core support shaft **642** inserted through a longitudinal bore formed through the molded shaft. The core support shaft **642** may be installed by a press fit or other appropriate attaching means for fixedly attaching the bristle holder **618** and the core support shaft **642** together. The core support shaft **642** is provided to stiffen the brush assembly **604** and is therefore formed from a stiff

material such as a stainless steel rod with a diameter of approximately 10-15 mm (0.4-0.6 inches). The core support shaft **642** is formed with sufficient stiffness to prevent excessive bending of the cylindrical brush holder. In addition, the core support shaft **642** may be configured to resist corrosion and or abrasion during normal use.

As noted herein a powered brush is employed. The brush itself is easily removable from the cleaning head. This allows for the possibility for swapping in different brushes for special situations without replacing the entire cleaning head. The invention contemplates a set of brushes, each having differing physical structure (e.g., tight bristle spacing, loose, stiff bristle, wipers and bristles, etc.) for wood flooring, grout lines, uneven floors, etc. Different bristle compositions and configurations may be appropriate for different floor surfaces. Each tuft of bristles can be composed of a different number and type of bristles. The size of the tuft and the composition of the bristles impact its cleaning ability, energy consumption, and ability to handle different floor textures, and fluid management. Setting tufts at a lateral angle—allows cleaning beyond the edge of the brush core, and setting tufts at a tangential angle allows bristle tips to more aggressively strike the floor and reach deeper into cracks/grout lines.

The bristle holder **618** is configured with a plurality of bristle receiving holes **620** bored or otherwise formed perpendicular with the rotation axis of the scrubbing brush assembly **604**. Bristle receiving holes **620** are filled with clumps of scrubbing bristles **616** which are bonded or otherwise held therein. In one example embodiment, two spiral patterns of receiving holes **620** are populated with bristles **616**. A first spiral pattern has a first clump **622** and a second clump **624** and subsequent bristle clumps follow a spiral path pattern **626** around the holder outside diameter. A second spiral pattern **628** starts with a first clump **630** substantially diametrically opposed to the clump **622**. Each pattern of bristle clumps is offset along the bristle holder longitudinal axis to contact different points across the cleaning width. However, the patterns are arranged to scrub the entire cleaning width with each full rotation of the bristle holder **618**. In addition, the pattern is arranged to fully contact only a small number of bristle clumps with cleaning surface simultaneously, (e.g., two) in order to reduce the bending force exerted upon and the torque required to rotate the scrubbing brush assembly **604**. Of course, other scrubbing brush configurations having different bristle patterns, materials and insertion angles are usable. In particular, bristles at the right edge of the scrubbing element may be inserted at an angle and made longer to extend the cleaning action of the scrubbing brush further toward the right edge of the robot for cleaning near the edge of a wall.

The scrubbing brush assembly **604** couples with a scrubbing brush rotary drive module **606** which is shown schematically in FIG. **13**. The scrubbing brush rotary drive module **606** includes a DC brush rotary drive motor **608**, which is driven at a constant angular velocity by a motor driver **650**. The motor driver **650** is set to drive the motor **608** at a voltage and DC current level that provides the desired angular velocity of the rotary brush assembly **604**, which in one embodiment is about 1500 RPM; values as low as about 500 RPM, and as high as about 3000 RPM are contemplated. The drive motor **608** is coupled to a mechanical drive transmission **610** that increases the drive torque and transfers the rotary drive axis from the drive motor **608**, which is positioned on the top side of the chassis **200**, to the rotation axis of the scrubbing brush assembly **604**, which is positioned on a bottom side of the chassis **200**. A drive coupling **642** extends from the mechanical drive transmission **610** and mates with the rotatable scrubbing brush assembly **604** at its left end. The action of sliding the scrubber module **600** into the cavity **602** couples the left end of the rotatable brush assembly **604** with the drive coupling **642**. Coupling of the rotatable brush assembly **604** aligns its left end with a desired rotation axis, supports the left end for rotation, and delivers a rotary drive force to the left end. The right end of the brush assembly **604** includes a bushing or other rotational support element **643** for interfacing with bearing surfaces provided on the module housing elements **634**, **636**.

The scrubber module **600** further includes a molded right end element **644**, which encloses the right end of the module to prevent debris and spray from escaping the module. The right end element **644** is finished on its external surfaces to integrate with the style and form of adjacent external surfaces of the robot **100**. The lower housing element **634** is configured to provide attaching features for attaching the smearing brush **612** to its forward edge and for attaching the squeegee **630** to its aft edge. A pivotal latching element **646** is shown in FIG. **10** and is used to latch the scrubber module **600** in its operating position when it is correctly installed in the cavity **632**. The latch **646** attaches to attaching features provided on the top side of the chassis **200** and is biased into a closed position by a torsion spring **648**. A latching claw **649** passes through the chassis **200** and latches onto a hook element formed on the upper housing **636**. The structural elements of the wet cleaning module **600** may be molded from a suitable plastic material such as a polycarbonate, ABS, or other materials or combinations of materials. In particular, these include the lower housing **634**, the upper housing **636**, the right end element **644**, and the latch **646**.

Air Moving Subsystems or Vacuum & Blower Assembly

FIG. **14** depicts a schematic representation of a wet dry vacuum module **500** and its interface with the cleaning elements of the robot **100**. The wet dry vacuum module **500** interfaces with the first collecting apparatus to suction up loose particulates from the cleaning surface and with the second collecting apparatus to suction up waste liquid from the cleaning surface. The wet dry vacuum module **500** also interfaces with an integrated liquid storage container **800** attached to the chassis **200** and deposits loose particulates and waste liquid into one or more waste containers housed therein.

Referring to FIGS. **14** and **15**, the wet dry vacuum module **500** comprises a single fan assembly **502**; however, two or more fans can be used without deviating from the present invention. The fan assembly **502** includes a rotary fan motor **504**, having a fixed housing **506** and a rotating shaft **508** extending therefrom. The fixed motor housing **506** attaches to the fan assembly **502** at an external surface of a rear shroud **510** by threaded fasteners, or the like. The motor shaft **508** extends through the rear shroud **510** and a fan impeller **512** is attached to the motor shaft **508** by a press fit, or by another appropriate attaching means, for causing the impeller **512** to rotate with the motor shaft **508**. A front shroud **514** couples with the rear shroud **510** for housing the fan impeller **512** in a hollow cavity formed between the front and rear shrouds. The fan front shroud **514** includes a circular air intake port **516** formed integral therewith and positioned substantially coaxial with a rotation axis of the motor shaft **508** and impeller **512**. The front and rear shrouds **510**, **514** together form an air exit port **518** at a distal radial edge of the fan assembly **502**.

The fan impeller **512** generally comprises a plurality of blade elements arranged about a central rotation axis thereof and is configured to draw air axially inward along its rotation axis and expel the air radially outward when the impeller **718** is rotated. Rotation of the impeller **512** creates a negative air

pressure zone, or vacuum, on its input side and a positive air pressure zone at its output side. The fan motor **710** is configured to rotate the impeller **715** at a substantially constant rate of rotational velocity, e.g. 14,000 RPM, which generates a higher air flow rate than conventional fans for vacuum cleaners or wet vacuums. Rates as low as about 1,000 RPM and as high as about 25,000 RPM are contemplated, depending on configuration of the fan. A flywheel may be concentric with the fan impeller **715**, especially if the fan is located close to the center of gravity of the robot.

The air flow rate of the fan may range from about 60-100 CFM in free air and about 60 CFM in the robot, with approximately 60% of this flow rate is dedicated to the wet vac portion of the robot. This percentage is adjustable, either manually by the user or during manufacture. Adjustment of the airflow between the wet and dry vac systems would allow the user to configure the user to address particular needs of certain applications. Additionally, a multi-stage fan design could produce a similar air flow rate, but higher static pressure and velocity, which helps to maintain flow. Higher velocity also enables the device to entrain dry particles and lift and pull fluids. The multiple ribs and channels of the squeegee help to create areas of localized high velocity for entraining particles. In one embodiment, total cross sectional area is 180 square mm for each of the wet and dry vacuum (squeegee and suction port).

As shown in FIGS. **24** and **25**, one example of an impeller **512** is a two stage fan assembled from a base plate **512***a* having a hub or nose formed therein, and a vane assembly **512***b*, having an inducer **512***c* and exducer **512***d* formed therein. As shown in FIG. **24**, the inducer **512***c* includes forward curved inlet blades, which increase flow rate and efficiency over fan designs that do not use an inducer. The exducer blades are back swept and contribute to centrifugal flow. Also, as shown in FIG. **24**, specifically sized balancing pins **512***e* are positioned at regular degreed intervals about the rim of the vane assembly **512***b*. The pins are used to assist material removal for balancing as a fan assembly designed for sustained 14,000 RPM operation of a plastic fan. Both the base plate **512***b* and vane assembly **512***b* are formed from resin or plastic, and have various irregularities and density variations. After the base plate **512***b* and vane assembly **512***b* are assembled, a balancing machine is used to identify a number of pins at specific positions to remove in order to balance the impeller. As shown in FIGS. **15** and **26**, the impeller **512** is arranged within a scroll formed from the front and rear shrouds **512**, **514**. The scroll is for static pressure recovery and flow collection for use in the "blow" portion of the dry vacuum system. As shown in FIG. **26**, a front scroll **514** and a rear scroll **510** are assembled together to hold the impeller **512**, a seal **516** sealing the inducer end of the impeller **512**. The impeller **512** provides vacuum for the wet and dry vacuum sections, and a part of the output is split off to provide an air jet to the dry vacuum section. A bifurcator **515** splits a smaller portion of the output air flow off using a rear duct **517***b*, while most of the output air flow is exhausted via an exhaust duct and muffler. As shown in FIG. **26**, a circuit board **504***a* for the fan motor **504** is placed near the fan motor. This circuit board is one that may be rendered water resistant or waterproofed by the structures discussed herein.

With respect to the blower shown in FIGS. **24-26**, the scroll design folds back in on itself to allow a 30 percent larger impeller, without any loss in scroll volume while maintaining the same package size. The inducer is the portion of the fan blade dedicated to inlet flow only. Alternatively or in addition, a passive or active bypass system (e.g., a governor plus vane; or a motorized actuator plus a vane) may be provided to balance the blower outlet to suction port inlet flows for optimum performance over a variety of system conditions. A "moat" (i.e., a channel or wall) is alternatively or addition, in front of impeller to prevent water from entering impeller. The impeller used for air handling moves air through the system at considerable velocity, which can lead to water being pulled out of the dirty tank, through the impeller, and back to the floor. The moat is designed to prevent or limit this occurrence.

As shown in the FIGS., the main exhaust is in line with the cleaning head. In other words, while the cleaning head extends to the edge of the dominant side of the robot, a space of up to ⅕ of the robot is preserved beside the cleaning head on the robot diameter. As noted above, the gear train and/or motor for the cleaning head powered brush or wiper may be placed in this space. Additionally, the main exhaust may be placed in this space. Placing the main exhaust, which is quite strong (being most of the exhaust for the wet and dry vacuums, only a part used to blow debris in the dry vacuum) along the line of the cleaning head prevents applied, brushed, and/or wiped fluid from escaping the perimeter of the robot on the non-dominant side. Additionally, it is a feature of the cleaning head that the cartridge housing is internally dry (not connected to any fluid generating devices, and generally sealed against wetness), such that upon removal of the cleaning head cartridge, the user is presented with dry surfaces for handling the cleaning head. The exhaust also may be placed behind the cleaning head to assist in drying. In such a case, the exhaust could be spread by appropriate ducts and channels.

As shown schematically in FIG. **14**, a closed air duct or conduit **552** is connected between the fan housing exit port **518** and the air jet port **554** of the first cleaning zone A and delivers high pressure air to the air jet port **554**. At the opposite end of the first cleaning zone A, a closed air duct or conduit **558** connects the air intake port **556** with the integrated liquid storage container module **800** at a container intake aperture **557**. Integral with the integrated storage container or tank **800**, a conduit **832**, detailed below, connects the container intake aperture **557** with a plenum **562**. The plenum **562** comprises a union for receiving a plurality of air ducts connected thereto. The plenum **562** is disposed above a waste storage container portion of the integrated liquid storage container or tank module **800**. The plenum **562** and waste container portion are configured to deposit loose particulates suctioned up from the cleaning surface by the air intake port **556** into the waste container. The plenum **652** is in fluid communication with the fan intake port **516** via a closed air duct or conduit comprising a conduit **564**, not shown, connected between the fan assembly and a container air exit aperture **566**. The container air exit aperture **566** is fluidly connected with the plenum **562** by an air conduit **830** that is incorporated within the integrated liquid storage tank module **800**. Rotation of the fan impeller **512** generates a negative air pressure or vacuum inside the plenum **560**. The negative air pressure generated within the plenum **560** draws air and loose particulates in from the air intake port **556**.

As further shown schematically in FIG. **14**, a pair of closed air ducts or conduits **666** interface with scrubbing module **600** of the second cleaning zone B. The air conduits **666**, shown in section view in FIG. **10** comprise external tubes extending downwardly from the integrated liquid container module **800**. The external tubes **666** insert into the scrubber module upper housing gaskets **670**.

As shown in FIG. **14**, conduits **834** and **836** fluidly connect each external tube **666** to the plenum **652**. Negative air pressure generated within the plenum **652** draws air from the vacuum chamber **664** via the conduits **834**, **836** and **666** to suction waste liquid from the cleaning surface via the suction

ports **668** passing from the vacuum chamber **664** to the waste liquid collecting volume **674**. The waste liquid is draw into the plenum **562** and deposited into the waste liquid storage container.

Of course other wet dry vacuum configurations are contemplated without deviating from the present invention. In one example, a first fan assembly may be configured to collect loose particulates from the first cleaning zone and deposit the loose particulates in the first waste storage container or tank and a second fan assembly may be configured to collect waste liquid from the second cleaning zone and deposit the waste liquid into a second waste storage container or tank. Integrated Liquid Storage Tank

Elements of the integrated liquid storage container module **800** are shown in FIGS. **1**, **12**, **14**, **16** and **17**. Referring to FIG. **16**, the integrated liquid storage container **800** is formed with at least two liquid storage container or tank portions. One container portion comprises a waste container portion and the second container portion comprises a cleaning fluid storage container or tank portion. In another embodiment of the present invention the two storage containers are formed as an integral unit that is configured to attach to the chassis **200** and to be removable from the chassis by a user to empty the waste container portion and to fill the cleaning fluid container portion. In an alternate embodiment, the integrated storage containers can be filled and emptied autonomously when the robot **100** is docked with a bas station configured for transferring cleaning fluid and waste material to and from the robot **100**. The cleaning fluid container portion S comprises a sealed supply tank for holding a supply of the cleaning fluid. The waste container portion W comprises a sealed waste tank for storing loose particulates collected by the first collecting apparatus and for storing waste liquid collected by the second collecting apparatus.

The waste tank D (or compartment D) comprises a first molded plastic element formed with a base surface **804** and an integrally formed perimeter wall **806** disposed generally orthogonal from the base surface **804**. The base surface **804** is formed with various contours to conform to the space available on the chassis **200** and to provide a detent area **164** that is used to orient the integrated liquid storage container or tank module **800** on the chassis **200**. The detent **164** includes a pair of channels **808** that interface with corresponding alignment rails **208** formed on a hinge element **202**, attached to the chassis **200** and described below. The perimeter wall **806** includes finished external surfaces **810** that are colored and formed in accordance with the style and form of other external robot surfaces. The waste tank D may also include a tank level sensor housed therein and be configured to communicate a tank level signal to the master controller **300** when the waste tank D (or compartment D) is full. The level sensor may comprise a pair of conductive electrodes disposed inside the tank and separated from each other. A measurement circuit applies an electrical potential difference between the electrodes from outside the tank. When the tank is empty no current flow between the electrodes. However, when both electrodes are submerged in waste liquid, current flows through the waste liquid from one electrode to the other. Accordingly, the electrodes may be located at positions with the tank for sensing the level of fluid within the tank.

The cleaning fluid storage container or tank S is formed in part by a second molded plastic element **812**. The second molded element **812** is generally circular in cross-section and formed with a substantially uniform thickness between opposing top and bottom surfaces. The element **812** mates with the waste container perimeter wall **810** and is bonded or otherwise attached thereto to seal the waste container, compartment, or tank D. The plenum **562** is incorporated into the second molded element **812** and positioned vertically above the waste container, tank D (or compartment D) when the cleaning robot is operating. The plenum **562** may also comprise a separate molded element.

The second molded element **812** is contoured to provide a second container portion for holding a supply of cleaning fluid. The second container portion is formed in part by a downwardly sloping forward section having an integrally formed first perimeter wall **816** disposed in a generally vertically upward direction. The first perimeter wall **816** forms a first portion of an enclosing perimeter wall of the liquid storage container S. The molded element **812** is further contoured to conform to the space available on the chassis **200**. The molded element **812** also includes the container air input aperture **840**, for interfacing with first cleaning zone air conduit **558**. The molded element **812** also includes the container air exit aperture **838**, for interfacing with the fan assembly **502** via the conduit **564**.

A molded cover assembly **818** attaches to the molded element **812**. The cover assembly **818** includes a second portion of the supply tank perimeter wall formed thereon and provides a top wall **824** of the supply tank enclosure. The cover assembly **818** attaches to the first perimeter wall portion **816** and to other surfaces of the molded element **814** and is bonded or otherwise attached thereto to seal the supply container S. The supply container S may include a tank empty sensor housed therein and be configured to communicate a tank empty signal to the master controller **300** when the upper tank is empty.

The cover assembly **818** comprises a molded plastic cover element having finished external surfaces **820**, **822** and **824**. The finished external surfaces are finished in accordance with the style and form of other external robot surfaces and may therefore be colored and or styled appropriately. The cover assembly **818** includes user access ports **166**, **168** to the waste container tank D to the supply container S, respectively. The cover assembly **818** also includes the handle **162** and a handle pivot element **163** attached thereto and operable to unlatch the integrated liquid storage tank **800** from the chassis **200** or to pick up the entire robot **100**.

According to the invention, the plenum **562** and each of the air conduits **830**, **832**, **834** and **836** are inside the cleaning fluid supply container S and the interconnections of each of these elements are liquid and gas sealed to prevent cleaning fluid and waste materials from being mixed together. The plenum **562** is formed vertically above the waste container, compartment, or tank D so that waste liquid waste and loose particulates suctioned into the plenum **562** will drop into the waste tank D (or compartment D) under the force of gravity. The plenum side surfaces **828** include four apertures formed therethrough for interconnecting the plenum **562** with the four closed air conduits interfaced therewith. Each of the four closed air conduits **830**, **832**, **834** and **836** may comprise a molded plastic tube element formed with ends configured to interface with an appropriate mating aperture.

As shown in FIG. **16**, the container air exit aperture **838** is generally rectangular and the conduit **830** connecting the container air exit aperture **838** and the plenum **562** is shaped with a generally rectangular end. This configuration provides a large area exit aperture **838** for receiving an air filter associated therewith. The air filter is attached to the fan intake conduit **564** to filter air drawn in by the fan assembly **502**. When the integrated storage tank **800** is removed from the robot, the air filter remains attached to the air conduit **564** and may be cleaned in place or removed for cleaning or replacement as required. The area of the air filter and the container

exit aperture **838** are formed large enough to allow the wet dry vacuum system to operate even when up to about 50% or more of the air flow through the filter is blocked by debris trapped therein.

FIG. **27** depicts a second schematic exploded isometric view showing elements of an integrated tank similar to that of FIG. **16**. FIG. **27** depicts many of the same or similar elements as FIG. **3**. Some alternative terminology is used in the following description. The elements shown in FIG. **27** are the handle, a manifold including plenum **830** and tubes **832**, **834**, **836** (in this embodiment, the plenum and air flow conduits are all integral; in other embodiments, the air flow conduits would be replaced with rubber guide tubes), a pump filter, and a magnet reed. FIG. **27** shows a D-shaped flexible rubber tank cap for the clean tank, a similar one for the waste tank (these rubber tank caps include an inner circular seal that conforms to the shape of the tubes leading to the compartments, and a D-shaped outer part that has a matching receiver in the tank lid, as depicted in FIG. **27**). When the tank is loaded in the clevis-like holder or pivot clamp, the holder can assist in holding shut both of the D-shaped flexible rubber tank caps. The figure also depicts the tank bottom (which forms the dirty compartment), the tank middle, and the tank top (which forms the clean compartment). As show, the plenum and/or conduits for the dry and/or wet vacuums extend through the clean tank. This would not generally be found in a larger device, as a larger device would have space to arrange vacuum and/or other air flow conduits outside clean or dirty water tanks. Alternatively, only some of the conduits for the vacuum could extend through the clean tank (e.g., the wet only, the dry only, one wet and one dry), or some or all of the conduits could extend through the dirty tank. Alternatively, one or more conduits could extend through both tanks. Still further alternatively, the conduits could be formed in another layer, i.e., be sandwiched between two tank middle plates. FIG. **27** also depicts an O-ring for sealing the tank top to a tube passing from the tank top through the tank middle to the dirty compartment.

FIGS. **28-30** show a sealing flap **598**, airfoil, foam/airflow wall, and ball **594** within the integrated tank **592**. FIG. **31** is an isometric view of a foam blocking wall within the integrated tank **592**.

As shown in FIG. **27**, an aperture **562***a* at the bottom of the plenum (in this embodiment, "bottom" refers to the operating orientation) permits particulates and waste water to drop into the waste tank D. As shown in FIG. **16**A, this aperture is relatively large. When the tank or robot is lifted and leaves the operating orientation, collected waste must be retained in the waste tank D to prevent it from entering the fan or escaping the waste tank to wet the user or floor. As shown in FIGS. **28-30**, a hinged flap **598** is provided to seal the aperture **562***a*.

The hinged flap **598** is hinged at one side of the aperture **562***a*, and opens down. That is, when the robot operates, the flap **598** is to be kept open, to permit waste to enter the waste tank D. However, air flow passing over the flap **598** toward the vacuum side of the fan assembly **502** creates a low pressure region above the flap **598** (Venturi/Bernoulli Effect), which can tend to pull up and close the flap in some operating conditions. An airfoil **596** attached to the flap **598** within the plenum **562** is introduced into this air flow, and the down-force effect of the airfoil **596** dominates the Bernoulli Effect, keeping the flap **598** open whenever significant air flow is present. The airfoil **596** is shaped as a generally horizontal (and, in certain embodiments, upswept) wing **596***a* mounted atop a vertical fin **596***b*, resembling a T assembly airplane tail. The airfoil **596** is swept in a direction to create down-force or flap-opening force during robot operation.

As shown in FIGS. **28-30**, the hinged flap **598**, however, is allowed to open no farther than a ball **594**. The ball **594** is provided below the flap **598** to close the flap **598** when the tank or robot are moved from the operating orientation to a non-horizontal, vertical or partially vertical orientation (e.g., when the tank alone or robot is being carried). Alternatively, the ball **594** may prevent the flap **598** from moving more than a predetermined distance away from the aperture. Regardless of the degree of movement of the flap **598**, the arrangement of the ball **594** and flap **598** provides for opening and closing the flap **598** at appropriate times. A downwardly open upper cone **598***a* is formed in the bottom of the hinged flap, and an upwardly open lower cone **592** is formed in the waste tank D. The walls of each cone are less than 45 degrees from horizontal, the walls of the lower cone **592** being shallower than those of the upper cone **598***a* and less than about 30 degrees from horizontal. In a normal operating orientation, the ball **594** rests in the lower cone **592**, and waste drops through the aperture **562***a* and around the ball **594**. When the tank or robot are moved into any orientation other than horizontal, the ball **594** escapes the shallow lower cone **592** and travels along the converging walls of the upper and lower cone, pushing on and closing the flap **598**. A matching lip seal **562***b*-**598***a* around the aperture **562***a* and flap **598** prevents waste from escaping the waste tank D when the flap **598** is closed by the ball **594**.

The vertical fin **596***b*, however, serves a purpose other than merely supporting the airfoil(s) **596***a*. The vertical fin **596***b* forms a vertical wall that extends substantially across the length of the flap **598**. This wall begins at or near the entry of the wet vacuum conduit **832** and dry vacuum conduits **834**, **836** into the plenum **562**, and separates the dry vacuum air stream(s) from the wet vacuum air stream across the length of the flap **598** as noted, as well as substantially across the length of the plenum **562**. Accordingly, particulates will generally tend to remain dry while they drop into the waste tank D. The dry side air flow moves at higher speed than the wet side air flow entering the plenum. Keeping foam on the low speed side helps the foam move into the tank.

As shown in FIGS. **28-30**, the flap-ball-airfoil arrangement uses gravity and existing air flow to open and close the flap/aperture depending on circumstances, and generally avoids issues of corrosion or collection of sludge, which could adversely affect more complex actuation. The combination constitutes an aperture-closing member (the flap); a member that helps open the flap during operation (the airfoil); and a member that helps close the flap when the robot is moved to a non-operating position (the ball). It may not be necessary to close the flap when the robot is not operating but remains horizontal, as gravity prevents the escape of waste fluid, and there exists some advantage to keeping the flap open to permit fluid in the plenum to drip into the waste tank after air flow stops. In cases where the flap should be closed during non-operation, however, other mechanical means (including airfoils, springs, balls, or weights) could close the flap as soon as air flow stops, e.g., a member that tends to close the flap except during operation could also or alternatively be included. Unpowered, non-electrical actuation of such a mechanism would require no independent power supply, and it is noted that the flap-ball-airfoil combination is simple, robust, and durable. Regardless, electrical and/or fluid-powered actuators still may be used in lieu of or in addition to mechanical devices such as airfoils, balls, springs (including elastomers), and weights.

As shown in FIG. **31**, one particular alternative technique for maintaining the flap appropriately open or closed would employ a pendulum or plumb weight arranged to pull open, or permit to open, the flap during operation and to swing to close

the flap when the tank or robot is moved to a non-horizontal orientation. The pendulum or plumb weight could either hang freely from a position near the flap bottom, or could be attached to a relatively rigid multi-way arm or "hat" angled from the pendulum "shaft," the pendulum pivoting substantially about the angle, preferably about a multi-way ball, shoulder, or loosely coupled axis that permits the arms to tilt relative to the flap. One support that provides an appropriate axis is a conic shape with a small hole at the point of the cone, the cone opening down, and the shaft of the pendulum being relatively loose in the hole at the point of the cone. If the hat or arms are above the hole, and the weight movable within the cone, the assembly will keep the arms horizontal until the robot or tank is moved away from the horizontal, in which case the pendulum shaft tilts inside the hole and cone, at least one part of the hat or arms then pushing the flap closed. The flap can include a seat for the hat or arms that is internally curved along the hat to permit clearance and free movement as appropriate. The pendulum weight pivots the arms or hat so that the arms or hat are substantially horizontal when the robot or tank is horizontal (pulling open or permitting the relatively compliant flap to open when the robot or tank is horizontal) and at least one arm or part of the hat pushes the flap against the seal when the robot or tank is not horizontal (pushing the relatively compliant flap closed in the vertical or non-horizontal orientation). The pendulum weight should move freely, and can be positioned as far as possible from the flap (proximate the far walls of the tank) to provide a longer moment arm.

FIG. **32** is an isometric view of a foam blocking wall **580** within the integrated tank D. As noted herein, a waste fluid (WTF) sensor is used at the top of the waste fluid tank. The waste fluid sensor is conductive, and when waste fluid reaches the top of the tank, a current may pass between two wire probes at the top of the compartment, indicating via a visible or audible signal emitted from the robot that the waste compartment is full. During cleaning, however, depending on the cleaning fluid and what has been cleaned, foam may build up in the waste fluid compartment and, as foam can conduct a current, give a false positive reading on the waste fluid full sensor. The foam tends to be generated before, or during entry of waste fluid into the aperture or entrance port to the waste compartment. As shown in FIG. **32**, a wall is provided between an isolated section **579** of the waste fluid compartment (in which one or both of the probes are located) and the remainder of the tank D. The wall **580** includes a gap or fluid entrance port **578** at the bottom of the tank D, but otherwise is a complete wall isolating the probe chamber **579**, with sufficient air flow allowed to enable water to easily enter the chamber, and subsequently rise therein. Foam can exist in the main chamber D, but does not transfer to the isolated probe chamber **579**, which remains generally foam free. Accordingly, the sensor does not generally register the presence of foam in this configuration.

Returning to FIGS. **16** and **28**, each of the container apertures **840** and **838** are configured with a gasket, not shown, positioned external to the container aperture. The gaskets provide substantially airtight seals between the container assembly **800** and the conduits **564** and **558**. In one embodiment, the gaskets remain affixed to the chassis **200** when the integrated liquid supply container **800** is removed from the chassis **200**. The seal is formed when the container assembly **800** is latched in place on the robot chassis. In addition, some of the container apertures may include a flap seal or the like for preventing liquid from exiting the container while it is carried by a user. The flap seal remains attached to the container.

FIG. **28** shows that the air conduits are connected to the plenum with flexible (e.g., elastomer) tubes. These tubes help account for the stack-up of manufacturing tolerances. Alternatively, as discussed herein, the entire set of plenum and conduits may be formed as an, e.g., blow-molded or other unit; or the plenum and conduits may be matching top and bottom injection or other molded units.

Thus according to the present invention, the fan assembly **502** generates a negative pressure of vacuum which evacuates air conduit **564**, draws air through the air filter disposed at the end of air conduit **564**, evacuates the fan intake conduit **830** and the plenum **562**. The vacuum generated in the plenum **562** draws air from each of the conduits connected thereto to suction up loose particulates proximate to the air intake port **556** and to draw waste liquid up from the cleaning surface via the air conduits **834**, **836** and **666**, and via the vacuum chamber **664** and the suction ports **668**. The loose particulates and waste liquid are drawn into the plenum **562** and fall into the waste container, compartment, or tank D.

Referring to FIGS. **1**, **3**, **16** and **17** the integrated liquid storage container or tank **800** attaches to a top side of the robot chassis **200** by a hinge element **202**. The hinge element **202** is pivotally attached to the robot chassis **200** at an aft edge thereof. The liquid storage container **800** is removable from the robot chassis **200** by a user and the user may fill the cleaning fluid supply container S with clean water and a measured volume of cleaning fluid such as soap or detergent. The user may also empty waste from the waste container, compartment, or tank D and flush out the waste container if needed.

To facilitate handling, the integrated liquid storage tank **800** includes a user graspable handle **162** formed integral with the cover assembly **818** at a forward edge of the robot **100**. The handle **162** includes a pivot element **163** attached thereto by a hinge arrangement to the cover assembly **818**. In one mode of operation, a user may grasp the handle **162** to pick up the entire robot **100** thereby. In a preferred embodiment, the robot **100** weights approximately 3-5 kg, (6.6-11 pounds), when filled with liquids, and can be easily carried by the user in one hand.

In a second mode of operation, the handle **162** is used to remove the integrated tank **800** from the chassis **200**. In this mode, the user presses down on an aft edge of the handle **162** to initially pivot the handle downward. The action of the downward pivot releases a latching mechanism, not shown, that attaches a forward edge of the liquid storage container or tank **800** to the robot chassis **200**. With the latching mechanism unlatched the user grasps the handle **162** and lifts vertically upwardly. The lifting force pivots the entire container assembly **800** about a pivot axis **204**, provided by a hinge element which pivotally attached to the aft edge of the chassis **200**. The hinge element **202** supports the aft end of the integrated liquid storage container **800** on the chassis **200** and further lifting of the handle rotates the hinge element **202** to an open position that facilities removal of the container assembly **800** from the chassis **200**. In the open position, the forward edge of the liquid storage container **800** is elevated such that further lifting of the handle **162** lifts the liquid storage tank **800** out of engagement with the hinge element **202** and separates it from the robot **100**.

As shown in FIG. **17**, the integrated liquid storage container **800** is formed with recessed aft exterior surfaces forming a detent area **164** and the detent area **164** is form matched to a receiving area of the hinge element **202**. As shown in FIG. **3**, the hinge element receiving area comprises a clevis-like cradle having upper and lower opposed walls **204** and **206** form matched to engage with and orient the storage container

or tank detent area **164**. The alignment of the detent area **164** and the hinge walls **204** and **206** aligns the integrated storage container **800** with the robot chassis **200** and with the latching mechanism used to attach the container forward edge to the chassis **200**. In particular, the lower wall **206** includes alignment rails **208** form-matched to mate with grooves **808** formed on the bottom side of the detent area **164**. In FIG. **3**, the hinge element **202** is shown pivoted to a fully open position for loading and unloading the storage container or tank **800**. The loading and unloading position is rotated approximately 75° from a closed or operating position; however, other loading and unloading orientations are contemplated. In the loading and unloading position, the storage container detent area **164** is easily engaged or disengaged from the clevis-like cradle of the hinge element **202**. As shown in FIG. **1**, the integrated liquid storage tank **800** and the hinge element **202** are configured to provide finished external surfaces that integrate smoothly and stylishly with other external surfaces of the robot **100**. More importantly, as noted above, the integrated liquid storage tank maximizes internal storage volume while permitting the robot to operate autonomously without sharp edges or corners that catch on walls, corridors, obstacles, or room corners.

Two access ports are provided on an upper surface of the liquid storage container or tank **800** in the detent area **164** and these are shown in FIGS. **16** and **17**. The access ports are located in the detent area **164** so as to be hidden by the hinge element upper wall **204** when the liquid storage tank assembly **800** is in installed in the robot chassis **200**. A left access port **166** provides user access to the waste container, compartment, or tank D through the plenum **562**. A right access port **168** provides user access to the cleaning fluid storage container S. The left and right access ports **166**, **168** are sealed by user removable tank caps that may be color or form coded to be readily distinguishable.

Transport Drive System **900**

In a preferred embodiment, the robot **100** is supported for transport over the cleaning surface by a three-point transport system **900**. The transport system **900** comprises a pair of independent rear transport drive wheel modules **902** on the left side, and **904** on the right side, attached to the chassis **200** aft of the cleaning modules. In a preferred embodiment, the rear independent drive wheels **902** and **904** are supported to rotate about a common drive axis **906** that is substantially parallel with the transverse axis **108**. However, each drive wheel may be canted with respect to the transverse axis **108** such that each drive wheel has its own drive axis orientation. The drive wheel modules **902** and **904** are independently driven and controlled by the master controller **300** to advance the robot in any desired direction. The left drive module **902** is shown protruding from the underside of the chassis **200** in FIG. **3** and the right drive module **904** is shown mounted to a top surface of the chassis **200** in FIG. **4**. In a preferred embodiment, each of the left and right drive modules **902** and **904** is pivotally attached to the chassis **200** and forced into engagement with the cleaning surface by leaf springs **908**, shown in FIG. **3**. The leaf springs **908** are mounted to bias the each rear drive module to pivot downwardly toward the cleaning surface when the drive wheel goes over a cliff or is otherwise lifted from the cleaning surface. A wheel sensor associated with each drive wheel senses when a wheel pivots down and sends a signal to the master controller **300**.

The drive wheels of the present invention are particularly configured for operating on wet soapy surfaces. In particular, as shown in FIG. **20**, each drive wheel **1100** comprises a cup shaped wheel element **1102**, which attaches to the a drive wheel module, **902** and **904**. The drive wheel module includes a drive motor and drive train transmission for driving the drive wheel for transport. The drive wheel module may also include sensor for detecting wheel slip with respect to the cleaning surface.

The cup shaped wheel elements **1102** is formed from a stiff material such as a hard molded plastic to maintain the wheel shape and to provide stiffness. The cup shaped wheel element **1102** provides an outer diameter **1104** sized to receive an annular tire element **1106** thereon. The annular tire element **1106** is configured to provide a non-slip high friction drive surface for contacting the wet cleaning surface and for maintaining traction on the wet soapy surface.

In one embodiment, the annular tire element **1106** has an internal diameter **1108** of approximately 37 mm and is sized to fit appropriately over the outer diameter **1104**. The tire may be bonded, taped or otherwise interference fit to the outer diameter **1104** to prevent slipping between the tire inside diameter **1108** and the outside diameter **1104**. The tire radial thickness **1110** is approximately 3 mm. The tire material is a chloroprene homopolymer stabilized with thiuram disulfide black with a density of 14-16 pounds per cubic foot, or approximately 15 pounds per cubic foot foamed to a cell size of 0.1 mm plus or minus 0.02 mm. The tire has a post-foamed hardness of about 69 to 75 Shore 00. The tire material is sold by Monmouth Rubber and Plastics Corporation under the trade name DURAFOAM DK5151HD.

Other tire materials are contemplated, depending on the particular application, including, for example, those made of neoprene and chloroprene, and other closed cell rubber sponge materials. Tires made of polyvinyl chloride (PVC) and acrylonitrile-butadiene (ABS) (with or without other extractables, hydrocarbons, carbon black, and ash) may also be used. Additionally, tires of shredded foam construction may provide some squeegee-like functionality, as the tires drive over the wet surface being cleaned. Tires made from materials marketed under the trade names RUBATEX R411, R421, R428, R451, and R4261 (manufactured and sold by Rubatex International, LLC); ENSOLITE (manufactured and sold by Armacell LLC); and products manufactured and sold by American Converters/VAS, Inc.; are also functional substitutions for the DURAFOAM DK5151HD identified above.

In certain embodiments, the tire material may contain natural rubber(s) and/or synthetic rubber(s), for example, nitrile rubber (acrylonitrile), styrene-butadiene rubber (SBR), ethylene-propylene rubber (EPDM), silicone rubber, fluorocarbon rubber, latex rubber, silicone rubber, butyl rubber, styrene rubber, polybutadiene rubber, hydrogenated nitrile rubber (HNBR), neoprene (polychloroprene), and mixtures thereof.

In certain embodiments, the tire material may contain one or more elastomers, for example, polyacrilics (i.e. polyacrylonitrile and polymethylmethacrylate (PMMA)), polychlorocarbons (i.e. PVC), polyfluorocarbons (i.e. polytetrafluoromethylene), polyolefins (i.e. polyethylene, polypropylene, and polybutylene), polyesters (i.e. polyetheylene terephthalate and polybutylene terephthalate), polycarbonates, polyamides, polyimides, polysulfones, and mixtures and/or copolymers thereof. The elastomers may include homopolymers, copolymers, polymer blends, interpenetrating networks, chemically modified polymers, grafted polymers, surface-coated polymers, and/or surface-treated polymers.

In certain embodiments, the tire material may contain one or more fillers, for example, reinforcing agents such as carbon black and silica, non-reinforcing fillers, sulfur, cross linking agents, coupling agents, clays, silicates, calcium carbonate, waxes, oils, antioxidants (i.e. para-phenylene diamine antiozonant (PPDA), octylated diphenylamine, and polymeric 1,2-dihydro-2,2,4-trimethylquinoline), and other additives.

In certain embodiments, the tire material may be formulated to have advantageous properties, for example, desired traction, stiffness, modulus, hardness, tensile strength, impact strength, density, tear strength, rupture energy, cracking resistance, resilience, dynamic properties, flex life, abrasion resistance, wear resistance, color retention, and/or chemical resistance (i.e. resistance to substances present in the cleaning solution and the surface being cleaned, for example, dilute acids, dilute alkalis, oils and greases, aliphatic hydrocarbons, aromatic hydrocarbons, halogenated hydrocarbons, and/or alcohols).

It is noted that cell size of the closed cell foam tires may impact functionality, in terms of traction, resistance to contaminants, durability, and other factors. Cell sizes ranging from approximately 20 μm to approximately 400 μm may provide acceptable performance, depending on the weight of the robot and the condition of the surface being cleaned. Particular ranges include approximately 20 μm to approximately 120 μm, with a mean cell size of 60 μm, and more particularly approximately 20 μm to approximately 40 μm, for acceptable traction across a variety of surface and contaminant conditions.

In certain embodiments, the tires are approximately 13 mm wide, although wider tires may provide additional traction. As indicated above, tires may be approximately 3 mm thick, although tires of 4 mm-5 mm in thickness or more may be utilized for increased traction. Thinner tires of approximately 1½ mm and thicker tires of approximately 4½ mm may be beneficial, depending on the weight of the robot, operating speed, movement patterns, and surface textures. Thicker tires may be subject to compression set. If the cleaning robot is heavier, larger tires may be desirable nonetheless. Tires with outer rounded or square edges may also be employed.

To increase traction, the outside diameter of the tire can be siped. Siping generally provides traction by (a) reducing the transport distance for fluid removal from the contact patch by providing a void for the fluid to move into, (b) allowing more of the tire to conform to the floor, thereby increasing tread mobility, and (c) providing a wiping mechanism that aids in fluid removal. In at least one instance, the term "siped" refers to slicing the tire material to provide a pattern of thin grooves **1110** in the tire outside diameter. In one embodiment, each groove has a depth of approximately 1.5 mm and a width or approximately 20 to 300 microns. The siping may leave as little as ½ mm or Jess of tire base, for example, 3½ mm deep siping on a 4 mm thick tire. The groove pattern can provide grooves that are substantially evenly spaced apart, with approximately 2 to 200 mm spaces between adjacent grooves. "Evenly spaced" may mean, in one instance, spaced apart and with a repeating pattern, not necessarily that every siped cut is the same distance from the next. The groove cut axis makes an angle G with the tire longitudinal axis. The angle G ranges from about 10-50 degrees, in certain embodiments.

In other embodiments, the siping pattern is a diamond-shaped cross hatch at 3.5 mm intervals, which may be cut at alternating 45 degree angles (+/−10 degrees) from the rotational axis. Substantially circumferential siping, siping that forces away liquid via channels, and other siping patterns are also contemplated. Depth and angle of siping may be modified, depending on particular applications. Moreover, while increased depth or width of siping may increase traction, this benefit should be balanced against effecting the structural integrity of the tire foam. In certain embodiments, for example, it has been determined that 3 mm-4 mm thick tires with diamond crossed siping at 7 mm intervals provides good tire traction. Larger tires may accommodate a finer pattern, deeper siping, and/or wider siping. Additionally, particularly wide tires or tires made from certain materials may not require any siping for effective traction. While certain siping patterns may be more useful on wet or dry surfaces, or on different types of surfaces, siping that provides consistent traction across a variety of applications may be the most desirable for a general purpose robot cleaner.

The various tire materials, sizes, configurations, siping, etc., impact the traction of the robot during use. In certain embodiments, the robot's wheels roll directly through the spray of cleaning solution, which effects the traction, as do the contaminants encountered during cleaning. A loss of traction of the wheels may cause operating inefficiencies in the form of wheel slippage, which can lead to the robot deviating from its projected path. This deviation can increase cleaning time and reduce battery life. Accordingly, the robot's wheels should be of a configuration that provides good to excellent traction on all surfaces, with the smallest corresponding motor size.

Typical contaminants encountered during cleaning include chemicals, either discharged by the robot or otherwise. Whether in a liquid state (e.g., pine oil, hand soap, ammonium chloride, etc.) or a dry state (e.g., laundry powder, talcum powder, etc.), these chemicals may break down the tire material. Additionally, the robot tires may encounter moist or wet food-type contaminants (e.g., soda, milk, honey, mustard, egg, etc.), dry contaminants (e.g., crumbs, rice, flour, sugar, etc.), and oils (e.g., corn oil, butter, mayonnaise, etc.). All of these contaminants may be encountered as residues, pools or slicks, or dried patches. The tire materials described above have proven effective in resisting the material breakdown caused by these various chemicals and oils. Additionally, the cell size and tire siping described has proven beneficial in maintaining traction while encountering both wet and dry contaminants, chemical or otherwise. Dry contaminants at certain concentrations, however, may become lodged within the siping. The chemical cleaner used in the device, described below, also helps emulsify certain of the contaminants, which may reduce the possible damage caused by other chemical contaminants by diluting those chemicals.

In addition to contaminants that may be encountered during use, the various cleaning accessories (e.g., brushes, squeegees, etc.) of the device effect the traction of the device. The drag created by these devices, the character of contact (i.e., round, sharp, smooth, flexible, rough, etc.) of the devices, as well as the possibility of slippage caused by contaminants, varies depending on the surface being cleaned. Limiting the areas of contact between the robot and the surface being cleaned reduces attendant friction, which improves tracking and motion. One and one-half pounds of drag force versus three to five pounds of thrust has proven effective in robots weighing approximately 5-15 pounds. Depending on the weight of the robot cleaner, these numbers may vary, but it is noted that acceptable performance occurs at less than about 50% drag, and is improved with less than about 30% drag.

The tire materials (and corresponding cell size, density, hardness, etc.), siping, robot weight, contaminants encountered, degree of robot autonomy, floor material, and so forth, all impact the total traction coefficients of the robot tires. For certain robot cleaners, the coefficient of traction (COT) for the minimum mobility threshold has been established by dividing a two lb. drag (as measured during squeegee testing) by six lbs of normal force, as applied to the tires. Thus, this minimum mobility threshold is approximately 0.33. A target threshold of 0.50 was determined by measuring the performance of shredded black foam tires. Traction coefficients of many of the materials described above fell within a COT

range of 0.25 to 0.47, thus within the acceptable range between the mobility threshold and the target threshold. Additionally, tires that exhibit little variability in traction coefficients between wet and dry surfaces are desirable, given the variety of working conditions to which a cleaning robot is exposed.

The robot cleaning device may also benefit by utilizing sheaths or booties that at least partially or fully surround the tires. Absorbent materials, such as cotton, linen, paper, silk, porous leather, chamois, etc., may be used in conjunction with the tires to increase traction. Alternatively, these sheaths may replace rubberized wheels entirely, by simply mounting them to the outer diameter **1104** of the cup shaped wheel element **1102**. Whether used as sheaths for rubber tires or as complete replacements for the rubber tires, the materials may be interchangeable by the user or may be removed and replaced via automation at a base or charging station. Additionally, the robot may be provided to the end user with sets of tires of different material, with instructions to use particular tires on particular floor surfaces.

The cleaning solution utilized in the robot cleaner should be able to readily emulsify contaminants and debond dried waste from surfaces, without damaging the robot or surface itself. Given the adverse effects described above with regard to robot tires and certain chemicals, the aggressiveness of the cleaning solution should be balanced against the short and long-term negative impacts on the tires and other robot components. In view of these issues, virtually any cleaning material that meets the particular cleaning requirements may be utilized with the cleaning robot. In general, for example, a solution that includes both a surfactant and a chelating agent may be utilized. Additionally, a pH balancing agent such as citric acid may be added. Adding a scent agent, such as eucalyptus, lavender, and/or lime, for example, may improve the marketability of such a cleaner, contributing to the perception on the part of the consumer that the device is cleaning effectively. A blue, green, or other noticeable color may also help distinguish the cleaner for safety or other reasons. The solution may also be diluted and still effectively clean when used in conjunction with the robot cleaner. During operation, there is a high likelihood that the robot cleaner may pass over a particular floor area several times, thus reducing the need to use a full strength cleaner. Also, diluted cleaner reduces the wear issues on the tires and other components, as described above. One such cleaner that has proven effective in cleaning, without causing damage to the robot components, includes alkyl polyglucoside (for example, at 1-3% concentration) and tetrapotassium ethylenediamine-tetraacetate (tetrapotassium EDTA) (for example, at 0.5-1.5% concentration). During use, this cleaning solution is diluted with water to produce a cleaning solution having, for example, approximately 3-6% cleaner and approximately 94-97% water. Accordingly, in this case, the cleaning solution actually applied to the floor may be as little as 0.03% to 0.18% surfactant and 0.01 to 0.1% chelating agent. Of course, other cleaners and concentrations thereof may be used with the disclosed robot cleaner.

For example, the families of surfactants and chelating agents disclosed in U.S. Pat. No. 6,774,098, the disclosure of which is hereby incorporated by reference in its entirety, are also suitable for application in the robot having the tire materials and configurations disclosed. To balance the aggressiveness of the cleaners disclosed in the '098 patent with the wear caused on the machine components, however, it is preferred that the cleaning agents should (i) include no solvent, or include solvent at a percentage lower than that of the chelating agent of an alcohol solvent, or have the disclosed solvents in ½ to 1/100 the concentrations, and/or (ii) be further diluted for deterministic single pass, deterministic repeat passes, or random multipass use in a robot by 20%+/−15% (single pass), 10%+/−8% (repeat pass), and from 5% to 0.1% (random multipass) respectively, of the concentrations disclosed; and/or (iii) be further combined with an anti-foaming agent known to be compatible with the selected surfactant and chelating agent in percentages the same as or lower than commercial carpet cleaners, e.g., less than 5% of silicone emulsion, and/or (iv) replaced with or compatibly mixed with an odor remover of viable bacterial cultures.

In certain embodiments, the cleaning solution utilized in the robot cleaner includes (or is) one or more embodiments of the "hard surface cleaner" described in U.S. Pat. No. 6,774,098, preferably subject to (i), (ii), (iii), and/or (iv) above. Certain embodiments of the "hard surface cleaner" in U.S. Pat. No. 6,774,098, are described in the following paragraphs.

In one embodiment, the hard surface cleaner comprises: (a) a surfactant system consisting of amine oxides within the general formula (I):

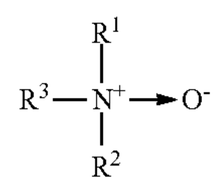

(I)

or quaternary amine salts within the general formula (II):

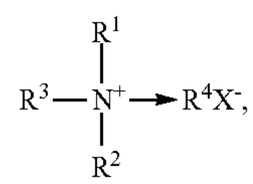

(II)

or combinations of the foregoing amine oxides and quaternary amine salts; and (b) a very slightly water-soluble polar organic compound having a water solubility ranging from about 0.1 to 1.0 weight percent, a weight ratio of the very slightly water-soluble polar organic compound to the surfactant system ranging from about 0.1:1 to about 1:1, wherein R^1 and R^2 are the same or different and are selected from the group consisting of methyl, ethyl, propyl, isopropyl, hydroxyethyl and hydroxypropyl, R^3 is selected from the group consisting of straight chain alkyls, branched chain alkyls, straight chain heretroalkyls, branched chain heteroalkyls and alkyl ethers, each having from about 10 to 20 carbon atoms, R^4 is selected from the group consisting of alkyl groups having from 1 to about 5 carbon atoms, and X is a halogen atom.

In another embodiment, the hard surface cleaner comprises: (a) either (i) a combination of a nonionic surfactant and a quaternary ammonium surfactant or (ii) an amphoteric surfactant, the total amount of the surfactant being present from about 0.001-10%, wherein the nonionic surfactant is selected from the group consisting of an alkoxylated alkylphenol ether, an alkoxylated alcohol, or a semi-polar nonionic surfactant which itself is selected from the group consisting of mono-long-chain alkyl, di-short-chain trialkyl amine oxides, alkylamidodialkyl amine oxides, phosphine oxides and sulfoxides; (b) no more than 50% of at least one water-soluble or dispersible organic solvent having a vapor pressure of at least 0.001 mm Hg at 25° C.; (c) 0.01-25% of tetraammonium ethylenediamine-tetraacetate (tetraammonium EDTA) as a chelating agent; and (d) water.

In yet another embodiment, the hard surface cleaner comprises (a) a surfactant selected from the group consisting of anionic, nonionic surfactants, and mixtures thereof, with optionally, a quaternary ammonium surfactant, the total amount of surfactant being present from about 0.001-10% by weight; (b) at least one water-soluble or dispersible organic solvent having a vapor pressure of at least 0.001 mm Hg at 25° C., the at least one organic solvent being selected from the group consisting of alkanols, diols, glycol ethers, and mixtures thereof present in an amount from about 1% to 50% by weight of the cleaner; (c) tetrapotassium ethylenediamine-tetraacetate (potassium EDTA) as a chelating agent, the potassium EDTA present from about 0.01-25% weight-of the cleaner; and (d) water.

In still another embodiment, the hard surface cleaner comprises (a) a nonionic surfactant with optionally, a quaternary ammonium surfactant, the total amount of the surfactant being present from about 0.001-10%, wherein the nonionic surfactant is selected from the group consisting of an alkoxylated alkylphenol ether, an alkoxylated alcohol, or a semi-polar nonionic surfactant which itself is selected from the group consisting of mono-long-chain alkyl, di-short-chain trialkyl amine oxides, alkylamidodialkyl amine oxides, phosphine oxides and sulfoxides; (b) no more than 50% of at least one water-soluble or dispersible organic solvent having a vapor pressure of at least 0.001 mm Hg at 25° C.; (c) 0.01-25% of tetraammonium ethylenediamine-tetraacetate (tetraammonium EDTA) as a chelating agent; and (d) water.

In certain embodiments, the hard surface cleaner has a viscosity of less than about 100 cps and comprises: (a) at least about 85% water, in which is dissolved (b) at least about 0.45 equivalent per kilogram of an inorganic anion which, when combined with calcium ion, forms a salt which has a solubility of not more than 0.2 g/100 g water at 25° C., wherein the anion is carbonate, fluoride, or metasilicate ion, or a mixture of such anions, (c) at least 0.3% by weight, based on the weight of the composition, of a detersive surfactant including an amine oxide of the form $RR^1R^2N{\rightarrow}O$ wherein R is C_6-C_{12} alkyl and R^1 and R^2 are independently C_{1-4} alkyl or C_{1-4} hydroxyalkyl, and (d) at least about 0.5 weight percent of a bleach, based upon the weight of the composition, wherein the cleaning composition is alkaline and essentially free of chelating agents, phosphorous-containing salt, and abrasive.

In certain embodiments, the cleaning solution utilized in the robot cleaner includes (or is) one or more embodiments of the hard surface cleaners described in U.S. Pat. Nos. 5,573,710, 5,814,591, 5,972,876, 6,004,916, 6,200,941, and 6,214,784, all of which are incorporated herein by reference.

U.S. Pat. No. 5,573,710 discloses an aqueous multiple-surface cleaning composition which can be used for the removal of grease and stains from hard surfaces or hard fibrous substrates such as carpet and upholstery. The composition contains (a) a surfactant system consisting of amine oxides within the general formula (I):

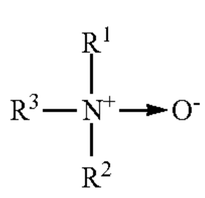

(I)

or quaternary amine salts within the general formula (II):

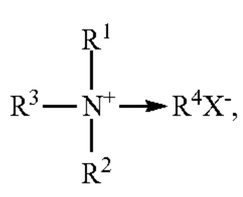

(II)

or combinations of the foregoing amine oxides and quaternary amine salts; and (b) a very slightly water-soluble polar organic compound. The very slightly water-soluble polar organic compound may have a water solubility ranging from about 0.1 to 1.0 weight percent, and the weight ratio of the very slightly water-soluble polar organic compound to the surfactant system may range from about 0.1:1 to about 1:1. R^1 and R^2 may be selected from the group consisting of methyl, ethyl, propyl, isopropyl, hydroxyethyl and hydroxypropyl. R^1 and R^2 may be the same or different. R^3 may be selected from the group consisting of straight chain alkyls, branched chain alkyls, straight chain heretroalkyls, branched chain heteroalkyls and alkyl ethers, each having from about 10 to 20 carbon atoms. R^4 may be selected from the group consisting of alkyl groups having from 1 to about 5 carbon atoms. X is a halogen atom.

In certain cases, the composition further includes a water soluble organic compound in an amount effective to reduce streaking. The water soluble organic compound may be selected from water soluble glycol ethers and water soluble alkyl alcohols. The water soluble organic compound may have a water solubility of at least 14.5 weight percent. The weight ratio of the surfactant system to the water soluble organic compound may range from about 0.033:1 to about 0.2:1.

U.S. Pat. No. 5,814,591 describes an aqueous hard surface cleaner with improved soil removal. The cleaner includes (a) either (i) a nonionic, an amphoteric surfactant, or a combination thereof, or (ii) a quaternary ammonium surfactant, the surfactants being present in a cleaning-effective amount; (b) at least one water-soluble or dispersible organic solvent having a vapor pressure of at least 0.001 mm Hg at 25° C., the at least one organic solvent present in a solubilizing- or dispersion-effective amount; (c) ammonium ethylenediamine-tetraacetate (ammonium EDTA) as a chelating agent, the ammonium EDTA present in an amount effective to enhance soil removal in the cleaner; and (d) water. The total surfactant maybe present in an amount from about 0.001-10%. In a concentrated product, the surfactant may be present up to 20% by weight. The nonionic surfactant may be selected from the group consisting of an alkoxylated alkylphenol ether, an alkoxylated alcohol, or a semi-polar nonionic surfactant which itself is selected from the group consisting of mono-long-chain alkyl, di-short-chain trialkyl amine oxides, alkylamidodialkyl amine oxides, phosphine oxides and sulfoxides. The at least one water-soluble or dispersible organic solvent may be present in an amount of no more than 50% by weight of the cleaner. The ammonium EDTA may be a tetraammonium EDTA and present in an amount of about 0.01-25% by weight of the total cleaner.

U.S. Pat. No. 5,972,876 discloses an aqueous hard surface cleaner comprising (a) a surfactant selected from the group consisting of anionic, nonionic surfactants, and mixtures thereof, with optionally, a quaternary ammonium surfactant, the total amount of surfactant being present in a cleaning-effective amount; (b) at least one water-soluble or dispersible organic solvent having a vapor pressure of at least 0.001 mm Hg at 25° C., the organic solvent being present in a solubilizing- or dispersion-effective amount; (c) tetrapotassium ethylenediamine-tetraacetate (potassium EDTA) as a chelating agent, the potassium EDTA present in an amount effective to enhance soil removal in the cleaner; and (d) water. The total amount of surfactant may be present from about 0.001-10% by weight. The at least one organic solvent may be selected from the group consisting of alkanols, diols, glycol ethers, and mixtures thereof, and is present in an amount from about 1% to 50% by weight of the cleaner. The potassium EDTA may be present from about 0.01-25% weight-of the cleaner.

U.S. Pat. No. 6,004,916 discloses an aqueous, hard surface cleaner which contains (a) either a nonionic or amphoteric surfactant with optionally, a quaternary ammonium surfactant, the surfactants being present in a cleaning-effective amount; (b) at least one water-soluble or dispersible organic solvent having a vapor pressure of at least 0.001 mm Hg at 25° C., the at least one organic solvent present in a solubilizing- or dispersion-effective amount; (c) ammonium ethylenediamine-tetraacetate (ammonium EDTA) as a chelating agent, the ammonium EDTA present in an amount effective to enhance soil removal in the cleaner; and (d) water. The surfactant may be a nonionic surfactant with optionally, a quaternary ammonium surfactant. The nonionic surfactant may be selected from the group consisting of an alkoxylated alkylphenol ether, an alkoxylated alcohol, or a semi-polar nonionic surfactant which itself is selected from the group consisting of mono-long-chain alkyl, di-short-chain trialkyl amine oxides, alkylamidodialkyl amine oxides, phosphine oxides and sulfoxides. The total amount of the surfactant may be present from about 0.001-10%. The at least one water-soluble or dispersible organic solvent may be present in an amount of no more than 50% by weight of the cleaner. The ammonium EDTA may be a tetraammonium EDTA which is present in an amount from 0.01-25% by weight of the total cleaner.

U.S. Pat. No. 6,200,941 discloses a diluted hard surface cleaning composition. The cleaning composition contains (a) at least about 85% water, in which is dissolved (b) at least about 0.45 equivalent per kilogram of an inorganic anion which, when combined with calcium ion, forms a salt which has a solubility of not more than 0.2 g/100 g water at 25° C.; (c) at least 0.3% by weight, based on the weight of the composition, of a detersive surfactant. The composition preferably has a viscosity of less than about 100 cps. The anion may be carbonate, fluoride, or metasilicate ion, or a mixture of such anions. The detersive surfactant may include an amine oxide of the form $RR^1R^2N{\rightarrow}O$ wherein R is C_6-C_{12} alkyl and R^1 and R^2 are independently C_{1-4} alkyl or C_{1-4} hydroxyalkyl. The composition may further contain at least about 0.5 weight percent of a bleach, based upon the weight of the composition. In one case, the cleaning composition is alkaline and essentially free of chelating agents, phosphorous-containing salt, and abrasive.

U.S. Pat. No. 6,214,784 describes a composition similar to that disclosed in U.S. Pat. No. 5,972,876. The composition may include dipotassium carbonate as a buffers.

Optionally, the cleaning fluid may be used to cool the motor or the motor may be used to heat the cleaning fluid. The motor used to turn the main cleaning brush dissipates considerable energy in the form of heat. This heat reduces motor and electronics life. It is possible to duct the cleaning fluid around this motor so that the heat is transferred from the motor to the heat. This may improve cleaning performance and reduce stress on the motor. A structure would include ducting, heat transfer compounds, and heat conductive materials for the ducting and/or motor parts in contact with the ducting. In addition, the use of a wet rotor motor for the fluid pump or brush drive would allow the motor to be submersed in the clean tank which could simplify connections as well as deposit waste heat into the cleaning fluid.

The nose wheel module **960**, shown in exploded view in FIG. **18** and in section view in FIG. **19**, includes a nose wheel **962** housed in a caster housing **964** and attached to a vertical support assembly **966**. The nose wheel module **960** attaches to the chassis **200** forward of the cleaning modules and provide a third support element for supporting the chassis **200** with respect to the cleaning surface. The vertical support assembly **966** is pivotally attached to the caster housing **964** at a lower end thereof and allows the caster housing to pivot away from the chassis **200** when the chassis is lifted from the cleaning surface or when the nose wheel goes over a cliff. A top end of the vertical support assembly **966** passes through the chassis **200** and is rotatably with respect thereto to allow the entire nose wheel module **960** to rotate freely about a substantially vertical axis as the robot **100** is being transported over the cleaning surface by the rear transport drive wheels **902** and **904**. Accordingly, the nose wheel module is self-aligning with respect to the direction of robot transport.

The chassis **200** is equipped with a nose wheel mounting well **968** for receiving the nose wheel module **960** therein. The well **968** is formed on the bottom side of the chassis **200** at a forward circumferential edge thereof. The top end of the vertical support assembly **966** passes through a hole through the chassis **200** and is captured in the hole to attach the nose wheel to the chassis. The top end of the vertical support assembly **966** also interfaces with sensor elements attached to the chassis **200** on its top side.

The nose wheel assembly **962** is configured with a molded plastic wheel **972** having axle protrusions **974** extending therefrom and is supported for rotation with respect to the caster housing **964** by opposed co-aligned axle holes **970** forming a drive wheel rotation axis. The plastic wheel **972** includes with three circumferential grooves in its outer diameter. A center groove **976** is providing to receive a cam follower **998** therein. The plastic wheel further includes a pair of symmetrically opposed circumferential tire grooves **978** for receiving an elastomeric o-ring **980** therein. The elastomeric o-rings **980** contacts the cleaning surface during operation and the o-ring material properties are selected to provide a desired friction coefficient between the nose wheel and the cleaning surface. The nose wheel assembly **962** is a passive element that is in rolling contact with the cleaning surface via the o-rings **980** and rotates about its rotation axis formed by the axle protrusion **974** when the robot **100** is transported over the cleaning surface.

The caster housing **964** is formed with a pair of opposed clevis surfaces with coaligned opposed pivot holes **982** formed therethrough for receiving the vertical support assembly **966** therein. A vertical attaching member **984** includes a pivot element **986** at its bottom end for installing between the clevis surfaces. The pivot element **986** includes a pivot axis bore **988** formed therein for alignment with the co-aligned pivot hole **982**. A pivot rod **989** extends through the co-aligned pivot holes **982** and is press fit within the pivot axis bore **988** and captured therein. A torsion spring **990** installs over the pivot rod **988** and provides a spring force that biases the caster housing **964** and nose wheel assembly **962** to a downwardly extended position forcing the nose wheel **962** to rotate to an orientation that places the nose wheel **962** more distally below the bottom surface of the chassis **200**. The downwardly extended position is a non-operating position. The spring constant of the torsion spring **990** is small enough that the weight of the robot **100** overcomes its biasing force when the robot **100** robot is placed onto the cleaning surface for cleaning. Alternately, when the nose wheel assembly goes over a cliff, or is lifted off the cleaning surface, the torsion spring biasing force pivots the nose wheel to the downwardly extended non-operating position. This condition is sensed by a wheel down sensor, described below, and a signal is sent to the master controller **300** to stop transport or to initiate some other action.

The vertical attaching member **984** includes a hollow vertical shaft portion **992** extending upward from the pivot element **986**. The hollow shaft portion **992** passes through the

hole in the chassis **200** and is captured therein by an e-ring retainer **994** and thrust washer **996**. This attaches the nose wheel assembly **960** to the chassis and allows it to rotate freely about a vertical axis when the robot is being transported.

The nose wheel module **960** is equipped with sensing elements that generate sensor signals used by the master control module **300** to count wheel revolutions, to determine wheel rotational velocity, and to sense a wheel down condition, i.e. when the caster **964** is pivoted downward by the force of the torsion spring **990**. The sensors generate a wheel rotation signal using a cam following plunger **998** that include a sensor element that moves in response to wheel rotation. The cam follower **998** comprises an "L" shaped rod with the a vertical portion being movably supported inside the hollow shaft **992** thus passing through the hole in the chassis **200** to extend above the top surface thereof. The lower end of the rod **992** forms a cam follower that fits within the wheel center circumferential groove **976** and is movable with respect thereto. The cam follower **998** is supported in contact with an offset hub **1000** shown in FIG. **18**. The offset hub **1000** comprises an eccentric feature formed non-symmetrically about the nose wheel rotation axis inside the circumferential groove **976**. With each rotation of the wheel **962**, the offset hub **1000** forces and oscillation of the cam follower **998** which moves reciprocally along a substantially vertical axis.

FIGS. **33-35** show an alternative structure for the front caster. As shown in FIGS. **33-34**, the front caster may be generally structured as previously described, and with a design that integrates the functions of a stasis sensor (to determine that the undriven front caster is turning) and a wheel drop switch (to determine that it is no longer in contact with the ground). A fishhook shaped member **998** having a vertical shaft and a horizontal hook is looped around an eccentric boss **999** formed in the middle of the caster wheel. While the caster wheel rotates about its rotational axis for forward motion and about the support **984** to turn, the fishhook member sensor member **998** may turn within the support **984** freely (without impeding turning of the caster) but may also slide vertically within the support **984**. As the actuator moves up and down sinusoidally, one sensor (as described herein, generally an optical or magnetic "stasis" sensor near the top of the member **998**) may be used to track whether the robot moves forward. Alternatively, two sensors are used, one near each vertical end of the possible travel of the member **998**, i.e., separated by substantially twice the offset of the boss **999**. Two sensors improve resolution. Alternatively, the two sensors may be modeled as, or replaced with a linear sensor to provide an analog profile over time of the wheel rotation (e.g., even with only two sensors, if placed carefully, the analog output strength of the optical, magnetic, or electrical detection of the opposite ends of the member **998** can provide opposite ends of a substantially sinusoidal signal upon rotation, giving speed and limited odometry information). These are placed according to the position of the front caster on its suspension during normal use of the robot. Additionally, a wheel-drop sensor (again, optical, magnetic, or the like) is placed below the stasis sensors. As noted, the wheel is biased on its support housings **984**, **970** to pivot to move within a swinging vertical range and provide a springed suspension. Should the robot's front wheel drop over a cliff or upon picking up the robot, as the member **998** moves into or below the range of the wheel-drop sensor, this may be detected. Accordingly, the assembly with member **998** and sensors works as a stasis sensor and a wheel-drop sensor, and may also act as a speed sensor. As noted herein, siping of the tire material is a cross-hatch of diagonal cuts. These cuts may be at angles from 20-70 degrees from the forward motion line of the robot.

A once per revolution wheel sensor includes a permanent magnet **1002** attached to the top end of the "L" shaped rod by an attaching element **1004**. The magnet **1002** oscillates through a periodic vertical motion with each full revolution of the nose wheel. The magnet **1002** generates a magnetic field which is used to interact with a reed switch, not shown, mounted to the chassis **200** in a fixed location with respect to moving magnet **1002**. The reed switch is activated by the magnetic field each time the magnet **1002** is in the full up position in its travel. This generates a once per revolution signal which is sensed by the master controller **300**. A second reed switch may also be positioned proximate to the magnet **1002** and calibrated to generate a wheel down signal. The second reed switch is positioned in a location that will be influenced by the magnetic field when the magnet **1002** drops to the non-operating wheel down position.

Basic Form Factor

In one embodiment of robot of the present invention, the diameter of the robot circular cross-section **102** is 370 mm or 14.57 inches, i.e., approximately 35-40 cm or 12-15 in., and the height of the robot **100** above the cleaning surface is 85 mm or 3.3 inches, i.e., approximately 70-100 mm or 3-4½ inches. This size will navigate household doorways, under toe kicks, and clean under many typical chairs, tables, portable islands, and stools, and behind and beside some toilets, sink stands, and other porcelain fixtures. However, the autonomous cleaning robot **100** of the present invention may be built with other cross-sectional diameter and height dimensions, as well as with other cross-sectional shapes, e.g. square, rectangular and triangular, and volumetric shapes, e.g. cube, bar, and pyramidal. The height of the robot is less than that of a 10" cabinet toe kick (approximately the height of a wheelchair-accessible toe kick or European toe kicks), and preferably less than that of a 4" cabinet toe kick (the lowest American standard). Alternatively, the height of that portion of the robot that cleans into the toe kick may be so limited, with the remainder of the robot being higher.

One embodiment of a robot according to the invention uses a highly integrated physical structure and is manufacturable as a mass-produced commercial product. As shown in FIG. **1**B, such an embodiment includes several parts: the robot body, the wet fluid tank, the battery, and a cleaning head. The tank may be a structural element (for example, the robot is carried by the tank handle with the fluid full), or the robot can be a chassis-body structure or set of self-supporting monocoque structures. Defined in certain circumstances, monocoque may mean "substantially monocoque" or "at least partially monocoque," and other alternative definitions are not excluded (e.g., robots having supporting ribs or frames, or including a load bearing body that could also have chassis-like elements such as cantilever support for other elements). Robots having a variety of components fall within the scope of this invention. On such cleaning robot includes a motor-driven brush or wiper, a first housing that accommodates a fluid tank, and a second housing that accommodates a steerable drive mechanism. A coupling mechanism couples the first housing to the second housing to form a substantially cylindrical outer surface of the cleaning robot. The cleaning robot dispenses fluid from the fluid tank and brushes or wipes a surface made wet by the fluid.

In another embodiment, the cleaning robot includes a motor-driven brush or wiper, a tank formed as a upper cylinder section that stores fluid, and a platform, formed as a lower cylinder section. The platform accommodates a steerable

drive mechanism. A coupling mechanism couples the tank to the platform, the upper cylinder section of the tank matching the lower cylinder section of the platform to form a substantially cylindrical outer surface of the cleaning robot.

The integration of a fluid tank as part of a cylindrical body enables wet cleaning to be carried out by an autonomous robot with the maximum possible cleaning time. If the body as a whole is not cylindrical, i.e., does not have a circular perimeter, autonomy is effected, as escape from corners and corridors slightly larger than the robot becomes more difficult. By integrating the fluid tank into the robot body, tank volume may be maximized. Other shapes of constant width (reuleaux triangle or constant width polygon) are also possible as a perimeter shape, and are considered to fall within the meaning of the term "cylindrical" for the purposes of this specification, but the circular perimeter has the maximum internal area of constant width shapes and therefore the maximum potential fluid capacity.

Still another embodiment of the cleaning robot described herein includes a waste fluid compartment, a dispensed fluid compartment, a partially monocoque tank that accommodates at least one of the waste fluid compartment or dispensed fluid compartment, and a partially monocoque platform that accommodates a steerable drive mechanism. A coupling mechanism couples the partially monocoque tank to the partially monocoque platform to form a substantially cylindrical outer surface of the cleaning robot. The cleaning robot brushes a surface made wet at least in part by fluid dispensed by the cleaning robot.

Another embodiment includes a motor-driven brush or wiper, a tank that accommodates a fluid compartment for storing fluid, a platform including a mount that receives the tank, a fluid connection between the tank and the platform, and a vacuum connection between the tank and the platform. A coupling mechanically engages the tank to the platform. The engagement of the coupling seals the fluid connection and the vacuum connection and forms a substantially cylindrical outer surface of the cleaning robot. The cleaning robot brushes a surface made wet at least in part by fluid from the fluid compartment. The fluid from the fluid compartment may be, but is not necessarily, picked up by the vacuum (which could pick up just dry particulates before the brush or wiper).

Still another embodiment includes a motor-driven brush or wiper, a monocoque tank that accommodates a fluid compartment, and a platform including a pivoting mount that receives one end of the tank and that is rotatable to match the monocoque tank to the platform. A coupling mechanically engages the monocoque tank to the platform, so that the engagement of the coupling forms a substantially cylindrical outer surface of the cleaning robot. The cleaning robot brushes a surface made wet at least in part by fluid from the fluid compartment. The pivoting mount can optionally be arranged to receive the tank at the same angle as a user would carry it. If the tank hangs from a user's hand at an angle due to a handle configuration, then the tank could

Yet another embodiment of the robot cleaner includes a motor-driven brush or wiper, a tank that accommodates a fluid compartment for storing fluid, a platform including a mount that receives the tank, a fluid connection between the tank and the platform, and a vacuum connection between the tank and the platform. A coupling mechanically engages the tank to the platform, such that the engagement of the coupling seals the fluid connection and the vacuum connection and forms a substantially cylindrical outer surface of the cleaning robot. The cleaning robot brushes a surface made wet at least in part by fluid from the fluid compartment.

In still another embodiment, the cleaning robot includes a tank that accommodates a fluid compartment for storing fluid, a cleaning head that includes a motor-driven brush and a vacuum, and a platform. The platform includes a first receptacle that receives a battery. A mount receives the tank so that the tank covers the battery. The battery need not be below the tank, it may be directly attached to the body on top or side. Additionally, the cleaning head, in one embodiment, is not removable or replaceable unless the tank is pivoted up, since the tanks and related components may create an interlock with the cleaning head when the tank is latched in place.

The cleaning head may be considered part of the platform, or optionally a second receptacle may receive the cleaning head from one side of the platform. The robot may include a fluid connection between the tank and the platform (as one example, so that the platform can dispense fluid) and a vacuum connection between the tank and the platform and/or cleaning head (as one example, so that material vacuumed by the platform can be deposited in the tank). Either or both of the vacuum connection and the fluid connection can be made directly between the tank and the cleaning head, e.g., by matching seals on the tank and the cleaning head. A coupling may mechanically engage the tank to the platform, and may seal the fluid connection and the vacuum connection.

Although all of the above combinations may use a brush or wiper, use of a brush causes less friction than wipers; moreover, the many bristles of a rotating brush still provide continuous and continuously repeating contact with a surface. The word "brush" includes pads, brushes, sponges, cloths, etc., that could be rotated, reciprocated, orbital, belt-driven, move with the robot, etc.

Although different ratios are possible, it is advantageous to maximize fluid tank volume if the fluid tank is more than 50% of the top surface, up to 50% of the side wall, and less than 50% of the bottom surface of the robot. However, it is more advantageous if the fluid tank is less than 25% of the bottom surface, and more than 75% of the top surface, as this balances the need to support the tank with the most volume.

As noted herein, the motor-driven brush is accommodated in a cleaning head which is removably inserted in the side of the first housing, and has a locking, click-lock, click-in/click-out or detent mechanism to hold it in place and maintain seals and connections. This construction, allows the cleaning head to be removed without removing the tank. If the battery is below the tank but above the body, the cleaning head can also be removed without removing the battery. A battery can be similarly arranged, using a similar structure, to be removably inserted from the side of the robot, with an optional locking, click-lock, click-in/click-out or detent mechanism to maintain electrical connections. The battery may also be integrated in either the tank or the body, and may include one or more replaceable, rechargeable, or replenishable batteries, fuel cells, or fuel tanks, or any combination thereof.

The coupling mechanism for securing the tank to the body can include a handle of the fluid tank, the entire substantially cylindrical robot, or the tank alone being rendered portable via the fluid tank handle. The handle may also include a locking, click-lock, click-in/click-out or detent mechanism. The handle as depicted herein includes a mechanism that accommodates a push to click-lock the tank to the body, another push to release the tank from the body, yet pulls up to use as a handle. The coupling mechanism may include a pivot and a lock, the pivot receiving one end of the tank and rotating the tank to engage the lock

Many of the above embodiments utilize a tank structure that functions as both a fluid compartment and a support or structural element of the robot. Additionally, the tank may

accommodate both clean and dirty fluid compartments, as in the depicted embodiment. Alternatively, an additional tank may provided to separate clean and dirty fluids, and/or for a concentrate to be mixed with water in one of the tanks. More compartments could be provided (e.g., a compartment for a defoamer, a compartment for fuel, etc.). The embodiment demonstrates the manner in which a tank or combined tank may self-support or act as a structural member; one of skill in the art would recognize that the same types of couplings and supports could be readily modified for more than one tank.

As noted herein the two compartments of the tank are arranged such that as fluid moves from one compartment to the ground and then is picked up, the center of gravity remains substantially in place, and/or remains substantially over the driving wheels. The present structure uses compartments that are stacked or partially stacked on top of one another with their compartment-full center of gravity within 10 cm of one another. Alternatively, the compartments may be concentric (concentric such that one is inside the other in the lateral direction); may be interleaved (e.g., interleaved L shapes or fingers in the lateral direction); or all of or a portion of the clean compartment may be a flexible bladder within the dirty compartment and surrounded by the dirty compartment, such that the flexible bladder compresses as clean fluid leaves it but dirty fluid filling the dirty compartment takes the place of the clean fluid. The flexible bladder may be a portion of the bottom of the clean tank that accordions, flexes, or expands into the dirty tank. For example, in FIG. **27**, the circle sector flat portions of the second plastic element (tank middle) **812** to the left and/or right of the aperture **562***a* (as depicted in FIG. **27**) may be formed as a flexing, expanding, or accordion part that expands into the waste tank. For this purpose, the plenum **562** may be arranged with straight sides in those directions.

Within a tank, various types of constructions of the compartments are possible: they may be separate, be joined by a wall (as depicted), be separate deformable compartments, or be nested compartments. Certain compartments may be nested and deformable or may include a collapsible wall which separates compartments. Walls separating compartments may be hinged, accordion, etc., and compartments may be separated by one or more semi permeable, osmotic or reverse osmotic membranes or other filters. Either of "compartment" or "tank" can be rigid, deformable, or collapsible, except where specified otherwise. The same compartment can be used for two different fluids in different circumstances (water and premixed cleaner compartment; treatment or polish compartment, and the like). Compartments within a tank may be used for water or solvent, mixed cleaning solution, concentrate, dirty fluid, dry particulate, fuel, scent, defoamer, marker, polish, treatment, wax, etc., as appropriate.

While most of the above examples have a removable tank, in an alternative embodiment, the tank may be permanent. The term "coupling" means the family of mechanisms for readily mounting one thing to another, including reversible types of couplings such as snaps, catches, latches, hooks, click-lock, detent-lock, screw-in, bayonet, Velcro, and the like. It also includes the use of gravity and guides to hold an upper part on a lower part, or tightly-fitting compatible elastomer parts. The modifier "readily detached" generally distinguish such semi-permanent coupling (permanent other than for repair, e.g., screws or bolt) from permanent couplings such as glue/welds. Semi-permanent or permanent couplings could be more practical in the case of a larger robot that is emptied by a dock or floor station (the above embodiments may include a compatible dock or floor station).

As noted above, the platform may also accommodate a spray, spreader, nozzle, capillary action, wipe-on cloth or other fluid dispensing mechanism for dispensing a fluid, and/or a brush, vacuum, squeegee, wipe-off or other cloth fluid collecting mechanism for collecting waste fluid. As used above, "made wet by the fluid" can occur before or after the fluid is stored by a tank (e.g., the fluid can be manually applied by a person and picked up by the robot, or fluid can be left on the surface by the robot to dry or evaporate, depending on the type of fluid, e.g., for polishes or floor treatments). Either or both housings may be substantially monocoque or may include a chassis portion or lock to an added chassis portion.

In cases where a pivot holder is used, the pivot holder is metal, and has durability and stiffness. The use of a heavy metal pivot can increase the weight of the robot (thus pressure and mopping force) and more significantly shift the center of gravity of the main housing to the front or rear (as necessary, depending where the metal pivot is positioned). If a metal handle is used at an opposite end of the robot, then the two metal parts can facilitate balancing and positioning of the center of gravity as desired. However, balancing and positioning can be instead facilitated by the use of a metal supportive frame that shifts the center of gravity of the robot toward the wheel/belt drive contact line, or simply by a heavy weight (e.g., cast iron) placed appropriately to shift the center of gravity of the fluid-full robot to the wheel/belt drive contact line.

For robots designed for coverage (including cleaning robots), it is best to place differential drive wheels on the diameter to permit the robot to turn in place. However, it is advantageous to place the working width or cleaning head on the diameter of a circular robot, as this will give the widest working swath. For certain vacuuming robots manufactured by iRobot Corporation under the trademark ROOMBA, because a side brush can be used when following walls to bring particulates within the working width, the wheels are placed on the diameter of the circular perimeter for this purpose. If the robot follows walls on the same side every time, only one side brush is needed.

However, for a mopping robot that applies liquid, the side brush is not as effective. While the present invention contemplates the use of a dry or wet side brush substantially physically similar to that of a thy-type vacuum to assist dry cleaning or wet cleaning or both, it is not believed to be necessary. Additionally, placing the cleaning head on the diameter of the circular perimeter so that the width of the cleaning head can come nearest the wall helps provide effective cleaning. In the case of another curve of constant width, the cleaning head could be placed on the widest span, and differential drive wheels arranged close to the diameter of a circumcircle enclosing the robot perimeter (alternatively, such a robot could use a holonomic drive with equiangularly arranged omnidirectional wheels).

When the cleaning head is on the diameter of the circular perimeter, it may abut the edge of the robot, thus improving edge cleaning performance. Additionally, if the robot is controlled and configured to always follow walls and obstacles on one dominant side, then the cleaning head need only abut one edge of the robot. Such an arrangement allows space on the non-dominant side to be used for other purposes. In the case of one embodiment of the robot, this on-diameter edge space is used for a gear train and engagement structure to enable the cleaning head to be slip-engaged in cartridge fashion from one lateral side of the robot (from the edge cleaning/dominant side), see FIGS. **3**, **3**B.

The cleaning system of one specific embodiment is dry pick up, followed by fluid (wet) application, followed by fluid

pick up. The reason for the dry pick up to precede fluid application, as described herein, is primarily so that the wet pick-up is primarily of grey water/waste fluid, and not of particulates and large loose debris, which have various negative effects on wet pick-up and can usually be more easily picked up when dry.

Additional cleaning steps may be incorporated into a wet cleaning robot in accordance with the present invention. For example, a dry material application step may be included after the dry pick up step, e.g., a step in which an abrasive powder, catalyst, reactant, etc., or other dry material is deposited and mixes with fluid (or the wet spray is turned off and the dry material is collected or is left for later pickup).

It would also be possible to remove the dry pick up step in the case where another countermeasure is adopted to deal with the possibility of wet particulates or debris, e.g., where a wet pick up mechanism accommodates such debris. One embodiment of the device may use a scrubbing brush that precedes a lateral-strip wet vacuum/squeegee along the cleaning path. As one example, in an alternative embodiment where a scrubbing brush is placed to rotate within the mouth of a vacuum and directs debris to the mouth of the vacuum, the dry pick up step may be less important. It would also be possible to change the cleaning system such that the fluid application process does not immediately precede the fluid pick up process. As one example, in an alternative embodiment a first robot would apply fluid and a second robot would pick up the fluid, or a single robot could be configured to apply fluid in one pass and remove fluid in a second pass along the same path.

It would also be possible to change the cleaning system such that the fluid pick up process is not carried out, for example in the case of a wax or polish. In another embodiment, the robot could apply one kind of fluid (e.g., a cleaning fluid), pick it up, and apply a second kind of fluid (e.g., a wax or polish) that is not picked up.

It would also be possible to change the cleaning system such that the fluid application process applies fluid to a brush, roller, belt, web, pad, or other scrubbing medium rather than directly to the floor, and the fluid first contacts the floor primarily as it is carried there by the scrubbing medium.

As described herein, certain new cleaning systems are particularly well suited to the robotic cleaner of the invention. However, no part of the process or system is critical, notwithstanding that there are certain combinations of cleaning processes that form cleaning systems that has distinct advantages as set forth herein. Many of the robotic, form, and configuration structures set forth herein are new and advantageous for any wet cleaning system (as only one example, the structures associated with a wet cleaning head that extends to one side edge only, where the robot always cleans on that side).

As discussed herein, the robot is preferably from about 3-5 kg when completely filled with fluid. For household use, the robot may be as much as about 10 kg. Exemplary ranges for physical dimensions of the robot are a full mass of about 2-10 kg; a cleaning width of about 10 cm-40 cm within a diameter of about 20-50 cm; a wheel diameter about 3 cm-20 cm; drive wheel contact line about 2 cm-10 cm for all drive wheels (two, three, four drive wheels); drive wheel contact patch for all wheels about 2 cm^2 or higher. An exemplary robot is less than approximately 4 kg empty, and less than approximately 5 kg full, and carries approximately 1 kg (or 800-1200 ml) of clean or dirty fluid (in the case where the robot applies fluid as well as picking it up). The waste tank is sized according to the efficiency of the pick-up process. For example, with a comparatively inefficient squeegee designed to or arranged to leave a predetermined amount of wet fluid on each pass (e.g., so that the cleaning fluid can dwell and progressively work on stains or dried food patches), the waste tank may be designed to be equal in size or smaller than the clean tank. A portion of the deposited fluid may never be picked up, and another portion may evaporate before it can be picked up. In the case where a dry pick up precedes the wet pick up, and an efficient squeegee is used (e.g., silicone), then it may be necessary to size the waste tank to be equal to or bigger than the clean fluid tank. A proportion of the tank volume, e.g., about 5% or higher, may also be devoted to foam accommodation or control, which can increase the size of the waste tank.

A viable autonomous hard surface cleaning robot is under about 10 kg mass, and has at least one scrubbing or wiping member. In order to effectively brush, wipe, or scrub the surface, the scrubbing or wiping member creates drag, and for a robot under 10 kg, should create an average drag of up to about 40% of weight, but preferably less than about 25%. Drag forces (total drag associated with any blades, squeegees, dragging components) should not exceed about 25% of robot weight to ensure good mobility in the absence of active suspensions/constant weight systems, as any lifting obstacle will otherwise remove weight from the tires and effect motive force. Maximum available traction typically is no more than about 40% of robot weight on slick surfaces with a surfactant based (low surface tension) cleaning fluid, perhaps as high as about 50% in best case situations, and traction/thrust must exceed drag/parasitic forces. However, in order to successfully navigate autonomously, to have sufficient thrust to overcome minor hazards and obstacles, to climb thresholds which may encounter the scrubbing or brushing member differently from the wheels, and to escape from jams and other panic circumstances, the robot should have a thrust/traction, provided mostly by the driven wheels, of about 150% or more of average drag/parasitic force. A rotating brush, depending on the direction of rotation, can create drag or thrust, the invention contemplates both. One example of a robot disclosed herein in detail, having a weight of about 8½ lbs, with less than 2 to 3½ lb drag caused by brushes, wipers, squeegees, and idle wheel friction, but more than 3 to 5½ lb thrust contributed either by drive wheels alone or by drive wheels in combination with a forwardly rotating brush, would be an example of a robot that may successfully clean and navigate autonomously. Sometimes weight must be added to improve traction by putting more weight on the wheels (e.g., metal handle, clevis-like pivot mount, larger motor than needed, and/or ballast in one embodiment of the present device). With or without added weight, one embodiment of the present device derives a functional percentage of thrust from a forwardly rotating brush (which is turned off generally in reverse), which is not a feature needed in a large industrial cleaner.

The width of the cleaning head for the mass of the household cleaning robot, under 10 kg (or even under 20 kg), is remarkably different from industrial self-propelled cleaners. According to the embodiments of the invention, this is from 1 cm of (wet) cleaning width for every 1 kg of robot mass, ideally about 5 or 6 cm of cleaning width for every kg of robot mass, and up to 10 cm of cleaning width for every kg of robot mass (the higher ratios generally apply to lower masses). It is difficult to apply sufficient wiping or scrubbing force with more than 10 cm of cleaning width for every kg of robot mass; and less than 1 cm for every 1 kg of robot mass leads to either an ineffective cleaning width or a very heavy robot unsuitable for consumer use, i.e., that cannot be carried easily by an ordinary (or frail) person. Self-propelled industrial cleaning machines typically will be have 1-3 cm of cleaning width or less per kg machine mass.

The ratios of these dimensions or properties may implicate whether a robot under 10 kg, and in some cases under 20 kg, will be effective for general household use. Although some such ratios are described explicitly above, certain ratios (e.g., cm squared area of wheel contact per lb of robot weight, cm of wheel contact line per lb of drag, and the like) are expressly considered to be inherently disclosed herein, albeit limited to the set of different robot configurations discussed herein.

Although the present disclosure discusses in detail the best material configuration and geometry for tires or tracks for a robot useful on wet household surfaces, certain combinations of other cleaner elements with these materials and tire geometry are particularly effective. As for the tires themselves, as discussed, one advantageous configuration would be a 3 mm foam tire thickness with 2 mm deep sipes. This configuration adequately performs when supporting no more than 3 to 4 kg per tire. The ideal combination of sipes, cell structure and absorbency for a tire is affected by robot weight.

At least one passive wiper or squeegee is advantageous on the wet cleaning robot. For example, a wet vacuum portion should be closely followed by a squeegee to build up the thickness of a deposited water film for pick-up. A trailing (wet) squeegee should have sufficient flexibility and range of motion to clear any obstacle taller than 2 mm, but ideally to clear the ground clearance of the robot (in the case of the embodiment detailed herein, the 4½ mm minimum height or ground clearance of the robot).

Any reactionary force exhibited by the squeegee that is directionally opposite to gravity, subtracts from available traction and should not to exceed about 20% of robot weight, ideally no more than about 10% of robot weight. A certain amount of edge pressure, which has an equal reactionary force, is necessary for the squeegee to wipe and collect fluid. In order to obtain an effective combination of fluid collection, reactionary force, wear, and flexible response to obstacles, the physical parameters of the squeegee should be well controlled and balanced. It is noted that a working edge radius of about 3/10 mm for a squeegee less than about 300 mm is particularly effective, and squeegees of from about 1/10 to 5/10 mm working edge can be expected to be viable depending upon other accommodations made. Wear, squeegee performance, and drag force are improved with a squeegee of substantially rectangular cross section (optionally trapezoidal) and/or about 1 mm (optionally about ½ mm to 1½ mm) thickness, about 90 degree corners (optionally about 60 to 120 degrees), parallel to the floor within about ½ mm over its working length (optionally within up to about ¾ mm), and straight to within about 1/500 mm per unit length (optionally within up to about 1/100), with a working edge equal to or less than about 3/10 mm as noted above. Deviations from the above parameters require greater edge pressure (force opposite to gravity) to compensate, thus decreasing available traction.

Three exemplary wet vacuum/squeegee assemblies are disclosed herein, one of which uses a "split squeegee," where wet pickup is primarily provided by a vacuum channel between a forward wet squeegee and a rear wet squeegee, and the two squeegees are separated members that can slide relative to one another as the squeegee is deformed during use. As depicted in FIG. **12** herein, the rear wet squeegee to the left of the drawing would separate from the front wet squeegee adjacent the brush when the cartridge is opened for cleaning. The forward wet squeegee is crenellated on an inside surface to provide a series of vacuum channels, and the primary task of the forward wet squeegee is to appropriately deform to maintain the vacuum within the channels and to deliver the forward ends of the channels to the floor. The forward wet squeegee (of a split squeegee design), maintains a constant open cross-sectional area to define the aerodynamic parameters relative to the trailing wet squeegee. However, in order to accomplish this, the forward wet squeegee need only contact the floor at designated locations and does not require edge pressure to be functional. The forward wet squeegee must be able to clear obstacles at the ground clearance of the robot, e.g., to clear any obstacle over about 4½ mm minimum height of robot for a 4½ mm rear or wet ground clearance. The forward wet should maintains aerodynamic cross sectional areas at about 80-120%, ideally at about 90-110%, of design point (e.g., the projected cross sectional area in a static design) at any location along its length. Deviation of the cross sectional area results in inconsistent vacuum assist for the squeegee and reduces cleaning performance.

When a squeegee is used with or behind a dry vacuum, the dry-vac squeegee must have sufficient flexibility and range of motion to clear any obstacle taller than the forward ground clearance, i.e., for example to clear any obstacle taller than a about 6½ mm height of a forward (dry) half of the robot (in this example, the forward height may be higher or lower). Because the primary purpose of the "dry squeegee" or "doctor blade" is as an air flow guide, and not as a true doctor blade or squeegee, despite the use of the terminology "dry squeegee" or "doctor blade" herein, the end of the dry squeegee can be optionally designed to be separate from the floor by, for example, 0 to about 1 mm, ideally ½ mm. Edge pressure is not necessarily required for the dry vacuum squeegee, i.e., air flow guide blade, to function properly for optimum performance. An ideal air flow guide blade can pivot fore and aft by about 10-30 degrees, ideally 20 degrees.

When brushes or wipers are used, both static and rotational brushes or wipers must contact the floor over a broad range of surface variations (e.g., in wet cleaning scenarios, including tiled, flat, wood, deep grout floors). This contact is accomplished according to the invention generally one or both of two ways: the brush or wiper is mounted using a floating mount (e.g., on springs, elastomers, guides, or the like); and/or adequate flexibility for the designed amount of interference or engagement of the scrubbing brush or wiper to the surface. As noted above, any reactionary force exhibited by the brushes/scrubbing apparatus that is opposite to gravity subtracts from available traction and should not exceed about 10% of robot weight. Helix designs of spinning brushes help to minimize forces opposite to gravity and reduce energy requirements for rotation.

Most of the embodiments described herein, where using a rotational brush, use a single brush. More than one brush may be provided, e.g., two counter-rotating brushes with one brush on either fore-aft side of the center line of a robot, or more. A differential rotation brush may also be employed. In such a case, two brushes, each substantially half the width of the robot at the diameter of rotation, are placed on either lateral side of the spin/rotation center line, each extending along half of the diameter. Each brush is connected to a separate drive and motor, and may rotate in opposite directions or in the same direction or in the same direction, at different speeds in either direction, which would provide rotational and translational impetus for the robot.

A cleaning robot according to one embodiment of the invention is also provided with a suspension system, primarily including a pivoted wheel assembly including resilience and/or damping, having a ride height designed considering up and down force. The ideal suspension is capable of delivering ideally within about 2% (optionally 1-5%) of the minimum downward force of the robot (i.e., robot mass ore weight minus upward forces from the resilient or compliant contacting members such as brushes/squeegees, etc). That is, the

suspension is resting against "hard stops" with only about 2% of the available downward force applied (spring stops having the other 98%, optionally 95%-99%), such that any almost any obstacle or perturbation capable of generating an upward force will result in the suspension lifting or floating the robot over the obstacle while maintaining maximum available force on the tire contact patch. This spring force (and in corollary, robot traction) can be maximized by having an active system that varies its force relative to the changing robot payload (relative clean and dirty tank level). Active suspension would be provided by electrical actuators or solenoids, fluid power, or the like, with appropriate damping and spring resistance, as understood by those of ordinary skill in the art.

The center of gravity of the robot will tend to move during recovery of fluids unless the cleaner and waste tanks are balanced to continually maintain the same center of gravity location. If a fluid recovery system that is capable of recovering nearly all of the fluid put down regardless of the surface, or modeling predicts how much fluid will be recovered into the waste tank, maintaining the same center of gravity location (by tank compartment design) can allow a passive suspension system to deliver the maximum available traction. The present invention contemplates a tank design that includes a first compartment having a profile that substantially maintains the position of the compartment center of gravity as it empties, and a second compartment having a profile that substantially maintains the position of the compartment center of gravity as it fills, wherein the center of gravity of the combined tanks is maintained substantially within the wheel diameter and over the wheels. This is more readily achieved with tanks that are at least partially stacked in the vertical direction.

While the cleaning tanks as configured are integral, the invention contemplates the use of cleaning fluid cartridges. The user would insert a sealed plastic cartridge into a depression or cavity on the robot housing, the cartridge smoothly or substantially smoothly (perhaps slightly raised) completing the top and/or side outer profile of the robot, and preferably being configured to contain a pre-measured amount of cleaning fluid. Securing the cartridge into the robot would pierce or crack the cartridge housing, allowing the cleaning fluid to mix with the water in the correct amount.

As noted above, absent perfect fluid recovery or active suspension, superior mobility can be achieved either by modeling or assuming a minimum percentage of fluid recovered across all surfaces (70% of fluid put down, for example) and designing the profile of the compartments and center of gravity positions according to this assumption/model. In the alternative, or in addition, setting spring force equal to the maximum unladen (empty tank) condition can contribute to superior traction and mobility. As a rule, suspension travel should at least equal the maximum obstacle allowed by the bumper (and other edge barriers) to travel under the robot.

Maximizing the diameter of wheel decreases the energy and traction requirements for a given obstacle or depression. Maximum designed obstacle climbing capability should be about 10% of wheel diameter or less. A 4.5 mm obstacle or depression should be overcome by a 45 mm diameter wheel. In most embodiments described herein, the robot is short and squat for several reasons. The bumper is set low to distinguish between carpet, thresholds and hard floors, such that a bumper about 3 mm from the ground will prevent the robot from mounting most carpets (about 2-5 mm bumper ground clearance). The remainder of the robot working surface, e.g., the dry vacuum and wet cleaning head under the robot, also have members extending toward the floor (air guides, squeegees, brushes) that are made more effective by a lower ground clearance. Because the ground clearance of one embodiment is between 3-6 mm, the wheels need only be 30 mm-60 mm. However, larger is typically better, even when lower obstacles are addressed.

As shown in the various FIGS., at the bottom of the front bumper **220** are crenellations, in this case thin lateral tabs set at intervals along the length of the front bumper. These tabs act as a mechanical carpet detector subsidiary to the main collision or obstacle detection of bumper **220**, being members protruding toward a height at which carpet would pass under the robot before the front wheel climbs the carpet, set at about 3 mm from the floor about the lower periphery of the front bumper, and capable of actuating the front bumper. The tabs extend below the front edge of the front bumper. In addition, inner cover **200***a* of the robot, necessary to shield the interior of the robot when the tank assembly is removed, provides additional stiffness, reducing the requirements on the chassis **200** (lower part **200***b*).

Robot Controller (Circuit) and Control

In accordance with at least one embodiment, the robot may include a generally circular or round chassis **200** (see FIG. **3**, for one example), to which at least first and second drive wheels **1100** may be rotatably connected. The drive wheels **1100** may be positioned on a bottom portion of the chassis **200**, so as to bear the robot across the cleaning surface when the drive wheels **1100** are driven. Further, the drive wheels **1100** may be positioned such that the respective centers of each drive wheel **1100** lie along a virtual line that is generally parallel to the plane of the cleaning surface, for example. Various control sequences for the robot of the present invention and its components are described herein. Additionally, the robot may navigate through a working environment using various control and navigational systems known in the art, including, but not limited to those disclosed in U.S. application Ser. Nos. 11/176,048, 10/453,202, and 11/166,986; U.S. Provisional Application Ser. No. 60/741,442, filed on Dec. 2, 2005, entitled "Robot Networking, Theming, and Communication System," by Campbell et al.; and U.S. Pat. No. 6,594,844; the entire disclosures of which are herein incorporated by reference in their entireties

In one embodiment, the virtual line may extend through a center point of the circular chassis **200** of the robot, and the drive wheels **1100**—which include a left drive wheel and a right drive wheel—may each be positioned at a mutually opposite outer edge of the chassis **200**. The drive wheels **1100** may then be driven simultaneously in a forward-spinning direction so as to propel the robot over the cleaning surface; also, the drive wheels may be driven differentially, with one of the drive wheels **1100** being driven to spin more rapidly than the other, such that the yaw of the chassis **200** rotates about its center point. As a result, the robot can maneuver even where there is no headroom, because the differentially driven drive wheels **1100** can rotate the chassis **200** of the robot without having to simultaneously propel the robot forward or backward with respect to the cleaning surface (this may be accomplished by driving each drive wheel **1100** at the same rate of spin, but in mutually opposite directions, for example).

In accordance with another embodiment, the robot chassis **200** may include a scrubbing module **600** (see FIG. **12**A, for example), which has a generally linear shape and which may extend from a first point along an outer circumferential edge of the circular chassis **200**, through the center point, and to a second point along the outer circumferential edge of the circular chassis **200** (thereby generally defining a central bisecting line through the center of the circular chassis **200**, for example). In such an embodiment, both drive wheels **1100** are positioned on the bottom portion of the chassis **200** on either

the fore or the aft side of the scrubbing module **600**, and in certain embodiments, to the aft of the scrubbing module **600** so as to contribute to the navigational stability of the robot, for example. Other drive wheel locations are possible. As one example, a robot having 4 drive wheels, one forward and aft of the cleaning head on either side of the robot, and with 3 drive wheels—on the right side one forward and one aft of the cleaning head, and on the left the wheel positioned on the diameter to the left of the cleaning head. Such configurations could give the robot movement more similar to a robot having differential drive on the center line, and facilitate software optimizations for controlling movement of the robot, among other things.

In accordance with one embodiment, the mobile robot **100** may clean a floor or other cleaning surface using a generally spiral path, for example. By choosing a spiral path in accordance with an effective width of the liquid applicator **700**, for example, the robot can effectively deposit cleaning fluid over a maximal area of the cleaning surface. In such a case, a robot with a dominant side turns away from the dominant side, in order to have the dominant side (i.e. a side upon which the cleaning head extends to the edge, and upon which the robot follows obstacles) form the outside of the spiral. For a simple spiral, this can leave a spot that is uncleaned, e.g., where the cleaning head is offset to the right and the robot spirals to the left, the robot-bottom portion with no cleaning head coverage creates a small uncleaned circle in the center of the spiral (although this circle is temporary given that the robot will probably return randomly to the same spot before the end of the cleaning cycle). This can be addressed by following the spiral with a center pass based on dead reckoning, or by following the spiral with one or two figure-eights based on dead reckoning. However, in the case where the robot encounters a wall or obstacle before the spiraling method is to initiate the center pass, there remains some probability that this interruption will leave the uncleaned circle (reversing the direction of the spiral from the obstacle or arbitrarily may be used to reach the circle spot as well).

As an alternative coverage pattern which does not necessarily create such spot is shown in FIG. **46**. In such a pattern the mobile robot **100** may follow an overlapping pattern similar to that used by ice resurfacing machines used on skating rinks, in order to ensure that all the areas within the path are properly covered. FIG. **46** shows the general wheel path in dotted lines **911**, and the general coverage path in solid lines **913**. The pattern is most simply a series of circles or ovals that overlap one another, with the diameter of the path followed being larger than the width of the coverage track. It may be implemented as a series of overlapping rounded-corner squares or rectangles, rectangles shown in FIG. **46**. As shown in FIG. **46**, an exemplary pattern uses essentially right-angle differentially steered turns. The robot travels a distance away from a first track, turns parallel to it, travels parallel to it, then turns back to the first track, eventually turning before the first track to overlap it and drive parallel along the first track. The overlap is sufficient to cover any "blank spots" caused by the offset cleaning head or offset differential wheels. The robot then turns at essentially a similar position to the first turn, and repeats this process treating the track just made as the first track. Successively, although the robot leaves a blank, uncleaned area in the middle at the initiation of the coverage pattern, the robot will shift the overlapping oval, circle, square, or rectangle such that the blank area is eventually covered. As can be seen in FIG. **46**, the diameter of or distance across the first loop and subsequent loops of the pattern can be any size, as the robot will overlap the coverage eventually. Larger loops also have greater cleaning efficiency if they incorporate many straight lines. However, if the loops are too large, drift error accumulates, obstacles may be encountered disrupting the pattern, etc. If the loops are too small, then too much time is spent in differential turns, during which cleaning is not as satisfactory as straight cruising, and which is slower than straight cruising as well. In the present case, the coverage pattern described above is of a size that will completely cover the center of the loop on the third to fifth parallel pass (parallel whether the loop shape is irregular, circular, oval, square, or rectangular), and overlaps by no more than half of the cleaning width on each pass. One exemplary tight coverage pattern overlaps by about 120%-200% of the straight line distance from the wheel center to the cleaning head edge (or in the alternative has loops offset by the cleaning width minus about 120%-200% of this distance, or alternatively simply overlaps by about ⅕-⅓ of cleaning head width, or alternatively has loops offset by about ⅔-⅘ of cleaning head width), and has loops that are less than about three or four times the working diameter. These loops are substantially symmetrical, either circles, polygons, squares (the latter two with curved corners as the robot turns).

FIG. **48** illustrates a mobile robot having left and right drive wheels **1100** positioned on the aft bottom portion of the chassis **200**, in which a dotted line indicates the virtual line extending through the centers of both drive wheels **1100**. Because the virtual line of the "diameter-offset" robot does not pass through the center point of the chassis **200** (which is different from the on-diameter robot shown in FIG. **47**, for example), however, the differential yaw control effected by differentially driving the left and right drive wheels **1100** is different from the embodiments in which the virtual line passes through the center point of the chassis **200**. For example, in contrast to the center point-intersecting example, the robot illustrated in FIG. **49** necessarily undergoes simultaneous forward or backward motion by the robot with respect to the cleaning surface, when the yaw of the robot is altered by differentially driving the drive wheels **1100**. Accordingly, the control of the diameter-offset robot (herein "offset robot") for various tasks such as sharp turning, proceeding along curved paths, cliff-following, bump-follow behaviors or other such behaviors is altered from the non-diameter-offset robot, taking into account the differences caused by the offset of the drive wheels **1100** from the diameter (i.e., the centrally bisecting virtual line) of the chassis **200**. Several exemplary offset robot behaviors, which the robot's controller can implement to control the robot accordingly, are discussed below.

The robot may include a bump follow behavior. The bump follow behavior facilitates the escape of the offset robot from a narrow or partially enclosed area (such as an alcove or narrow end of a hallway, for example). The bump follow behavior may include at least two phases: (1) Turning in place (i.e., adjusting the yaw of the robot) when a bumper (or other suitable contact or pressure sensor for detecting contact of the robot with an obstacle, such as a leaf-spring switch, magnetic proximity switch, or the like) is compressed, and (2) moving in a generally arc-shaped path in the opposite direction of the turn with a decreasing radius until the bumper is compressed again.

In accordance with at least one exemplary implementation, phase 1 of the algorithm modifies the radius of turn to keep the bumper against the wall while turning (see FIG. **49**). L1 is a virtual line that extends through the centers of the drive wheels **1100**, and the robot can rotate about any point on this line. L2 is a virtual line that is perpendicular to the wall and passes through the center of the robot (point C). Point A is the intersection of L1 and L2. In accordance with this algorithm,

for example, the robot may maintain a constant distance 'd' between the robot and the wall.

To turn the robot while keeping '4:1' constant, the robot adjusts the respective wheel velocities for the first and second drive wheels **1100** such that the robot rotates about point A. This can be a continuous process such that point A moves with respect to the cleaning surface, as the robot rotates.

Referring to FIG. **50**, for example, the controller implements an algorithm based on control cycles in order to effect the proper behavior. At an initial step S**101**, the robot waits for a control cycle, after which the robot recalculates the estimated position of point A at step S**102**. Subsequently, the robot sets the respective spinning speed for each drive wheel **1100** at step S**103**, in accordance with the recalculated position of A; then, the process repeats at the first step S**101**.

In accordance with embodiments in which the robot may not have a sensor that indicates what angle the wall is relative to the robot, the control algorithm may estimate the position of point A based on which bumper switch is closed (left, right, or both) and may update its estimate as the bumper switch closure state changes. Accordingly, this estimation may allow the bump follow escape behavior to work well most of the time.

With reference to FIGS. **51** and **52**, an exemplary estimation process is illustrated, in which the term 'bump quadrant' refers to which bump switches are closed—'left' means only the left switch is closed, 'right' means only the right switch, and 'both' means that both the left and right switches are closed. FIG. **51** illustrates an example of a continuous algorithm that updates the wall angle every control cycle, and FIG. **52** illustrates how the estimate is updated when the wall quadrant changes.

For example, as illustrated in FIG. **51**, at an initial step S**201**, the robot forms an initial estimate of the wall angle based on the bump quadrant, then waits for a subsequent control cycle at S**202**. Once the control cycle begins, the robot determines at S**203** whether the currently-detected bump quadrant is different from the previous bump quadrant, and if so, reestimates the wall angle based on the previous bump quadrant and the current bump quadrant at S**205**, and returns to S**202** to wait for a subsequent control cycle (thereby forming a process loop). If, however, the current and previous bump quadrants are the same, the robot estimates at S**204** the wall angle based on wheel movements during the control cycle instead of differences in bump quadrants, and then returns to the control cycle waiting step S**202**, as well.

As shown in FIG. **52**, the process proceeds along a first series of linked test steps (S**301**, S**307**, S**312**, S**317** and S**319**), including determining whether the previous bump quadrant was left, both, or right; or, whether the current quadrant is left or right. If none of the determinations in this initial series of linked test steps are 'yes,' then the robot reaches a default estimation for the wall angle of 0 degrees at S**321**. However, if on the other hand the robot determines that the previous bump quadrant was left, then the robot next determines at S**302** whether the current bump quadrant is both (in which case, the robot estimates the wall angle as 7.5 degrees at S**305**), at S**303** whether the current bump quadrant is right (in which case, the robot estimates the wall angle as 0 degrees at S**306**), or otherwise, defaults the estimate to 0 degrees at S**304**. If, on the other hand, the previous bump quadrant was instead both as determined at S**307**, then the process estimates the wall angle as 7.5 degrees at S**310** if the current bump quadrant is determined as left at S**308**, or −7.5 degrees at S**311** if the current bump quadrant is right as determined at S**309**; otherwise, the wall angle estimate defaults to 0 degrees at S**304**. Furthermore, if the previous bump quadrant was right as determined at S**312**, then the robot estimates the wall angle as −7.5 degrees at S**315** only if the current bump quadrant is both as determined at S**313**; otherwise, the estimate defaults to 0 degrees (via S**316**, if S**314** determines the bump quadrant as left, or via S**304** otherwise).

On the other hand, if the previous bump quadrant was not left, right, or both—such as may occur on an initial control cycle when no previous bump quadrant has yet been detected—then the robot determines at S**317** whether the current bump quadrant is left (in which case the estimate becomes 30 degrees at S**318**) or right, as determined at S**319** (in which case the estimate becomes −30 degrees at S**320**); otherwise, the estimate for the wall angle defaults to 0 degrees at S**321**.

The robot may also have cliff avoidance and panic spin behaviors. In addition, the robot may use a direction lock algorithm in order to get out of corners and distribute itself throughout a room or other area containing the cleaning surface. This may occasionally result in the robot turning into an obstacle or cliff it just detected. Thus, in order to avoid dropping off a cliff in a situation in which the offset robot turns toward an obstacle or cliff it has just detected in accordance with the direction lock algorithm (which might occur because the offset robot does not rotate about its center without accompanying forward or reverse translational movement with respect to the cleaning surface), the offset robot may back up a further distance (for example, about 10 mm, although distances from about 5 mm up to about twice the diameter offset may alternatively be used). Backing up too far could lead to falling off a different cliff which might lie behind the robot, because the robot might not have cliff sensors on the rear of the robot in some embodiments. Further, the robot may also turn a further amount (for a non-limiting example, 20 degrees; or, any angle within 0 through 90 degrees also being suitable, alternatively) when turning towards a detected cliff, compared to a non-offset robot.

FIG. **53** illustrates an exemplary algorithm that an offset robot may employ. At an initial step S**401**, the robot determines a direction of a detected cliff, based on which cliff sensor among at least a right cliff sensor and a left cliff sensor (as non-limiting examples) are triggered—if only the right cliff sensor is triggered, the robot determines the cliff is to the right; if only the left cliff sensor is triggered, then the robot determines that the cliff is to the left; otherwise, the robot instead determines a direction at random. Next, the robot determines at S**402** whether the direction is locked, and whether it is different from the direction of the cliff. If yes, at S**403** the robot backs up (for example, by a particular distance, such as 10 mm; alternatively, the distance may be dynamically set in response to other environmental or behavioral factors known to the robot, or by any suitable predetermined amount) and turns (for example, by a particular amount such as 20 degrees; alternatively, the turning amount may be dynamically set, or may be any suitable amount) before again proceeding forward. Otherwise, at S**404** the robot then proceeds according to the usual cliff avoidance behavior.

The panic spin behavior is used to escape when robot determines that it may be stuck on an obstruction. In embodiments in which the robot is an offset robot, and is unable to rotate in place about its center without necessarily simultaneously moving forward or backward, and thus place the offset robot in danger of going over a cliff, the offset robot may reverse its panic spin direction if it encounters a cliff during the behavior.

As shown in FIG. **54**, for example, in accordance with one example of a panic spin behavior for an offset robot, the robot

may randomly choose a rotational direction and magnitude in which to turn about its center, at a first step S**501**. The robot then may begin its spin at S**502**, and then wait for the next control cycle at S**503**. Subsequently, the robot may set its speed based on the chosen turn angle at S**504**, and then test whether or not a cliff has been detected at S**505**. If so, the robot then reverses its spin direction at S**506**, and the control process then loops back to S**503** to wait for a subsequent control cycle; otherwise, the control process simply loops back to S**503** to wait for the subsequent control cycle, without reversing the spin direction.

The robot may have a bounce behavior for handling low traction. The robot may operate in environments in which the floor or other cleaning surface is wet, and there may be other elements or protrusions on the bottom of the robot chassis that may contact the floor and reduce wheel contact force. To handle this, when the bumper is triggered, the bounce behavior for the robot may generally back up at least about 10 mm (or any other suitable distance), and then stop backing up when it has either backed up a further 20 mm (or other suitable distance) or the bumper has released. In contrast to conventional robots, a robot in accordance with this embodiment may back up a minimum amount before scanning to determine whether the bumper is released. The total distance may also be kept to a minimum to avoid inadvertently backing off a cliff, but enough that the robot can turn.

The robot may also include a wheel drop behavior for detecting floor transitions and drops, as well as gradually sloping obstacles or objects which might not otherwise be detected by bumpers or other obstacle detection sensors. For example, if the front of the robot rides up on a shallow transition in the floor, or when the front of the robot is lifted by a gradual rise or object on the cleaning surface that does not alert the robot to its presence by triggering a bumper or other sensor, the front wheels **1100** of the robot may drop down and thus lose contact with the surface. Accordingly, the robot may include a sensor which triggers when the wheel of the robot drops to its lowest position (or any other lower-than-normal point suitable to indicate a likely loss of contact). Thus, when the front wheel drops, the robot may then react to a triggering of the wheel drop sensor in a manner similar to a bumper hit. As a non-limiting example, if, after backing a short distance, the wheel does not return (for example, the wheel drop sensor fails to cease to trigger), the robot may then stop (and, for example, alert the user with a wheel drop error code, alarm, or other indication) for safety reasons. By reacting to a wheel drop condition as a bump, for example, the robot may avoid going up onto carpets or other undesired floor surfaces or obstacles.

FIG. **55** shows that upon entering the wheel drop behavior, as a first step S**601**, the robot moves in reverse at S**602** until at S**603** the robot has reached a particular distance (for example, 50 mm), or a particular amount of time has passed (for example, 1 second, or any other suitable amount of time), and/or the wheel drop sensor no longer is triggered (for example, if the wheel drop sensor is a continuous-type sensor rather than a pulse-type or momentary-type sensor). Subsequently, the robot determines at S**604** whether the wheel drop sensor no longer is triggered, and if so, the robot may then enter the bounce behavior mode and/or continue to clean the cleaning surface (alternatively, for example, the robot may simply revert to its normal mode, or any other suitable behavioral mode) at S**605**. If, on the other hand, the wheel drop sensor has not ceased to trigger, the robot may then cease its cleaning behavior (or traveling behavior, as may be the case), and may also issue an alarm, error code, or other "distress" indicator in order to alert the user that the robot is no longer cleaning and has entered a stationary "fail safe" mode at S**606**, as a non-limiting example.

Certain embodiments of the wet cleaning behaviors are described below. In accordance with some embodiments, in which the robot includes components for wet cleaning of the cleaning surface (by including the liquid applicator module **700** and associated elements), the vacuum fan motor may be operating the entire time the robot is cleaning. As a result, any liquid previously deposited on the cleaning surface—for example, cleaning liquid left over from a previous cleaning cycle, or liquid from a beverage spilled on the floor by a person, or any other liquid—may be removed from the cleaning surface; in addition, any liquid or moisture which remains within the robot or on robot components (for example, as a result of wet cleaning operations performed by the robot) may more quickly dry out as a result of air flow drawn over the residual liquid or moisture. Thus the robot may become properly dry more quickly, and the likelihood of undesirable leaking or spilling of liquid from the robot, such as may occur when a still-wet robot is prematurely handled by a user, may be reduced. Further, the brush and pump may be controlled in accordance with the cleaning and mobility characteristics of the robot. Additional robot behaviors related to wet cleaning robots are described below.

The robot drying process may be triggered, for example, by one or more conditions such as, for example, a timer that causes the robot to initiate the drying process at a particular time of day, or after an elapsed period of time during a wet cleaning cycle; or, as in the alternative, in response to a sharp drop off in battery voltage supplied to the robot, which may indicate that the battery will soon not provide sufficient power. As an advantage, for example, the robot may be configured to ensure that it is dry before the power supply from the battery is completely drained.

Embodiments of the main brush control are described below. When the robot is in motion, the main brush may spin in a clockwise direction when viewed from the right hand side of the robot, as illustrated in FIG. **3**, for example. As a result, forward force is contributed to the robot as the clockwise-spinning main brush contacts the cleaning surface or floor, for example, facilitating forward propulsion of the robot with respect to the cleaning surface. Likewise, when backing up, the robot may turn the brush off; and the robot may also leave the brush turned off until it has traveled forward at least, for example, about 25 mm (an alternative suitable distance or time delay may be used, for example, about 0-50 mm) upon resuming forward movement. Alternatively, when the brush can be caused to rotate in a reverse direction (e.g., in a counterclockwise direction, when viewed from the right hand side of the robot) when the robot backs up, in order to provide additional reverse propulsive force, as a non-limiting example.

FIG. **56** illustrates an exemplary brush control process in accordance with such an embodiment. The robot may wait for a next control cycle at S**701** (herein referred to as the "first step," although the behavioral control process may alternatively begin at any suitable point, for example, and is not limited to beginning at this step), and then determines whether or not the robot is backing up at S**702**. If not, then the robot turns on the brush (or leaves the brush on) at S**703**, then returns to the first step S**701**.

On the other hand, if the robot is determined to be backing up, the robot may then turn off its brush at S**704**, then wait for a next control cycle at S**705**; upon the next control cycle, the robot may again determine whether the robot is backing up at S**706**, and if so, the process may sub-loop by returning to the immediately preceding waiting step S**705** and wait again for

a next control cycle. However, if the robot determines that the robot is not backing up at this sub-loop, it may then proceed out of the sub-loop and set a distance counter to an initial state (such as setting an integer value stored in electronic memory to zero, or a count register, or mechanical counter, or other suitable counter, as examples) at S**707**, and then enter another sub-loop by waiting again for a next control cycle at S**708**. Upon the next control cycle, the robot may then increment (or decrement) the distance counter at S**709**, and then determine whether the distance counter has reached or exceeded a threshold value (e.g., 25 mm, or 1 second, or any other suitable threshold) at S**710**.

If the robot determines that the distance counter has not reached or exceeded the threshold value, the robot may reiterate this sub-loop by returning the process to the immediately preceding next-control-cycle waiting step at S**708**, for example. Otherwise, the robot may instead then turn on (or leave on) the brush at S**703**, and return to the first step S**701** in the brush control process.

For embodiments of robots which include wet cleaning capability, a pump may be included which can be controlled to dispense cleaning fluid onto the cleaning surface, for example. In order to effectively distribute cleaning fluid on the floor, the robot may control the output shaft of the pump to a specific rotational speed, including embodiments in which no mechanical speed sensor is included. Also, the robot may turn the pump off under various circumstances while cleaning to avoid putting too much fluid down in one spot, such as, for example, when the robot is not traversing the cleaning surface at an appropriate rate to appropriately disperse the cleaning fluid. In addition, the robot may perform a specific sequence at startup to prime the pump quickly. Further, the pump may be turned off for 5 minutes after cleaning is complete, to properly dry the inside of the robot, although this may be from about 15 seconds-15 minutes depending on the air flow and fluid properties. Other examples of pump control and pump-related behaviors are described below.

In one embodiment, the robot may ascertain the floor area of a room to be cleaned, either by initially traversing and recording the boundaries of the room, or by receiving information from a user or computer. Thereafter, the robot may control the pump in proportion to the ascertained size of the room, in order to ensure that the entire floor (or at least a maximal or optimal area thereof) receives an effective amount of cleaning fluid, for example. As an advantage, cleaning fluid can be conserved and the risk of leaving the floor only partially cleaned may be reduced.

In at least one embodiment, a robot may include a pump which is a reciprocating diaphragm pump having two chambers. The pump is driven by a small DC motor, and the output shaft has an eccentric cam that drives the pump mechanism. The output speed of the pump may be controlled to a particular rotational speed to distribute the correct amount of cleaning fluid. To avoid the cost and potential unreliability of a mechanical sensor, an electrical sensor may be included, as well. When driven with a substantially constant voltage, for example, the current drawn by the pump may be represented by a signal having a period that varies with the output speed of the pump, as illustrated in a non-limiting example in FIG. **57**. By measuring the current of the pump over time and analyzing the resulting data, the speed at which the pump is turning can be determined.

As noted herein, the diaphragm pump distributes water in front of the cleaning head. A single membrane sandwiched between two housing pieces acts as both inlet and outlet check valves and pumping chamber. The pump has two independent circuits which supply two outlet nozzles. The pump is actuated by a cam such that the nozzle output is constant per unit distance squirted. In other words, the cam drives the pump so each nozzle leaves a uniform puddle across the full width of the cleaning brush. The output of each pump channel is directed to nozzles which are positioned directly opposite each other in line with each end of the cleaning brush and in front of the cleaning head. The nozzles squirt water parallel to and in front of the cleaning head. They squirt directly out of phase at the same frequency in an effort to minimize the linear travel distance between output puddles. The reason for two nozzles is to reduce or eliminate any unevenness or inaccuracy apparent in a single nozzle. By having two opposing nozzles, the outputs are averaged, and the cleaning fluid is applied uniformly.

In accordance with at least one embodiment, the robot may analyze data pertaining to the pump speed using a pseudo-autocorrelation algorithm or other suitable algorithm. The current that the pump is drawing may be sampled every control cycle (generally about 67 times per second, or other suitable rate, e.g., from 10-200 times per second) and put into a buffer. The buffer analyzes every control cycle (or other suitable periodic rate) to estimate the period of the signal. The pseudo-autocorrelation algorithm outputs a correlation value for a range of sample periods, from about 194 ms (corresponding to 79 RPM), for example, to about 761 ms (309 RPM) at 15 ms intervals, in accordance with one example noting that the particular values of time, interval, and rate are simply non-limiting examples, which may be substituted with any other suitable values). A correlation value is calculated by summing the absolute value of the difference of a number of samples in the buffer separated by the sample period. A lower correlation value generally indicates a better match.

The pseudo autocorrelation algorithm may sometimes falsely indicate a match even for incorrect frequencies, because it can match on frequencies whose period is a multiple of the correct period, and if the two lobes of the signal are similar in size it may also falsely indicate a match on half the period. To help avoid this problem, an estimate of pump speed may be calculated from the voltage being supplied to the pump and the current being drawn. In accordance with an exemplary embodiment, this may be based on data measured from several sensors to measure the appropriate constants. In accordance with this process, examples of formulas for determining an estimated pump RPM based on voltage and current readings may include, among others:

$$\text{Period_from_voltage}=61-2.5*V;$$

$$\text{Nominal_current}=8.4+3.95*V;$$

$$\text{Slope}=1.3302-0.07502*V;$$

$$\text{Period}=\text{Period_from_voltage}+(I-\text{Nominal_current})*\text{Slope};$$

and

$$\text{RPM}=4020/\text{Period}.$$

Although all of which should be considered to be alternatively +/−5 percent, or up to +/−20 percent, the values have been determined empirically to take into account tolerance variation among pumps and motors.

FIG. **58** illustrates one example of an algorithm used to determine the pump speed. At an initial step S**801**, the robot calculates a correlation value for each period, then at S**802** find the two smallest correlation values which are greater than 50 below the average value. This is an empirically determined

constant and is a non-limiting example. Reasonable values will vary widely depending on actual pump current values, how pump current values are converted to digital values, and the sampling rate. Then, the robot determines whether or not there are no valid correlations at S**803**—if there are none, the process determines that the period is unknown at S**804**; on the other hand, if the determination is not that there are no valid correlations, the process then determines whether or not there is only one correlation at S**805**. If so, the process returns the period of the one valid correlation at S**806**. Otherwise, the process the determines at S**807** whether or not two correlations have periods of three or fewer peaks and if so, then the process returns the period of the smaller correlation at S**808**.

If not, the process determines at S**809** whether the smallest correlation has a value that is smaller by more than 25, in which case the process returns the period of the smaller correlation at S**810**. Just as above, this is an empirically determined constant and is intended only as an example. Otherwise, the process then determines whether the periods are 1.5×, 2×, or 3× multiples at S**811**. If not, the process determines the period as unknown at S**812**; otherwise, the process proceeds to calculate an estimate of the period (the estimate is calculated as described above) at S**813**, and then determines at S**814** whether or not the estimate thus produced is substantially closer to one of the periods—and, if so, the process returns the period closer to the estimate at S**815**; if not, the process returns the smaller period at S**816**.

The robot may include pump disable control as well. In some embodiments, the pump may be stopped in various circumstances to avoid putting water on the floor where the robot will not (or is unable to) pick it up. For example, if the pump were to run (and thus cause cleaning fluid to be deposited) while the robot was backing up, the water that was put down might not get picked up because the part of the robot that picks up fluid is behind the fluid outputs (unless the robot were to re-traverse the area it backed away from).

Conditions in which the pump may be stopped may include, inter alia: (1) when the robot is moving backwards; (2) when the robot is turning in place (for non-offset robot embodiments, or, alternatively, when the robot is turning in a very small area, such as for either offset or non-offset robot embodiments); (3) when the robot is turning about a point closer to the center of rotation than half the wheel spacing; and/or (4) when the robot detects circumstances that are interpreted as a stuck condition.

FIG. **59** depicts an example of a sequence for implementing a stuck behavior for a wet cleaning robot. At a first step S**901** (noting that although this is referred to as the "first step" for explanatory convenience, the process may alternatively begin at any other suitable step in the process) the process sets a "may be stuck" variable or flag (which may be a location in an electronic memory, or a flip-flop, or mechanical switch, or any other suitable structure; herein referred to as "maybe stuck") to a state representing "not stuck" (herein referred to as "false"; the opposite state referred to as "true"). The process then waits for a next control cycle at S**902**, and then determines whether the robot is in a constant bumper panic state (for example, a state in which the bumper triggers continuously) at S**903**, and, if so, the process sets maybe stuck to true at S**904**, waits for the bumper to be cleared for two seconds (e.g., 0.2 to 10 seconds) at S**905**, and then reiterates the stuck behavior process by returning to the first step S**901**. Otherwise, the process determines at S**906** whether any other panic states exist; if so, the process sets maybe stuck to true at S**907**, waits for the bumper, cliff sensor, and/or virtual wall sensor to activate at S**908**, and then returns to the first step S**901**. If not, the process determines at S**909** whether the wheel drop sensor is triggered; if so, the process sets maybe_stuck to true at S**910**, waits for the wheel drop sensor to be clear for two seconds (e.g., 0.2 to 10 seconds) at S**911**, and then returns to the first step. Otherwise, the process sub-loops by returning to S**902** to wait for the next control cycle.

The robot's pump may also require a priming sequence. In embodiments of robots which include a pump, the pump may be run at full voltage for (as a non-limiting example) 2 seconds (or any other suitable interval) at startup, to facilitate priming of the pump.

A drying cycle may also be included in certain embodiments of the cleaning robot. For example, wet cleaning robots may generally continuously vacuum up dirty cleaning fluid (and/or other liquid) from the floor or cleaning surface. The fluid may form a residue along vacuum channels inside the robot. To avoid leakage of the fluid or residue from the robot (which leakage may form a puddle or streak on the cleaning surface) following a cleaning cycle, the robot may run for a period of time (herein referred to as "the drying period") after cleaning is stopped, with the pump turned off and the vacuum running. During the drying period, the vacuum may be maintained on and/or the brush may be kept spinning, to dry the brush and its enclosure. The robot may also move within its environment (for example, in its normal cleaning pattern), to allow the robot to pick up any liquid remaining under the robot that may continue to be pushed around with the robot's squeegee, as well as to avoid potential damage to the floor or cleaning surface that may be caused by spinning the brush in one place.

The robot has additional sensors. In accordance with at least one embodiment, a wet cleaning robot may include one or more sensors such as, for example, a fluid level sensor, a Filter, Cleaning Head, and/or Tank Present Sensor, inter alia. A robot may include, as a non-limiting example, two fluid level sensors—one to sense if there is any clean fluid remaining, and another to sense if the waste fluid tank is full. Each sensor may use the same electronics and driving processes. FIG. **60** illustrates an example electronic circuit, in which R1 and R2 are current limiting resistors (which may have the same value, or, alternatively, differing values).

To get a reading from the sensor, the control process may set Output 1 to +5V, Output 2 to 0V, and read the analog input (Reading 1). It may then reverse the outputs, setting Output 1 to 0V and Output 2 to +5V (other voltage values +3.3, 12, 24 would be suitable for other system voltages). Then, the process may read the analog input again (Reading 2), and subtract the two readings (i.e., subtracting Reading 2 from Reading 1) to obtain, as a result, the voltage across the sense electrodes, herein called the "Sense Voltage." Accordingly, a set of formulas may be used to calculate the resistance across the sense electrodes, such as, for example:

Voltage across $R1$ (or $R2$)=(5 V [from the voltage applied to the pin above]−Sense Voltage)/2;

Current across $R1$ (or $R2$)=(Voltage across $R1$)/$R1$;

and/or

Sense Resistance=(Sense Voltage)/(Current Across $R1$).

Generally, these formulas are effective if R1 and R2 are the same, and different formulas would be required if R1 and R2 are different. When the Sense Resistance is below a threshold, the sensor indicates fluid is bridging the electrodes. As an example, R1 and R2 may be 2K ohms (optionally 300 to 5000 ohms), and the threshold may be 30K ohms (or, alternatively, any other suitable values, e.g., 5K to 80K ohms).

The robot may also include filter, cleaning head, and tank sensors. Each of these components (Filter, Cleaning Head Assembly, and Tank Assembly) may include a magnet. In a corresponding position in the robot, there may be a reed switch that closes in the presence of a sufficiently strong magnetic field (alternatively, a relay-type switch, pressure sensor, optical sensor, or any other appropriate system for detecting the presence of the above-noted components may be used). This allows the control system to check if these components are properly installed. As the filter may be of critical importance, because the vacuum fan would be very easily damaged by foreign material, and because without the cleaning head assembly or the tank, the robot would not clean the floor, the control system may not allow the robot to run if any of these components are missing or go missing during the run, in accordance with at least one embodiment.

To avoid falsely preventing the robot from running when the tank is actually present but the sensor has failed, the control system may allow the robot to clean if the tank present sensor is not working. In accordance with one example, if the tank present sensor was working at the start of the run, and the tank present sensor indicates the tank is removed during the run, the robot may stop.

The user interface for the robot may consist of simply a power button. However, additionally, a cleaning button may be provided. In one example, each of the power button is provided with a light.

As shown in FIG. **62**, in order to provide the user with information regarding the robot's operation, the power button may be used to signify battery charging status, e.g., red for empty, pulsing green for charging (fast or slow for different charging cycles or battery refresh cycle), solid green for fully charged, blinking red for not installed. The clean button may be used to signify cleaning tank status or cleaning operation status, e.g., green for cleaning, blue pulse for drying (clean nearly completed), solid blue tank is empty clean cycles is complete.

Accordingly, in this user interface example, the robot has a battery and a replenishable material tank, and a panel is provided with two illuminable buttons, one of the buttons controlling an on/off or power operation of the robot and being illuminated, optionally in patterns and/or colors, according to the on/off or power status; and the other button initiating a cleaning operation by the robot using the replenishable material tank and being illuminated, optionally in patterns and/or colors, according to the status of the replenishable material in the tank and/or the status of a cleaning cycle and/or drying cycle using the replenishable material in the tank. "Illuminate" essentially means activate, and forms of rendering a warning more visible (change color, turn from light to dark, pop up, and the like) without actual illumination are included. An alternative would use one button and patterns and/or colors to signify power and/or replenishable material status as discussed above. Pressing one or two buttons in combinations (tap, long press, double tap, press both, press one and tap the other) can be used to initiate operations directly, such as starting drying immediately, overriding a sensor failure, or providing access to testing or diagnosis modes.

As shown in FIG. **63**, additional information can be provided with status lights that are important for monitoring autonomous operation. In such a case, the status lights may be illuminable text that directly indicate a problem, along with a color recognized as a warning by most people. If the lights are illuminable text messages, there is no need for the user to refer to a manual to interpret the problem on the robot, yet the robot does not include unnecessary complexity by inclusion of a display panel and associated control elements. In the present case, a warning light that indicates the user should "check tank" should actually use the words "Check Tank", and may illuminate in a "warning" color (e.g., yellow, red, orange) color for a service warning (E.g., the tank is missing) or in a "non-warning" color (e.g., green, blue, purple, white) for a simple status message (e.g., cleaning cycle is complete). In addition or in the alternative, a "Check Brush" and "I'm Stuck" light are useful in the present context. The check brush message may appear when the brush is jammed or improperly installed, e.g., by detecting motor load. The "I'm Stuck" message should appear as a result of the robot's recognition of a stuck or stasis condition, following appropriate panic, anti-canyoning, escape and other anti-stasis (sometimes "ballistic" behaviors) have been cycled or exhausted. One detection would depend upon stasis of the front wheel while either drive wheel turns. A service code 7-segment display element can provide information enabling problems to be diagnosed by the user or by technicians.

Accordingly, in this user interface example, the robot has a powered drive and/or a powered brush and/or and a replenishable material tank, and a panel is provided with warning indicia, capable being illuminated, optionally in patterns and/or colors, according to the status of the robot drive and/or brush and/or replenishable material tank. In certain embodiments, the indicia are actual text messages. Further preferably, the illumination is in warning and non-warning colors according to the circumstances. The replenishable material tank should be able to convey both tank malfunction and tank empty messages. Again, these lights are illuminated optionally in patterns.

Operation and Maintenance

FIGS. **36-41** depict a method for operating and maintaining a cleaning robot physically configured for such operation and maintenance, and also includes information regarding the stacking/assembly order of the parts of the robot and/or the physical configuration dependency of the robot. FIGS. **37-41** depict readily recognized hand positions, motions, and other physical actions, as well as readily recognized orientations, positions, and configurations of a cleaning robot, and the present disclosure includes all that is readily recognized from these drawings.

According to FIGS. **36-41**, an embodiment of the robot is structurally configured to permit a tank to be physically positioned to provide access to an internal area (S**2**), or to permit a cleaning head to be physically removed from the robot body (S**3**). As shown in FIGS. **36-41**, neither depends upon the other, and the cleaning head and tank release may be handled independently. Once the tank is put into a released position (S**2**), the tank may be unloaded (S**4**). However, even without unloading the tank (S**4**), the internal area becomes available, and the user may then access a filter that is made visible and accessible (S**12**), a vacuum port (grommet) that is made visible and accessible (S**14**), and a battery that is made visible and accessible (S**16**). Each of these is more convenient if the tank is unloaded (S**4**), but as the tank does not impede general access to the internal area in the released position, each of S**12**, S**14**, and S**16** may be carried out without unloading the tank. The filter may be flushed and restored (S**20**) after being removed. The battery may be placed and handled differently, e.g., to be inserted in or to the robot body or tank without tank release, the outer surface of the battery substantially conforming to the outer profile of the robot when the battery is in place.

Once the tank is unloaded (S**4**), the dirty tank, if full, may be emptied (S**6**) and flushed (S**18**). However, whether the dirty tank is full or empty, the clean tank may nonetheless be

filled with cleaning fluid (S**8**) or water (S**10**), none of these dependent upon the other. The tank, loaded with mixed cleaning fluid and water (or as noted herein, premixed and/or cartridge cleaning fluid and/or water alone), the tank is loaded (S**22**) and then "clicked" in to lock the tank in place (S**24**). The robot may then operate autonomously. These operations may be in whole or in part carried out by a dock or cleaning station of the robot. In such a case, it may be advantageous not to release the tank or unload the tank; rather the fluid areas of the robot, as well as the areas including cleanable parts such as the filter or vacuum port, may be accessed through alternate ports in the compartments of the tank provided for the purpose of automated evacuation of the tank. The present invention contemplates the automated docking and/or evacuation of the tank and/or robot, and incorporates by reference specific description thereof from the documents incorporated by reference herein. In such a case, some or all of the steps of FIG. **36** would be process steps carried out by the processor, manipulators, and mechanisms of the dock or evacuation station in communication with the processor of the robot.

In certain embodiments, the cleaning head release and tank release are made dependent. In such cases, the release for the cleaning head is inside the robot body, and the tank must be in the released position to access the cleaning head, as depicted in the FIGS. When in the down or latched position, the tank locks the cleaning head in place and prevents access to the cleaning head release button. In this configuration, the cleaning head engages the tanks via the vacuum channels that extend from the tank through the robot body into the cleaning head (as depicted in the FIGS.). In such a case, the vertical overlap is beneficial for sealing contact, and pulling the cleaning head sideways against the channels causes wear; thus, the cleaning head may be designed for release only when the tank is released to avoid this wear.

It will also be recognized by those skilled in the art that, while the invention has been described above in terms of preferred embodiments, it is not limited thereto. Various features and aspects of the above described invention may be used individually or jointly. Further, although the invention has been described in the context of its implementation in a particular environment, and for particular applications, e.g. residential floor cleaning, those skilled in the art will recognize that its usefulness is not limited thereto and that the present invention can be beneficially utilized in any number of environments and implementations including but not limited to cleaning any substantially horizontal surface. Accordingly, the claims set forth below should be construed in view of the full breadth and spirit of the invention as disclosed herein.

What is claimed is:

1. A surface treatment robot comprising:

a robot body having a forward portion and a rear portion;

a differential drive system mounted on the robot body and configured to maneuver the robot over a cleaning surface;

a controller in communication with the drive system and configured to differentially steer the robot;

a proximity sensor responsive to an obstacle forward of the robot, wherein the controller is configured to alter a heading setting in response to a signal received from the proximity sensor indicating a potential obstacle;

a cliff sensor responsive to a potential cliff, wherein the controller is configured to alter the heading setting in response to a signal received from the cliff sensor indicating a potential cliff; and

a passive scrubbing element disposed across a cleaning width of about 10 cm to 40 cm such that a shear force is generated between the passive scrubbing element and the cleaning surface as the robot moves over the cleaning surface, wherein an average drag force between the surface treatment robot and the cleaning surface is up to about 40% of the weight of the surface treatment robot and the surface treatment robot has a mass of less than about 10 kg.

2. The surface treatment robot of claim **1**, further comprising a liquid applicator supported on the robot body to distribute cleaning fluid onto the cleaning surface across the cleaning width.

3. The surface treatment robot of claim **2**, wherein the liquid applicator is a spreader brush or a wiper arranged to apply cleaning fluid directly to the cleaning surface.

4. The surface treatment robot of claim **1**, wherein the cleaning width is disposed along a portion of the robot body having a height less than a portion of the robot body away from the cleaning width.

5. The surface treatment robot of claim **4**, wherein the height of the robot body is less than 4 inches and the robot body fits within a diameter of about 20-50 cm.

6. The surface treatment robot of claim **1**, wherein the differential drive system comprises first and second drive wheels disposed rear of the passive scrubbing element as the robot moves in the forward direction.

7. The surface treatment robot of claim **6**, wherein the first and second drive wheels are each disposed rear of a center point of the robot body as the robot moves in the forward direction.

8. The surface treatment robot of claim **6**, wherein the first and second drive wheels are each positioned at an outer edge of the robot body.

9. The surface treatment robot of claim **6**, wherein the first and second drive wheels each support no more than 3 to 4 kg.

10. The surface treatment robot of claim **1**, wherein the differential drive system comprises first and second drive wheels each biased to move toward the cleaning surface when the respective wheel loses contact with the cleaning surface.

11. The surface treatment robot of claim **10**, wherein the cliff sensor is configured to sense the loss of contact between the respective wheel and the cleaning surface.

12. The surface treatment robot of claim **1**, wherein the proximity sensor responsive to the obstacle forward of the robot comprises a displaceable bumper disposed along the forward portion of the robot body.

13. The surface treatment robot of claim **12**, wherein the ground clearance of the displaceable bumper is about 2 mm to 5 mm.

14. The surface treatment robot of claim **1**, wherein the passive scrubbing element is releasably supported across the cleaning width.

15. The surface treatment robot of claim **1**, wherein the passive scrubbing element is configured to agitate a cleaning fluid dispensed on the cleaning surface.

16. The surface treatment robot of claim **15**, further comprising a reservoir defining a volume for storing the cleaning fluid.

17. The surface treatment robot of claim **16**, wherein the reservoir is releasably attachable to the robot body.

18. The surface treatment robot of claim **16**, wherein at least a portion of the reservoir is disposed above the passive scrubbing element as the robot move across the cleaning surface.

19. The surface treatment robot of claim **1**, wherein the passive scrubbing element is a passive scrubbing element including one or more of the following: a scrub brush, wiper, and a wipe cloth.

* * * * *