US008945005B2

(12) United States Patent
Hafezi et al.

(10) Patent No.: US 8,945,005 B2
(45) Date of Patent: Feb. 3, 2015

(54) **CONTROLLED ACTIVATION INGESTIBLE IDENTIFIER**

(75) Inventors: **Hooman Hafezi**, Redwood City, CA (US); **Timothy Robertson**, Belmont, CA (US); **Olivier Colliou**, Los Gatos, CA (US); **Mark Zdeblick**, Portola Valley, CA (US)

(73) Assignee: **Proteus Digital Health, Inc.**, Redwood City, CA (US)

(*) Notice: Subject to any disclaimer, the term of this patent is extended or adjusted under 35 U.S.C. 154(b) by 597 days.

(21) Appl. No.: **12/447,172**

(22) PCT Filed: **Oct. 25, 2007**

(86) PCT No.: **PCT/US2007/082563**

§ 371 (c)(1),
(2), (4) Date: **Apr. 24, 2009**

(87) PCT Pub. No.: **WO2008/052136**

PCT Pub. Date: **May 2, 2008**

(65) **Prior Publication Data**

US 2010/0239616 A1 Sep. 23, 2010

Related U.S. Application Data

(60) Provisional application No. 60/862,925, filed on Oct. 25, 2006.

(51) **Int. Cl.**
A61K 9/00 (2006.01)
A61P 43/00 (2006.01)

(Continued)

(52) **U.S. Cl.**
CPC ***A61K 49/00*** (2013.01); ***H01M 10/0436*** (2013.01); ***A61B 5/6861*** (2013.01);

(Continued)

(58) **Field of Classification Search**
CPC A61B 5/073; A61B 5/4839; A61B 5/4848; A61B 5/6871–5/6873; A61B 5/4238; A61B 5/6861; A61B 2560/0214; A61J 3/002–3/10; H01M 4/02–4/0407; H01M 8/08; H01M 2220/10–2220/30; H01M 2300/0002–2300/0005; H01M 10/0436–10/044; H01M 4/86–4/8663; H01M 8/006
USPC 600/300–301, 363–365, 373–374, 600/377–379, 382–384, 386–394, 481, 485, 600/500–503, 509, 515–519, 529–531, 600/544–547, 549; 128/920–925; 705/2–3; 424/400–502
See application file for complete search history.

(56) **References Cited**

U.S. PATENT DOCUMENTS
3,607,788 A 9/1971 Adolph
3,628,669 A * 12/1971 McKinnis et al. 210/500.21

(Continued)

FOREIGN PATENT DOCUMENTS
CN 1991868 7/2007
CN 101005470 7/2007

(Continued)

OTHER PUBLICATIONS
Hung, L-H et al in "Optimization of Droplet Generation by controlling PDMS surface hydrophibicity", Proceedings of IMECE20042004 ASME International Mechanical Engineering Congress and RD&D Expo, Nov. 13-19, 2004 Anaheim, California, p. 1-2.*

(Continued)

Primary Examiner — William Thomson
Assistant Examiner — Marie Archer
(74) *Attorney, Agent, or Firm* — K&L Gates LLP

(57) **ABSTRACT**
Controlled activation identifiers for use in ingestible compositions, such as pharma-informatics enabled compositions, are provided. The identifiers include a controlled activation element that provides for activation of the identifier in response to the presence of a predetermined stimulus at a target site of interest. The invention finds use in a variety of different applications, including but not limited to, monitoring of therapeutic regimen compliance, tracking the history of pharmaceutical agents, etc.

21 Claims, 10 Drawing Sheets

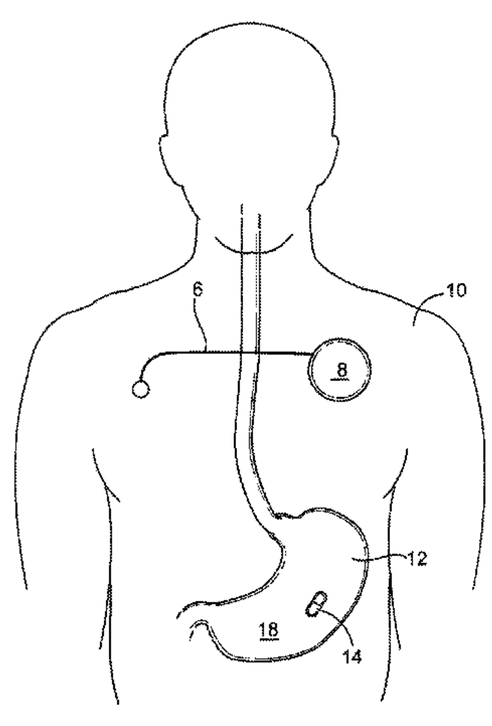

(51) **Int. Cl.**

H01M 6/32	(2006.01)
A61K 49/00	(2006.01)
H01M 10/04	(2006.01)
A61B 5/07	(2006.01)
A61B 5/145	(2006.01)
A61B 5/1473	(2006.01)
A61B 5/00	(2006.01)
H01M 10/00	(2006.01)
A61J 3/00	(2006.01)

(52) **U.S. Cl.**

CPC ***A61B5/4238*** (2013.01); ***A61B 5/073*** (2013.01); ***A61B 5/14539*** (2013.01); ***A61B 5/1473*** (2013.01); ***A61B 5/4839*** (2013.01); *A61B 2560/0214* (2013.01); *A61J 3/007* (2013.01)

USPC **600/300**; 600/302; 340/572.1; 429/498; 424/408

(56) **References Cited**

U.S. PATENT DOCUMENTS

3,642,008 A 2/1972 Bolduc
3,679,480 A 7/1972 Brown et al.
3,682,160 A 8/1972 Murata
3,719,183 A 3/1973 Schwartz
3,828,766 A 8/1974 Krasnow
3,837,339 A 9/1974 Aisenberg et al.
3,893,111 A 7/1975 Cotter
3,944,064 A 3/1976 Bashaw et al.
3,967,202 A 6/1976 Batz
3,989,050 A 11/1976 Buchalter
4,017,856 A 4/1977 Wiegand
4,055,178 A 10/1977 Harrigan
4,062,750 A 12/1977 Butler
4,077,397 A 3/1978 Ellis
4,077,398 A 3/1978 Ellis
4,082,087 A 4/1978 Howson
4,090,752 A 5/1978 Long
4,106,348 A 8/1978 Auphan
4,129,125 A 12/1978 Lester
4,166,453 A 9/1979 McClelland
4,239,046 A 12/1980 Ong
4,251,795 A 2/1981 Shibasaki et al.
4,269,189 A 5/1981 Abraham
4,331,654 A 5/1982 Morris
4,345,588 A 8/1982 Widder et al.
4,418,697 A 12/1983 Tama
4,425,117 A 1/1984 Hugemann et al.
4,439,196 A 3/1984 Higuchi
4,494,950 A 1/1985 Fischell
4,559,950 A 12/1985 Vaughan
4,564,363 A 1/1986 Bagnall et al.
4,635,641 A 1/1987 Hoffman
4,654,165 A 3/1987 Eisenberg
4,669,479 A 6/1987 Dunseath
4,687,660 A 8/1987 Baker et al.
4,725,997 A 2/1988 Urquhart et al.
4,763,659 A 8/1988 Dunseath
4,784,162 A 11/1988 Ricks
4,793,825 A 12/1988 Benjamin et al.
4,809,705 A 3/1989 Ascher
4,844,076 A 7/1989 Lesho
4,876,093 A 10/1989 Theeuwes et al.
4,896,261 A 1/1990 Nolan
4,975,230 A 12/1990 Pinkhasov
4,987,897 A 1/1991 Funke
5,000,957 A 3/1991 Eckenhoff et al.
5,016,634 A 5/1991 Vock
5,079,006 A 1/1992 Urquhart
5,167,626 A 12/1992 Casper
5,176,626 A 1/1993 Soehendra
5,245,332 A 9/1993 Katzenstein et al.
5,261,402 A 11/1993 DiSabito
5,263,481 A 11/1993 Axelgaard et al.
5,279,607 A 1/1994 Schentag et al.
5,281,287 A 1/1994 Lloyd
5,283,136 A 2/1994 Peled et al.
5,305,745 A 4/1994 Zacouto
5,318,557 A 6/1994 Gross
5,394,882 A 3/1995 Mawhinney
5,395,366 A 3/1995 D'Andrea et al.
5,458,141 A 10/1995 Neil et al.
5,485,841 A 1/1996 Watkin et al.
5,511,548 A 4/1996 Riazzi et al.
5,567,210 A 10/1996 Bates et al.
5,596,302 A 1/1997 Mastrocola et al.
D377,983 S 2/1997 Sabri et al.
5,600,548 A 2/1997 Nguyen et al.
5,634,468 A 6/1997 Platt
5,645,063 A 7/1997 Straka
5,720,771 A 2/1998 Snell
5,738,708 A 4/1998 Peachey et al.
5,740,811 A 4/1998 Hedberg
5,757,326 A 5/1998 Koyama et al.
5,792,048 A 8/1998 Schaefer
5,802,467 A 9/1998 Salazar
5,833,716 A 11/1998 Bar-Or
5,845,265 A 12/1998 Woolston
5,862,803 A 1/1999 Besson
5,868,136 A 2/1999 Fox
5,921,925 A 7/1999 Cartmell et al.
5,925,030 A 7/1999 Gross et al.
5,957,854 A 9/1999 Besson
5,963,132 A 10/1999 Yoakum et al.
5,974,124 A 10/1999 Schlueter, Jr. et al.
5,999,846 A 12/1999 Pardey et al.
6,023,631 A 2/2000 Cartmell et al.
6,038,464 A 3/2000 Axelgaard et al.
6,042,710 A 3/2000 Dubrow
6,047,203 A 4/2000 Sackner
6,076,016 A 6/2000 Feierbach et al.
6,081,734 A 6/2000 Batz
6,083,248 A 7/2000 Thompson
6,090,489 A * 7/2000 Hayakawa et al. 428/409
6,095,985 A 8/2000 Raymond et al.
6,117,077 A 9/2000 Del Mar et al.
6,122,351 A 9/2000 Schlueter, Jr. et al.
6,141,592 A 10/2000 Pauly
6,149,940 A 11/2000 Maggi et al.
6,200,265 B1 3/2001 Walsh et al.
6,204,764 B1 3/2001 Maloney
6,206,702 B1 3/2001 Hayden et al.
6,217,744 B1 4/2001 Crosby
6,231,593 B1 5/2001 Meserol
6,245,057 B1 6/2001 Sieben et al.
6,269,058 B1 7/2001 Yamanoi et al.
6,275,476 B1 8/2001 Wood
6,285,897 B1 9/2001 Kilcoyne et al.
6,287,252 B1 9/2001 Lugo
6,288,629 B1 9/2001 Cofino et al.
6,289,238 B1 9/2001 Besson
6,315,719 B1 11/2001 Rode et al.
6,342,774 B1 1/2002 Kreisinger et al.
6,344,824 B1 2/2002 Takasugi et al.
6,358,202 B1 3/2002 Arent
6,364,834 B1 4/2002 Reuss
6,366,206 B1 4/2002 Ishikawa et al.
6,368,190 B1 4/2002 Easter et al.
6,371,927 B1 4/2002 Brune
6,374,670 B1 4/2002 Spelman
6,380,858 B1 4/2002 Yarin et al.
6,390,088 B1 5/2002 Noehl et al.
6,394,953 B1 5/2002 Devlin et al.
6,394,997 B1 5/2002 Lemelson
6,409,674 B1 6/2002 Brockway et al.
6,426,863 B1 7/2002 Munshi
6,432,292 B1 8/2002 Pinto et al.
6,440,069 B1 8/2002 Raymond et al.
6,441,747 B1 8/2002 Khair
6,453,199 B1 9/2002 Kobozev
6,477,424 B1 11/2002 Thompson et al.
6,482,156 B2 11/2002 Lliff

(56) **References Cited**

U.S. PATENT DOCUMENTS

6,496,705 B1 12/2002 Ng et al.
6,526,315 B1 2/2003 Inagawa
6,544,174 B2 4/2003 West
6,564,079 B1 5/2003 Cory
6,577,893 B1 6/2003 Besson
6,579,231 B1 6/2003 Phipps
6,599,284 B2 7/2003 Faour et al.
6,605,046 B1 8/2003 Del Mar
6,609,018 B2 8/2003 Cory
6,612,984 B1 9/2003 Kerr
6,632,175 B1 10/2003 Marshall
6,632,216 B2 10/2003 Houzego et al.
6,635,279 B2 10/2003 Kolter et al.
6,643,541 B2 11/2003 Mok et al.
6,654,638 B1 11/2003 Sweeney
6,663,846 B1 12/2003 McCombs
6,673,474 B2 1/2004 Yamamoto
6,680,923 B1 1/2004 Leon
6,689,117 B2 2/2004 Sweeney et al.
6,694,161 B2 2/2004 Mehrotra
6,704,602 B2 3/2004 Berg et al.
6,720,923 B1 4/2004 Hayward et al.
6,738,671 B2 5/2004 Christophersom et al.
6,740,033 B1 5/2004 Olejniczak et al.
6,745,082 B2 6/2004 Axelgaard et al.
6,755,783 B2 6/2004 Cosentino et al.
6,757,523 B2 6/2004 Fry
6,759,968 B2 7/2004 Zierolf
6,773,429 B2 8/2004 Sheppard et al.
6,800,060 B2 10/2004 Marshall
6,801,137 B2 10/2004 Eggers et al.
6,822,554 B2 11/2004 Vrijens et al.
6,836,862 B1 12/2004 Erekson et al.
6,839,659 B2 1/2005 Tarassenko et al.
6,840,904 B2 1/2005 Goldberg
6,842,636 B2 1/2005 Perrault
6,845,272 B1 1/2005 Thomsen
6,864,780 B2 3/2005 Doi
6,879,810 B2 4/2005 Bouet
6,909,878 B2 6/2005 Haller
6,922,592 B2 7/2005 Thompson et al.
6,928,370 B2 8/2005 Anuzis et al.
6,929,636 B1 8/2005 von Alten
6,937,150 B2 8/2005 Medema
6,942,616 B2 9/2005 Kerr
6,951,536 B2 10/2005 Yokoi
6,957,107 B2 10/2005 Rogers et al.
6,968,153 B1 11/2005 Heinonen
6,987,965 B2 1/2006 Ng et al.
6,990,082 B1 1/2006 Zehavi et al.
7,002,476 B2 2/2006 Rapchak
7,004,395 B2 2/2006 Koenck
7,009,634 B2 3/2006 Iddan et al.
7,009,946 B1 3/2006 Kardach
7,013,162 B2 3/2006 Gorsuch
7,016,648 B2 3/2006 Haller
7,020,508 B2 3/2006 Stivoric
7,024,248 B2 4/2006 Penner et al.
7,031,745 B2 4/2006 Shen
7,031,857 B2 4/2006 Tarassenko et al.
7,039,453 B2 5/2006 Mullick
7,044,911 B2 5/2006 Drinan et al.
7,046,649 B2 5/2006 Awater et al.
7,076,437 B1 7/2006 Levy
7,118,531 B2 10/2006 Krill
7,127,300 B2 10/2006 Mazar et al.
7,146,228 B2 12/2006 Nielsen
7,146,449 B2 12/2006 Do et al.
7,149,581 B2 12/2006 Goedeke et al.
7,154,071 B2 12/2006 Sattler et al.
7,155,232 B2 12/2006 Godfrey et al.
7,160,258 B2 1/2007 Imran
7,161,484 B2 1/2007 Tsoukalis
7,164,942 B2 1/2007 Avrahami
7,171,166 B2 1/2007 Ng et al.
7,171,177 B2 1/2007 Park et al.
7,171,259 B2 1/2007 Rytky
7,176,784 B2 2/2007 Gilbert et al.
7,187,960 B2 3/2007 Abreu
7,188,767 B2 3/2007 Penuela
7,194,038 B1 3/2007 Inkinen
7,206,630 B1 4/2007 Tarler
7,209,790 B2 4/2007 Thompson et al.
7,215,660 B2 5/2007 Perlman
7,215,991 B2 5/2007 Besson
7,218,967 B2 5/2007 Bergelson
7,231,451 B2 6/2007 Law
7,243,118 B2 7/2007 Lou
7,246,521 B2 7/2007 Kim
7,249,212 B2 7/2007 Do
7,252,792 B2 8/2007 Perrault
7,253,716 B2 8/2007 Lovoi et al.
7,261,690 B2 8/2007 Teller
7,270,633 B1 9/2007 Goscha
7,273,454 B2 9/2007 Raymond et al.
7,289,855 B2 10/2007 Nghiem
7,291,497 B2 11/2007 Holmes
7,292,139 B2 11/2007 Mazar et al.
7,294,105 B1 11/2007 Islam
7,313,163 B2 12/2007 Liu
7,317,378 B2 1/2008 Jarvis et al.
7,318,808 B2 1/2008 Tarassenko et al.
7,336,929 B2 2/2008 Yasuda
7,342,895 B2 3/2008 Serpa
7,346,380 B2 3/2008 Axelgaard
7,349,722 B2 3/2008 Witkowski
7,352,998 B2 4/2008 Palin
7,353,258 B2 4/2008 Washburn
7,357,891 B2 4/2008 Yang et al.
7,359,674 B2 4/2008 Markki
7,366,558 B2 4/2008 Virtanen et al.
7,368,191 B2 5/2008 Andelman et al.
7,373,196 B2 5/2008 Ryu et al.
7,375,739 B2 5/2008 Robbins
7,376,435 B2 5/2008 McGowan
7,382,263 B2 6/2008 Danowski et al.
7,387,607 B2 6/2008 Holt
7,388,903 B2 6/2008 Godfrey et al.
7,389,088 B2 6/2008 Kim
7,392,015 B1 6/2008 Farlow
7,395,106 B2 7/2008 Ryu et al.
7,396,330 B2 7/2008 Banet
7,404,968 B2 7/2008 Abrams et al.
7,413,544 B2 8/2008 Kerr
7,414,534 B1 8/2008 Kroll et al.
7,414,543 B2 8/2008 Rye et al.
7,415,242 B1 8/2008 Ngan
7,424,268 B2 9/2008 Diener
7,424,319 B2 9/2008 Muehlsteff
7,427,266 B2 9/2008 Ayer et al.
7,471,665 B2 12/2008 Perlman
7,499,674 B2 3/2009 Salokannel
7,502,643 B2 3/2009 Farringdon et al.
7,510,121 B2 3/2009 Koenck
7,512,448 B2 3/2009 Malick
7,515,043 B2 4/2009 Welch
7,519,416 B2 4/2009 Sula et al.
7,523,756 B2 4/2009 Minai
7,525,426 B2 4/2009 Edelstein
7,539,533 B2 5/2009 Tran
7,542,878 B2 6/2009 Nanikashvili
7,551,590 B2 6/2009 Haller
7,554,452 B2 6/2009 Cole
7,558,620 B2 7/2009 Ishibashi
7,575,005 B2 8/2009 Mumford
7,616,111 B2 11/2009 Covannon
7,616,710 B2 11/2009 Kim et al.
7,617,001 B2 11/2009 Penner
7,639,473 B2 12/2009 Hsu et al.
7,640,802 B2 1/2010 King et al.
7,647,112 B2 1/2010 Tracey
7,647,185 B2 1/2010 Tarassenko et al.
7,653,031 B2 1/2010 Godfrey et al.
7,672,714 B2 3/2010 Kuo

(56) **References Cited**

U.S. PATENT DOCUMENTS

7,673,679	B2	3/2010	Harrison et al.
7,678,043	B2	3/2010	Gilad
7,697,994	B2	4/2010	VanDanacker et al.
7,720,036	B2	5/2010	Sadri
7,729,776	B2	6/2010	Von Arx et al.
7,733,224	B2	6/2010	Tran
7,736,318	B2	6/2010	Cosentino
7,756,587	B2	7/2010	Penner et al.
7,779,614	B1	8/2010	McGonagle et al.
7,796,043	B2	9/2010	Euliano et al.
7,797,033	B2	9/2010	D'Andrea et al.
7,806,852	B1	10/2010	Jursen
7,809,399	B2	10/2010	Lu
7,844,341	B2	11/2010	Von Arx et al.
7,904,133	B2	3/2011	Gehman et al.
D639,437	S	6/2011	Bishay et al.
8,025,149	B2	9/2011	Sterry et al.
8,036,731	B2	10/2011	Kimchy et al.
8,073,707	B2	12/2011	Teller et al.
8,083,128	B2	12/2011	Dembo et al.
8,123,576	B2	2/2012	Kim
8,180,425	B2	5/2012	Selvitelli et al.
8,200,320	B2	6/2012	Kovacs
8,214,007	B2	7/2012	Baker et al.
8,224,667	B1	7/2012	Miller et al.
8,238,998	B2	8/2012	Park
8,249,686	B2	8/2012	Libbus et al.
8,258,962	B2	9/2012	Robertson et al.
8,285,356	B2	10/2012	Bly et al.
8,290,574	B2	10/2012	Feild et al.
8,301,232	B2	10/2012	Albert et al.
8,308,640	B2	11/2012	Baldus et al.
8,315,687	B2	11/2012	Cross et al.
8,369,936	B2	2/2013	Farringdon et al.
8,386,009	B2	2/2013	Lindberg et al.
8,389,003	B2	3/2013	Mintchev et al.
8,440,274	B2	5/2013	Wang
8,597,186	B2	12/2013	Hafezi et al.
2001/0027331	A1	10/2001	Thompson
2001/0031071	A1	10/2001	Nichols et al.
2001/0044588	A1	11/2001	Mault
2001/0051766	A1	12/2001	Gazdzinski
2001/0056262	A1	12/2001	Cabiri et al.
2002/0002326	A1	1/2002	Causey, III
2002/0026111	A1	2/2002	Ackerman
2002/0032384	A1	3/2002	Raymond et al.
2002/0032385	A1	3/2002	Raymond et al.
2002/0040278	A1	4/2002	Anuzis et al.
2002/0077620	A1	6/2002	Sweeney et al.
2002/0132226	A1	9/2002	Nair
2002/0138009	A1	9/2002	Brockway et al.
2002/0193669	A1	12/2002	Glukhovsky
2002/0193846	A1	12/2002	Pool et al.
2003/0017826	A1	1/2003	Fishman
2003/0023150	A1	1/2003	Yokoi et al.
2003/0028226	A1	2/2003	Thompson
2003/0063522	A1	4/2003	Sagar
2003/0065536	A1	4/2003	Hansen
2003/0076179	A1	4/2003	Branch et al.
2003/0083559	A1	5/2003	Thompson
2003/0126593	A1	7/2003	Mault
2003/0130714	A1	7/2003	Nielsen et al.
2003/0135128	A1	7/2003	Suffin et al.
2003/0135392	A1	7/2003	Vrijens et al.
2003/0152622	A1	8/2003	Louie-Helm et al.
2003/0158466	A1	8/2003	Lynn et al.
2003/0158756	A1	8/2003	Abramson
2003/0162556	A1	8/2003	Libes
2003/0164401	A1	9/2003	Andreasson et al.
2003/0167000	A1	9/2003	Mullick et al.
2003/0171791	A1	9/2003	KenKnight
2003/0171898	A1	9/2003	Tarassenko et al.
2003/0181788	A1	9/2003	Yokoi et al.
2003/0181815	A1	9/2003	Ebner et al.
2003/0185286	A1	10/2003	Yuen
2003/0187337	A1	10/2003	Tarassenko et al.
2003/0187338	A1	10/2003	Say et al.
2003/0195403	A1	10/2003	Berner et al.
2003/0213495	A1	11/2003	Fujita et al.
2003/0214579	A1	11/2003	Iddan
2003/0216622	A1	11/2003	Meron et al.
2003/0216625	A1	11/2003	Phipps
2003/0216666	A1	11/2003	Ericson et al.
2003/0216729	A1	11/2003	Marchitto
2003/0229382	A1	12/2003	Sun et al.
2003/0232895	A1	12/2003	Omidian et al.
2004/0008123	A1	1/2004	Carrender et al.
2004/0018476	A1	1/2004	LaDue
2004/0019172	A1	1/2004	Yang et al.
2004/0034295	A1	2/2004	Salganicoff
2004/0049245	A1	3/2004	Gass
2004/0073095	A1	4/2004	Causey et al.
2004/0073454	A1	4/2004	Urquhart et al.
2004/0077995	A1	4/2004	Ferek-Petric
2004/0082982	A1	4/2004	Gord et al.
2004/0087839	A1	5/2004	Raymond et al.
2004/0092801	A1	5/2004	Drakulic
2004/0106859	A1	6/2004	Say et al.
2004/0111011	A1	6/2004	Uchiyama et al.
2004/0115517	A1	6/2004	Fukuda et al.
2004/0121015	A1	6/2004	Chidlaw et al.
2004/0122297	A1	6/2004	Stahmann et al.
2004/0148140	A1	7/2004	Tarassenko et al.
2004/0153007	A1	8/2004	Harris
2004/0167226	A1	8/2004	Serafini et al.
2004/0167801	A1	8/2004	Say et al.
2004/0171914	A1	9/2004	Avni
2004/0193020	A1	9/2004	Chiba
2004/0193029	A1	9/2004	Gluhovsky
2004/0193446	A1	9/2004	Mayer et al.
2004/0199222	A1	10/2004	Sun et al.
2004/0215084	A1	10/2004	Shimizu et al.
2004/0218683	A1	11/2004	Batra
2004/0220643	A1	11/2004	Schmidt
2004/0224644	A1	11/2004	Wu
2004/0225199	A1	11/2004	Evanyk
2004/0253304	A1	12/2004	Gross et al.
2004/0258571	A1	12/2004	Lee et al.
2004/0260154	A1	12/2004	Sidelnik
2004/0267240	A1	12/2004	Gross et al.
2005/0017841	A1	1/2005	Doi
2005/0020887	A1	1/2005	Goldberg
2005/0021370	A1	1/2005	Riff
2005/0024198	A1	2/2005	Ward
2005/0027205	A1	2/2005	Tarassenko et al.
2005/0038321	A1	2/2005	Fujita et al.
2005/0043634	A1	2/2005	Yokoi et al.
2005/0043894	A1	2/2005	Fernandez
2005/0054897	A1	3/2005	Hashimoto et al.
2005/0055014	A1	3/2005	Coppeta et al.
2005/0062644	A1	3/2005	Leci
2005/0065407	A1	3/2005	Nakamura et al.
2005/0070778	A1	3/2005	Lackey
2005/0075145	A1	4/2005	Dvorak et al.
2005/0092108	A1	5/2005	Andermo
2005/0096514	A1	5/2005	Starkebaum
2005/0096562	A1	5/2005	Delalic et al.
2005/0101843	A1	5/2005	Quinn
2005/0101872	A1	5/2005	Sattler
2005/0115561	A1	6/2005	Stahmann et al.
2005/0116820	A1	6/2005	Goldreich
2005/0117389	A1	6/2005	Worledge
2005/0121322	A1	6/2005	Say et al.
2005/0131281	A1	6/2005	Ayer et al.
2005/0137480	A1	6/2005	Alt et al.
2005/0143623	A1	6/2005	Kojima
2005/0146594	A1	7/2005	Nakatani et al.
2005/0148883	A1	7/2005	Boesen
2005/0151625	A1	7/2005	Lai
2005/0154428	A1	7/2005	Bruinsma
2005/0165323	A1	7/2005	Montgomery
2005/0177069	A1	8/2005	Takizawa
2005/0182389	A1	8/2005	LaPorte
2005/0187789	A1	8/2005	Hatlestad et al.

(56) **References Cited**

U.S. PATENT DOCUMENTS

2005/0192489 A1 9/2005 Marshall
2005/0197680 A1 9/2005 DelMain et al.
2005/0228268 A1 10/2005 Cole
2005/0234307 A1 10/2005 Heinonen
2005/0240305 A1 10/2005 Bogash et al.
2005/0245794 A1 11/2005 Dinsmoor
2005/0245839 A1 11/2005 Stivoric et al.
2005/0259768 A1 11/2005 Yang et al.
2005/0261559 A1 11/2005 Mumford
2005/0267556 A1 12/2005 Shuros et al.
2005/0267756 A1 12/2005 Schultz et al.
2005/0277912 A1 12/2005 John
2005/0277999 A1 12/2005 Strother et al.
2005/0280539 A1 12/2005 Pettus
2005/0285746 A1 12/2005 Sengupta
2005/0288594 A1 12/2005 Lewkowicz et al.
2006/0001496 A1 1/2006 Abrosimov et al.
2006/0028727 A1 2/2006 Moon et al.
2006/0036134 A1 2/2006 Tarassenko et al.
2006/0061472 A1 3/2006 Lovoi et al.
2006/0065713 A1 3/2006 Kingery
2006/0068006 A1 3/2006 Begleiter
2006/0074283 A1 4/2006 Henderson
2006/0074319 A1 4/2006 Barnes et al.
2006/0078765 A1 4/2006 Yang et al.
2006/0095091 A1 5/2006 Drew
2006/0095093 A1 5/2006 Bettesh et al.
2006/0100533 A1 5/2006 Han
2006/0109058 A1 5/2006 Keating
2006/0110962 A1 5/2006 Powell
2006/0122474 A1 6/2006 Teller et al.
2006/0122667 A1 6/2006 Chavan et al.
2006/0136266 A1 6/2006 Tarassenko et al.
2006/0142648 A1 6/2006 Banet
2006/0145876 A1 7/2006 Kimura
2006/0148254 A1 7/2006 McLean
2006/0149339 A1 7/2006 Burnes
2006/0155174 A1 7/2006 Glukhovsky et al.
2006/0155183 A1 7/2006 Kroecker
2006/0158820 A1 7/2006 Takiguchi
2006/0161225 A1 7/2006 Sormann et al.
2006/0179949 A1 8/2006 Kim
2006/0183992 A1 8/2006 Kawashima
2006/0183993 A1 8/2006 Horn
2006/0184092 A1 8/2006 Atanasoska et al.
2006/0204738 A1 9/2006 Dubrow et al.
2006/0210626 A1 9/2006 Spaeder
2006/0216603 A1 9/2006 Choi
2006/0218011 A1 9/2006 Walker
2006/0229053 A1 10/2006 Sivard
2006/0235489 A1 10/2006 Drew
2006/0247505 A1 11/2006 Siddiqui
2006/0253005 A1 11/2006 Drinan
2006/0255064 A1 11/2006 Donaldson
2006/0265246 A1 11/2006 Hoag
2006/0267774 A1* 11/2006 Feinberg et al. 340/572.8
2006/0270346 A1 11/2006 Ibrahim
2006/0273882 A1 12/2006 Posamentier
2006/0276702 A1* 12/2006 McGinnis 600/372
2006/0280227 A1 12/2006 Pinkney
2006/0282001 A1 12/2006 Noel
2006/0289640 A1 12/2006 Mercure
2006/0293607 A1 12/2006 Alt
2007/0000776 A1 1/2007 Karube et al.
2007/0002038 A1 1/2007 Suzuki
2007/0006636 A1 1/2007 King et al.
2007/0008113 A1 1/2007 Spoonhower et al.
2007/0016089 A1 1/2007 Fischell et al.
2007/0027386 A1 2/2007 Such
2007/0027388 A1 2/2007 Chou
2007/0038054 A1 2/2007 Zhou
2007/0049339 A1 3/2007 Barak et al.
2007/0055098 A1 3/2007 Shimizu et al.
2007/0060797 A1 3/2007 Ball
2007/0066929 A1 3/2007 Ferren et al.
2007/0073353 A1 3/2007 Rooney et al.
2007/0096765 A1 5/2007 Kagan
2007/0106346 A1 5/2007 Bergelson
2007/0123772 A1 5/2007 Euliano
2007/0129622 A1 6/2007 Bourget
2007/0130287 A1 6/2007 Kumar
2007/0135691 A1 6/2007 Zingelewicz et al.
2007/0135803 A1 6/2007 Belson
2007/0142721 A1 6/2007 Berner et al.
2007/0156016 A1 7/2007 Betesh
2007/0160789 A1 7/2007 Merical
2007/0162089 A1 7/2007 Mosesov
2007/0162090 A1 7/2007 Penner
2007/0167495 A1 7/2007 Brown et al.
2007/0167848 A1 7/2007 Kuo et al.
2007/0173701 A1 7/2007 Al-Ali
2007/0179347 A1 8/2007 Tarassenko et al.
2007/0180047 A1 8/2007 Dong et al.
2007/0184115 A1* 8/2007 Mamajiwalla et al. 424/486
2007/0185393 A1 8/2007 Zhou
2007/0191002 A1 8/2007 Ge
2007/0196456 A1 8/2007 Stevens
2007/0207793 A1 9/2007 Myer
2007/0207858 A1 9/2007 Breving
2007/0208233 A1 9/2007 Kovacs
2007/0213659 A1 9/2007 Trovato et al.
2007/0237719 A1 10/2007 Jones
2007/0244370 A1 10/2007 Kuo et al.
2007/0249946 A1 10/2007 Kumar et al.
2007/0255198 A1 11/2007 Leong et al.
2007/0255330 A1 11/2007 Lee
2007/0270672 A1 11/2007 Hayter
2007/0279217 A1 12/2007 Venkatraman
2007/0282174 A1 12/2007 Sabatino
2007/0282177 A1 12/2007 Pilz
2007/0291715 A1 12/2007 Laroia et al.
2007/0299480 A1 12/2007 Hill
2008/0014866 A1 1/2008 Lipowski
2008/0015421 A1 1/2008 Penner
2008/0015494 A1 1/2008 Santini et al.
2008/0020037 A1 1/2008 Robertson et al.
2008/0021519 A1 1/2008 DeGeest
2008/0021521 A1 1/2008 Shah
2008/0027679 A1 1/2008 Shklarski
2008/0033273 A1 2/2008 Zhou
2008/0033301 A1 2/2008 Dellavecchia et al.
2008/0038588 A1 2/2008 Lee
2008/0039700 A1 2/2008 Drinan et al.
2008/0046038 A1 2/2008 Hill
2008/0051647 A1* 2/2008 Wu et al. 600/382
2008/0051667 A1 2/2008 Goldreich
2008/0051767 A1 2/2008 Rossing et al.
2008/0058614 A1 3/2008 Banet
2008/0062856 A1 3/2008 Feher
2008/0065168 A1 3/2008 Bitton et al.
2008/0074307 A1 3/2008 Boric-Lubecke
2008/0077015 A1 3/2008 Botic-Lubecke
2008/0077028 A1 3/2008 Schaldach et al.
2008/0077188 A1 3/2008 Denker et al.
2008/0091089 A1 4/2008 Guillory et al.
2008/0091114 A1 4/2008 Min
2008/0097549 A1 4/2008 Colbaugh
2008/0097917 A1 4/2008 Dicks
2008/0099366 A1 5/2008 Niemiec et al.
2008/0103440 A1 5/2008 Ferren et al.
2008/0114224 A1 5/2008 Bandy et al.
2008/0119705 A1 5/2008 Patel
2008/0119716 A1 5/2008 Boric-Lubecke
2008/0121825 A1 5/2008 Trovato et al.
2008/0137566 A1 6/2008 Marholev
2008/0139907 A1 6/2008 Rao et al.
2008/0140403 A1 6/2008 Hughes et al.
2008/0146871 A1 6/2008 Arneson et al.
2008/0146889 A1 6/2008 Young
2008/0146892 A1 6/2008 LeBeouf
2008/0154104 A1 6/2008 Lamego
2008/0166992 A1 7/2008 Ricordi
2008/0175898 A1 7/2008 Jones et al.
2008/0183245 A1 7/2008 Van Oort

(56) **References Cited**

U.S. PATENT DOCUMENTS

2008/0188837	A1	8/2008	Belsky
2008/0194912	A1	8/2008	Trovato et al.
2008/0208009	A1	8/2008	Shklarski
2008/0214901	A1	9/2008	Gehman
2008/0214985	A1	9/2008	Yanaki
2008/0223936	A1	9/2008	Mickle et al.
2008/0243020	A1	10/2008	Chou
2008/0249360	A1	10/2008	Li
2008/0262320	A1	10/2008	Schaefer et al.
2008/0262336	A1	10/2008	Ryu
2008/0269664	A1	10/2008	Trovato et al.
2008/0275312	A1	11/2008	Mosesov
2008/0281636	A1	11/2008	Jung et al.
2008/0284599	A1	11/2008	Zdeblick et al.
2008/0288026	A1	11/2008	Cross et al.
2008/0288027	A1	11/2008	Kroll
2008/0294020	A1	11/2008	Sapounas
2008/0299197	A1	12/2008	Toneguzzo et al.
2008/0300572	A1	12/2008	Rankers
2008/0303638	A1	12/2008	Nguyen
2008/0306357	A1	12/2008	Korman
2008/0306359	A1	12/2008	Zdeblick et al.
2008/0306360	A1	12/2008	Robertson et al.
2008/0306362	A1	12/2008	Davis
2008/0311852	A1	12/2008	Hansen
2008/0312522	A1	12/2008	Rowlandson
2008/0316020	A1	12/2008	Robertson
2009/0009332	A1	1/2009	Nunez et al.
2009/0024045	A1	1/2009	Prakash
2009/0024112	A1	1/2009	Edwards et al.
2009/0030293	A1	1/2009	Cooper et al.
2009/0030297	A1	1/2009	Miller
2009/0034209	A1	2/2009	Joo
2009/0043171	A1	2/2009	Rule
2009/0048498	A1	2/2009	Riskey
2009/0062634	A1	3/2009	Say et al.
2009/0062670	A1	3/2009	Sterling
2009/0069642	A1	3/2009	Gao
2009/0069655	A1	3/2009	Say et al.
2009/0069656	A1	3/2009	Say et al.
2009/0069657	A1	3/2009	Say et al.
2009/0069658	A1	3/2009	Say et al.
2009/0076340	A1	3/2009	Libbus et al.
2009/0076343	A1	3/2009	James
2009/0076397	A1	3/2009	Libbus et al.
2009/0082645	A1	3/2009	Hafezi et al.
2009/0087483	A1	4/2009	Sison
2009/0088618	A1	4/2009	Ameson
2009/0099435	A1	4/2009	Say et al.
2009/0105561	A1	4/2009	Boyden et al.
2009/0110148	A1	4/2009	Zhang
2009/0112626	A1	4/2009	Talbot
2009/0124871	A1	5/2009	Arshak
2009/0131774	A1	5/2009	Sweitzer
2009/0135886	A1	5/2009	Robertson et al.
2009/0142853	A1	6/2009	Warrington et al.
2009/0149839	A1	6/2009	Hyde et al.
2009/0157113	A1	6/2009	Marcotte
2009/0157358	A1	6/2009	Kim
2009/0161602	A1	6/2009	Matsumoto
2009/0163789	A1	6/2009	Say et al.
2009/0171180	A1	7/2009	Pering
2009/0173628	A1	7/2009	Say et al.
2009/0177055	A1	7/2009	Say et al.
2009/0177056	A1	7/2009	Say et al.
2009/0177057	A1	7/2009	Say et al.
2009/0177058	A1	7/2009	Say et al.
2009/0177059	A1	7/2009	Say et al.
2009/0177060	A1	7/2009	Say et al.
2009/0177061	A1	7/2009	Say et al.
2009/0177062	A1	7/2009	Say et al.
2009/0177063	A1	7/2009	Say et al.
2009/0177064	A1	7/2009	Say et al.
2009/0177065	A1	7/2009	Say et al.
2009/0177066	A1	7/2009	Say et al.
2009/0182206	A1	7/2009	Najafi
2009/0182207	A1	7/2009	Riskey et al.
2009/0182212	A1	7/2009	Say et al.
2009/0182213	A1	7/2009	Say et al.
2009/0182214	A1	7/2009	Say et al.
2009/0182215	A1	7/2009	Say et al.
2009/0182388	A1	7/2009	Von Arx
2009/0187088	A1	7/2009	Say et al.
2009/0187089	A1	7/2009	Say et al.
2009/0187090	A1	7/2009	Say et al.
2009/0187091	A1	7/2009	Say et al.
2009/0187092	A1	7/2009	Say et al.
2009/0187093	A1	7/2009	Say et al.
2009/0187094	A1	7/2009	Say et al.
2009/0187095	A1	7/2009	Say et al.
2009/0187381	A1	7/2009	King et al.
2009/0192351	A1	7/2009	Nishino
2009/0192368	A1	7/2009	Say et al.
2009/0192369	A1	7/2009	Say et al.
2009/0192370	A1	7/2009	Say et al.
2009/0192371	A1	7/2009	Say et al.
2009/0192372	A1	7/2009	Say et al.
2009/0192373	A1	7/2009	Say et al.
2009/0192374	A1	7/2009	Say et al.
2009/0192375	A1	7/2009	Say et al.
2009/0192376	A1	7/2009	Say et al.
2009/0192377	A1	7/2009	Say et al.
2009/0192378	A1	7/2009	Say et al.
2009/0192379	A1	7/2009	Say et al.
2009/0198115	A1	8/2009	Say et al.
2009/0198116	A1	8/2009	Say et al.
2009/0198175	A1	8/2009	Say et al.
2009/0203964	A1	8/2009	Shimizu et al.
2009/0203971	A1	8/2009	Sciarappa
2009/0203972	A1	8/2009	Heneghan
2009/0203978	A1	8/2009	Say et al.
2009/0204265	A1	8/2009	Hackett
2009/0210164	A1	8/2009	Say et al.
2009/0216101	A1	8/2009	Say et al.
2009/0216102	A1	8/2009	Say et al.
2009/0227204	A1	9/2009	Robertson et al.
2009/0227876	A1	9/2009	Tran
2009/0227940	A1	9/2009	Say et al.
2009/0227941	A1	9/2009	Say et al.
2009/0228214	A1	9/2009	Say et al.
2009/0231125	A1	9/2009	Baldus
2009/0234200	A1	9/2009	Husheer
2009/0243833	A1	10/2009	Huang
2009/0253960	A1	10/2009	Takenaka et al.
2009/0256702	A1	10/2009	Robertson
2009/0264714	A1	10/2009	Chou
2009/0264964	A1	10/2009	Abrahamson
2009/0265186	A1	10/2009	Tarassenko et al.
2009/0273467	A1	11/2009	Elixmann
2009/0277815	A1	11/2009	Kohl et al.
2009/0281539	A1	11/2009	Selig
2009/0292194	A1	11/2009	Libbus et al.
2009/0295548	A1	12/2009	Ronkka
2009/0296677	A1	12/2009	Mahany
2009/0301925	A1	12/2009	Alloro et al.
2009/0303920	A1	12/2009	Mahany
2009/0306633	A1	12/2009	Trovato et al.
2009/0312619	A1	12/2009	Say et al.
2009/0318303	A1	12/2009	Delamarche et al.
2009/0318761	A1	12/2009	Rabinovitz
2009/0318779	A1	12/2009	Tran
2009/0318783	A1	12/2009	Rohde
2009/0318793	A1	12/2009	Datta
2010/0006585	A1	1/2010	Flowers et al.
2010/0010330	A1	1/2010	Rankers
2010/0033324	A1	2/2010	Shimizu et al.
2010/0049006	A1	2/2010	Magar
2010/0049012	A1	2/2010	Dijksman et al.
2010/0049069	A1	2/2010	Tarassenko et al.
2010/0056878	A1	3/2010	Partin
2010/0056891	A1	3/2010	Say et al.
2010/0056939	A1	3/2010	Tarassenko et al.
2010/0057041	A1	3/2010	Hayter
2010/0062709	A1	3/2010	Kato

(56) **References Cited**

U.S. PATENT DOCUMENTS

2010/0063438	A1	3/2010	Bengtsson
2010/0063841	A1	3/2010	D'Ambrosia et al.
2010/0069002	A1	3/2010	Rong
2010/0069717	A1	3/2010	Hafezi et al.
2010/0081894	A1	4/2010	Zdeblick et al.
2010/0099967	A1	4/2010	Say et al.
2010/0099968	A1	4/2010	Say et al.
2010/0099969	A1	4/2010	Say et al.
2010/0100077	A1	4/2010	Rush
2010/0100078	A1	4/2010	Say et al.
2010/0106001	A1	4/2010	Say et al.
2010/0118853	A1	5/2010	Godfrey
2010/0139672	A1	6/2010	Kroll et al.
2010/0160742	A1	6/2010	Seidl et al.
2010/0168659	A1	7/2010	Say et al.
2010/0179398	A1	7/2010	Say et al.
2010/0185055	A1	7/2010	Robertson
2010/0191073	A1	7/2010	Tarassenko et al.
2010/0210299	A1	8/2010	Gorbachov
2010/0222652	A1	9/2010	Cho
2010/0228113	A1	9/2010	Solosko
2010/0233026	A1	9/2010	Ismagliov et al.
2010/0234706	A1	9/2010	Gilland
2010/0234715	A1	9/2010	Shin
2010/0234914	A1	9/2010	Shen
2010/0245091	A1	9/2010	Singh
2010/0249881	A1	9/2010	Corndorf
2010/0256461	A1	10/2010	Mohamedali
2010/0259543	A1	10/2010	Tarassenko et al.
2010/0268048	A1	10/2010	Say et al.
2010/0268049	A1	10/2010	Say et al.
2010/0268050	A1	10/2010	Say et al.
2010/0274111	A1	10/2010	Say et al.
2010/0280345	A1	11/2010	Say et al.
2010/0280346	A1	11/2010	Say et al.
2010/0295694	A1	11/2010	Kauffman et al.
2010/0298668	A1	11/2010	Hafezi et al.
2010/0298730	A1	11/2010	Tarassenko et al.
2010/0299155	A1	11/2010	Findlay et al.
2010/0312188	A1	12/2010	Robertson et al.
2010/0312580	A1	12/2010	Tarassenko et al.
2010/0332443	A1	12/2010	Gartenberg
2011/0004079	A1	1/2011	Al-Ali et al.
2011/0009715	A1	1/2011	O'Reilly et al.
2011/0040203	A1	2/2011	Savage et al.
2011/0050431	A1	3/2011	Hood et al.
2011/0054265	A1	3/2011	Hafezi et al.
2011/0065983	A1	3/2011	Hafezi et al.
2011/0077660	A1*	3/2011	Janik et al. 606/129
2011/0081860	A1	4/2011	Brown et al.
2011/0105864	A1	5/2011	Robertson et al.
2011/0144470	A1	6/2011	Mazar et al.
2011/0237924	A1	9/2011	McGusty et al.
2011/0279963	A1	11/2011	Kumar et al.
2012/0024889	A1	2/2012	Robertson et al.
2012/0029309	A1	2/2012	Paquet et al.
2012/0083715	A1	4/2012	Yuen et al.
2012/0089000	A1	4/2012	Bishay et al.
2012/0101396	A1	4/2012	Solosko et al.
2012/0197144	A1	8/2012	Christ et al.
2012/0214140	A1	8/2012	Brynelsen et al.
2012/0265544	A1	10/2012	Hwang et al.
2012/0299723	A1	11/2012	Hafezi et al.
2012/0310070	A1	12/2012	Kumar et al.
2012/0316413	A1	12/2012	Liu et al.
2013/0030259	A1	1/2013	Thomsen et al.
2013/0057385	A1	3/2013	Murakami et al.
2013/0060115	A1	3/2013	Gehman et al.

FOREIGN PATENT DOCUMENTS

CN	201076456	6/2008
EP	0344939	12/1989
EP	1246356	10/2002
EP	1534054	5/2005
EP	1702553	9/2006
EP	1789128	5/2007
EP	2143369	1/2010
GB	2432862	6/2007
IL	172917	6/2010
JP	61017949	1/1986
JP	61072712	4/1986
JP	05-228128	9/1993
JP	H0646539	2/1994
JP	09-330159	12/1997
JP	10-14898	1/1998
JP	2000-506410	5/2000
JP	2002-224053	8/2002
JP	2002263185	9/2002
JP	2002291684	10/2002
JP	2004-7187	1/2004
JP	2004134384	4/2004
JP	2004-313242	11/2004
JP	2005-073886	3/2005
JP	2005-304880	4/2005
JP	2005124708	5/2005
JP	2005-532841	11/2005
JP	2005-532849	11/2005
JP	2006006377	1/2006
JP	2006509574	3/2006
JP	2006-177699	7/2006
JP	2006-187611	7/2006
JP	2006278091	10/2006
JP	2006346000	12/2006
JP	2007159631	6/2007
JP	2007-313340	12/2007
JP	2008011865	1/2008
JP	2008501415	1/2008
JP	2009-061236	3/2009
KR	20020015907	3/2002
KR	20020061744	7/2002
KR	200609977523	7/2006
KR	927471	11/2009
KR	10-2012-09995	9/2012
TW	553735	9/2003
TW	200724094	7/2007
WO	8802237	4/1988
WO	WO8802237	4/1988
WO	WO9308734	5/1993
WO	WO9319667	10/1993
WO	WO9401165	1/1994
WO	WO9714112	4/1997
WO	WO9739963	10/1997
WO	WO9843537	10/1998
WO	WO9937290	7/1999
WO	WO9959465	11/1999
WO	WO0033246	6/2000
WO	WO0100085	1/2001
WO	01/47466	7/2001
WO	WO0149364	7/2001
WO	WO0174011	10/2001
WO	WO0180731	11/2001
WO	WO0245489	6/2002
WO	WO02058330	7/2002
WO	WO02062276	8/2002
WO	WO02087681	11/2002
WO	WO02095351	11/2002
WO	WO03005877	1/2003
WO	WO03050643	6/2003
WO	WO03068061	8/2003
WO	WO2004014225	2/2004
WO	WO2004019172	3/2004
WO	WO2004039256	5/2004
WO	WO2004059551	7/2004
WO	WO2004066833	8/2004
WO	WO2004066834	8/2004
WO	WO2004066903	8/2004
WO	WO2004068748	8/2004
WO	WO2004068881	8/2004
WO	WO2004075751	9/2004
WO	WO2004109316	12/2004
WO	WO2005011237	2/2005
WO	2005/020023	3/2005

(56) **References Cited**

FOREIGN PATENT DOCUMENTS

WO	WO2005024687	3/2005
WO	WO2005041767	5/2005
WO	WO2005047837	5/2005
WO	WO2005051166	6/2005
WO	WO2005053517	6/2005
WO	WO2005082436	9/2005
WO	WO2005083621	9/2005
WO	WO2005110238	11/2005
WO	WO2006021932	3/2006
WO	WO2006027586	3/2006
WO	WO2006028347	3/2006
WO	WO 2006028347 A1 *	3/2006
WO	WO2006035351	4/2006
WO	2006/055892	5/2006
WO	2006/055956	5/2006
WO	WO2006046648	5/2006
WO	WO2006075016	7/2006
WO	WO2006100620	9/2006
WO	2006/104843	10/2006
WO	WO2006109072	10/2006
WO	2006/116718	11/2006
WO	2006/127355	11/2006
WO	WO2006119345	11/2006
WO	2007/001724	1/2007
WO	2007/001742	1/2007
WO	2007/013952	2/2007
WO	2007/014084	2/2007
WO	2007/021496	2/2007
WO	WO2007014527	2/2007
WO	2007/027660	3/2007
WO	2007/028035	3/2007
WO	WO2007028035	3/2007
WO	2007036741	4/2007
WO	2007036746	4/2007
WO	WO2007036687	4/2007
WO	WO2007036741	4/2007
WO	WO2007036746	4/2007
WO	WO2007040878	4/2007
WO	WO2007067054	6/2007
WO	WO2007071180	6/2007
WO	WO2007096810	8/2007
WO	WO2007101141	9/2007
WO	WO2007115087	10/2007
WO	WO2007120946	10/2007
WO	2007130491	11/2007
WO	WO2007127316	11/2007
WO	WO2007127879	11/2007
WO	WO2007127945	11/2007
WO	WO2007128165	11/2007
WO	WO2007133526	11/2007
WO	2007/149546	12/2007
WO	WO2007143535	12/2007
WO	2008/008281	1/2008
WO	WO2008012700	1/2008
WO	WO2008030482	3/2008
WO	2008/052136	5/2008
WO	2008/063626	5/2008
WO	WO2008061138	5/2008
WO	2008/066617	6/2008
WO	WO2008076464	6/2008
WO	WO2008089232	7/2008
WO	WO2008091683	7/2008
WO	2008/095183	8/2008
WO	2008/101107	8/2008
WO	WO2008097652	8/2008
WO	2008/112577	9/2008
WO	2008/112578	9/2008
WO	2008120156	10/2008
WO	WO2008133394	11/2008
WO	WO2008134185	11/2008
WO	2009001108	12/2008
WO	WO2008150633	12/2008
WO	WO2009001108	12/2008
WO	WO2009006615	1/2009
WO	WO2009029453	3/2009
WO	WO2009036334	3/2009
WO	WO2009051829	4/2009
WO	WO2009051830	4/2009
WO	WO2009063377	5/2009
WO	WO2009081348	7/2009
WO	WO2009111664	9/2009
WO	WO2009146082	12/2009
WO	WO2010000085	1/2010
WO	WO2010009100	1/2010
WO	WO2010011833	1/2010
WO	2010019778	2/2010
WO	2010057049	5/2010
WO	WO2010075115	7/2010
WO	WO2010080765	7/2010
WO	WO2010080843	7/2010
WO	WO2010107563	9/2010
WO	WO2010115194	10/2010
WO	WO2010132331	11/2010
WO	WO2010135516	11/2010
WO	WO2011068963	6/2011
WO	WO2011133799	10/2011
WO	WO2011159336	12/2011
WO	WO2011159337	12/2011
WO	WO2011159338	12/2011
WO	WO2011159339	12/2011
WO	WO2012104657	8/2012
WO	WO2012158190	11/2012
WO	WO2013012869	1/2013

OTHER PUBLICATIONS

Rolison, D. R. et al., "Electrically conductive oxide aerogels: new materials in electrochemistry", J. Mater. Chem., 2001, 11, 963-980.*

Kendle, Earl R. and Morris, Larry A., "Preliminary Studies in the Development of a Gastric Battery for Fish" (1964). Nebraska Game and Parks Commission White Papers, Conference Presentations, & Manuscripts. Paper 22. p. 1-6.*

"Smartlife awarded patent for knitted transducer" Innovation in Textiles News: http://www.innovationintextiles.com/articles/208.php; 2pp. (2009).

Mackay et al., Radio telemetering from within the body: Inside information is revealed by tiny transmitters that can be swallowed or implanted in man or animal. Science 1961;134(3486):1196-1202.

Mackay et al,. Endoradiosonde. Nature 1957;179(4572):1239-40, 179.

Zworkin, A 'radio pill.' Nature 1957;179:898.

Yao et al., Low Power Digital Communication in Implantable Devices Using Volume Conduction of Biological Tissues. Proceedings of the 28th IEEE, EMBC Annual International Conference 2006 (Aug. 30-Sep. 3); New York, USA.

Mckenzie et al., Validation of a new telemetric core temperature monitor. J. Therm. Biol. 2004;29(7-8):605-11.

Tatbul et al., Confidence-based data management for personal area sensor networks. ACM International Conference Proceeding Series 2004;72.

Zimmerman, Personal Area Networks: Near-field intrabody communication. IBM Systems Journal 1996;35 (3-4):609-17.

Mini Mitter Co, Inc. 510(k) Premarket Notification Mini-Logger for Diagnostic Spirometer. Sep. 21, 1999.

Philips Respironics. 510(k) Premarket Notification for VitalSense. Apr. 22, 2004.

Mini Mitter Co, Inc. Actiheart. Traditional 510(k) Summary. Sep. 27, 2005.

Mini Mitter Co, Inc. VitalSense Integrated Physiological Monitoring System. Product Description.

Mini Mitter Co, Inc. VitalSense—Wireless Vital Signs Monitoring. Temperatures.com Mar. 31, 2009.

Mini Mitter Co, Inc. Noninvasive technology to help your studies succeed. Mini Mitter.com Mar. 31, 2009.

Barrie, Heidelberg pH capsule gastric analysis. Textbook of Natural Medicine, 1992, Pizzorno, Murray & Barrie.

Carlson et al., Evaluation of a non-invasive respiratory monitoring system for sleeping subjects. Physiological Measurement 1999;20(1):53.

(56) **References Cited**

OTHER PUBLICATIONS

Mojaverian et al., Estimation of gastric residence time of the Heidelberg capsule in humans: effect of varying food composition. Gastroenterology 1985;89(2):392-7.
Xiaoming et al., A telemedicine system for wireless home healthcare based on bluetooth and the internet. Telemedicine Journal and e-health 2004;10(S2):S110-6.
Arshak et al., A Review and Adaptation of Methods of Object Tracking to Telemetry Capsules IC-Med (2007) vol. 1, No. 1, Issue 1, pp. 35 of 46.
"ASGE Technology Status Evaluation Report: wireless capsule endoscopy" American Soc. for Gastrointestinal Endoscopy (2006) vol. 63, No. 4; 7 pp.
Aydin et al., "Design and implementation considerations for an advanced wireless interface in miniaturized integrated sensor Microsystems" Sch. of Eng. & Electron., Edinburgh Univ., UK; (2003); abstract.
Brock, "Smart Medicine: The Application of Auto-ID Technology to Healthcare" Auto-ID Labs (2002) http://www.autoidlabs.org/uploads/media/MIT-AUTOID-WH-010.pdf.
Delvaux et al., "Capsule endoscopy: Technique and indications" Clinical Gastoenterology (2008) vol. 22, Issue 5, pp. 813-837.
Fawaz et al., "Enhanced Telemetry System using CP-QPSK Band-Pass Modulation Technique Suitable for Smart Pill Medical Application" IFIP IEEE Dubai Conference (N.D.); http://www.asic.fh-offenburg.de/downloads/ePille/IFIP_IEEE_Dubai_Conference.pdf.
Given Imaging, "Agile Patency Brochure" http://www.inclino.no/documents/AgilePatencyBrochure_Global_GMB-0118-01.pdf;(N.D.) 4pp.
Gonzalez-Guillaumin et al., "Ingestible capsule for impedance and pH monitoring in the esophagus" IEEE Trans Biomed Eng. (2007) 54(12: 2231-6; abstract.
Greene, "Edible RFID microchip monitor can tell if you take your medicine" Bloomberg Businessweek (2010) 2 pp.; http://www.businessweek.com/idg/2010-03-31/edible-rfid-microchip-monitor-can-tell-if-you-take-your-medicine.html.
Melanson, "Walkers swallow RFID pills for science" Engadget (2008); http://www.engadget.com/2008/07/29/walkers-swallow-rfid-pills-for-science/.
"New 'smart pill' to track adherence" E-Health-Insider (2010) http://www.e-health-insider.com/news/5910/new_'smart_pill'_monitors_medicines.
"RFID "pill" monitors marchers" RFID News (2008) http://www.rfidnews.org/2008/07/23/rfid-pill-monitors-marchers/.
"SensiVida minimally invasive clinical systems" Investor Presentation Oct. 2009 28pp; http://www.sensividamedtech.com/SensiVidaGeneralOctober09.pdf.
Shrivas et al., "A New Platform for Bioelectronics-Electronic Pill", Cummins College, N.D.; http://www.cumminscollege.org/downloads/electronics_and_telecommunication/Newsletters/Current%20Newsletters.pdf.
"The SmartPill Wireless Motility Capsule" SmartPill, The Measure of GI Health; http://www.smartpillcorp.com/index.cfm?pagepath=Products/The_SmartPill_Capsule&id=17814.
Solanas et al., "RFID Technology for the Health Care Sector" Recent Patents on Electrical Engineering (2008) 1, 22-31.
Swedberg, "University Team Sees Ingestible RFID Tag as a Boon to Clinical Trials" RFID Journal Apr. 27, 2010; http://www.rfidjournal.com/article/view/7560/1.
University of Florida News "Rx for health: Engineers design pill that signals it has been swallowed" (2010) 2pp.; http://news.ufl.edu/2010/03/31/antenna-pill-2/.
Intromedic, MiroCam Innovative Capsule Endoscope Pamphlet. 8 pages. (http://www.intromedic.com/en/product/productInfo.asp).
Mini Mitter Co, Inc. 510(k) Premarket Notification for VitalSense. Apr. 22, 2004.
Hotz "The Really Smart Phone" The Wall Street Journal, What They Know (2011); 6 pp.
ISFET—Ion Sensitive Field-Effect Transistor; Microsens S.A. pdf document. pp. 1-4.
Walkey, "MOSFET Struture and Processing"; 97.398* Physical Electronics Lecture 20; pp. 1-24.
Description of ePatch Technology Platform for ECG and EMG, located it http://www.madebydelta.com/imported/images/DELTA_Web/documents/ME/ePatch_ECG_EMG.pdf, Dated Sep. 2, 2010.
Coury, L. "Conductance Measurement Part 1: Theory"; Current Separations, 18:3 (1999) p. 91-96.
Watson, et al., "Determination of the relationship between the pH and conductivity of gastric juice" Physiol Meas. 17 (1996) pp. 21-27.
Gilson, D.R. "Molecular dynamics simulation of dipole interactions", Department of Physics, Hull University, Dec. 2002, p. 1-43.
Li, P-Y, et al. "An electrochemical intraocular drug delivery device", Sensors and Actuators A 143 (2008) p. 41-48.
NPL_AntennaBasics.pdf, p. 1-3.
Santini, J.T. et al, "Microchips as controlled drug delivery-devices", Agnew. Chem. Int. Ed. 2000, vol. 39, p. 2396-2407.
Shawgo, R.S. et al. "BioMEMS from drug delivery", Current Opinion in Solid State and Material Science 6 (2002), p. 329-334.
Soper, S.A. et al. "Bio-Mems Technologies and Applications", Chapter 12, "MEMS for Drug Delivery", p. 325-346.
Tierney, M.J. et al "Electroreleasing Composite Membranes for Delivery of Insulin and other Biomacromolecules", J. Electrochem. Soc., vol. 137, No. 6, Jun. 1990, p. 2005-2006.
Heydari et al., "Analysis of the PLL jitter due to power/ground and substrate noise"; IEEE Transactions on Circuits and Systems (2004) 51(12): 2404-16.
Sanduleanu et al., "Octave tunable, highly linear, RC-ring oscillator with differential fine-coarse tuning, quadrature outputs and amplitude control for fiber optic transceivers" (2002) IEEE MTT-S International Microwave Symposium Digest 545-8.
Tajalli et al., "Improving the power-delay performance in subthreshold source-coupled logic circuits" Integrated Circuit and System Design. Power and Timing Modeling, Optimization and Simulation, Springer Berlin Heidelberg (2008) 21-30.
Yang et al., "Fast-switching frequency synthesizer with a discriminator-aided phase detector" IEEE Journal of Solid-State Circuits (2000) 35(10): 1445-52.
Bohidar et al., "Dielectric Behavior of Gelatin Solutions and Gels" Colloid Polym Sci (1998) 276:81-86.
Dhar et al., "Electroless nickel plated contacts on porous silicon" Appl. Phys. Lett. 68 (10) pp. 1392-1393 (1996).
Eldek A., "Design of double dipole antenna with enhanced usable bandwidth for wideband phased array applications" Progress in Electromagnetics Research PIER 59, 1-15 (2006).
Ferguson et al., "Dialectric Constant Studies III Aqueous Gelatin Solutions" J. Chem. Phys. 2, 94 (1934) p. 94-98.
Furse C. M., "Dipole Antennas" J. Webster (ed). Wiley Encyclopedia of Electrical and Electronics Engineering (1999) p. 575-581.
Given Imaging, "Agile Patency Brochure" (2006) http://www.inclino.no/documents/AgilePatencyBrochure_Global_GMB-0118-01.pdf; 4pp.
ISFET—Ion Sensitive Field-Effect Transistor; Microsens S.A. pdf document. First cited by Examiner in Office Action dated Jun. 13, 2011 for U.S. Appl. No. 12/238,345; 4pp.
Intromedic, MicroCam Innovative Capsule Endoscope Pamphlet. (2006) 8 pp (http://www.intromedic.com/en/product/productinfo.asp).
Kamada K., "Electrophoretic deposition assisted by soluble anode" Materials Letters 57 (2003) 2348-2351.
NPL_AntennaBasics.pdf, Radio Antennae, http://www.erikdeman.de/html/sail018h.htm; (2008) 3pp.
O'Brien et al., "The Production and Characterization of Chemically Reactive Porous Coatings of Zirconium Via Unbalanced Magnetron Sputtering" Surface and Coatings Technology (1996) 86-87; 200-206.
Roulstone, et al., "Studies on Polymer Latex Films: I. A study of latex film morphology" Polymer International 24 (1991) pp. 87-94.
Shin et al., "A Simple Route to Metal Nanodots and Nanoporous Metal Films"; Nano Letters, vol. 2, No. 9 (2002) pp. 933-936.
Soper, S.A. et al. "Bio-Mems Technologies and Applications", Chapter 12, "MEMS for Drug Delivery", p. 325-346 (2007).

(56) **References Cited**

OTHER PUBLICATIONS

U.S. Appl. No. 12/238,345, filed Sep. 25, 2008, Hooman et al., Non-Final Office Action mailed Jun. 13, 2011 22pp.
Walkey, "MOSFET Structure and Processing"; 97.398* Physical Electronics Lecture 20; First cited by Examiner in Office Action dated Jun. 13, 2011 for U.S. Appl. No. 12/238,345; 24 pp.
Wongmanerod et al., "Determination of pore size distribution and surface area of thin porous silicon layers by spectroscopic ellipsometry" Applied Surface Science 172 (2001) 117-125.
"PALO Bluetooth Baseband" PALO Bluetooth Resource Center (2002) Retrieved from internet Dec. 12, 2012 at URL:http://palowireless.com/bluearticles/baseband.asp; first cited in Office Action dated Jan. 17, 2013 for EP08853901.0.
Trutag, Technologies, Inc., Spectral Microtags for Authentication and Anti-Counterfeiting; "Product Authentication and Brand Protection Solutions"; http://www.trutags.com/; downloaded Feb. 12, 2013; 1 pp.
Lin et al., "Do Physiological Data Relate to Traditional Usability Indexes?" Proceedings of OZCHI 2005, Canberra, Australia (2005) 10 pp.
Mandryk et al., "A physiological approach for continuously modeling user emotion in interactive play environments" Proceedings of Measuring Behavior (2008) (Maastrichtm the Netherlandsm Aug. 26-29) 2 pp.
Mandryk et al., "Objectively Evaluating Entertainment Technology" Simon Fraser University; CHI (2004) ACM 1-58113-703-6/04/0004; 2 pp.
Baskiyar, S. "A Real-time Fault Tolerant Intra-body Network" Dept. of Comp. Sci & Soft Eng; Auburn University; Proceedings of the 27th Annual IEEE Conference; 0742-1303/02 (2002) IEEE; 6 pp.
Hotz "The Really Smart Phone" The Wall Street Journal, What They Know (2011); 6 pp.; http://online.wsj.com/article/SB10001424052748704547604576263261679848814.html?mod=djemTECH_t.
Evanczuk, S., "PIC MCU software library uses human body for secure communications link" EDN Network; edn.com; Feb. 26, 2013 Retrieved from Internet Jun. 19, 2013 at http://www.edn.com/electronics-products/other/4407842/PIC-MCU-software-library-uses-human-body-for-secure-communications-link; 5 pp.
Gaglani S. "Put Your Phone, or Skin, on Vibrate" MedGadget (2012) http://medgadget.com/2012/03/put-your-phone-or-skin-on-vibrate.html 8pp.
Halthion Medical Technologies "Providing Ambulatory Medical Devices Which Monitor, Measure and Record" webpage. Online website: http://www.halthion.com/; downloaded May 30, 2012.
Jimbo et al., "Gastric-fluid-utilized micro battery for micro medical devices" The Sixth International Workshop on Micro and Nanotechnology for Power Geneartion and Energy Conservation Applications, (2006) pp. 97-100.
Jung, S. "Dissolvable 'Transient Electronics' Will Be Good for Your Body and the Environment" MedGadget; Oct. 1, 2012; Onlne website: http://medgadget.com/2012/10/dissolvable-transient-electronics-will-be-good-for-your-body-and-the-environment.html; downloaded Oct. 24, 2012; 4 pp.
Platt, D., "Modulation and Deviation" AE6EO, Foothills Amateur Radio Society; Oct. 26, 2007; 61 pp.
Winter, J. et al. "The material properties of gelatin gels"; USA Ballistic Research Laboratories, Mar. 1975, p. 1-157.
Kim et al., "A Semi-Interpenetrating Network System for a Polymer Membrane"; Eur. Polym. J. vol. 33 No. 7; pp. 1009-1014 (1997).

* cited by examiner

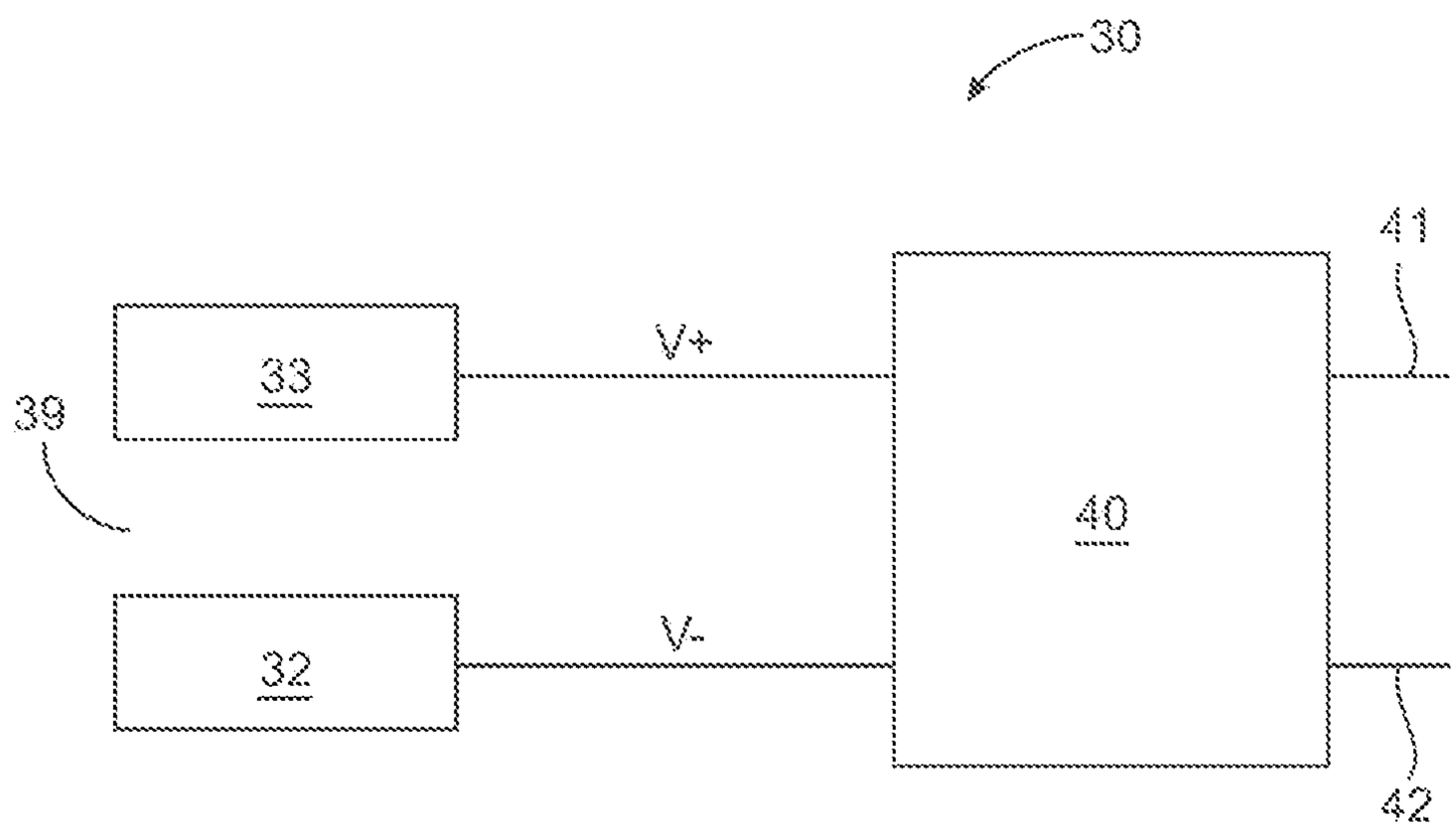

FIG. 1

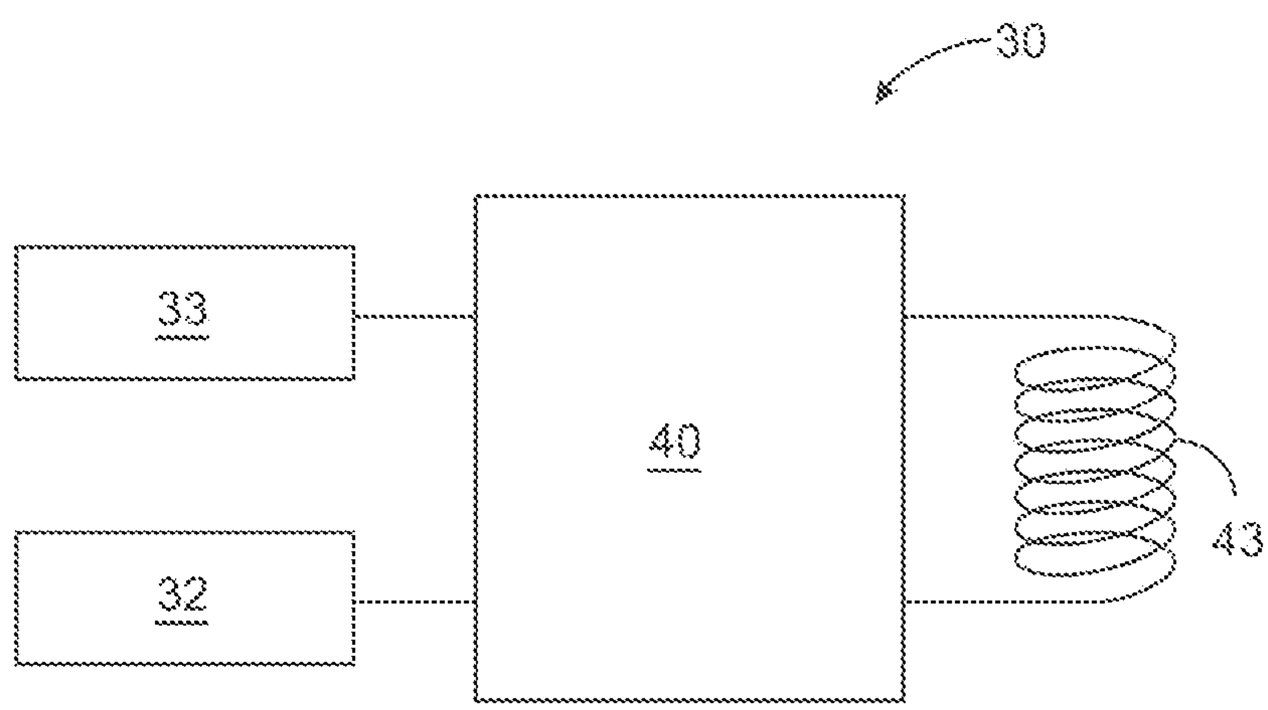

FIG. 2

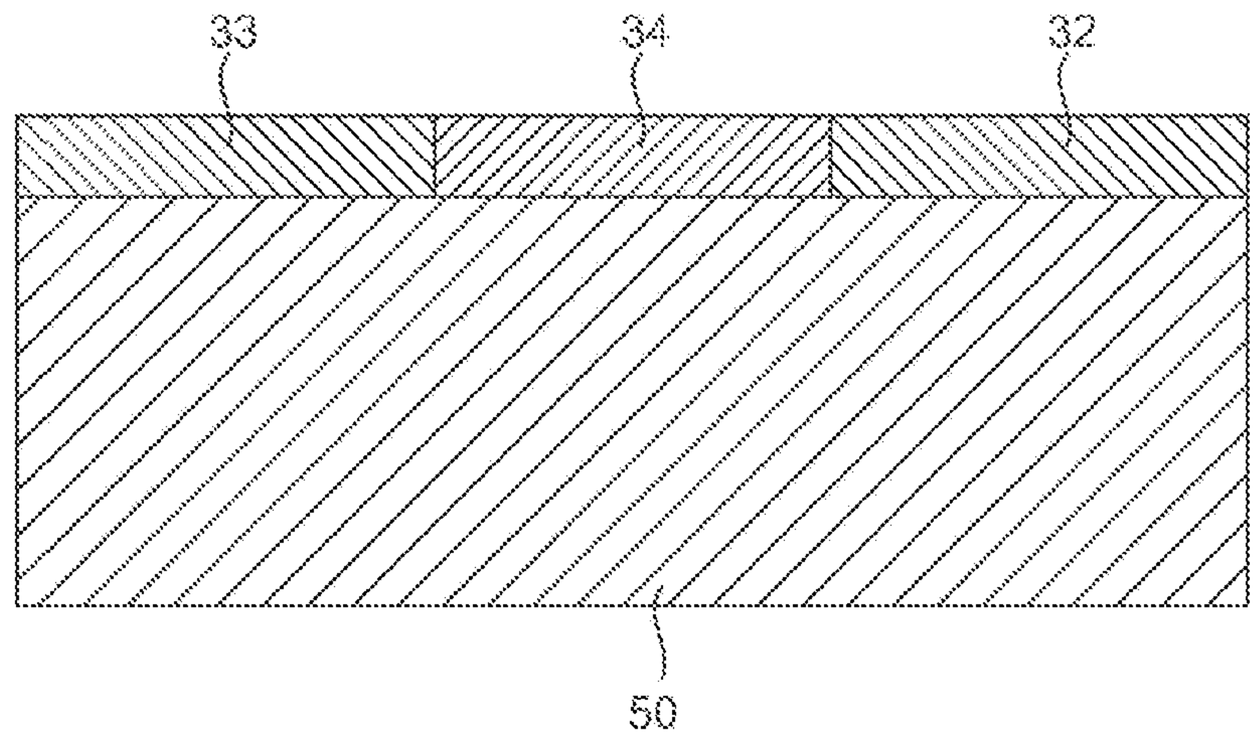

FIG. 3

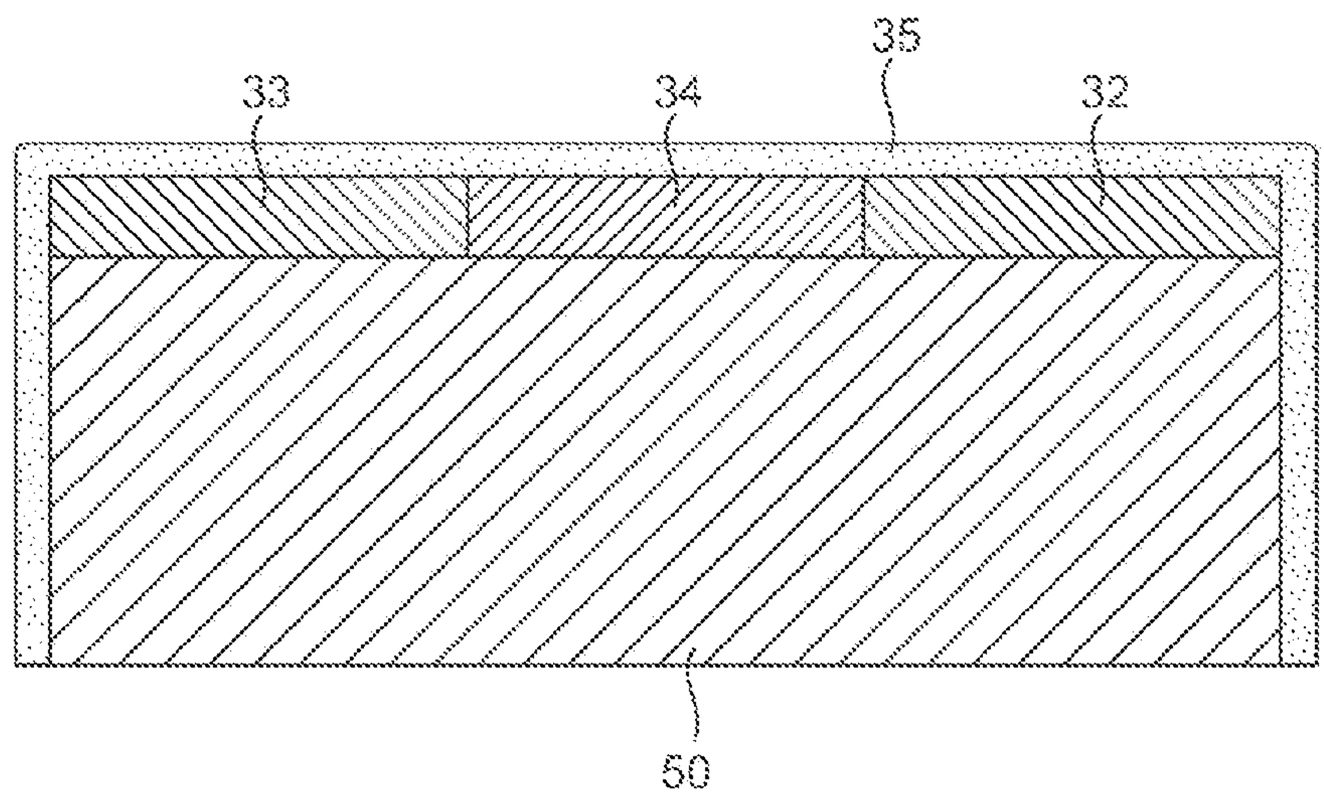

FIG. 4

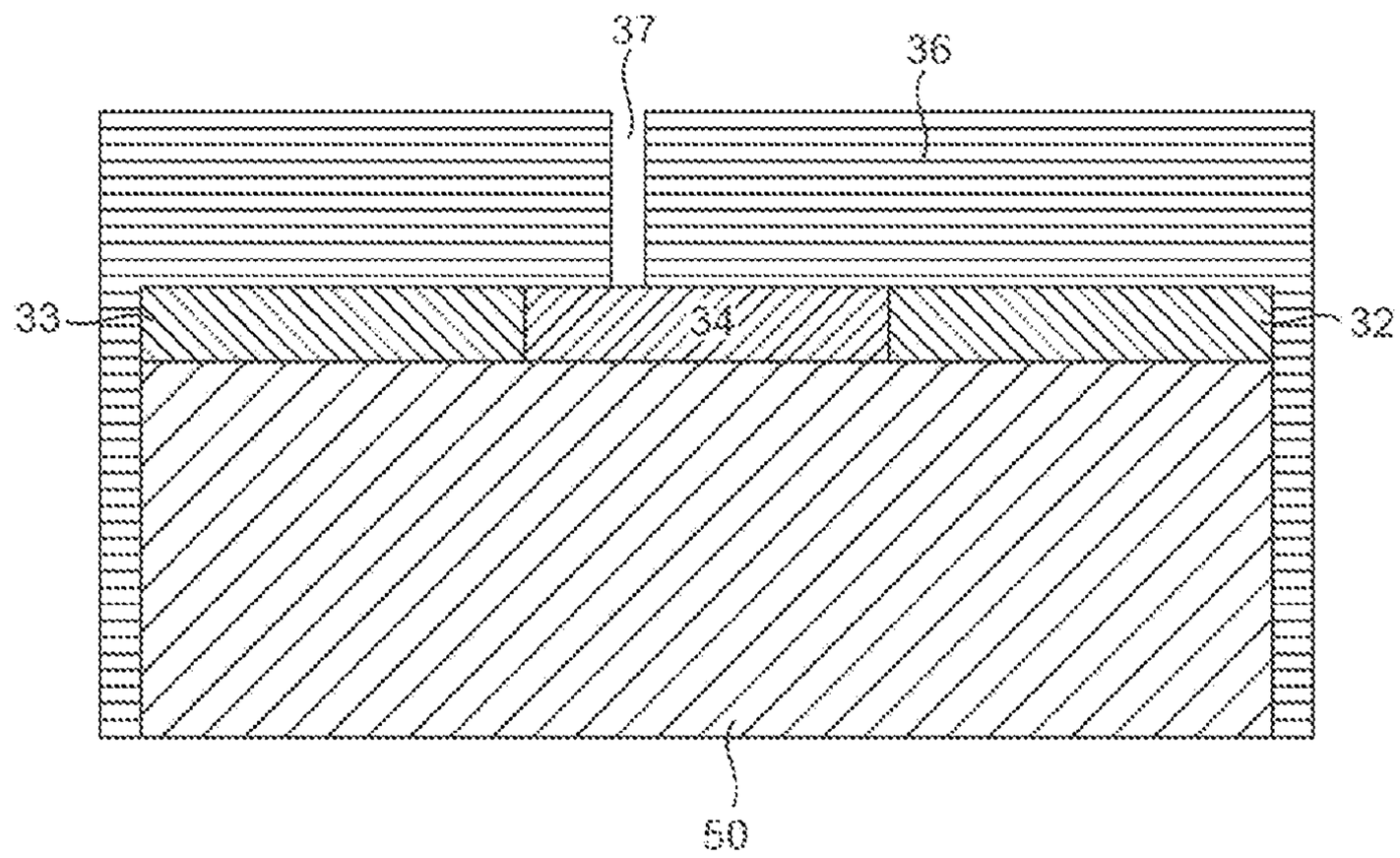

FIG. 5

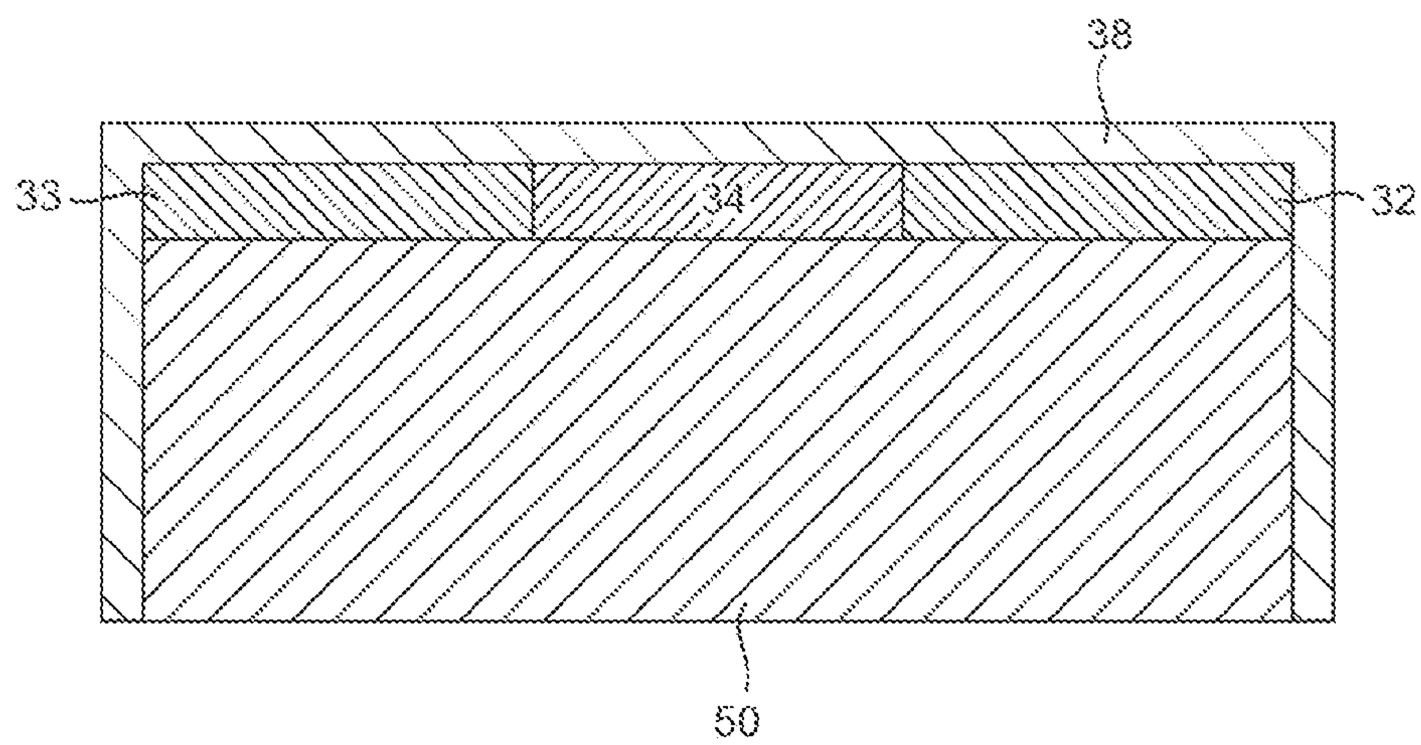

FIG. 6

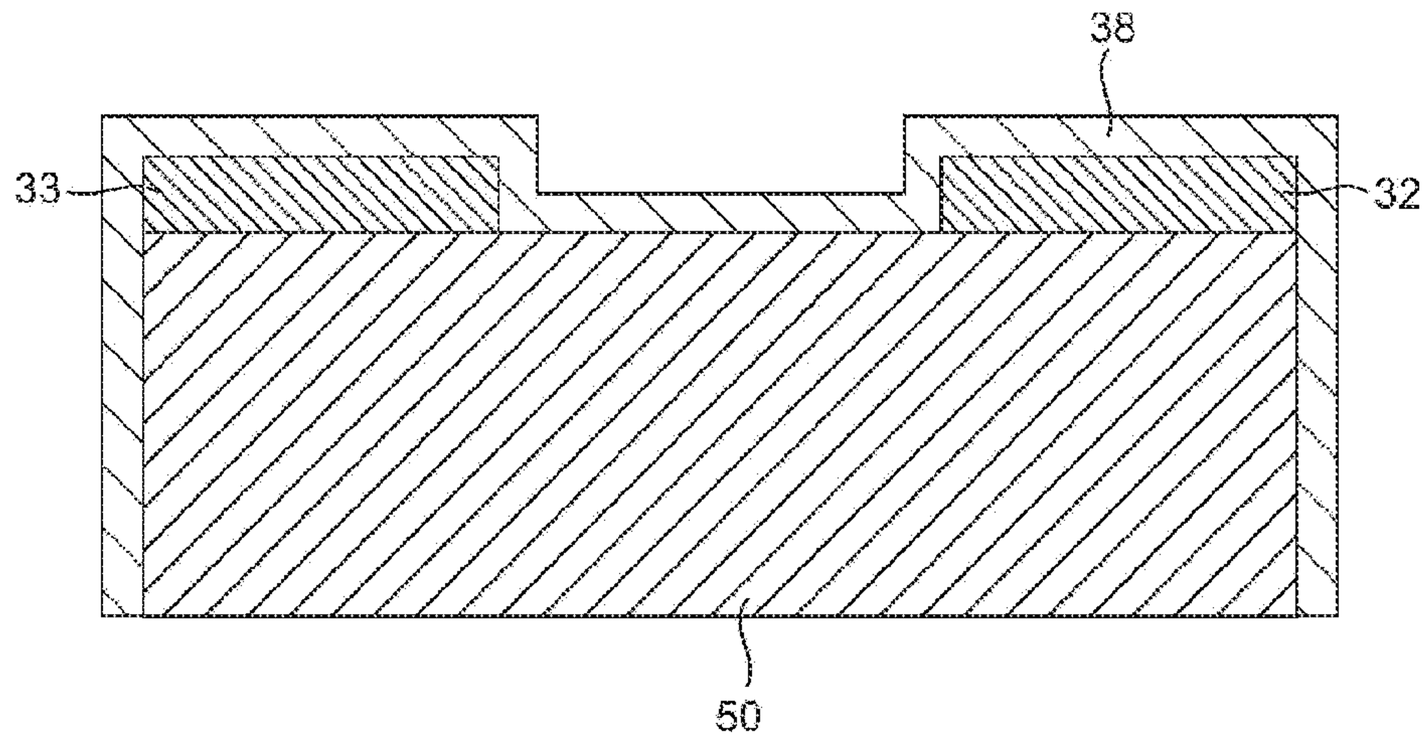

FIG. 7

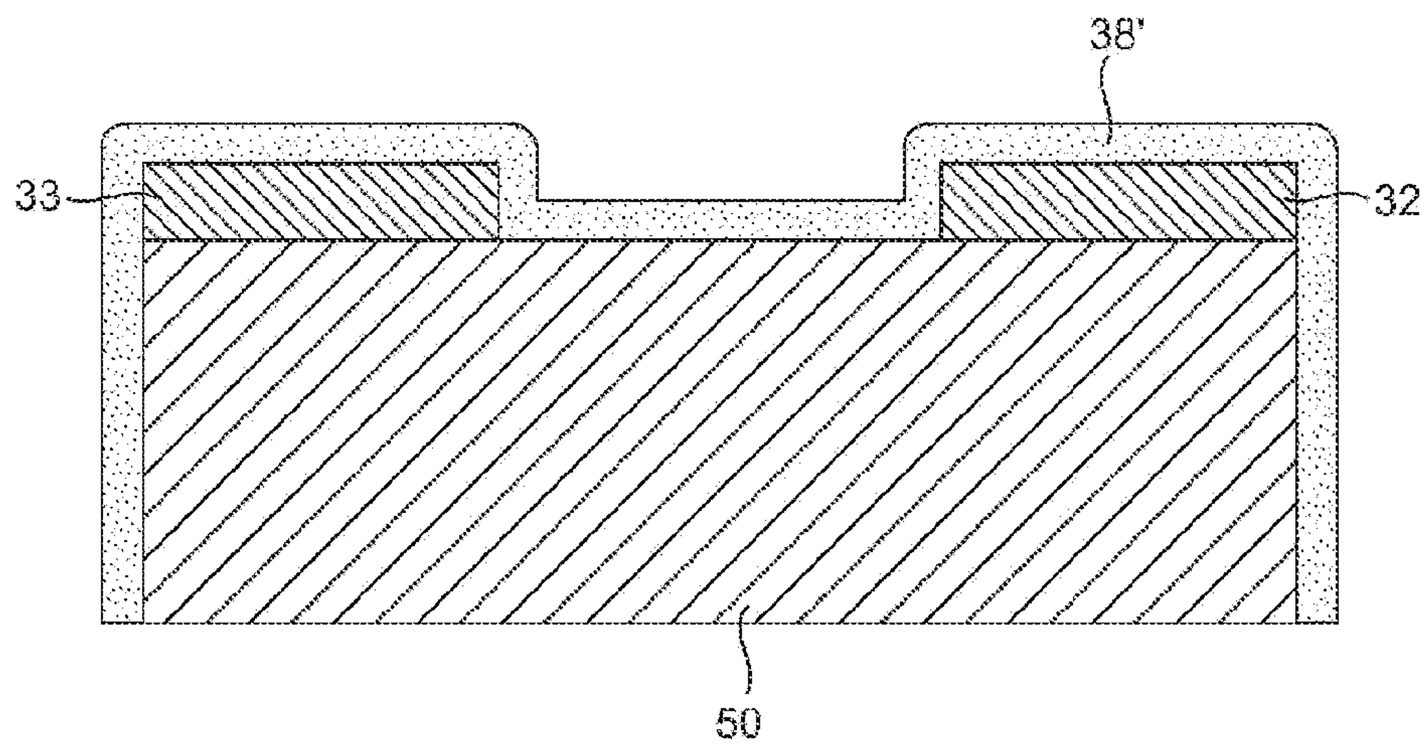

FIG. 8

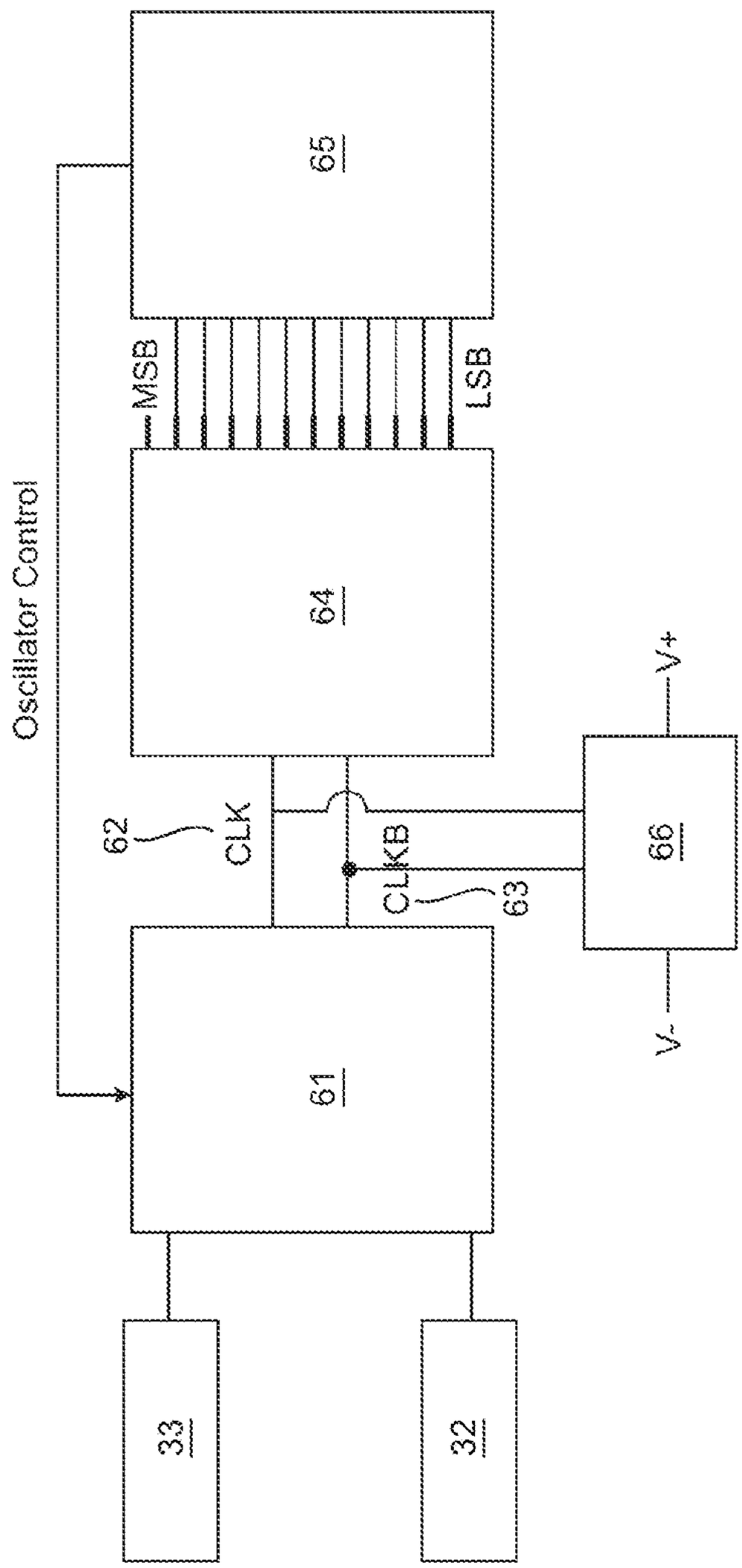

FIG. 9

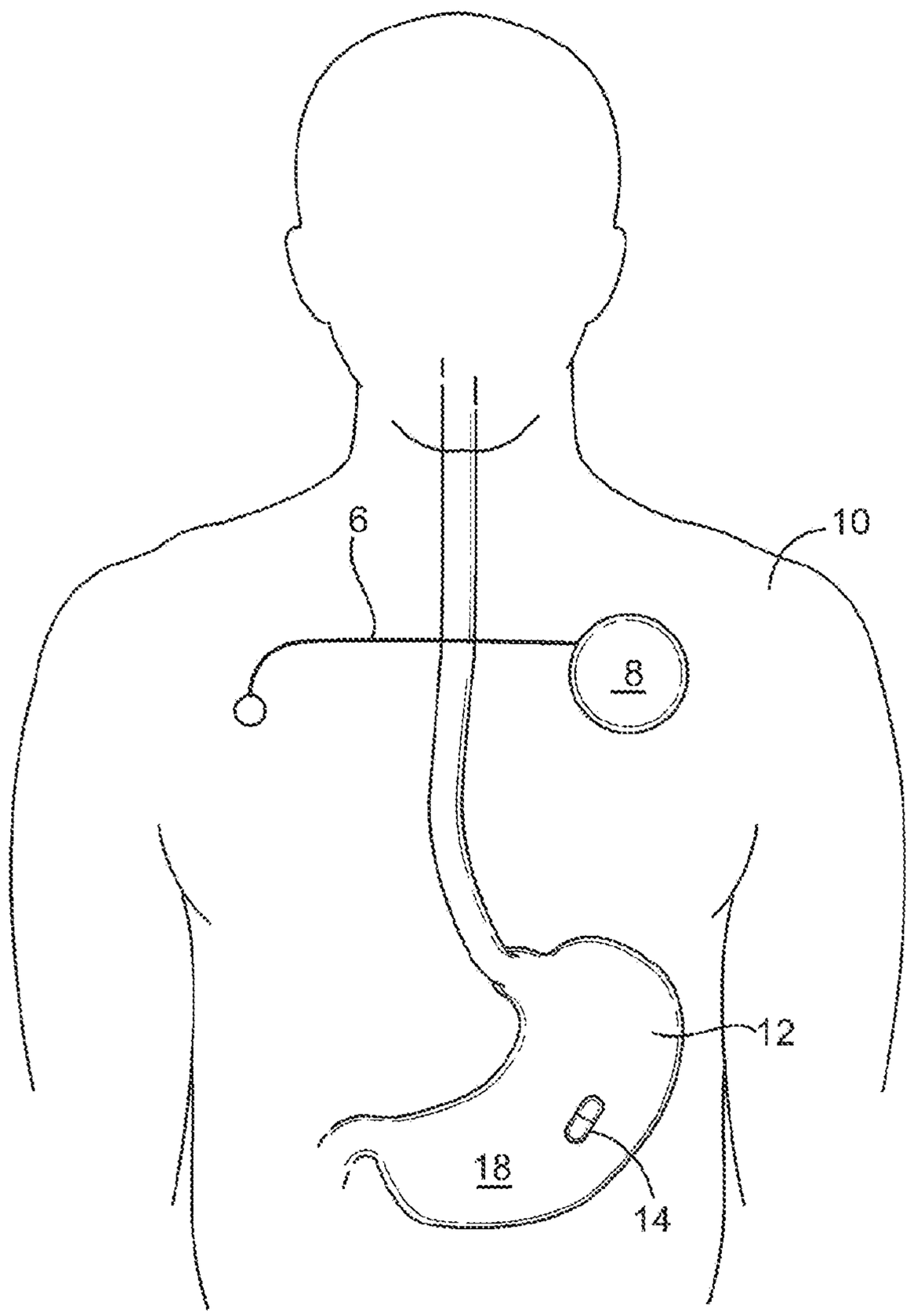

FIG. 10

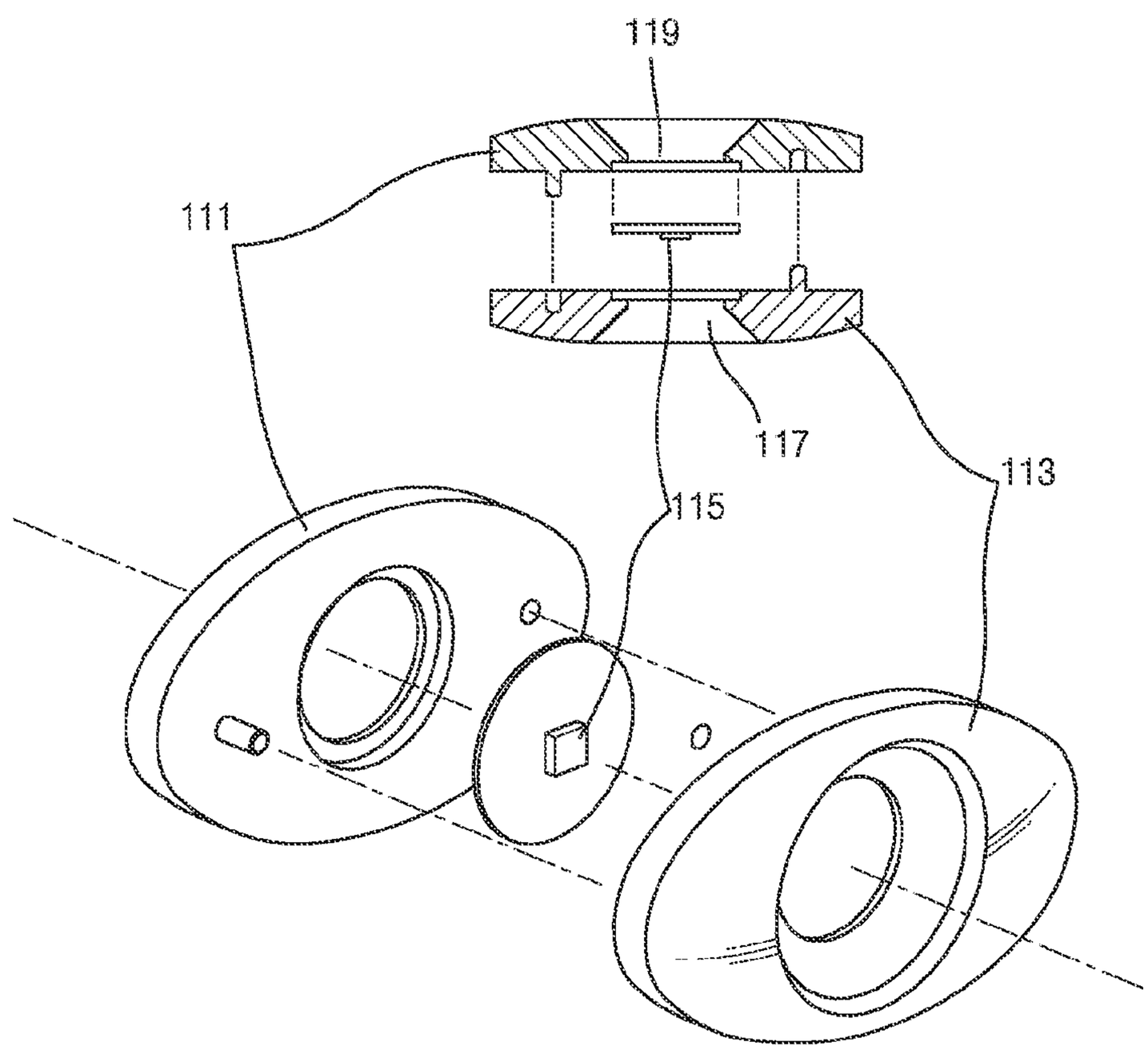

FIG. 11

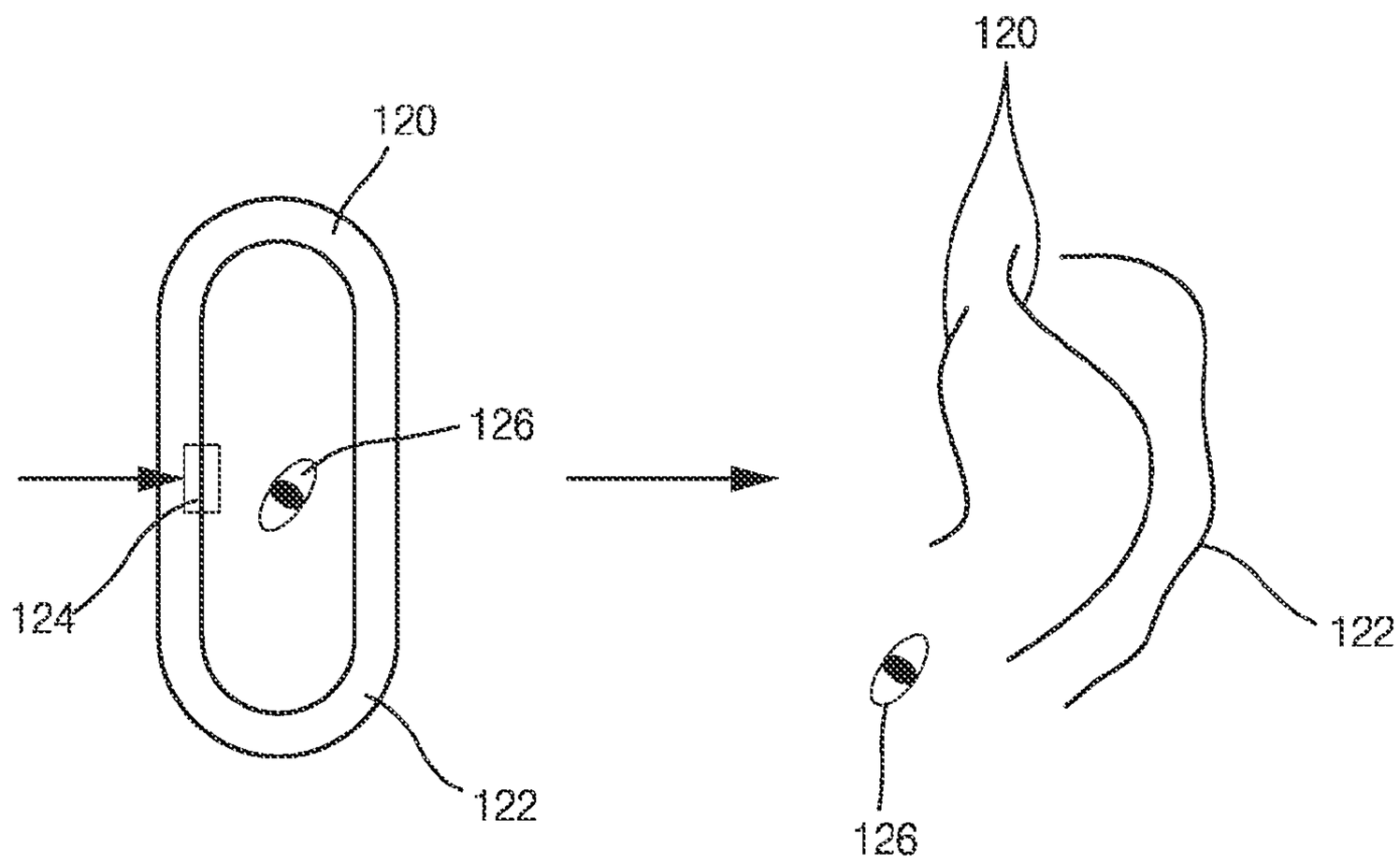

FIG. 12

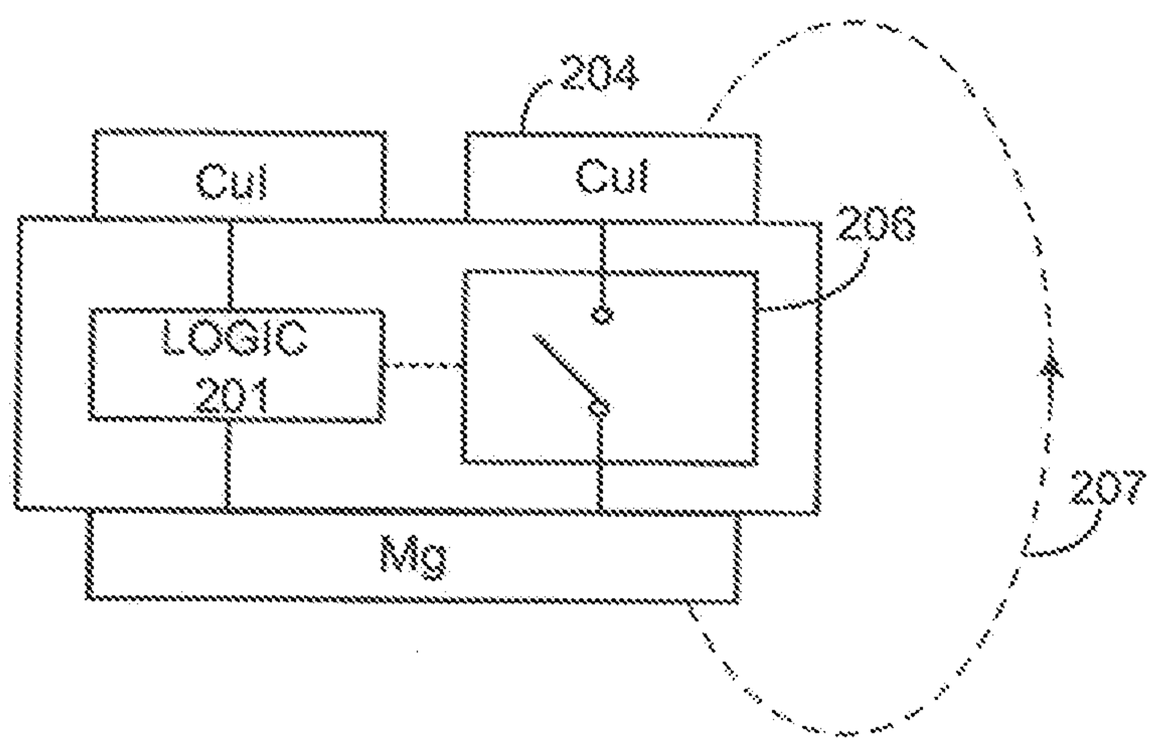

FIG. 13

CONTROLLED ACTIVATION INGESTIBLE IDENTIFIER

CROSS-REFERENCE TO RELATED APPLICATIONS

Pursuant to 35 U.S.C. §119 (e), this application claims priority to the filing date of: U.S. Provisional Patent Application Ser. No. 60/862,925 filed Oct. 25, 2006 the disclosure of which application is herein incorporated by reference.

INTRODUCTION

Prescription medications are effective remedies for many patients when taken properly, e.g., according to instructions. However, studies have shown that, on average, about 50% of patients do not comply with prescribed medication regimens. A low rate of compliance with medication regimens results in a large number of hospitalizations and admissions to nursing homes every year. In the United States alone, it has recently been estimated that the cost to the resulting from patient non-compliance is reaching $100 billion annually.

Consequently, various methods and apparatus have been made available to improve patient compliance with prescribed regimens in efforts to improve patient health. To date, many different types of "smart" packaging devices have been developed. In some cases, such devices automatically dispense the appropriate pill. In other cases, there are electronic controls that detect and record when the pill is taken out of the box.

While devices and protocols have been developed for improving patient compliance, there is continued interest in the development of new ways of monitoring patient compliance. It would be an important advancement in clinical medicine if the actual administration and ingestion of a pharmaceutical, such as a pill being dissolved in the stomach, could be monitored in an automatic and accurate manner without dependence on patient or medical staff reporting, where the signal generated by the identifier in the composition is produced upon contact of the composition with a target location.

One system that meets the above needs is the pharma-informatics system described in PCT application serial no. PCT/US2006/016370 filed on Apr. 28, 2006 and published as WO 2006/116718, the disclosure of which is herein incorporated by reference. While the system described in this application provides for many benefits, reliability of signal generation can be an issue under certain situations. For example, depending on how the pharmaceutical composition is ingested, the particular contents of the stomach can have a significant impact on how the identifier in the composition activates. For example, signal generation can be affected by the liquid with which a composition is ingested, e.g., water, juice, etc.

As such, of interest would be the development of an improved pharma-informatics system in which the activation of the identifier was highly controlled, such that the signal generated by the identifier would be independent of the particularly environment, e.g., stomach contents, the target site where activation is desired. The present invention provides, for the first time, such a capability.

SUMMARY

The present invention provides for the controlled activation of ingestible identifiers, e.g., as may be incorporated into pharma-informatics enabled pharmaceutical compositions, as may be present in ingestible event markers, etc. Embodiments of the controlled activation identifiers of the invention provide for robust and reliable use despite the presence of variable conditions in the applications in which they are employed, e.g., inadequate degradation of a pharmaceutical carrier, variations in the environment of the target site of interest, etc.

The controlled activation identifiers of the invention are identifiers that are activated upon association with a target site of a body. The controlled activation identifier is one that is activated by the presence of a predetermined specific stimulus at the target site, e.g., liquid (wetting), time, pH, ionic strength, conductivity, presence of biological molecules (e.g., specific proteins or enzymes that are present in the stomach, small intestine, colon), blood, temperature, specific auxiliary agents (foods ingredients such as fat, salt, or sugar, or other pharmaceuticals whose co-presence is clinically relevant), bacteria in the stomach, pressure, light, etc. The predetermined specific stimulus is a known stimulus for which the controlled activation identifier is designed or configured to respond by activation. In certain embodiments, the signal generated by the identifier is independent of the environment of the target site, e.g., the nature of the fluid at the target site.

The controlled activation identifier includes a controlled activation element that may include one or more components, where the one or more components provide for the desired controlled activation in response to the presence of the predetermined specific stimulus at the target site. In certain embodiments, the controlled activation identifier includes a dried conductive medium precursor composition (e.g., a dried salt composition) as the controlled activation element, where this element, upon contact with a fluid (such as stomach fluid), produces a conductive medium resulting in activation of the power source and production of an identifying signal. The presence of the dried conductive medium precursor in the power source provides for a number of advantages, including the ability to obtain reliable activation of the identifier despite variations in the environment of the target site (e.g., variations in terms of stomach content composition), where activation of the identifier is desired. In yet other embodiments, the controlled activation identifier includes a barrier as the controlled activation element, e.g., in the form of a protective film, that is configured to provide for activation of the identifier upon association with the target site of interest. Other types of controlled activation elements include two or more components, such as a dried conductive medium and a barrier, e.g., as described in more detail below.

The broadcasted signal from the identifier may be received by another device, e.g., a receiver, either inside or near the body, which may then record that the identifier, e.g., one that is associated with one or more active agents and pharmaceutical composition, has in fact reached the target site.

BRIEF DESCRIPTION OF THE FIGURES

FIG. **1** shows diagrammatically the effects of the pill ingestion where some of the pill has eroded away.

FIG. **2** provides a similar arrangement to FIG. **1**, with a coil rather than two electrodes as the output.

FIGS. **3** to **8** provide different views of controlled activation batteries in accordance with different embodiments of the invention.

FIG. **9** provides detail of certain implementations of an electronic circuit of various embodiments of the invention.

FIG. **10** provides a diagrammatic, exemplary representation of the pill embodiment as part of system, in accordance with the present invention.

FIG. **11** provides two views of an open faced table format according to an embodiment of the invention.

FIG. **12** provides a schematic of an identifier encased in a disruptable controlled activation element according to an embodiment of the invention.

FIG. **13** shows one exemplary design of the driver circuit that uses split battery electrodes for transmission, in accordance with one embodiment of the present invention.

DETAILED DESCRIPTION

The controlled activation identifiers of the invention are identifiers that may be activated upon contact with the target site in response to a specific predetermined stimulus. In certain embodiments, controlled activation is provided despite wide variations in the compositional makeup of the target site. As such, the controlled activation identifier provides for reliable and robust data concerning contact of the composition with the target site in the body, where the provided data is substantially, if not completely, independent of any variations in the environment of the target site. Accordingly, despite wide variations in the composition make up of the target site, e.g., stomach, that may be encountered in using the subject identifiers, the identifiers provide for consistent and reliable signals that are not affected by the composition of the target site environment. The applications of this new information device and system are multi-fold and described in further detail in PCT application Serial No. US2006/016370 titled "Pharma-Informatics System," and published as WO 2006/116718, and U.S. Provisional application Ser. No. 60/949,223 and titled "Ingestible Event Marker"; the disclosure of which applications described therein are incorporated by reference, as well as in the applications reviewed below.

In further describing the invention in greater detail, embodiments of the compositions are reviewed first, followed by a discussion of systems including the subject compositions, methods of using the subject compositions and systems and various illustrative applications in which the compositions and methods find use. Also reviewed in greater detail below are kits that include the subject compositions.

Compositions

Embodiments of the invention include a controlled activation identifier, where the identifier may be associated with a carrier composition, e.g., a pharmaceutically acceptable vehicle, and may or may not be associated with one or more pharmaceutical active agents. In certain embodiments, the compositions are disrupted upon administration to a subject. As such, in certain embodiments, the compositions are physically broken, e.g., dissolved, degraded, eroded, etc., following delivery to a body, e.g., via ingestion, etc. The compositions of these embodiments are distinguished from devices that are configured to be ingested and survive transit through the gastrointestinal tract substantially, if not completely, intact.

As summarized above, the compositions include a controlled activation identifier and an active agent/carrier component. Each of these different components are reviewed separately in greater detail below.

Controlled Activation Identifiers

As summarized above, the compositions of the invention include controlled activation identifiers. The controlled activation identifiers of the present compositions may vary depending on the particular embodiment and intended application of the composition so long as they are activated (i.e., turned on) upon association with or contact with a target physiological location, e.g., stomach, small intestine, large intestine, etc. In certain embodiments, activation occurs in a manner that is substantially, if not completely, environment independent, but for the presence of the predetermined activating stimulus (e.g., fluid, chemical agent, light) that is present at the target site of interest. As such, the identifier may be an identifier that emits a signal when it contacts a target body (i.e., physiological) site, where the nature of the signal is not substantially affected, if affected at all, by the particular makeup of the environment of the target site, apart from the presence of the actual activating stimulus. For example, if the target site is the stomach, the activation of the identifier will be substantially if not completely the same under a variety of different stomach content conditions, e.g., pH variations ranging from about 1 to about 8, etc., where apart from the presence of the fluid stimulus (the activator being activated by wetting) the pH of the fluid does not impact how the identifier is activated. As such, the identifiers are, in certain embodiments, characterized by emitting the same signal in terms of timing and strength following contact with a variety of different fluid compositions having a variety of different pH values. In addition or alternatively, the identifier may be an identifier that emits a signal when interrogated after it has been activated, where activation still occurs in a controlled manner that is independent of target site environment, as reviewed above.

Depending on the needs of a particular application, the signal obtained from the identifier may be a generic signal, e.g., a signal that merely identifies that the composition has contacted the target site, or a unique signal, e.g., a signal which in some way uniquely identifies that a particular composition from a group or plurality of different compositions in a batch has contacted a target physiological site. As such, the identifier may be one that, when employed in a batch of unit dosages, e.g., a batch of tablets, emits a signal which cannot be distinguished from the signal emitted by the identifier of any other unit dosage member of the batch. In yet other embodiments, the identifier emits a signal that uniquely identifies a given unit dosage, even from other identical unit dosages in a given batch. Accordingly, in certain embodiments the identifier emits a unique signal that distinguishes a given type of unit dosage from other types of unit dosages, e.g., a given medication from other types of medications. In certain embodiments, the identifier emits a unique signal that distinguishes a given unit dosage from other unit dosages of a defined population of unit dosages, e.g., a prescription, a batch or a lifetime production run of dosage formulations. In certain embodiments, the identifier emits a signal that is unique, i.e., distinguishable, from a signal emitted by any other dosage formulation ever produced, where such a signal may be viewed as a universally unique signal (e.g., analogous to a human fingerprint which is distinct from any other fingerprint of any other individual and therefore uniquely identifies an individual on a universal level). In one embodiment, the signal may either directly convey information about the composition, or provide an identifying code, which may be used to retrieve information about the composition from a database, i.e., a database linking identifying codes with compositions.

The identifier may be any component or device that is capable of providing a detectable signal following controlled activation, e.g., upon contact with the target site. In certain embodiments, the identifier emits a signal once the composition comes into contact with a physiological target site, e.g., as summarized above. For example, a patient may ingest a pill that, upon contact with the stomach fluids, generates a detectable signal.

Depending on the embodiment, the target physiological site or location may vary, where representative target physi-

ological sites of interest include, but are not limited to: a location in the gastrointestinal tract (such as the mouth, esophagus, stomach, small intestine, large intestine, etc.); another location inside the body, such as a parental location, vascular location, etc.; or a topical location; etc. In certain embodiments, the identifier is configured to be activated upon contact with fluid in the target site, regardless of the particular composition of the target site.

In certain embodiments, the identifier is dimensioned to be orally ingestible, e.g., either by itself or upon combination with a physiologically acceptable carrier component of the composition so as to produce a composition that can be readily administered to a subject in need thereof. As such, in certain embodiments, the identifier element is dimensioned to have a width ranging from about 0.05 to about 2 or more mm, e.g., from about 0.05 mm to about 1 mm, such as from about 0.1 mm to about 0.2 mm; a length ranging from about 0.05 to about 2 or more mm, e.g., from about 0.05 mm to about 1 mm, such as from about 0.1 mm to about 0.2 mm and a height ranging from about 0.05 to about 2 or more mm, e.g., from about 0.1 mm to about 1 mm, such as from about 0.05 mm to about 0.3 mm, including from about 0.1 mm to about 0.2 mm. In certain embodiments the identifier is 1 mm^3 or smaller, such as 0.1 mm^3 or smaller, including 0.2 mm^3 or smaller. The identifier element may take a variety of different configurations, such as but not limited to: a chip configuration, a cylinder configuration, a spherical configuration, a disc configuration, etc, where a particular configuration may be selected based on intended application, method of manufacture, etc.

The identifier may generate a variety of different types of signals, including but not limited to: RF signals, magnetic signals, conductive (near field) signals, acoustic signals, etc. Of interest in certain embodiments are the specific signals described in PCT application serial no. PCT/US2006/16370 titled "Pharma-Informatics System" and filed on Apr. 28, 2006 and published as WO 2006/116718; the disclosures of various types of signals in these applications being specifically incorporated herein by reference.

The transmission time of the identifier may vary, where in certain embodiments the transmission time may range from about 0.1 μsec to about 48 hours or longer, e.g., from about 0.1 μsec to about 24 hours or longer, such as from about 0.1 μsec to about 4 hours or longer, such as from about 1 sec to about 4 hours. Depending on the given embodiment, the identifier may transmit a signal once or transmit a signal two or more times, such that the signal may be viewed as a redundant signal.

In certain embodiments, the identifier may be one that is programmable following manufacture, in the sense that the signal generated by the identifier may be determined after the identifier is produced, where the identifier may be field programmable, mass programmable, fuse programmable, and even reprogrammable. Such embodiments are of interest where uncoded identifiers are first produced and following incorporation into a composition are then coded to emit an identifying signal for that composition. Any convenient programming technology may be employed. In certain embodiments, the programming technology employed is RFID technology. RFID smart tag technology of interest that may be employed in the subject identifiers includes, but is not limited to: that described in U.S. Pat. Nos. 7,035,877; 7,035,818; 7,032,822; 7,031,946, as well as published application no. 20050131281, and the like, the disclosures of which are herein incorporated by reference. With RFID or other smart tag technology, a manufacturer/vendor may associate a unique ID code with a given identifier, even after the identifier has been incorporated into the composition. In certain embodiments, each individual or entity involved in the handling of the composition prior to use may introduce information into the identifier, e.g., in the form of programming with respect to the signal emitted by the identifier, e.g., as described in U.S. Pat. No. 7,031,946 the disclosure of which is herein incorporated by reference.

The identifier of certain embodiments includes a memory element, where the memory element may vary with respect to its capacity. In certain embodiments, the memory element has a capacity ranging from about 1 bit to 1 gigabyte or more, such as 1 bit to 1 megabyte, including from about 1 bit to about 128 bit. The particular capacity employed may vary depending on the application, e.g., whether the signal is a generic signal or coded signal, and where the signal may or may not be annotated with some additional information, e.g., name of active agent, etc.

Controlled activation identifier components of embodiments of the invention have: (a) a controlled activation element made up of one or more components; and (b) a signal generation component, where the signal generation component is activated by the controlled activation component to produce an identifying signal, e.g., as described above.

Controlled Activation Component

The controlled activation component is a component that activates the signal generation element of the identifier to provide a signal, e.g., by emission or upon interrogation, following contact of the composition with a target physiological site of interest, such as the stomach. The controlled activation component is configured to be activated in a manner that is substantially, if not completely, independent of the particularly compositional makeup of the target site, such that activation is independent of the compositional makeup of the target site.

As reviewed in PCT application serial no. PCT/US2006/16370 titled "Pharma-Informatics System" and filed on Apr. 28, 2006 and published as WO 2006/116718, activation of the identifier may be achieved in a number of different ways, where such approaches include, but are not limited to: battery completion, battery connection, etc. The different activation approaches disclosed in this copending application may be readily adapted to provide controlled activation, as described herein, and as such are herein incorporated by reference in their entirety.

For example, controlled activation elements based on battery completion formats may employ a battery that includes, when completed, a cathode, an anode, and an electrolyte. When the composition is administered, e.g., ingested, and travels through the esophagus, it proceeds to enter the stomach. The cathode and anode provided within the composition do not constitute a full battery. However, as the composition dissolves to expose the cathode and anode, the stomach fluid (either by itself or when combined with a dried conductive precursor medium component of the identifier) acts as the electrolyte component of the battery. The added component of the stomach fluid thus completes the battery. Therefore, as the composition contacts the target site, e.g., by entering the stomach and dissolving to the point of cathode and anode exposure, a power source is provided which activates the identifier, e.g., in chip configuration. The data signal is then transmitted.

In certain embodiments, the battery that is employed is one that comprises two dissimilar electrochemical materials which constitute the two electrodes (e.g., anode and cathode) of the battery. When the electrode materials are exposed and come in contact with the body fluid, such as stomach acid or other types of fluid (either alone or in combination with a dried conductive medium precursor, as reviewed below), a

potential difference, that is, a voltage, is generated between the electrodes as a result of the respective oxidation and reduction reactions incurred to the two electrode materials. A voltaic cell, or battery, can thereby be produced. Accordingly, in embodiments of the invention, such batteries are configured such that when the two dissimilar materials are exposed to the target site, e.g., the stomach, the digestive tract, etc., during the physical and chemical erosion of the composition in which the signal generation element is present, a voltage is generated. The two dissimilar materials in an electrolyte are at different potentials, similar to the physics model of a 'potato battery'. As an example, copper and zinc when put into a cell have different potentials. Similarly, gold and magnesium have different potentials. As a result, a potential difference between the two dissimilar materials is generated.

In certain of these embodiments, the battery power source may be viewed as a power source that exploits electrochemical reaction in an ionic solution such as gastric fluid, blood, or other bodily fluids and some tissues. FIG. **1** provides a diagrammatic representation of the events which occur when the pill is ingested and dissolved to the point that some of the pill has been chemically and/or physically eroded away. Electrode materials **32** and **33** are now in an ionic solution **39** (which may be made up of target site fluid alone or target site fluid combined with a dried conductive medium precursor). This configuration creates a low voltage (V−) and a high voltage (V+) as applied to an electronic circuit **40**. The two outputs of that electronic circuit **40** are E0 **41** and E1 **42**, which are the signal-transmission electrodes on the top surface. In an alternate embodiment no shown in FIG. **2** where the signal generation element **30** includes a single electrode, the output is E0 **41**.

FIG. **2** shows a similar arrangement as in FIG. **1**. However, instead of having two electrodes as the output, a coil is provided. Electrode materials **32** and **33** are applied to the electronic circuit **40** of signal generation element **30**. The outputs of the electronic circuit **40** are coupled to a coil **43**. This configuration provides that a battery is created by Electrode materials **32** and **33** when exposed to ionic solution. This battery drives the circuit **40**, which creates an oscillating frequency. This oscillating current goes through the coil and generates a RF magnetic signal. Unlike near-field quasi-static electrical signals, which may suffer from significant attenuation through body tissues, the RF magnetic signal can be transmitted through body tissues with less attenuation. The RF magnetic signal is then picked up by an external or internal receiver device that has a magnetic-signal detection mechanism. If a broadcast is provided at a high enough frequency, a pager-like device that is worn by the patient will detect whenever a pill is ingested.

FIGS. **1** and **2** illustrate an identifier **30** having a signal generation element **40** powered by electrochemical reaction. Signal generation element **40** is electrically connected to electrode electrodes **32** and **33**, which are made of two different materials and are electrically insulated from each other. When electrodes **32** and **33** are immersed in an ionic solution **39**, a potential difference develops between them; for instance, electrode **33** rises to a higher potential V+ while electrode **32** falls to a lower potential V−. This potential difference can be used to power circuitry **40**.

Electrodes **32** and **33** can be implemented in various ways; for instance, areas on opposing surfaces of an integrated circuit chip can be coated with two different metals, and the entire chip can be placed in the ionic solution. Alternatively, electrodes **32** and **33** may extend away from element **40** as shown. Other arrangements may also be used.

Electrodes **32** and **33** can be made of any two materials appropriate to the environment in which the identifier **30** will be operating. The active materials are any pair of materials with different electrochemical potentials. For instance, in some embodiments where ionic solution **39** comprises stomach acids, electrodes **32** and **33** may be made of a noble metal (e.g., gold, silver, platinum, palladium or the like) so that they do not corrode prematurely. Alternatively, the electrodes can be fabricated of aluminum or any other conductive material whose survival time in the applicable ionic solution is long enough to allow identifier **30** to perform its intended function. Suitable materials are not restricted to metals, and in certain embodiments the paired materials are chosen from metals and non-metals, e.g., a pair made up of a metal (such as Mg) and a salt (such as CuI). With respect to the active electrode materials, any pairing of substances—metals, salts, or intercalation compounds—with suitably different electrochemical potentials (voltage) and low interfacial resistance are suitable.

A variety of different materials may be employed as the battery electrodes. In certain embodiments, electrode materials are chosen to provide for a voltage upon contact with the target physiological site, e.g., the stomach, sufficient to drive the signal generation element of the identifier. In certain embodiments, the voltage provided by the electrode materials upon contact of the metals of the power source with the target physiological site is 0.001 V or higher, including 0.01 V or higher, such as 0.1 V or higher, e.g., 0.3 V or higher, including 0.5 volts or higher, and including 1.0 volts or higher, where in certain embodiments, the voltage ranges from about 0.001 to about 10 volts, such as from about 0.01 to about 10 V.

Materials and pairings of interest include, but are not limited to those reported in Table 1 below.

TABLE 1

	Anode	Cathode
Metals	Magnesium, Zinc Sodium (†), Lithium (†) Iron and alloys thereof	
Salts		Copper salts: iodide, chloride, bromide, sulfate, formate, (other anions possible) Fe^{3+} salts: e.g. orthophosphate, pyrophosphate, (other anions possible) Oxygen (††) on platinum, gold or other catalytic surfaces
Intercalation compounds	Graphite with Li, K, Ca, Na, Mg	Vanadium oxide Manganese oxide

(†) Protected anodes: certain high energy anode material such as Li, Na, and other alkali metals are unstable in their pure form in the presence of water or oxygen. These may however be used in an aqueous environment if stabilized. One example of this stabilization is the so-called "protected lithium anode" developed by Polyplus Corporation (Berkeley, CA), where a polymer film is deposited on the surface of lithium metal to protect it from rapid oxidation and allow its use in aqueous environment or air ambient. (Polyplus has IP pending on this).

(††) Dissolved oxygen can also serve as a cathode. In this case, the dissolved oxygen in the bodily fluids would be reduced to OH— at a suitable catalytic surface such at Pt or gold. Other catalysts are also possible.

In certain embodiments, one or both of the metals may be doped with a non-metal, e.g., to enhance the voltage output of the battery. Non-metals that may be used as doping agents in certain embodiments include, but are not limited to: sulfur, iodine and the like.

In certain embodiments, the electrode materials are cuprous iodine (CuI) or cuprous chloride as the anode and magnesium (Mg) metal or magnesium alloy as the cathode. Embodiments of the present invention use electrode materials that are not harmful to the human body.

Additional battery configurations of interest include, but are not limited to, those described in: U.S. Provisional Application Ser. No. 60/889,868 titled "Pharma Informatics System Power Source," and filed on Feb. 14, 2007; U.S. Provisional Application Ser. No. 60/889,870 titled "Pharma Informatics System Power Source Having High Surface Area Cathodes," and filed on Feb. 14, 2007; and U.S. Provisional Application Ser. No. 60/889,871 titled "Pharma Informatics System Having Short Resistant Series Battery"; the disclosures of which applications are herein incorporated by reference.

The controlled activation element of the identifier that provides for controlled activation may be responsive to a variety of different types of stimuli. Stimuli of interest for which the controlled activation element can be configured to be responsive to include but are not limited to: liquid (wetting), time, pH, ionic strength, conductivity, biological molecules (e.g. specific proteins or enzymes that are present in the stomach, small intestine, colon), blood, temperature, specific auxiliary agents (foods ingredients such as fat, salt, or sugar, or other pharmaceuticals whose co-presence is clinically relevant), bacteria in the stomach, pressure, and light.

The controlled activation element is made up of one or more components that provides for the desired controlled activation functionality, such that the controlled activation element is responsive to the stimulus of interest. The nature of the component or components that make up the controlled activation element may vary. For example, where the stimulus of interest is temperature, the controlled activation element may be a barrier of a material, such as a film (e.g., a polymeric film) whose solubility is a function of temperature, specifically one that becomes soluble at or near body temperature. Such a film may be insoluble/impermeable to water at room temperature but soluble/permeable at 37° C. Materials of interest that may be used for such films include, but are not limited to the polymeric materials listed below. In those embodiments where pressure is the stimuli of interest, the controlled activation element may be a pressure sensitive material, e.g., a capsule or shell (for example, made of a cellulosic material), that has a specific mechanical strength such that at a pressure threshold above the threshold the element will be crushed and allow the identifier to be activated and transmit a signal. In other embodiments of interest, the stimulus may be light. For example, the stimulus may be a fluorescent label which has been attached to a tumor. As the identifier passes by the tumor, the controlled activation element may include a component that provides light at a stimulating wavelength for the label and also a component that detects emitted light from the label. Any convenient light source and detector may be employed. When the detector component detects the emitted light, it will activate the identifier in a controlled activation manner.

In certain embodiments, the one or more controlled activation components of the invention provide for controlled activation, i.e., activation in a manner that is substantially, if not completely, independent of target site environment, as reviewed above. In one embodiment of interest, the controlled activation component includes a dried conductive medium that, upon combination with target site fluid, produces an ionic medium in the presence of the first and second dissimilar materials to activate the battery, e.g., as reviewed above. A representative configuration of such activation component that includes a dried conductive medium precursor component is provided in FIG. **3**. FIG. **3** shows battery element with electrode materials **32** and **33** present on a surface of solid support **50**. Positioned between electrode materials **32** and **33** is dried conductive medium precursor **34**.

When present, the dried conductive medium precursor may be any of a variety of different types of compositions. Compositions of interest include, but are not limited to: salts of physiologically acceptable electrolytes, such as but not limited to: sodium ion, chloride ion, potassium ion and calcium ion, magnesium ion, etc. Specific physiologically compatible salts of interest include, but are not limited to: KCl, NaCl, $MgCl_2$, and the like. Aspects of the invention include the presence of a dried conductive medium precursor. When the precursor is a salt, e.g., as described above, the dried salt may be provided in any convenient format, such as a lyophilized salt composition.

A variation of the embodiment shown in FIG. **3** is depicted in FIG. **4**. In FIG. **4**, the identifier includes a protective barrier, where the protective barrier serves to retain dried conductive medium precursor. The protective barrier **35** may have a variety of different configurations and functions, in addition to serving to retain the precursor with the identifier. For example, the protective barrier **35** may serve to provide for controlled metering of target site liquid to the dried conductive medium precursor **34**. In FIG. **4**, ion permeable membrane **35** is provided which controls which portion of the target site fluid combines with the dried conductive medium precursor **34** to activate the battery. Any convenient semi-permeable membrane may be employed. The semi-permeable membrane may comprise ePTFE, Dacron®, polyurethane, silicone rubber, poly(lactide-co-glycolide) (PLGA), poly(caprolactone) (PCL), poly(ethylene glycol) (PEG), collagen, polypropylene, cellulose acetate, poly(vinylidene fluoride) (PVDF), nafion or other biocompatible material. The pore size of the membrane may vary depending on the particular configuration, where in certain embodiments the membrane have a pore size (MW cutoff of about 1000 d or less, such as about 500 d or less, including about 250 d or less, e.g., about 100 d or less, such as about 50 d or less). In certain embodiments, the membrane is a water only permeable membrane, such that water, but little if any other fluid constituents at the target site, pass through the membrane to reach to the dried conductive medium precursor of the identifier.

Instead of a semi-permeable membrane, a solid barrier that includes one or more fluid flow paths may be present. For example, in FIG. **5**, the battery includes solid barrier **36** which includes a fluid flow path **37**. While fluid flow path **37** may have any convenient dimensions, in certain embodiments fluid flow path is a capillary flow path, such that fluid flows through the flow path via capillary action. In certain embodiments, the fluid flow path has microscale cross-sectional inner dimensions such that the independent dimensions are greater than about 1 μm and less than about 1000 μm. These independent cross sectional dimensions, i.e. width, depth or diameter depending on the particular nature of the fluid flow path or channel, may range from about 1 to 200 μm, such as from about 10 to 150 μm, and including from about 20 to 100 μm with, the total inner cross sectional area ranging from about 100 to 40,000 μm^2, such as from about 200 to 25,000 μm^2. The inner cross sectional shape of the channel may vary greatly. Configurations include, but are not limited to: rectangular, square, rhombic, triangular or V-shaped, D-shaped, U-shaped, circular, semicircular, ellipsoid and the like. While the fluid flow path as shown in FIG. **5** is straight, the flow path may, course, have a variety of different configurations, such that it may include bends or turns, be curvilinear, etc., as desired. Any convenient fabrication techniques may be employed, where "lab on-a-chip" technologies, such as but not limited to those described in U.S. Pat. Nos. 6,939,451; 6,838,156; 6,730,206; 6,623,860; 6,613,525; 6,306,273; 6,284,113; 6,176,962; 6,103,199; 6,056,860; 6,054,034;

5,935,401; 5,858,188; 7,069,952; 7,033,474; 6,857,449; 6,841,193; 6,660,367; 6,551,836; 6,517,234; 6,509,085; the disclosures of which are herein incorporated by reference.

In certain embodiments, the surface of the flow path may be modified to provide for desired fluid flow properties. For example, the surface energy of one or more surfaces of the flow path may be modified to provide for enhanced fluid flow through the capillary. For example, the surface energy of one or more surfaces of the flow path may be increased, such that the surface becomes more hydrophilic. A variety of different surface energy modification protocols may be employed, where the particular protocol chosen may depend on the particular composition of the barrier and the desired surface energy properties. For example, if one wishes to increase the surface energy of a given surface, the surface may be subjected to plasma treatment, contacted with a surface energy modification such as surface modifying polymer solutions described in, e.g., U.S. Pat. Nos. 5,948,227 and 6,042,710, each of which is incorporated herein in its entirety for all purposes.

In certain embodiments, the barrier may be one that disrupts upon contact with a fluid having sufficient conductivity to activate the identifier in a predetermined manner, either alone or in combination with dried conductive medium precursor that may be present on the support. For example, FIG. **6** shows an embodiment where a barrier **38** is present that, upon contact with a fluid meeting predetermined criteria, e.g., conductivity, pH, etc., disrupts (such as by dissolution) to expose dried conductive medium precursor **34** to fluid and thereby activate the battery.

While FIG. **6** shows the presence of such a barrier with a dried precursor, the dried precursor need not be present. For example, FIG. **7** shows an embodiment where a dried conductive medium precursor is not present. In this embodiment, protective layer **38** protects electrodes **32** and **33** and substrate **50**. Upon contact with a fluid meeting predetermined criteria, e.g., conductivity, pH, etc., protective layer **38** disrupts (such as by dissolution) to expose dried electrodes **32** and **33** to fluid and thereby activate the battery.

A variation of the embodiment shown in FIG. **7** is provided in FIG. **8**. In FIG. **8** barrier **38'** is a time controlled dissolution composition, i.e., a composition that dissolves in a time dependent manner upon contact with a fluid, where the dissolution time of a given material in the fluid of interest is known prior to contact with the fluid, such that the dissolution time is predetermined. In certain embodiments, this composition is a polymer composition, such as a polymer composition employed in time controlled release pharmaceutical compositions. Polymeric compositions of interest that may be employed include, but are not limited to: water-swellable compositions (whose thickness imparts controlled time dissolution), such as compositions made up of a binder (such as vinyl polymers, such as polyvinylpyrrolidone, polyvinyl alcohol, and the like; cellulosic polymers, such as hydroxypropylmethylcellulose, hydroxyethylcellulose, hydroxypropylcellulose, and the like; acrylic polymers and copolymers such as methacrylic acid copolymers, ethyl acrylate-methylmethacrylate copolymers, and the like; natural or synthetic gums, such as guar gum, arabic gum, xanthan gum, and the like; proteins or carbohydrates, such as gelatin, pectin, and the like; and mixtures thereof) and a polymeric coating particle (such as particles made up of cellulosic polymers, such as methylcellulose, carboxymethylcellulose, hydroxypropylcellulose, hydroxypropylmethylcellulose, hydroxyethylcellulose, and the like; vinyl polymers, such as polyvinylpyrrolidone, polyvinyl alcohol, and the like; acrylic polymers and copolymers, such as acrylic acid polymer, methacrylic acid copolymers, ethyl acrylate-methyl methacrylate copolymers, and the like; and mixtures thereof) and described in U.S. Pat. No. 6,190,692 (the disclosure of which is herein incorporated by reference); and the like.

It is noted that with the time-delay configuration as exemplified by the embodiment of FIG. **8**, it is not necessary for the barrier, e.g., membrane, to cover both electrodes and the space in between. In certain embodiments, only one electrode is covered and subsequently activated, since the battery will not discharge unless both electrodes are activated. As such, in certain embodiments just one electrode covered by a "patch" of material that dissolves away, resulting in activation.

The above discussion, in combination with FIGS. **1** to **8**, provides details of certain non-limiting embodiments of the controlled activation elements of the subject identifiers. As described above, the controlled activation element may include a single component, e.g., a barrier, a dried conductive medium, etc., or be a composite controlled activation element of two or more components that work together to provide controlled activation functionality to the identifier (e.g., where the controlled activation element includes both a barrier and a dried conductive medium. In certain embodiments, the various controlled activation mechanisms described above can be combined to achieve cascaded or multi-component activation. For example, several types of film can be deposited or otherwise present on an identifier, or a film-based activation can be combined with a capsule-based activation and a salt-based activation. Examples of such schemes include but are not limited to the following.

In one embodiment, several layers of film are present on the identifier, so that the first layer protects the identifier during processing/storage, the second layer dissolves when a target pH is reached, and the third layer releases a salt to finally activate the device and transmit a signal. Advantages of this type of approach include additional protection and margin against accidental or premature activation. The device can only activate once all the activation events have occurred. Another use of a multilayered film is as an anti-tempering mechanism, because the identifier will activate only after the specific sequence of conditions have been encountered, which makes it difficult or impossible to incorrectly active the device by dipping it into a single fluid or holding it in the mouth without swallowing.

Another example is multiple patches of activating films that are deposited on different parts of the activating surface of the identifier, e.g., the electrodes. For example, the battery on the identifier may be micropatterned or covered by several micropatterned patches of film that activate in different parts of the GI tract, so that a signal is transmitted by an identifier once it reaches the stomach, then transmitted again when the identifier reaches the intestine, and again when it reaches the colon, etc. This configuration allows the same identifier to detect multiple events, such as passage through different parts of the GI tract.

Another use of combined activation is for the identifier to detect a combined event, e.g., to detect when a patient has ingested an identifier along with a certain type of food, drink, or other medication. This allows detection of interactions or of patients ingesting things they are not supposed to with their medication.

Another use in certain embodiments is to transmit a different signal depending on different conditions in the GI tract. An identifier may be built with two separate transmitting elements that are activated via different mechanisms, so that in addition to activation of the identifier information can be

obtained about the GI tract's condition. For example, one element is activated by a low pH condition and the other, in a high pH condition.

Identifiers of the invention may be associated with carrier compositions that can potentially interfere with the functionality of the identifier if the carrier does not degrade properly upon ingestion. For example, a typical gel capsule (e.g., made by Capsugel, Peapack, N.J.) dissolves in aqueous solutions in a manner that is strongly dependent on physical (e.g., temperature) and chemical environment of the device. Under certain combinations of conditions, the gel residue may only dissolve partially, leaving an undissolved or congealed layer or residue on the surface of an identifier associated with the capsule. Such remaining residue can completely prevent activation of the device or reduce signal strength. Where the identifier is configured to be associated with a gel capsule formulation or analogous carrier structure, in certain embodiments the controlled activation element is one which is designed to ensure that when the intended activation time or chemical/physical environment is reached, the device is not hindered by residue from a carrier such as a gel capsule. One configuration designed to present remaining residue from interfering with function of the device includes a soluble film deposited on the device surface such that the partially dissolved gel residue adheres to this film. Upon ingestion, the film then dissolves away in a timed or chemically-sensitive manner, leaving the device surface free of gel. In another approach, an absorbent substance (e.g. powder or granular form) is added to the gel capsule such that the partially dissolved gel residue adheres to the powder or granules. The powder then falls away from the device. Examples may include any edible powder or granules, such as starch, sugar, salt, or proteins. In another configuration, a substance added to the gel capsule that swells significantly upon wetting, resulting in the bursting of the gel capsules and release of the device. Examples include swelling polymer matrices such as pharmaceutical excipients that are disintegrating agents (the so-called superdisintengrants) and dissolution aids. Examples are Ac-Di-Sol (made by FMC) and carboxymethyl cellulose and related compounds. In yet another embodiments, a substance is added to the gel capsule that generates heat upon dissolution. Gel capsule dissolution is very sensitive to heat. Certain salts undergo exothermic dissolution reaction in water. Such salts can be added to the capsule or deposited on the surface of the device so that upon wetting, sufficient heat is generated to raise the local temperature by a few ° C. (e.g., 0.1 to 20° C., such as 1 to 10° C., including 1 to 5° C.). Examples of these salts are: ZnC_2, $BaCl_2$, $MgCl_2$. In yet another embodiment (e.g., as shown in FIG. **12**), a strip or sheet **120** of polymeric material (e.g., ethyl cellulose) with a spring-like property is included inside the gel capsule **122**. The strip is folded or coiled and constrained at its ends by a water soluble polymer (e.g., hydroxypropyl cellulose) **124**. Present inside of the strip is identifier **126**. Upon wetting (indicated by arrow), the water soluble polymer **124** dissolves away, allowing the strip **120** or sheet to unfold with enough mechanical force to burst open the gel capsule **122** and release the device **126** clear of the capsule.

In controlled activation elements that include a film or layer, e.g., as described above, the film or layer can be on only one surface of the device or a portion thereof (e.g., it may cover only an active surface of the device or electrode elements present thereon) or it may cover all surfaces of the device, such that the device is encased or encapsulated in the film or layer. In certain embodiments, the identifier device is encapsulated entirely in a polymeric pellet that dissolves in response to chemical/physical environment and/or time. The resultant pellet is placed inside a gel cap or compressed into a tablet, where it also protects the identifier from damage caused by the large compression forces used to make a tablet.

Film barriers have been described in the above discussion in terms of their functionality in providing controlled activation for the identifier. In addition or alternatively to this function, a film barrier may be present that is configured to prevent mechanical damage to the identifier (e.g., damage to IC or battery layers) during processing, handling, bottling, or storage. For example, the device includes in certain embodiments a film that prevents activation or degradation of the device performance or lifetime during processing steps (e.g., when the battery may get wet) or storage (e.g., via moisture absorption from the atmosphere). For example, a film that is soluble only in low pH solution is employed in certain instances to protect the device during processing in high pH aqueous environments. In certain embodiments, a film is present that prevents device-to-device contact (e.g., when multiple devices are placed in the same gel capsule or in a bottle).

Another type of controlled activation identifier is one that is configured so that it is activated only upon elimination of the identifier from the body. For example, the identifier may be covered (partially or wholly) in a barrier layer that is impervious and remains intact while the identifier passes through the GI tract. Upon elimination of the identifier from the GI tract, the barrier may dissolve when it comes in contact with water present in a waste elimination device, e.g., toilet. For example, the barrier may be sensitive to chemicals present in the water of the toilet. When the barrier is disrupted, the water activates the identifier to emit a signal, where the signal may be picked up by a sensor, e.g., associated with the toilet. To prevent tampering, a second controlled activation element that is disrupted by the GI tract may be included, such that activation only occurs when this second element is disrupted by the GI tract and the first barrier is disrupted by the toilet water.

The identifiers may be fabricated using any convenient processing technology, for example, planar processing technology, e.g., as employed in MEMS fabrication, may be employed, coupled with deposition technologies, such as precipitation, for providing the dried conductive medium precursor.

The subject controlled activation batteries may be fabricated in a number of different ways. In certain embodiments, fabrication protocols which may be categorized as "planar" processing protocols are employed, as developed in greater detail below.

After the battery is activated, further activation configurations can be employed to activate the signal generation component. For example, the signal generation component can be activated through the activation of the gate of a metal oxide semiconductor (MOS) circuit, such as a CMOS switch. Activation of the gate of the MOS circuit can be based on one or more parameters, which include but are not limited to: gate current, gate charge, and gate capacitance. The gate current, for activation purposes, can be a function of the conductivity of surrounding body fluids or tissues. Such conductivity can further be a function of one or more parameters, which include but are not limited to: solution concentration, solution pH value, ionic content of solution, enzymatic content of solution, temperature, and carrier mobility. Carrier mobility can also be a function of temperature. Similarly, the gate charge can be a function of one or more parameters, which include but are not limited to: solution composition, crystal potential, electrical potential, gravitational potential, gate capacitance, and carrier concentration. The carrier concentration can also be a function of temperature. The gate capaci-

tance can be a function of the capacitive geometry of the gate, which can further be a function of pressure, a resonant input, or the characteristics of a dielectric material coupled to the gate. The characteristics of the dielectric material can vary with one or more parameters, which include but are not limited to: chemical contents of a digestive tract, chemical character of a physiological location, and amount of dissolution of the dielectric material in body fluids.

Signal Generation Component

The signal generation component of the identifier element is a structure that, upon activation by the controlled activation component, emits a detectable signal, e.g., that can be received by a receiver, e.g., as described in greater detail below. The signal generation component of certain embodiments can be any convenient device that is capable of producing a detectable signal and/or modulating transduced broadcast power, upon activation by the activation component. Detectable signals of interest include, but are not limited to: conductive signals, acoustic signals, etc. As reviewed above, the signals emitted by the signal generator may be generic or unique signals, where representative types of signals of interest include, but are not limited to: frequency shift coded signals; amplitude modulation signals; frequency modulation signals; etc.

In certain embodiments, the signal generation element includes circuitry, as developed in more detail below, which produces or generates the signal. The type of circuitry chosen may depend, at least in part, on the driving power that is supplied by the power source of the identifier. For example, where the driving power is 1.2 volts or above, standard CMOS circuitry may be employed. In other embodiments where the driving power ranges from about 0.7 to about 1.2 V, sub-threshold circuit designs may be employed. For driving powers of about 0.7 V or less, zero-threshold transistor designs may be employed.

In certain embodiments, the signal generation component includes a voltage-controlled oscillator (VCO) that can generate a digital clock signal in response to activation by the activation component. The VCO can be controlled by a digital circuit, which is assigned an address and which can control the VCO with a control voltage. This digital control circuit can be embedded onto a chip that includes the activation component and oscillator. Using amplitude modulation or phase shift keying to encode the address, an identifying signal is transmitted.

The signal generation component may include a distinct transmitter component that serves to transmit the generated signal to a remote receiver, which may be internal or external to the patient, as reviewed in greater detail below. The transmitter component, when present, may take a number of different configurations, e.g., depending on the type of signal that is generated and is to be emitted. In certain embodiments, the transmitter component is made up of one or more electrodes. In certain embodiments, the transmitter component is made up of one or more wires, e.g., in the form of antenna(e). In certain embodiments, the transmitter component is made up of one or more coils. As such, the signal transmitter may include a variety of different transmitters, e.g., electrodes, antennas (e.g., in the form of wires) coils, etc. In certain embodiments, the signal is transmitted either by one or two electrodes or by one or two wires. A two-electrode transmitter is a dipole; a one electrode transmitter forms a monopole. In certain embodiments, the transmitter only requires one diode drop of power. In some embodiments, the transmitter unit uses an electric dipole or electric monopole antenna to transmit signals.

FIG. **9** shows the detail of one implementation of an electronic circuit that can be employed in an identifier according to the present invention. On the left side are the two battery electrodes comprising a first metal (electrode **32**) and a second metal (electrode **33**). These metals, when in contract with an electrolyte (produced upon contact with target site fluid, either alone or in combination with dried conductive medium precursor, as reviewed above), form a battery that provides power to an oscillator **61**, in this case shown as a schematic. The first metal (electrode **32**) provides a low voltage, (ground) to the oscillator **61**. The second metal (electrode **33**) provides a high voltage (V_{high}) to the oscillator **61**. As the oscillator **61** becomes operative, it generates a clock signal **62** and an inverted clock signal **63**, which are opposites of each other. These two clock signals go into the counter **64** which simply counts the number of clock cycles and stores the count in a number of registers. In the example shown here, an 8 bit counter is employed. Thus, the output of counter **64** begins with a value of "00000000," changes to "00000001" at the first clock cycle, and continues up to "11111111." The 8-bit output of counter **64** is coupled to the input of an address multiplexer (mux) **65**. In one embodiment, mux **65** contains an address interpreter, which can be hard-wired in the circuit, and generates a control voltage to control the oscillator **61**. Mux **65** uses the output of counter **64** to reproduce the address in a serial bit stream, which is further fed to the signal-transmission driving circuit. Mux **65** can also be used to control the duty-cycle of the signal transmission. In one embodiment, mux **65** turns on signal transmission only one sixteenth of the time, using the clock counts generated by counter **64**. Such a low duty cycle conserves power and also allows other devices to transmit without jamming their signals. The address of a given chip can be 8 bits, 16 bits or 32 bits. Typically, more than 8 bits will be used in a product because there are so many different types of pharmaceuticals. Each pharmaceutical will have its own specific address.

The present invention also allows the possibility that, where appropriate, each pharmaceutical batch can be provided with a batch specific address. This allows identification of where the pill was made, when the pill was made, and in what batch it was made. In some cases, each pill will have a unique identifier. This would be particularly useful when drugs are more likely to be subsequently stolen or used illicitly, and thus should be tracked, or where questions of contamination may arise.

According to one embodiment, mux **65** produces a control voltage, which encodes the address serially and is used to vary the output frequency of oscillator **61**. By example, when the control voltage is low, that is, when the serial address bit is at a 0, a 1 megahertz signal is generated by the oscillator. When the control voltage is high, that is, when the address bit is a 1, a 2 megahertz signal is generated the oscillator. Alternately, this can be 10 megahertz and 20 megahertz, or a phase shift keying approach where the device is limited to modulating the phase. The purpose of mux **65** is to control the frequency of the oscillator or an AC alternative embodiment of the amplified signal of oscillation.

The outputs of mux **65** are coupled to electrode drive **66** which can drive the electrodes to impose a differential potential to the solution, drive an oscillating current through a coil to generate a magnetic signal, or drive a single electrode to push or pull charge to or from the solution.

In this manner, the device broadcasts the sequence of 0's and 1's which constitute the address stored in mux **65**. That address would be broadcast repeatedly, and would continue

broadcasting until the first metal or the second metal (**32** and **33**) is consumed and dissolved in the solution, when the battery no longer operates.

In a further embodiment, the device can avoid the use of separate transmission electrodes by using the battery electrodes for transmission. FIG. **13** shows an example of such a configuration. The driver circuit **206** essentially contains a switch coupled between the anode **204** and the cathode. This switch can be turned on or off by the address signal from the logic circuit **201**. When the switch is turned on, the battery for the driver circuit is effectively short-circuited within the chip. Consequently, a current **207** flows through the body from the cathode to anode **204**. The resistance of the body tissue can thereby generate a voltage difference, which can be readily detected by, for example, a differential amplifier.

Other configurations for the signal generation component are of course possible. Other configurations of interest include, but are not limited to: those described in copending PCT application serial no. PCT/US 2006/016370; the disclosure of which is herein incorporated by reference.

Additional Components

Depending on the particular embodiment, the identifier may include a number of different additional components. Some components of interest include, but are not limited, those reviewed below.

Deactivation Component

Where desired, the identifier may also include a deactivation mechanism that disables the identifier if the identifier is not employed as intended, e.g., the composition with which it is associated is not ingested. In certain embodiments, the identifier includes a deactivation mechanism that deactivates the identifier so that it if someone tries to turn it on in a way other than ingesting it, the identifier is deactivated and no signal can be transmitted. Deactivation mechanisms of interest may include one or more of the following components: inclusion of a light-sensitive film that destroys a component of the identifier, e.g., memory, upon exposure to light, a light sensitive battery material, e.g., that is disrupted or destroyed if exposed to light, an identifier that includes components which are sensitive to and inactivated in response to exposure to oxygen, air, moisture, etc. Inactivation of the identifier may include opening a trace, shorting a trace, reducing battery voltage, etc.

Power Enhancers

Where the activator is a power source that is turned on upon contact with a target physiological site, in certain embodiments, circuits for enhancing or boosting voltage output of the power source, e.g., battery, are provided, e.g., charge pumping circuits, charge doublers, etc. Such voltage enhancing elements may enhance the voltage output by at about 2-fold or more, such as by about 5-fold or more.

Power Storage

In certain embodiments, the activation component includes a power storage element. For example, a duty cycle configuration may be employed, e.g., where slow energy production from a battery is stored in a power storage element, e.g., in a capacitor, which then provides a burst of power that is deployed to the signal generation component. In certain embodiments, the activation component includes a timing element which modulates, e.g., delays, delivery of power to the signal generation element, e.g., so signals from different compositions, e.g., pills, that are administered at substantially the same time are produced at different times and are therefore distinguishable.

Additional Features

In certain embodiments, the compositions are characterized by having one or more of the following features. In certain embodiments, the compositions include an identifier which employs a conductive near-field mode of communication in which the body itself is employed as a conductive medium. In such embodiments, the compositions include circuitry that, when freed from the composition upon disruption of the composition (e.g., as described above) the circuitry comes into direct contact with the body and does not remain encapsulated or protected in some manner. In these embodiments, the signal is not a magnetic signal or high frequency (RF) signal. In certain embodiments, the systems are ones that include a receiver which is stably associated with the body, e.g., implanted or topically applied to an external location, such that the systems are distinguished from those in which an external device that is not stably associated with the body is employed to collect data. In certain embodiments, the compositions do not include an imaging system, e.g., camera or other visualization or imaging element, or components thereof, e.g., CCD element, illumination element, etc. In certain embodiments, the compositions do not include a sensing element, e.g., for sensing a physiological parameter, beyond the activator which detects contact with the targeted physiological site. In certain embodiments, the compositions do not include a propulsion element. In certain embodiments, the compositions do not include a sampling element, such as a fluid retrieval element. In certain embodiments, the compositions do not include an actuatable active agent delivery element, such as an element that retains an active agent with the composition until a signal is received that causes the delivery element to release the active agent.

Active Agent Component

Certain embodiments of the subject compositions include an active agent component. "Active agent" includes any compound or mixture of compounds which produces a physiological result, e.g., a beneficial or useful result, upon contact with a living organism, e.g., a mammal, such as a human. Active agents are distinguishable from such components as vehicles, carriers, diluents, lubricants, binders and other formulating aids, and encapsulating or otherwise protective components. The active agent may be any molecule, as well as binding portion or fragment thereof, that is capable of modulating a biological process in a living subject. In certain embodiments, the active agent may be a substance used in the diagnosis, treatment, or prevention of a disease or as a component of a medication. In certain embodiments, the active agent may be a chemical substance, such as a narcotic or hallucinogen, which affects the central nervous system and causes changes in behavior. Active agents of interest include those listed in PCT application serial no. PCT/US 2006/016370; the disclosure of which list is herein incorporated by reference. Broad categories of active agents of interest include, but are not limited to: cardiovascular agents; pain-relief agents, e.g., analgesics, anesthetics, anti-inflammatory agents, etc.; nerve-acting agents; chemotherapeutic (e.g., anti-neoplastic) agents; etc. The active agent of the compositions are typically present in a pharmaceutically acceptable vehicle or carrier, e.g., as described below. In certain embodiments, the active agent is present in an amount of from about 0.1% to about 90% by weight, e.g., from about 1% to about 30% by weight of the active compound.

Pharmaceutically Acceptable Carrier

Where desired, the compositions of the invention may include a pharmaceutically acceptable vehicle (i.e., carrier). Common carriers and excipients, such as corn starch or gelatin, lactose, dextrose, sucrose, microcrystalline cellulose, kaolin, mannitol, dicalcium phosphate, sodium chloride, and alginic acid are of interest. Disintegrators commonly used in

the formulations of the invention include croscarmellose, microcrystalline cellulose, corn starch, sodium starch glycolate and alginic acid.

A liquid composition may comprise a suspension or solution of the compound or pharmaceutically acceptable salt in a suitable liquid carrier(s), for example, ethanol, glycerine, sorbitol, non-aqueous solvent such as polyethylene glycol, oils or water, with a suspending agent, preservative, surfactant, wetting agent, flavoring or coloring agent. Alternatively, a liquid formulation can be prepared from a reconstitutable powder. For example, a powder containing active compound, suspending agent, sucrose and a sweetener can be reconstituted with water to form a suspension; and a syrup can be prepared from a powder containing active ingredient, sucrose and a sweetener.

A composition in the form of a tablet or pill can be prepared using any suitable pharmaceutical carrier(s) routinely used for preparing solid compositions. Examples of such carriers include magnesium stearate, starch, lactose, sucrose, microcrystalline cellulose and binders, for example, polyvinylpyrrolidone. The tablet can also be provided with a color film coating, or color included as part of the carrier(s). In addition, active compound can be formulated in a controlled release dosage form as a tablet comprising a hydrophilic or hydrophobic matrix.

"Controlled release", "sustained release", and similar terms are used to denote a mode of active agent delivery that occurs when the active agent is released from the delivery vehicle at an ascertainable and controllable rate over a period of time, rather than dispersed immediately upon application or injection. Controlled or sustained release may extend for hours, days or months, and may vary as a function of numerous factors. For the pharmaceutical composition of the present invention, the rate of release will depend on the type of the excipient selected and the concentration of the excipient in the composition. Another determinant of the rate of release is the rate of hydrolysis of the linkages between and within the units of the polyorthoester. The rate of hydrolysis in turn may be controlled by the composition of the polyorthoester and the number of hydrolysable bonds in the polyorthoester. Other factors determining the rate of release of an active agent from the present pharmaceutical composition include particle size, acidity of the medium (either internal or external to the matrix) and physical and chemical properties of the active agent in the matrix.

As such, an active pharmaceutical agent can be placed within any controlled-release structure (e.g. a gastroretentive formulation, enteric formulations, timed-release formulations, colonic formulation). Thus the identifier becomes active at the same time that the active ingredient is released. Further, more than one identifier can be incorporated into a controlled release structure, e.g. two identifiers, one of which activates at the start of the controlled release and the second in the middle or at the end.

A composition in the form of a capsule can be prepared using routine encapsulation procedures, for example, by incorporation of active compound and excipients into a hard gelatin capsule. Alternatively, a semi-solid matrix of active compound and high molecular weight polyethylene glycol can be prepared and filled into a hard gelatin capsule; or a solution of active compound in polyethylene glycol or a suspension in edible oil, for example, liquid paraffin or fractionated coconut oil can be prepared and filled into a soft gelatin capsule.

Tablet binders that can be included are acacia, methylcellulose, sodium carboxymethylcellulose, poly-vinylpyrrolidone (Povidone), hydroxypropyl methylcellulose, sucrose, starch and ethylcellulose. Lubricants that can be used include magnesium stearate or other metallic stearates, stearic acid, silicone fluid, talc, waxes, oils and colloidal silica.

Flavoring agents such as peppermint, oil of wintergreen, cherry flavoring or the like can also be used. Additionally, it may be desirable to add a coloring agent to make the dosage form more attractive in appearance or to help identify the product.

Other components suitable for use in the formulations of the present invention can be found in Remington's Pharmaceutical Sciences, Mace Publishing Company, Philadelphia, Pa., 17th ed. (1985).

Identifier Fabrication

In certain embodiments of interest, the identifier element includes a semiconductor support component. Any of a variety of different protocols may be employed in manufacturing the identifier structures and components thereof. For example, molding, deposition and material removal, e.g., planar processing techniques, such as Micro-Electro-Mechanical Systems (MEMS) fabrication techniques, including surface micromachining and bulk micromachining techniques, may be employed. Deposition techniques that may be employed in certain embodiments of fabricating the structures include, but are not limited to: electroplating, cathodic arc deposition, plasma spray, sputtering, e-beam evaporation, physical vapor deposition, chemical vapor deposition, plasma enhanced chemical vapor deposition, etc. Material removal techniques included, but are not limited to: reactive ion etching, anisotropic chemical etching, isotropic chemical etching, planarization, e.g., via chemical mechanical polishing, laser ablation, electronic discharge machining (EDM), etc. Also of interest are lithographic protocols. Of interest in certain embodiments is the use of planar processing protocols, in which structures are built up and/or removed from a surface or surfaces of an initially planar substrate using a variety of different material removal and deposition protocols applied to the substrate in a sequential manner. Illustrative fabrication methods of interest are described in greater detail in PCT application serial no. PCT/US 2006/16370 titled "Pharma-Informatics System" and filed on Apr. 28, 2006 and published as WO 2006/116718; the disclosure of which is herein incorporated by reference.

Methods of Making Compositions

A variety of manufacturing protocols may be employed to produce compositions according to the invention. In manufacturing the subject compositions, a signal generation element is stably associated with a carrier composition, e.g., pharmaceutical dosage composition, in some manner. By stably associated is meant that the signal generation element and the dosage form are not separate from each other, at least until administered to the subject in need thereof, e.g., by ingestion. The signal generation element may be stably associated with the pharmaceutical carrier/active agent component of the composition in a number of different ways. In certain embodiments, where the carrier/active agent component is a solid structure, e.g., such as a tablet or pill, the carrier/active agent component is produced in a manner that provides a cavity for the signal generation element. The signal generation element is then placed into the cavity and the cavity sealed, e.g., with a biocompatible material, to produce the final composition. For example, in certain embodiments a tablet is produced with a die that includes a feature which produces a cavity in the resultant compressed tablet. The signal generation element is placed into the cavity and the cavity sealed to produce the final tablet. In a variation of this embodiment, the tablet is compressed with a removable element, e.g., in the shape of a rod or other convenient shape. The

removable element is then removed to produce a cavity in the tablet. The signal generation element is placed into the cavity and the cavity sealed to produce the final tablet. In another variation of this embodiment, a tablet without any cavity is first produced and then a cavity is produced in the tablet, e.g., by laser drilling. The signal generation element is placed into the cavity and the cavity sealed to produce the final tablet. In yet other tablet embodiments, an open face pharmaceutical carrier/active agent tablet configuration (e.g., as shown in FIG. **11**) is employed, where the active agent/carrier is first prepared into an annular tablet format that includes a circular opening. For example, in the embodiment shown in FIG. **11**, two open annular format pharmaceutical compositions **111** and **113** are prepared, e.g., by pressing, or other convenient fabrication protocol. Also shown is identifier **115**. Following production of the annular tablets **111** and **113**, the identifier is positioned in the opening, as shown. The remaining openings **117** and **119** are then filled or covered with any of the activating films described above (not shown). In yet other embodiments, a tablet is produced by combining the signal generation element with subparts of the tablet, where the subparts may be pre-made subparts or manufactured sequentially. For example, in certain embodiments tablets are produced by first making a bottom half of the tablet, placing the signal generation element on a location of the bottom half of the tablet, and then placing top portion of the tablet over the bottom half and signal generation element to produce the final desired composition. In certain embodiments, a tablet is produced around a signal generation element such that the signal generation element is located inside of the produced tablet. For example, a signal generation element, which may or may not be encapsulated in a biocompatible compliant material, e.g., gelatin (to protect the signal generation element), is combined with carrier/active agent precursor, e.g., powder, and compressed or molded into a tablet in a manner such that the signal generation element is located at an internal position of the tablet. Instead of molding or compressing, the carrier/active agent component is, in certain embodiments, sprayed onto the signal generation element in a manner that builds up the tablet structure. In yet another embodiment, the active agent/carrier component precursor may be a liquid formulation which is combined with the signal generation element and then solidified to produce the final composition. In yet other embodiments, pre-made tablets may be fitted with the signal generation element by stably attaching the signal generation element to the tablet. Of interest are protocols that do not alter the properties of the tablet, e.g., dissolution etc. For example, a gelatin element that snap fits onto one end of a tablet and has the chip integrated with it is employed in certain embodiments. The gelatin element is colored in certain embodiments to readily identify tablets that have been fitted with the signal generation element. Where the composition has an active agent/carrier composition filled capsule configuration, e.g., such as a gelatin capsule filled configuration, the signal generation element may be integrated with a capsule component, e.g., top or bottom capsule, and the capsule filled with the active agent/carrier composition to produce the final composition. The above reviewed methods of manufacture are merely illustrative of the variety of different ways in which the compositions of the invention may be manufactured.

Systems

Also provided are systems that include the subject compositions. Systems of the subject invention include, in certain embodiments, one or more controlled activation identifiers, e.g., as reviewed above, as well as a signal detection component, e.g., in the form of a receiver. The signal detection component may vary significantly depending on the nature of the signal that is generated by the signal generation element of the composition, e.g., as reviewed above.

In certain embodiments, the signal detection component is an implantable component. By implantable component is meant that the signal detection component is designed, i.e., configured, for implantation into a subject, e.g., on a semi-permanent or permanent basis. In these embodiments, the signal detection component is in vivo during use. In yet other embodiments, the signal detection component is ex vivo, by which is meant that the detection component is present outside of the body during use. In certain of these embodiments, as developed in greater detail below, either separate from or integrated with the ex vivo detection component may be a dosage dispenser element, e.g., for dispensing dosages of the compositions based on signal detected from the signal generation element of the detector. Such features may also be present in implantable detection components, e.g., to provide a closed loop administration system that administers a subsequent dosage based on input about ingestion of a previous dosage.

As reviewed above, in certain embodiments the signal generation element of the composition is activated upon contact with a target body site. In certain of these embodiments, the signal detection component is activated upon detection of a signal from the signal generation element. In certain of these embodiments, the composition generates an intermittent signal. In certain of these embodiments, the detection element is capable of simultaneously detecting multiple compositions.

Signal receivers for use in the invention are further described in PCT application serial no. PCT/US 2006/16370 titled "Pharma-Informatics System" and filed on Apr. 28, 2006 and published as WO 2006/116718, as well as provisional application Ser. No. 60/887,780 titled "Signal Receivers for Pharma-Informatics Systems," and filed on Feb. 1, 2007; 60/949,223 titled "Ingestible Even Marker," and filed on Jul. 11, 2007 and 60/956,694 titled "Personal Health Signal Receivers," and filed on Aug. 18, 2007; the disclosures of which are herein incorporated by reference.

In certain embodiments, the signal detection component includes a cardiac monitoring element, such as shown in the system of FIG. **10**. FIG. **10** provides a diagrammatic, exemplary representation of a pill/capsule embodiment of the present invention, in which the composition is configured as an orally ingestible pharmaceutical formulation in the form of a pill or capsule. The stomach **12** of the patient **10** who ingests the composition **14** is shown. This "smart pill" is shown as it has traveled from the mouth **16** to inside **18** the patient's stomach. Upon reaching the stomach, the pill/capsule undergoes a dissolving process with both the mechanical action of the stomach and the various chemical materials in the stomach fluids, such as hydrochloric acid and other digestive agents. FIG. **10** also shows an implanted cardiovascular device "can" **8** and a lead **6**, which components are employed to monitor and detect the signal emitted from pill **14**. The monitoring device can be positioned in other locations as well, such as subcutaneously, in the heart, or in the waist near the stomach, for example. Positioning may be suggested by a particular application.

Methods

Controlled activation identifiers of the invention find use in a variety of different applications, including delivery of pharmaceutical agents, in diagnostic and monitoring applications, etc. In methods where the identifiers are employed in compositions that include one or more pharmaceutically active agents, an effective amount of a composition of the invention is administered to a subject in need of the active agent present

in the composition, where "effective amount" means a dosage sufficient to produce the desired result, e.g., an improvement in a disease condition or the symptoms associated therewith, the accomplishment of a desired physiological change, etc. The amount that is administered may also be viewed as a therapeutically effective amount. A "therapeutically effective amount" means the amount that, when administered to a subject for treating a disease, is sufficient to effect treatment for that disease.

The composition may be administered to the subject using any convenient means capable of producing the desired result, where the administration route depends, at least in part, on the particular format of the composition, e.g., as reviewed above. As reviewed above, the compositions can be formatted into a variety of formulations for therapeutic administration, including but not limited to solid, semi solid or liquid, such as tablets, capsules, powders, granules, ointments, solutions, suppositories and injections. As such, administration of the compositions can be achieved in various ways, including, but not limited to: oral, buccal, rectal, parenteral, intraperitoneal, intradermal, transdermal, intracheal, etc., administration. In pharmaceutical dosage forms, a given composition may be administered alone or in combination with other pharmaceutically active compounds, e.g., which may also be compositions having signal generation elements stably associated therewith.

The subject methods find use in the treatment of a variety of different conditions, including disease conditions. The specific disease conditions treatable by with the subject compositions are as varied as the types of active agents that can be present in the subject compositions. Thus, disease conditions include, but are not limited to: cardiovascular diseases, cellular proliferative diseases, such as neoplastic diseases, autoimmune diseases, hormonal abnormality diseases, infectious diseases, pain management, and the like.

By treatment is meant at least an amelioration of the symptoms associated with the disease condition afflicting the subject, where amelioration is used in a broad sense to refer to at least a reduction in the magnitude of a parameter, e.g. symptom, associated with the pathological condition being treated. As such, treatment also includes situations where the pathological condition, or at least symptoms associated therewith, are completely inhibited, e.g. prevented from happening, or stopped, e.g. terminated, such that the subject no longer suffers from the pathological condition, or at least the symptoms that characterize the pathological condition. Accordingly, "treating" or "treatment" of a disease includes preventing the disease from occurring in an animal that may be predisposed to the disease but does not yet experience or exhibit symptoms of the disease (prophylactic treatment), inhibiting the disease (slowing or arresting its development), providing relief from the symptoms or side-effects of the disease (including palliative treatment), and relieving the disease (causing regression of the disease). For the purposes of this invention, a "disease" includes pain.

A variety of subjects are treatable according to the present methods. Generally such subjects are "mammals" or "mammalian," where these terms are used broadly to describe organisms which are within the class mammalia, including the orders carnivore (e.g., dogs and cats), rodentia (e.g., mice, guinea pigs, and rats), and primates (e.g., humans, chimpanzees, and monkeys). In representative embodiments, the subjects will be humans.

In certain embodiments, the subject methods, as described above, are methods of managing a disease condition, e.g., over an extended period of time, such as 1 week or longer, 1 month or longer, 6 months or longer, 1 year or longer, 2 years or longer, 5 years or longer, etc. The subject methods may be employed in conjunction with one or more additional disease management protocols, e.g., electrostimulation based protocols in cardiovascular disease management, such as pacing protocols, cardiac resynchronization protocols, etc; lifestyle, such a diet and/or exercise regimens for a variety of different disease conditions; etc.

In certain embodiments, the methods include modulating a therapeutic regimen based data obtained from the compositions. For example, data may be obtained which includes information about patient compliance with a prescribed therapeutic regimen. This data, with or without additional physiological data, e.g., obtained using one or more sensors, such as the sensor devices described above, may be employed, e.g., with appropriate decision tools as desired, to make determinations of whether a given treatment regimen should be maintained or modified in some way, e.g., by modification of a medication regimen and/or implant activity regimen. As such, methods of invention include methods in which a therapeutic regimen is modified based on signals obtained from the composition(s).

In certain embodiments, also provided are methods of determining the history of a composition of the invention, where the composition includes an active agent, an identifier element and a pharmaceutically acceptable carrier. In certain embodiments where the identifier emits a signal in response to an interrogation, the identifier is interrogate, e.g., by a wand or other suitable interrogation device, to obtain a signal. The obtained signal is then employed to determine historical information about the composition, e.g., source, chain of custody, etc.

In yet other embodiments where the identifier is one that survives digestion, the methods generally include obtaining the signal generation element of the composition, e.g., by retrieving it from a subject that has ingested the composition, and then determining the history of the composition from obtained signal generation element. For example, where the signal generation element includes an engraved identifier, e.g., barcode or other type of identifier, the engraved identifier may be retrieved from a subject that has ingested the composition and then read to identify at least some aspect of the history of the composition, such as last known purchaser, additional purchasers in the chain of custody of the composition, manufacturer, handling history, etc. In certain embodiments, this determining step may include accessing a database or analogous compilation of stored history for the composition.

The present invention provides the clinician an important new tool in their therapeutic armamentarium: automatic detection and identification of pharmaceutical agents actually delivered into the body. The applications of this new information device and system are multi-fold. Applications include, but are not limited to: (1) monitoring patient compliance with prescribed therapeutic regimens; (2) tailoring therapeutic regimens based on patient compliance; (3) monitoring patient compliance in clinical trials; (4) monitoring usage of controlled substances; and the like. Each of these different illustrative applications is reviewed in greater detail below in PCT/US 2006/16370 titled "Pharma-Informatics System" and filed on Apr. 28, 2006 and published as WO 2006/116718; the disclosure of which is herein incorporated by reference.

Also of interest are methods in which the identifier is ingested apart from any pharmaceutical agent. Such methods include those in which the identifier is employed as an ingestible event marker. In such methods, the identifier is ingested without a pharmaceutically active agent. The identifier may

be ingested in a pharmaceutically acceptable vehicle, e.g., as described above. Specific applications in which the identifier is employed as an ingestible event marker include, but are not limited to, those described in U.S. Provisional Application Ser. No. 60/949,223 titled "Ingestible Event Marker," and filed on Jul. 11, 2007; the disclosures of which are herein incorporated by reference.

One example of a specific application in which the controlled activation identifier is not administered with an active agent and is instead employed as an ingestible event marker is the application of monitoring GI tract motility. In such applications, a controlled activation device that activates only at high pH is employed to determine the transit time from ingestion to the small intestine. In a variation of this embodiment, multiple devices that activate in different parts of the GI tract are employed, where this embodiment may be used for mapping the residence time of the device in various parts of the GI tract. For example, in one instance three controlled activation identifiers (which may be present in the same pill or separate pills) are employed. The first identifier is configured to activate immediately upon ingestion (e.g., which it reaches the stomach). The second controlled activation identifier includes a low pH-insoluble, high-pH soluble coating (e.g., Eudragit) that delays activation until the identifier reaches the small intestine. The third identifier includes a controlled activation element a coating (e.g., amylase+ethyl cellulose) that is only soluble in the colon. From the activation time of the various identifiers one can determine or measure the transition time to the stomach, small intestine, and colon, and thereby gain a detailed data collection of the subject's gastrointestinal motility.

Kits

Also provided are kits for practicing the subject methods. Kits may include one or more compositions of the invention, as described above. The dosage amount of the one or more pharmacological agents provided in a kit may be sufficient for a single application or for multiple applications. Accordingly, in certain embodiments of the subject kits a single dosage amount of a pharmacological agent is present and in certain other embodiments multiple dosage amounts of a pharmacological agent may be present in a kit. In those embodiments having multiple dosage amounts of pharmacological agent, such may be packaged in a single container, e.g., a single tube, bottle, vial, and the like, or one or more dosage amounts may be individually packaged such that certain kits may have more than one container of a pharmacological agent. Suitable means for delivering one or more pharmacological agents to a subject may also be provided in a subject kit. In certain embodiments the kits may also include a signal receiving element, as reviewed above. In certain embodiments, the kits may also include an external monitor device, e.g., as described above, which may provide for communication with a remote location, e.g., a doctor's office, a central facility etc., which obtains and processes data obtained about the usage of the composition.

The subject kits may also include instructions for how to practice the subject methods using the components of the kit. The instructions may be recorded on a suitable recording medium or substrate. For example, the instructions may be printed on a substrate, such as paper or plastic, etc. As such, the instructions may be present in the kits as a package insert, in the labeling of the container of the kit or components thereof (i.e., associated with the packaging or sub-packaging) etc. In other embodiments, the instructions are present as an electronic storage data file present on a suitable computer readable storage medium, e.g. CD-ROM, diskette, etc. In yet other embodiments, the actual instructions are not present in the kit, but means for obtaining the instructions from a remote source, e.g. via the internet, are provided. An example of this embodiment is a kit that includes a web address where the instructions can be viewed and/or from which the instructions can be downloaded. As with the instructions, this means for obtaining the instructions is recorded on a suitable substrate.

Some or all components of the subject kits may be packaged in suitable packaging to maintain sterility. In many embodiments of the subject kits, the components of the kit are packaged in a kit containment element to make a single, easily handled unit, where the kit containment element, e.g., box or analogous structure, may or may not be an airtight container, e.g., to further preserve the sterility of some or all of the components of the kit.

It is to be understood that this invention is not limited to particular embodiments described, as such may vary. It is also to be understood that the terminology used herein is for the purpose of describing particular embodiments only, and is not intended to be limiting, since the scope of the present invention will be limited only by the appended claims.

Where a range of values is provided, it is understood that each intervening value, to the tenth of the unit of the lower limit unless the context clearly dictates otherwise, between the upper and lower limit of that range and any other stated or intervening value in that stated range, is encompassed within the invention. The upper and lower limits of these smaller ranges may independently be included in the smaller ranges and are also encompassed within the invention, subject to any specifically excluded limit in the stated range. Where the stated range includes one or both of the limits, ranges excluding either or both of those included limits are also included in the invention.

Unless defined otherwise, all technical and scientific terms used herein have the same meaning as commonly understood by one of ordinary skill in the art to which this invention belongs. Although any methods and materials similar or equivalent to those described herein can also be used in the practice or testing of the present invention, representative illustrative methods and materials are now described.

All publications and patents cited in this specification are herein incorporated by reference as if each individual publication or patent were specifically and individually indicated to be incorporated by reference and are incorporated herein by reference to disclose and describe the methods and/or materials in connection with which the publications are cited. The citation of any publication is for its disclosure prior to the filing date and should not be construed as an admission that the present invention is not entitled to antedate such publication by virtue of prior invention. Further, the dates of publication provided may be different from the actual publication dates which may need to be independently confirmed.

It is noted that, as used herein and in the appended claims, the singular forms "a", "an", and "the" include plural referents unless the context clearly dictates otherwise. It is further noted that the claims may be drafted to exclude any optional element. As such, this statement is intended to serve as antecedent basis for use of such exclusive terminology as "solely," "only" and the like in connection with the recitation of claim elements, or use of a "negative" limitation.

As will be apparent to those of skill in the art upon reading this disclosure, each of the individual embodiments described and illustrated herein has discrete components and features which may be readily separated from or combined with the features of any of the other several embodiments without departing from the scope or spirit of the present invention. Any recited method can be carried out in the order of events recited or in any other order which is logically possible.

Although the foregoing invention has been described in some detail by way of illustration and example for purposes of clarity of understanding, it is readily apparent to those of ordinary skill in the art in light of the teachings of this invention that certain changes and modifications may be made thereto without departing from the spirit or scope of the appended claims.

Accordingly, the preceding merely illustrates the principles of the invention. It will be appreciated that those skilled in the art will be able to devise various arrangements which, although not explicitly described or shown herein, embody the principles of the invention and are included within its spirit and scope. Furthermore, all examples and conditional language recited herein are principally intended to aid the reader in understanding the principles of the invention and the concepts contributed by the inventors to furthering the art, and are to be construed as being without limitation to such specifically recited examples and conditions. Moreover, all statements herein reciting principles, aspects, and embodiments of the invention as well as specific examples thereof, are intended to encompass both structural and functional equivalents thereof. Additionally, it is intended that such equivalents include both currently known equivalents and equivalents developed in the future, i.e., any elements developed that perform the same function, regardless of structure. The scope of the present invention, therefore, is not intended to be limited to the exemplary embodiments shown and described herein. Rather, the scope and spirit of present invention is embodied by the appended claims.

What is claimed is:

1. A pharmaceutical composition comprising:

a pharmaceutical active agent;

a controlled activation identifier that transmits a signal upon contact with a target site of a body, wherein the signal is a conductive signal and wherein the controlled activation identifier comprises first and second electrodes that are configured to create a voltaic cell when in contact with a conducting fluid at the target site, wherein the voltaic cell supplies power to the controlled activation identifier, and wherein the controlled activation identifier is configured to transmit the conductive signal through tissue of to the body upon the first and second electrodes contacting the conducting fluid at the target site and the voltaic cell supplying power to the controlled activation identifier; and

a pharmaceutically acceptable carrier.

2. The pharmaceutical composition of claim **1**, wherein the first and second electrodes transmit the conductive signal.

3. A controlled activation ingestible identifier that transmits a signal upon contact with a conducting fluid present at a target site of a body, wherein the signal is a conductive signal and wherein the controlled activation identifier comprises first and second electrodes that are configured to create a voltaic cell when in contact with the conducting fluid at the target site, wherein the voltaic cell supplies power to the controlled activation identifier, and wherein the controlled activation identifier is configured to transmit the conductive signal through tissue of the body upon the first and second electrodes contacting the conducting fluid at the target site and the voltaic cell supplying power to the controlled activation identifier.

4. The controlled activation ingestible identifier according to claim **3**, wherein the identifier comprises: a solid support; wherein the first and second electrodes comprise first and second materials with dissimilar electrochemical activities and wherein the electrodes are present on a surface of the solid support.

5. The controlled activation ingestible identifier according to claim **4**, wherein the identifier further comprises a dried conductive medium precursor.

6. The controlled activation ingestible identifier according to claim **5**, wherein the identifier further comprises a protective barrier that retains the dried conductive medium precursor.

7. The controlled activation ingestible identifier according to claim **4**, wherein the identifier further comprises a protective barrier.

8. The controlled activation ingestible identifier according to claim **7**, wherein the protective barrier is a semipermeable membrane.

9. The controlled activation ingestible identifier according to claim **7** wherein the protective barrier is a solid barrier comprising a flow path.

10. The controlled activation ingestible identifier according to claim **9**, wherein the flow path is a capillary flow path.

11. The controlled activation ingestible identifier according to claim **10**, wherein the capillary flow path comprises at least one surface that has been surface energy modified to enhance hydrophilic fluid flow through the capillary flow path.

12. The controlled activation ingestible identifier according to claim **4**, wherein the identifier is protected by a barrier that disrupts upon contact with a fluid having sufficient conductivity to activate the identifier in a predetermined manner.

13. The controlled activation ingestible identifier according to claim **4**, wherein the identifier is protected by a polymeric coating that dissolves upon contact with a fluid in a time-delayed manner.

14. The controlled activation ingestible identifier according to claim **4**, wherein the identifier further comprises a signal producing system that transmits a signal when the dried conductive medium precursor is combined with water to produce a conductive medium that conductively couples the first and second materials.

15. The controlled activation ingestible identifier according to claim **3**, wherein the first and second electrodes transmit the conductive signal.

16. A system comprising:

a controlled activation ingestible identifier that transmits a signal upon contact with a conducting fluid present at a target site of a body, wherein the signal is a conductive signal and wherein the controlled activation identifier comprises first and second electrodes that are configured to create a voltaic cell when in contact with the conducting fluid at the target site, wherein the voltaic cell supplies power to the controlled activation identifier, and wherein the controlled activation identifier is configured to transmit the conductive signal through tissue of the body upon the first and second electrodes contacting the conducting fluid at the target site and the voltaic cell supplying power to the controlled activation identifier; and

a receiver for detecting a signal produced by the identifier.

17. The system according to claim **16**, wherein the receiver is an in vivo receiver.

18. The system according claim **16**, wherein the receiver is an ex vivo receiver.

19. The system according claim **16**, wherein the first and second electrodes transmit the conductive signal.

20. A method comprising:

administering to a subject a controlled activation ingestible identifier that transmits a signal upon contact with a conducting fluid present at a target site, wherein the controlled activation identifier comprises first and sec-

ond electrodes that are configured to create a voltaic cell when in contact with the conducting fluid at the target site, wherein the voltaic cell is configured to supply power to the controlled activation identifier, and wherein the controlled activation identifier is configured to transmit the signal through tissue of the body upon the first and second electrodes contacting the conducting fluid at the target site and the voltaic cell supplying power to the controlled activation identifier, wherein the signal is a conductive signal transmitted to a body with first and second electrodes; and

transmitting, by the controlled activation identifier, the conductive signal upon contact with the target site of a body.

21. The method of claim **20**, wherein the first and second electrodes transmit the conductive signal.

* * * * *