US 20150084509A1

(19) United States

(12) Patent Application Publication

Yuzurihara et al.

(10) Pub. No.: US 2015/0084509 A1

(43) Pub. Date: Mar. 26, 2015

(54) **HIGH-FREQUENCY POWER SUPPLY DEVICE AND REFLECTED WAVE POWER CONTROL METHOD**

(71) Applicant: **KYOSAN ELECTRIC MFG. CO., LTD.**, Yokohama-shi, Kanagawa (JP)

(72) Inventors: **Itsuo Yuzurihara**, Zama-shi (JP); **Satoshi Aikawa**, Yokohama-shi (JP); **Hiroshi Kunitama**, Ota-ku (JP)

(73) Assignee: **KYOSAN ELECTRIC MFG. CO., LTD.**, Yokohama-shi, Kanagawa (JP)

(21) Appl. No.: **14/394,341**

(22) PCT Filed: **Jun. 3, 2013**

(86) PCT No.: **PCT/JP2013/065339**

§ 371 (c)(1),
(2) Date: **Oct. 14, 2014**

(30) **Foreign Application Priority Data**

Jun. 18, 2012 (JP) 2012-136942

Publication Classification

(51) **Int. Cl.**

H01J 37/32	(2006.01)
H02M 1/08	(2006.01)
H02M 7/539	(2006.01)

(52) **U.S. Cl.**

CPC ***H01J 37/32174*** (2013.01); ***H02M 7/539*** (2013.01); ***H02M 1/08*** (2013.01); ***H01J 37/32146*** (2013.01)

USPC **315/111.21**

(57) **ABSTRACT**

In an RF power supply for supplying RF power to a plasma load, reflected wave power control is performed in which the reflected wave power of an RF generator is detected and the RF generator is controlled. For a short-time variation in reflected wave power, control is performed based on a peak value variation in the detection value of reflected wave power. For a long-time variation in reflected wave power, control is performed based on a variation in a smoothed value obtained by smoothing detection values of reflected wave power. A reflected wave power control loop system includes a reflected wave power peak value dropping loop system and an arc blocking system that perform control based on a peak variation in reflected wave power and a reflected wave power amount dropping loop system that performs control based on a smoothed power amount of reflected wave power.

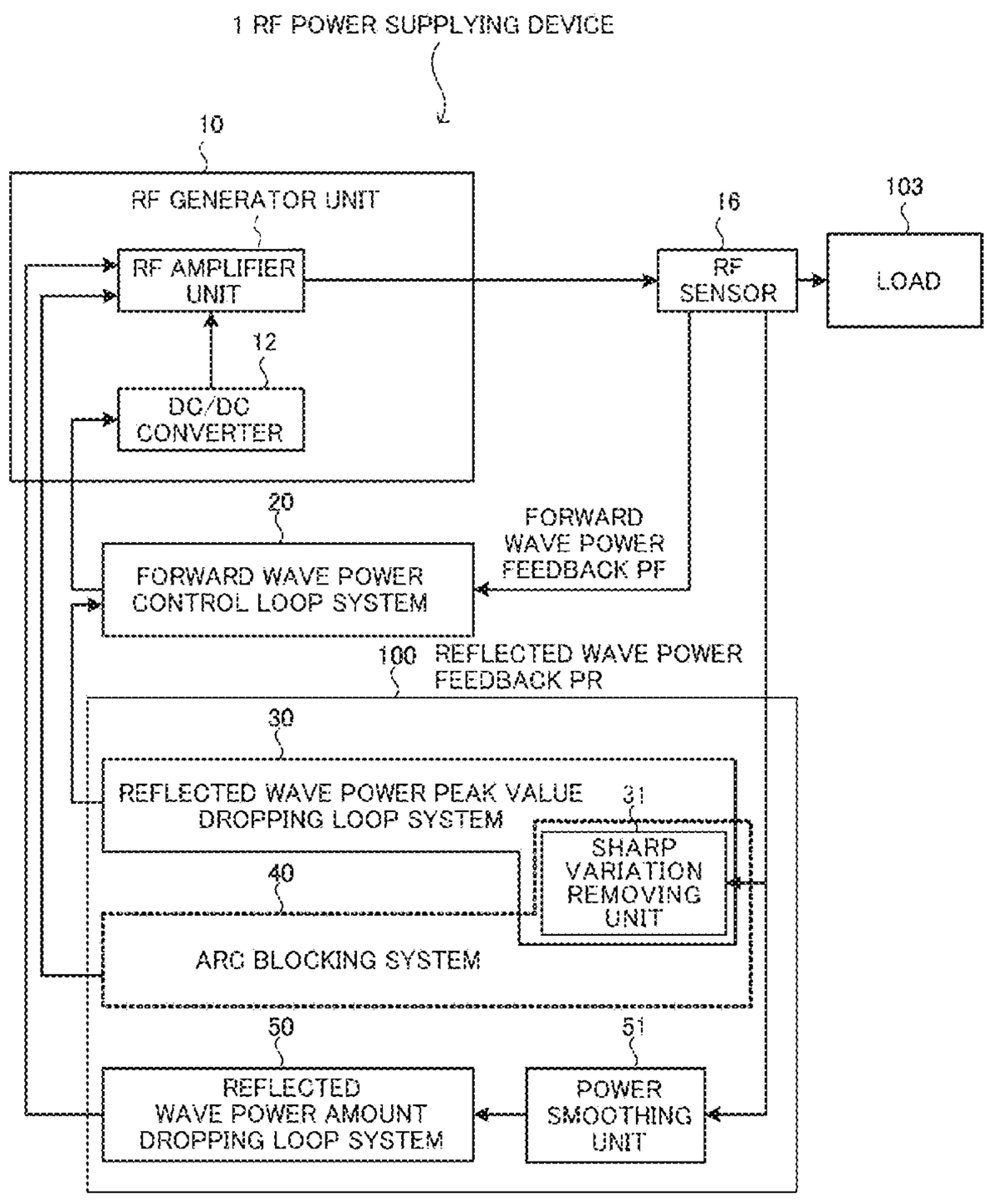

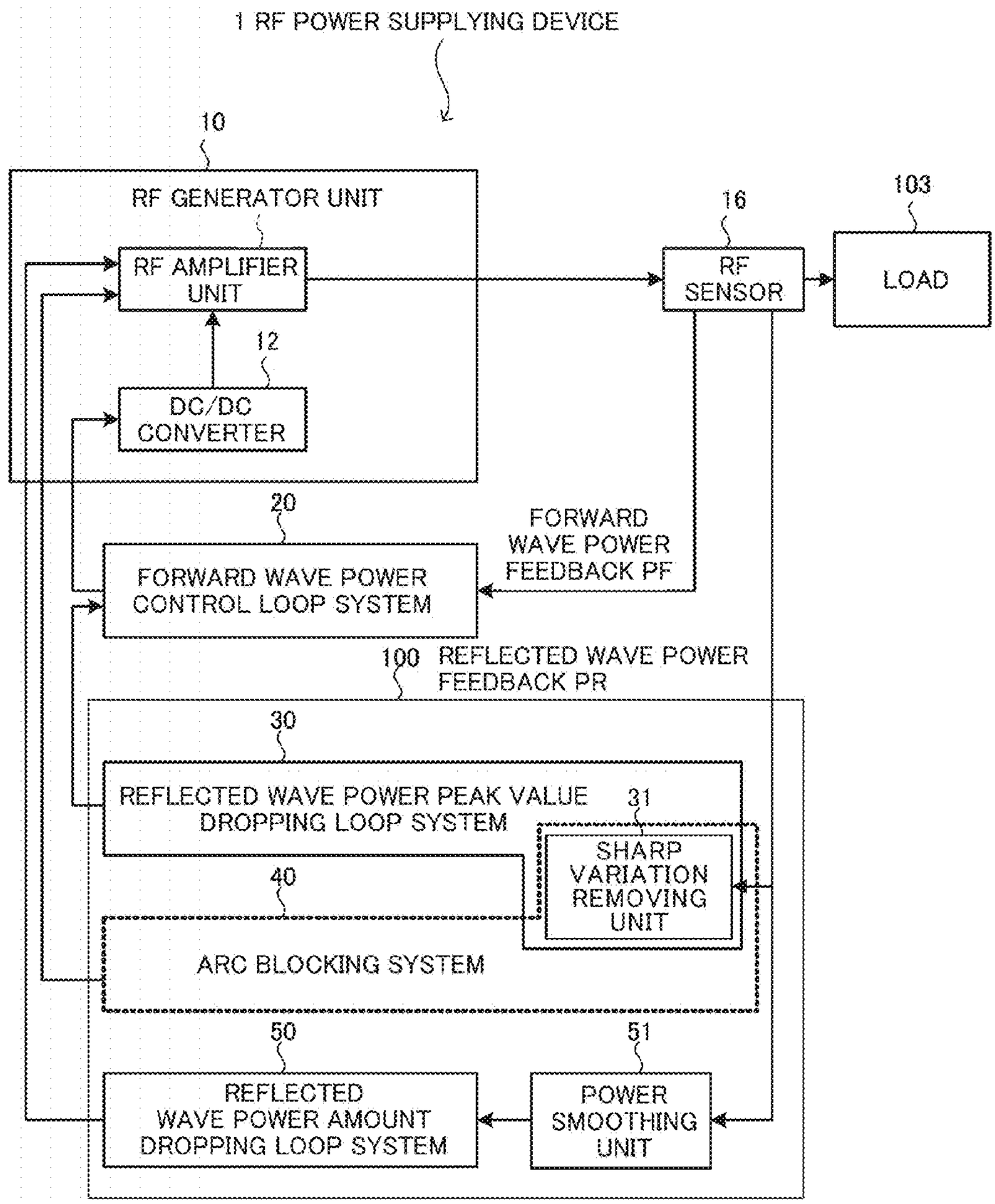
1 RF POWER SUPPLYING DEVICE
10
RF GENERATOR UNIT
RF AMPLIFIER UNIT
12
DC/DC CONVERTER
16
RF SENSOR
103
LOAD
20
FORWARD WAVE POWER CONTROL LOOP SYSTEM
FORWARD WAVE POWER FEEDBACK PF
100
REFLECTED WAVE POWER FEEDBACK PR
30
REFLECTED WAVE POWER PEAK VALUE DROPPING LOOP SYSTEM
31
SHARP VARIATION REMOVING UNIT
40
ARC BLOCKING SYSTEM
50
REFLECTED WAVE POWER AMOUNT DROPPING LOOP SYSTEM
51
POWER SMOOTHING UNIT

FIG. 1

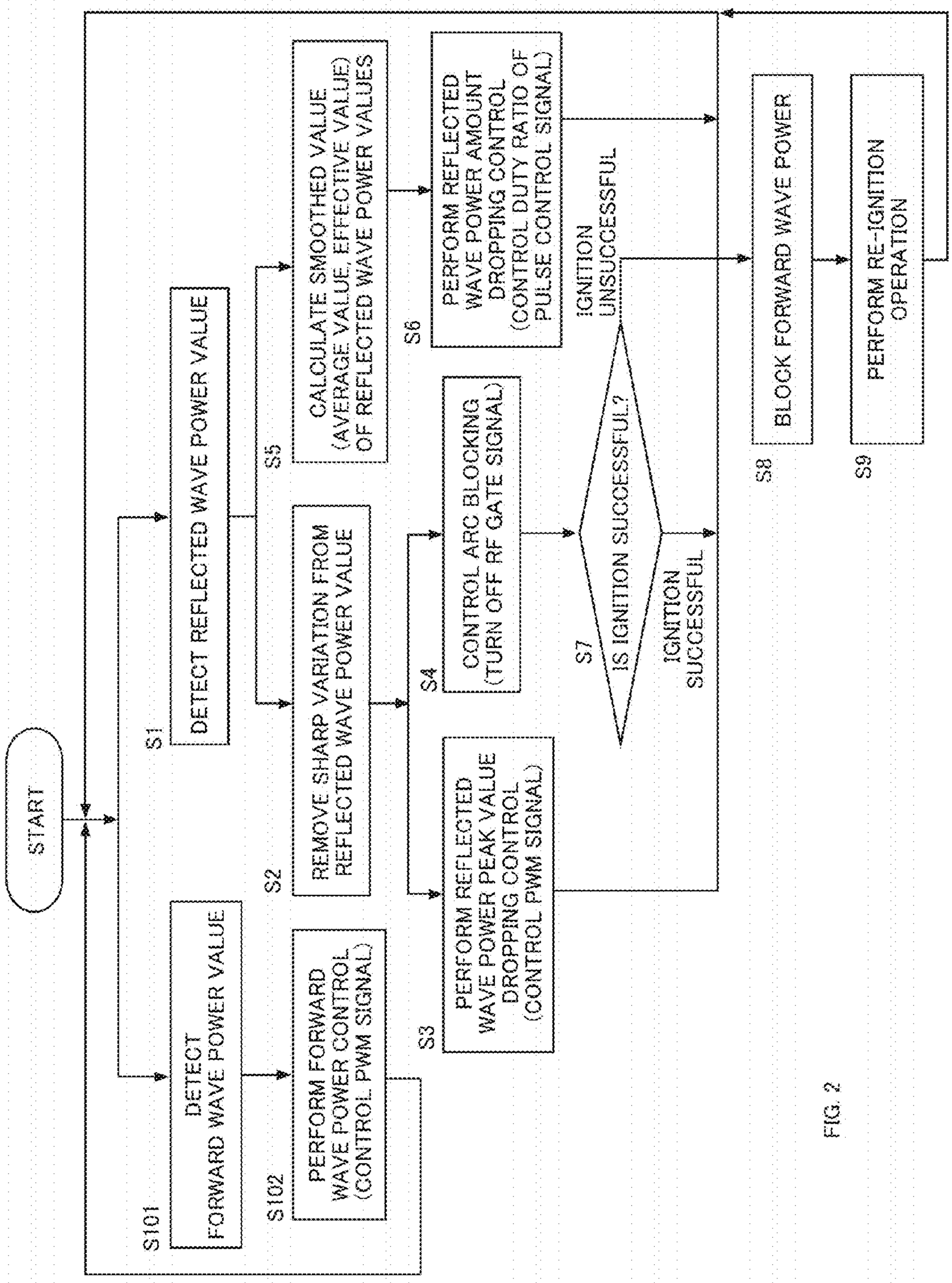
START
S101
DETECT FORWARD WAVE POWER VALUE
S102
PERFORM FORWARD WAVE POWER CONTROL (CONTROL PWM SIGNAL)
S1
DETECT REFLECTED WAVE POWER VALUE
S2
REMOVE SHARP VARIATION FROM REFLECTED WAVE POWER VALUE
S3
PERFORM REFLECTED WAVE POWER PEAK VALUE DROPPING CONTROL (CONTROL PWM SIGNAL)
S4
CONTROL ARC BLOCKING (TURN OFF RF GATE SIGNAL)
S5
CALCULATE SMOOTHED VALUE (AVERAGE VALUE, EFFECTIVE VALUE) OF REFLECTED WAVE POWER VALUES
S6
PERFORM REFLECTED WAVE POWER AMOUNT DROPPING CONTROL (CONTROL DUTY RATIO OF PULSE CONTROL SIGNAL)
S7
IS IGNITION SUCCESSFUL?
IGNITION UNSUCCESSFUL
IGNITION SUCCESSFUL
S8
BLOCK FORWARD WAVE POWER
S9
PERFORM RE-IGNITION OPERATION

FIG. 2

FIG. 3A

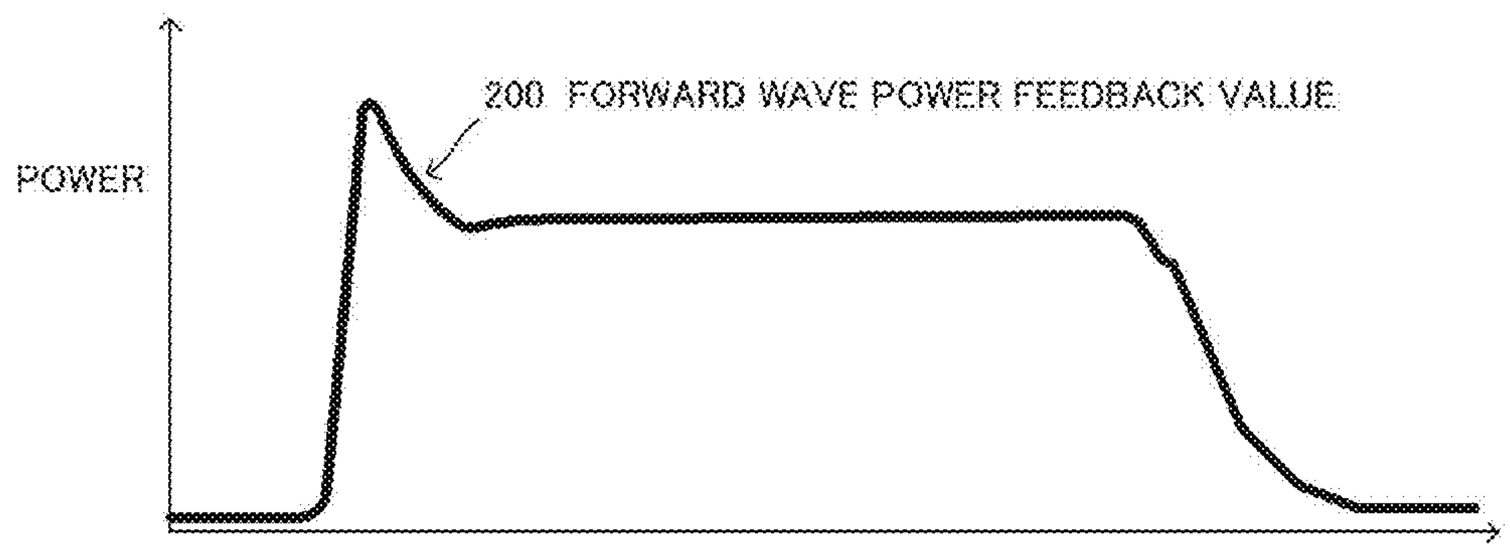
POWER
200 FORWARD WAVE POWER FEEDBACK VALUE

FIG. 3B

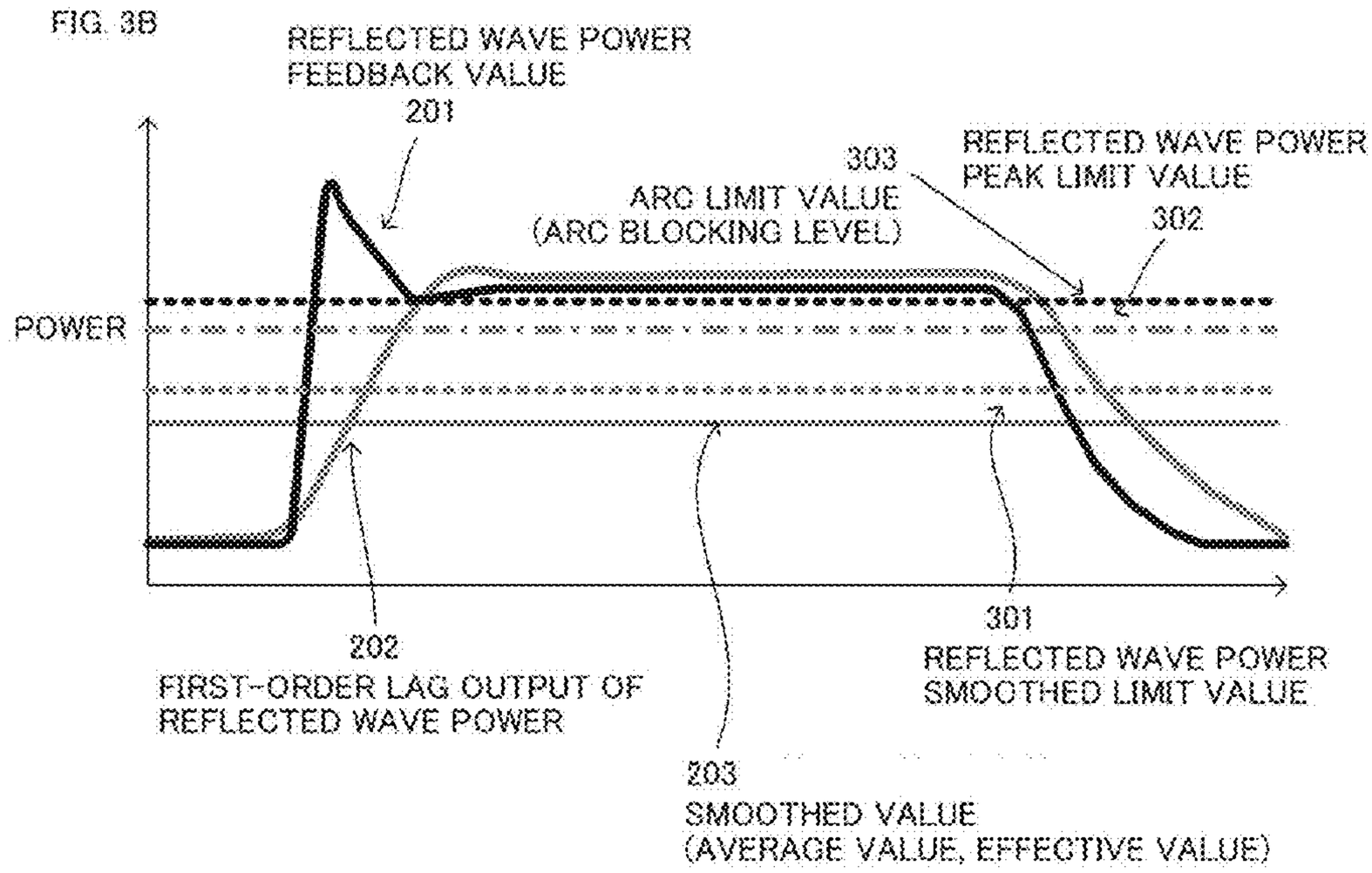
REFLECTED WAVE POWER
FEEDBACK VALUE
201
303
ARC LIMIT VALUE
(ARC BLOCKING LEVEL)
REFLECTED WAVE POWER
PEAK LIMIT VALUE
302
POWER
202
FIRST-ORDER LAG OUTPUT OF
REFLECTED WAVE POWER
301
REFLECTED WAVE POWER
SMOOTHED LIMIT VALUE
203
SMOOTHED VALUE
(AVERAGE VALUE, EFFECTIVE VALUE)

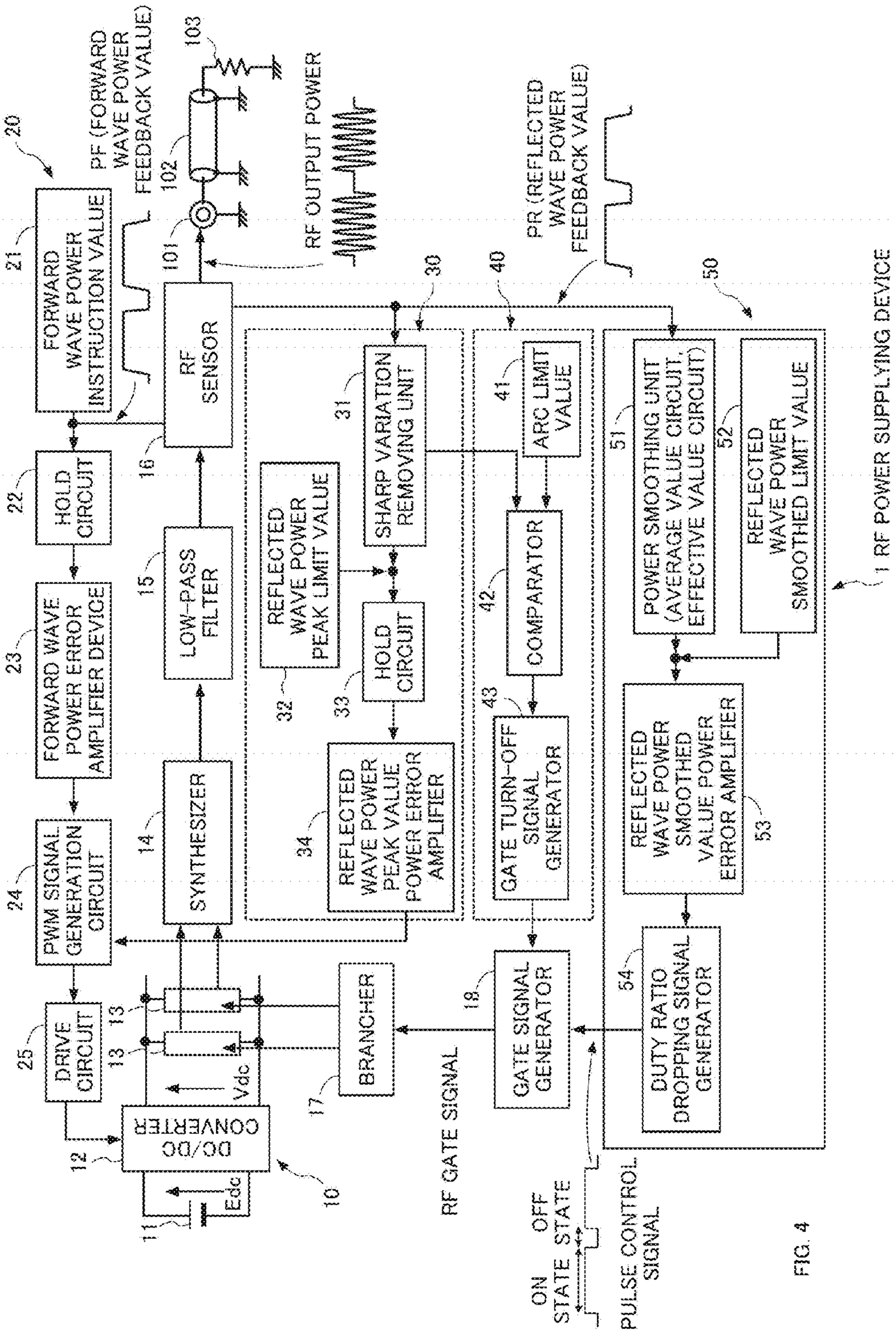
1 RF POWER SUPPLYING DEVICE
10
DC/DC CONVERTER
Edc
11
12
Vdc
13
13
DRIVE CIRCUIT
25
PWM SIGNAL GENERATION CIRCUIT
24
FORWARD WAVE POWER ERROR AMPLIFIER DEVICE
23
HOLD CIRCUIT
22
FORWARD WAVE POWER INSTRUCTION VALUE
21
20
PF (FORWARD WAVE POWER FEEDBACK VALUE)
RF SENSOR
16
101
102
103
RF OUTPUT POWER
SYNTHESIZER
14
LOW-PASS FILTER
15
BRANCHER
17
RF GATE SIGNAL
REFLECTED WAVE POWER PEAK LIMIT VALUE
32
SHARP VARIATION REMOVING UNIT
31
30
HOLD CIRCUIT
33
REFLECTED WAVE POWER PEAK VALUE POWER ERROR AMPLIFIER
34
ARC LIMIT VALUE
41
COMPARATOR
42
GATE TURN-OFF SIGNAL GENERATOR
43
40
GATE SIGNAL GENERATOR
18
PR (REFLECTED WAVE POWER FEEDBACK VALUE)
POWER SMOOTHING UNIT (AVERAGE VALUE CIRCUIT, EFFECTIVE VALUE CIRCUIT)
51
REFLECTED WAVE POWER SMOOTHED LIMIT VALUE
52
50
REFLECTED WAVE POWER SMOOTHED VALUE POWER ERROR AMPLIFIER
53
DUTY RATIO DROPPING SIGNAL GENERATOR
54
ON STATE
OFF STATE
PULSE CONTROL SIGNAL

FIG. 4

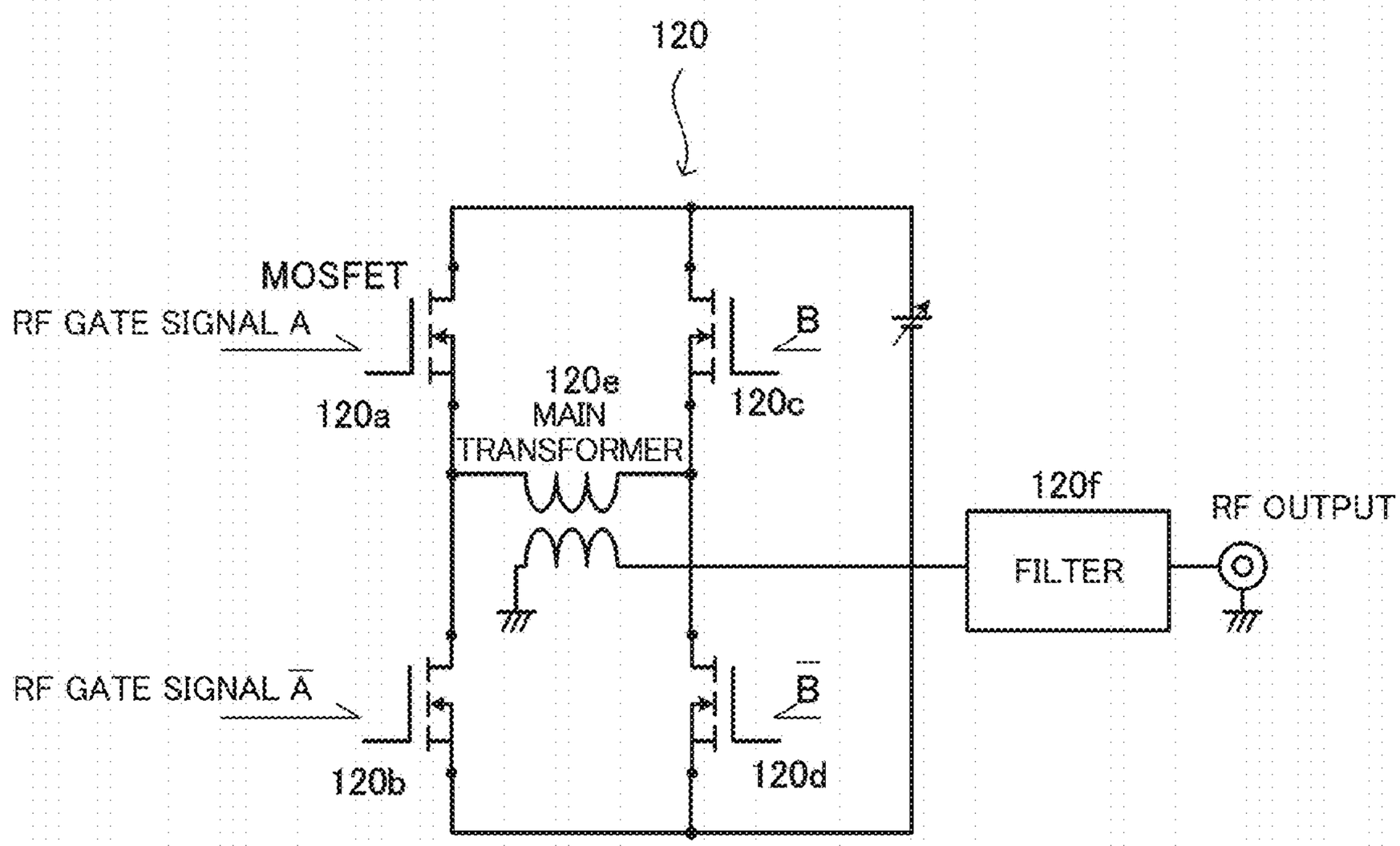
120
MOSFET
RF GATE SIGNAL A
120a
B
120c
120e
MAIN
TRANSFORMER
120f
FILTER
RF OUTPUT
RF GATE SIGNAL $\overline{A}$
120b
$\overline{B}$
120d

FIG. 5

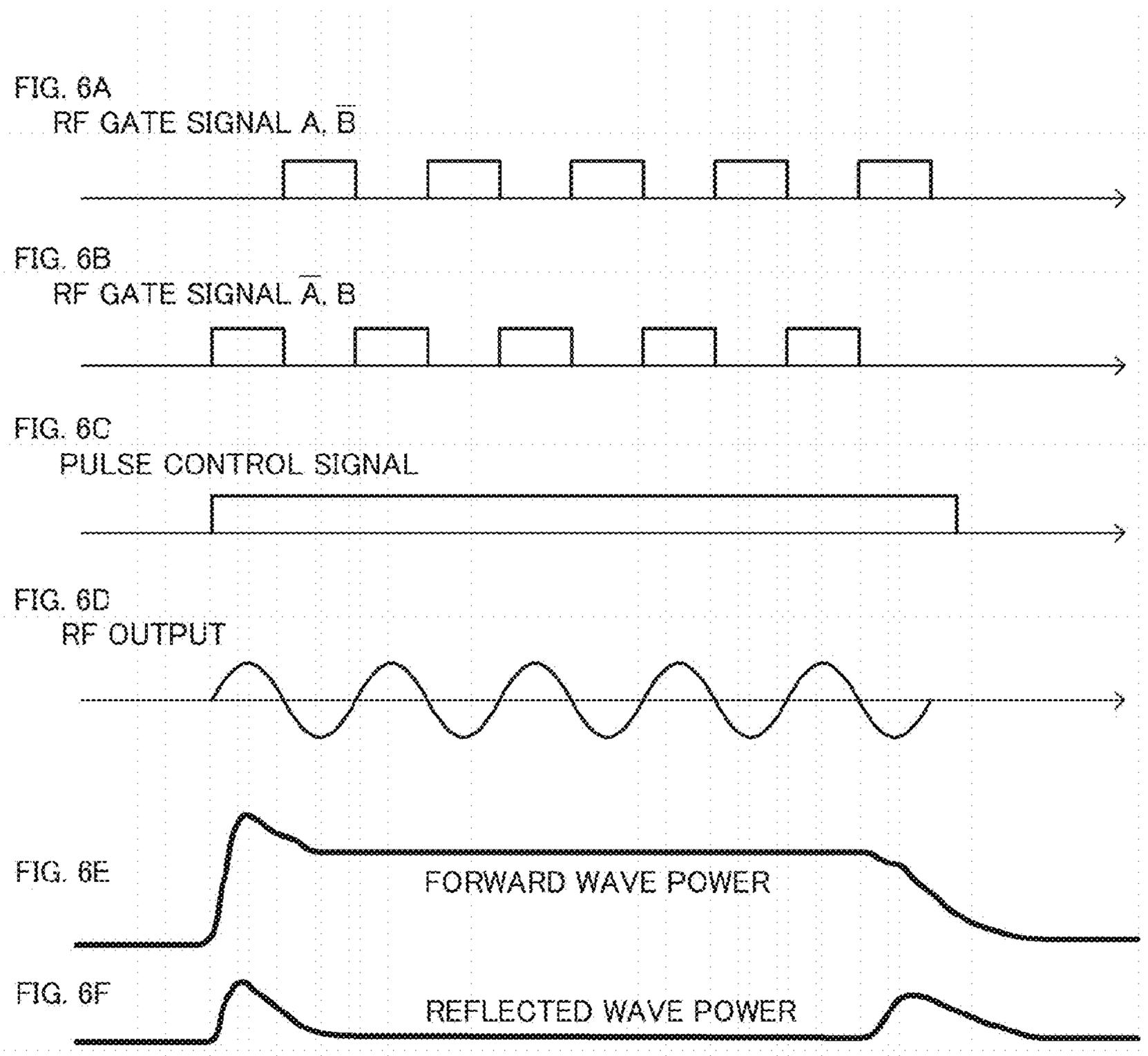
FIG. 6A
RF GATE SIGNAL A, $\overline{B}$
FIG. 6B
RF GATE SIGNAL $\overline{A}$, B
FIG. 6C
PULSE CONTROL SIGNAL
FIG. 6D
RF OUTPUT
FIG. 6E
FORWARD WAVE POWER
FIG. 6F
REFLECTED WAVE POWER

FIG. 7A

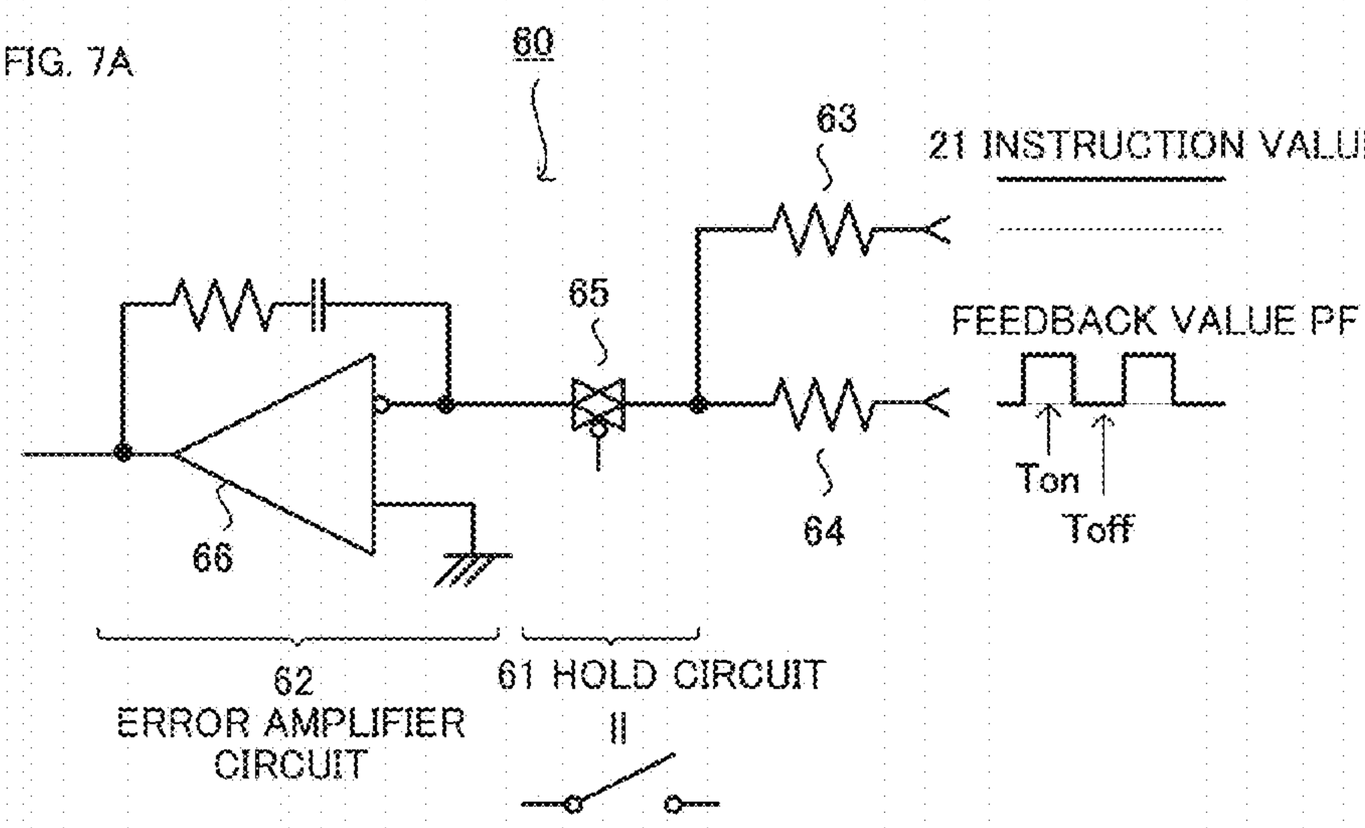
60
63
21 INSTRUCTION VALUE
65
FEEDBACK VALUE PF
Ton
Toff
64
66
62
ERROR AMPLIFIER CIRCUIT
61 HOLD CIRCUIT

FIG. 7B

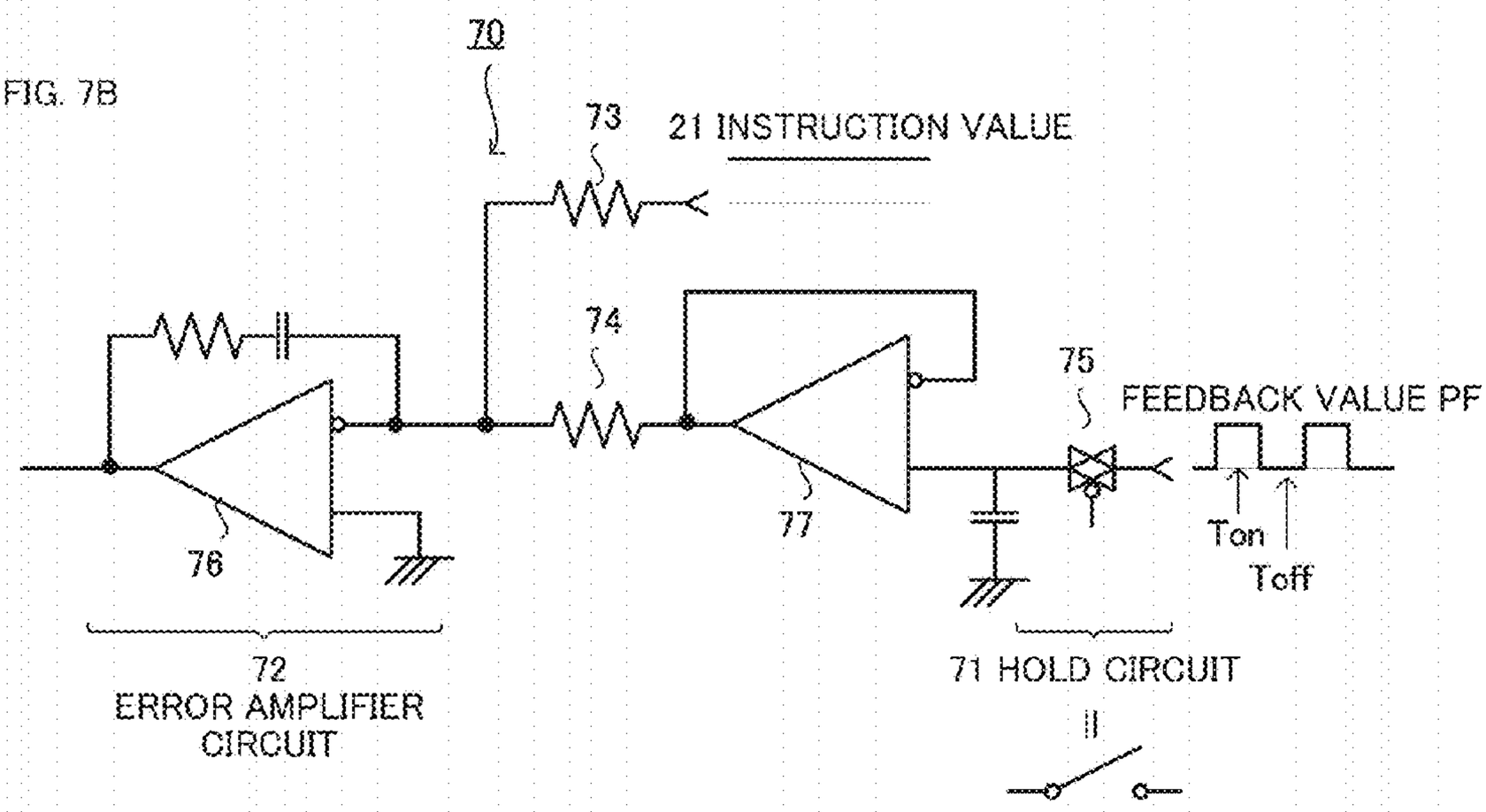
70
73
21 INSTRUCTION VALUE
74
75
FEEDBACK VALUE PF
Ton
Toff
76
77
72
ERROR AMPLIFIER CIRCUIT
71 HOLD CIRCUIT

FIG. 8A

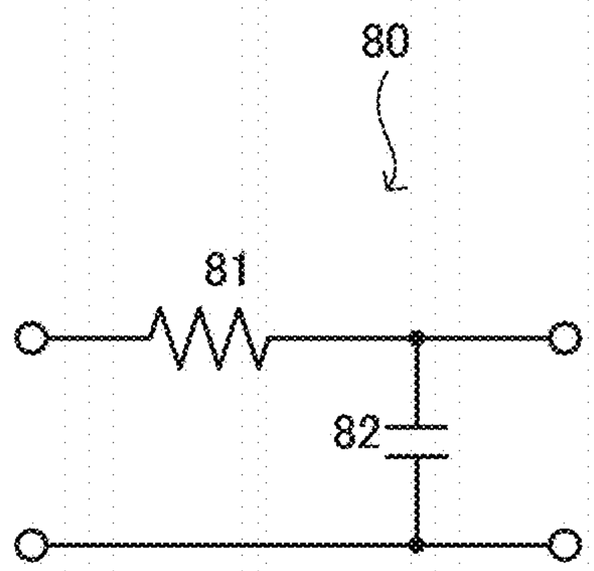
80
81
82

FIG. 8B

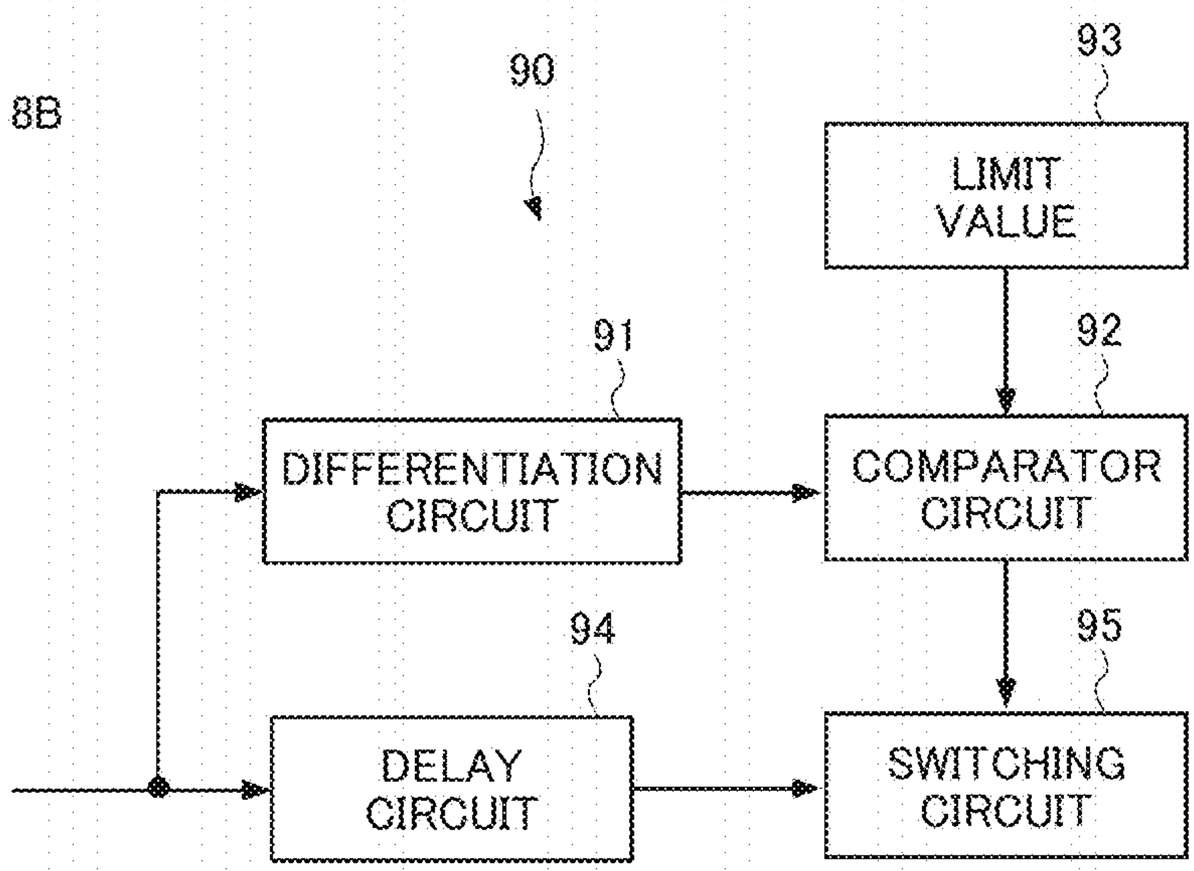
90
93
LIMIT VALUE
91
92
DIFFERENTIATION CIRCUIT
COMPARATOR CIRCUIT
94
95
DELAY CIRCUIT
SWITCHING CIRCUIT

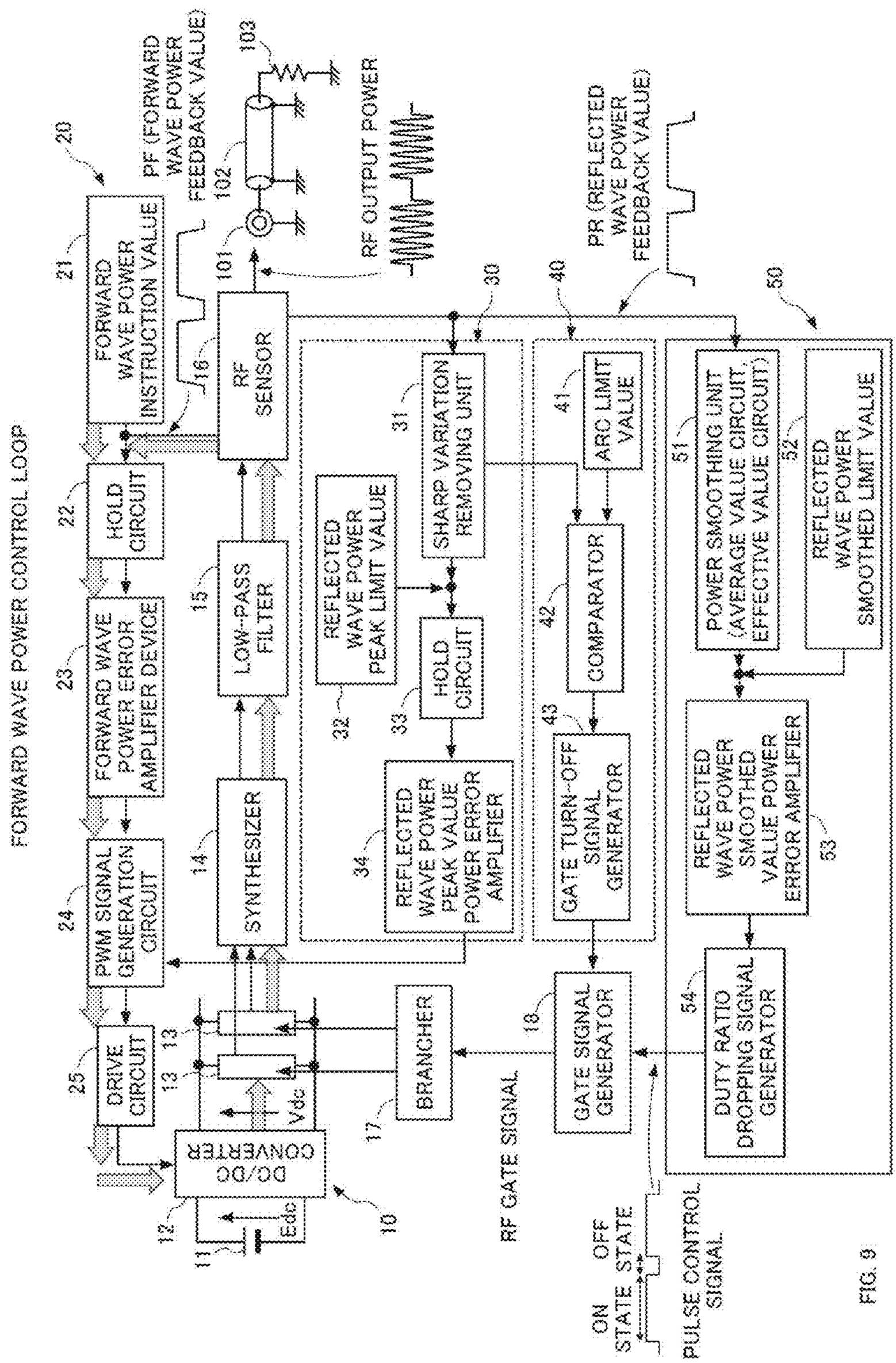
FORWARD WAVE POWER CONTROL LOOP
20
21
FORWARD WAVE POWER INSTRUCTION VALUE
PF (FORWARD WAVE POWER FEEDBACK VALUE)
103
102
101
RF OUTPUT POWER
PR (REFLECTED WAVE POWER FEEDBACK VALUE)
30
40
50
16
RF SENSOR
22
HOLD CIRCUIT
31
SHARP VARIATION REMOVING UNIT
41
ARC LIMIT VALUE
51
POWER SMOOTHING UNIT (AVERAGE VALUE CIRCUIT, EFFECTIVE VALUE CIRCUIT)
52
REFLECTED WAVE POWER SMOOTHED LIMIT VALUE
23
FORWARD WAVE POWER ERROR AMPLIFIER DEVICE
15
LOW-PASS FILTER
REFLECTED WAVE POWER PEAK LIMIT VALUE
42
COMPARATOR
32
33
HOLD CIRCUIT
43
GATE TURN-OFF SIGNAL GENERATOR
REFLECTED WAVE POWER SMOOTHED VALUE POWER ERROR AMPLIFIER
53
24
PWM SIGNAL GENERATION CIRCUIT
14
SYNTHESIZER
34
REFLECTED WAVE POWER PEAK VALUE POWER ERROR AMPLIFIER
54
DUTY RATIO DROPPING SIGNAL GENERATOR
25
DRIVE CIRCUIT
13
13
Vdc
17
BRANCHER
18
GATE SIGNAL GENERATOR
DC/DC CONVERTER
12
11
Edc
10
RF GATE SIGNAL
ON STATE
OFF STATE
PULSE CONTROL SIGNAL

FIG. 9

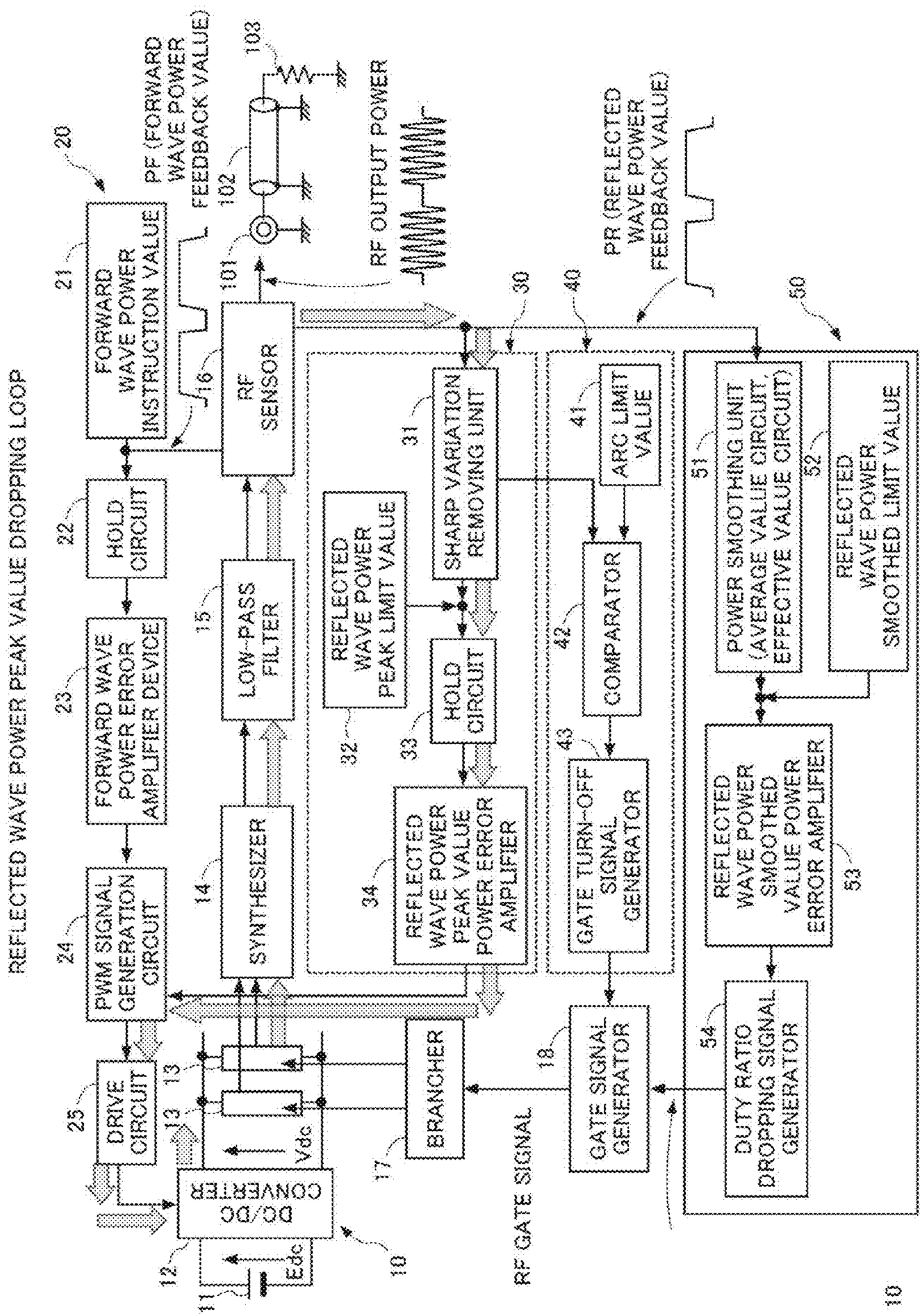
REFLECTED WAVE POWER PEAK VALUE DROPPING LOOP
20
21
FORWARD WAVE POWER INSTRUCTION VALUE
PF (FORWARD WAVE POWER FEEDBACK VALUE)
103
102
101
RF OUTPUT POWER
PR (REFLECTED WAVE POWER FEEDBACK VALUE)
16
RF SENSOR
30
40
50
22
HOLD CIRCUIT
31
SHARP VARIATION REMOVING UNIT
41
ARC LIMIT VALUE
51
POWER SMOOTHING UNIT (AVERAGE VALUE CIRCUIT, EFFECTIVE VALUE CIRCUIT)
52
REFLECTED WAVE POWER SMOOTHED LIMIT VALUE
15
LOW-PASS FILTER
REFLECTED WAVE POWER PEAK LIMIT VALUE
23
FORWARD WAVE POWER ERROR AMPLIFIER DEVICE
32
33
HOLD CIRCUIT
42
COMPARATOR
43
GATE TURN-OFF SIGNAL GENERATOR
REFLECTED WAVE POWER SMOOTHED VALUE POWER ERROR AMPLIFIER
53
14
SYNTHESIZER
34
REFLECTED WAVE POWER PEAK VALUE POWER ERROR AMPLIFIER
24
PWM SIGNAL GENERATION CIRCUIT
25
DRIVE CIRCUIT
13
13
Vdc
BRANCHER
17
18
GATE SIGNAL GENERATOR
54
DUTY RATIO DROPPING SIGNAL GENERATOR
DC/DC CONVERTER
12
11
Edc
10
RF GATE SIGNAL

FIG. 10

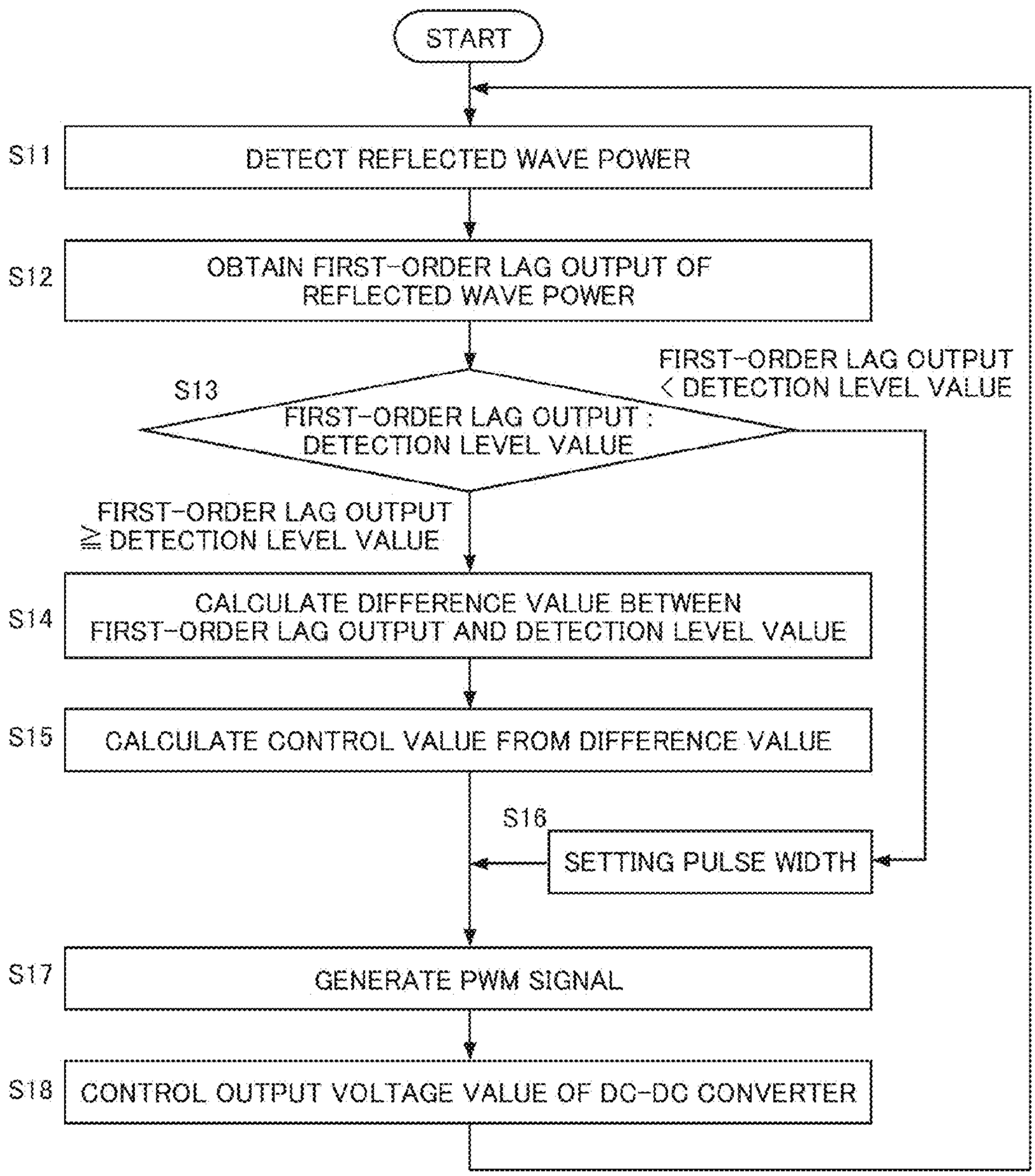
START
S11
DETECT REFLECTED WAVE POWER
S12
OBTAIN FIRST-ORDER LAG OUTPUT OF REFLECTED WAVE POWER
S13
FIRST-ORDER LAG OUTPUT : DETECTION LEVEL VALUE
FIRST-ORDER LAG OUTPUT < DETECTION LEVEL VALUE
FIRST-ORDER LAG OUTPUT ≧ DETECTION LEVEL VALUE
S14
CALCULATE DIFFERENCE VALUE BETWEEN FIRST-ORDER LAG OUTPUT AND DETECTION LEVEL VALUE
S15
CALCULATE CONTROL VALUE FROM DIFFERENCE VALUE
S16
SETTING PULSE WIDTH
S17
GENERATE PWM SIGNAL
S18
CONTROL OUTPUT VOLTAGE VALUE OF DC-DC CONVERTER

FIG. 11

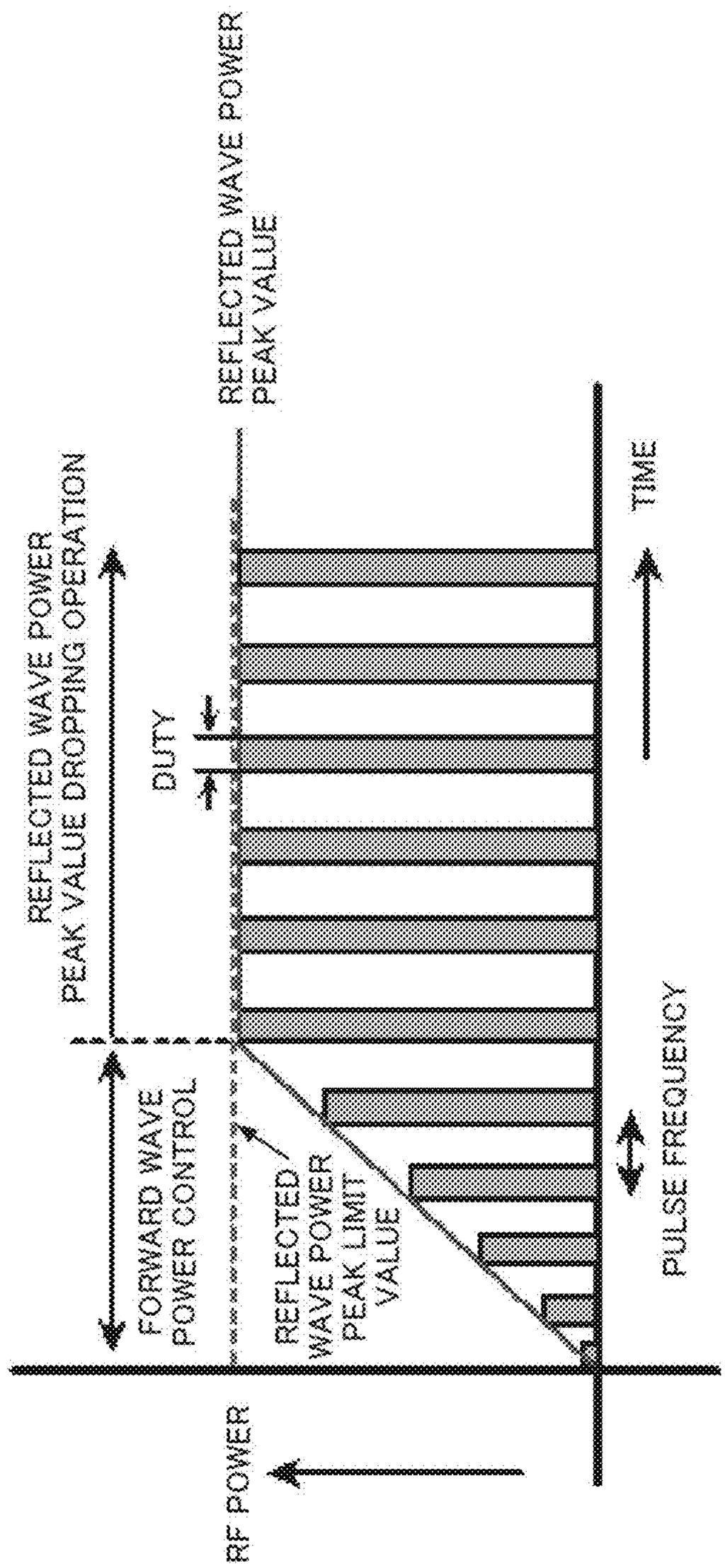
REFLECTED WAVE POWER
PEAK VALUE
REFLECTED WAVE POWER
PEAK VALUE DROPPING OPERATION
DUTY
TIME
FORWARD WAVE
POWER CONTROL
REFLECTED
WAVE POWER
PEAK LIMIT
VALUE
PULSE FREQUENCY
RF POWER

FIG. 12

FIG. 13A

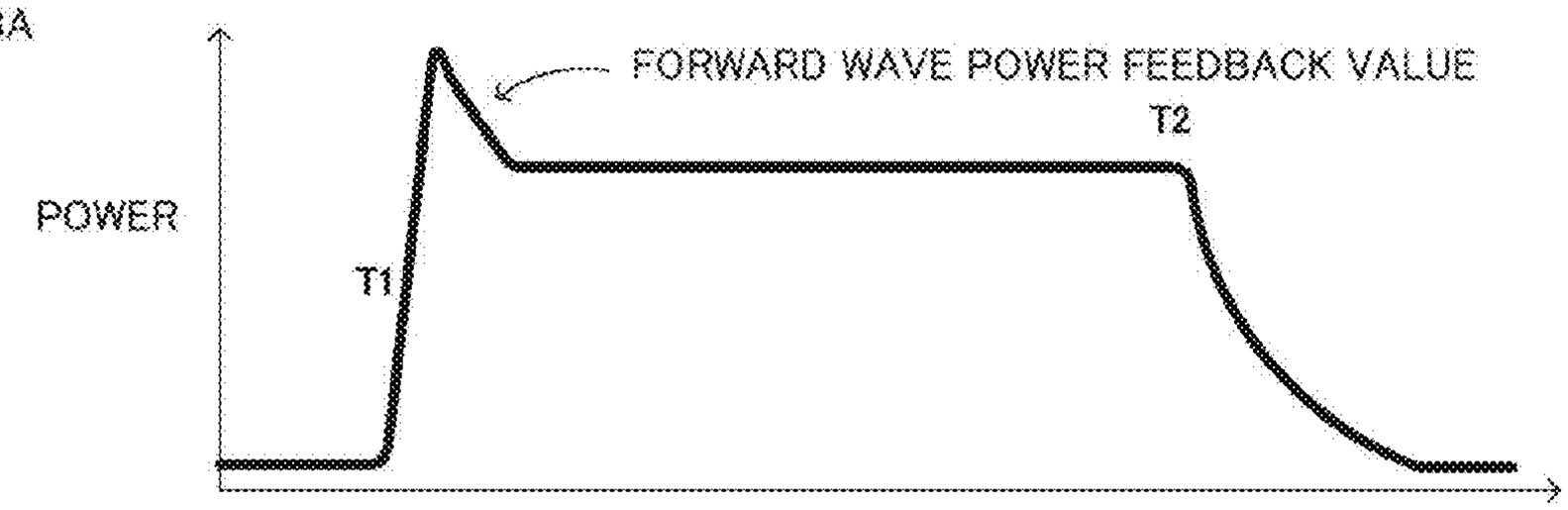

FIG. 13B

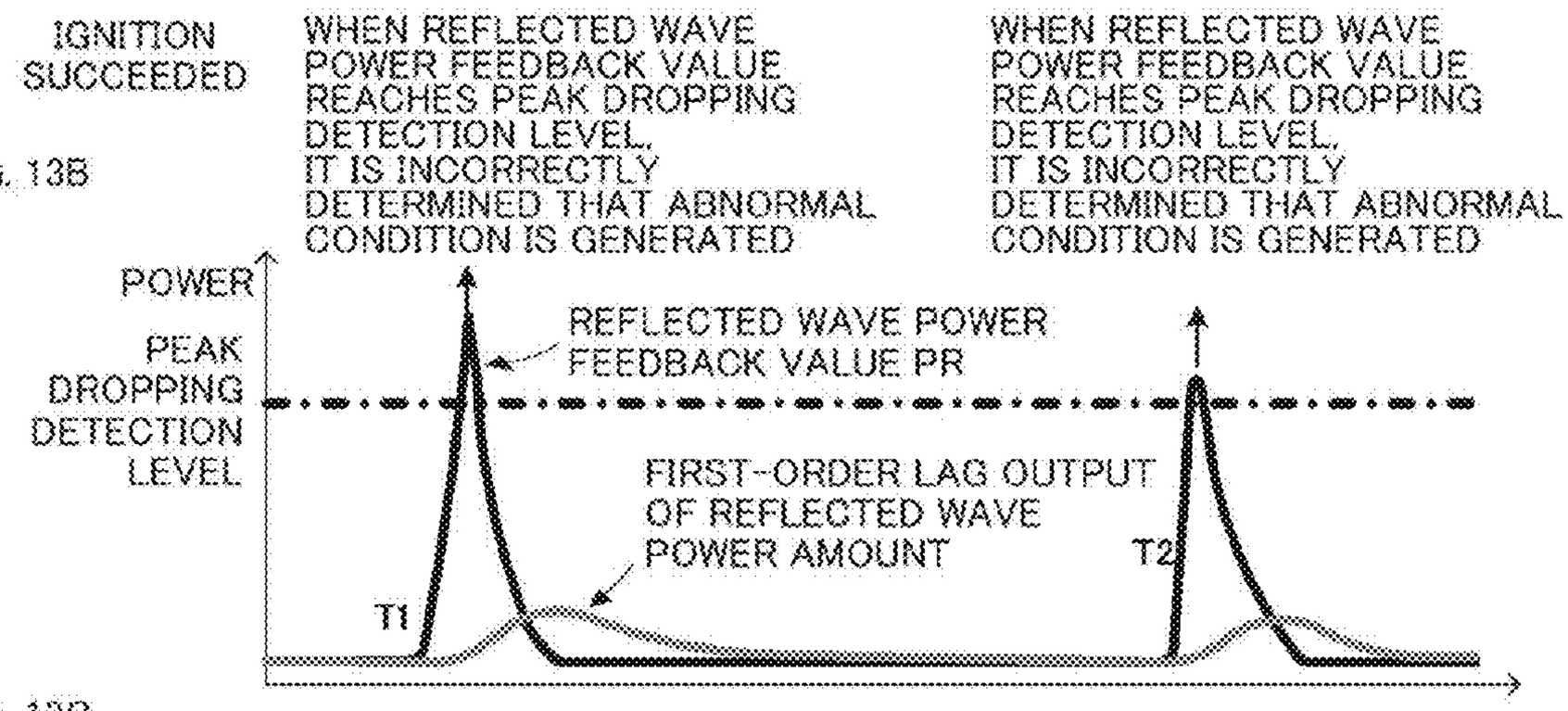

FIG. 13C

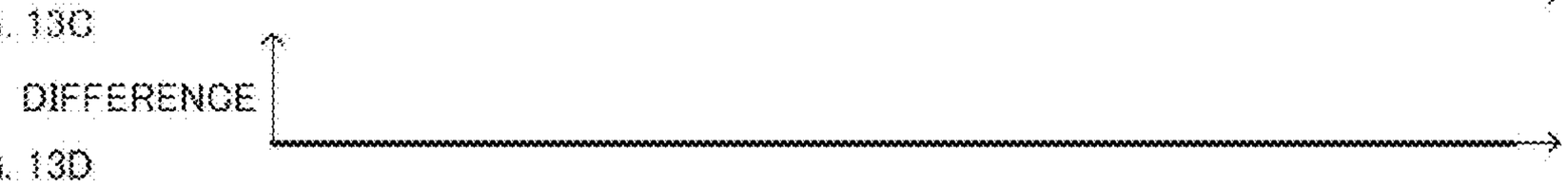

FIG. 13D

FIG. 13E

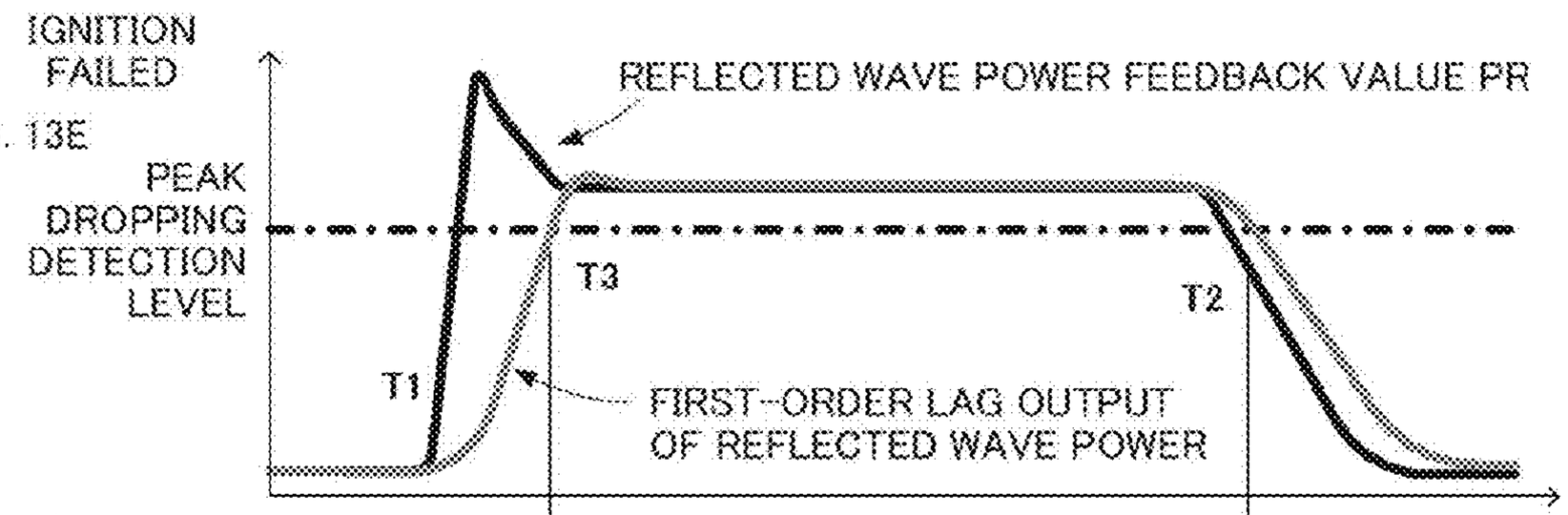

FIG. 13F

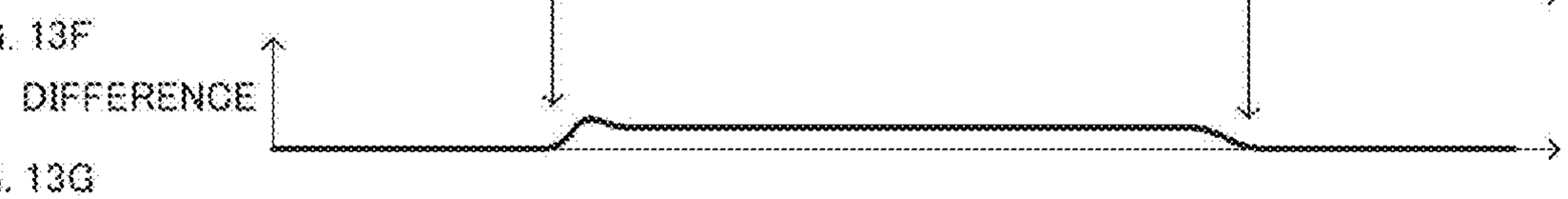

FIG. 13G

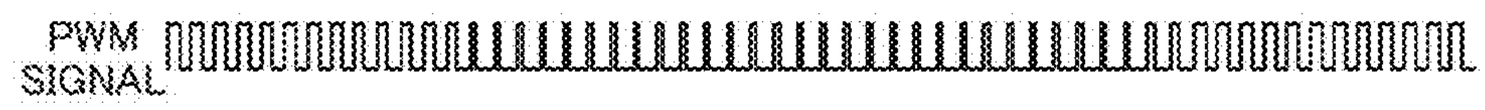

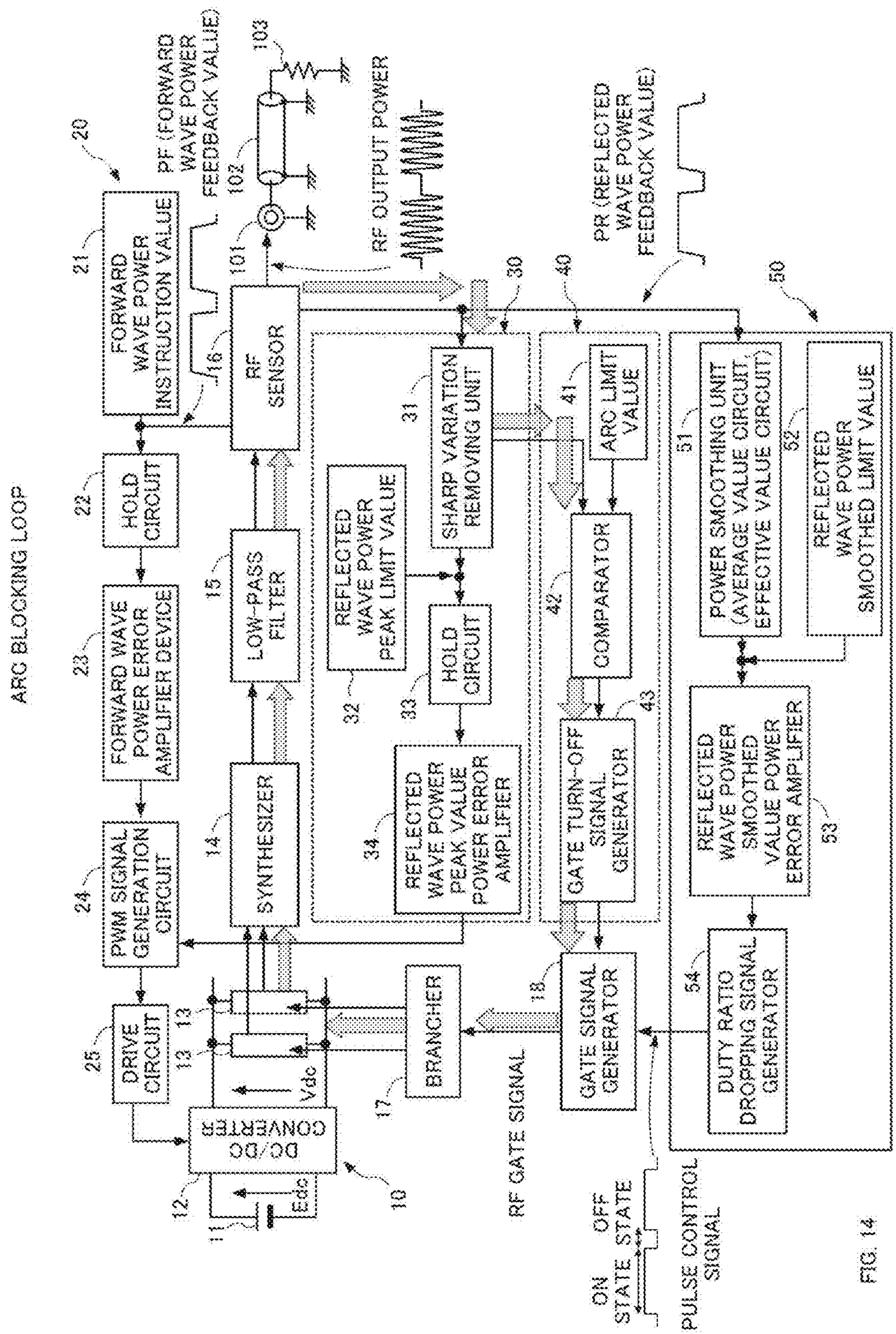
ARC BLOCKING LOOP
20
21
FORWARD WAVE POWER INSTRUCTION VALUE
PF (FORWARD WAVE POWER FEEDBACK VALUE)
103
102
101
RF OUTPUT POWER
PR (REFLECTED WAVE POWER FEEDBACK VALUE)
16
RF SENSOR
30
40
50
22
HOLD CIRCUIT
31
SHARP VARIATION REMOVING UNIT
41
ARC LIMIT VALUE
51
POWER SMOOTHING UNIT (AVERAGE VALUE CIRCUIT, EFFECTIVE VALUE CIRCUIT)
52
REFLECTED WAVE POWER SMOOTHED LIMIT VALUE
23
FORWARD WAVE POWER ERROR AMPLIFIER DEVICE
15
LOW-PASS FILTER
REFLECTED WAVE POWER PEAK LIMIT VALUE
32
33
HOLD CIRCUIT
42
COMPARATOR
43
GATE TURN-OFF SIGNAL GENERATOR
REFLECTED WAVE POWER SMOOTHED VALUE POWER ERROR AMPLIFIER
53
24
PWM SIGNAL GENERATION CIRCUIT
14
SYNTHESIZER
34
REFLECTED WAVE POWER PEAK VALUE POWER ERROR AMPLIFIER
25
DRIVE CIRCUIT
13
13
Vdc
BRANCHER
17
18
GATE SIGNAL GENERATOR
54
DUTY RATIO DROPPING SIGNAL GENERATOR
DC/DC CONVERTER
12
Edc
11
10
RF GATE SIGNAL
ON STATE
OFF STATE
PULSE CONTROL SIGNAL

FIG. 14

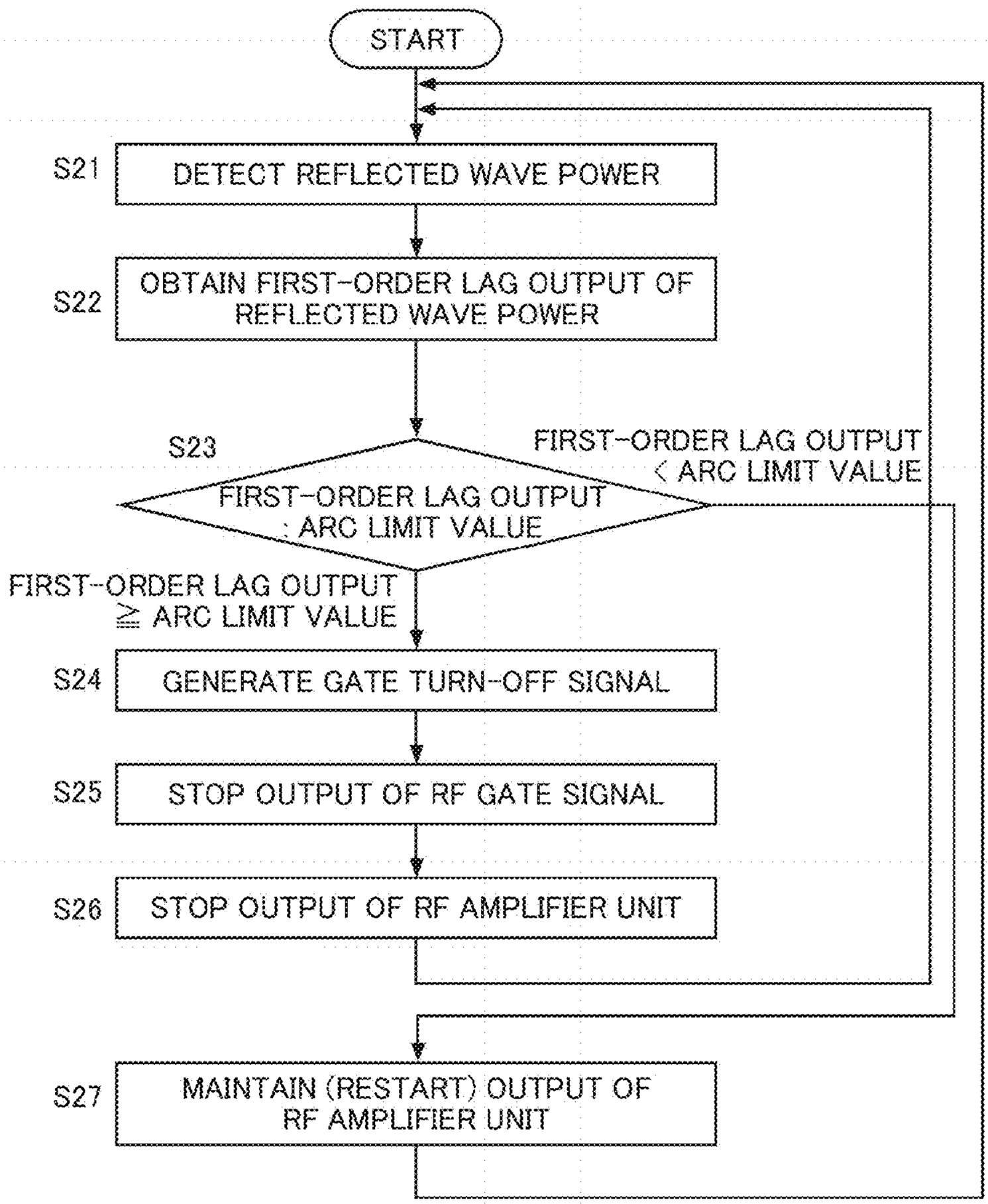
START
S21
DETECT REFLECTED WAVE POWER
S22
OBTAIN FIRST-ORDER LAG OUTPUT OF REFLECTED WAVE POWER
S23
FIRST-ORDER LAG OUTPUT : ARC LIMIT VALUE
FIRST-ORDER LAG OUTPUT < ARC LIMIT VALUE
FIRST-ORDER LAG OUTPUT ≧ ARC LIMIT VALUE
S24
GENERATE GATE TURN-OFF SIGNAL
S25
STOP OUTPUT OF RF GATE SIGNAL
S26
STOP OUTPUT OF RF AMPLIFIER UNIT
S27
MAINTAIN (RESTART) OUTPUT OF RF AMPLIFIER UNIT

FIG. 15

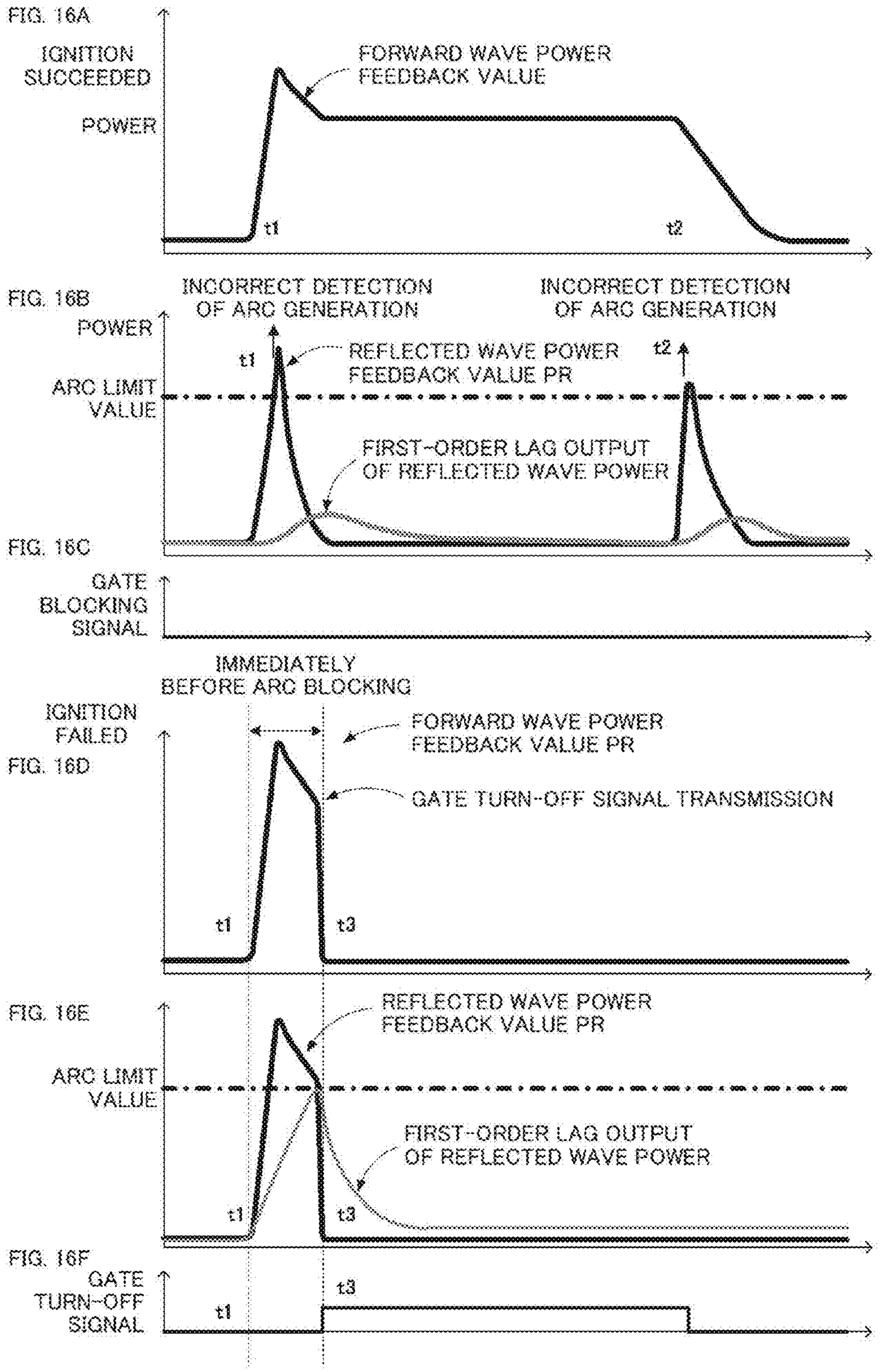
FIG. 16A
IGNITION SUCCEEDED
POWER
FORWARD WAVE POWER FEEDBACK VALUE
t1
t2
FIG. 16B
INCORRECT DETECTION OF ARC GENERATION
INCORRECT DETECTION OF ARC GENERATION
POWER
t1
t2
REFLECTED WAVE POWER FEEDBACK VALUE PR
ARC LIMIT VALUE
FIRST-ORDER LAG OUTPUT OF REFLECTED WAVE POWER
FIG. 16C
GATE BLOCKING SIGNAL
IMMEDIATELY BEFORE ARC BLOCKING
IGNITION FAILED
FIG. 16D
FORWARD WAVE POWER FEEDBACK VALUE PR
GATE TURN-OFF SIGNAL TRANSMISSION
t1
t3
FIG. 16E
REFLECTED WAVE POWER FEEDBACK VALUE PR
ARC LIMIT VALUE
FIRST-ORDER LAG OUTPUT OF REFLECTED WAVE POWER
t1
t3
FIG. 16F
GATE TURN-OFF SIGNAL
t1
t3

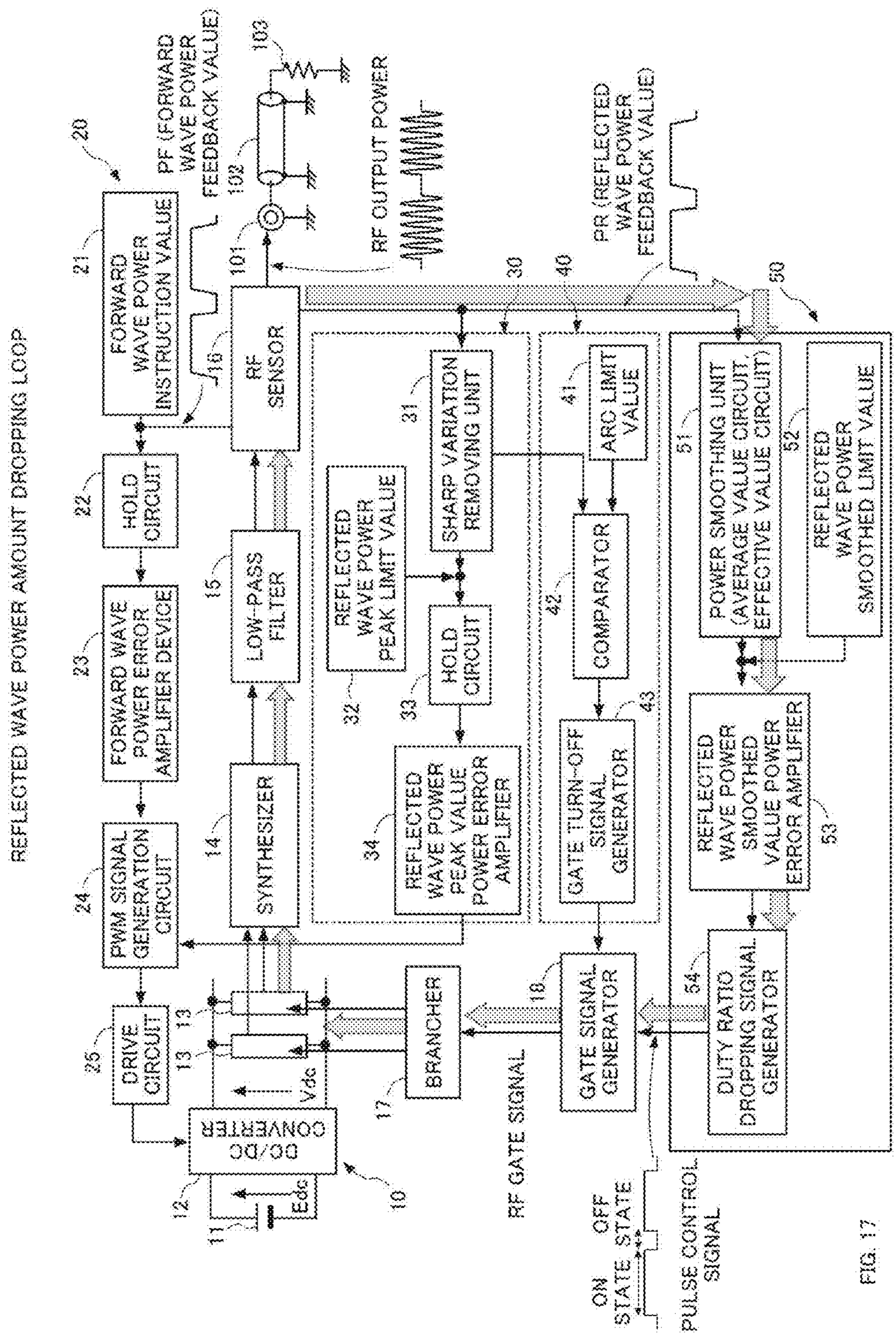
REFLECTED WAVE POWER AMOUNT DROPPING LOOP
20
21
FORWARD WAVE POWER INSTRUCTION VALUE
PF (FORWARD WAVE POWER FEEDBACK VALUE)
103
102
101
RF OUTPUT POWER
PR (REFLECTED WAVE POWER FEEDBACK VALUE)
30
40
50
16
RF SENSOR
22
HOLD CIRCUIT
15
LOW-PASS FILTER
23
FORWARD WAVE POWER ERROR AMPLIFIER DEVICE
14
SYNTHESIZER
24
PWM SIGNAL GENERATION CIRCUIT
25
DRIVE CIRCUIT
13
13
Vdc
DC/DC CONVERTER
12
11
Edc
10
17
BRANCHER
31
SHARP VARIATION REMOVING UNIT
32
REFLECTED WAVE POWER PEAK LIMIT VALUE
33
HOLD CIRCUIT
34
REFLECTED WAVE POWER PEAK VALUE POWER ERROR AMPLIFIER
41
ARC LIMIT VALUE
42
COMPARATOR
43
GATE TURN-OFF SIGNAL GENERATOR
18
GATE SIGNAL GENERATOR
RF GATE SIGNAL
51
POWER SMOOTHING UNIT (AVERAGE VALUE CIRCUIT, EFFECTIVE VALUE CIRCUIT)
52
REFLECTED WAVE POWER SMOOTHED LIMIT VALUE
53
REFLECTED WAVE POWER SMOOTHED VALUE POWER ERROR AMPLIFIER
54
DUTY RATIO DROPPING SIGNAL GENERATOR
ON STATE
OFF STATE
PULSE CONTROL SIGNAL

FIG. 17

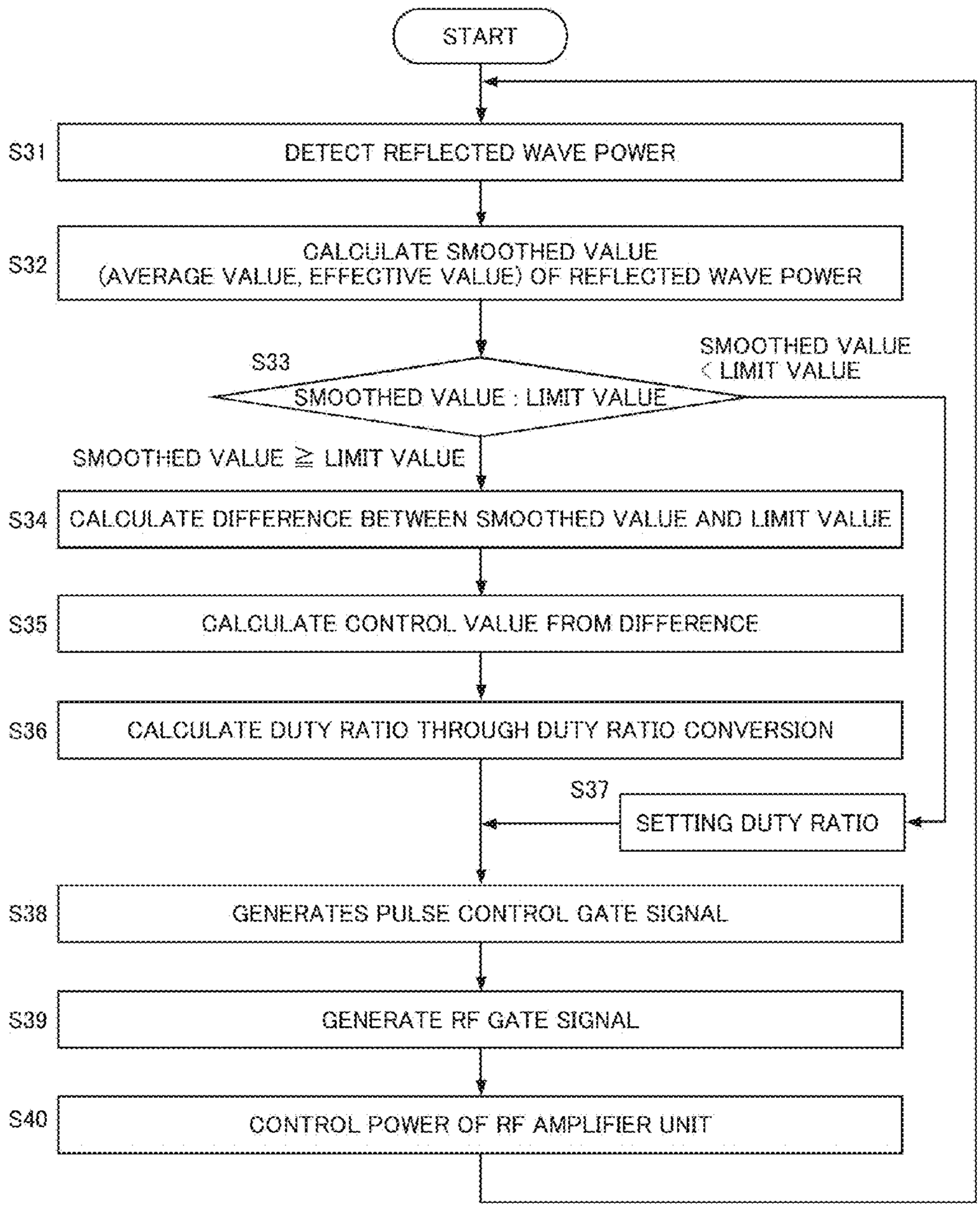
START
S31
DETECT REFLECTED WAVE POWER
S32
CALCULATE SMOOTHED VALUE
(AVERAGE VALUE, EFFECTIVE VALUE) OF REFLECTED WAVE POWER
S33
SMOOTHED VALUE : LIMIT VALUE
SMOOTHED VALUE < LIMIT VALUE
SMOOTHED VALUE ≧ LIMIT VALUE
S34
CALCULATE DIFFERENCE BETWEEN SMOOTHED VALUE AND LIMIT VALUE
S35
CALCULATE CONTROL VALUE FROM DIFFERENCE
S36
CALCULATE DUTY RATIO THROUGH DUTY RATIO CONVERSION
S37
SETTING DUTY RATIO
S38
GENERATES PULSE CONTROL GATE SIGNAL
S39
GENERATE RF GATE SIGNAL
S40
CONTROL POWER OF RF AMPLIFIER UNIT

FIG. 18

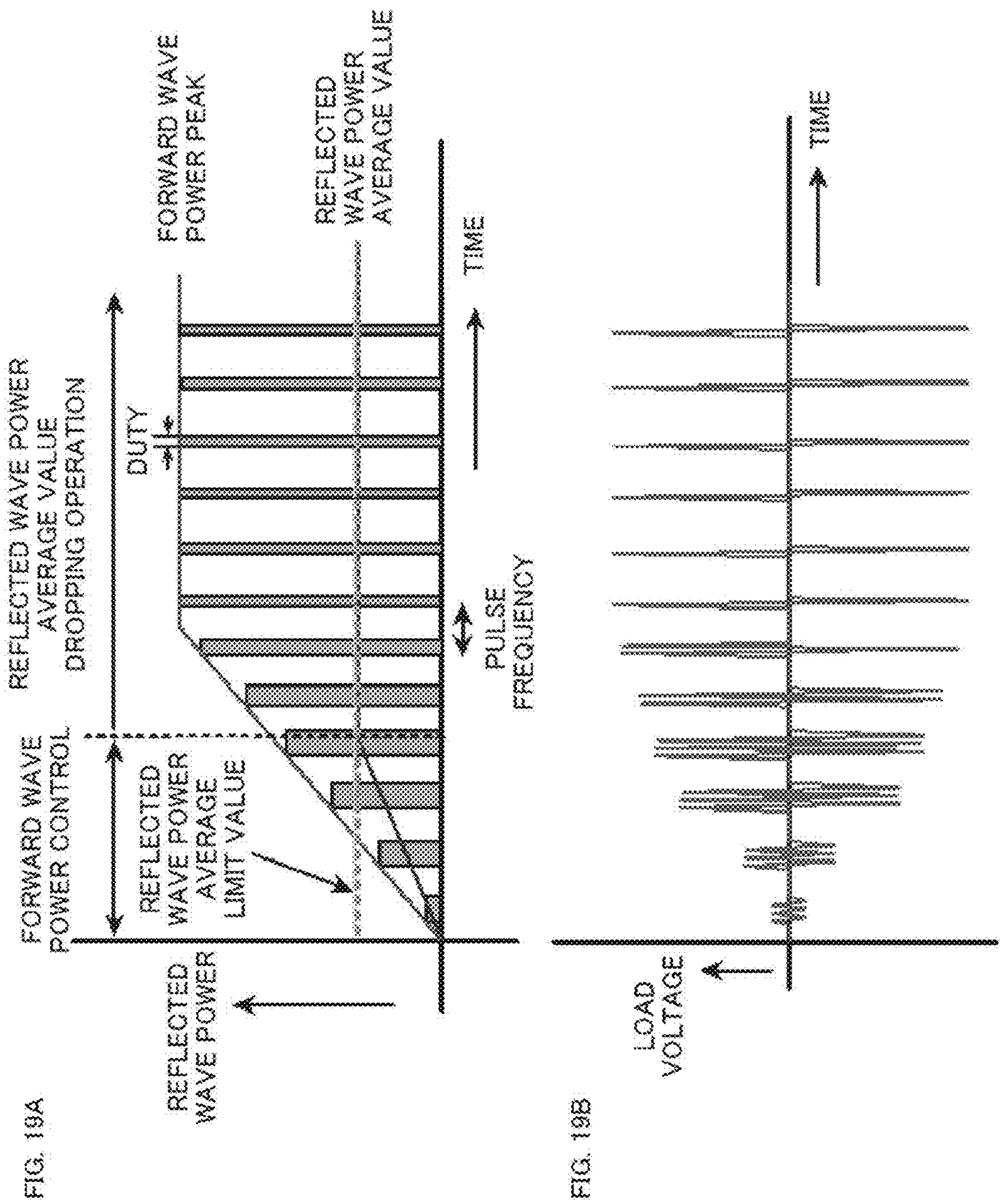

FIG. 19A

FIG. 19B

FIG. 20A

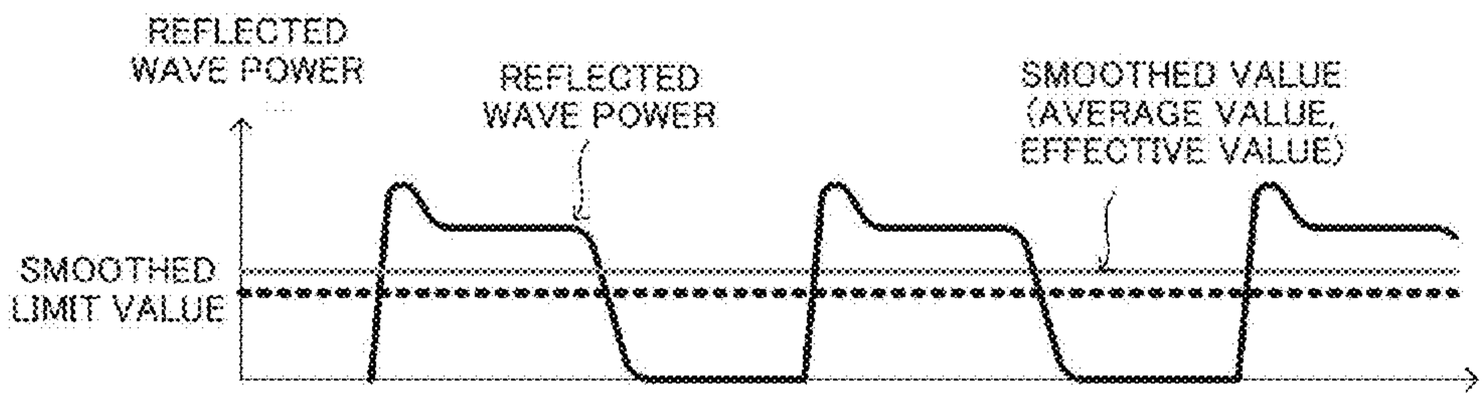

FIG. 20B

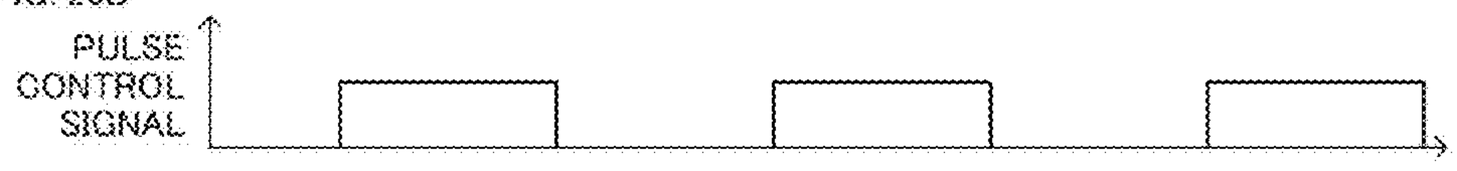

FIG. 20C

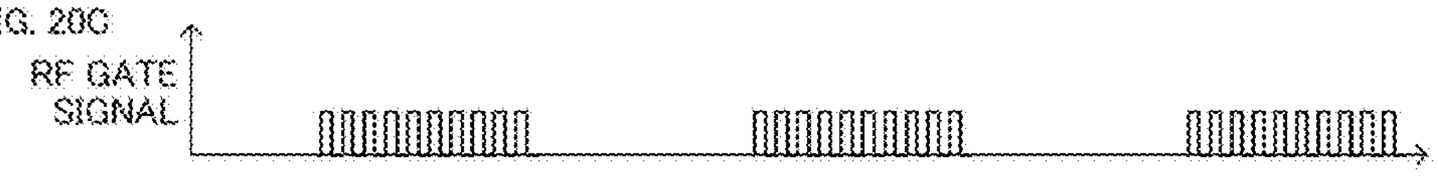

FIG. 20D

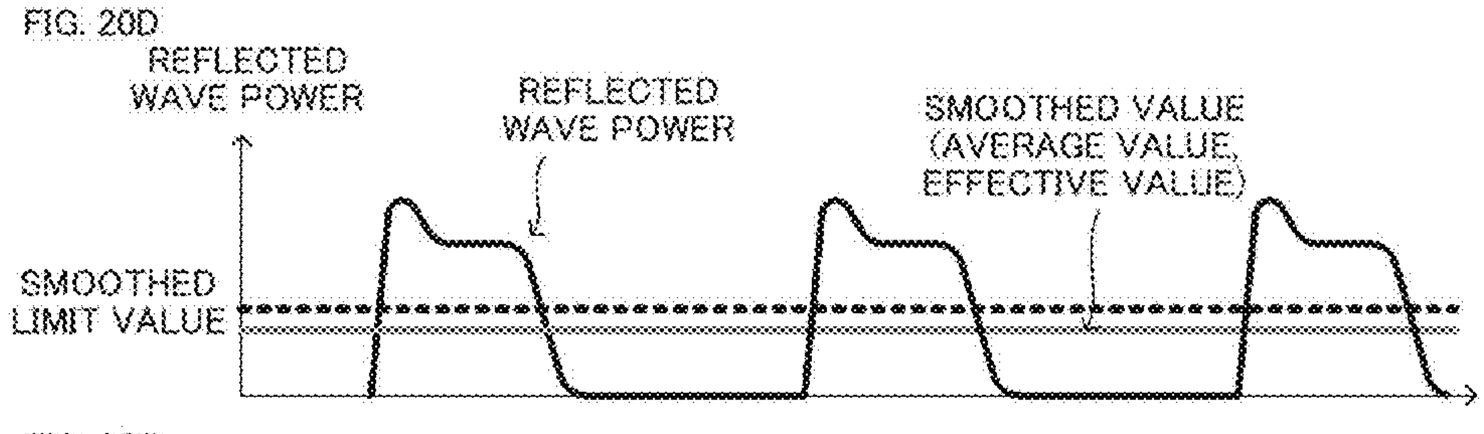

FIG. 20E

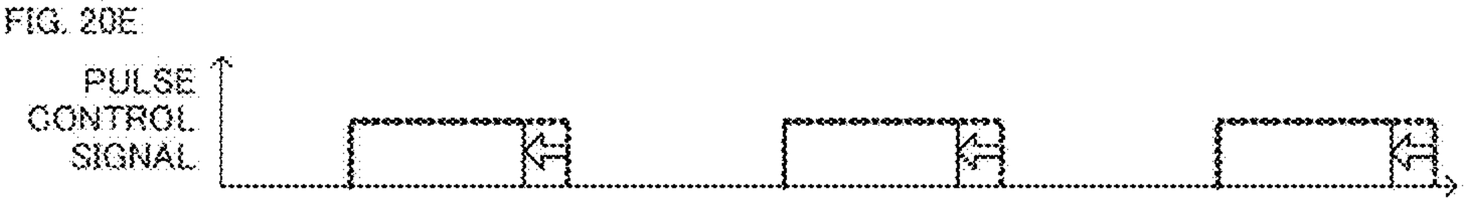

FIG. 20F

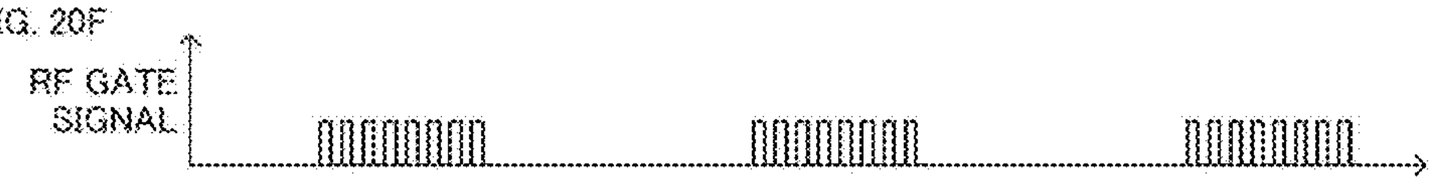

HIGH-FREQUENCY POWER SUPPLY DEVICE AND REFLECTED WAVE POWER CONTROL METHOD

TECHNICAL FIELD

[0001] The present invention relates to a reflected wave power control method and an RF power supplying device for controlling reflected wave power that is transmitted from a load side to an RF generator side when RF power is supplied from the RF generator to the load.

BACKGROUND ART

[0002] An RF generator that converts the DC of a DC power supply to RF AC through the switching operation is known. As this RF generator, a class-D RF generator using a class-D amplifier circuit (Class D: IEC International Standard IEC 60268-3 4 classes of operation) is known.

[0003] A class-D RF generator causes the RF power amplifier device to perform the switching operation via the RF gate signal, which has a predetermined duty ratio, to convert the DC of a DC power supply to RF AC and supplies the obtained RF AC to a load as RF forward wave power. The class-D RF generator adjusts the output through the pulse operation. The pulse operation is performed in a driving mode in which ON state and the OFF state are alternated by the RF gate signal. In the ON state, the switching operation is performed by the RF power amplifier device and RF power is output; in the OFF state, the switching operation is not performed and RF power is not output. The RF output power is adjusted by changing the duty ratio that is a time ratio between the ON state and the OFF state. The duty ratio between the ON state and the OFF state can be controlled by a duty ratio between the ON state and the OFF state of the pulse control signal. In this specification, RF means high frequency.

[0004] When RF power is supplied from an RF power generator to a load, for example, to a load such as a plasma treatment device, the load impedance varies according to the state of a plasma discharge. When the load impedance varies, reflected wave power that returns from the load side to the RF generator side varies.

[0005] In some cases, reflected wave power affects a class-D RF generator. For example, an RF power amplifier device, which is one of the components of a class-D RF generator, may suffer thermal damage due to heat generated by an internal loss caused by reflected wave power or may suffer insulation damage due to a surge voltage of reflected wave power. A still larger reflected wave power sometimes damages the DC power supply that is one of the components of a class-D RF generator.

[0006] In particular, when a class-D RF generator supplies RF power to a plasma load through the pulse operation, forward wave power all returns to the generator side as reflected wave power in the non-ignition state in which plasma is not yet ignited. Therefore, a class-D RF generator is required to tolerate total reflected wave power. In the description below, reflected wave power generated when forward wave power all returns to the generator side is called total reflected wave power, and the ability to tolerate total reflected wave power during RF power supply is called total reflected wave power tolerance.

[0007] The total reflected wave power tolerance includes the ability not only to prevent an RF power amplifier device from being damaged by total reflected wave power but also to continue the plasma ignition operation by continuously supplying power without interruption from the time the ignition operation is started to the time the supply of RF power is stopped upon determination that the ignition has failed.

[0008] Conventionally, to realize such total reflected wave power tolerance, the present applicant has proposed a plasma generation power supply (see Patent Literature 1). Patent Literature 1 describes a technology that uses load impedance, viewed from an RF power amplifier device, in the delay state in order to suppress accumulated carriers in the body diode of the RF power amplifier device and thereby reduces the switching loss of the circuit. To realize total reflected wave power tolerance, it is further required to limit the ignition time, necessary for the ignition operation at plasma ignition time, in advance and, by doing so, to limit the reflected wave power within this ignition time to the same power level as that of the rated power of forward wave power.

[0009] Not only a class-D RF generator, a class-C RF generator is also known as a RF generator that is usually used. For use by a usually used RF generator device such as a class-C RF generator, a technology is known that reduces forward wave power on the supplying side in order to reduce the supply of reflected wave power to a level equal to or lower than the rated output when reflected wave power is generated. In this way, the technology prevents the device on the RF generator side from being damaged (Patent Literature 2 to Patent Literature 7).

[0010] Patent Literatures 2 and 3 disclose technologies for stopping the supply of power, and Patent Literatures 4 to 7 disclose technologies for reducing forward wave power.

[0011] Patent literature 2 describes a shutdown method for controlling the forward wave power value of an RF plasma power supply so that the reflected wave power value becomes equal to or lower than 10% to 20% of the rated output. Patent literature 3 describes a microwave power supply system that uses a signal, output from a reflected wave power detector, to temporally integrate the differences between the magnitude of the signal, corresponding to the reflected microwave power, and the charge/discharge reference value and, if the magnitude of the integrated signal having the magnitude corresponding to the integrated value exceeds the allowable reference value, shuts down the supply of power.

[0012] Patent literature 4 describes a technology that reduces the output power using a mixer when reflected wave power exceeds the limit value. Patent literature 5 describes a technology that generates a power control signal using the power reduction signal, output from the reflected wave power detection signal, and forward wave power. Patent literature 6 describes a technology that calculates the difference between the reflected wave power, which is detected and fed back, and the reflected wave power that is set and, based on the calculated difference, drops the forward wave power. Patent literature 7 describes a technology that calculates a reflected wave coefficient based on the reflected wave power, corrects the magnitude of the gain of the attenuator according to the calculated reflected wave coefficient, and supplies required power to the load.

[0013] Patent literature 8 describes a technology that differentiates the output of the sensor, which measures reflected wave power, and determines the generation of an abnormal discharge based on the degree of temporal variations in the reflected wave of RF power output by the differentiation.

CITATION LIST

Patent Literatures

[0014] Patent Literature 1: Japanese Patent No. 3641785 (paragraph [0046], paragraph [0047])

[0015] Patent Literature 2: Japanese Patent Publication No. 7-32078 (paragraph [0003], paragraph [0005])

[0016] Patent Literature 3: Japanese Patent Application Publication No. 2004-71269 (paragraph [0017], paragraph [0018])

[0017] Patent Literature 4: Japanese Patent Application Publication No. 10-257774 (paragraph [0028]-paragraph [0031])

[0018] Patent Literature 5: Japanese Patent No. 3998986 (paragraph [0028])

[0019] Patent Literature 6: Japanese Patent Application Publication No. 2004-8893 (paragraph [0019])

[0020] Patent Literature 7: Japanese Patent Application Publication No. 2005-136933 (paragraph [0013])

[0021] Patent Literature 8: Japanese Patent No. 3893276 (paragraph [0008], paragraph [0025])

SUMMARY OF THE INVENTION

Technical Problem

[0022] When a class-D RF generator supplies RF power to a plasma load through the pulse operation, it is required, in the non-ignition state before plasma is ignited, to supply a high load-end power to the load against total reflected wave power, generated when forward wave power all returns to the generator side as reflected wave power and, thereby, to increase plasma ignition ability during the pulse operation, with no damage to the RF power amplifier device caused by total reflected wave power at pulse operation time.

[0023] According to the technology described in Patent Literature 1, the load impedance is used in the delay state to reduce the switching loss of the circuit. However, when the plasma ignition time is limited to realize total reflected wave power tolerance, plasma may remain un-ignited if it takes long until plasma is ignited.

[0024] According to the technology described in Patent Literatures 2 and 3, the power supply is stopped. The technology described in Patent Literature 2 controls forward wave power so that the reflected wave power value becomes equal to or lower than 10%-20% of the rated output. The technology described in Patent Literature 3 controls power shutdown based on the output of the charge/discharge circuit. These technologies cannot maintain the supply of RF power while tolerating total reflected wave power, meaning that total reflected wave power tolerance cannot be realized.

[0025] Even if the RF generator and the plasma load match properly when the DC of the DC power supply is converted to RF AC via the switching operation in the RF generator and the forward wave power of RF power is supplied to the plasma load, the load impedance of the plasma load varies largely at plasma rise time. This variation in the load impedance generates reflected wave power that returns from the plasma load side to the generator side. The reflected wave power generated at plasma rise-time varies largely in a short time.

[0026] According to the power control described in Patent Literature 4 to Patent Literature 7, the power is controlled based on the instantaneous value of reflected wave power. Therefore, when reflected wave power rises rapidly at plasma rise time and its peak value exceeds the setting value, power reduction is started by power control. When the power supplied to the plasma load is limited by power control, the supplied power is limited before plasma is ignited with the result that plasma is not ignited successfully. Even if plasma is ignited successfully, the problem is that the reduced power supply makes it difficult to maintain plasma, meaning that normal plasma generation is difficult.

[0027] That is, the conventional power control reduces power based on an instantaneous value of reflected wave power. This may result in an incorrect determination that the peak of reflected wave power at plasma rise time is mistaken as an increase in reflected wave power caused by a plasma state change that will exist for a long time. If the power is turned off or reduced based on this incorrect determination, it becomes difficult to ignite or maintain plasma.

[0028] Therefore, in an RF generator that supplies RF power to a plasma load through the pulse operation, it is an object of the present invention, in the non-ignition state before plasma is ignited, to solve the above-described conventional problems with total reflected wave power tolerance that is the ability to tolerate total reflected wave power generated when forward wave power all returns to the generator side as reflected wave power. More specifically, when a class-D RF generator supplies RF power to a plasma load through the pulse operation, an object of the present invention is to realize total reflected wave power tolerance that is the ability to tolerate total reflected wave power generated when forward wave power all returns to the generator side as reflected wave power in the non-ignition state before plasma is ignited, to prevent an RF power amplifier device from being damaged by all reflected wave power during the pulse operation and, at the same time, to continue the plasma ignition operation by continuously supplying power without shutting down the supply of RF power in order to increase the plasma ignition performance during the pulse operation time.

Solution to Problem

[0029] In an RF power supply for supplying RF power to a plasma load, the present invention relates to reflected wave power control in which the reflected wave power of an RF generator is detected and, using the detected reflected wave power, the RF generator is controlled. For a short-time variation in reflected wave power, reflected wave power is controlled based on a variation in the peak value of the detection value of reflected wave power. For a long-time variation in reflected wave power, reflected wave power is controlled based on a variation in a smoothed value obtained by smoothing detection values of reflected wave power.

[0030] According to the present invention, a reflected wave power control loop system includes a reflected wave power peak value dropping loop system and an arc blocking system that perform control based on a peak variation in reflected wave power and a reflected wave power amount dropping loop system that performs control based on a smoothed power amount of reflected wave power.

[0031] The reflected wave power peak value dropping loop system of the present invention controls the DC voltage of the DC power supply of the RF generator unit based on the peak value of reflected wave power and, through the voltage control of the DC power supply, performs dropping control of the peak value of reflected wave power. The reflected wave power peak value dropping loop system is a control system that drops (reduces) the peak value of reflected wave power when

the peak value of reflected wave power exceeds a setting value (reflected wave power peak limit value). This system drops (reduces) the amplitude of the peak value of reflected wave power to prevent the RF power amplifier device from being destroyed due to an overload or a surge voltage.

[0032] The reflected wave power peak value dropping loop system is configured to control the DC voltage of the DC power supply of the RF generator unit. The system feeds back the peak value of reflected wave power to this DC power supply to cause it to drop the DC voltage, thus speedily dropping the peak value of reflected wave power.

[0033] The arc blocking system of the present invention controls whether to output from the RF amplifier unit of the RF generator unit based on the peak value of reflected wave power and thereby controls whether to supply power to the plasma load to control the blocking of an arc at the plasma load. The arc blocking system is a control system that stops the power supply when the peak value of reflected wave power exceeds the setting value (arc limit value). When the ignition fails and a high reflected wave power is generated that exceeds the arc blocking level at which that an arc at the plasma load is blocked, the arc blocking system stops the power supply to extinguish an arc in the plasma load. It is also possible to configure the system in such way that, when an arc is blocked, the ignition retry function, which performs the re-ignition operation after a predetermined time, is activated to ignite plasma again.

[0034] The reflected wave power peak value dropping loop system and the arc blocking system of the present invention perform the control to drop the peak value of reflected wave power or perform control to stop the power supply when the peak value of reflected wave power exceeds the setting value that is set in each control system.

[0035] At least one of the reflected wave power peak value dropping loop system and the arc blocking system of the present invention may include a sharp variation removing unit that removes a sharp variation from the detection value of reflected wave power. The sharp variation removing unit removes a sharp variation amount, generated by a sharp variation, from the detection value of reflected wave power, and feeds back a signal corresponding to the peak value of reflected wave power not generated by the sharp variation and existing longer than the sharp variation. The use of the peak value, from which a sharp variation amount is removed, prevents an incorrect determination that could be generated by the feedback control based on a peak value caused by a sharp variation generated at a plasma rise time. The sharp variation removing unit may be configured by a first-order lag circuit such as a low pass filter.

[0036] The reflected wave power amount dropping loop system of the present invention controls the amplification of the RF amplifier unit of the RF generator unit, based on the smoothed power amount of reflected wave power, to control the amount of power to be supplied to the plasma load for controlling whether to drop the smoothed power amount of reflected wave power. The reflected wave power amount dropping loop system is a control system that drops (reduces) the power amount of reflected wave power when the smoothed value, such as the average value or the effective value of the power amount of reflected wave power, exceeds the setting value (reflected wave power smoothed limit value). This system drops (reduces) the power amount of reflected wave power with the amplitude of the output voltage maintained, thus preventing thermal damage to the RF power amplifier device.

[0037] The control systems of the present invention, including the reflected wave power peak value dropping loop system, arc blocking system, and reflected wave power amount dropping loop system, can be each controlled independently. The setting values used for the control systems are the reflected wave power peak limit value, arc limit value, and reflected wave power smoothed limit value. The largest value is the arc limit value, the next largest value is the reflected wave power peak limit value, and the smallest value is the reflected wave power smoothed limit value.

[0038] The reflected wave power peak limit value is an index of effect on the RF amplifier device caused by an increase in the peak value of reflected wave power such as an overload or a surge voltage. When the peak value of reflected wave power exceeds this setting value, the reflected wave power peak value dropping loop system drops the peak value of reflected wave power and performs control so that the peak value of reflected wave power does not become equal to or larger than the setting value. The control based on this limit value protects the destruction of the RF power amplifier device from an overload or a surge voltage when reflected wave power is generated.

[0039] The arc limit value, which is a threshold for detecting an increase in reflected wave power generated by a failure in the ignition of the plasma load, is set as an arc blocking level. When the peak value of reflected wave power exceeds the arc blocking level, the arc blocking system determines that the ignition has failed and starts the arc blocking operation.

[0040] The reflected wave power smoothed limit value is a setting value used as an index of thermal effect on the RF power amplifier device caused by an increase in the power amount of reflected wave power. When the average value or the effective value of reflected wave power exceeds this setting value, the reflected wave power amount dropping loop system controls the duty ratio of the pulse control signal to control a drop (reduction) in the power amount of reflected wave power for preventing thermal damage to the RF power amplifier device. In the dropping control of the duty ratio, the reflected wave power amount dropping loop system reduces the ratio of the ON state in the time ratio between the ON state and the OFF state of the pulse control signal to reduce reflected wave power.

[0041] The reflected wave power control system of the present invention uses the reflected wave power peak value dropping loop system, arc blocking system, and reflected wave power amount dropping loop system described above to provide total reflected wave power tolerance, which is the ability to tolerate total reflected wave power generated when forward wave power all returns to the generator side as reflected wave power, in the non-ignition state before the plasma is ignited. Total reflected wave power tolerance, provided in this manner, prevents the RF power amplifier device from being damaged by total reflected wave power and, until reflected wave power generated due to an ignition failure becomes so high that the power supply must be stopped, continues supplying power without stopping the supply of RF power for continued plasma ignition operation, thus increasing the plasma ignition performance during the pulse operation.

[0042] One aspect of the present invention is an RF power supplying device and another aspect is a reflected wave power control method.

[0043] [Aspect of RF Power Supplying Device]

[0044] An RF power supplying device of the present invention, which is an RF power supplying device that supplies RF power to a plasma load, includes an RF generator unit that converts DC of a DC power supply to RF AC through a switching operation and outputs RF power; and a plurality of feedback systems that feeds back a detection value of the RF output of the RF generator unit for performing feedback control. The feedback system includes a forward wave power control loop system that feeds back a detection value of forward wave power, which is sent from the RF generator unit to a plasma load, for controlling the forward wave power; and a plurality of reflected wave power control loop systems each of which feeds back a detection value of reflected wave power, which is sent from the plasma load to the RF generator unit, for controlling the reflected wave power.

[0045] The arc blocking system does not form a control loop but, after performing the blocking processing to stop forward wave power, performs the plasma ignition operation through the re-ignition operation. Considering that this operation forms one type of loop, the arc blocking system is included in the reflected wave power control loop system in the description below.

[0046] In the feedback system of the reflected wave power control loop system, if a peak value generated at plasma rise time is determined incorrectly as a rise in reflected wave power caused by an abnormal condition of the plasma load, the feedback control will result in an incorrect operation.

[0047] To reduce this incorrect operation caused by a peak value, the reflected wave power peak value dropping loop system and the arc blocking system of the present invention include a sharp variation removing unit that removes a sharp variation from the detection value of reflected wave power detected at the output end of the RF generator unit.

[0048] The sharp variation removing unit, which may be configured by a first-order lag circuit, removes a sharp variation, included in the detection value, by causing a first-order lag in the detection value of reflected wave power. By causing a first-order lag in the detection value of reflected wave power, the first-order lag circuit can reduce a sharp variation included in reflected wave power generated at plasma rise time, prevent an incorrect determination caused by a variation that is not related to the plasma load and generated at plasma rise time, and thus prevent an incorrect operation that reduces the supply of RF power.

[0049] The sharp variation removing unit may be configured not only as a first-order lag circuit but also as a unit that detects a time at which the detection value of reflected wave power varies sharply and removes the detection value at this time.

[0050] The reflected wave power amount dropping loop system provided in the reflected wave power control loop system of the present invention, configured to calculate the smoothed value of reflected wave power, includes a power smoothing unit that outputs the average value or the effective value of the detection values of reflected wave power. As the criterion for determining whether the power amount of RF power is to be dropped and as the reflected wave power smoothed limit value that determines the drop amount used in the dropping control, the reflected wave power average limit value or the reflected wave power effective limit value is provided. The reflected wave power amount dropping loop system calculates the amount of error between the smoothed value, obtained by the power smoothing unit, and the reflected wave power smoothed limit value (reflected wave power average limit value or reflected wave power effective limit value) and, based on the calculated amount of error, performs the dropping control for the reflected wave power amount.

[0051] The following describes the reflected wave power peak value dropping loop system, arc blocking system, and reflected wave power amount dropping loop system.

[0052] (Reflected Wave Power Peak Value Dropping Loop System)

[0053] The reflected wave power control loop system of the present invention includes the reflected wave power peak value dropping loop system that drops (reduces) the peak value of reflected wave power. The reflected wave power peak value dropping loop system has a reflected wave power peak limit value as the threshold for determining whether the reflected wave power peak value is to be dropped.

[0054] The reflected wave power peak value dropping loop system of the present invention feeds back the difference between the peak value of reflected wave power and the reflected wave power peak limit value to the forward wave power control loop system as the feedback signal. Based on the feedback signal fed back from the reflected wave power peak value dropping loop system, the forward wave power control loop system controls the pulse width of the PWM signal, which drives the DC/DC converter provided in the RF generator unit, to control the output voltage.

[0055] The detection value of reflected wave power may include a peak generated by a sharp variation at the time plasma rises. This peak is not caused by a plasma abnormality. Therefore, if the reflected wave power peak value is dropped based on this peak value when the plasma state is normal, an incorrect control operation would be performed on the assumption that a plasma abnormality has occurred.

[0056] To avoid such an incorrect determination, the sharp variation removing unit is provided. The sharp variation removing unit outputs a signal, generated by removing a sharp variation included in the detection value of reflected wave power, as the peak value of reflected wave power. By feeding back the difference between the peak value, from which a sharp variation is removed, and the reflected wave power peak limit value to the forward wave power control loop system as the feedback signal, an incorrect operation due to a sharp variation can be avoided.

[0057] (Arc Blocking System)

[0058] The reflected wave power control loop system of the present invention includes an arc blocking system that prevents damage caused by excessive reflected wave power. When the ignition fails and an excessive amount of reflected wave power is generated, the arc blocking system stops the supply of power to the plasma load to block an arc in the plasma load. The arc blocking system has an arc limit value as the threshold for determining whether the output of RF power is to be stopped.

[0059] Based on the comparison between the peak value of reflected wave power and the arc limit value, the arc blocking system of the present invention controls the pulse control signal, which generates the RF gate signal for driving the RF amplifier unit provided in the RF generator unit, to control whether to output RF power from the RF amplifier unit. The RF amplifier unit converts a DC voltage to AC RF power, for

example, via a full-bridge inverter. When converting from DC to AC, the RF amplifier unit performs amplification/conversion in synchronization with the RF gate signal that switches the switch device of the inverter. By controlling the pulse control signal that generates the RF gate signal to be sent to the RF amplifier unit, the arc blocking system can control the output of RF power.

[0060] In the arc blocking system, too, a peak included in the detection value of reflected wave power and generated by a sharp variation at plasma arise time is sometimes determined incorrectly as a plasma abnormality. To avoid such an incorrect determination, the sharp variation removing unit may be provided. Based on the comparison between the peak value of reflected wave power, from which a sharp variation is removed by the sharp variation removing unit, and the arc limit value, the arc blocking system performs the blocking control, thus avoiding an incorrect operation that may be caused by a sharp variation.

[0061] The reflected wave power peak value dropping loop system and the arc blocking system use the sharp variation removing unit to remove a variation from reflected wave power. This prevents a peak value, generated when plasma rises, from being determined incorrectly as a plasma abnormality.

[0062] (Reflected Wave Power Amount Dropping Loop System)

[0063] The reflected wave power control loop system of the present invention includes the reflected wave power amount dropping loop system that drops (reduces) the power amount of reflected wave power.

[0064] The reflected wave power amount dropping loop system of the present invention determines the duty ratio of the pulse control signal, which determines the time ratio between the ON state and the OFF state of the RF gate signal of the RF amplifier unit provided in the RF generator unit, based on the comparison between the smoothed power amount obtained by the power smoothing unit and the reflected wave power smoothed limit value, thereby controlling a drop (reduction) in the power amount of RF power of the RF amplifier unit. The power smoothing unit may be an average value circuit that calculates the average value of power or an effective value circuit that calculates the effective value of power. The reflected wave power amount dropping loop system controls a drop (reduction) in the power amount of RF power of the RF amplifier unit based on the comparison between the average value of power and the reflected wave power average limit value or based on the comparison between the effective value of power and the reflected wave power effective limit value.

[0065] The average value dropping operation or the effective value dropping operation performed by the reflected wave power amount dropping loop system reduces the duty ratio of the pulse control signal that determines the time ratio between the ON state and the OFF state of the RF gate signal. By doing so, the reflected wave power amount dropping loop system reduces the amount of reflected wave power without reducing the amplitude of the RF voltage of the RF amplifier unit and therefore reduces a heat loss in the RF power amplifier device to prevent destruction. Because the amplitude of the RF voltage of the RF amplifier unit is not reduced, the high ignition voltage can be maintained.

[0066] (Configuration of RF Power Supplying Device)

[0067] FIG. **1** is a diagram showing the general configuration of the RF power supplying device of the present invention. In FIG. **1**, an RF power supplying device **1** includes an RF generator unit **10** that converts the DC voltage of a DC power supply via a DC/DC converter **12**, converts/amplifies DC to AC via an RF amplifier unit **13**, and supplies the converted and amplified RF power to a load **103** such as a plasma load.

[0068] The RF generator unit **10** includes a forward wave power control loop system **20** that performs feedback control based on the forward wave power feedback value PF detected by an RF sensor **16** at the output end and a reflected wave power control loop system **100** (**30**, **40**, **50**) that performs feedback control based on the reflected wave power feedback value PR detected by the RF sensor **16** at the output end. The reflected wave power control loop system **100** includes the reflected wave power peak value dropping loop system **30**, arc blocking system **40**, and reflected wave power amount dropping loop system **50**.

[0069] The reflected wave power peak value dropping loop system **30** performs control to drop (reduce) the peak value of reflected wave power, the arc blocking system **40** performs control to block an arc in the plasma load, and the reflected wave power amount dropping loop system **50** performs control to drop (reduce) the power amount of reflected wave power.

[0070] The reflected wave power peak value dropping loop system **30** and the arc blocking system **40** of the reflected wave power control loop system **100** perform control based on the signal of a peak value obtained by removing a sharp variation from the detected reflected wave power feedback value PR via a sharp variation removing unit **31**. The reflected wave power amount dropping loop system **50** of the reflected wave power control loop system **100** performs control based on the smoothed power amount calculated by smoothing the detected reflected wave power feedback value PR via a power smoothing unit **51**.

[0071] The sharp variation removing unit **31** removes a sharp variation, which is the peak value generated when plasma rises, from the reflected wave power feedback value PR to prevent the sharp variation from being determined incorrectly as a plasma abnormality. The output of the sharp variation removing unit **31** is used in the control performed by the reflected wave power peak value dropping loop system **30** and the arc blocking system **40**. The sharp variation removing unit **31** may be a first-order lag circuit configured by an LPF (low pass filter).

[0072] The power smoothing unit **51** outputs a value corresponding to the power value that is a smoothed value calculated as the average value or effective value of the reflected wave power feedback values PR. The reflected wave power amount dropping loop system **50** calculates the duty ratio of the pulse control signal used to control the RF amplifier unit based on the output of the power smoothing unit **51**.

[0073] [Reflected Wave Power Control Method]

[0074] The reflected wave power control method of the present invention for use in an RF power supply, which supplies RF power to a plasma load, configures a feedback system that performs feedback control by feeding back the detection value of the output of the RF generator unit that converts the DC of a DC power supply to RF AC through the switching operation. In this feedback system, the detection value of forward wave power is fed back to a forward wave power control loop system and the detection value of reflected wave power is fed back to a reflected wave power control loop system **100** that includes a plurality of loop systems.

[0075] A reflected wave power peak value dropping loop system and an arc blocking system of the reflected wave power control loop system **100** control the output voltage to drop the peak value of reflected wave power or to block an arc. In the dropping control or the blocking control, a sharp variation removing unit removes a sharp variation, included in the detection value of reflected wave power, to prevent a peak value, generated at plasma rise time, from being determined as a plasma abnormality, thus preventing the dropping or the blocking from being performed incorrectly.

[0076] A reflected wave power amount dropping loop system of the reflected wave power control loop system **100** smoothes the detection values of reflected wave power via a power smoothing unit and feeds back a signal, corresponding to the smoothed power amount, to drop the power amount of reflected wave power.

[0077] (Reflected Wave Power Peak Value Dropping Control)

[0078] The reflected wave power control loop system includes a reflected wave power peak value dropping loop system. The reflected wave power peak value dropping loop system has a reflected wave power peak limit value as the threshold for determining whether the reflected wave power peak value is to be dropped. The reflected wave power peak value dropping loop system feeds back the difference between the detection value of reflected wave power and the reflected wave power peak limit value to the forward wave power control loop system to control the pulse width of the PWM signal, which drives the DC/DC converter provided in the RF generator unit, thus controlling the output voltage.

[0079] (Arc Blocking Control)

[0080] The reflected wave power control loop system includes an arc blocking system. The arc blocking system has an arc limit value as the threshold for determining whether RF power is to be output. The arc blocking system controls the RF gate signal of the RF amplifier unit provided in the RF generator unit based on the comparison between the detection value of reflected wave power and the arc limit value, thus controlling the blocking of the output of RF power of the RF amplifier unit.

[0081] In the reflected wave power peak value dropping control and the arc blocking control, the detection value of reflected wave power is sent to the sharp variation removing unit, which removes a sharp variation, included in the detection value and generated at plasma rise time, and prevents an incorrect operation.

[0082] (Reflected Wave Power Amount Dropping Control)

[0083] The reflected wave power control loop system includes a reflected wave power amount dropping loop system. Based on the comparison between the smoothed value, obtained by smoothing the detection values of reflected wave power, and the reflected wave power smoothed limit value that determines whether to drop the power amount of RF power as well as the dropping amount, the reflected wave power amount dropping loop system determines the duty ratio of the pulse control signal, which determines the time ratio between the ON state and the OFF state of the RF gate signal of the RF amplifier unit provided in the RF generator unit, thereby performing the dropping control of the power amount of RF power output from the RF amplifier unit. The smoothed value is the average value or the effective value of the detection values of reflected wave power. As the reflected wave power smoothed limit value, the reflected wave power amount dropping loop system has the reflected wave power average limit value or the reflected wave power effective limit value.

[0084] FIG. **2** is a diagram showing the outline of power control performed in the present invention. The reflected wave power control of the RF power supply of the present invention uses the RF sensor **16**, provided at the output end of the RF generator unit **10**, to detect reflected wave power sent from the load side to the RF generator side (S**1**).

[0085] A sharp variation is removed from the detection value of the detected reflected wave power (S**2**) and, based on the peak value of the obtained reflected wave power, the reflected wave power peak value dropping control (S**3**) and the arc blocking control (S**4**) are performed. A sharp variation can be removed by causing a first-order delay in the detection value of reflected wave power.

[0086] The reflected wave power peak value dropping control (S**3**) uses the PWM control signal, which is based on the peak value of reflected wave power, to drive the DC/DC converter **12** of the RF generator unit **10** for controlling the output voltage. The arc blocking control (S**4**) determines if plasma is ignited based on the peak value of reflected wave power and, when a high reflected wave power is generated due to an ignition failure (S**7**), stops the RF gate signal and stops the output from the RF amplifier unit to stop the forward wave power (S**8**). After stopping the forward wave power, the arc blocking control performs the re-ignition operation to perform the plasma ignition operation repeatedly (S**9**).

[0087] The re-ignition operation can be performed by the ignition retry function, which tries to ignite plasma, after a predetermined stop time elapses after the ignition is determined to fail. This retry function allows the user to specify the number of retries to repeat the ignition operation and the time width of the stop time. It is also possible to setup the retry function so that the retry operation is stopped if plasma cannot be ignited within the specified number of retries or to resume the retry operation after stopping the operation for a specified time.

[0088] The smoothed value of the detection values of reflected wave power can be calculated as the average value or the effective value (S**5**). The reflected wave power amount dropping control is performed based on the calculated smoothed value. The reflected wave power amount dropping control sets the duty ratio of the pulse control signal based on the smoothed value of reflected wave power and performs dropping control for the RF amplifier unit based on this duty ratio (S**6**).

[0089] The reflected wave power peak value dropping control (S**3**), arc blocking control (S**4**), and reflected wave power amount dropping control (S**6**), each of which has an individual threshold for starting the control, can perform the control operation independently of each other.

[0090] On the other hand, the forward wave power control of the RF power supply of the present invention uses the RF sensor **16** to detect forward wave power sent from the RF generator side to the load side (S**101**). The forward wave power control uses the PWM control signal, which is based on the detected amount of forward wave power, to drive the DC/DC converter **12** of the RF generator unit **10** for controlling the output voltage (S**102**).

[0091] FIG. **3** is a diagram showing the relation among the reflected wave power feedback, limit values, and arc blocking level.

[0092] FIG. **3**A shows the forward wave power feedback value PF. In FIG. **3**B, the first-order lag output of reflected wave power **202** indicates the output obtained by causing a first-order lag in the reflected wave power feedback value PR, and the smoothed value **203** indicates the average value or effective value of the reflected wave power feedback values PR. FIG. **3**B also shows the limit values (reflected wave power smoothed limit value **301**, reflected wave power peak limit value **302**) and the arc limit value **303** that is the arc blocking level. Although a forward wave power feedback value **200** and a reflected wave power feedback value **201** are each indicated by an envelope curve in FIG. **3**, the output of the RF sensor **16** may be not only a DC voltage output but also an RF AC voltage output.

[0093] The first-order lag output of reflected wave power **202** may be obtained by causing a first-order lag in the reflected wave power feedback value PR to produce a signal from which a sharp variation, which occurs sharply at plasma rise time, is reduced. This first-order lag output of reflected wave power **202** is compared with the reflected wave power peak limit value **302**. As a result, if the first-order lag output of reflected wave power **202** reaches the reflected wave power peak limit value **302**, the reflected wave power peak value dropping control is performed to reduce the peak value of reflected wave power.

[0094] In addition, if the first-order lag output of reflected wave power **202** further increases to the arc limit value **303** that is the arc blocking level, the ignition of plasma is determined to fail and the arc blocking control is performed. The arc blocking control stops power to be supplied to the plasma load to block an arc at the plasma load.

[0095] If the smoothed value (average value or effective value) **203** reaches the reflected wave power smoothed limit value (reflected wave power average limit value or reflected wave power effective limit value) **301**, the reflected wave power amount dropping operation is performed to limit the output power amount without reducing the amplitude of the output voltage of the RF generator unit. Limiting the output power in this manner reduces a heat loss in the RF power amplifier device.

[0096] The forward wave power feedback value and the reflected wave power feedback value in FIG. **3**, which are schematic examples shown for the sake of description, do not show actual examples. Nor do the limit value and the arc blocking level show actual examples.

Advantageous Effects of Invention

[0097] As described above, in an RF generator that supplies RF power to a plasma load through the pulse operation, the present invention realizes total reflected wave power tolerance, which is the ability to tolerate total reflected wave power generated when forward wave power all returns to the generator side as reflected wave power, in the non-ignition state before plasma is ignited.

[0098] In addition, the present invention prevents an incorrect determination caused by the peak of reflected wave power at plasma rise time and, at the same time, performs power control based on a variation in reflected wave power caused by a longer-period variation in the plasma state of the plasma load. This power control prevents an RF power amplifier device from being damaged by all reflected wave power and, at the same time, continues the supply of RF power without shutdown to ignite a plasma and maintains the plasma state.

BRIEF DESCRIPTION OF THE DRAWINGS

[0099] FIG. **1** is a diagram showing the general configuration of an RF power supplying device of the present invention.

[0100] FIG. **2** is a diagram showing the outline of a reflected wave power control method of the present invention.

[0101] FIG. **3** is a diagram showing the relation among a reflected wave power feedback value, limit values, and an arc blocking level.

[0102] FIG. **4** is a diagram showing an example of the configuration of the RF power supplying device of the present invention.

[0103] FIG. **5** is a diagram showing an example of the operation of an RF amplifier unit.

[0104] FIG. **6** is a diagram showing an example of the operation of the RF amplifier unit.

[0105] FIG. **7** is a diagram showing a part of the circuit configuration of the RF power supplying device of the present invention.

[0106] FIG. **8** is a diagram showing a part of the circuit configuration of the RF power supplying device of the present invention.

[0107] FIG. **9** is a diagram showing the operation of a forward wave power control loop system of the RF power supplying device of the present invention.

[0108] FIG. **10** is a diagram showing the operation of a reflected wave power peak value dropping loop system of the RF power supplying device of the present invention.

[0109] FIG. **11** is a flowchart showing the operation of the reflected wave power peak value dropping loop system of the RF power supplying device of the present invention.

[0110] FIG. **12** is a diagram showing the forward wave power control and the reflected wave power peak value dropping operation.

[0111] FIG. **13** is a diagram schematically showing the reflected wave power peak value dropping operations when plasma ignition succeeded and failed.

[0112] FIG. **14** is a diagram showing the operation of an arc blocking system of the present invention.

[0113] FIG. **15** is a flowchart showing the operation of the arc blocking system of the present invention.

[0114] FIG. **16** is a diagram schematically showing the arc blocking operations when plasma ignition succeeded and failed.

[0115] FIG. **17** is a diagram schematically showing the operation of the reflected wave power amount dropping loop system of the present invention.

[0116] FIG. **18** is a flowchart showing the reflected wave power amount dropping loop system of the present invention.

[0117] FIG. **19** is a diagram showing the forward wave power control and the reflected wave power amount dropping operation.

[0118] FIG. **20** is a diagram showing the reflected wave power amount dropping operation of the present invention.

DESCRIPTION OF EMBODIMENT

[0119] Embodiments of the present invention are described below in detail with reference to the drawings. The following describes an RF power supplying device and a reflected wave power control method of present invention. An example of the configuration of the RF power supplying device is described with reference to FIG. **4**, an example of the operation of an RF amplifier unit is described with reference to FIGS. **5** and **6**, and a part of the circuit configuration of the RF power sup-

plying device is described with reference to FIGS. **7** and **8**. The operation of a forward wave power control loop system of the RF power supplying device is described with reference to FIG. **9**, the operation of a reflected wave power peak value dropping loop system of the RF power supplying device is described with reference to FIG. **10** to FIG. **13**, the operation of an arc blocking system of the RF power supplying device is described with reference to FIG. **14** to FIG. **16**, and the operation of a reflected wave power amount dropping loop system of the RF power supplying device is described with reference to FIG. **17** to FIG. **20**.

[Example of the Configuration of RF Power Supplying Device]

[0120] First, an example of the configuration of an RF power supplying device of the present invention is described with reference to FIG. **4**.

[0121] Referring to FIG. **4**, an RF power supplying device **1** of the present invention includes an RF generator unit **10** that supplies RF power to a load **103**, and a generator output end **101** of the RF generator unit **10** and the load **103** are connected via a coaxial cable **102**. The coaxial cable **102** is exemplary only and is not always required in this configuration; instead of the coaxial cable **102**, power may be transmitted via any other transmission line.

[0122] Feedback control of the RF generator unit **10** is performed by the feedback systems including a forward wave power control loop system **20**, a reflected wave power amount dropping loop system **50**, a reflected wave power peak value dropping loop system **30**, and an arc blocking system **40**.

[0123] (RF Generator Unit)

[0124] The RF generator unit **10** includes a DC power supply **11**, a DC/DC converter **12**, RF amplifier units **13**, a synthesizer **14**, and a low-pass filter **15**, with an RF sensor **16** between the low-pass filter **15** and the generator output end **101**.

[0125] The DC power supply **11** is the input supply source of the DC/DC converter **12**. Instead of the DC power supply **11**, a DC voltage generated by rectifying and smoothing AC voltage may also be used.

[0126] The DC/DC converter **12** is a device that converts the voltage Edc of the DC power supply **11** to a variable DC voltage Vdc, and the converter may be configured by an inverter circuit or by a chopper circuit. The DC/DC converter **12** changes the conduction ratio of the semiconductor device according to the pulse width of the PWM signal, supplied from a drive circuit **25** of the forward wave power control loop system **20** and, thereby, makes variable the DC voltage Vdc of the output. The DC voltage Vdc of the output of the DC/DC converter **12** is sent to the RF amplifier unit **13**.

[0127] The RF amplifier unit **13**, a device that converts a DC voltage to an AC voltage, may be configured by a class-D RF amplifier circuit. The class-D RF amplifier circuit is an RF amplifier circuit that converts the DC of the DC power supply to an RF AC through the switching operation. This amplifier circuit causes the switching device in the output stage to perform ON/OFF operation based on the RF gate signal to increase and decrease the output current between 0 and the maximum value for performing the amplification operation via DC/AC conversion. A class-D RF amplifier circuit, with a small heat loss because of a small on-time resistance of the switching device, performs conversion efficiently.

[0128] The RF amplifier unit **13**, implemented by a class-D amplifier circuit, may be in a full-bridge inverter configuration. This amplifier unit converts the DC voltage Vdc, received from the DC/DC converter **12**, to an AC RF output power. The voltage amplitude of the RF output power of the RF amplifier unit **13** is proportional to the received DC voltage Vdc. The DC to AC amplification/conversion of the RF amplifier unit **13** is performed in synchronization with the RF gate signal supplied from a gate signal generator **18**.

[0129] FIG. **5** is a diagram showing an example of one configuration of the RF amplifier unit included in the RF generator. FIG. **6** is a diagram showing the RF gate signal that drives and controls the RF amplifier unit, the RF output, and forward wave power and reflected wave power detected at the plasma load.

[0130] In an RF amplifier unit **120** shown in FIG. **5**, MOSFETs **120***a*-**120***d* are in the bridge configuration, the connection point between series-connected MOSFET **120***a* and MOSFET **120***d* and the connection point between series-connected MOSFET **120***c* and MOSFET **120***d* are connected via a main transformer **120***e*, and the output of the main transformer **120***e*, obtained via a filter **120***f*, is the RF output. The MOSFETs **120***a*-**120***d* are driven and controlled by the RF gate signals A, A*, B, and B* (FIG. **5**A, FIG. **5**A).

[0131] The RF gate signals A and A* (in FIG. **5**, the symbol "-" is shown above the letter A to indicate an inverse signal), which are signals for driving and controlling the series circuit of the MOSFET **120***a* and the MOSFET **120***b*, are in reverse phase. The RF gate signals B and B* (in FIG. **5**, the symbol "-" is shown above the letter B to indicate an inverse signal), which are signals for driving and controlling the series circuit of the MOSFET **120***c* and the MOSFET **120***d*, are in inverse phase. The RF gate signal A and the RF gate signal Bare in inverse phase.

[0132] The RF gate signals A, A*, B, and B* (FIGS. **6**A, **6**B) are controlled by the pulse control signal (FIG. **6**C). The RF gate signals A, A*, B, and B* are output when the pulse control signal is on. During this period, the RF output (FIG. **6**D) is output.

[0133] FIGS. **6**E and **6**F show the forward wave power and the reflected wave power received at the plasma load. Referring to FIG. **6**F, the reflected wave power is generated transiently at the plasma load, on which the impedance matching box is installed, when the RF gate signal (FIGS. **6**A, **6**B) rises, and is attenuated after the stabilization time elapses (FIG. **6**F).

[0134] The parallel connection of a plurality of RF amplifier units gives larger RF output power. In the configuration in which a plurality of RF amplifier units are connected in parallel, the AC powers at the generator output end **101** of the RF generator unit **10** are placed in phase with each other by phase-synchronizing the amplification/conversion of the RF generator units.

[0135] The synthesizer **14** is a device that combines the RF output powers, output from the plurality of RF amplifier units **13**, into one. The synthesizer **14** may be omitted when one RF amplifier unit **13** is used.

[0136] The RF output power, output from the RF amplifier unit **13**, and the RF output power, combined into one and output by the synthesizer **14**, include many higher harmonic components. The low-pass filter **15** shapes the waveform of the RF output power, removes the higher harmonic components included in RF power, and sends RF output power, which includes fewer higher harmonic components, to the RF sensor **16**.

[0137] The RF sensor **16** separately detects two powers, forward wave power and reflected wave power, included in the RF output power, and outputs them as a forward wave power feedback value PF and a reflected wave power feedback value PR. The RF output power, which passed through the RF sensor **16**, is sent to the generator output end **101**. The generator output end **101** connects the coaxial cable **102** and the RF generator unit **10**. The generation of unwanted reflected wave power is prevented by matching the characteristic impedance of the generator output end **101** with the characteristic impedance of the coaxial cable **102**.

[0138] The coaxial cable **102** supplies the RF output power, received from the generator output end **101**, to the load **103**.

[0139] The load **103** can match the impedance, viewed from the RF generator side, with the characteristic impedance of the generator output end **101** and the characteristic impedance of the coaxial cable **102** via the matching box (impedance matching box). The characteristic impedance and the matching impedance are, for example, 50 [ohm].

[0140] (Configuration of Forward Wave Power Control Loop System)

[0141] The forward wave power control loop system **20** is a feedback system that feeds back the forward wave power feedback value PF, detected by the RF sensor **16**, to the DC/DC converter **12** so that the forward wave power of the RF generator unit **10** becomes equal to the forward wave power instruction value. The forward wave power control loop system **20** includes a hold circuit **22**, a forward wave power error amplifier device **23**, a PWM signal generation circuit **24**, and the drive circuit **25** that are connected in series in the direction from the RF sensor **16** to the DC/DC converter **12**.

[0142] A forward wave power instruction value **21** is a reference value, used during the forward wave power control, to control the magnitude of the forward wave power feedback value PF detected by the RF sensor **16**. During the forward wave power control, the PWM signal is generated that has a pulse width that makes the peak value of the forward wave power feedback value PF equal to the forward wave power instruction value **21**. This PWM signal is used to pulse-control the DC/DC converter **12**.

[0143] The forward wave power feedback value PF, which is output by the RF sensor **16**, includes the value of the Ton area and the value of the Toff area. The value of the Ton area represents the magnitude of the forward wave power. On the other hand, the value of the Toff area does not represents the magnitude of the forward wave power. The hold circuit **22** holds only the value of the Ton area of the forward wave power feedback value PF, not including the value of the Toff area, to obtain the magnitude of the forward wave power.

[0144] The hold circuit **22** turns on the switch according to the Ton area of the forward wave power feedback value PF, and turns off the switch and disconnects it according to the Toff area, to maintain the immediately preceding state, and holds the amplitude of the forward wave power feedback value. The hold circuit **22** sends the amplitude of the forward wave power feedback value PF, which is held, to the forward wave power error amplifier device **23**.

[0145] FIG. **7** is a circuit diagram showing an example of the configuration of the hold circuit **22**. In a circuit **60** shown in FIG. **7**A, a hold circuit **61**, configured by a switch circuit **65**, receives the forward wave power instruction value **21** and the forward wave power feedback value PF with a resistor **63** and a resistor **64** connected to the input end of the switch circuit **65**. The switch circuit **65**, which performs switching in synchronization with ON/OFF of the forward wave power feedback value PF, sends the forward wave power feedback value PF of the Ton area, as well as the forward wave power instruction value, to an error amplifier circuit **62** connected to the output end of the switch circuit **65**.

[0146] The error amplifier circuit **62**, configured by an operational amplifier **66**, amplifies the difference between the forward wave power feedback value PF and the forward wave power instruction value. The figure shows an example in which the error amplification function is configured by hardware of the error amplifier circuit **62** that includes the operational amplifier **66**. The function may be implemented not only by a hardware configuration but also by a software configuration in which the CPU runs a program to perform error amplification operation processing.

[0147] In a circuit **70** shown in FIG. **7**B, a hold circuit **71**, configured by a switch circuit **75** and a capacitor, receives the forward wave power feedback value PF via the input end of the switch circuit **75**. The switch circuit **75** performs switching in synchronization with ON/OFF of the forward wave power feedback value PF and holds the forward wave power feedback value PF of the Ton area in the capacitor.

[0148] The voltage value held in the capacitor, which is the forward wave power feedback value PF, is sent to the error amplifier circuit **72** via a buffer circuit **77** and a resistor **74**. The error amplifier circuit **72** receives the forward wave power instruction value **21** via a resistor **73**. An error amplifier circuit **72**, configured by an operational amplifier **76**, amplifies the difference between the forward wave power feedback value PF and the forward wave power instruction value.

[0149] The forward wave power error amplifier device **23** amplifies the error between the forward wave power instruction value and the forward wave power feedback value PF with a predefined gain and outputs the resulting value as the control amount.

[0150] The PWM signal generation circuit **24** generates the PWM signal according to the larger by comparison of the two control amounts of the forward wave power error amplifier device **23** or the reflected wave power peak value power error amplifier **34**.

[0151] The control amount output by the reflected wave power peak value power error amplifier **34** is the control amount by which reflected wave power peak value dropping control is performed. If the control value of the forward wave power error amplifier device **23** is larger than the control amount of the reflected wave power peak value power error amplifier **34**, forward wave power control is performed according to the control amount of the forward wave power error amplifier device **23**. Conversely, if the control amount of the reflected wave power peak value power error amplifier **34** is larger than the control amount of the forward wave power error amplifier device **23**, reflected wave power peak value dropping control is performed according to the control amount of the reflected wave power peak value power error amplifier **34** to drop and reduce an excessive peak value of the reflected wave power.

[0152] The drive circuit **25** generates the drive signal, which amplifies power high enough for the semiconductor device in the DC/DC converter **12** to be driven, based on the PWM signal generated by the PWM signal generation circuit **24**. Then, the drive circuit **25** sends the generated drive signal to the gate of the semiconductor device in the DC/DC converter **12** to cause the DC/DC converter **12** to perform the

switching operation for converting the DC voltage Edc of the DC power supply **11** to the output voltage Vdc. In addition, the drive circuit **25** insulates between the reference potentials of the PWM signal generation circuit **24** and the reference potential of the DC/DC converter **12** and, if the potential of the PWM signal and the potential of the DC/DC converter **12** differ, prevents damage to, or a malfunction of, the PWM signal generation circuit **24** caused by a current from the DC/DC converter **12** to the PWM signal generation circuit **24**.

[0153] (Configuration of Reflected Wave Power Peak Value Dropping Loop System)

[0154] The reflected wave power peak value dropping loop system **30** is a feedback system that drops the peak value of reflected wave power of the RF generator unit **10** by feeding back the reflected wave power feedback value PR, detected by the RF sensor **16**, to the DC/DC converter **12** via the forward wave power control loop system **20**. The reflected wave power peak value dropping loop system includes a sharp variation removing unit **31**, a reflected wave power peak limit value **32**, a hold circuit **33**, and the reflected wave power peak value power error amplifier **34**. The reflected wave power peak value dropping loop system **30** sends the output of the reflected wave power peak value power error amplifier **34** to the PWM signal generation circuit **24** of the forward wave power control loop system **20** for controlling the pulse width of the PWM signal that drives the DC/DC converter **12**, thus dropping and reducing the peak value of the reflected wave power.

[0155] The sharp variation removing unit **31** is a circuit that removes a sharp variation generated at plasma rise time. In the plasma load, peak-like reflected wave power is generated inevitably at plasma rise time even when plasma is ignited successfully. If the reflected wave power generated at plasma rise time reaches the setting value (reflected wave power peak limit value), this rise in the reflected wave power is sometimes determined mistakenly as a rise in reflected wave power caused due to an abnormality in the plasma load. The dropping control of the reflected wave power peak, if performed based on this incorrect determination, could generate a problem that the ignited plasma will become unstable.

[0156] The sharp variation removing unit **31** removes a sharp variation included in the detected reflected wave power feedback value PR and prevents incorrect determination that may be caused due to reflected wave power generated at plasma rise time. The sharp variation removing unit **31** may be configured by a first-order lag circuit composed of a resistor and a capacitor.

[0157] FIG. **8** is a diagram showing an example of the configuration of the sharp variation removing unit **31**. FIG. **8**A shows an example of the circuit in which the sharp variation removing unit **31** is configured by a first-order lag circuit **80**. This circuit may be configured by a low pass filter (LPF) composed of a resistor **81** and a capacitor **82**.

[0158] FIG. **8**B shows another example of the configuration of the sharp variation removing unit **31**. The sharp variation removing unit **31** may be configured by a filter circuit **90** that removes RF components. A switching circuit **95** switches the output of the detection signal of reflected wave power and outputs only the signal from which a sharp variation, included in the detection signal, is removed. A sharp variation is detected by a differentiation circuit **91**, a comparator circuit **92**, and a limit value **93**. A variation in the detection signal is detected by the differentiation circuit **91**, and the detected differentiation value and the limit value **93** are compared to detect a sharp variation. The switching circuit **95** places a sharp variation in the OFF state based on the output of the comparator circuit **92** and stops the output of the detection signal; on the other hand, the switching circuit **95** places a signal, which does not include a sharp variation, in the ON state and outputs the detection signal. A delay circuit **94** delays the detection signal for the time, required for the processing of the differentiation circuit **91** and the comparator circuit **92**, to adjust the time of switching performed by the switching circuit **95**.

[0159] In FIG. **4**, the reflected wave power peak limit value **32** is a reference value with which the output of the sharp variation removing unit **31** is compared when the reflected wave power peak value dropping operation is performed. This value is a pre-set value. During the reflected wave power peak value dropping operation, the peak value of the reflected wave power feedback is limited to a value equal to or smaller than the reflected wave power peak limit value **32**.

[0160] The hold circuit **33** may have a configuration similar to that of the hold circuit **22** provided in the forward wave power control loop system **20**. The hold circuit **33** turns on the switch according to the Ton area of the reflected wave power feedback value PR, and turns off and disconnects the switch according to the Toff area, to maintain the immediately preceding state and holds the amplitude of the reflected wave power feedback value. The hold circuit **33** sends the amplitude of the reflected wave power feedback value PR, which is held, to the reflected wave power peak value power error amplifier **34**.

[0161] The reflected wave power peak value power error amplifier **34** amplifies the difference between the reflected wave power peak limit value **32** and the output of the sharp variation removing unit **31** with a pre-set gain and outputs the resulting value as the control amount.

[0162] The control amount output by the reflected wave power peak value power error amplifier **34** is the control amount by which the reflected wave power peak value dropping control is performed. The PWM signal generation circuit **24** receives the output of the reflected wave power peak value power error amplifier **34** and the output of the forward wave power error amplifier device **23**. If the control amount of the reflected wave power peak value power error amplifier **34** is larger than the control amount of the forward wave power error amplifier device **23**, reflected wave power peak value dropping control is performed according to the control amount of the reflected wave power peak value power error amplifier **34** to drop an excessive peak value of the reflected wave power.

[0163] (Configuration of Arc Blocking System)

[0164] The arc blocking system **40** is a feedback system that feeds back the reflected wave power feedback value PR, detected by the RF sensor **16**, to the RF amplifier unit **13** to control the blocking of an arc by stopping power supplied to the plasma load. The arc blocking system **40** includes the sharp variation removing unit **31**, provided in the reflected wave power peak value dropping loop system **30**, as well as an arc limit value **41**, a comparator **42**, and a gate turn-off signal generator **43**, and sends the output of the gate turn-off signal generator **43** to the gate signal generator **18**. By doing so, the arc blocking system **40** controls the duty ratio of the pulse control signal, which controls ON/OFF of the RF gate signal that drives the RF amplifier unit **13**, in order to block an arc.

[0165] In addition to the configuration in which the sharp variation removing unit **31** provided in the reflected wave

power peak value dropping loop system **30** is used also in the arc blocking system **40**, other configurations are also possible. For example, the sharp variation removing unit **31** may be provided separately in the arc blocking system **40**. A still another configuration is that the sharp variation removing unit is provided independently of the reflected wave power peak value dropping loop system **30** and the arc blocking system **40**; in this case, the detection value of the reflected wave power, from which a sharp variation is removed, is sent to both feedback systems, that is, to the reflected wave power peak value dropping loop system **30** and the arc blocking system **40**.

[0166] The arc limit value **41** is a level value used to determine whether plasma load ignition succeeded or failed. Whether plasma load ignition succeeded or failed is determined by determining whether the detection value, generated by removing a sharp variation from the reflected wave power feedback value PR, has reached the arc limit value **41**. The reflected wave power feedback value PR increases when the plasma load ignition failed. Therefore, if the output of the sharp variation removing unit **31** has reached the arc limit value **41**, it is detected that plasma load ignition failed.

[0167] The comparator **42** is a comparator that compares the arc limit value **41** and the output of the sharp variation removing unit **31** to determine the ignition state of the plasma load. The comparator **42** determines that the ignition succeeded if the output of the sharp variation removing unit **31** is equal to or smaller than the arc limit value **41**; conversely, the comparator **42** determines that the ignition failed if the output of the sharp variation removing unit **31** exceeds the arc limit value **41**.

[0168] The gate turn-off signal generator **43** sends the gate turn-off signal to the gate signal generator **18** according to the ignition determination signal output by the comparator **42**. When ignition succeeded, the gate turn-off signal generator **43** does not send the gate turn-off signal but permits the gate signal generator **18** to output the RF gate signal. When ignition failed, the gate turn-off signal generator **43** sends the gate turn-off signal to inhibit the gate signal generator **18** from outputting the RF gate signal.

[0169] The gate signal generator **18** is a circuit that supplies the RF gate signal that controls RF gate power required to drive the RF power amplifier device in the RF amplifier unit **13**. The gate signal generator **18** applies the generated RF gate signal to the bridge-configured MOSFETs **120** in the RF amplifier unit **13** shown in FIG. **5** to alternately switch the MOSFETs **120** between on and off for generating an RF output.

[0170] The pulse control signal is the control signal used to control the output of the RF gate signal. When in the ON state, the pulse control signal causes the gate signal generator **18** to output the RF gate signal and, when in the OFF state, causes the gate signal generator **18** to stop the RF gate signal. Controlling the duty ratio, which is determined by the time width ratio between the ON state and the OFF state (=ON state/(ON state+OFF state)), controls the power amount that is output by the RF amplifier unit **13**.

[0171] During the usual pulse operation time, the RF amplifier unit **13** is driven with a duty ratio, equal to the duty ratio of the pulse control signal that is pre-set in the gate signal generator **18**, to output RF power.

[0172] When the gate turn-off signal is received from the gate turn-off signal generator **43**, the gate signal generator **18** stops the output of the pulse control signal or reduces the duty ratio to reduce RF power, output by the RF amplifier unit **13**, or stops RF power.

[0173] A brancher **17** is a circuit that branches and supplies the pulse control signal, output by the gate signal generator **18**, to each of the RF amplifier units when there is a plurality of RF amplifier units **13**. When there is only one RF amplifier unit, the brancher **17** is not required.

[0174] (Configuration of Reflected Wave Power Amount Dropping Loop System)

[0175] The reflected wave power amount dropping loop system **50** is a feedback system that feeds back the reflected wave power feedback value PR, detected by the RF sensor **16**, to the RF amplifier unit **13** to drop the power amount of the reflected wave power of the RF generator unit **10**. The reflected wave power amount dropping loop system **50** includes a power smoothing unit **51** that is a smoothing unit for smoothing the power of the reflected wave power feedback value, a reflected wave power smoothed limit value **52** that is used as the threshold of the smoothed reflected wave power smoothed value, a reflected wave power smoothed value power error amplifier device **53** that amplifies power based on the difference between the reflected wave power smoothed value and the reflected wave power smoothed limit value, and a duty ratio dropping signal generator **54** that determines the duty ratio of the pulse control signal based on the output of the reflected wave power smoothed value power error amplifier device **53**. The reflected wave power amount dropping loop system **50** sends the output of the duty ratio dropping signal generator **54** to the gate signal generator **18**. The reflected wave power amount dropping loop system **50** controls the duty ratio of the pulse control signal to drop and reduce the power amount of the reflected wave power.

[0176] Because it is required to control the power amount without changing the voltage amplitude of reflected wave power, the reflected wave power amount dropping loop system **50** includes the power smoothing unit **51**, which calculates the average value or the effective value, as means for smoothing the reflected wave power feedback value PR. The reflected wave power amount dropping loop system **50** feeds back the calculated control amount to the RF amplifier unit **13** to control the power amount.

[0177] With the average value or the effective value of reflected wave power as the reflected wave power smoothed value, the reflected wave power amount dropping loop system **50** performs the reflected wave power dropping operation to make the reflected wave power smoothed value equal to or smaller than the reference value. In the description below, the dropping operation performed based on the average value of reflected wave power is referred to as the reflected wave power average value dropping operation, while the dropping operation performed based on the effective value of reflected wave power is referred to as the reflected wave power effective value dropping operation.

[0178] The power smoothing unit **51**, which is a circuit that smoothes the reflected wave power feedback value PR for outputting a reflected wave power smoothed value, includes an average value circuit or an effective value circuit. The average value circuit and the effective value circuit are each a circuit that calculates the average value or the effective value of the reflected wave power feedback values PR generated during the pulse operation of the RF generator unit **10**. This circuit may be configured not only by a hardware circuit but also as software operation processing. The average value

circuit, when configured by hardware, may be configured by a first-order lag circuit composed of a resistor and a capacitor.

[0179] A reflected wave power smoothed value is calculated by smoothing the reflected wave power feedback values PR as described above. This reduces heat loss in, and prevents damage to, the RF power amplifier device, not by reducing the amplitude of RF output power, but by reducing the duty ratio of the pulse control signal.

[0180] The reflected wave power smoothed limit value (reflected wave power average limit value, reflected wave power effective limit value) is the reference value to be compared with the output of the power smoothing unit (average value circuit, effective value circuit) **51** when the reflected wave power smoothed value dropping operation (reflected wave power average value dropping operation, reflected wave power effective value dropping operation) is performed. So that the smoothed value (average value, effective value) of the reflected wave power feedback values PR becomes equal to or smaller than the reflected wave power smoothed limit value (reflected wave power average limit value, reflected wave power effective limit value) during the reflected wave power smoothed value dropping operation (reflected wave power average value dropping operation, reflected wave power effective value dropping operation), the duty ratio of the pulse control signal is adjusted, the ON state of the RF gate signal generated by the gate signal generator **18** is limited, and the power amount of reflected wave power is dropped (reduced).

[0181] The reflected wave power smoothed value power error amplifier (reflected wave power average value power error amplifier device, reflected wave power effective value power error amplifier device) **53** amplifies the error, which is the difference between the reflected wave power smoothed limit value (reflected wave power average limit value, reflected wave power effective limit value) **52** and the output of the power smoothing unit (average value circuit, effective value circuit) **51**, with a predefined gain and outputs the result as the control amount.

[0182] The duty ratio dropping signal generator **54** is a circuit that determines the duty ratio between the ON state and the OFF state at pulse operation time according to the control amount output by the reflected wave power smoothed value power error amplifier device (reflected wave power average value power error amplifier device, reflected wave power effective value power error amplifier device) **53**.

[0183] During the reflected wave power smoothed value dropping operation, the gate signal generator **18** receives the pulse control signal from the duty ratio dropping signal generator **54** and generates the RF gate signal whose ON state and OFF state are based on the duty ratio of the pulse control signal. The gate signal generator **18** also receives the gate turn-off signal from the gate turn-off signal generator **43** of the arc blocking system **40**. This gate turn-off signal has priority over the duty ratio signal and stops the RF gate signal.

[0184] When the operation does not move to the reflected wave power average value dropping operation but the usual forward wave power control is performed, the duty ratio dropping signal generator **54** does not generate the duty ratio dropping signal but generates the gate signal with the pulse control signal, which has a pre-set fixed duty ratio, and performs the pulse operation.

[0185] The following describes an example of the control of the RF power supplying device of the present invention.

[Example of Control of RF Power Supplying Device]

[0186] (Forward Wave Power Control)

[0187] First, the forward wave power control performed by the forward wave power control loop system is described with reference to FIG. **9**.

[0188] When the impedance of the load **103** is matched to 50 [ohm] and there is no reflected wave power, the forward wave power control is performed by the forward wave power control loop system **20** shown in FIG. **9** (indicated by bold arrows).

[0189] During the forward wave power control, the output Vdc of the DC/DC converter **12** is made variable to control the amplitude of the RF output power so that the forward wave power instruction value **21** always matches the peak value of the forward wave power feedback value PF.

[0190] (Switching Control)

[0191] When the impedance of the load **103** is not matched to 50 [ohm] during the forward wave power control and the condition (1), (2), or (3) given below is satisfied, the control loop moves from the forward wave power control loop system **20** to a reflected wave power control loop system **100** (reflected wave power peak value dropping loop system **30**, arc blocking system **40**, or reflected wave power amount dropping loop system **50**) in which the dropping operation or the blocking operation is performed.

[0192] (1) If a first-order lag output **202**, from which a sharp variation in reflected wave power is removed, reaches a reflected wave power peak limit value **302** as shown in FIG. **3**B, the reflected wave power peak value dropping loop system **30** is activated to start the reflected wave power peak value dropping operation.

[0193] (2) If the first-order lag output **202**, from which a sharp variation in reflected wave power is removed, reaches an arc limit value **303** as shown in FIG. **3**B, the arc blocking system **40** is activated to start the arc blocking operation.

[0194] (3) If a smoothed value **203** of reflected wave power calculated by the power smoothing unit (average value circuit, effective value circuit) **51** reaches a reflected wave power smoothed value limit value (reflected wave power average limit value, reflected wave power effective value limit value) **301** as shown in FIG. **3**B, the reflected wave power amount dropping operation is started. The dropping operation and the blocking operation described above operate independently of each other.

[0195] (Reflected Wave Power Peak Value Dropping Control)

[0196] Next, the reflected wave power peak value dropping control is described below with reference to FIG. **10** to FIG. **13**. FIG. **10** shows the reflected wave power peak value dropping control loop system.

[0197] When the impedance of the load is not matched to 50 [ohm] and impedance matching is not achieved, reflected wave power is generated. If the output (for example, first-order lag output) obtained by removing a sharp variation in reflected wave power from the reflected wave power feedback value PR, which is obtained by detecting the reflected wave power, exceeds the reflected wave power peak limit value **32**, the reflected wave power peak value dropping loop system **30** shown in FIG. **10** (indicated by bold arrows) performs the reflected wave power peak value dropping operation.

[0198] By controlling the DC/DC converter **12** so that the output of the sharp variation removing unit **31** does not exceed the reflected wave power peak limit value **32**, the amplitude of the RF output power is limited to a predeter-

mined value or lower. This reflected wave power peak value dropping operation protects the RF power amplifier device from an overload or a surge voltage when reflected wave power is generated, and prevents the RF power amplifier device from being destroyed.

[0199] When the reflected wave power is reduced and the output of the sharp variation removing unit **31** falls below the reflected wave power peak limit value **32**, the control returns to the forward wave power control again.

[0200] In the flowchart shown in FIG. **11**, the RF sensor **16** detects reflected wave power (S**11**) and sends the detected reflected wave power to the sharp variation removing unit **31** to obtain the output (for example, first-order lag output) from which a sharp variation is removed (S**12**). If the output (for example, first-order lag output), from which a sharp variation in the reflected wave power is removed, exceeds the reflected wave power peak limit value **32** that is the detection level of the reflected wave power peak value (S**13**), the difference between the output (for example, first-order lag output), from which a sharp variation in the reflected wave power is removed, and the reflected wave power peak limit value **32** is calculated (S**14**) and, based on this difference, the control value is calculated (S**15**). Based on the control value, the PWM signal generation circuit **24** generates the PWM signal (S**17**). The difference and the control value can be generated by the reflected wave power peak value power error amplifier **34**.

[0201] On the other hand, if the output (for example, first-order lag output), from which a sharp variation in the reflected wave power is removed, does not exceed the reflected wave power peak limit value **32** (S**13**), the PWM signal generation circuit **24** generates the PWM signal (S**17**) based on the predetermined setting pulse width (S**16**). The DC/DC converter **12** is driven by the generated PWM signal to control the output voltage value (S**18**).

[0202] FIG. **12** is a diagram showing the forward wave power control and the reflected wave power peak value dropping operation. The horizontal axis of FIG. **12** indicates the time, and the vertical axis indicates the reflected wave power.

[0203] In the forward wave power control, the DC/DC converter is driven by the PWM signal with the predetermined pulse width. This driving increases forward wave power (not shown) and, at the same time, increases reflected wave power. When the peak value of the reflected wave power reaches the reflected wave power peak limit value, the reflected wave power peak value dropping operation is started. The reflected wave power peak value dropping operation decreases the pulse width of the PWM signal so that the peak value of reflected wave power does not exceed the reflected wave power peak limit value.

[0204] FIG. **13** schematically shows the reflected wave power peak value dropping operation when plasma ignition succeeded and when plasma ignition failed. The waveforms shown in FIG. **13** are not actual waveforms but are simplified for the sake of description. FIG. **13**A shows the forward wave power feedback value. In FIGS. **13**B and **13**E, the bold solid line indicates the reflected wave power feedback value PR, the light solid line indicates the first-order lag output of the reflected wave power feedback value, and the chain line indicates the peak dropping detection level.

[0205] FIGS. **13**A to **13**D show the waveform when the ignition succeeded, and FIGS. **13**E to **13**G show the waveform when the ignition failed.

[0206] When the ignition succeeded, the reflected wave power increases at the plasma rise time T1 and at the plasma fall time T2. At this time, if the reflected wave power peak value dropping operation is performed based on the reflected wave power feedback value PR (indicated by bold solid line), it is incorrectly determined that an abnormal condition is generated even when the normal ignition operation is performed. This reduces the amplitude of the forward wave power, making it difficult to maintain plasma.

[0207] On the other hand, the output generated by removing a sharp variation from the reflected wave power feedback value (for example, first-order lag output)(indicated by light solid line) does not reach the peak dropping detection level and, therefore, the reflected wave power peak value dropping operation is not performed. In this case, the PWM signal is not changed (FIG. **13**D) and the forward wave power control is maintained.

[0208] When the ignition failed, the output generated by removing a sharp variation from the reflected wave power feedback value (for example, first-order lag output) (indicated by light solid line) reaches the peak dropping detection level at the time T3, which is after the time T1, at ignition failure time and the reflected wave power peak value dropping operation is started. The pulse width of the PWM signal is generated (FIG. **13**G) based on the difference (FIG. **13**F) between the first-order lag output of the reflected wave power and the peak dropping detection level, and the reflected wave power voltage peak is dropped.

[0209] When the output from which a sharp variation in the reflected wave power is removed (for example, first-order lag output) is reduced and falls below the peak dropping detection level, the reflected wave power peak value dropping operation is terminated and the operation returns from the reflected wave power peak value dropping control to the forward wave power control.

[0210] (Arc Blocking Control)

[0211] Next, the arc blocking control is described with reference to FIG. **14** to FIG. **16**. FIG. **14** shows the arc blocking control loop system.

[0212] When reflected wave power increases due to a failure in the ignition of the plasma load and the reflected wave power feedback value PR exceeds the arc blocking level, the arc blocking system **40** shown in FIG. **14** (indicated by bold arrows in FIG. **14**) performs the arc blocking operation.

[0213] When the peak value, from which a sharp variation is removed by the sharp variation removing unit **31**, reaches the arc limit value **41**, the gate turn-off signal generator **43** sends the blocking signal to stop the operation of the RF amplifier unit **13** for blocking an arc.

[0214] The pulse width of the RF output power during the arc blocking operation becomes much shorter than the pre-set pulse width used in the duty ratio during the normal pulse operation and, therefore, the RF power amplifier device is not destroyed.

[0215] When the ignition fails, high power is supplied immediately be fore arc blocking and, during this period, a high voltage is applied to the load. Therefore, the protection and the ignition retry can be accomplished at the same time. When the ignition succeeds, reflected wave power at normal pulse rise time can be reduced by removing a sharp variation. Therefore, an incorrect detection of ignition determination can be prevented and the pulse operation can be continued without interruption.

[0216] In the flowchart in FIG. **15**, the RF sensor **16** detects reflected wave power (S**21**) and sends the detected reflected wave power to the sharp variation removing unit **31** to remove a sharp variation. In the description below, an example is described in which the sharp variation removing unit outputs a first-order lag.

[0217] A sharp variation is removed by generating a first-order lag output of reflected wave power (S**22**). If the obtained first-order lag output exceeds the arc limit value **41** that is the arc blocking detection level (S**23**), the gate turn-off signal is generated (S**24**).

[0218] In response to the gate turn-off signal, the gate signal generator **18** stops the output of the RF gate signal (S**25**) to stop the output of the RF amplifier unit (S**26**).

[0219] On the other hand, if the first-order lag output does not exceed the arc limit value **41** (S**23**), the gate signal generator **18** generates the RF gate signal based on the predetermined duty ratio of the pulse control signal to maintain the output of the RF amplifier unit or, if the output of the RF amplifier unit is stopped, to restart the output (S**27**).

[0220] When the ignition fails, the ignition retry function may be used to perform the re-ignition operation. The re-ignition operation tries the ignition after a predetermined stop time elapses from the time the ignition is determined to fail. This retry function allows the operator to specify the number of retries to repeat the ignition operation or the time width of the stop time. The operator may also specify that, if the ignition does not succeed within a specified number of retries, the retry operation be stopped or the retry operation be once stopped and then restarted after a predetermined time.

[0221] FIG. **16** schematically shows the arc blocking operation when plasma ignition succeeded and when plasma ignition failed. The waveforms shown in FIG. **16** are not actual waveforms but are simplified for the sake of description. FIG. **16**A and FIG. **16**D show forward wave power feedback values. In FIGS. **16**B and **16**E, the bold solid line indicates the reflected wave power feedback value PR, the light solid line indicates the first-order lag output of the reflected wave power feedback value, and the chain line indicates the arc limit value.

[0222] FIGS. **16**A to **16**C show the waveform when the ignition succeeded, and FIGS. **16**D to **16**F show the waveform when the ignition failed.

[0223] When the ignition succeeded, the reflected wave power increases at the plasma rise time t1 and at the plasma fall time t2 (FIG. **16**B). At this time, if the arc blocking operation is performed based on the reflected wave power feedback value PR (indicated by bold solid line), it is incorrectly determined that an abnormal condition, such as arc generation, is generated even when the normal ignition operation is performed, and the plasma is extinguished by the arc blocking operation.

[0224] On the other hand, the output generated by removing a sharp variation from the reflected wave power feedback value (first-order lag output (indicated by light solid line)) does not reach the arc limit value that is the arc blocking level and, therefore, the arc blocking operation is not performed. In this case, the gate turn-off signal is not output (FIG. **16**C) and the forward wave power control is maintained.

[0225] When the ignition failed, the output generated by removing a sharp variation from the reflected wave power feedback value (first-order lag output (indicated by light solid line)) reaches the arc limit value, which is the arc blocking detection level, at the time t3, which is after the time t1, at ignition failure time (FIG. **16**E). The gate turn-off signal is generated (FIG. **16**F) and the arc blocking operation is started.

[0226] When the arc blocking operation is started and the arc is extinguished, the forward wave power feedback value PF and the reflected wave power feedback value PR are reduced (FIGS. **16**D and **16**E) and the first-order lag output of the reflected wave power attenuates according to the time constant of the first-order lag circuit (FIG. **16**E).

[0227] (Reflected Wave Power Amount Dropping Control)

[0228] Next, the reflected wave power amount dropping control is described with reference to FIG. **17** to FIG. **20**. FIG. **17** schematically shows the reflected wave power amount dropping operation.

[0229] When the impedance of the load is not matched to 50 [ohm] and impedance matching is not achieved, reflected wave power is generated. If the reflected wave power smoothed value obtained by smoothing the reflected wave power feedback value PR, obtained by detecting the reflected wave power, exceeds the reflected wave power smoothed limit value **52**, the reflected wave power amount dropping loop system **50** (indicated by bold arrows) shown in FIG. **17** performs the reflected wave power amount dropping operation. The reflected wave power smoothed value is the average value or the effective value of reflected wave power.

[0230] The reflected wave power dropping operation, performed under the reflected wave power amount dropping control, controls the duty ratio of the pulse control signal so that the output of the power smoothing unit **51** does not exceed the reflected wave power smoothed limit value **52**. Limiting the width of the ON state of the RF gate signal in this manner prevents the power amount of RF output power from exceeding a predetermined value. By reducing the duty ratio of the pulse control signal, the reflected wave power amount dropping operation reduces the output power without reducing the amplitude of the PF output voltage and reduces a heat loss in the RF power amplifier device, thus preventing destruction.

[0231] When reflected wave power is reduced by the reflected wave power amount dropping operation and the output of the power smoothing unit **51** becomes smaller than the reflected wave power smoothed limit value **52**, control returns to the forward wave power control again.

[0232] In the flowchart shown in FIG. **18**, the RF sensor **16** detects reflected wave power (S**31**) and sends the detected reflected wave power to the power smoothing unit **51** to calculate the reflected wave power smoothed value (S**32**). If the reflected wave power smoothed value exceeds the reflected wave power smoothed limit value **52** that is the reflected wave power detection level (S**33**), the difference between the reflected wave power smoothed value and the reflected wave power smoothed limit value **52** is calculated (S**34**). The control value is calculated based on this difference (S**35**), and the duty ratio of the pulse control signal corresponding to the control value is calculated through duty ratio conversion. To perform the duty ratio conversion, the relation between the control value and the duty ratio corresponding to this control value is predetermined and, based on this correspondence, the duty ratio is calculated from this control value.

[0233] Based on the calculated duty ratio, the duty ratio dropping signal generator **54** generates the duty ratio dropping signal. The gate signal generator **18** generates the RF gate signal, whose ON state is reduced, based on the duty ratio dropping signal. The duty ratio dropping signal is a pulse

control signal that defines the duty ratio between the ON state and the OFF state of the RF gate signal. Reducing the ON state reduces the power amount of forward wave power and, thereby, reduces the power amount of reflected wave power (S**38**).

[0234] On the other hand, if the reflected wave power smoothed value does not exceed the reflected wave power smoothed limit value **52** (S**33**), the duty ratio dropping signal generator **54** does not generate the duty ratio dropping signal. The gate signal generator **18** generates the pulse control signal (S**38**) based on the predetermined setting duty ratio (S**37**), generates the RF gate signal based on the pulse control signal (S**39**), and drives the RF amplifier unit **13** by the generated RF gate signal to control the output power (S**40**).

[0235] FIG. **19** is a diagram showing the forward wave power control and the reflected wave power amount dropping operation. The horizontal axis of FIG. **19** indicates the time, and the vertical axis indicates the power (FIG. **19**A) and the load voltage (FIG. **19**B).

[0236] During the forward wave power control, the RF amplifier unit **13** is driven by the RF gate signal that has the ON state and the OFF state of the predetermined duty ratio. This driving increases the power of forward wave power (not shown) and, at the same time, increases the power amount of reflected wave power. When the reflected wave power smoothed value (average value or effective value), obtained by smoothing the reflected wave power, reaches the reflected wave power smoothed limit value, the reflected wave power amount dropping operation is started.

[0237] The reflected wave power amount dropping operation decreases the duty ratio of the pulse control signal to narrow the width of the ON state during which the RF gate signal is output. By doing so, the reflected wave power amount dropping operation controls the power amount of reflected wave power so that it does not exceed the reflected wave power smoothed limit value.

[0238] FIG. **19**A shows an example in which the average value is used as the smoothed value. Through the reflected wave power average value dropping operation, the upper limit of the reflected wave power average value can be controlled so that it does not exceed the reflected wave power average limit value.

[0239] FIG. **19**B, which shows the load voltage, indicates that the voltage applied to the load during the reflected wave power average value dropping operation is kept constant. The supplied power is reduced by reducing the number of cycles of RF voltages applied during one period of the pulse operation.

[0240] FIG. **20** schematically shows the reflected wave power amount dropping operation. The waveforms shown in FIG. **20** are not actual waveforms but are simplified for the sake of description.

[0241] FIG. **20**A to **20**C show the case in which the reflected wave power smoothed value exceeds the reflected smoothed limit value, and FIG. **20**D to **20**F show a state after the reflected wave power amount dropping operation.

[0242] FIG. **20**A shoes the reflected wave power and FIG. **20**D shows the reflected wave power smoothed value. FIG. **20**D, **20**E show the pulse control signal, and FIG. **20**C, **20**F show a RF gate signal. The pulse control signal in the figures represent the ON state, in which the gate signal is output, and the OFF state in which the gate signal is not output. The signal waveforms are not actual waveforms but are simplified for the sake of description.

[0243] When RF signal (FIG. **20**C) is generated based on the pulse control signal (FIG. **20**B) determined by the pre-set duty ratio and the smoothed value average value or smoothed value of the reflected wave power exceeds the smoothed limit value (FIG. **20**A) in FIG. **20**A to FIG. **20**C, the duty ratio of the pulse control signal is reduced and the reflected wave power amount is dropped

[0244] FIG. **20**D to FIG. **20**F show a state after the reflected wave power amount dropping operation. The output power is controlled by that the duty ratio of the pulse control signal is reduced, and the pulse control signal (FIG. **20**E) determined by the duty ratio is output. The RF signal is generated based on the pulse control signal (FIG. **20**F) and the reflected wave power amount is dropped.

[0245] The following shows the table indicating the relation among the reflected wave power peak value dropping control, arc blocking control, and reflected wave power amount dropping control that are included in the reflected wave power control of the present invention.

TABLE 1

	Control		
	Reflected wave power amount dropping control	Reflected wave power peak value dropping control	Arc blocking control
Detection level	Low	Intermediate	High
Control value	Smoothed value of reflected wave power (average value, effective value)	Signal generated by removing sharp variation from reflected wave power (first-order lag)	Signal generated by removing sharp variation from reflected wave power (first-order lag)
Control target	RF output power Smoothed power amount of reflected wave power	RF output power Peak value of reflected wave power	RF output power Peak value of reflected wave power
Control target unit	RF power amplifier unit	DC/DC converter (voltage conversion unit)	RF power amplifier unit
Control amount	Duty ratio between ON state and OFF state of gate signal, Pulse control signal of class-D amplifier unit	PWM signal of DC/DC converter	Gate signal of class-D amplifier unit
Purpose	Prevention of thermal destruction of RF power amplifier device Maintenance of ignition voltage amplitude	Prevention of destruction of RF power amplifier device due to surge voltage	RF generator protection

[0246] The description of the embodiments and modifications described above are an example of the RF power supplying device and the reflected wave power control method of the present invention. It is to be understood that the present invention is not limited to the embodiments but may be modi-

fied in various ways based on the spirit of the present invention and that those modifications are included in the scope of the present invention.

INDUSTRIAL APPLICABILITY

[0247] The RF power supplying device and the reflected wave power control method of the present invention are applicable to a power supply that supplies power to a plasma generation device.

DESCRIPTION OF REFERENCE NUMERALS

[0248] **1** RF power supplying device
[0249] **10** RF generator unit
[0250] **11** DC power supply
[0251] **12** Converter
[0252] **13** Amplifier unit
[0253] **14** Synthesizer
[0254] **15** Low-pass filter
[0255] **16** Sensor
[0256] **17** Brancher
[0257] **18** Gate signal generator
[0258] **20** Forward wave power control loop system
[0259] **21** Forward wave power instruction value
[0260] **22** Hold circuit
[0261] **23** Forward wave power error amplifier device
[0262] **24** PWM signal generation circuit
[0263] **25** Drive circuit
[0264] **30** Reflected wave power peak value dropping loop system
[0265] **31** Sharp variation removing unit
[0266] **32** Reflected wave power peak limit value
[0267] **33** Hold circuit
[0268] **34** Reflected wave power peak value power error amplifier
[0269] **40** Arc blocking system
[0270] **41** Arc limit value
[0271] **42** Comparator
[0272] **43** Gate turn-off signal generator
[0273] **50** Reflected wave power amount dropping loop system
[0274] **51** Power smoothing unit
[0275] **52** Reflected wave power smoothed limit value
[0276] **53** Reflected wave power smoothed value power error amplifier device
[0277] **54** Duty ratio dropping signal generator
[0278] **60** Circuit
[0279] **61** Hold circuit
[0280] **62** Error amplifier circuit
[0281] **63** Resistor
[0282] **64** Resistor
[0283] **65** Switch circuit
[0284] **66** Operational amplifier
[0285] **70** Circuit
[0286] **71** Hold circuit
[0287] **72** Error amplifier circuit
[0288] **73** Resistor
[0289] **74** Resistor
[0290] **75** Switch circuit
[0291] **76** Operational amplifier
[0292] **77** Buffer circuit
[0293] **80** First-order lag circuit
[0294] **81** Resistor
[0295] **82** Capacitor
[0296] **90** Filter circuit
[0297] **91** Differentiation circuit
[0298] **92** Comparator circuit
[0299] **93** Limit value
[0300] **94** Delay circuit
[0301] **95** Switching circuit
[0302] **100** Reflected wave power control loop system
[0303] **101** Generator output end
[0304] **102** Coaxial cable
[0305] **103** Load
[0306] **120** Amplifier unit
[0307] **120*a*-120*d*** MOSFET
[0308] **120*e*** Main transformer
[0309] **120*f*** Filter
[0310] **202** First-order lag output
[0311] **203** Smoothed value
[0312] **301** Limit value
[0313] **302** Reflected wave power peak limit value
[0314] **303** Arc limit value
[0315] Edc DC voltage
[0316] PF Forward wave power feedback value
[0317] PR Reflected wave power feedback value
[0318] Vdc DC voltage

1. An RF power supplying device that supplies RF power to a plasma load, said RF power supplying device comprising:

an RF generator unit that converts DC of a DC power supply to RF AC through a switching operation and outputs RF power; and

a feedback system that feeds back a detection value of the RF output of said RF generator unit for performing feedback control, wherein

said feedback system comprises:

a forward wave power control loop system that feeds back a detection value of forward wave power, which is sent from said RF generator unit to a plasma load, for controlling the forward wave power; and

a plurality of reflected wave power control loop systems each of which feeds back a detection value of reflected wave power, which is sent from said plasma load to said RF generator unit, for controlling the reflected wave power,

said reflected wave power control loop system comprising:

a reflected wave power peak value dropping loop system and an arc blocking system that control a peak variation in reflected wave power and a reflected wave power amount dropping loop system that controls a smoothed power amount of reflected wave power, wherein

said reflected wave power peak value dropping loop system controls a DC voltage of the DC power supply of said RF generator unit based on a peak value of reflected wave power and, through the voltage control of the DC power supply, controls whether to drop the peak value of reflected wave power,

said arc blocking system controls whether to output from an RF amplifier unit of said RF generator unit, based on the peak value of reflected wave power, to control whether to supply power to the plasma load and thereby controls arc blocking at the plasma load, and

said reflected wave power amount dropping loop system controls a duty ratio (time ratio) between an ON state and an OFF state of the RF amplifier unit of said RF generator unit, based on a smoothed power amount of reflected wave power, to control a supply amount of

power to the plasma load and thereby controls dropping of a power amount of reflected wave power.

2. The RF power supplying device according to claim **1**, wherein

said reflected wave power peak value dropping loop system comprises a reflected wave power peak limit value as a threshold for determining whether peak value dropping control of reflected wave power is to be performed, and

a difference between the detection value of reflected wave power and the reflected wave power peak limit value is fed back to said forward wave power control loop system to control a pulse width of a PWM signal, which drives a DC/DC converter provided in said RF generator unit, for controlling the DC voltage of the DC power supply.

3. The RF power supplying device according to claim **1**, wherein

said ark blocking system comprises an arc limit value as a threshold for determining whether RF power is to be output, and

an RF gate signal is controlled based on a comparison between the detection value of reflected wave power and the arc limit value for controlling whether RF power of the RF amplifier unit is to be output, the RF gate signal controlling the RF amplifier unit provided in said RF generator unit.

4. The RF power supplying device according to claim **1**, wherein

said reflected wave power amount dropping loop system comprises:

a power smoothing unit that outputs an average value or an effective value of the detection values of reflected wave power; and

a reflected wave power average limit value or a reflected wave power effective limit value as a reflected wave power dropping limit value that defines whether to drop a power amount of RF power as well as a dropping amount, wherein

based on a comparison between an average value output of said power smoothing unit and the reflected wave power average limit value or a comparison between an effective value output of said power smoothing unit and the reflected wave power effective limit value, a duty ratio (time ratio between an ON state and an OFF state of the RF amplifier unit) of a pulse control signal is determined for controlling a power amount dropping of RF power of the RF amplifier unit, the pulse control signal controlling the RF amplifier unit provided in said RF generator unit.

5. The RF power supplying device according to one of claims **1** to **3** wherein

at least one of said reflected wave power peak value dropping loop system and said arc blocking system comprises a sharp variation removing unit that removes a sharp variation from the detection value of reflected wave power, wherein

said sharp variation removing unit removes a sharp variation amount, generated by a sharp variation, from the detection value of reflected wave power and feeds back a signal corresponding to a peak value of reflected wave power not generated by the sharp variation.

6. The RF power supplying device according to claim **5** wherein

said sharp variation removing unit is a first-order lag circuit that causes a first-order lag in the detection values of reflected wave power.

7. A reflected wave power control method for an RF power supply that supplies RF power to a plasma load, said RF power supply comprising:

an RF generator unit that converts DC of a DC power supply to RF AC through a switching operation and outputs RF power; and

a feedback system that feeds back a detection value of the RF output of said RF generator unit for performing feedback control, wherein

said feedback system comprises:

a forward wave power control loop system that feeds back a detection value of forward wave power, which is sent from said RF generator unit to a plasma load, for controlling the forward wave power; and

a plurality of reflected wave power control loop systems each of which feeds back a detection value of reflected wave power, which is sent from said plasma load to said RF generator unit, for controlling the reflected wave power,

said reflected wave power control loop system comprising:

a reflected wave power peak value dropping loop system and an arc blocking system that control a peak variation in reflected wave power; and a reflected wave power amount dropping loop system that controls a smoothed power amount of reflected wave power, wherein

said reflected wave power peak value dropping loop system controls a DC voltage of the DC power supply of said RF generator unit based on a peak value of reflected wave power and, through the voltage control of the DC power supply, controls whether to drop the peak value of reflected wave power,

said arc blocking system controls whether to output from an RF amplifier unit of said RF generator unit, based on the peak value of reflected wave power, to control whether to supply power to the plasma load and thereby controls arc blocking at the plasma load, and

said reflected wave power amount dropping loop system controls a duty ratio (time ratio) between an ON state and an OFF state of the RF amplifier unit of said RF generator unit, based on a smoothed power amount of reflected wave power, to control a supply amount of power to the plasma load and thereby controls dropping of a power amount of reflected wave power.

8. The reflected wave power control method according to claim **7**, wherein

said reflected wave power peak value dropping loop system comprises a reflected wave power peak limit value as a threshold for determining whether peak value dropping control of reflected wave power is to be performed, and

a difference between the detection value of reflected wave power and the reflected wave power peak limit value is fed back to said forward wave power control loop system to control a pulse width of a PWM signal, which drives a DC/DC converter provided in said RF generator unit, for controlling the DC voltage of the DC power supply.

9. The reflected wave power control method according to claim **7**, wherein

said ark blocking system comprises an arc limit value as a threshold for determining whether RF power is to be output, and

an RF gate signal is controlled based on a comparison between the detection value of reflected wave power and the arc limit value for controlling whether RF power of the RF amplifier unit is to be output, the RF gate signal controlling the RF amplifier unit provided in said RF generator unit.

10. The reflected wave power control method according to claim **7**, wherein

said reflected wave power amount dropping loop system comprises:

a power smoothing unit that outputs an average value or an effective value of the detection values of reflected wave power; and

a reflected wave power average limit value or a reflected wave power effective limit value as a reflected wave power dropping limit value that defines whether to drop a power amount of RF power as well as a dropping amount, wherein

based on a comparison between an average value output of said power smoothing unit and the reflected wave power average limit value or a comparison between an effective value output of said power smoothing unit and the reflected wave power effective limit value, a duty ratio (time ratio between an ON state and an OFF state of the RF amplifier unit) of a pulse control signal is determined for controlling a power amount dropping of RF power of the RF amplifier unit, the pulse control signal controlling the RF amplifier unit provided in said RF generator unit.

11. The reflected wave power control method according to one of claims **7** to **9** wherein

at least one of said reflected wave power peak value dropping loop system and said arc blocking system comprises a sharp variation removing unit that removes a sharp variation from the detection value of reflected wave power, wherein

said sharp variation removing unit removes a sharp variation amount, generated by a sharp variation, from the detection value of reflected wave power and feeds back a signal corresponding to a peak value of reflected wave power not generated by the sharp variation.

12. The reflected wave power control method according to claim **11** wherein

said sharp variation removing unit removes the sharp variation, generated by a sharp variation, from the detection value of reflected wave power by causing a first-order lag in the detection value of reflected wave power.

* * * * *