US009078607B2

(12) United States Patent
Heller et al.

(10) Patent No.: US 9,078,607 B2
(45) Date of Patent: *Jul. 14, 2015

(54) **ANALYTE MONITORING DEVICE AND METHODS OF USE**

(71) Applicant: **Abbott Diabetes Care Inc.**, Alameda, CA (US)

(72) Inventors: **Adam Heller**, Austin, TX (US); **Benjamin Jay Feldman**, Oakland, CA (US); **Shridhara Alva Karinka**, Pleasanton, CA (US); **Yi Wang**, San Ramon, CA (US); **John R. Galasso**, St. Helena, CA (US)

(73) Assignee: **Abbott Diabetes Care Inc.**, Alameda, CA (US)

(*) Notice: Subject to any disclaimer, the term of this patent is extended or adjusted under 35 U.S.C. 154(b) by 0 days.

This patent is subject to a terminal disclaimer.

(21) Appl. No.: **13/920,063**

(22) Filed: **Jun. 17, 2013**

(65) **Prior Publication Data**

US 2013/0281809 A1 Oct. 24, 2013

Related U.S. Application Data

(63) Continuation of application No. 12/495,807, filed on Jun. 30, 2009, now Pat. No. 8,465,425, which is a continuation-in-part of application No. 11/265,787, filed on Nov. 1, 2005.

(51) **Int. Cl.**
A61B 5/1495 (2006.01)
A61B 5/1473 (2006.01)
(Continued)

(52) **U.S. Cl.**
CPC ***A61B 5/14532*** (2013.01); ***A61B 5/1473*** (2013.01); ***A61B 5/1495*** (2013.01); ***A61B 5/14546*** (2013.01); ***A61B 5/14865*** (2013.01); ***A61B 5/7445*** (2013.01); *A61B 2562/0295* (2013.01)

(58) **Field of Classification Search**
CPC A61B 2562/0295; A61B 5/14532; A61B 5/14546; A61B 5/1473; A61B 5/14865; A61B 5/1495; A61B 5/7445
USPC 600/345–366, 309
See application file for complete search history.

(56) **References Cited**

U.S. PATENT DOCUMENTS

2,402,306 A 6/1946 Turkel
2,719,797 A 10/1955 Rosenblatt et al.
(Continued)

FOREIGN PATENT DOCUMENTS

AU 2002246889 12/2005
CA 2433144 8/2002
(Continued)

OTHER PUBLICATIONS

Chinese Patent Application No. 201080029808.2, Original Language and English Translation of Office Action mailed Aug. 22, 2013.
(Continued)

Primary Examiner — Navin Natnithithadha
(74) *Attorney, Agent, or Firm* — Jackson & Co., LLP

(57) **ABSTRACT**

In aspects of the present disclosure, an auto turn on blood glucose monitoring unit including a calibration unit integrated with one or more components of an analyte monitoring system is provided. Also disclosed are methods, systems, devices and kits for providing the same.

20 Claims, 37 Drawing Sheets

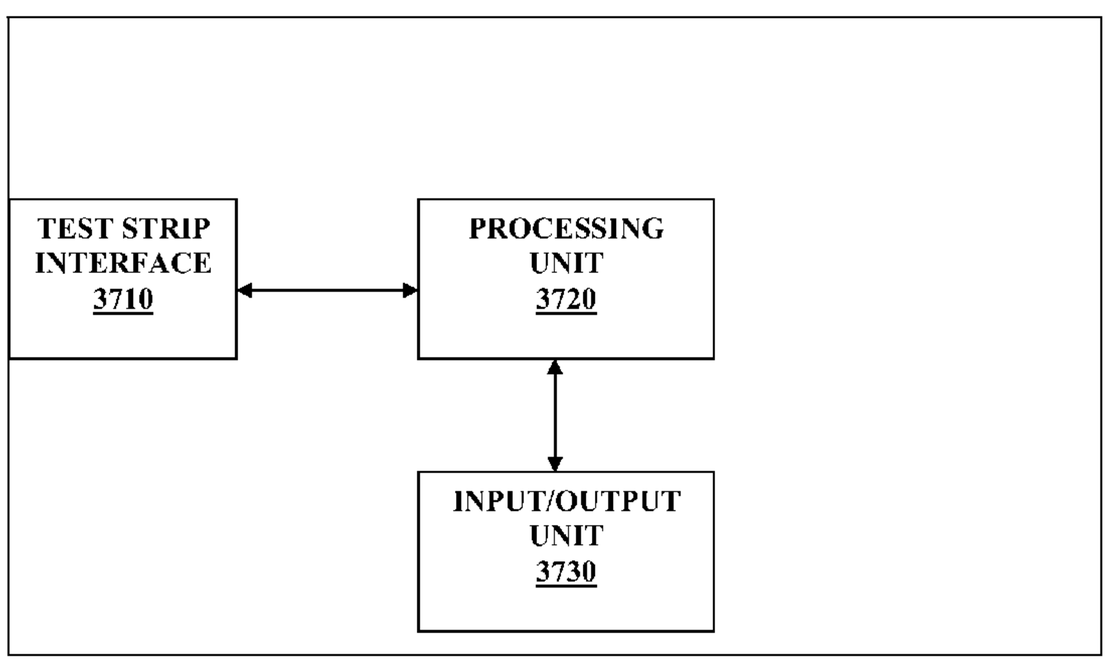

446/448

(51) **Int. Cl.**

A61B 5/145	(2006.01)
A61B 5/1486	(2006.01)
A61B 5/00	(2006.01)

(56) **References Cited**

U.S. PATENT DOCUMENTS

3,132,123	A	5/1964	Harris, Jr. et al.
3,210,578	A	10/1965	Sherer
3,219,533	A	11/1965	Mullins
3,260,656	A	7/1966	Ross, Jr.
3,282,875	A	11/1966	Connolly et al.
3,304,413	A	2/1967	Lehmann et al.
3,310,606	A	3/1967	Fritz
3,381,371	A	5/1968	Russell
3,397,191	A	8/1968	Beckerbauer
3,635,926	A	1/1972	Gresham et al.
3,651,318	A	3/1972	Czekajewski
3,652,475	A	3/1972	Wada et al.
3,653,841	A	4/1972	Klein
3,698,386	A	10/1972	Fried
3,719,564	A	3/1973	Lilly, Jr. et al.
3,768,014	A	10/1973	Smith et al.
3,775,182	A	11/1973	Patton et al.
3,776,832	A	12/1973	Oswin et al.
3,785,939	A	1/1974	Hsu
3,791,871	A	2/1974	Rowley
3,814,079	A	6/1974	Le Roy, Sr.
3,826,244	A	7/1974	Salcman et al.
3,837,339	A	9/1974	Aisenberg et al.
3,838,033	A	9/1974	Mindt et al.
3,851,018	A	11/1974	Kelly
3,898,984	A	8/1975	Mandel et al.
3,912,614	A	10/1975	Spracklen et al.
3,919,051	A	11/1975	Koch et al.
3,926,760	A	12/1975	Allen et al.
3,929,971	A	12/1975	Roy
3,930,889	A	1/1976	Ruggiero et al.
3,933,593	A	1/1976	Sternberg
3,943,918	A	3/1976	Lewis
3,957,613	A	5/1976	Macur
3,964,974	A	6/1976	Banauch et al.
3,966,580	A	6/1976	Janata et al.
3,972,320	A	8/1976	Kalman
3,979,274	A	9/1976	Newman
3,982,530	A	9/1976	Storch
4,008,717	A	2/1977	Kowarski
4,016,866	A	4/1977	Lawton
4,024,312	A	5/1977	Korpman
4,032,729	A	6/1977	Koistinen
4,036,749	A	7/1977	Anderson
4,037,563	A	7/1977	Pflueger et al.
4,040,908	A	8/1977	Clark, Jr.
4,052,754	A	10/1977	Homsey
4,055,175	A	10/1977	Clemens et al.
4,059,406	A	11/1977	Fleet
4,059,708	A	11/1977	Heiss, Jr. et al.
4,067,322	A	1/1978	Johnson
4,073,713	A	2/1978	Newman
4,076,596	A	2/1978	Connery et al.
4,076,656	A	2/1978	White et al.
4,098,574	A	7/1978	Dappen
4,100,048	A	7/1978	Pompei et al.
4,120,292	A	10/1978	LeBlanc, Jr. et al.
4,129,128	A	12/1978	McFarlane
4,146,029	A	3/1979	Ellinwood, Jr.
4,151,845	A	5/1979	Clemens
4,154,231	A	5/1979	Russell
4,168,205	A	9/1979	Danniger et al.
4,172,770	A	10/1979	Semersky et al.
4,178,916	A	12/1979	McNamara
4,184,429	A	1/1980	Widmer
4,193,982	A	3/1980	Avrameas et al.
4,197,840	A	4/1980	Beck et al.
4,206,755	A	6/1980	Klein
4,215,703	A	8/1980	Wilson
4,224,125	A	9/1980	Nakamura et al.
4,240,438	A	12/1980	Updike et al.
4,240,889	A	12/1980	Yoda et al.
4,241,438	A	12/1980	Kern
4,245,634	A	1/1981	Albisser et al.
4,247,297	A	1/1981	Berti et al.
4,253,469	A	3/1981	Aslan
4,255,500	A	3/1981	Hooke
4,259,540	A	3/1981	Sabia
4,271,449	A	6/1981	Grogan
4,275,225	A	6/1981	Krespan
4,276,888	A	7/1981	Smith et al.
4,282,872	A	8/1981	Franetzki et al.
4,294,258	A	10/1981	Bernard
4,318,784	A	3/1982	Higgins et al.
4,324,257	A	4/1982	Albarda et al.
4,327,725	A	5/1982	Cortese et al.
4,331,869	A	5/1982	Rollo
4,335,255	A	6/1982	Krespan
4,340,458	A	7/1982	Lerner et al.
4,344,438	A	8/1982	Schultz
4,345,603	A	8/1982	Schulman
4,352,960	A	10/1982	Dormer et al.
4,353,888	A	10/1982	Sefton
4,356,074	A	10/1982	Johnson
4,357,282	A	11/1982	Anderson et al.
4,360,019	A	11/1982	Portner et al.
4,365,637	A	12/1982	Johnson
4,366,033	A	12/1982	Richter et al.
4,374,013	A	2/1983	Enfors
4,375,399	A	3/1983	Havas et al.
4,384,586	A	5/1983	Christiansen
4,388,166	A	6/1983	Suzuki et al.
4,390,621	A	6/1983	Bauer
4,392,933	A	7/1983	Nakamura et al.
4,401,122	A	8/1983	Clark, Jr.
4,403,847	A	9/1983	Chrestensen
4,403,984	A	9/1983	Ash et al.
4,404,066	A	9/1983	Johnson
4,407,288	A	10/1983	Langer et al.
4,407,959	A	10/1983	Tsuji et al.
4,415,666	A	11/1983	D'Orazio et al.
4,417,588	A	11/1983	Houghton et al.
4,418,148	A	11/1983	Oberhardt
4,419,535	A	12/1983	O'Hara
4,420,564	A	12/1983	Tsuji et al.
4,425,920	A	1/1984	Bourland et al.
4,427,004	A	1/1984	Miller et al.
4,427,770	A	1/1984	Chen et al.
4,431,004	A	2/1984	Bessman et al.
4,431,507	A	2/1984	Nankai et al.
4,436,094	A	3/1984	Cerami
4,440,175	A	4/1984	Wilkins
4,442,841	A	4/1984	Uehara et al.
4,443,218	A	4/1984	DeCant, Jr. et al.
4,444,892	A	4/1984	Malmros
4,450,842	A	5/1984	Zick et al.
4,458,686	A	7/1984	Clark, Jr.
4,461,691	A	7/1984	Frank
4,467,811	A	8/1984	Clark, Jr.
4,469,110	A	9/1984	Slama
4,476,003	A	10/1984	Frank et al.
4,477,314	A	10/1984	Richter et al.
4,478,976	A	10/1984	Goertz et al.
4,483,924	A	11/1984	Tsuji et al.
4,484,987	A	11/1984	Gough
4,494,950	A	1/1985	Fischell
4,498,843	A	2/1985	Schneider et al.
4,499,249	A	2/1985	Nakagawa et al.
4,506,680	A	3/1985	Stokes
4,512,348	A	4/1985	Uchigaki et al.
RE31,916	E	6/1985	Oswin et al.
4,522,690	A	6/1985	Venkatsetty
4,524,114	A	6/1985	Samuels et al.
4,526,661	A	7/1985	Steckhan et al.
4,526,948	A	7/1985	Resnick
4,527,240	A	7/1985	Kvitash
4,530,696	A	7/1985	Bisera et al.
4,534,356	A	8/1985	Papadakis

(56) **References Cited**

U.S. PATENT DOCUMENTS

4,534,825 A 8/1985 Koning et al.
4,538,616 A 9/1985 Rogoff
4,543,955 A 10/1985 Schroeppel
4,544,869 A 10/1985 Pittaway
4,545,382 A 10/1985 Higgins et al.
4,552,840 A 11/1985 Riffer
4,554,927 A 11/1985 Fussell
4,560,534 A 12/1985 Kung et al.
4,561,443 A 12/1985 Hogrefe et al.
4,569,589 A 2/1986 Neufeld
4,571,292 A 2/1986 Liu et al.
4,573,994 A 3/1986 Fischell et al.
4,577,642 A 3/1986 Stokes
4,578,215 A 3/1986 Bradley
4,581,336 A 4/1986 Malloy et al.
4,583,976 A 4/1986 Ferguson
4,595,011 A 6/1986 Phillips
4,595,479 A 6/1986 Kimura et al.
4,614,760 A 9/1986 Homan et al.
4,619,754 A 10/1986 Niki et al.
4,619,793 A 10/1986 Lee
4,627,445 A 12/1986 Garcia et al.
4,627,908 A 12/1986 Miller
4,633,878 A 1/1987 Bombardien
4,633,881 A 1/1987 Moore et al.
4,637,403 A 1/1987 Garcia et al.
RE32,361 E 2/1987 Duggan
4,648,408 A 3/1987 Hutcheson et al.
4,650,547 A 3/1987 Gough
4,653,513 A 3/1987 Dombrowski
4,654,197 A 3/1987 Lilja et al.
4,655,880 A 4/1987 Liu
4,655,885 A 4/1987 Hill et al.
4,658,463 A 4/1987 Sugita et al.
4,663,824 A 5/1987 Kenmochi
4,671,288 A 6/1987 Gough
4,672,970 A 6/1987 Uchida et al.
4,674,652 A 6/1987 Aten et al.
4,679,562 A 7/1987 Luksha
4,680,268 A 7/1987 Clark, Jr.
4,681,111 A 7/1987 Silvian
4,682,602 A 7/1987 Prohaska
4,684,537 A 8/1987 Graetzel et al.
4,685,463 A 8/1987 Williams
4,686,624 A 8/1987 Blum et al.
4,698,582 A 10/1987 Braun et al.
4,699,157 A 10/1987 Shonk
4,703,756 A 11/1987 Gough et al.
4,711,245 A 12/1987 Higgins et al.
4,711,251 A 12/1987 Stokes
4,714,462 A 12/1987 DiDomenico
4,714,874 A 12/1987 Morris et al.
4,717,673 A 1/1988 Wrighton et al.
4,718,893 A 1/1988 Dorman
4,721,601 A 1/1988 Wrighton et al.
4,721,677 A 1/1988 Clark, Jr.
4,726,378 A 2/1988 Kaplan
4,726,716 A 2/1988 McGuire
4,731,051 A 3/1988 Fischell
4,731,726 A 3/1988 Allen, III
4,747,828 A 5/1988 Tseo
4,749,985 A 6/1988 Corsberg
4,750,496 A 6/1988 Reinhart
4,753,652 A 6/1988 Langer et al.
4,755,173 A 7/1988 Konopka
4,757,022 A 7/1988 Shults et al.
4,758,323 A 7/1988 Davis et al.
4,759,371 A 7/1988 Franetzki
4,759,828 A 7/1988 Young et al.
4,764,416 A 8/1988 Ueyama et al.
4,776,904 A 10/1988 Charlton et al.
4,776,944 A 10/1988 Janata et al.
4,777,953 A 10/1988 Ash et al.
4,779,618 A 10/1988 Mund et al.
4,781,798 A 11/1988 Gough
4,784,736 A 11/1988 Lonsdale et al.
4,787,398 A 11/1988 Garcia et al.
4,787,837 A 11/1988 Bell
4,795,707 A 1/1989 Niiyama et al.
4,796,634 A 1/1989 Huntsman et al.
4,803,243 A 2/1989 Fujimoto et al.
4,803,625 A 2/1989 Fu et al.
4,803,726 A 2/1989 Levine et al.
4,805,624 A 2/1989 Yao et al.
4,805,625 A 2/1989 Wyler
4,810,470 A 3/1989 Burkhardt et al.
4,813,424 A 3/1989 Wilkins
4,815,469 A 3/1989 Cohen et al.
4,820,399 A 4/1989 Senda et al.
4,821,733 A 4/1989 Peck
4,822,337 A 4/1989 Newhouse et al.
4,826,810 A 5/1989 Aoki
4,830,959 A 5/1989 McNeil et al.
4,831,070 A 5/1989 McInally et al.
4,832,034 A 5/1989 Pizziconi et al.
4,832,797 A 5/1989 Vadgama et al.
4,835,372 A 5/1989 Gombrich et al.
RE32,947 E 6/1989 Dormer et al.
4,836,904 A 6/1989 Armstrong et al.
4,837,049 A 6/1989 Byers et al.
4,838,887 A 6/1989 Idriss
4,840,893 A 6/1989 Hill et al.
RE32,974 E 7/1989 Porat et al.
4,844,076 A 7/1989 Lesho et al.
4,845,035 A 7/1989 Fanta et al.
4,848,351 A 7/1989 Finch
4,849,458 A 7/1989 Reed et al.
4,852,573 A 8/1989 Kennedy
4,854,322 A 8/1989 Ash et al.
4,856,340 A 8/1989 Garrison
4,857,713 A 8/1989 Brown
4,858,617 A 8/1989 Sanders
4,870,561 A 9/1989 Love et al.
4,871,351 A 10/1989 Feingold
4,871,440 A 10/1989 Nagata et al.
4,874,499 A 10/1989 Smith et al.
4,874,500 A 10/1989 Madou et al.
4,875,486 A 10/1989 Rapoport et al.
4,882,013 A 11/1989 Turner et al.
4,883,057 A 11/1989 Broderick
4,886,740 A 12/1989 Vadgama
4,889,744 A 12/1989 Quaid
4,890,620 A 1/1990 Gough
4,890,621 A 1/1990 Hakky
4,891,104 A 1/1990 Liston et al.
4,894,137 A 1/1990 Takizawa et al.
4,896,142 A 1/1990 Aycox et al.
4,897,162 A 1/1990 Lewandowski et al.
4,897,173 A 1/1990 Nankai et al.
4,897,457 A 1/1990 Nakamura et al.
4,899,839 A 2/1990 Dessertine et al.
4,900,405 A 2/1990 Otagawa et al.
4,902,294 A 2/1990 Gosserez
4,907,857 A 3/1990 Giuliani et al.
4,909,908 A 3/1990 Ross et al.
4,911,794 A 3/1990 Parce et al.
4,917,800 A 4/1990 Lonsdale et al.
4,919,114 A 4/1990 Miyazaki
4,919,141 A 4/1990 Zier et al.
4,919,767 A 4/1990 Vadgama et al.
4,919,770 A 4/1990 Preidel et al.
4,920,969 A 5/1990 Suzuki
4,920,977 A 5/1990 Haynes
4,923,586 A 5/1990 Katayama et al.
4,925,268 A 5/1990 Iyer et al.
4,927,407 A 5/1990 Dorman
4,927,516 A 5/1990 Yamaguchi et al.
4,929,426 A 5/1990 Bodai et al.
4,931,795 A 6/1990 Gord
4,934,369 A 6/1990 Maxwell
4,935,105 A 6/1990 Churchouse
4,935,345 A 6/1990 Guilbeau et al.
4,936,956 A 6/1990 Wrighton
4,938,860 A 7/1990 Wogoman

(56) **References Cited**

U.S. PATENT DOCUMENTS

4,942,127	A	7/1990	Wada et al.
4,944,299	A	7/1990	Silvian
4,945,045	A	7/1990	Forrest et al.
4,950,378	A	8/1990	Nagata
4,953,552	A	9/1990	DeMarzo
4,954,129	A	9/1990	Giuliani et al.
4,955,861	A	9/1990	Enegren et al.
4,957,115	A	9/1990	Selker
4,958,148	A	9/1990	Olson
4,958,632	A	9/1990	Duggan
4,963,245	A	10/1990	Weetall
4,963,595	A	10/1990	Ward et al.
4,968,400	A	11/1990	Shimomura et al.
4,969,468	A	11/1990	Byers et al.
4,970,145	A	11/1990	Bennetto et al.
4,974,592	A	12/1990	Branco
4,974,929	A	12/1990	Curry
4,975,175	A	12/1990	Karube et al.
4,979,509	A	12/1990	Hakky
4,984,929	A	1/1991	Rock et al.
4,986,271	A	1/1991	Wilkins
4,986,671	A	1/1991	Sun et al.
4,988,341	A	1/1991	Columbus et al.
4,988,758	A	1/1991	Fukuda et al.
4,990,845	A	2/1991	Gord
4,991,582	A	2/1991	Byers et al.
4,992,794	A	2/1991	Brouwers
4,994,068	A	2/1991	Hufnagie
4,994,167	A	2/1991	Shults et al.
4,995,402	A	2/1991	Smith et al.
5,001,054	A	3/1991	Wagner
5,002,054	A	3/1991	Ash et al.
5,002,055	A	3/1991	Merki et al.
5,002,572	A	3/1991	Picha
5,007,427	A	4/1991	Suzuki et al.
5,007,929	A	4/1991	Quaid
5,014,718	A	5/1991	Mitchen
5,016,172	A	5/1991	Dessertine
5,016,201	A	5/1991	Bryan et al.
5,016,631	A	5/1991	Hogrefe et al.
5,019,974	A	5/1991	Beckers
5,027,499	A	7/1991	Prohaska
5,029,583	A	7/1991	Meserol et al.
5,030,333	A	7/1991	Clark, Jr.
5,034,112	A	7/1991	Murase et al.
5,034,192	A	7/1991	Wrighton et al.
5,035,860	A	7/1991	Kleingeld et al.
5,036,860	A	8/1991	Leigh et al.
5,036,861	A	8/1991	Sembrowich et al.
5,037,527	A	8/1991	Hayashi et al.
5,047,044	A	9/1991	Smith et al.
5,049,487	A	9/1991	Phillips et al.
5,050,612	A	9/1991	Matsumura
5,055,171	A	10/1991	Peck
5,058,592	A	10/1991	Whisler
5,059,654	A	10/1991	Hou et al.
5,063,081	A	11/1991	Cozzette et al.
5,067,491	A	11/1991	Taylor et al.
5,068,536	A	11/1991	Rosenthal
5,070,535	A	12/1991	Hochmair et al.
5,072,732	A	12/1991	Rapoport et al.
5,073,500	A	12/1991	Saito et al.
5,074,977	A	12/1991	Cheung et al.
5,076,273	A	12/1991	Schoendorfer et al.
5,077,476	A	12/1991	Rosenthal
5,078,854	A	1/1992	Burgess et al.
5,082,550	A	1/1992	Rishpon et al.
5,082,786	A	1/1992	Nakamoto
5,084,828	A	1/1992	Kaufman et al.
5,088,981	A	2/1992	Howson et al.
5,089,112	A	2/1992	Skotheim et al.
5,094,951	A	3/1992	Rosenberg
5,095,904	A	3/1992	Seligman et al.
5,096,560	A	3/1992	Takai et al.
5,096,836	A	3/1992	Macho et al.
5,097,834	A	3/1992	Skrabal
5,101,814	A	4/1992	Palti
5,106,365	A	4/1992	Hernandez
5,108,564	A	4/1992	Szuminsky et al.
5,108,819	A	4/1992	Heller et al.
5,108,889	A	4/1992	Smith et al.
5,109,850	A	5/1992	Blanco et al.
5,111,539	A	5/1992	Hiruta et al.
5,111,818	A	5/1992	Suzuki et al.
5,114,678	A	5/1992	Crawford et al.
5,120,420	A	6/1992	Nankai et al.
5,120,421	A	6/1992	Glass et al.
5,126,034	A	6/1992	Carter et al.
5,126,247	A	6/1992	Palmer et al.
5,130,009	A	7/1992	Marsoner et al.
5,131,441	A	7/1992	Simpson et al.
5,133,856	A	7/1992	Yamaguchi et al.
5,134,391	A	7/1992	Okada
5,135,003	A	8/1992	Souma
5,137,028	A	8/1992	Nishimura
5,139,023	A	8/1992	Stanley et al.
5,140,393	A	8/1992	Hijikihigawa et al.
5,140,985	A	8/1992	Schroeder et al.
5,141,868	A	8/1992	Shanks et al.
5,147,725	A	9/1992	Pinchuk
5,153,827	A	10/1992	Coutre et al.
5,160,418	A	11/1992	Mullen
5,161,532	A	11/1992	Joseph
5,165,407	A	11/1992	Wilson et al.
5,168,046	A	12/1992	Hamamoto et al.
5,171,689	A	12/1992	Kawaguri et al.
5,174,291	A	12/1992	Schoonen et al.
5,176,632	A	1/1993	Bernardi
5,176,644	A	1/1993	Srisathapat et al.
5,176,662	A	1/1993	Bartholomew et al.
5,182,707	A	1/1993	Cooper et al.
5,184,359	A	2/1993	Tsukamura et al.
5,185,256	A	2/1993	Nankai et al.
5,190,038	A	3/1993	Polson et al.
5,190,041	A	3/1993	Palti
5,192,415	A	3/1993	Yoshioka et al.
5,192,416	A	3/1993	Wang et al.
5,193,539	A	3/1993	Schulman et al.
5,193,540	A	3/1993	Schulman et al.
5,197,322	A	3/1993	Indravudh
5,198,192	A	3/1993	Saito et al.
5,198,367	A	3/1993	Aizawa et al.
5,198,771	A	3/1993	Fidler et al.
5,200,051	A	4/1993	Cozzette et al.
5,202,261	A	4/1993	Musho et al.
5,205,920	A	4/1993	Oyama et al.
5,206,145	A	4/1993	Cattell
5,208,147	A	5/1993	Kagenow et al.
5,208,154	A	5/1993	Weaver et al.
5,209,229	A	5/1993	Gilli
5,215,887	A	6/1993	Saito
5,216,597	A	6/1993	Beckers
5,217,442	A	6/1993	Davis
5,217,595	A	6/1993	Smith et al.
5,226,423	A	7/1993	Tenerz et al.
5,227,042	A	7/1993	Zawodzinski et al.
5,229,282	A	7/1993	Yoshioka et al.
5,231,988	A	8/1993	Wernicke et al.
5,232,668	A	8/1993	Grant et al.
5,234,835	A	8/1993	Nestor et al.
5,235,003	A	8/1993	Ward et al.
5,243,696	A	9/1993	Carr et al.
5,243,983	A	9/1993	Tarr et al.
5,246,867	A	9/1993	Lakowicz et al.
5,249,576	A	10/1993	Goldberger et al.
5,250,439	A	10/1993	Musho et al.
5,251,126	A	10/1993	Kahn et al.
5,257,971	A	11/1993	Lord et al.
5,257,980	A	11/1993	Van Antwerp et al.
5,259,769	A	11/1993	Cruise et al.
5,261,401	A	11/1993	Baker et al.
5,262,035	A	11/1993	Gregg et al.
5,262,305	A	11/1993	Heller et al.
5,264,092	A	11/1993	Skotheim et al.

(56) **References Cited**

U.S. PATENT DOCUMENTS

5,264,103 A 11/1993 Yoshioka et al.
5,264,104 A 11/1993 Gregg et al.
5,264,105 A 11/1993 Gregg et al.
5,264,106 A 11/1993 McAleer et al.
5,265,888 A 11/1993 Yamamoto et al.
5,266,179 A 11/1993 Nankai et al.
5,269,212 A 12/1993 Peters et al.
5,269,891 A 12/1993 Colin
5,271,736 A 12/1993 Picha
5,271,815 A 12/1993 Wong
5,272,060 A 12/1993 Hamamoto et al.
5,275,159 A 1/1994 Griebel
5,276,610 A 1/1994 Maeda et al.
5,278,079 A 1/1994 Gubinski et al.
5,279,294 A 1/1994 Anderson
5,279,543 A 1/1994 Glikfeld et al.
5,281,319 A 1/1994 Kaneko et al.
5,281,395 A 1/1994 Markart et al.
5,282,848 A 2/1994 Schmitt
5,282,950 A 2/1994 Dietze et al.
5,284,140 A 2/1994 Allen et al.
5,284,156 A 2/1994 Schramm et al.
5,284,570 A 2/1994 Savage et al.
5,284,748 A 2/1994 Mroczkawski et al.
5,285,513 A 2/1994 Kaufman et al.
5,285,792 A 2/1994 Sjoquist et al.
5,286,362 A 2/1994 Hoenes et al.
5,286,364 A 2/1994 Yacynych et al.
5,288,387 A 2/1994 Ito et al.
5,288,636 A 2/1994 Pollmann et al.
5,291,887 A 3/1994 Stanley et al.
5,293,546 A 3/1994 Tadros et al.
5,298,144 A 3/1994 Spokane
5,299,571 A 4/1994 Mastrototaro
5,304,127 A 4/1994 Kawahara et al.
5,304,468 A 4/1994 Phillips et al.
5,307,263 A 4/1994 Brown
5,309,919 A 5/1994 Snell et al.
5,310,469 A 5/1994 Cunningham et al.
5,310,885 A 5/1994 Maier et al.
5,312,361 A 5/1994 Zadini et al.
5,312,762 A 5/1994 Guiseppi-Elie
5,314,450 A 5/1994 Thompson
5,314,471 A 5/1994 Brauker et al.
5,316,008 A 5/1994 Suga et al.
5,318,521 A 6/1994 Slettenmark
5,320,098 A 6/1994 Davidson
5,320,725 A 6/1994 Gregg et al.
5,322,063 A 6/1994 Allen et al.
5,324,303 A 6/1994 Strong et al.
5,324,316 A 6/1994 Schulman et al.
5,324,322 A 6/1994 Grill et al.
5,326,356 A 7/1994 Della Valle et al.
5,326,449 A 7/1994 Cunningham
5,328,460 A 7/1994 Lord et al.
5,330,521 A 7/1994 Cohen
5,330,634 A 7/1994 Wong et al.
5,331,555 A 7/1994 Hashimoto et al.
5,331,966 A 7/1994 Bennett et al.
5,332,479 A 7/1994 Uenoyama et al.
5,336,204 A 8/1994 Matyas
5,337,258 A 8/1994 Dennis
5,337,747 A 8/1994 Neftei
5,340,722 A 8/1994 Wolfbeis et al.
5,342,409 A 8/1994 Mullett
5,342,789 A 8/1994 Chick et al.
5,343,869 A 9/1994 Pross et al.
5,344,454 A 9/1994 Clarke et al.
5,348,788 A 9/1994 White
5,350,407 A 9/1994 McClure et al.
5,352,348 A 10/1994 Young et al.
5,352,351 A 10/1994 White
5,354,319 A 10/1994 Wyborny et al.
5,354,447 A 10/1994 Uenoyama et al.
5,354,449 A 10/1994 Band et al.
5,356,348 A 10/1994 Bellio et al.
5,356,786 A 10/1994 Heller et al.
5,358,514 A 10/1994 Schulman et al.
5,362,307 A 11/1994 Guy et al.
5,364,797 A 11/1994 Olson et al.
5,366,609 A 11/1994 White et al.
5,368,028 A 11/1994 Palti
5,368,224 A 11/1994 Richardson et al.
5,368,562 A 11/1994 Blomquist et al.
5,370,622 A 12/1994 Livingston et al.
5,371,687 A 12/1994 Holmes, II et al.
5,371,734 A 12/1994 Fischer
5,372,133 A 12/1994 Hogen Esch
5,372,719 A 12/1994 Afejan et al.
5,375,604 A 12/1994 Kelly et al.
5,376,070 A 12/1994 Purvis et al.
5,376,251 A 12/1994 Kaneko et al.
5,377,258 A 12/1994 Bro
5,378,628 A 1/1995 Gratzel et al.
5,379,238 A 1/1995 Stark
5,380,422 A 1/1995 Negishis et al.
5,380,536 A 1/1995 Hubbell et al.
5,382,346 A 1/1995 Uenoyama et al.
5,384,028 A 1/1995 Ito
5,387,327 A 2/1995 Khan
5,390,671 A 2/1995 Lord et al.
5,391,250 A 2/1995 Cheney, II et al.
5,393,903 A 2/1995 Gratzel et al.
5,395,504 A 3/1995 Saurer et al.
5,397,848 A 3/1995 Yang et al.
5,399,823 A 3/1995 McCusker
5,400,782 A 3/1995 Beaubiah
5,401,376 A 3/1995 Foos et al.
5,405,510 A 4/1995 Betts et al.
5,407,554 A 4/1995 Saurer
5,408,999 A 4/1995 Singh et al.
5,410,471 A 4/1995 Alyfuku et al.
5,410,474 A 4/1995 Fox
5,411,536 A 5/1995 Armstrong
5,411,647 A 5/1995 Johnson et al.
5,411,866 A 5/1995 Luong
5,413,690 A 5/1995 Kost et al.
5,422,246 A 6/1995 Koopal et al.
5,425,361 A 6/1995 Fenzlein et al.
5,425,717 A 6/1995 Mohiuddin
5,426,032 A 6/1995 Phillips
5,429,129 A 7/1995 Lovejoy et al.
5,429,735 A 7/1995 Johnson et al.
5,431,160 A 7/1995 Wilkins
5,431,691 A 7/1995 Snell et al.
5,431,806 A 7/1995 Suzuki et al.
5,431,921 A 7/1995 Thombre
5,433,710 A 7/1995 Van Antwerp et al.
5,437,973 A 8/1995 Vadgama et al.
5,437,999 A 8/1995 Dieboid et al.
5,438,984 A 8/1995 Schoendorfer
5,445,611 A 8/1995 Eppstein et al.
5,445,920 A 8/1995 Saito
5,448,992 A 9/1995 Kupershmidt
5,451,260 A 9/1995 Versteeg et al.
5,452,173 A 9/1995 Brannon et al.
5,453,199 A 9/1995 Afejan et al.
5,453,278 A 9/1995 Chan et al.
5,456,692 A 10/1995 Smith, Jr. et al.
5,456,940 A 10/1995 Funderburk
5,458,140 A 10/1995 Eppstein et al.
5,460,618 A 10/1995 Harreld
5,462,051 A 10/1995 Oka et al.
5,462,064 A 10/1995 D'Angelo et al.
5,462,525 A 10/1995 Srisathapat et al.
5,462,645 A 10/1995 Albery et al.
5,466,218 A 11/1995 Srisathapat et al.
5,466,356 A 11/1995 Schneider et al.
5,469,846 A 11/1995 Khan
5,472,317 A 12/1995 Field et al.
5,473,990 A 12/1995 Anderson et al.
5,474,552 A 12/1995 Palti
5,476,460 A 12/1995 Montalvo
5,476,488 A 12/1995 Morgan et al.

(56) **References Cited**

U.S. PATENT DOCUMENTS

5,476,776 A 12/1995 Wilkins
5,477,855 A 12/1995 Schindler et al.
5,482,008 A 1/1996 Stafford et al.
5,482,473 A 1/1996 Lord et al.
5,484,404 A 1/1996 Schulman et al.
5,487,751 A 1/1996 Radons et al.
5,491,474 A 2/1996 Suni et al.
5,494,562 A 2/1996 Maley et al.
5,496,453 A 3/1996 Uenoyama et al.
5,497,772 A 3/1996 Schulman et al.
5,501,665 A 3/1996 Jhuboo et al.
5,501,956 A 3/1996 Wada et al.
5,502,396 A 3/1996 Desarzens et al.
5,505,709 A 4/1996 Funderburk
5,505,713 A 4/1996 Van Antwerp et al.
5,507,288 A 4/1996 Bocker et al.
5,508,171 A 4/1996 Walling et al.
5,508,203 A 4/1996 Fuller et al.
5,509,410 A 4/1996 Hill et al.
5,513,636 A 5/1996 Palti
5,514,103 A 5/1996 Srisathapat et al.
5,514,253 A 5/1996 Davis et al.
5,518,006 A 5/1996 Mawhirt et al.
5,518,601 A 5/1996 Foos et al.
5,520,731 A 5/1996 Esser et al.
5,520,787 A 5/1996 Hanagan et al.
5,522,865 A 6/1996 Schulman et al.
5,525,511 A 6/1996 D'Costa
5,526,120 A 6/1996 Jina et al.
5,527,288 A 6/1996 Gross et al.
5,527,307 A 6/1996 Srisathapat et al.
5,529,676 A 6/1996 Maley et al.
5,531,679 A 7/1996 Schulman et al.
5,531,878 A 7/1996 Vadgama et al.
5,538,007 A 7/1996 Gorman
5,538,511 A 7/1996 Van Antwerp et al.
5,540,828 A 7/1996 Yacynych
5,544,651 A 8/1996 Wilk
5,545,152 A 8/1996 Funderburk et al.
5,545,191 A 8/1996 Mann et al.
5,545,220 A 8/1996 Andrews et al.
5,545,223 A 8/1996 Neuenfeldt et al.
5,549,113 A 8/1996 Halleck et al.
5,549,115 A 8/1996 Morgan et al.
5,549,675 A 8/1996 Neuenfeldt et al.
5,551,427 A 9/1996 Altman
5,551,953 A 9/1996 Lattin et al.
5,552,027 A 9/1996 Birkle et al.
5,553,616 A 9/1996 Ham et al.
5,554,166 A 9/1996 Lange et al.
5,556,524 A 9/1996 Albers
5,558,640 A 9/1996 Pfeiler et al.
5,560,357 A 10/1996 Faupei et al.
5,562,713 A 10/1996 Silvian
5,564,439 A 10/1996 Picha
5,565,085 A 10/1996 Ikeda et al.
5,567,302 A 10/1996 Song et al.
5,568,806 A 10/1996 Cheney, II et al.
5,569,186 A 10/1996 Lord et al.
5,569,212 A 10/1996 Brown
5,569,462 A 10/1996 Martinson et al.
5,571,395 A 11/1996 Park et al.
5,571,682 A 11/1996 Jacobs et al.
5,573,506 A 11/1996 Vasko
5,573,647 A 11/1996 Maley et al.
5,575,895 A 11/1996 Ikeda et al.
5,575,930 A 11/1996 Tietje-Girault et al.
5,580,527 A 12/1996 Bell et al.
5,580,794 A 12/1996 Allen
5,582,184 A 12/1996 Erickson et al.
5,582,593 A 12/1996 Hultman
5,582,697 A 12/1996 Ikeda et al.
5,582,698 A 12/1996 Flaherty et al.
5,584,813 A 12/1996 Livingston et al.
5,584,876 A 12/1996 Bruchman et al.
5,586,553 A 12/1996 Halli et al.
5,587,273 A 12/1996 Yan et al.
5,588,560 A 12/1996 Benedict et al.
5,589,045 A 12/1996 Hyodo
5,589,133 A 12/1996 Suzuki
5,589,326 A 12/1996 Deng et al.
5,589,563 A 12/1996 Ward et al.
5,590,651 A 1/1997 Shaffer et al.
5,593,390 A 1/1997 Castellano et al.
5,593,440 A 1/1997 Brauker et al.
5,593,852 A 1/1997 Heller et al.
5,594,906 A 1/1997 Holmes, II et al.
5,596,150 A 1/1997 Arndt et al.
5,596,994 A 1/1997 Bro
5,601,435 A 2/1997 Quy
5,601,694 A 2/1997 Maley et al.
5,605,152 A 2/1997 Slate et al.
5,607,565 A 3/1997 Azarnia et al.
5,611,900 A 3/1997 Worden et al.
5,615,671 A 4/1997 Schoonen et al.
5,616,222 A 4/1997 Maley et al.
5,617,851 A 4/1997 Lipkovker
5,623,925 A 4/1997 Swenson et al.
5,624,537 A 4/1997 Turner et al.
5,628,309 A 5/1997 Brown
5,628,310 A 5/1997 Rao et al.
5,628,890 A 5/1997 Carter et al.
5,629,981 A 5/1997 Nerlikar
5,637,095 A 6/1997 Nason et al.
5,640,470 A 6/1997 Lyer et al.
5,640,764 A 6/1997 Strojnik
5,640,954 A 6/1997 Pfeiffer et al.
5,642,365 A 6/1997 Murakami et al.
5,643,212 A 7/1997 Coutre et al.
5,647,853 A 7/1997 Feldmann et al.
5,650,062 A 7/1997 Ikeda et al.
5,651,767 A 7/1997 Schulman et al.
5,651,869 A 7/1997 Yoshioka et al.
5,653,735 A 8/1997 Chen et al.
5,653,756 A 8/1997 Clarke et al.
5,653,863 A 8/1997 Glenshaw et al.
5,658,250 A 8/1997 Blomquist et al.
5,658,330 A 8/1997 Carlisle et al.
5,660,163 A 8/1997 Schulman et al.
5,662,694 A 9/1997 Lidman et al.
5,665,065 A 9/1997 Colman et al.
5,667,983 A 9/1997 Abel et al.
5,670,031 A 9/1997 Hintsche et al.
5,676,820 A 10/1997 Wang et al.
5,678,571 A 10/1997 Brown
5,679,690 A 10/1997 Andre et al.
5,680,858 A 10/1997 Hansen et al.
5,682,233 A 10/1997 Brinda
5,682,884 A 11/1997 Hill
5,683,562 A 11/1997 Schaffar et al.
5,686,717 A 11/1997 Knowles et al.
5,686,829 A 11/1997 Girault
5,687,717 A 11/1997 Halpern et al.
5,690,893 A 11/1997 Ozawa et al.
5,693,577 A 12/1997 Krenik et al.
5,694,952 A 12/1997 Lidman et al.
5,695,473 A 12/1997 Olsen
5,695,623 A 12/1997 Michel et al.
5,695,947 A 12/1997 Guo et al.
5,695,949 A 12/1997 Galen et al.
5,696,314 A 12/1997 McCaffrey et al.
5,701,894 A 12/1997 Cherry et al.
5,704,354 A 1/1998 Priedel et al.
5,704,922 A 1/1998 Brown
5,706,807 A 1/1998 Picha
5,707,502 A 1/1998 McCaffrey et al.
5,708,247 A 1/1998 McAleer et al.
5,710,011 A 1/1998 Forrow et al.
5,710,630 A 1/1998 Essenpreis et al.
5,711,001 A 1/1998 Bussan et al.
5,711,297 A 1/1998 Iliff et al.
5,711,861 A 1/1998 Ward et al.
5,711,862 A 1/1998 Sakoda et al.
5,711,868 A 1/1998 Maley et al.

(56) **References Cited**

U.S. PATENT DOCUMENTS

5,713,353 A 2/1998 Castano
5,713,888 A 2/1998 Neuenfeldt et al.
5,714,123 A 2/1998 Sohrab
5,718,234 A 2/1998 Warden et al.
5,720,720 A 2/1998 Laske et al.
5,720,733 A 2/1998 Brown
5,720,862 A 2/1998 Hamamoto et al.
5,721,783 A 2/1998 Anderson
5,722,397 A 3/1998 Eppstein
5,727,548 A 3/1998 Hill et al.
5,728,074 A 3/1998 Castellano et al.
5,728,352 A 3/1998 Poto et al.
5,730,124 A 3/1998 Yamauchi
5,730,654 A 3/1998 Brown
5,730,714 A 3/1998 Guy et al.
5,733,336 A 3/1998 Neuenfeldt et al.
5,735,273 A 4/1998 Kurnik et al.
5,735,285 A 4/1998 Albert et al.
5,739,039 A 4/1998 Girault et al.
5,741,211 A 4/1998 Renirie et al.
5,741,319 A 4/1998 Woloszko et al.
5,741,330 A 4/1998 Brauker et al.
5,741,634 A 4/1998 Nozoe et al.
5,741,688 A 4/1998 Oxenboll et al.
5,743,262 A 4/1998 Lepper, Jr. et al.
5,746,217 A 5/1998 Erickson et al.
5,746,697 A 5/1998 Swedlow et al.
5,747,453 A 5/1998 Holladay et al.
5,747,669 A 5/1998 Suzuki
5,748,103 A 5/1998 Flach et al.
5,749,832 A 5/1998 Vadgama et al.
5,749,907 A 5/1998 Mann
5,750,926 A 5/1998 Schulman et al.
5,756,632 A 5/1998 Ward et al.
5,759,364 A 6/1998 Charlton et al.
5,766,151 A 6/1998 Valley et al.
5,770,028 A 6/1998 Maley et al.
5,771,001 A 6/1998 Cobb
5,771,890 A 6/1998 Tamada
5,771,891 A 6/1998 Gozani
5,772,586 A 6/1998 Heinonen et al.
5,776,106 A 7/1998 Matyas
5,777,060 A 7/1998 Van Antwerp
5,779,665 A 7/1998 Mastrototaro et al.
5,781,455 A 7/1998 Hyodo
5,782,814 A 7/1998 Brown et al.
5,782,912 A 7/1998 Brauker et al.
5,785,681 A 7/1998 Indravudh
5,786,439 A 7/1998 Van Antwerp et al.
5,786,584 A 7/1998 Button et al.
5,787,900 A 8/1998 Butler et al.
5,788,678 A 8/1998 Van Antwerp
5,791,344 A 8/1998 Schulman et al.
5,792,117 A 8/1998 Brown
5,792,668 A 8/1998 Fuller et al.
5,795,543 A 8/1998 Poto et al.
5,795,774 A 8/1998 Matsumoto et al.
5,798,065 A 8/1998 Picha
5,800,387 A 9/1998 Duffy et al.
5,800,420 A 9/1998 Gross et al.
5,800,529 A 9/1998 Brauker et al.
5,804,047 A 9/1998 Karube et al.
5,804,048 A 9/1998 Wong et al.
5,806,517 A 9/1998 Gerhardt et al.
5,807,315 A 9/1998 Van Antwerp et al.
5,807,375 A 9/1998 Gross et al.
5,807,406 A 9/1998 Brauker et al.
5,811,487 A 9/1998 Schulz, Jr. et al.
5,814,599 A 9/1998 Mitragotri et al.
5,820,551 A 10/1998 Hill et al.
5,820,570 A 10/1998 Erickson et al.
5,820,622 A 10/1998 Gross et al.
5,822,715 A 10/1998 Worthington et al.
5,823,802 A 10/1998 Bartley
5,825,488 A 10/1998 Kohl et al.
5,827,179 A 10/1998 Lichter et al.
5,827,183 A 10/1998 Kurnik et al.
5,827,184 A 10/1998 Netherly et al.
5,828,943 A 10/1998 Brown
5,830,132 A 11/1998 Robinson
5,830,341 A 11/1998 Gilmartin
5,832,448 A 11/1998 Brown
5,833,603 A 11/1998 Kovacs et al.
5,834,224 A 11/1998 Ruger et al.
5,835,508 A 11/1998 Kushita
5,836,887 A 11/1998 Oka et al.
5,836,989 A 11/1998 Shelton
5,837,454 A 11/1998 Cozzette et al.
5,837,546 A 11/1998 Allen et al.
5,837,728 A 11/1998 Purcell
5,840,020 A 11/1998 Heinonen et al.
5,840,148 A 11/1998 Campbell et al.
5,840,240 A 11/1998 Stenoien et al.
5,842,983 A 12/1998 Abel et al.
5,843,140 A 12/1998 Strojnik
5,844,862 A 12/1998 Cocatre-Zilgien
5,846,702 A 12/1998 Deng et al.
5,846,744 A 12/1998 Athey et al.
5,848,991 A 12/1998 Gross et al.
5,851,197 A 12/1998 Marano et al.
5,854,078 A 12/1998 Asher et al.
5,854,189 A 12/1998 Kruse et al.
5,857,967 A 1/1999 Frid et al.
5,857,983 A 1/1999 Douglas et al.
5,860,917 A 1/1999 Comanor et al.
5,861,009 A 1/1999 Armstrong et al.
5,861,019 A 1/1999 Sun et al.
5,862,803 A 1/1999 Besson et al.
5,871,465 A 2/1999 Vasko
5,871,499 A 2/1999 Hahn et al.
5,871,514 A 2/1999 Wiklund et al.
5,872,713 A 2/1999 Douglas et al.
5,872,820 A 2/1999 Upadrasta
5,873,990 A 2/1999 Wojciechowski et al.
5,876,484 A 3/1999 Raskin et al.
5,879,163 A 3/1999 Brown et al.
5,879,311 A 3/1999 Duchon et al.
5,879,373 A 3/1999 Roper et al.
5,880,829 A 3/1999 Kauhaniemi et al.
5,882,494 A 3/1999 Van Antwerp
5,885,211 A 3/1999 Eppstein et al.
5,885,245 A 3/1999 Lynch et al.
5,885,429 A 3/1999 Friese et al.
5,887,133 A 3/1999 Brown et al.
5,895,235 A 4/1999 Droz
5,895,371 A 4/1999 Levitas et al.
5,897,493 A 4/1999 Brown
5,897,578 A 4/1999 Wiklund et al.
5,898,025 A 4/1999 Burg et al.
5,899,855 A 5/1999 Brown
5,899,931 A 5/1999 Deschamp et al.
5,904,708 A 5/1999 Goedeke
5,913,310 A 6/1999 Brown
5,913,827 A 6/1999 Gorman
5,913,998 A 6/1999 Butler et al.
5,914,026 A 6/1999 Blubaugh, Jr. et al.
5,916,445 A 6/1999 Hjerten et al.
5,917,346 A 6/1999 Gord
5,918,603 A 7/1999 Brown
5,919,215 A 7/1999 Wiklund et al.
5,923,679 A 7/1999 Itoh et al.
5,924,979 A 7/1999 Swedlow et al.
5,925,021 A 7/1999 Castellano et al.
5,928,130 A 7/1999 Schmidt
5,931,791 A 8/1999 Saltzstein et al.
5,931,814 A 8/1999 Alex et al.
5,933,136 A 8/1999 Brown
5,935,099 A 8/1999 Peterson et al.
5,935,785 A 8/1999 Reber et al.
5,940,801 A 8/1999 Brown
5,942,979 A 8/1999 Luppino
5,944,661 A 8/1999 Swette et al.
5,945,345 A 8/1999 Blatt et al.
5,947,749 A 9/1999 Rathburn

(56) **References Cited**

U.S. PATENT DOCUMENTS

5,947,921	A	9/1999	Johnson et al.
5,948,512	A	9/1999	Kubota et al.
5,949,790	A	9/1999	Pehkonen et al.
5,950,632	A	9/1999	Reber et al.
5,951,300	A	9/1999	Brown
5,951,492	A	9/1999	Douglas et al.
5,951,521	A	9/1999	Mastrototaro et al.
5,951,836	A	9/1999	McAleer et al.
5,954,643	A	9/1999	Van Antwerp
5,954,685	A	9/1999	Tierny
5,954,700	A	9/1999	Kovelman
5,954,954	A	9/1999	Houck et al.
5,956,501	A	9/1999	Brown
5,957,854	A	9/1999	Besson et al.
5,957,890	A	9/1999	Mann et al.
5,957,903	A	9/1999	Mirzaee et al.
5,957,958	A	9/1999	Schulman et al.
5,959,050	A	9/1999	Mosbach et al.
5,960,403	A	9/1999	Brown
5,961,451	A	10/1999	Reber et al.
5,963,132	A	10/1999	Yoakum
5,964,804	A	10/1999	Brauker et al.
5,964,993	A	10/1999	Blubaugh, Jr. et al.
5,965,380	A	10/1999	Heller et al.
5,968,839	A	10/1999	Blatt et al.
5,971,922	A	10/1999	Arita et al.
5,971,941	A	10/1999	Simons et al.
5,972,199	A	10/1999	Heller et al.
5,974,124	A	10/1999	Schlueter, Jr. et al.
5,976,085	A	11/1999	Kimball et al.
5,977,476	A	11/1999	Guha et al.
5,981,294	A	11/1999	Blatt et al.
5,985,129	A	11/1999	Gough et al.
5,987,352	A	11/1999	Klein et al.
5,987,353	A	11/1999	Khatchatrian et al.
5,989,409	A	11/1999	Kurnik et al.
5,994,476	A	11/1999	Shin et al.
5,995,860	A	11/1999	Sun et al.
5,995,869	A	11/1999	Cormier et al.
5,997,475	A	12/1999	Bortz
5,997,476	A	12/1999	Brown
5,997,501	A	12/1999	Gross et al.
5,998,791	A	12/1999	Matsumora
5,999,848	A	12/1999	Gord et al.
5,999,849	A	12/1999	Gord et al.
6,001,067	A	12/1999	Shults et al.
6,001,471	A	12/1999	Bries et al.
6,002,954	A	12/1999	Van Antwerp et al.
6,002,961	A	12/1999	Mitragotri et al.
6,004,441	A	12/1999	Fujiwara et al.
6,007,845	A	12/1999	Domb
6,011,984	A	1/2000	Van Antwerp et al.
6,013,113	A	1/2000	Mika
6,014,577	A	1/2000	Henning et al.
6,015,390	A	1/2000	Krag
6,016,448	A	1/2000	Busacker et al.
6,017,435	A	1/2000	Hassard et al.
6,018,678	A	1/2000	Mitragotri et al.
6,020,110	A	2/2000	Williams et al.
6,023,629	A	2/2000	Tamada
6,024,699	A	2/2000	Surwit et al.
6,026,320	A	2/2000	Carlson et al.
6,027,445	A	2/2000	Von Bahr
6,027,459	A	2/2000	Shain et al.
6,027,692	A	2/2000	Galen et al.
6,032,059	A	2/2000	Henning et al.
6,032,199	A	2/2000	Lim et al.
6,033,866	A	3/2000	Guo et al.
6,034,622	A	3/2000	Levine
6,035,237	A	3/2000	Schulman et al.
6,036,924	A	3/2000	Simons et al.
6,040,194	A	3/2000	Chick et al.
6,041,253	A	3/2000	Kost et al.
6,043,437	A	3/2000	Schulman et al.
6,046,056	A	4/2000	Parce et al.
6,048,691	A	4/2000	Maracas
6,049,727	A	4/2000	Crothall
6,051,372	A	4/2000	Bayerl et al.
6,051,389	A	4/2000	Ahl et al.
6,056,718	A	5/2000	Funderburk et al.
6,057,377	A	5/2000	Sasaki et al.
6,059,946	A	5/2000	Yukawa et al.
6,063,459	A	5/2000	Velte
6,063,637	A	5/2000	Arnold et al.
6,065,154	A	5/2000	Hulings et al.
6,066,083	A	5/2000	Slater et al.
6,066,243	A	5/2000	Anderson et al.
6,066,448	A	5/2000	Wohlstadter et al.
6,067,474	A	5/2000	Schulman et al.
6,068,615	A	5/2000	Brown et al.
6,071,249	A	6/2000	Cunningham et al.
6,071,251	A	6/2000	Cunningham et al.
6,071,294	A	6/2000	Simons et al.
6,071,391	A	6/2000	Gotoh et al.
6,071,406	A	6/2000	Tsou
6,073,049	A	6/2000	Alt et al.
6,074,725	A	6/2000	Kennedy
6,081,735	A	6/2000	Diab et al.
6,081,736	A	6/2000	Colvin et al.
6,083,523	A	7/2000	Dionne et al.
6,083,710	A	7/2000	Heller et al.
6,088,608	A	7/2000	Schulman et al.
6,091,975	A	7/2000	Daddona et al.
6,091,976	A	7/2000	Pfeiffer et al.
6,093,156	A	7/2000	Cunningham et al.
6,093,167	A	7/2000	Houben et al.
6,093,172	A	7/2000	Funderburk et al.
6,097,831	A	8/2000	Wieck et al.
6,099,484	A	8/2000	Douglas et al.
6,101,478	A	8/2000	Brown
6,103,033	A	8/2000	Say et al.
6,103,533	A	8/2000	Hassard et al.
6,106,780	A	8/2000	Douglas et al.
6,107,083	A	8/2000	Collins et al.
6,110,148	A	8/2000	Brown et al.
6,110,152	A	8/2000	Kovelman
6,113,537	A	9/2000	Castano
6,113,578	A	9/2000	Brown
6,115,634	A	9/2000	Donders et al.
6,117,290	A	9/2000	Say
6,119,028	A	9/2000	Schulman et al.
6,120,676	A	9/2000	Heller et al.
6,121,009	A	9/2000	Heller et al.
6,122,351	A	9/2000	Schlueter, Jr. et al.
6,122,536	A	9/2000	Sun et al.
6,123,827	A	9/2000	Wong et al.
6,123,902	A	9/2000	Koch et al.
6,125,978	A	10/2000	Ando et al.
6,134,461	A	10/2000	Say et al.
6,134,504	A	10/2000	Douglas et al.
6,135,978	A	10/2000	Houben et al.
6,139,718	A	10/2000	Kurnik et al.
6,141,573	A	10/2000	Kurnik et al.
6,142,939	A	11/2000	Eppstein et al.
6,142,972	A	11/2000	Cheikh
6,143,164	A	11/2000	Heller et al.
6,144,837	A	11/2000	Quy
6,144,869	A	11/2000	Berner et al.
6,144,871	A	11/2000	Saito et al.
6,144,922	A	11/2000	Douglas et al.
6,148,094	A	11/2000	Kinsella
6,150,128	A	11/2000	Uretsky
6,151,586	A	11/2000	Brown
6,153,062	A	11/2000	Saito et al.
6,153,069	A	11/2000	Pottgen et al.
6,154,675	A	11/2000	Juran et al.
6,154,676	A	11/2000	Levine
6,159,147	A	12/2000	Lichter et al.
6,161,095	A	12/2000	Brown
6,162,611	A	12/2000	Heller et al.
6,162,639	A	12/2000	Douglas
6,164,284	A	12/2000	Schulman et al.
6,167,362	A	12/2000	Brown et al.
6,167,614	B1	1/2001	Tuttle et al.

(56) **References Cited**

U.S. PATENT DOCUMENTS

6,168,563 B1 1/2001 Brown
6,168,568 B1 1/2001 Gavriely
6,169,155 B1 1/2001 Alvarez et al.
6,170,318 B1 1/2001 Lewis
6,171,294 B1 1/2001 Southam et al.
6,175,752 B1 1/2001 Say et al.
6,180,416 B1 1/2001 Kurnik et al.
6,186,145 B1 2/2001 Brown
6,187,062 B1 2/2001 Oweis et al.
6,189,536 B1 2/2001 Martinez et al.
6,192,891 B1 2/2001 Gravel et al.
6,193,873 B1 2/2001 Ohara et al.
6,196,970 B1 3/2001 Brown
6,198,957 B1 3/2001 Green
6,200,265 B1 3/2001 Walsh et al.
6,200,772 B1 3/2001 Vadgama et al.
6,201,979 B1 3/2001 Kurnik et al.
6,201,980 B1 3/2001 Darrow et al.
6,201,993 B1 3/2001 Kruse et al.
6,206,841 B1 3/2001 Cunningham et al.
6,206,856 B1 3/2001 Mahurkar
6,207,400 B1 3/2001 Kwon
6,208,894 B1 3/2001 Schulman et al.
6,210,272 B1 4/2001 Brown
6,210,976 B1 4/2001 Sabbadini
6,212,416 B1 4/2001 Ward et al.
6,212,424 B1 4/2001 Robinson
6,214,185 B1 4/2001 Offenbacher et al.
6,216,033 B1 4/2001 Southam et al.
6,219,565 B1 4/2001 Cupp et al.
6,219,574 B1 4/2001 Cormier et al.
6,223,083 B1 4/2001 Rosar
6,223,471 B1 5/2001 Barber
6,224,745 B1 5/2001 Baltruschat
6,230,051 B1 5/2001 Cornier et al.
6,230,059 B1 5/2001 Duffin
6,231,879 B1 5/2001 Li et al.
6,232,130 B1 5/2001 Wolf
6,232,370 B1 5/2001 Kubota et al.
6,232,783 B1 5/2001 Merrill
6,233,080 B1 5/2001 Brenner et al.
6,233,471 B1 5/2001 Berner et al.
6,233,539 B1 5/2001 Brown
6,238,813 B1 5/2001 Maile et al.
6,239,161 B1 5/2001 Tang et al.
6,239,925 B1 5/2001 Ardrey et al.
6,241,704 B1 6/2001 Peterson et al.
6,241,862 B1 6/2001 McAleer et al.
6,241,863 B1 6/2001 Monbouquette
6,246,330 B1 6/2001 Nielsen
6,246,992 B1 6/2001 Brown
6,248,065 B1 6/2001 Brown
6,248,067 B1 6/2001 Causey, III et al.
6,248,093 B1 6/2001 Moberg
6,251,260 B1 6/2001 Heller et al.
6,251,280 B1 6/2001 Dai et al.
6,252,032 B1 6/2001 Van Antwerp et al.
6,253,804 B1 7/2001 Safabash
6,254,586 B1 7/2001 Mann et al.
6,256,522 B1 7/2001 Schultz
6,256,643 B1 7/2001 Cork et al.
6,259,587 B1 7/2001 Sheldon et al.
6,259,937 B1 7/2001 Schulman et al.
6,260,022 B1 7/2001 Brown
6,264,825 B1 7/2001 Blackburn et al.
6,266,645 B1 7/2001 Simpson
6,267,724 B1 7/2001 Taylor
6,268,161 B1 7/2001 Han et al.
6,268,913 B1 7/2001 Rising
6,270,455 B1 8/2001 Brown
6,272,364 B1 8/2001 Kurnik
6,272,480 B1 8/2001 Tresp et al.
6,274,285 B1 8/2001 Gries et al.
6,274,686 B1 8/2001 Mosbach
6,275,717 B1 8/2001 Gross et al.
6,280,416 B1 8/2001 Van Antwerp et al.
6,280,587 B1 8/2001 Matsumoto
6,281,006 B1 8/2001 Heller et al.
6,282,179 B1 8/2001 Sherman
6,283,943 B1 9/2001 Dy et al.
6,284,126 B1 9/2001 Kurnik et al.
6,284,478 B1 9/2001 Heller et al.
6,285,897 B1 9/2001 Kilcoyne et al.
6,289,238 B1 9/2001 Besson et al.
6,293,925 B1 9/2001 Safabash et al.
6,294,281 B1 9/2001 Heller
6,295,463 B1 9/2001 Stenzler
6,295,506 B1 9/2001 Heinonen et al.
6,298,254 B2 10/2001 Tamada
6,299,578 B1 10/2001 Kurnik et al.
6,299,757 B1 10/2001 Feldman et al.
6,300,002 B1 10/2001 Webb et al.
6,301,499 B1 10/2001 Carlson et al.
6,302,855 B1 10/2001 Lav et al.
6,304,766 B1 10/2001 Colvin, Jr. et al.
6,306,104 B1 10/2001 Cunningham et al.
6,309,351 B1 10/2001 Kurnik et al.
6,309,384 B1 10/2001 Harrington et al.
6,309,526 B1 10/2001 Fujiwara et al.
6,309,884 B1 10/2001 Cooper et al.
6,310,110 B1 10/2001 Markowitz et al.
6,312,388 B1 11/2001 Marcovecchio et al.
6,315,721 B2 11/2001 Schulman et al.
6,315,738 B1 11/2001 Nishikawa et al.
6,319,540 B1 11/2001 Van Antwerp et al.
6,319,566 B1 11/2001 Polanyi et al.
6,320,357 B1 11/2001 Peters et al.
6,324,428 B1 11/2001 Weinberg et al.
6,325,978 B1 12/2001 Labuda et al.
6,325,979 B1 12/2001 Hahn et al.
6,326,160 B1 12/2001 Dunn et al.
6,329,161 B1 12/2001 Heller et al.
6,329,929 B1 12/2001 Weijand et al.
6,330,426 B2 12/2001 Brown et al.
6,330,464 B1 12/2001 Colvin, Jr. et al.
6,331,518 B2 12/2001 Hemm et al.
6,333,189 B1 12/2001 Holladay et al.
6,334,778 B1 1/2002 Brown
6,336,900 B1 1/2002 Alleckson et al.
6,338,790 B1 1/2002 Feldman et al.
6,340,421 B1 1/2002 Vachon et al.
6,340,588 B1 1/2002 Nova et al.
6,341,232 B1 1/2002 Conn et al.
6,343,225 B1 1/2002 Clark, Jr.
6,352,505 B1 3/2002 Bortz
6,356,774 B1 3/2002 Bernstein et al.
6,356,776 B1 3/2002 Berner et al.
6,358,237 B1 3/2002 Paukovits et al.
6,360,888 B1 3/2002 McIvor et al.
6,363,282 B1 3/2002 Nichols et al.
6,365,670 B1 4/2002 Fry
6,366,793 B1 4/2002 Bell et al.
6,366,794 B1 4/2002 Moussy et al.
6,368,141 B1 4/2002 Van Antwerp et al.
6,368,272 B1 4/2002 Porumbescu
6,368,274 B1 4/2002 Van Antwerp et al.
6,370,410 B2 4/2002 Kurnik et al.
6,370,941 B2 4/2002 Nakamura
6,377,894 B1 4/2002 Deweese et al.
6,379,301 B1 4/2002 Worthington et al.
6,379,317 B1 4/2002 Kintzig et al.
6,383,767 B1 5/2002 Polak
6,387,048 B1 5/2002 Schulman et al.
6,391,643 B1 5/2002 Chen et al.
6,393,318 B1 5/2002 Conn et al.
6,394,952 B1 5/2002 Anderson et al.
6,398,562 B1 6/2002 Butler et al.
6,398,727 B1 6/2002 Bui et al.
6,400,974 B1 6/2002 Lesho
6,402,689 B1 6/2002 Scarantino et al.
6,402,691 B1 6/2002 Peddicord et al.
6,405,066 B1 6/2002 Essenpreis et al.
6,406,066 B1 6/2002 Uegene
6,406,426 B1 6/2002 Reuss et al.

(56) **References Cited**

U.S. PATENT DOCUMENTS

6,409,674 B1 6/2002 Brockway et al.
6,413,393 B1 7/2002 Van Antwerp et al.
6,416,471 B1 7/2002 Kumar et al.
6,416,651 B1 7/2002 Millar
6,418,332 B1 7/2002 Mastrototaro et al.
6,418,346 B1 7/2002 Nelson et al.
6,424,847 B1 7/2002 Mastrototaro et al.
6,424,867 B1 7/2002 Snell et al.
6,427,088 B1 7/2002 Bowman, IV et al.
6,434,409 B1 8/2002 Pfeiffer et al.
6,438,414 B1 8/2002 Conn et al.
6,440,068 B1 8/2002 Brown et al.
6,441,747 B1 8/2002 Khair et al.
6,442,433 B1 8/2002 Linberg
6,442,637 B1 8/2002 Hawkins et al.
6,443,942 B2 9/2002 Van Antwerp et al.
6,447,448 B1 9/2002 Ishikawa et al.
6,447,542 B1 9/2002 Weadock
6,454,710 B1 9/2002 Ballerstadt et al.
6,459,917 B1 10/2002 Gowda et al.
6,461,496 B1 10/2002 Feldman et al.
6,462,162 B2 10/2002 Van Antwerp et al.
6,464,687 B1 10/2002 Ishikawa et al.
6,464,848 B1 10/2002 Matsumoto
6,464,849 B1 10/2002 Say et al.
6,466,810 B1 10/2002 Ward et al.
6,468,222 B1 10/2002 Mault et al.
6,469,526 B1 10/2002 Franklin
6,471,645 B1 10/2002 Warkentin et al.
6,471,689 B1 10/2002 Joseph et al.
6,472,122 B1 10/2002 Schulman et al.
6,475,180 B2 11/2002 Peterson et al.
6,475,750 B1 11/2002 Han et al.
6,477,392 B1 11/2002 Honigs et al.
6,477,395 B2 11/2002 Schulman et al.
6,478,736 B1 11/2002 Mault
6,480,730 B2 11/2002 Darrow et al.
6,481,440 B2 11/2002 Gielen et al.
6,482,158 B2 11/2002 Mault
6,482,604 B2 11/2002 Kwon
6,484,045 B1 11/2002 Holker et al.
6,484,046 B1 11/2002 Say et al.
6,485,138 B1 11/2002 Kubota et al.
6,485,465 B2 11/2002 Moberg et al.
6,487,429 B2 11/2002 Hockersmith et al.
6,494,830 B1 12/2002 Wessel
6,496,728 B2 12/2002 Li et al.
6,498,043 B1 12/2002 Schulman et al.
6,498,941 B1 12/2002 Jackson
6,505,059 B1 1/2003 Kollias et al.
6,510,329 B2 1/2003 Heckel
6,512,939 B1 1/2003 Colvin et al.
6,513,532 B2 2/2003 Mault et al.
6,514,460 B1 2/2003 Fendrock
6,514,718 B2 2/2003 Heller et al.
6,515,593 B1 2/2003 Stark et al.
6,520,326 B2 2/2003 McIvor et al.
6,520,997 B1 2/2003 Pekkarinen et al.
6,526,298 B1 2/2003 Khalil et al.
6,527,729 B1 3/2003 Turcott
6,528,584 B2 3/2003 Kennedy et al.
6,529,755 B2 3/2003 Kurnik et al.
6,529,772 B2 3/2003 Carlson et al.
6,530,915 B1 3/2003 Eppstein et al.
6,534,322 B1 3/2003 Sabbadini
6,534,323 B1 3/2003 Sabbadini
6,534,711 B1 3/2003 Pollack
6,535,753 B1 3/2003 Raskas
6,537,243 B1 3/2003 Henning et al.
6,537,318 B1 3/2003 Ita et al.
6,540,675 B2 4/2003 Aceti et al.
6,541,107 B1 4/2003 Zhong et al.
6,544,212 B2 4/2003 Galley et al.
6,545,085 B2 4/2003 Kilgour et al.
6,546,268 B1 4/2003 Ishikawa et al.
6,546,269 B1 4/2003 Kurnik
6,547,839 B2 4/2003 Zhang et al.
6,549,796 B2 4/2003 Sohrab
6,551,276 B1 4/2003 Mann et al.
6,551,494 B1 4/2003 Heller et al.
6,551,496 B1 4/2003 Moles et al.
6,553,241 B2 4/2003 Mannheimer et al.
6,553,244 B2 4/2003 Lesho et al.
6,554,798 B1 4/2003 Mann et al.
6,558,320 B1 5/2003 Causey, III et al.
6,558,321 B1 5/2003 Burd et al.
6,558,351 B1 5/2003 Steil et al.
6,560,471 B1 5/2003 Heller et al.
6,561,978 B1 5/2003 Conn et al.
6,562,001 B2 5/2003 Lebel et al.
6,564,105 B2 5/2003 Starkweather et al.
6,565,509 B1 5/2003 Say et al.
6,569,309 B2 5/2003 Otsuka et al.
6,569,521 B1 5/2003 Sheridan et al.
6,571,128 B2 5/2003 Lebel et al.
6,571,200 B1 5/2003 Mault
6,572,545 B2 6/2003 Knobbe et al.
6,574,490 B2 6/2003 Abbink et al.
6,575,905 B2 6/2003 Knobbe et al.
6,576,101 B1 6/2003 Heller et al.
6,576,117 B1 6/2003 Iketaki et al.
6,577,893 B1 6/2003 Besson et al.
6,577,899 B2 6/2003 Lebel et al.
6,579,242 B2 6/2003 Bui et al.
6,579,498 B1 6/2003 Eglise
6,579,690 B1 6/2003 Bonnecaze et al.
6,584,335 B1 6/2003 Haar et al.
6,585,644 B2 7/2003 Lebel et al.
6,585,675 B1 7/2003 O'Mahony et al.
6,585,763 B1 7/2003 Keilman et al.
6,587,705 B1 7/2003 Kim et al.
6,588,644 B2 7/2003 Simon
6,589,205 B1 7/2003 Meadows
6,589,229 B1 7/2003 Connelly et al.
6,591,125 B1 7/2003 Buse et al.
6,591,126 B2 7/2003 Roeper et al.
6,594,514 B2 7/2003 Berner et al.
6,595,919 B2 7/2003 Berner et al.
6,595,929 B2 7/2003 Stivoric et al.
6,599,406 B1 7/2003 Kawanaka et al.
6,602,469 B1 8/2003 Maus et al.
6,602,678 B2 8/2003 Kwon et al.
6,602,909 B1 8/2003 Jarowski
6,605,072 B2 8/2003 Struys et al.
6,605,200 B1 8/2003 Mao et al.
6,605,201 B1 8/2003 Mao et al.
6,607,509 B2 8/2003 Bobroff et al.
6,607,658 B1 8/2003 Heller et al.
6,610,012 B2 8/2003 Mault
6,612,306 B1 9/2003 Mault
6,612,984 B1 9/2003 Kerr
6,613,379 B2 9/2003 Ward et al.
6,615,078 B1 9/2003 Burson et al.
6,616,819 B1 9/2003 Liamos et al.
6,618,603 B2 9/2003 Varalli et al.
6,618,934 B1 9/2003 Feldman et al.
6,620,106 B2 9/2003 Mault
6,627,058 B1 9/2003 Chan
6,629,776 B2 10/2003 Bell et al.
6,629,934 B2 10/2003 Mault et al.
6,633,772 B2 10/2003 Ford et al.
6,635,014 B2 10/2003 Starkweather et al.
6,635,167 B1 10/2003 Batman et al.
6,638,772 B1 10/2003 Douglas et al.
6,641,533 B2 11/2003 Causey, III et al.
6,642,015 B2 11/2003 Vachon et al.
6,644,321 B1 11/2003 Behm
6,645,142 B2 11/2003 Braig et al.
6,645,181 B1 11/2003 Lavi et al.
6,648,821 B2 11/2003 Lebel et al.
6,653,091 B1 11/2003 Dunn et al.
6,654,625 B1 11/2003 Say et al.
6,659,948 B2 12/2003 Lebel et al.
6,668,196 B1 12/2003 Villegas et al.

(56) **References Cited**

U.S. PATENT DOCUMENTS

6,671,554 B2 12/2003 Gibson et al.
6,673,596 B1 1/2004 Sayler et al.
6,673,625 B2 1/2004 Satcher, Jr. et al.
6,682,938 B1 1/2004 Satcher, Jr. et al.
6,683,040 B2 1/2004 Bragulla et al.
6,683,535 B1 1/2004 Utke
6,687,522 B2 2/2004 Tamada
6,687,546 B2 2/2004 Lebel et al.
6,689,056 B1 2/2004 Kilcoyne et al.
6,689,091 B2 2/2004 Bui et al.
6,689,265 B2 2/2004 Heller et al.
6,693,069 B2 2/2004 Korber et al.
6,694,158 B2 2/2004 Polak
6,694,191 B2 2/2004 Starkweather et al.
6,695,860 B1 2/2004 Ward et al.
6,699,218 B2 3/2004 Flaherty et al.
6,699,383 B2 3/2004 Lemire et al.
6,702,857 B2 3/2004 Brauker et al.
6,702,972 B1 3/2004 Markle
6,704,587 B1 3/2004 Kumar et al.
6,705,833 B2 3/2004 Tam et al.
6,708,049 B1 3/2004 Berson et al.
6,711,423 B2 3/2004 Colvin, Jr.
6,721,587 B2 4/2004 Gough
6,723,046 B2 4/2004 Lichtenstein et al.
6,728,560 B2 4/2004 Kollias et al.
6,730,200 B1 5/2004 Stewart et al.
6,731,976 B2 5/2004 Penn et al.
6,733,446 B2 5/2004 Lebel et al.
6,733,655 B1 5/2004 Davies et al.
6,734,162 B2 5/2004 Van Antwerp et al.
6,736,777 B2 5/2004 Kim et al.
6,737,401 B2 5/2004 Kim et al.
6,738,654 B2 5/2004 Sohrab
6,740,075 B2 5/2004 Lebel et al.
6,741,163 B1 5/2004 Roberts
6,741,876 B1 5/2004 Scecina et al.
6,741,877 B1 5/2004 Shults et al.
6,743,635 B2 6/2004 Neel et al.
6,749,587 B2 6/2004 Flaherty
6,750,311 B1 6/2004 Van Antwerp et al.
6,758,810 B2 7/2004 Lebel et al.
6,764,581 B1 7/2004 Forrow et al.
6,766,183 B2 7/2004 Walsh et al.
6,766,201 B2 7/2004 Von Arx et al.
6,768,425 B2 7/2004 Flaherty et al.
6,770,030 B1 8/2004 Schaupp et al.
6,770,729 B2 8/2004 Van Antwerp et al.
6,771,995 B2 8/2004 Kurnik et al.
6,773,563 B2 8/2004 Matsumoto
6,773,565 B2 8/2004 Kunimoto et al.
6,773,671 B1 8/2004 Lewis et al.
6,780,297 B2 8/2004 Matsumoto et al.
6,780,871 B2 8/2004 Glick et al.
6,784,274 B2 8/2004 Van Antwerp et al.
6,790,178 B1 9/2004 Mault et al.
6,793,802 B2 9/2004 Lee et al.
6,794,195 B2 9/2004 Colvin, Jr.
6,799,149 B2 9/2004 Hartlaub
6,800,451 B2 10/2004 Daniloff et al.
6,800,488 B2 10/2004 Khan et al.
6,801,041 B2 10/2004 Karinka et al.
6,801,420 B2 10/2004 Talbot et al.
6,802,957 B2 10/2004 Jung et al.
6,804,544 B2 10/2004 Van Antwerp et al.
6,809,507 B2 10/2004 Morgan et al.
6,809,653 B1 10/2004 Mann et al.
6,809,807 B1 10/2004 Erickson et al.
6,810,290 B2 10/2004 Lebel et al.
6,811,533 B2 11/2004 Lebel et al.
6,811,534 B2 11/2004 Bowman, IV et al.
6,811,659 B2 11/2004 Vachon
6,812,031 B1 11/2004 Carlsson
6,813,516 B2 11/2004 Ujhelyi et al.
6,813,519 B2 11/2004 Lebel et al.
6,814,843 B1 11/2004 Bhullar et al.
6,815,186 B2 11/2004 Clark, Jr.
6,816,742 B2 11/2004 Kim et al.
6,827,829 B2 12/2004 Kawanaka et al.
6,830,549 B2 12/2004 Bui et al.
6,835,553 B2 12/2004 Han et al.
RE38,681 E 1/2005 Kurnik et al.
6,837,858 B2 1/2005 Cunningham et al.
6,840,912 B2 1/2005 Kloepfer et al.
6,844,023 B2 1/2005 Schulman et al.
6,849,237 B2 2/2005 Housefield et al.
6,850,790 B2 2/2005 Berner et al.
6,852,500 B1 2/2005 Hoss et al.
6,852,694 B2 2/2005 Van Antwerp et al.
6,853,854 B1 2/2005 Proniewicz et al.
6,855,115 B2 2/2005 Fonseca et al.
6,856,928 B2 2/2005 Harmon
6,858,403 B2 2/2005 Han et al.
6,862,465 B2 3/2005 Shults et al.
6,862,466 B2 3/2005 Ackerman
6,867,051 B1 3/2005 Anderson et al.
6,869,413 B2 3/2005 Langley et al.
6,872,200 B2 3/2005 Mann et al.
6,873,268 B2 3/2005 Lebel et al.
6,875,386 B1 4/2005 Ward et al.
6,879,849 B2 4/2005 Begic
6,881,378 B1 4/2005 Zimmer et al.
6,881,551 B2 4/2005 Heller et al.
6,882,940 B2 4/2005 Potts et al.
6,885,883 B2 4/2005 Parris et al.
6,891,317 B2 5/2005 Pei et al.
6,892,085 B2 5/2005 McIvor et al.
6,893,552 B1 5/2005 Wang et al.
6,895,263 B2 5/2005 Shin et al.
6,899,683 B2 5/2005 Mault et al.
6,899,684 B2 5/2005 Mault et al.
6,902,905 B2 6/2005 Burson et al.
6,904,301 B2 6/2005 Raskas
6,907,127 B1 6/2005 Kravitz et al.
6,915,147 B2 7/2005 Lebel et al.
6,918,874 B1 7/2005 Hatch et al.
6,922,578 B2 7/2005 Eppstein et al.
6,922,584 B2 7/2005 Wang et al.
RE38,775 E 8/2005 Kurnik et al.
6,923,764 B2 8/2005 Aceti et al.
6,923,936 B2 8/2005 Swanson et al.
6,925,317 B1 8/2005 Samuels et al.
6,925,393 B1 8/2005 Kalatz et al.
6,927,246 B2 8/2005 Noronha et al.
6,931,327 B2 8/2005 Goode, Jr. et al.
6,932,084 B2 8/2005 Estes et al.
6,932,894 B2 8/2005 Mao et al.
6,936,006 B2 8/2005 Sabra
6,936,029 B2 8/2005 Mann et al.
6,940,590 B2 9/2005 Colvin, Jr. et al.
6,941,163 B2 9/2005 Ford et al.
6,946,299 B2 9/2005 Neel et al.
6,946,996 B2 9/2005 Koyama
6,949,816 B2 9/2005 Brown et al.
6,950,708 B2 9/2005 Bowman, IV et al.
6,951,631 B1 10/2005 Catt et al.
6,952,603 B2 10/2005 Gerber et al.
6,952,604 B2 10/2005 DeNuzzio et al.
6,953,693 B2 10/2005 Neel et al.
6,954,673 B2 10/2005 Von Arx et al.
6,955,650 B2 10/2005 Mault et al.
6,957,102 B2 10/2005 Silver et al.
6,957,107 B2 10/2005 Rogers et al.
6,958,691 B1 10/2005 Anderson et al.
6,958,705 B2 10/2005 Lebel et al.
6,959,247 B2 10/2005 Neel et al.
6,964,871 B2 11/2005 Bell et al.
6,965,791 B1 11/2005 Hitchcock et al.
6,968,294 B2 11/2005 Gutta et al.
6,968,375 B1 11/2005 Brown
6,972,080 B1 12/2005 Tomioka et al.
6,973,706 B2 12/2005 Say et al.
6,974,437 B2 12/2005 Lebel et al.
6,978,182 B2 12/2005 Mazar et al.

(56) **References Cited**

U.S. PATENT DOCUMENTS

6,979,326	B2	12/2005	Mann et al.
6,990,366	B2	1/2006	Say et al.
6,991,096	B2	1/2006	Gottlieb et al.
6,997,907	B2	2/2006	Safabash et al.
6,997,920	B2	2/2006	Mann et al.
6,998,247	B2	2/2006	Monfre et al.
6,999,810	B2	2/2006	Berner et al.
7,003,336	B2	2/2006	Holker et al.
7,003,341	B2	2/2006	Say et al.
7,004,901	B2	2/2006	Fish
7,005,048	B1	2/2006	Watanabe et al.
7,005,857	B2	2/2006	Stiene et al.
7,011,630	B2	3/2006	Desai et al.
7,016,721	B2	3/2006	Lee et al.
7,018,366	B2	3/2006	Easter
7,018,568	B2	3/2006	Tierney
7,022,072	B2	4/2006	Fox et al.
7,024,236	B2	4/2006	Ford et al.
7,024,245	B2	4/2006	Lebel et al.
7,025,743	B2	4/2006	Mann et al.
7,029,444	B2	4/2006	Shin et al.
7,034,677	B2	4/2006	Steinthal et al.
7,039,810	B1	5/2006	Nichols
7,041,057	B1	5/2006	Faupel et al.
7,041,468	B2	5/2006	Drucker et al.
7,045,054	B1	5/2006	Buck et al.
7,049,277	B2	5/2006	Bagulla et al.
7,052,472	B1	5/2006	Miller et al.
7,052,483	B2	5/2006	Wojcik
7,056,302	B2	6/2006	Douglas
7,058,437	B2	6/2006	Buse et al.
7,060,059	B2	6/2006	Keith et al.
7,070,580	B2	7/2006	Nielsen
7,072,718	B2	7/2006	VonArx et al.
7,072,802	B2	7/2006	Hartlaub
7,074,307	B2	7/2006	Simpson et al.
7,077,328	B2	7/2006	Krishnaswamy et al.
7,081,195	B2	7/2006	Simpson et al.
7,082,334	B2	7/2006	Boute et al.
7,098,803	B2	8/2006	Mann et al.
7,108,778	B2	9/2006	Simpson et al.
7,109,878	B2	9/2006	Mann et al.
7,110,803	B2	9/2006	Shults et al.
7,112,265	B1	9/2006	McAleer et al.
7,113,821	B1	9/2006	Sun et al.
7,115,884	B1	10/2006	Walt et al.
7,133,710	B2	11/2006	Acosta et al.
7,134,999	B2	11/2006	Brauker et al.
7,135,100	B1	11/2006	Lau et al.
7,136,689	B2	11/2006	Shults et al.
7,137,964	B2	11/2006	Flaherty
7,150,975	B2	12/2006	Tamada et al.
7,153,265	B2	12/2006	Vachon
7,160,251	B2	1/2007	Neel et al.
7,160,678	B1	1/2007	Kayyem et al.
7,163,511	B2	1/2007	Conn et al.
7,166,074	B2	1/2007	Reghabit et al.
7,169,289	B2	1/2007	Shulein et al.
7,171,274	B2	1/2007	Starkweather et al.
7,177,690	B2	2/2007	Woods et al.
7,183,068	B2	2/2007	Burson et al.
7,183,102	B2	2/2007	Monfre et al.
7,187,528	B2	3/2007	Talbot et al.
7,189,341	B2	3/2007	Li et al.
7,190,988	B2	3/2007	Say et al.
7,192,450	B2	3/2007	Brauker et al.
7,198,606	B2	4/2007	Boecker et al.
7,203,549	B2	4/2007	Schommer et al.
7,207,974	B2	4/2007	Safabash et al.
7,215,991	B2	5/2007	Besson et al.
7,218,890	B1	5/2007	Iseli et al.
7,225,535	B2	6/2007	Feldman et al.
7,226,978	B2	6/2007	Tapsak et al.
7,228,163	B2	6/2007	Ackerman
7,233,817	B2	6/2007	Yen
7,241,265	B2	7/2007	Cummings et al.
7,248,912	B2	7/2007	Gough et al.
7,248,929	B2	7/2007	Meadows et al.
7,261,691	B1	8/2007	Asomani
7,267,665	B2	9/2007	Steil et al.
7,276,029	B2	10/2007	Goode, Jr. et al.
7,278,983	B2	10/2007	Ireland et al.
7,295,867	B2	11/2007	Berner et al.
7,299,082	B2	11/2007	Feldman et al.
7,310,544	B2	12/2007	Brister et al.
7,318,816	B2	1/2008	Bobroff et al.
7,324,012	B2	1/2008	Mann et al.
7,329,239	B2	2/2008	Safabash et al.
7,344,499	B1	3/2008	Prausnitz et al.
7,347,973	B2	3/2008	Douglas et al.
7,354,420	B2	4/2008	Steil et al.
7,364,592	B2	4/2008	Carr-Brendel et al.
7,366,556	B2	4/2008	Brister et al.
7,379,765	B2	5/2008	Petisce et al.
7,384,396	B2	6/2008	Samuels et al.
7,399,277	B2	7/2008	Saidara et al.
7,402,153	B2	7/2008	Steil et al.
7,406,105	B2	7/2008	DelMain et al.
7,417,164	B2	8/2008	Suri
7,418,285	B2	8/2008	Ghesquiere et al.
7,424,318	B2	9/2008	Brister et al.
7,426,408	B2	9/2008	DeNuzzio et al.
7,433,727	B2	10/2008	Ward et al.
7,460,898	B2	12/2008	Brister et al.
7,467,003	B2	12/2008	Brister et al.
7,467,065	B2	12/2008	Neel et al.
7,471,972	B2	12/2008	Rhodes et al.
7,494,465	B2	2/2009	Brister et al.
7,497,827	B2	3/2009	Brister et al.
7,519,408	B2	4/2009	Rasdal et al.
7,519,478	B2	4/2009	Bartkowiak et al.
7,523,004	B2	4/2009	Bartkowiak et al.
7,525,298	B2	4/2009	Morgan et al.
7,545,272	B2	6/2009	Goodnow et al.
7,547,281	B2	6/2009	Hayes et al.
7,583,990	B2	9/2009	Goode, Jr. et al.
7,587,287	B2	9/2009	Connolly et al.
7,591,801	B2	9/2009	Brauker et al.
7,599,726	B2	10/2009	Goode, Jr. et al.
7,613,491	B2	11/2009	Boock et al.
7,615,007	B2	11/2009	Shults et al.
7,618,369	B2	11/2009	Hayter et al.
7,624,028	B1	11/2009	Brown
7,632,228	B2	12/2009	Brauker et al.
7,637,868	B2	12/2009	Saint et al.
7,640,048	B2	12/2009	Dobbles et al.
7,651,596	B2	1/2010	Petisce et al.
7,654,956	B2	2/2010	Brister et al.
7,657,297	B2	2/2010	Simpson et al.
7,689,437	B1	3/2010	Teller et al.
7,711,402	B2	5/2010	Shults et al.
7,713,574	B2	5/2010	Brister et al.
7,715,893	B2	5/2010	Kamath et al.
7,729,737	B2	6/2010	Ward
7,761,130	B2	7/2010	Simpson et al.
7,767,149	B2	8/2010	Maus et al.
7,771,352	B2	8/2010	Shults et al.
7,774,145	B2	8/2010	Brauker et al.
7,775,975	B2	8/2010	Brister et al.
7,778,680	B2	8/2010	Goode, Jr. et al.
7,783,333	B2	8/2010	Brister et al.
7,792,562	B2	9/2010	Shults et al.
7,797,028	B2	9/2010	Goode, Jr. et al.
7,819,161	B2	10/2010	Neel et al.
7,826,981	B2	11/2010	Goode, Jr. et al.
7,828,728	B2	11/2010	Boock et al.
7,831,287	B2	11/2010	Brister et al.
7,835,777	B2	11/2010	Shults et al.
7,857,760	B2	12/2010	Brister et al.
7,860,545	B2	12/2010	Shults et al.
7,875,293	B2	1/2011	Shults et al.
7,875,461	B2	1/2011	Docherty et al.
7,881,763	B2	2/2011	Brauker et al.
7,883,015	B2	2/2011	Ackermann et al.

(56) **References Cited**

U.S. PATENT DOCUMENTS

7,885,697 B2 2/2011 Brister et al.
7,896,809 B2 3/2011 Simpson et al.
7,899,511 B2 3/2011 Shults et al.
7,899,545 B2 3/2011 John
7,901,354 B2 3/2011 Shults et al.
7,901,394 B2 3/2011 Ireland et al.
7,914,450 B2 3/2011 Goode et al.
7,914,460 B2 3/2011 Melker et al.
7,920,906 B2 4/2011 Goode et al.
7,920,907 B2 4/2011 McGarraugh et al.
7,925,321 B2 4/2011 Goode et al.
7,933,639 B2 4/2011 Goode et al.
7,955,261 B2 6/2011 Goode et al.
7,955,856 B2 6/2011 Neel et al.
7,959,569 B2 6/2011 Goode et al.
7,970,449 B2 6/2011 Ward
7,979,104 B2 7/2011 Kamath et al.
7,986,986 B2 7/2011 Goode et al.
8,029,735 B2 10/2011 Schell
8,106,780 B2 1/2012 Goodnow et al.
8,140,294 B2 3/2012 Ramey et al.
8,160,669 B2 4/2012 Brauker et al.
8,160,670 B2 4/2012 Ouyang et al.
8,192,394 B2 6/2012 Estes et al.
8,260,392 B2 9/2012 Say et al.
8,346,335 B2 1/2013 Harper et al.
8,346,337 B2 1/2013 Heller et al.
8,465,425 B2 * 6/2013 Heller et al. 600/365
8,688,188 B2 4/2014 Heller et al.
2001/0011224 A1 8/2001 Brown
2001/0016310 A1 8/2001 Brown et al.
2001/0016682 A1 8/2001 Berner et al.
2001/0016683 A1 8/2001 Darrow et al.
2001/0020124 A1 9/2001 Tamada
2001/0029340 A1 10/2001 Mault et al.
2001/0032278 A1 10/2001 Brown et al.
2001/0037060 A1 11/2001 Thompson et al.
2001/0037069 A1 11/2001 Carlson et al.
2001/0039504 A1 11/2001 Linberg et al.
2001/0041830 A1 11/2001 Varalli et al.
2001/0044581 A1 11/2001 Mault
2001/0044588 A1 11/2001 Mault
2001/0047125 A1 11/2001 Quy
2001/0049096 A1 12/2001 Brown
2001/0049470 A1 12/2001 Mault et al.
2001/0051768 A1 12/2001 Schulman et al.
2001/0056328 A1 12/2001 Trippel et al.
2002/0002326 A1 1/2002 Causey, III et al.
2002/0002328 A1 1/2002 Tamada
2002/0004640 A1 1/2002 Conn et al.
2002/0009810 A1 1/2002 O'Connor et al.
2002/0010414 A1 1/2002 Coston et al.
2002/0016530 A1 2/2002 Brown
2002/0016535 A1 2/2002 Martin et al.
2002/0019022 A1 2/2002 Dunn et al.
2002/0019330 A1 2/2002 Murray et al.
2002/0019586 A1 2/2002 Teller et al.
2002/0019748 A1 2/2002 Brown
2002/0022883 A1 2/2002 Burg
2002/0023852 A1 2/2002 McIvor et al.
2002/0026111 A1 2/2002 Ackerman
2002/0026937 A1 3/2002 Mault
2002/0027164 A1 3/2002 Mault et al.
2002/0028995 A1 3/2002 Mault
2002/0040208 A1 4/2002 Flaherty et al.
2002/0042090 A1 4/2002 Heller et al.
2002/0042561 A1 4/2002 Schulman et al.
2002/0043471 A1 4/2002 Ikeda et al.
2002/0045808 A1 4/2002 Ford et al.
2002/0047867 A1 4/2002 Mault et al.
2002/0049482 A1 4/2002 Fabian et al.
2002/0053637 A1 5/2002 Conn et al.
2002/0055673 A1 5/2002 Van Antwerp et al.
2002/0062069 A1 5/2002 Mault
2002/0063060 A1 5/2002 Gascoyne et al.
2002/0065453 A1 5/2002 Lesho et al.
2002/0068858 A1 6/2002 Braig et al.
2002/0068860 A1 6/2002 Clark, Jr.
2002/0072858 A1 6/2002 Cheng
2002/0077765 A1 6/2002 Mault
2002/0077766 A1 6/2002 Mault
2002/0081559 A1 6/2002 Brown et al.
2002/0083461 A1 6/2002 Hutcheson et al.
2002/0084196 A1 7/2002 Liamos et al.
2002/0087056 A1 7/2002 Aceti et al.
2002/0091312 A1 7/2002 Berner et al.
2002/0099282 A1 7/2002 Knobbe et al.
2002/0099997 A1 7/2002 Piret
2002/0103425 A1 8/2002 Mault
2002/0107433 A1 8/2002 Mault
2002/0107476 A1 8/2002 Mann et al.
2002/0109600 A1 8/2002 Mault et al.
2002/0109621 A1 8/2002 Khair et al.
2002/0111547 A1 8/2002 Knobbe et al.
2002/0119711 A1 8/2002 Van Antwerp et al.
2002/0124017 A1 9/2002 Mault
2002/0128594 A1 9/2002 Das et al.
2002/0130042 A1 9/2002 Moerman et al.
2002/0133378 A1 9/2002 Mault et al.
2002/0151796 A1 10/2002 Koulik
2002/0151816 A1 10/2002 Rich et al.
2002/0155615 A1 10/2002 Novikov et al.
2002/0161286 A1 10/2002 Gerber et al.
2002/0161288 A1 10/2002 Shin et al.
2002/0169369 A1 11/2002 Ward et al.
2002/0177764 A1 11/2002 Sohrab
2002/0182241 A1 12/2002 Boerenstein et al.
2002/0188185 A1 12/2002 Sohrab
2002/0188216 A1 12/2002 Kayyali et al.
2002/0193885 A1 12/2002 Legeay et al.
2002/0198513 A1 12/2002 Lebel et al.
2003/0004457 A1 1/2003 Andersson
2003/0006669 A1 1/2003 Pei et al.
2003/0023171 A1 1/2003 Sato et al.
2003/0023182 A1 1/2003 Mault et al.
2003/0023317 A1 1/2003 Brauker et al.
2003/0028089 A1 2/2003 Galley et al.
2003/0028120 A1 2/2003 Mault et al.
2003/0032077 A1 2/2003 Itoh et al.
2003/0032867 A1 2/2003 Crothall et al.
2003/0032868 A1 2/2003 Graskov et al.
2003/0032874 A1 2/2003 Rhodes et al.
2003/0036773 A1 2/2003 Whitehurst et al.
2003/0040683 A1 2/2003 Rule et al.
2003/0042137 A1 3/2003 Mao et al.
2003/0050537 A1 3/2003 Wessel
2003/0050546 A1 3/2003 Desai et al.
2003/0059631 A1 3/2003 Al-Lamee
2003/0065254 A1 4/2003 Schulman et al.
2003/0065257 A1 4/2003 Mault et al.
2003/0065273 A1 4/2003 Mault et al.
2003/0065274 A1 4/2003 Mault et al.
2003/0065275 A1 4/2003 Mault et al.
2003/0065308 A1 4/2003 Lebel et al.
2003/0070548 A1 4/2003 Clausen
2003/0076082 A1 4/2003 Morgan et al.
2003/0078481 A1 4/2003 McIvor et al.
2003/0078560 A1 4/2003 Miller et al.
2003/0097082 A1 5/2003 Purdy et al.
2003/0100040 A1 5/2003 Bonnecaze et al.
2003/0100821 A1 5/2003 Heller et al.
2003/0105407 A1 6/2003 Pearce et al.
2003/0108976 A1 6/2003 Braig et al.
2003/0117296 A1 6/2003 Seeley
2003/0125612 A1 7/2003 Fox et al.
2003/0125613 A1 7/2003 Enegren et al.
2003/0130616 A1 7/2003 Steil et al.
2003/0134347 A1 7/2003 Heller et al.
2003/0135100 A1 7/2003 Kim et al.
2003/0135333 A1 7/2003 Aceti et al.
2003/0138674 A1 7/2003 Zeikus et al.
2003/0153820 A1 8/2003 Berner et al.
2003/0153821 A1 8/2003 Berner et al.
2003/0158472 A1 8/2003 Sohrab

(56) **References Cited**

U.S. PATENT DOCUMENTS

2003/0158707 A1 8/2003 Doi
2003/0168338 A1 9/2003 Gao et al.
2003/0175806 A1 9/2003 Rule et al.
2003/0176183 A1 9/2003 Drucker et al.
2003/0176933 A1 9/2003 Lebel et al.
2003/0181794 A1 9/2003 Rini et al.
2003/0181851 A1 9/2003 Mann et al.
2003/0181852 A1 9/2003 Mann et al.
2003/0187338 A1 10/2003 Say et al.
2003/0187525 A1 10/2003 Mann et al.
2003/0188427 A1 10/2003 Say et al.
2003/0191376 A1 10/2003 Samuels et al.
2003/0191431 A1 10/2003 Mann et al.
2003/0195403 A1 10/2003 Berner et al.
2003/0195462 A1 10/2003 Mann et al.
2003/0199744 A1 10/2003 Buse et al.
2003/0199791 A1 10/2003 Boecker et al.
2003/0199903 A1 10/2003 Boecker et al.
2003/0208110 A1 11/2003 Mault et al.
2003/0208113 A1 11/2003 Mault et al.
2003/0208133 A1 11/2003 Mault
2003/0208409 A1 11/2003 Mault
2003/0211625 A1 11/2003 Cohan
2003/0212317 A1 11/2003 Kovatchev et al.
2003/0212346 A1 11/2003 Yuzhakov et al.
2003/0212347 A1 11/2003 Sohrab
2003/0212364 A1 11/2003 Mann et al.
2003/0212379 A1 11/2003 Bylund et al.
2003/0217966 A1 11/2003 Tapsak et al.
2003/0224729 A1 12/2003 Arnold
2003/0225437 A1 12/2003 Ferguson
2003/0226695 A1 12/2003 Mault
2003/0229514 A2 12/2003 Brown
2003/0232370 A1 12/2003 Trifiro
2003/0235817 A1 12/2003 Bartkowiak et al.
2004/0010207 A1 1/2004 Flaherty et al.
2004/0011671 A1 1/2004 Shults et al.
2004/0015063 A1 1/2004 DeNuzzio et al.
2004/0015134 A1 1/2004 Lavi et al.
2004/0018486 A1 1/2004 Dunn et al.
2004/0024327 A1 2/2004 Brodnick
2004/0030285 A1 2/2004 Lavi et al.
2004/0030294 A1 2/2004 Mahurkar
2004/0039256 A1 2/2004 Kawatahara et al.
2004/0039298 A1 2/2004 Abreu
2004/0039406 A1 2/2004 Jessen
2004/0040840 A1 3/2004 Mao et al.
2004/0045879 A1 3/2004 Shults et al.
2004/0054263 A1 3/2004 Moerman et al.
2004/0059201 A1 3/2004 Ginsberg
2004/0068230 A1 4/2004 Estes et al.
2004/0069164 A1 4/2004 Nakamura et al.
2004/0072357 A1 4/2004 Stiene et al.
2004/0073095 A1 4/2004 Causey, III et al.
2004/0074785 A1 4/2004 Holker
2004/0078219 A1 4/2004 Kaylor
2004/0096959 A1 5/2004 Stiene et al.
2004/0106857 A1 6/2004 Gough
2004/0106858 A1 6/2004 Say et al.
2004/0106859 A1 6/2004 Say et al.
2004/0108226 A1 6/2004 Polychronakos et al.
2004/0118704 A1 6/2004 Wang et al.
2004/0122353 A1 6/2004 Shahmirian et al.
2004/0122489 A1 6/2004 Mazar et al.
2004/0133131 A1 7/2004 Kuhn et al.
2004/0133164 A1 7/2004 Funderburk et al.
2004/0138588 A1 7/2004 Saikley et al.
2004/0143173 A1 7/2004 Reghabi et al.
2004/0152187 A1 8/2004 Haight et al.
2004/0152622 A1 8/2004 Keith et al.
2004/0153585 A1 8/2004 Kawatahara et al.
2004/0162473 A1 8/2004 Sohrab
2004/0164961 A1 8/2004 Bal et al.
2004/0167383 A1 8/2004 Kim et al.
2004/0167801 A1 8/2004 Say et al.
2004/0171921 A1 9/2004 Say et al.
2004/0172284 A1 9/2004 Sullivan et al.
2004/0173472 A1 9/2004 Jung et al.
2004/0176913 A1 9/2004 Kawatahara et al.
2004/0186362 A1 9/2004 Brauker et al.
2004/0186365 A1 9/2004 Jin et al.
2004/0193025 A1 9/2004 Steil et al.
2004/0193090 A1 9/2004 Lebel et al.
2004/0199059 A1 10/2004 Brauker et al.
2004/0202576 A1 10/2004 Aceti et al.
2004/0204687 A1 10/2004 Mogensen et al.
2004/0219664 A1 11/2004 Heller et al.
2004/0225338 A1 11/2004 Lebel et al.
2004/0236200 A1 11/2004 Say et al.
2004/0236251 A1 11/2004 Roe et al.
2004/0248204 A1 12/2004 Moerman
2004/0249250 A1 12/2004 McGee et al.
2004/0249253 A1 12/2004 Racchini et al.
2004/0249254 A1 12/2004 Racchini et al.
2004/0249999 A1 12/2004 Connolly et al.
2004/0253736 A1 12/2004 Stout et al.
2004/0254429 A1 12/2004 Yang
2004/0254433 A1 12/2004 Bandis et al.
2004/0254434 A1 12/2004 Goodnow et al.
2004/0260363 A1 12/2004 Von Arx et al.
2004/0263354 A1 12/2004 Mann et al.
2005/0003470 A1 1/2005 Nelson et al.
2005/0004439 A1 1/2005 Shin et al.
2005/0006122 A1 1/2005 Burnette
2005/0010087 A1 1/2005 Banet et al.
2005/0010265 A1 1/2005 Baru Fassio et al.
2005/0010269 A1 1/2005 Lebel et al.
2005/0027177 A1 2/2005 Shin et al.
2005/0027179 A1 2/2005 Berner et al.
2005/0027180 A1 2/2005 Goode, Jr. et al.
2005/0027181 A1 2/2005 Goode, Jr. et al.
2005/0027182 A1 2/2005 Siddiqui et al.
2005/0027462 A1 2/2005 Goode, Jr. et al.
2005/0027463 A1 2/2005 Goode, Jr. et al.
2005/0031689 A1 2/2005 Shults et al.
2005/0033132 A1 2/2005 Shults et al.
2005/0038332 A1 2/2005 Saidara et al.
2005/0038680 A1 2/2005 McMahon
2005/0043598 A1 2/2005 Goode, Jr. et al.
2005/0043894 A1 2/2005 Fernandez
2005/0049473 A1 3/2005 Desai et al.
2005/0051427 A1 3/2005 Brauker et al.
2005/0051440 A1 3/2005 Simpson et al.
2005/0054909 A1 3/2005 Petisce et al.
2005/0056551 A1 3/2005 White et al.
2005/0056552 A1 3/2005 Simpson et al.
2005/0090607 A1 4/2005 Tapsak et al.
2005/0096519 A1 5/2005 DeNuzzio et al.
2005/0101847 A1 5/2005 Routt et al.
2005/0103625 A1 5/2005 Rhodes et al.
2005/0112169 A1 5/2005 Brauker et al.
2005/0113653 A1 5/2005 Fox et al.
2005/0113657 A1 5/2005 Alarcon et al.
2005/0113658 A1 5/2005 Jacobson et al.
2005/0115832 A1 6/2005 Simpson et al.
2005/0118726 A1 6/2005 Schultz et al.
2005/0121322 A1 6/2005 Say et al.
2005/0124873 A1 6/2005 Shults et al.
2005/0131346 A1 6/2005 Douglas
2005/0133368 A1 6/2005 Davies et al.
2005/0137471 A1 6/2005 Haar et al.
2005/0139489 A1 6/2005 Davies et al.
2005/0143635 A1 6/2005 Kamath et al.
2005/0143636 A1 6/2005 Zhang et al.
2005/0143675 A1 6/2005 Neel et al.
2005/0148003 A1 7/2005 Kieth et al.
2005/0154271 A1 7/2005 Rasdal et al.
2005/0161346 A1 7/2005 Simpson et al.
2005/0171503 A1 8/2005 Van Den Berghe et al.
2005/0171513 A1 8/2005 Mann et al.
2005/0173245 A1 8/2005 Feldman et al.
2005/0176136 A1 8/2005 Burd et al.
2005/0177036 A1 8/2005 Shults et al.
2005/0181012 A1 8/2005 Saint et al.

(56) **References Cited**

U.S. PATENT DOCUMENTS

2005/0182306	A1	8/2005	Sloan et al.
2005/0182451	A1	8/2005	Griffin et al.
2005/0183954	A1	8/2005	Hitchcock et al.
2005/0187720	A1	8/2005	Goode, Jr. et al.
2005/0192557	A1	9/2005	Brauker et al.
2005/0195930	A1	9/2005	Spital et al.
2005/0199494	A1	9/2005	Say et al.
2005/0203360	A1	9/2005	Brauker et al.
2005/0203707	A1	9/2005	Tsutsui et al.
2005/0211571	A1	9/2005	Schulein et al.
2005/0214892	A1	9/2005	Kovatchev et al.
2005/0215871	A1	9/2005	Feldman et al.
2005/0215872	A1	9/2005	Berner et al.
2005/0239154	A1	10/2005	Feldman et al.
2005/0239156	A1	10/2005	Drucker et al.
2005/0242479	A1	11/2005	Petisce et al.
2005/0245795	A1	11/2005	Goode, Jr. et al.
2005/0245799	A1	11/2005	Brauker et al.
2005/0251083	A1	11/2005	Carr-Brendel et al.
2005/0261563	A1	11/2005	Zhou et al.
2005/0261660	A1	11/2005	Choi
2005/0267780	A1	12/2005	Ray et al.
2005/0271546	A1	12/2005	Gerber et al.
2005/0271547	A1	12/2005	Gerber et al.
2005/0272640	A1	12/2005	Doyle, III et al.
2005/0272985	A1	12/2005	Kotulla et al.
2005/0272989	A1	12/2005	Shah et al.
2005/0277164	A1	12/2005	Drucker et al.
2005/0287620	A1	12/2005	Heller et al.
2006/0001538	A1	1/2006	Kraft et al.
2006/0001550	A1	1/2006	Mann et al.
2006/0001551	A1	1/2006	Kraft et al.
2006/0003398	A1	1/2006	Heller et al.
2006/0004271	A1	1/2006	Peyser et al.
2006/0007017	A1	1/2006	Mann et al.
2006/0015020	A1	1/2006	Neale et al.
2006/0015024	A1	1/2006	Brister et al.
2006/0016700	A1	1/2006	Brister et al.
2006/0019327	A1	1/2006	Brister et al.
2006/0020186	A1	1/2006	Brister et al.
2006/0020187	A1	1/2006	Brister et al.
2006/0020188	A1	1/2006	Kamath et al.
2006/0020189	A1	1/2006	Brister et al.
2006/0020190	A1	1/2006	Kamath et al.
2006/0020191	A1	1/2006	Brister et al.
2006/0020192	A1	1/2006	Brister et al.
2006/0025663	A1	2/2006	Talbot et al.
2006/0031094	A1	2/2006	Cohen et al.
2006/0036139	A1	2/2006	Brister et al.
2006/0036140	A1	2/2006	Brister et al.
2006/0036141	A1	2/2006	Kamath et al.
2006/0036142	A1	2/2006	Brister et al.
2006/0036143	A1	2/2006	Brister et al.
2006/0036144	A1	2/2006	Brister et al.
2006/0036145	A1	2/2006	Brister et al.
2006/0036187	A1	2/2006	Vos et al.
2006/0040402	A1	2/2006	Brauker et al.
2006/0047215	A1	3/2006	Newman et al.
2006/0052679	A1	3/2006	Kotulla et al.
2006/0058602	A1	3/2006	Kwiatkowski et al.
2006/0063218	A1	3/2006	Bartkowiak et al.
2006/0068208	A1	3/2006	Tapsak et al.
2006/0074564	A1	4/2006	Bartowiak et al.
2006/0086624	A1	4/2006	Tapsak et al.
2006/0091006	A1	5/2006	Wang et al.
2006/0093556	A1	5/2006	Gonda et al.
2006/0100588	A1	5/2006	Brunnberg et al.
2006/0155180	A1	7/2006	Brister et al.
2006/0173406	A1	8/2006	Hayes et al.
2006/0173444	A1	8/2006	Choy et al.
2006/0183984	A1	8/2006	Dobbles et al.
2006/0183985	A1	8/2006	Brister et al.
2006/0189856	A1	8/2006	Petisce et al.
2006/0189863	A1	8/2006	Peyser et al.
2006/0195029	A1	8/2006	Shults et al.
2006/0198864	A1	9/2006	Shults et al.
2006/0200019	A1	9/2006	Petisce et al.
2006/0200020	A1	9/2006	Brister et al.
2006/0200022	A1	9/2006	Brauker et al.
2006/0211921	A1	9/2006	Brauker et al.
2006/0222566	A1	10/2006	Brauker et al.
2006/0224108	A1	10/2006	Brauker et al.
2006/0235285	A1	10/2006	Brister et al.
2006/0247985	A1	11/2006	Liamos et al.
2006/0258761	A1	11/2006	Boock et al.
2006/0258929	A1	11/2006	Goode, Jr. et al.
2006/0270922	A1	11/2006	Brauker et al.
2006/0270923	A1	11/2006	Brauker et al.
2007/0016381	A1	1/2007	Kamath et al.
2007/0017805	A1	1/2007	Hodges et al.
2007/0027381	A1	2/2007	Stafford
2007/0027384	A1	2/2007	Brister et al.
2007/0027385	A1	2/2007	Brister et al.
2007/0032706	A1	2/2007	Kamath et al.
2007/0032717	A1	2/2007	Brister et al.
2007/0032718	A1	2/2007	Shults et al.
2007/0038044	A1	2/2007	Dobbles et al.
2007/0045902	A1	3/2007	Brauker et al.
2007/0049873	A1	3/2007	Hansen et al.
2007/0060814	A1	3/2007	Stafford
2007/0066873	A1	3/2007	Kamath et al.
2007/0078320	A1	4/2007	Stafford
2007/0078321	A1	4/2007	Mazza et al.
2007/0089987	A1	4/2007	Neel et al.
2007/0093704	A1	4/2007	Brister et al.
2007/0106135	A1	5/2007	Sloan et al.
2007/0135696	A1	6/2007	Ward
2007/0149873	A1	6/2007	Say et al.
2007/0149874	A1	6/2007	Say et al.
2007/0151869	A1	7/2007	Heller et al.
2007/0156033	A1	7/2007	Causey, III et al.
2007/0161879	A1	7/2007	Say et al.
2007/0161880	A1	7/2007	Say et al.
2007/0163880	A1	7/2007	Woo et al.
2007/0173711	A1	7/2007	Shah et al.
2007/0179370	A1	8/2007	Say et al.
2007/0179372	A1	8/2007	Say et al.
2007/0191699	A1	8/2007	Say et al.
2007/0191700	A1	8/2007	Say et al.
2007/0197889	A1	8/2007	Brister et al.
2007/0197890	A1	8/2007	Boock et al.
2007/0200254	A1	8/2007	Curry
2007/0202672	A1	8/2007	Curry
2007/0203408	A1	8/2007	Say et al.
2007/0203410	A1	8/2007	Say et al.
2007/0203411	A1	8/2007	Say et al.
2007/0203966	A1	8/2007	Brauker et al.
2007/0208244	A1	9/2007	Brauker et al.
2007/0208245	A1	9/2007	Brauker et al.
2007/0208246	A1	9/2007	Brauker et al.
2007/0208247	A1	9/2007	Say et al.
2007/0213610	A1	9/2007	Say et al.
2007/0213611	A1	9/2007	Simpson et al.
2007/0215491	A1	9/2007	Heller et al.
2007/0218097	A1	9/2007	Heller et al.
2007/0232879	A1	10/2007	Brister et al.
2007/0235331	A1	10/2007	Simpson et al.
2007/0244380	A1	10/2007	Say et al.
2007/0249919	A1	10/2007	Say et al.
2007/0249920	A1	10/2007	Say et al.
2007/0249922	A1	10/2007	Peyser et al.
2007/0259217	A1	11/2007	Logan
2007/0270672	A1	11/2007	Hayter
2008/0021436	A1	1/2008	Wolpert et al.
2008/0021666	A1	1/2008	Goode, Jr. et al.
2008/0033254	A1	2/2008	Kamath et al.
2008/0033271	A1	2/2008	Say et al.
2008/0045824	A1	2/2008	Tapsak et al.
2008/0058625	A1	3/2008	McGarraugh et al.
2008/0058773	A1	3/2008	John
2008/0061961	A1	3/2008	John
2008/0064937	A1	3/2008	McGarraugh et al.
2008/0071156	A1	3/2008	Brister et al.
2008/0071157	A1	3/2008	McGarraugh et al.

(56) **References Cited**

U.S. PATENT DOCUMENTS

2008/0071158 A1 3/2008 McGarraugh et al.
2008/0076997 A1 3/2008 Peyser et al.
2008/0083617 A1 4/2008 Simpson et al.
2008/0086039 A1 4/2008 Heller et al.
2008/0086040 A1 4/2008 Heller et al.
2008/0086041 A1 4/2008 Heller et al.
2008/0086042 A1 4/2008 Brister et al.
2008/0086043 A1 4/2008 Heller et al.
2008/0086044 A1 4/2008 Brister et al.
2008/0086273 A1 4/2008 Shults et al.
2008/0091094 A1 4/2008 Heller et al.
2008/0091095 A1 4/2008 Heller et al.
2008/0091096 A1 4/2008 Say et al.
2008/0108942 A1 5/2008 Brister et al.
2008/0112852 A1 5/2008 Neel et al.
2008/0114228 A1 5/2008 McCluskey et al.
2008/0154101 A1 6/2008 Jain et al.
2008/0167543 A1 7/2008 Say et al.
2008/0183061 A1 7/2008 Goode, Jr. et al.
2008/0183399 A1 7/2008 Goode, Jr. et al.
2008/0187655 A1 8/2008 Markle et al.
2008/0188722 A1 8/2008 Markle et al.
2008/0188725 A1 8/2008 Markle et al.
2008/0188731 A1 8/2008 Brister et al.
2008/0189051 A1 8/2008 Goode, Jr. et al.
2008/0194935 A1 8/2008 Brister et al.
2008/0194936 A1 8/2008 Goode, Jr. et al.
2008/0194937 A1 8/2008 Goode, Jr. et al.
2008/0194938 A1 8/2008 Brister et al.
2008/0195232 A1 8/2008 Carr-Brendel et al.
2008/0195967 A1 8/2008 Goode, Jr. et al.
2008/0197024 A1 8/2008 Simpson et al.
2008/0200788 A1 8/2008 Brister et al.
2008/0200789 A1 8/2008 Brister et al.
2008/0200791 A1 8/2008 Simpson et al.
2008/0208025 A1 8/2008 Shults et al.
2008/0208026 A1 8/2008 Noujaim et al.
2008/0210557 A1 9/2008 Heller et al.
2008/0214914 A1 9/2008 Say et al.
2008/0214915 A1 9/2008 Brister et al.
2008/0214918 A1 9/2008 Brister et al.
2008/0228051 A1 9/2008 Shults et al.
2008/0228054 A1 9/2008 Shults et al.
2008/0242961 A1 10/2008 Brister et al.
2008/0249384 A1 10/2008 Skyggebjerg et al.
2008/0262329 A1 10/2008 Say et al.
2008/0262469 A1 10/2008 Brister et al.
2008/0269672 A1 10/2008 Say et al.
2008/0275313 A1 11/2008 Brister et al.
2008/0281178 A1 11/2008 Chuang et al.
2008/0281179 A1 11/2008 Fennell et al.
2008/0287764 A1 11/2008 Rasdal et al.
2008/0287765 A1 11/2008 Rasdal et al.
2008/0287766 A1 11/2008 Rasdal et al.
2008/0296155 A1 12/2008 Shults et al.
2008/0300572 A1 12/2008 Rankers et al.
2008/0305009 A1 12/2008 Gamsey et al.
2008/0305506 A1 12/2008 Suri
2008/0306368 A1 12/2008 Goode, Jr. et al.
2008/0306434 A1 12/2008 Dobbles et al.
2008/0306435 A1 12/2008 Kamath et al.
2008/0306444 A1 12/2008 Brister et al.
2008/0319292 A1 12/2008 Say et al.
2009/0011449 A1 1/2009 Karinka et al.
2009/0012379 A1 1/2009 Goode, Jr. et al.
2009/0018418 A1 1/2009 Markle et al.
2009/0018424 A1 1/2009 Kamath et al.
2009/0018426 A1 1/2009 Markle et al.
2009/0030294 A1 1/2009 Petisce et al.
2009/0030297 A1 1/2009 Miller et al.
2009/0036758 A1 2/2009 Brauker et al.
2009/0036763 A1 2/2009 Brauker et al.
2009/0043181 A1 2/2009 Brauker et al.
2009/0043182 A1 2/2009 Brauker et al.
2009/0043525 A1 2/2009 Brauker et al.
2009/0043541 A1 2/2009 Brauker et al.
2009/0043542 A1 2/2009 Brauker et al.
2009/0045055 A1 2/2009 Rhodes et al.
2009/0057148 A1 3/2009 Wieder et al.
2009/0061528 A1 3/2009 Suri
2009/0062633 A1 3/2009 Brauker et al.
2009/0062634 A1 3/2009 Say et al.
2009/0062635 A1 3/2009 Brauker et al.
2009/0069655 A1 3/2009 Say et al.
2009/0069656 A1 3/2009 Say et al.
2009/0069657 A1 3/2009 Say et al.
2009/0069658 A1 3/2009 Say et al.
2009/0076356 A1 3/2009 Simpson et al.
2009/0076360 A1 3/2009 Brister et al.
2009/0076361 A1 3/2009 Kamath et al.
2009/0081803 A1 3/2009 Gamsey et al.
2009/0089999 A1 4/2009 Say et al.
2009/0093696 A1 4/2009 Say et al.
2009/0099432 A1 4/2009 Say et al.
2009/0099434 A1 4/2009 Liu et al.
2009/0099435 A1 4/2009 Say et al.
2009/0099436 A1 4/2009 Brister et al.
2009/0124877 A1 5/2009 Goode, Jr. et al.
2009/0124878 A1 5/2009 Goode, Jr. et al.
2009/0124879 A1 5/2009 Brister et al.
2009/0124964 A1 5/2009 Leach et al.
2009/0131768 A1 5/2009 Simpson et al.
2009/0131769 A1 5/2009 Leach et al.
2009/0131776 A1 5/2009 Simpson et al.
2009/0131777 A1 5/2009 Simpson et al.
2009/0137886 A1 5/2009 Shariati et al.
2009/0137887 A1 5/2009 Shariati et al.
2009/0143659 A1 6/2009 Li et al.
2009/0143660 A1 6/2009 Brister et al.
2009/0156919 A1 6/2009 Brister et al.
2009/0156924 A1 6/2009 Shariati et al.
2009/0163781 A1 6/2009 Say et al.
2009/0163788 A1 6/2009 Say et al.
2009/0163789 A1 6/2009 Say et al.
2009/0163790 A1 6/2009 Brister et al.
2009/0163791 A1 6/2009 Brister et al.
2009/0171179 A1 7/2009 Say et al.
2009/0173628 A1 7/2009 Say et al.
2009/0177054 A1 7/2009 Say et al.
2009/0177055 A1 7/2009 Say et al.
2009/0177056 A1 7/2009 Say et al.
2009/0177057 A1 7/2009 Say et al.
2009/0177058 A1 7/2009 Say et al.
2009/0177059 A1 7/2009 Say et al.
2009/0177060 A1 7/2009 Say et al.
2009/0177061 A1 7/2009 Say et al.
2009/0177062 A1 7/2009 Say et al.
2009/0177063 A1 7/2009 Say et al.
2009/0177064 A1 7/2009 Say et al.
2009/0177065 A1 7/2009 Say et al.
2009/0177066 A1 7/2009 Say et al.
2009/0177143 A1 7/2009 Markle et al.
2009/0178459 A1 7/2009 Li et al.
2009/0182212 A1 7/2009 Say et al.
2009/0182213 A1 7/2009 Say et al.
2009/0182214 A1 7/2009 Say et al.
2009/0182215 A1 7/2009 Say et al.
2009/0182217 A1 7/2009 Li et al.
2009/0187088 A1 7/2009 Say et al.
2009/0187089 A1 7/2009 Say et al.
2009/0187090 A1 7/2009 Say et al.
2009/0187091 A1 7/2009 Say et al.
2009/0187092 A1 7/2009 Say et al.
2009/0187093 A1 7/2009 Say et al.
2009/0187094 A1 7/2009 Say et al.
2009/0187095 A1 7/2009 Say et al.
2009/0192366 A1 7/2009 Mensinger et al.
2009/0192368 A1 7/2009 Say et al.
2009/0192369 A1 7/2009 Say et al.
2009/0192370 A1 7/2009 Say et al.
2009/0192371 A1 7/2009 Say et al.
2009/0192372 A1 7/2009 Say et al.
2009/0192373 A1 7/2009 Say et al.
2009/0192374 A1 7/2009 Say et al.

(56) **References Cited**

U.S. PATENT DOCUMENTS

2009/0192375 A1 7/2009 Say et al.
2009/0192376 A1 7/2009 Say et al.
2009/0192377 A1 7/2009 Say et al.
2009/0192378 A1 7/2009 Say et al.
2009/0192379 A1 7/2009 Say et al.
2009/0192380 A1 7/2009 Shariati et al.
2009/0192722 A1 7/2009 Shariati et al.
2009/0192724 A1 7/2009 Brauker et al.
2009/0192745 A1 7/2009 Kamath et al.
2009/0192751 A1 7/2009 Kamath et al.
2009/0198115 A1 8/2009 Say et al.
2009/0198116 A1 8/2009 Say et al.
2009/0198175 A1 8/2009 Say et al.
2009/0203978 A1 8/2009 Say et al.
2009/0203981 A1 8/2009 Brauker et al.
2009/0204341 A1 8/2009 Brauker et al.
2009/0209838 A1 8/2009 Say et al.
2009/0216100 A1 8/2009 Ebner et al.
2009/0216101 A1 8/2009 Say et al.
2009/0216103 A1 8/2009 Brister et al.
2009/0227940 A1 9/2009 Say et al.
2009/0227941 A1 9/2009 Say et al.
2009/0228214 A1 9/2009 Say et al.
2009/0240120 A1 9/2009 Mensinger et al.
2009/0240128 A1 9/2009 Mensinger et al.
2009/0240193 A1 9/2009 Mensinger et al.
2009/0242399 A1 10/2009 Kamath et al.
2009/0242425 A1 10/2009 Kamath et al.
2009/0247855 A1 10/2009 Boock et al.
2009/0247856 A1 10/2009 Boock et al.
2009/0247857 A1 10/2009 Harper et al.
2009/0264719 A1 10/2009 Markle et al.
2009/0281406 A1 11/2009 McGarraugh et al.
2009/0287073 A1 11/2009 Boock et al.
2009/0287074 A1 11/2009 Shults et al.
2009/0299155 A1 12/2009 Yang et al.
2009/0299156 A1 12/2009 Simpson et al.
2009/0299162 A1 12/2009 Brauker et al.
2009/0299276 A1 12/2009 Brauker et al.
2010/0010324 A1 1/2010 Brauker et al.
2010/0010331 A1 1/2010 Brauker et al.
2010/0010332 A1 1/2010 Brauker et al.
2010/0016687 A1 1/2010 Brauker et al.
2010/0016698 A1 1/2010 Rasdal et al.
2010/0022855 A1 1/2010 Brauker et al.
2010/0030038 A1 2/2010 Brauker et al.
2010/0030053 A1 2/2010 Goode, Jr. et al.
2010/0030484 A1 2/2010 Brauker et al.
2010/0030485 A1 2/2010 Brauker et al.
2010/0036215 A1 2/2010 Goode, Jr. et al.
2010/0036216 A1 2/2010 Goode, Jr. et al.
2010/0036222 A1 2/2010 Goode, Jr. et al.
2010/0036223 A1 2/2010 Goode, Jr. et al.
2010/0036224 A1 2/2010 Goode, Jr. et al.
2010/0036225 A1 2/2010 Goode, Jr. et al.
2010/0041971 A1 2/2010 Goode, Jr. et al.
2010/0045465 A1 2/2010 Brauker et al.
2010/0049024 A1 2/2010 Saint et al.
2010/0063373 A1 3/2010 Kamath et al.
2010/0076283 A1 3/2010 Simpson et al.
2010/0081908 A1 4/2010 Dobbles et al.
2010/0081910 A1 4/2010 Brister et al.
2010/0087724 A1 4/2010 Brauker et al.
2010/0094110 A1 4/2010 Heller et al.
2010/0094111 A1 4/2010 Heller et al.
2010/0094112 A1* 4/2010 Heller et al. 600/345
2010/0096259 A1 4/2010 Zhang et al.
2010/0099970 A1 4/2010 Shults et al.
2010/0099971 A1 4/2010 Shults et al.
2010/0119693 A1 5/2010 Tapsak et al.
2010/0121169 A1 5/2010 Petisce et al.
2010/0145172 A1 6/2010 Petisce et al.
2010/0160760 A1 6/2010 Shults et al.
2010/0161269 A1 6/2010 Kamath et al.
2010/0168540 A1 7/2010 Kamath et al.
2010/0168541 A1 7/2010 Kamath et al.
2010/0168542 A1 7/2010 Kamath et al.
2010/0168543 A1 7/2010 Kamath et al.
2010/0168544 A1 7/2010 Kamath et al.
2010/0168545 A1 7/2010 Kamath et al.
2010/0168546 A1 7/2010 Kamath et al.
2010/0168657 A1 7/2010 Kamath et al.
2010/0174157 A1 7/2010 Brister et al.
2010/0174158 A1 7/2010 Kamath et al.
2010/0174163 A1 7/2010 Brister et al.
2010/0174164 A1 7/2010 Brister et al.
2010/0174165 A1 7/2010 Brister et al.
2010/0174166 A1 7/2010 Brister et al.
2010/0174167 A1 7/2010 Kamath et al.
2010/0174168 A1 7/2010 Goode et al.
2010/0179399 A1 7/2010 Goode et al.
2010/0179400 A1 7/2010 Brauker et al.
2010/0179401 A1 7/2010 Rasdal et al.
2010/0179402 A1 7/2010 Goode et al.
2010/0179404 A1 7/2010 Kamath et al.
2010/0179405 A1 7/2010 Goode et al.
2010/0179406 A1 7/2010 Goode et al.
2010/0179407 A1 7/2010 Goode et al.
2010/0179408 A1 7/2010 Kamath et al.
2010/0179409 A1 7/2010 Kamath et al.
2010/0185065 A1 7/2010 Goode et al.
2010/0185069 A1 7/2010 Brister et al.
2010/0185070 A1 7/2010 Brister et al.
2010/0185071 A1 7/2010 Simpson et al.
2010/0185072 A1 7/2010 Goode et al.
2010/0185073 A1 7/2010 Goode et al.
2010/0185074 A1 7/2010 Goode et al.
2010/0185075 A1 7/2010 Brister et al.
2010/0191082 A1 7/2010 Brister et al.
2010/0198035 A1 8/2010 Kamath et al.
2010/0198036 A1 8/2010 Kamath et al.
2010/0204555 A1 8/2010 Shults et al.
2010/0204559 A1 8/2010 Shults et al.
2010/0212583 A1 8/2010 Brister et al.
2010/0214104 A1 8/2010 Goode, Jr. et al.
2010/0217106 A1 8/2010 Goode, Jr. et al.
2010/0217555 A1 8/2010 Kamath et al.
2010/0217557 A1 8/2010 Kamath et al.
2010/0223013 A1 9/2010 Kamath et al.
2010/0223022 A1 9/2010 Kamath et al.
2010/0223023 A1 9/2010 Kamath et al.
2010/0228109 A1 9/2010 Kamath et al.
2010/0228497 A1 9/2010 Kamath et al.
2010/0234707 A1 9/2010 Goode, Jr. et al.
2010/0234796 A1 9/2010 Kamath et al.
2010/0235106 A1 9/2010 Kamath et al.
2010/0240975 A1 9/2010 Goode, Jr. et al.
2010/0240976 A1 9/2010 Goode, Jr. et al.
2010/0261987 A1 10/2010 Kamath et al.
2010/0274107 A1 10/2010 Boock et al.
2010/0280341 A1 11/2010 Boock et al.
2010/0286496 A1 11/2010 Simpson et al.
2010/0298684 A1 11/2010 Leach et al.
2010/0305869 A1 12/2010 Brauker et al.
2010/0324403 A1 12/2010 Brister et al.
2010/0331644 A1 12/2010 Neale et al.
2010/0331648 A1 12/2010 Kamath et al.
2010/0331655 A1 12/2010 Kamath et al.
2010/0331656 A1 12/2010 Mensinger et al.
2010/0331657 A1 12/2010 Mensinger et al.
2011/0004085 A1 1/2011 Mensinger et al.
2011/0009727 A1 1/2011 Mensinger et al.
2011/0024043 A1 2/2011 Boock et al.
2011/0024307 A1 2/2011 Simpson et al.
2011/0027127 A1 2/2011 Simpson et al.
2011/0027453 A1 2/2011 Boock et al.
2011/0027458 A1 2/2011 Boock et al.

(56) **References Cited**

U.S. PATENT DOCUMENTS

2011/0028815	A1	2/2011	Simpson et al.
2011/0028816	A1	2/2011	Simpson et al.
2011/0046467	A1	2/2011	Simpson et al.

FOREIGN PATENT DOCUMENTS

CN	1552610	12/2004
CN	1735375	2/2006
CN	101091114	12/2007
CN	100407988	8/2008
CN	101363844	2/2009
DE	2903216	8/1979
DE	227029	9/1985
DE	3934299	10/1990
DE	4234553	1/1995
DE	4401400	7/1995
EP	0010375	4/1980
EP	0026995	4/1981
EP	0048090	3/1982
EP	0078636	5/1983
EP	0080304	6/1983
EP	0096228	12/1983
EP	0096288	12/1983
EP	0098592	1/1984
EP	0107634	5/1984
EP	0125139	11/1984
EP	0127958	12/1984
EP	0136362	4/1985
EP	0170375	2/1986
EP	0177743	4/1986
EP	0184909	6/1986
EP	0206218	12/1986
EP	0225474	6/1987
EP	0230472	8/1987
EP	0241309	10/1987
EP	0245073	11/1987
EP	0255291	2/1988
EP	0278647	8/1988
EP	0284518	9/1988
EP	0320109	6/1989
EP	0353328	2/1990
EP	0359831	3/1990
EP	0368209	5/1990
EP	0368290	5/1990
EP	0390390	10/1990
EP	0396788	11/1990
EP	0400918	12/1990
EP	0453283	10/1991
EP	0470290	2/1992
EP	0476980	3/1992
EP	0504835	9/1992
EP	0512122	11/1992
EP	0534074	3/1993
EP	0535898	4/1993
EP	0539625	5/1993
EP	0563795	10/1993
EP	0561966	10/1994
EP	0286118	1/1995
EP	0653718	5/1995
EP	0727891	8/1996
EP	0776628	6/1997
EP	0800082	10/1997
EP	0817809	1/1998
EP	0838230	4/1998
EP	0880936	12/1998
EP	0885932	12/1998
EP	0967788	12/1999
EP	0970655	1/2000
EP	0995805	4/2000
EP	1034734	9/2000
EP	1048264	11/2000
EP	1077634	2/2001
EP	1078258	2/2001
EP	1355568	10/2003
EP	2187555	5/2010
EP	2201969	6/2010
EP	2305107	4/2011
EP	2305108	4/2011
FR	2656423	6/1991
FR	2760962	9/1998
GB	1394171	5/1975
GB	1442303	7/1976
GB	1579690	11/1980
GB	1599241	9/1981
GB	2073891	10/1981
GB	2149918	6/1985
GB	2154003	8/1985
GB	2194892	3/1988
GB	2204408	11/1988
GB	2225637	6/1990
GB	2254436	10/1992
JP	54-041191	4/1979
JP	55-010581	1/1980
JP	55-010583	1/1980
JP	55-010584	1/1980
JP	55-012406	1/1980
JP	56-163447	12/1981
JP	57-070448	4/1982
JP	60-173457	9/1985
JP	60-173458	9/1985
JP	60-173459	9/1985
JP	60-210243	10/1985
JP	61-090050	5/1986
JP	62-083649	4/1987
JP	62-083849	4/1987
JP	62-085855	4/1987
JP	62-114747	5/1987
JP	63-058149	3/1988
JP	63-128252	5/1988
JP	63-139246	6/1988
JP	63-259457	10/1988
JP	63-294799	12/1988
JP	63-317757	12/1988
JP	63-317758	12/1988
JP	1-114746	5/1989
JP	1-114747	5/1989
JP	1-124060	5/1989
JP	1-134244	5/1989
JP	1-156658	6/1989
JP	2-062958	3/1990
JP	2-120655	5/1990
JP	2-287145	11/1990
JP	2-310457	12/1990
JP	3-026956	2/1991
JP	3-028752	2/1991
JP	3-202764	9/1991
JP	04-215739	8/1992
JP	5-072171	3/1993
JP	5-196595	8/1993
JP	6-190050	7/1994
JP	06-277201	10/1994
JP	7-055757	3/1995
JP	7-072585	3/1995
JP	7-275227	10/1995
JP	07-311196	11/1995
JP	8-154903	6/1996
JP	8-285814	11/1996
JP	8-285815	11/1996
JP	9-021778	1/1997
JP	9-101280	4/1997
JP	9-285459	11/1997
JP	9-512200	12/1997
JP	10-170471	6/1998
JP	11-153575	6/1999
JP	11-192886	7/1999
JP	11-225103	8/1999
JP	11-275059	10/1999
JP	2000-000231	1/2000
JP	2000-500380	1/2000
JP	2000-060826	2/2000
JP	2000-098045	4/2000
JP	2000-101478	4/2000
JP	2000-116628	4/2000

(56) **References Cited**

FOREIGN PATENT DOCUMENTS

JP	2000-349689	12/2000
JP	2002-513602	5/2002
JP	2002-189015	7/2002
JP	2003-502090	1/2003
JP	2003-108679	4/2003
JP	2004-520898	7/2004
JP	2007-203092	8/2007
JP	2008-062072	3/2008
JP	2008-511374	4/2008
SU	1281988	1/1987
WO	WO-85/05119	11/1985
WO	WO-86/00513	1/1986
WO	WO-86/05339	9/1986
WO	WO-87/00513	1/1987
WO	WO-87/06040	10/1987
WO	WO-89/02246	3/1989
WO	WO-89/02720	4/1989
WO	WO-89/05119	6/1989
WO	WO-89/08713	9/1989
WO	WO-90/00367	1/1990
WO	WO-90/00738	1/1990
WO	WO-90/05300	5/1990
WO	WO-90/05910	5/1990
WO	WO-90/10861	9/1990
WO	WO-90/13021	11/1990
WO	WO-91/01680	2/1991
WO	WO-91/04704	4/1991
WO	WO-91/15993	10/1991
WO	WO-92/04153	3/1992
WO	WO-92/07525	5/1992
WO	WO-92/10584	6/1992
WO	WO-92/13271	8/1992
WO	WO-93/05703	4/1993
WO	WO-93/14693	8/1993
WO	WO-93/19701	10/1993
WO	WO-93/23744	11/1993
WO	WO-94/20602	9/1994
WO	WO-94/22367	10/1994
WO	WO-94/27140	11/1994
WO	WO-95/06240	3/1995
WO	WO-95/07109	3/1995
WO	WO-96/01611	1/1996
WO	WO-96/07908	3/1996
WO	WO-96/14026	5/1996
WO	WO-96/25089	8/1996
WO	WO-96/30431	10/1996
WO	WO-96/32076	10/1996
WO	WO-96/35370	11/1996
WO	WO-96/36296	11/1996
WO	WO-96/37066	11/1996
WO	WO-97/01986	1/1997
WO	WO-97/02847	1/1997
WO	WO-97/06727	2/1997
WO	WO-97/19344	5/1997
WO	WO-97/20207	6/1997
WO	WO-97/28737	8/1997
WO	WO-97/41421	11/1997
WO	WO-97/42882	11/1997
WO	WO-97/42883	11/1997
WO	WO-97/42886	11/1997
WO	WO-97/42888	11/1997
WO	WO-97/43962	11/1997
WO	WO-97/46868	12/1997
WO	WO-98/09167	3/1998
WO	WO-98/10699	3/1998
WO	WO-98/19159	5/1998
WO	WO-98/24358	6/1998
WO	WO-98/24366	6/1998
WO	WO-98/52045	11/1998
WO	WO-98/52293	11/1998
WO	WO-98/56293	12/1998
WO	WO-99/05966	2/1999
WO	WO-99/13574	3/1999
WO	WO-99/32883	7/1999
WO	WO-99/48419	9/1999
WO	WO-99/56613	11/1999
WO	WO-99/58051	11/1999
WO	WO-99/58973	11/1999
WO	WO-00/13580	3/2000
WO	WO-00/18294	4/2000
WO	WO-00/19887	4/2000
WO	WO-00/20626	4/2000
WO	WO-00/32098	6/2000
WO	WO-00/33065	6/2000
WO	WO-00/49940	8/2000
WO	WO-00/59370	10/2000
WO	WO-00/59373	10/2000
WO	WO-00/62664	10/2000
WO	WO-00/62665	10/2000
WO	WO-00/74753	12/2000
WO	WO-00/78210	12/2000
WO	WO-00/78992	12/2000
WO	WO-01/12158	2/2001
WO	WO-01/20019	3/2001
WO	WO-01/20334	3/2001
WO	WO-01/24038	4/2001
WO	WO-01/33216	5/2001
WO	WO-01/34243	5/2001
WO	WO-01/43660	6/2001
WO	WO-01/52727	7/2001
WO	WO-01/52935	7/2001
WO	WO-01/54753	8/2001
WO	WO-01/57238	8/2001
WO	WO-01/57239	8/2001
WO	WO-01/58348	8/2001
WO	WO-01/60248	8/2001
WO	WO-01/67009	9/2001
WO	WO-01/68901	9/2001
WO	WO-01/69222	9/2001
WO	WO-01/88524	11/2001
WO	WO-01/88534	11/2001
WO	WO-02/16905	2/2002
WO	WO-02/17210	2/2002
WO	WO-02/24065	3/2002
WO	WO-02/058537	8/2002
WO	WO-02/078512	10/2002
WO	WO-02/082989	10/2002
WO	WO-02/100266	12/2002
WO	WO-03/072269	9/2003
WO	WO-03/076893	9/2003
WO	WO-03/082091	10/2003
WO	WO-03/101862	12/2003
WO	WO-2004/061420	7/2004
WO	WO-2005/041766	5/2005
WO	WO-2005/065542	7/2005
WO	WO-2005/089103	9/2005
WO	WO-2005/026689	10/2005
WO	WO-2006/105146	10/2006
WO	WO-2006/119084	11/2006
WO	WO-2007/002189	1/2007
WO	WO-2007/016399	2/2007
WO	WO-2007/027381	3/2007
WO	WO-2007/027788	3/2007
WO	WO-2007/051139	5/2007
WO	WO-2007/053832	5/2007
WO	WO-2007/056638	5/2007
WO	WO-2007/120363	10/2007
WO	WO-2009/029662	3/2009
WO	WO-2009/058824	5/2009
WO	WO-2011/002692	1/2011
WO	WO-2011/002693	1/2011
WO	WO-2011/002694	1/2011

OTHER PUBLICATIONS

U.S. Appl. No. 12/495,807, Notice of Allowance mailed Feb. 6, 2013.

U.S. Appl. No. 12/495,807, Office Action mailed Jan. 16, 2013.

U.S. Appl. No. 12/495,807, Office Action mailed Jul. 21, 2011.

U.S. Appl. No. 12/495,807, Office Action mailed Jun. 18, 2012.

U.S. Appl. No. 12/495,807, Office Action mailed Nov. 25, 2011.

"Poretics Polycarbonate Membrane", *Osmonics Filtration and Separation Group*, 2002.

(56) **References Cited**

OTHER PUBLICATIONS

Abel, P. U., et al., "Biosensors for In Vivo Glucose Measurement: Can We Cross the Experimental Stage", *Biosensors and Bioelectronics*, vol. 17, 2002, pp. 1059-1070.
Abruna, H. D., et al., "Rectifying Interfaces Using Two-Layer Films of Electrochemically Polymerized Vinylpyridine and Vinylbipyridine Complexes of Ruthenium and Iron on Electrodes", *Journal of the American Chemical Society*, vol. 103, No. 1, 1981, pp. 1-5.
Albery, W. J., et al., "Amperometric Enzyme Electrodes Part II: Conducting Salts as Electrode Materials for the Oxidation of Glucose Oxidase", *Journal of ElectroAnalytical Chemistry*, vol. 194, 1985, pp. 223-235.
Albery, W. J., et al., "Amperometric Enzyme Electrodes", *Philosophical Transactions of the Royal Society of London*, vol. 316, 1987, pp. 107-119.
Alcock, S. J., et al., "Continuous Analyte Monitoring to Aid Clinical Practice", *IEEE Engineering in Medicine and Biology Magazine*, 1994, pp. 319-325.
Anderson, L. B., et al., "Thin-Layer Electrochemistry: Steady-State Methods of Studying Rate Processes", *Journal of ElectroAnalytical Chemistry*, vol. 10, 1965, pp. 295-305.
Armour, J. C., et al., "Application of Chronic Intravascular Blood Glucose Sensor in Dogs", *Diabetes*, vol. 39, 1990, pp. 1519-1526.
Asberg, P., et al., "Hydrogels of a Conducting Conjugated Polymer as 3-D Enzyme Electrode", *Biosensors & Bioelectronics*, vol. 19, 2003, pp. 199-207.
Atanasov, P., et al., "Biosensor for Continuous Glucose Monitoring", *Biotechnology and Bioengineering*, vol. 43, 1994, pp. 262-266.
Atanasov, P., et al., "Implantation of a Refillable Glucose Monitoring-Telemetry Device", *Biosensors & Bioelectronics*, vol. 12, No. 7, 1997, pp. 669-680.
Aussedat, B., et al., "A User-Friendly Method for Calibrating a Subcutaneous Glucose Sensor-Based Hypoglycaemic Alarm", *Biosensors & Bioelectronics*, vol. 12, No. 11, 1997, pp. 1061-1071.
Baker, D. A., et al., "Dynamic Concentration Challenges for Biosensor Characterization", *Biosensors & Bioelectronics*, vol. 8, 1993, pp. 433-441.
Baker, D. A., et al., "Dynamic Delay and Maximal Dynamic Error in Continuous Biosensors", *Analytical Chemistry*, vol. 68, No. 8, 1996, pp. 1292-1297.
Bani Amer, M. M., "An Accurate Amperometric Glucose Sensor Based Glucometer with Eliminated Cross-Sensitivity", *Journal of Medical Engineering & Technology*, vol. 26, No. 5, 2002, pp. 208-213.
Bard, A. J., et al., *Electrochemical Methods*, 1980, pp. 173-175.
Bartlett, P. N., et al., "Covalent Binding of Electron Relays to Glucose Oxidase", *Journal of the Chemical Society, Chemical Communications*, 1987, pp. 1603-1604.
Bartlett, P. N., et al., "Modification of Glucose Oxidase by Tetrathiafulvalene", *Journal of the Chemical Society, Chemical Communications*, 1990, pp. 1135-1136.
Bartlett, P. N., et al., "Strategies for the Development of Amperometric Enzyme Electrodes", *Biosensors*, vol. 3, 1987/88, pp. 359-379.
Beach, R. D., et al., "Subminiature Implantable Potentiostat and Modified Commercial Telemetry Device for Remote Glucose Monitoring", *IEEE Transactions on Instrumentation and Measurement*, vol. 28, No. 6, 1999, pp. 1239-1245.
Beech, W. A., "AX.25 Link Access Protocol for Amateur packet Radio", *Tucson Amateur Packet Radio Corporation*, 1998, pp. 1-133.
Bellucci, F., et al., "Electrochemical Behaviour of Graphite-Epoxy Composite Materials (GECM) in Aqueous Salt Solutions", *Journal of Applied Electrochemistry*, vol. 16, 1986, pp. 15-22.
Bennion, N., et al., "Alternate Site Glucose Testing: A Crossover Design", *Diabetes Technology & Therapeutics*, vol. 4, No. 1, 2002, pp. 25-33.
Biermann, E., et al., "How Would Patients Behave if They Were Continually Informed of Their Blood Glucose Levels? A Simulation Study Using a 'Virtual' Patient", *Diabetes Technology & Therapeutics*, vol. 10, No. 3, 2008, pp. 178-187.
Bindra, D. S., et al., "Design and in Vitro Studies of a Needle-Type Glucose Sensor for Subcutaneous Monitoring", *Analytical Chemistry*, vol. 63, No. 17, 1991, pp. 1692-1696.
Bindra, D. S., et al., "Pulsed Amperometric Detection of Glucose in Biological Fluids at a Surface-Modified Gold Electrode", *Analytical Chemistry*, vol. 61, No. 22, 1989, pp. 2566-2570.
Bisenberger, M., et al., "A Triple-Step Potential Waveform at Enzyme Multisensors with Thick-Film Gold Electrodes for Detection of Glucose and Sucrose", *Sensors and Actuators B*, vol. 28, 1995, pp. 181-189.
Bland, J. M., et al., "A Note on the Use of the Intraclass Correlation Coefficient in the Evaluation of Agreement Between Two Methods of Measurement", *Computers in Biology and Medicine*, vol. 20, No. 5, 1990, pp. 337-340.
Bland, J. M., et al., "Statistical Methods for Assessing Agreement Between Two Methods of Clinical Measurement", *The Lancet*, 1986, pp. 307-310.
Blank, T. B., et al., "Clinical Results From a Non-Invasive Blood Glucose Monitor", *Optical Diagnostics and Sensing of Biological Fluids and Glucose and Cholesterol Monitoring II, Proceedings of SPIE*, vol. 4624, 2002, pp. 1-10.
Bobbioni-Harsch, E., et al., "Lifespan of Subcutaneous Glucose Sensors and Their Performances During Dynamic Glycaemia Changes in Rats", *Journal of Biomedical Engineering*, vol. 15, 1993, pp. 457-463.
Bode, B. W., "Clinical Utility of the Continuous Glucose Monitoring System", *Diabetes Technology & Therapeutics*, vol. 2, Sup. 1, 2000, pp. S35-S41.
Bode, B. W., et al., "Continuous Glucose Monitoring Used to Adjust Diabetes Therapy Improves Glycosylated Hemoglobin: A Pilot Study", *Diabetes Research and Clinical Practice*, vol. 46, 1999, pp. 183-190.
Bode, B. W., et al., "Using the Continuous Glucose Monitoring System to Improve the Management of Type I Diabetes", *Diabetes Technology & Therapeutics*, vol. 2, Sup. 1, 2000, pp. S43-S48.
Boedeker Plastics, Inc., "Polyethylene Specifications", Web Page of Boedeker.com, 2007, pp. 1-3.
Bolinder, J., et al., "Microdialysis Measurement of the Absolute Glucose Concentration in Subcutaneous Adipose Tissue Allowing Glucose Monitoring in Diabetic Patients", *Diabetologia*, vol. 35, 1992, pp. 1177-1180.
Bolinder, J., et al., "Self-Monitoring of Blood Glucose in Type I Diabetic Patients: Comparison with Continuous Microdialysis Measurements of Glucose in Subcutaneous Adipose Tissue During Ordinary Life Conditions", *Diabetes Care*, vol. 20, No. 1, 1997, pp. 64-70.
Bott, A. W., "A Comparison of Cyclic Voltammetry and Cyclic Staircase Voltammetry", *Current Separations*, vol. 16, No. 1, 1997, pp. 23-26.
Bott, A. W., "Electrochemical Methods for the Determination of Glucose", *Current Separations*, vol. 17, No. 1, 1998, pp. 25-31.
Bowman, L., et al., "The Packaging of Implantable Integrated Sensors", *IEEE Transactions on Biomedical Engineering*, vol. 33, No. 2, 1986, pp. 248-255.
Brandt, J., et al., "Covalent Attachment of Proteins to Polysaccharide Carriers by Means of Benzoquinone", *Biochimica et Biophysica Acta*, vol. 386, 1975, pp. 196-202.
Brauker, J., et al., "Sustained Expression of High Levels of Human Factor IX from Human Cells Implanted Within an Immunoisolation Device into Athymic Rodents", *Human Gene Therapy*, vol. 9, No. 6, 1998, pp. 879-888.
Bremer, T. M., et al., "Benchmark Data from the Literature for Evaluation of New Glucose Sensing Technologies", *Diabetes Technology & Therapeutics*, vol. 3, No. 3, 2001, pp. 409-418.
Bremer, T., et al., "Is Blood Glucose Predictable from Previous Values?", *Diabetes*, vol. 48, 1999, pp. 445-451.
Brooks, S. L., et al., "Development of an On-Line Glucose Sensor for Fermentation Monitoring", *Biosensors*, vol. 3, 1987/88, pp. 45-56.
Brownlee, M., et al., "A Glucose-Controlled Insulin-Delivery System: Semisynthetic Insulin Bound to Lectin", *Science*, vol. 206, 1979, 1190-1191.

(56) **References Cited**

OTHER PUBLICATIONS

Cai, Q., et al., "A Wireless, Remove Query Glucose Biosensor Based on a pH-Sensitive Polymer", *Analytical Chemistry*, vol. 76, No. 14, 2004, pp. 4038-4043.
Candas, B., et al., "An Adaptive Plasma Glucose Controller Based on a Nonlinear Insulin/Glucose Model", *IEEE Transactions on Biomedical Engineering*, vol. 41, No. 2, 1994, pp. 116-124.
Cass, A. E., et al., "Ferricinum Ion as an Electron Acceptor for Oxido-Reductases", *Journal of ElectroAnalytical Chemistry*, vol. 190, 1985, pp. 117-127.
Cass, A. E., et al., "Ferrocene-Medicated Enzyme Electrode for Amperometric Determination of Glucose", *Analytical Chemistry*, vol. 56, No. 4, 1984, 667-671.
Castner, J. F., et al., "Mass Transport and Reaction Kinetic Parameters Determined Electrochemically for Immobilized Glucose Oxidase", *Biochemistry*, vol. 23 No. 10, 1984, 2203-2210.
Chen, J. C., et al., "A Comparison of MAC Protocols for Wireless Local Networks Based on battery Power Consumption", *IEEE*, 1998, pp. 150-157.
Chen, T., et al., "Defining the Period of Recovery of the Glucose Concentration After its Local Perturbation by the Implantation of a Miniature Sensor", *Clinical Chemistry and Laboratory Medicine*, vol. 40, No. 8, 2002, pp. 486-489.
Chia, C. W., et al., "Glucose Sensors: Toward Closed Loop Insulin Delivery", *Endocrinology and Metabolism Clinics of North America*, vol. 33, 2004, pp. 175-195.
Choleau, C., et al., "Calibration of a Subcutaneous Amperometric Glucose Sensor Implanted for 7 Days in Diabetic Patients Part 2: Superiority of the One-Point Calibration Method", *Biosensors and Bioelectronics*, vol. 17, 2002, pp. 647-654.
Choleau, C., et al., "Calibration of a Subcutaneous Amperometric Glucose Sensor Part 1: Effect of Measurement Uncertainties on the Determination of Sensor Sensitivity and Background Current", *Biosensors and Bioelectronics*, vol. 17, 2002, pp. 641-646.
Claremont, D. J., et al., "Biosensors for Continuous In Vivo Glucose Monitoring", *Proceedings of the Annual International Conference of the IEEE Engineering in Medicine and Biology Society*, vol. 10, 1988.
Clark Jr., L. C., et al., "Differential Anodic Enzyme Polarography for the Measurement of Glucose", *Oxygen Transport to Tissue: Instrumentation, Methods, and Physiology*, 1973, pp. 127-133.
Clark Jr., L. C., et al., "Electrode Systems for Continuous Monitoring in Cardiovascular Surgery", *Annals New York Academy of Sciences*, 1962, pp. 29-45.
Clark Jr., L. C., et al., "Long-term Stability of Electroenzymatic Glucose Sensors Implanted in Mice", *American Society of Artificial Internal Organs Transactions*, vol. XXXIV, 1988, pp. 259-265.
Clarke, W. L., et al., "Evaluating Clinical Accuracy of Systems for Self-Monitoring of Blood Glucose", *Diabetes Care*, vol. 10, No. 5, 1987, pp. 622-628.
Complaint, "*Abbott Diabetes Care, Inc.* v. *Dexcom, Inc.*", filed Aug. 11, 2005.
Complaint, Amended, "*Abbott Diabetes Care, Inc.* v. *Dexcom, Inc.*", filed Jun. 27, 2006.
Cox, D. J., et al., "Accuracy of Perceiving Blood Glucose in IDDM", *Diabetes Care*, vol. 8, No. 6, 1985, pp. 529-536.
Csoregi, E., et al., "Amperometric Microbiosensors for Detection of Hydrogen Peroxide and Glucose Based on Peroxidase-Modified Carbon Fibers", *Electroanalysis*, vol. 6, 1994, pp. 925-933.
Csoregi, E., et al., "Design and Optimization of a Selective Subcutaneously Implantable Glucose Electrode Based on 'Wired' Glucose Oxidase", *Analytical Chemistry*, vol. 67, No. 7, 1995, pp. 1240-1244.
Csoregi, E., et al., "Design, Characterization, and One-Point in Vivo Calibration of a Subcutaneously Implanted Glucose Electrode", *Analytical Chemistry*, vol. 66 No. 19, 1994, pp. 3131-3138.
Csoregi, E., et al., "On-Line Glucose Monitoring by Using Microdialysis Sampling and Amperometric Detection Based on 'Wired' Glucose Oxidase in Carbon Paste", *Mikrochimica Acta*, vol. 121, 1995, pp. 31-40.
D'Arrigo, G., et al., "Porous-Si Based Bio Reactors for Glucose Monitoring and Drugs Production", *Proceedings of SPIE: Microfluids, BioMEMS, and Medical Microsystems*, vol. 4982, 2003, pp. 178-184.
Dai, W. S., et al., "Hydrogel Membranes with Mesh Size Asymmetry Based on the Gradient Crosslinking of Poly(vinyl alcohol)," *Journal of Membrane Science*, vol. 156, 1999, pp. 67-79.
Davies, M. L., et al., "Polymer Membranes in Clinical Sensor Applications", *Biomaterials*, vol. 13, No. 14, 1992, pp. 971-978.
Davis, G., "Electrochemical Techniques for the Development of Amperometric Biosensors", *Biosensors*, vol. 1, 1985, pp. 161-178.
Degani, Y., et al., "Direct Electrical Communication Between Chemically Modified Enzymes and Metal Electrodes. 1. Electron Transfer from Glucose Oxidase to Metal Electrodes via Electron Relays, Bound Covalently to the Enzyme", *The Journal of Physical Chemistry*, vol. 91, No. 6, 1987, pp. 1285-1289.
Degani, Y., et al., "Direct Electrical Communication Between Chemically Modified Enzymes and Metal Electrodes. 2. Methods for Bonding Electron-Transfer Relays to Glucose Oxidase and D-Amino-Acid Oxidase", *Journal of the American Chemical Society*, vol. 110, No. 8, 1988, pp. 2615-2620.
Degani, Y., et al., "Electrical Communication Between Redox Centers of Glucose Oxidase and Electrodes via Electrostatically and Covalently Bound Redox Polymers", *Journal of the American Chemical Society*, vol. 111, 1989, pp. 2357-2358.
Denisevich, P., et al., "Unidirectional Current Flow and Charge State Trapping at Redox Polymer Interfaces on Bilayer Electrodes: Principles, Experimental Demonstration, and Theory", *Journal of the American Chemical Society*, vol. 103, 1981, pp. 4727-4737.
Dicks, J. M., et al., "Ferrocene Modified Polypyrrole with Immobilised Glucose Oxidase and its Application in Amperometric Glucose Microbiosensors", *Annales de Biologie Clinique*, vol. 47, 1989, pp. 607-619.
Dixon, B. M., et al., "Characterization In Vitro and In Vivo of the Oxygen Dependence of an Enzyme/Polymer Biosensors for Monitoring Brain Glucose", *Journal of Neuroscience Methods*, vol. 119, 2002, pp. 135-142.
Eighth Annual Diabetes Technology Meeting Abstracts, Nov. 13-15, 2008, pp. A1-A182.
El-Khatib, F. H, et al., "Adaptive Closed-Loop Control Provides Blood-Glucose Regulation Using Subcutaneous Insulin and Glucagon Infusion in Diabetic Swine", *Journal of Diabetes Science and Technology*, vol. 1, No. 2, 2007, pp. 181-192.
Ellis, C. D., et al., "Selectivity and Directed Charge Transfer through an Electroactive Metallopolymer Film", *Journal of the American Chemical Society*, vol. 103, No. 25, 1981, pp. 7480-7483.
El-Sa'ad, L., et al., "Moisture Absorption by Epoxy Resins: The Reverse Thermal Effect", *Journal of Materials Science*, vol. 25, No. 8, 1990, pp. 3577-3582.
Engstrom, R. C., "Electrochemical Pretreatment of Glassy Carbon Electrodes", *Analytical Chemistry*, vol. 54, No. 13, 1982, pp. 2310-2314.
Engstrom, R. C., et al., "Characterization of Electrochemically Pretreated Glassy Carbon Electrodes", *Analytical Chemistry*, vol. 56, No. 2, 1984, pp. 136-141.
Ernst, H., et al., "Reliable Glucose Monitoring Through the Use of Microsystem Technology", *Analytical and Bioanalytical Chemistry*, vol. 373, 2002, pp. 758-761.
Fabietti, P. G., et al. "Clinical Validation of a New Control-Oriented Model of Insulin and Glucose Dynamics in Subjects with Type 1 Diabetes", *Diabetes Technology & Therapeutics*, vol. 9, No. 4, 2007, pp. 327-338.
Fare, T. L., et al., "Functional Characterization of a Conducting Polymer-Based Immunoassay System", *Biosensors & Bioelectronics*, vol. 13, No. 3-4, 1998, pp. 459-470.
Feldman, B., et al., "A Continuous Glucose Sensor Based on Wired Enzyme™ Technology—Results from a 3-Day Trial in Patients with Type 1 Diabetes", *Diabetes Technology & Therapeutics*, vol. 5, No. 5, 2003, pp. 769-779.
Feldman, B., et al., "Correlation of Glucose Concentrations in Interstitial Fluid and Venous Blood During Periods of Rapid Glucose Change", *Abbott Diabetes Care, Inc. Freestyle Navigator Continuous Glucose Monitor Pamphlet*, 2004.

(56) **References Cited**

OTHER PUBLICATIONS

Feldman, B., et al., "Electron Transfer Kinetics at Redox Polymer/Solution Interfaces Using Microelectrodes and Twin Electrode Thin Layer Cells", *Journal of ElectroAnalytical Chemistry*, vol. 194, 1985, pp. 63-81.
Fischer, H., et al., "Intramolecular Electron Transfer Medicated by 4,4'-Bypyridine and Related Bridging Groups", *Journal of the American Chemical Society*, vol. 98, No. 18, 1976, pp. 5512-5517.
Flentge, F., et al., "An Enzyme-Reactor for Electrochemical Monitoring of Choline and Acetylcholine: Applications in High-Performance Liquid Chromatography, Bran Tissue, Microdialysis and Cerebrospinal Fluid," *Analytical Biochemistry*, vol. 204, 1992, pp. 305-310.
Foulds, N. C., et al., "Enzyme Entrapment in Electrically Conducting Polymers: Immobilisation of Glucose Oxidase in Polypyrrole and its Application in Amperometric Glucose Sensors", *Journal of the Chemical Society, Faraday Transactions 1*, vol. 82, 1986, pp. 1259-1264.
Foulds, N. C., et al., "Immobilization of Glucose Oxidase in Ferrocene-Modified Pyrrole Polymers", *Analytical Chemistry*, vol. 60, No. 22, 1988, pp. 2473-2478.
Frew, J. E., et al., "Electron-Transfer Biosensors", *Philosophical Transactions of the Royal Society of London*, vol. 316, 1987, pp. 95-106.
Frohnauer, M. K., et al., "Graphical Human Insulin Time-Activity Profiles Using Standardized Definitions", *Diabetes Technology & Therapeutics*, vol. 3, No. 3, 2001, pp. 419-429.
Frost, M. C., et al., "Implantable Chemical Sensors for Real-Time Clinical Monitoring: Progress and Challenges", *Current Opinion in Chemical Biology*, vol. 6, 2002, pp. 633-641.
Garg, S. K., et al., "Correlation of Fingerstick Blood Glucose Measurements with GlucoWatch Biographer Glucose Results in Young Subjects with Type 1 Diabetes", *Diabetes Care*, vol. 22, No. 10, 1999, pp. 1708-1714.
Garg, S. K., et al., "Improved Glucose Excursions Using an Implantable Real-Time Continuous Glucose Sensor in Adults with Type 1 Diabetes", *Diabetes Care*, vol. 27, No. 3, 2004, pp. 734-738.
Geller, R. L., et al., "Use of an Immunoisolation Device for Cell Transplantation and Tumor Immunotherapy", *Annals of the New York Academy of Sciences*, vol. 831, 1997, pp. 438-451.
Gerritsen, M., "Problems Associated with Subcutaneously Implanted Glucose Sensors", *Diabetes Care*, vol. 23, No. 2, 2000, pp. 143-145.
Gerritsen, M., et al., "Influence of Inflammatory Cells and Serum on the Performance of Implantable Glucose Sensors", *Journal of Biomedical materials Research*, vol. 54, 2001, pp. 69-75.
Gerritsen, M., et al., "Performance of Subcutaneously Implanted glucose Sensors for Continuous Monitoring", *The Netherlands Journal of Medicine*, vol. 54, 1999, pp. 167-179.
Gilligan, B. J., et al., "Evaluation of a Subcutaneous Glucose Sensor Out to 3 Months in a Dog Model", *Diabetes Care*, vol. 17, No. 8, 1994, pp. 882-887.
Gilligan, B. J., et al., "Feasibility of Continuous Long-Term Glucose Monitoring from a Subcutaneous Glucose Sensor in Humans", *Diabetes Technology & Therapeutics*, vol. 6, No. 3, 2004, pp. 378-386.
Godsland, I. F., et al., "Maximizing the Success Rate of Minimal Model Insulin Sensitivity Measurement in Humans: The Importance of Basal Glucose Levels," *Clinical Science*, vol. 101, 2001, pp. 1-9.
Gorton, L., et al., "Selective Detection in Flow Analysis Based on the Combination of Immobilized Enzymes and Chemically Modified Electrodes", *Analytica Chimica Acta*, vol. 250, 1991, pp. 203-248.
Gough, D. A., et al., "Immobilized Glucose Oxidase in Implantable Glucose Sensor Technology", *Diabetes Technology & Therapeutics*, vol. 2, No. 3, 2000, pp. 377-380.
Gough, D. A., et al., "The Implantable Glucose Sensor: An Example of Bioengineering Design", *Introduction to Bioengineering*, Chapter 3, 2001, pp. 57-66.
Graham, N. B., "Poly(ethylene oxide) and Related Hydrogels," *Hydrogels in Medicine and Pharmacy*, vol. II: Polymers, Chapter 4, 1987, pp. 95-113.
Grant, R., et al., *Grant & Hackh's Chemical Dictionary*, 1987, pp. 88, 89, 389, 390, 398.
Gregg, B. A., et al., "Cross-Linked Redox Gels Containing Glucose Oxidase for Amperometric Bionsensor Applications", *Analytical Chemistry*, vol. 62, No. 3, 1990, pp. 258-263.
Gregg, B. A., et al., "Redox Polymer Films Containing Enzymes. 1. A Redox-Conducting Epoxy Cement: Synthesis, Characterization, and Electrocatalytic Oxidation of Hydroquinone", *Journal of Physical Chemistry*, vol. 95, No. 15, 1991, 5970-5975.
Gross, T. M., et al., "Efficacy and Reliability of the Continuous Glucose Monitoring System", *Diabetes Technology & Therapeutics*, vol. 2, Sup. 1, 2000, pp. S19-S26.
Gross, T. M., et al., "Performance Evaluation of the MiniMed® Continuous Glucose Monitoring System During Patient Home Use", *Diabetes Technology & Therapeutics*, vol. 2, No. 1, 2000, pp. 49-56.
Guerci, B., et al., "Clinical Performance of CGMS in Type 1 Diabetic Patients Treated by Continuous Subcutaneous Insulin Infusion Using Insulin Analogs", *Diabetes Care*, vol. 26, 2003, pp. 582-589.
Gunasingham, et al., "Electrochemically Modulated Optrode for Glucose", *Biosensors & Bioelectronics*, vol. 7, 1992, pp. 353-359.
Hale, P. D., et al., "A New Class of Amperometric Biosensor Incorporating a Polymeric Electron-Transfer Mediator", *Journal of the American Chemical Society*, vol. 111, No. 9, 1989, pp. 3482-3484.
Hall, S. B., et al., "Electrochemical Oxidation of Hydrogen Peroxide at Platinum Electrodes: Part I: An Absorption-Controlled Mechanism", *Electrochimica Acta*, vol. 43, No. 5-6, 1998, pp. 579-588.
Hall, S. B., et al., "Electrochemical Oxidation of Hydrogen Peroxide at Platinum Electrodes: Part II: Effect of Potential", *Electrochimica Acta*, vol. 43, No. 14-15, 1998, pp. 2015-2024.
Hall, S. B., et al., "Electrochemical Oxidation of Hydrogen Peroxide at Platinum Electrodes: Part III: Effect of Temperature", *Electrochimica Acta*, vol. 44, 1999, pp. 2455-2462.
Hall, S. B., et al., "Electrochemical Oxidation of Hydrogen Peroxide at Platinum Electrodes: Part IV: Phosphate Buffer Dependence", *Electrochimica Acta*, vol. 44, 1999, pp. 4573-4582.
Hall, S. B., et al., "Electrochemical Oxidation of Hydrogen Peroxide at Platinum Electrodes: Part V: Inhibition by Chloride", *Electrochimica Acta*, vol. 45, 2000, pp. 3573-3579.
Harrison, D. J., et al., "Characterization of Perfluorosulfonic Acid Polymer Coated Enzyme Electrodes and a Miniatureized Integrated Potentiostat for Glucose Analysis in Whole Blood", Analytical Chemistry, vol. 60, No. 19, 1988, pp. 2002-2007.
Hawkridge, F. M., et al., "Indirect Coulometric Titration of Biological Electron Transport Components", *Analytical Chemistry*, vol. 45, No. 7, 1973, pp. 1021-1027.
Heise, T., et al., "Hypoglycemia Warning Signal and Glucose Sensors: Requirements and Concepts", *Diabetes Technology & Therapeutics*, vol. 5, No. 4, 2003, pp. 563-571.
Heller, A., "Electrical Connection Enzyme Redox Centers to Electrodes", *Journal of Physical Chemistry*, vol. 96, No. 9, 1990, pp. 3579-3587.
Heller, A., "Electrical Wiring of Redox Enzymes", *Accounts of Chemical Research* vol. 23, No. 5, 1990, 128-134.
Heller, A., "Implanted Electrochemical Glucose Sensors for the Management of Diabetes", *Annual Review of Biomedical Engineering*, vol. 1, 1999, pp. 153-175.
Heller, A., "Plugging Metal Connectors into Enzymes", *Nature Biotechnology*, vol. 21, No. 6, 2003, pp. 631-632.
Heller, A., et al., "Amperometric Biosensors Based on Three-Dimensional Hydrogel-Forming Epoxy Networks", *Sensors and Actuators B*, vol. 13-14, 1993, pp. 180-183.
Hicks, J. M., "In Situ Monitoring", *Clinical Chemistry*, vol. 31, No. 12, 1985, pp. 1931-1935.
Hitchman, M. L., "Measurement of Dissolved Oxygen: Chapter 3: Principles of Voltammetry", *Chemical Analysis*, vol. 49, 1978, pp. 34-123.
Hrapovic, S., et al., "Picoamperometric Detection of Glucose at Ultrasmall Platinum-Based Biosensors: Preparation and Characterization", *Analytical Chemistry*, vol. 75, No. 14, 2003, pp. 3308-3315.
Hu, Y., et al., "A Needle-Type Enzyme-Based Lactate Sensor for In Vivo Monitoring", *Analytica Chimica Acta*, vol. 281, 1993, pp. 503-511.

(56) **References Cited**

OTHER PUBLICATIONS

Huang, C. J., et al., "Electrochemical Generation of Oxygen", *Electrochemistry Research laboratory*, 1972, pp. 1-115.
Ianniello, R. M., et al., "Differential Pulse Voltammetric Study of Direct Electron Transfer in Glucose Oxidase Chemically Modified Graphite Electrodes", *Analytical Chemistry*, vol. 54, No. 7, 1982, pp. 1098-1101.
Ianniello, R. M., et al., "Immobilized Enzyme Chemically Modified Electrode as an Amperometric Sensor", *Analytical Chemistry*, vol. 53, No. 13, 1981, pp. 2090-2095.
Ikeda, T., et al., "Artificial Pancreas—Investigation of the Stability of Glucose Sensors Using a Telemetry System" (English language translation of abstract), *Jpn. J. Artif. Organs*, vol. 19, No. 2, 1990, 889-892.
Ikeda, T., et al., "Glucose Oxidase-Immobilized Benzoquinone-Carbon Paste Electrode as a Glucose Sensor", *Agricultural and Biological Chemistry*, vol. 49, No. 2, 1985, pp. 541-543.
Ikeda, T., et al., "Kinetics of Outer-Sphere Electron Transfers Between Metal Complexes in Solutions and Polymeric Films on Modified Electrodes", *Journal of the American Chemical Society*, vol. 103, No. 25, 1981, pp. 7422-7425.
Isermann, R., "Supervision, Fault-Detection and Fault-Diagnosis Methods—An Introduction", *Control Engineering Practice*, vol. 5, No. 5, 1997, pp. 639-652.
Isermann, R., et al., "Trends in the Application of Model-Based Fault Detection and Diagnosis of Technical Processes", *Control Engineering Practice*, vol. 5, No. 5, 1997, pp. 709-719.
Ishikawa, M., et al., "Initial Evaluation of a 290-μm Diameter Subcutaneous Glucose Sensor: Glucose Monitoring with a Biocompatible, Flexible-Wire, Enzyme-Based Amperometric Microsensor in Diabetic and Nondiabetic Humans", *Journal of Diabetes and Its Complications*, vol. 12, 1998, pp. 295-301.
Jablecki, M., et al., "Simulations of the Frequency Response of Implantable Glucose Sensors", *Analytical Chemistry*, vol. 72, No. 8, 2000, pp. 1853-1859.
Jaremko, J., et al., "Advances Toward the Implantable Artificial Pancreas for Treatment of Diabetes", *Diabetes Care*, vol. 21, No. 3, 1998, pp. 444-450.
Jensen, M. B., et al., "Fast Wave Forms for Pulsed Electrochemical Detection of Glucose by Incorporation of Reductive Desorption of Oxidation Products", *Analytical Chemistry*, vol. 69, No. 9, 1997, pp. 1776-1781.
Jeutter, D. C., "A Transcutaneous Implanted Battery Recharging and Biotelemeter Power Switching System", *IEEE Transactions on Biomedical Engineering*, vol. 29, No. 5, 1982, pp. 314-321.
Jobst, G., et al., "Thin-Film Microbiosensors for Glucose-Lactate Monitoring", *Analytical Chemistry*, vol. 68, No. 18, 1996, pp. 3173-3179.
Johnson, J. M., et al., "Potential-Dependent Enzymatic Activity in an Enzyme Thin-Layer Cell", *Analytical Chemistry*, vol. 54, No. 8, 1982, pp. 1377-1383.
Johnson, K. W., "Reproducible Electrodeposition of Biomolecules for the Fabrication of Miniature Electroenzymatic Biosensors", *Sensors and Actuators B*, vol. 5, 1991, pp. 85-89.
Johnson, K. W., et al., "In vivo Evaluation of an Electroenzymatic Glucose Sensor Implanted in Subcutaneous Tissue", *Biosensors & Bioelectronics*, vol. 7, 1992, pp. 709-714.
Johnson, P. C., "Peripheral Circulation", *John Wiley & Sons*, 1978, pp. 198.
Jonsson, G., et al., "An Amperometric Glucose Sensor Made by Modification of a Graphite Electrode Surface With Immobilized Glucose Oxidase and Adsorbed Mediator", *Biosensors*, vol. 1, 1985, pp. 355-368.
Josowicz, M., et al., "Electrochemical Pretreatment of Thin Film Platinum Electrodes", *Journal of the Electrochemical Society*, vol. 135 No. 1, 1988, pp. 112-115.
Jovanovic, L., "The Role of Continuous Glucose Monitoring in Gestational Diabetes Mellitus", *Diabetes Technology & Therapeutics*, vol. 2, Sup. 1, 2000, pp. S67-S71.
Jungheim, K., et al., "How Rapid Does Glucose Concentration Change in Daily Life of Patients with Type 1 Diabetes?", *Second Annual Diabetes Technology Meeting*, 2002, pp. A61-A62.
Jungheim, K., et al., "Risky Delay of Hypoglycemia Detection by Glucose Monitoring at the Arm", *Diabetes Care*, vol. 24, No. 7, 2001, pp. 1303-1304.
Kamath, A., et al., "Calibration of a Continuous Glucose Monitor: Effect of Glucose Rate of Change", *Eighth Annual Diabetes Technology Meeting Abstracts*, Nov. 13-15, 2008, pp. A88.
Kang, S. K., et al., "In Vitro and Short-Term In Vivo Characteristics of a Kel-F Thin Film Modified Glucose Sensor", *Analytical Sciences*, vol. 19, 2003, pp. 1481-1486.
Kaplan, S. M., "Wiley Electrical and Electronics Engineering Dictionary", *IEEE Press*, 2004, pp. 141, 142, 548, 549.
Kargol, M., et al., "Studies on the Structural Properties of Porous Membranes: Measurement of Linear Dimensions of Solutes", *Biophysical Chemistry*, vol. 91, 2001, pp. 263-271.
Katakis, I., et al., "Electrostatic Control of the Electron Transfer Enabling Binding of Recombinant Glucose Oxidase and Redox Polyelectrolytes", *Journal of the American Chemical Society*, vol. 116, No. 8, 1994, pp. 3617-3618.
Katakis, I., et al., "L-α-Glycerophosphate and L-Lactate Electrodes Based on the Electrochemical 'Wiring' of Oxidases", *Analytical Chemistry*, vol. 64, No. 9, 1992, pp. 1008-1013.
Kaufman, F. R., "Role of the Continuous Glucose Monitoring System in Pediatric Patients", *Diabetes Technology & Therapeutics*, vol. 2, Sup. 1, 2000, pp. S49-S52.
Kawagoe, J. L., et al., "Enzyme-Modified Organic Conducting Salt Microelectrode", *Analytical Chemistry*, vol. 63, No. 24, 1991, pp. 2961-2965.
Kemp, G. J., "Theoretical Aspects of One-Point Calibration: Causes and Effects of Some Potential Errors, and Their Dependence on Concentration," *Clinical Chemistry*, vol. 30, No. 7, 1984, pp. 1163-1167.
Kenausis, G., et al., "'Wiring' of Glucose Oxidase and Lactate Oxidase Within a Hydrogel Made with Poly(vinyl pyridine) complexed with $[Os(4,4'\text{-dimethoxy-}2,2'\text{-bipyridine})_2C1]^{+/2+}$", *Journal of the Chemical Society, Faraday Transactions*, vol. 92, No. 20, 1996, pp. 4131-4136.
Kerner, W., "Implantable Glucose Sensors: Present Status and Future Developments", *Experimental and Clinical Endocrinology & Diabetes*, vol. 109, Supplement 2, 2001, pp. S341-S346.
Kerner, W., et al., "The Function of a Hydrogen Peroxide-Detecting Electroenzymatic Glucose Electrode is Markedly Impaired in Human Subcutaneous Tissue and Plasma," *Biosensors & Bioelectronics*, vol. 8, 1993, pp. 473-482.
Korf, J., et al., "Monitoring of Glucose and Lactate Using Microdialysis: Applications in Neonates and Rat Brain," *Developmental Neuroscience*, vol. 15, 1993, pp. 240-246.
Koschinsky, T., et al., "New Approach to Technical and Clinical Evaluation of Devices for Self-Monitoring of Blood Glucose", *Diabetes Care*, vol. 11, No. 9, 1988, pp. 619-629.
Koschinsky, T., et al., "Sensors for Glucose Monitoring: Technical and Clinical Aspects" *Diabetes Metabolism Research and Reviews*, vol. 17, 2001, pp. 113-123.
Koudelka, M., et al., "In-Vivo Behaviour of Hypodermically Implanted Microfabricated Glucose Sensors", *Biosensors & Bioelectronics*, vol. 6, 1991, pp. 31-36.
Koudelka, M., et al., "Planar Amperometric Enzyme-Based Glucose Microelectrode", *Sensors and Actuators*, vol. 18, 1989, pp. 157-165.
Kovatchev, B. P., et al., "Evaluating the Accuracy of Continuous Glucose-Monitoring Sensors", *Diabetes Care*, vol. 27, No. 8, 2004, pp. 1922-1928.
Kraver, K. L., et al., "A Mixed-Signal Sensor Interface Microinstrument", *Sensors and Actuators A*, vol. 91, 2001, pp. 266-277.
Krouwer, J. S., "Setting Performance Goals and Evaluating Total Analytical error for Diagnostic Assays", *Clinical Chemistry*, vol. 48, No. 6, 2002, pp. 919-927.
Kruger, D., et al., "Psychological Motivation and Patient Education: A Role for Continuous Glucose Monitoring", *Diabetes Technology & Therapeutics*, vol. 2, Sup. 1, 2000, pp. S93-S97.

(56) **References Cited**

OTHER PUBLICATIONS

Kulys, J., et al., "Mediatorless Peroxidase Electrode and Preparation of Bienzyme Sensors", *Bioelectrochemistry and Bioenergetics*, vol. 24, 1990, pp. 305-311.
Kurnik, R. T., et al., "Application of the Mixtures of Experts Algorithm for Signal Processing in a Noninvasive Glucose Monitoring System" *Sensors and Actuators B*, vol. 60, 1990, pp. 19-26.
Kusano, H., "Glucose Enzyme Electrode with Percutaneous Interface Which Operates Independently of Dissolved Oxygen", *Clinical Physics and Physiological Measurement*, vol. 10, No. 1, 1989, pp. 1-9.
Lacourse, W. R., et al., "Optimization of Waveforms for Pulsed Amperometric Detection of Carbohydrates Based on Pulsed Voltammetry", *Analytical Chemistry*, vol. 65, No. 1, 1993, pp. 50-55.
Lager, W., et al., "Implantable Electrocatalytic Glucose Sensor", *Hormone Metabolic Research*, vol. 26, 1994, pp. 526-530.
Laurell, T., "A Continuous Glucose Monitoring System Based on Microdialysis", *Journal of Medical Engineering & Technology*, vol. 16, No. 5, 1992, pp. 187-193.
Lee, E., et al., "Effects of Pore Size, Void Volume, and Pore Connectivity on Tissue Responses to Porous Silicone Implants", *Transactions on the Twenty-Fifth Annual Meeting of the Society for Biomaterials*, vol. 22, 1999, pp. 171.
Lerner, H., et al., "An Implantable Electrochemical Glucose Sensor", *Annals of the New York Academy of Sciences*, vol. 428, 1984, pp. 263-278.
Lewis, R. J., ed., "2-hydroxyethyl methacrylate", *Hawley's Condensed Chemical Dictionary, Twelfth Edition*, 1993, pp. 596.
Leypoldt, J. K., et al., "Model of a Two-Substrate Enzyme Electrode for Glucose", *Analytical Chemistry*, vol. 56, No. 14, 1984, pp. 2896-2904.
Lindner, E., et al., "Flexible (Kapton-Based) Microsensor Arrays of High Stability for Cardiovascular Applications", *Journal of the Chemical Society, Faraday Transactions*, vol. 89, No. 2, 1993, pp. 361-367.
Liu, W., et al., "A Neuro-Stimulus Chip with Telemetry Unit for Retinal Prosthetic Device", *IEEE Journal of Solid-State Circuits*, vol. 35, No. 10, 2000, pp. 1487-1497.
Lohn, A., et al., "A Knowledge-Based System for Real-Time Validation of Calibrations and Measurements", *Chemometrics and Intelligent Laboratory Systems*, vol. 46, 1999, pp. 57-66.
Lortz, J., et al., "What is Bluetooth? We Explain the Newest Short-Range Connectivity Technology", *Smart Computing Learning Series, Wireless Computing*, vol. 8, Issue 5, 2002, pp. 72-74.
Luong, J. H. T., et al., "Solubilization of Multiwall Carbon Nanotubes by 3-Aminopropyltriethoxysilane Towards the Fabrication of Electrochemical Biosensors with Promoted Electron Transfer". *Electroanalysis*, vol. 16, No. 1-2, 2004, pp. 132-139.
Lynch, S. M., et al., "Estimation-Based Model Predictive Control of Blood Glucose in Type I Diabetics: A Simulation Study", *Proceedings of the IEEE 27th Annual Northeast Bioengineering Conference*, 2001, pp. 79-80.
Lynn, P. A., "Recursive Digital Filters for Biological Signals", *Medical and Biological Engineering*, vol. 9, 1971, pp. 37-43.
Maidan, R., et al., "Elimination of Electrooxidizable Interferant-Produced Currents in Amperometric Biosensors", *Analytical Chemistry*, vol. 64, No. 23, 1992, pp. 2889-2896.
Makale, M. T., et al., "Tissue Window Chamber System for Validation of Implanted Oxygen Sensors", *American Journal of Physiology: Heart and Circulatory Physiology*, vol. 284, 2003, pp. H2288-H2294.
Malin, S. F., et al., "Noninvasive Prediction of Glucose by Near-Infrared Diffuse Reflectance Spectoscopy", *Clinical Chemistry*, vol. 45, No. 9, 1999, pp. 1651-1658.
Mancy, K. H., et al., "A Galvanic Cell Oxygen Analyzer", *Journal of Electroanalytical Chemistry*, vol. 4, 1962, pp. 65-92.
Maran, A., et al., "Continuous Glucose Monitoring in Diabetic Patients", *Diabetes Care*, vol. 25 No. 2, 2002, pp. 347-352.
March, W. F., "Dealing with the Delay", *Diabetes Technology & Therapeutics*, vol. 4, No. 1, 2002, pp. 49-50.
Marko-Varga, G., et al., "Enzyme-Based Biosensor as a Selective Detection Unit in Column Liquid Chromatography", *Journal of Chromatography A*, vol. 660, 1994, pp. 153-167.
Martin, R. F., "General Deming Regression for Estimating Systematic Bias and Its Confidence Interval in Method-Comparison Studies", *Clinical Chemistry*, vol. 46, No. 1, 2000, pp. 100-104.
Mastrototaro, J. J., "The MiniMed Continuous Glucose Monitoring System", *Diabetes Technology & Therapeutics*, vol. 2, Sup. 1, 2000, pp. S13-S18.
Mastrototaro, J. J., et al., "An Electroenzymatic Glucose Sensor Fabricated on a Flexible Substrate", *Sensors and Actuators B*, vol. 5, 1991, pp. 139-144.
Mastrototaro, J. J., et al., "Reproducibility of the Continuous Glucose Monitoring System Matches Previous Reports and the Intended Use of the Product" and "Response to Mastrototaro and Gross", *Diabetes Care*, vol. 26, No. 1, 2003, pp. 256-257.
Mauras, N., et al., "Lack of Accuracy of Continuous Glucose Sensors in Healthy, Nondiabetic Children: Results of the Diabetes Research in Children Network (DirecNet) Accuracy Study," *Journal of Pediatrics*, 2004, pp. 770-775.
Mazze, R. S., et al., "Characterizing Glucose Exposure for Individuals with Normal Glucose Tolerance Using Continuous Glucose Monitoring and Ambulatory Glucose Profile Analysis", *Diabetes Technology & Therapeutics*, vol. 10, No. 3, 2008, pp. 149-159.
McCartney, L. J., et al., "Near-Infrared Fluorescence Lifetime Assay for Serum Glucose Based on Allophycocyanin-Labeled Concanavalin A", *Analytical Biochemistry*, vol. 292, 2001, pp. 216-221.
McGarraugh, G., et al., "Glucose Measurements Using Blood Extracted from the Forearm and the Finger", *TheraSense, Inc.*, 2000, 16 pp. 1-16.
McGarraugh, G., et al., "Physiological Influences on Off-Finger Glucose Testing", *Diabetes Technology & Therapeutics*, vol. 3, No. 3, 2001, pp. 367-376.
McGrath, M. J., et al., "The Use of Differential Measurements with a Glucose Biosensor for Interference Compensation During Glucose Determinations by Flow Injection Analysis", *Biosensors & Bioelectronics*, vol. 10, 1995, pp. 937-943.
McKean, B. D., et al., "A Telemetry-Instrumentation System for Chronically Implanted Glucose and Oxygen Sensors", *IEEE Transactions on Biomedical Engineering*, vol. 35, No. 7, 1988, pp. 526-532.
McNeil, C. J., et al., "Thermostable Reduced Nicotinamide Adenine Dinucleotide Oxidase: Application to Amperometric Enzyme Assay", *Analytical Chemistry*, vol. 61, No. 1, 1989, pp. 25-29.
Memoli, A., et al., "A Comparison Between Different Immobilized Glucoseoxidase-Based Electrodes", *Journal of Pharmaceutical and Biomedical Analysis*, vol. 29, 2002, pp. 1045-1052.
Metzger, M., et al., "Reproducibility of Glucose Measurements Using the Glucose Sensor", *Diabetes Care*, vol. 25, No. 6, 2002, pp. 1185-1191.
Meyerhoff, C., et al., "On Line Continuous Monitoring of Subcutaneous Tissue Glucose in Men by Combining Portable Glucosensor with Microdialysis", *Diabetologia*, vol. 35, 1992, pp. 1087-1092.
Miller, K. M., et al., "Generation of IL1-like Activity in Response to Biomedical Polymer Implants: A Comparison of In Vitro and In Vivo Models", *Journal of Biomedical Materials Research*, vol. 23, 1989, pp. 1007-1026.
Miller, K. M., et al., "Human Monocyte/Macrophage Activation and Interleukin 1 Generation by Biomedical Polymers", *Journal of Biomedical Materials Research*, vol. 22, 1988, pp. 713-731.
Miller, K. M., et al., "In Vitro Stimulation of Fibroblast Activity by Factors Generated from Human Monocytes Activated by Biomedical Polymers", *Journal of Biomedical Materials Research*, vol. 23, 1989, pp. 911-930.
Minimed Technologies, "Tape Tips and Other Infusion Site Information", 1995.
Miyawaki, O., et al., "Electrochemical and Glucose Oxidase Coenzyme Activity of Flavin Adenine Dinucleotide Covalently Attached to Glassy Carbon at the Adenine Amino Group", *Biochimica et Biophysica Acta*, vol. 838, 1985, pp. 60-68.

(56) **References Cited**

OTHER PUBLICATIONS

Moatti-Sirat, D., et al., "Evaluating In Vitro and In Vivo the Interference of Ascorbate and Acetaminophen on Glucose Detection by a Needle-Type Glucose Sensor", *Biosensors & Bioelectronics*, vol. 7, 1992, pp. 345-352.
Moatti-Sirat, D., et al., "Reduction of Acetaminophen Interference in Glucose Sensors by a Composite Nafion Membrane: Demonstration in Rats and Man", *Diabetologia*, vol. 37, 1994, pp. 610-616.
Moatti-Sirat, D., et al., "Towards Continuous Glucose Monitoring: In Vivo Evaluation of a Miniaturized Glucose Sensor Implanted for Several Days in Rat Subcutaneous Tissue", *Diabetologia*, vol. 35, 1992, pp. 224-330.
Monsod, T. P., et al., "Do Sensor Glucose Levels Accurately Predict Plasma Glucose Concentrations During Hypoglycemia and Hyperinsulinemia?" *Diabetes Care*, vol. 25, No. 5, 2002, pp. 889-893.
Moussy, F., et al., "A Miniaturized Nafion-Based Glucose Sensor: In Vitro and In Vivo Evaluation in Dogs", *The International Journal of Artificial Organs*, vol. 17, No. 2, 1994, pp. 88-94.
Mowery, K. A., et al., "Preparation and Characterization of Hydrophobic Polymeric Films that are Thromboresistant via Nitric Oxide Release", *Biomaterials*, vol. 21, 2000, pp. 9-21.
Murphy, S. M., et al., "Polymer Membranes in Clinical Sensor Applications", *Biomaterials*, vol. 13, No. 14, 1992, pp. 979-990.
Nagy, G., et al., "A New Type of Enzyme Electrode: The Ascorbic Acid Eliminator Electrode", *Life Sciences*, vol. 31, No. 23, 1982, pp. 2611-2616.
Nakamura, S., et al., "Effect of Periodate Oxidation on the Structure and Properties of Glucose Oxidase", *Biochimica et Biophysica Acta.*, vol. 445, 1976, pp. 294-308.
Nam, Y. S., et al., "A Novel Fabrication Method of Macroporous Biodegradable Polymer Scaffolds Using Gas Foaming Salt as a Porogen Additive", *Journal of Biomedical Materials Research*, vol. 53, 2000, pp. 1-7.
Nappholz, T. A., "Programmers for Implants: A Need for Radical Change", *18th Annual International Conference of the IEEE Engineering in Medicine and Biology Society*, Amsterdam, 1996, pp. 1274-1275.
Narasimham, K., et al., "p-Benzoquinone Activation of Metal Oxide Electrodes for Attachment of Enzymes", *Enzyme and Microbial Technology*, vol. 7, 1985, pp. 283-286.
Neuburger, G. G., et al., "Pulsed Amperometric Detection of Carbohydrates at Gold Electrodes with a Two-Step Potential Waveform", *Analytical Chemistry*, vol. 59, No. 1, 1987, pp. 150-154.
Ohara, T. J., "Osmium Bipyridyl Redox Polymers Used in Enzyme Electrodes", *Platinum Metals Review*, vol. 39, No. 2, 1995, pp. 54-62.
Ohara, T. J., et al., "'Wired' Enzyme Electrodes for Amperometric Determination of Glucose or Lactate in the Presence of Interfering Substances", *Analytical Chemistry*, vol. 66, No. 15, 1994, pp. 2451-2457.
Ohara, T. J., et al., "Glucose Electrodes Based on Cross-Linked $[Os(bpy)_2C1]^{+/2+}$ Complexed Poly(1-Vinylimidazole) Films", *Analytical Chemistry*, vol. 65, No. 23, 1993, pp. 3512-3517.
Okuda, J., et al., "Mutarotase Effect on Micro Determinations of D-Glucose and Its Anomers with β-D-Glucose Oxidase", *Analytical Biochemistry*, vol. 43, 1971, pp. 312-315.
Olievier, C. N., et al., "In Vivo Measurement of Carbon Dioxide Tension with a Miniature Electrodes", *Pflugers Archiv: European Journal of Physiology*, vol. 373, 1978, pp. 269-272.
Paddock, R. M., et al., "Electrocatalytic Reduction of Hydrogen Peroxide via Direct Electron Transfer From Pyrolytic Graphite Electrodes to Irreversibly Adsorbed Cyctochrome C Peroxidase", *Journal of ElectroAnalytical Chemistry*, vol. 260, 1989, pp. 487-494.
Palleschi, G., et al., "A Study of Interferences in Glucose Measurements in Blood by Hydrogen Peroxide Based Glucose Probes", *Analytical Biochemistry*, vol. 159, 1986, pp. 114-121.
Palmisano, F., et al., "Simultaneous Monitoring of Glucose and Lactate by an Interference and Cross-Talk Free Dual Electrode Amperometric Biosensor Based on Electropolymerized Thin Films", *Biosensors & Bioelectronics*, vol. 15, 2000, pp. 531-539.
Pankratov, I., et al., "Sol-Gel Derived Renewable-Surface Biosensors", *Journal of ElectroAnalytical Chemistry*, vol. 393, 1995, pp. 35-41.
Panteleon, A. E., et al., "The Role of the Independent Variable to Glucose Sensor Calibration", *Diabetes Technology & Therapeutics*, vol. 5, No. 3, 2003, pp. 401-410.
Park, T., et al., "Sol-Gel-based Amperometric Glucose Biosensor Incorporating an Osmium Redox Polymer as Mediator", *Analytical Communications*, vol. 33, 1996, pp. 271-273.
Parker, R. S., et al., "A Model-Based Algorithm for Blood Glucose Control in Type I Diabetic Patients", *IEEE Transactions on Biomedical Engineering*, vol. 46, No. 2, 1999, pp. 148-157.
Patel, H., et al., "Amperometric Glucose Sensors Based on Ferrocene Containing Polymeric Electron Transfer Systems—A Preliminary Report", *Biosensors and Bioelectronics*, vol. 18, 2003, pp. 1073-1076.
Pathak, C., et al., "Rapid Photopolymerization of Immunoprotective Gels in Contact with Cells and Tissue", *Journal of the American Chemical Society*, vol. 114, No. 21, 1992, pp. 8311-8312.
Petrou, P. S., et al., "Microdevice with Integrated Dialysis Probe and Biosensor Array for Continuous Multi-Analyte Monitoring", *Biosensors & Bioelectronics*, vol. 18, 2003, pp. 613-619.
Pichert, J. W., et al., "Issues for the Coming Age of Continuous Glucose Monitoring", *The Diabetic Educator*, vol. 26, No. 6, 2000, pp. 969-980.
Pickup, J. C., et al., "Responses and Calibration of Amperometric Glucose Sensors Implanted in the Subcutaneous Tissue of Man", *Acta Diabetologica*, vol. 30, 1993, pp. 143-148.
Pickup, J., "Developing Glucose Sensors for In Vivo Use", *Tibtech*, vol. 11, 1993, pp. 285-291.
Pickup, J., et al., "Implantable Glucose Sensors: Choosing the Appropriate Sensing Strategy", *Biosensors*, vol. 3, 1987/88, pp. 335-346.
Pickup, J., et al., "In Vivo Molecular Sensing in Diabetes Mellitus: An Implantable Glucose Sensor with Direct Electron Transfer", *Diabetologia*, vol. 32, 1989, pp. 213-217.
Pickup, J., et al., "Potentially-Implantable, Amperometric Glucose Sensors with Mediated Electron Transfer: Improving the Operating Stability", *Biosensors*, vol. 4, 1989, pp. 109-119.
Pishko, M. V., et al., "Amperometric Glucose Microelectrodes Prepared Through Immobilization of Glucose Oxidase in Redox Hydrogels", *Analytical Chemistry*, vol. 63, No. 20, 1991, pp. 2268-2272.
Pitzer, K. R., et al., "Detection of Hypoglycemia with the GlucoWatch Biographer", *Diabetes Care*, vol. 24, No. 5, 2001, pp. 881-885.
Poirier, J. Y., et al., "Clinical and Statistical Evaluation of Self-Monitoring Blood Glucose Meters", *Diabetes Care*, vol. 21, No. 11, 1998, pp. 1919-1924.
Poitout, V., et al., "A Glucose Monitoring System for on Line Estimation in Man of Blood Glucose Concentration Using a Miniaturized Glucose Sensor Implanted in the Subcutaneous Tissue and a Wearable Control Unit", *Diabetolgia*, vol. 36, 1993, pp. 658-663.
Poitout, V., et al., "Calibration in Dogs of a Subcutaneous Miniaturized Glucose Sensor Using a Glucose Meter for Blood Glucose Determination", *Biosensors & Bioelectronics*, vol. 7, 1992, pp. 587-592.
Poitout, V., et al., "In Vitro and In Vivo Evaluation in Dogs of a Miniaturized Glucose Sensor", *ASAIO Transactions*, vol. 37, No. 3, 1991, pp. M298-M300.
Pollak, A., et al., "Enzyme Immobilization by Condensation Copolymerization into Cross-Linked Polyacrylamide Gels", *Journal of the American Chemical Society*, vol. 102, No. 20, 1980, pp. 6324-6336.
Poscia, A., et al., "A Microdialysis Technique for Continuous Subcutaneous Glucose Monitoring in Diabetic Patients (Part 1)", *Biosensors & Bioelectronics*, vol. 18, 2003, pp. 891-898.
Postlethwaite, T. A., et al., "Interdigitated Array Electrode as an Alternative to the Rotated Ring—Disk Electrode for Determination of the Reaction Products of Dioxygen Reduction", *Analytical Chemistry*, vol. 68, No. 17, 1996, pp. 2951-2958.
Prabhu, V. G., et al., "Electrochemical Studies of Hydrogen Peroxide at a Platinum Disc Electrode", *Electrochimica Acta*, vol. 26, No. 6, 1981, pp. 725-729.

(56) **References Cited**

OTHER PUBLICATIONS

Quinn, C. A. P., et al., "Biocompatible, Glucose-Permeable Hydrogel for In Situ Coating of Implantable Biosensors", *Biomaterials*, vol. 18, No. 24, 1997, pp. 1665-1670.
Quinn, C. P., et al., "Kinetics of Glucose Delivery to Subcutaneous Tissue in Rats Measured with 0.3-mm Amperometric Microsensors", *The American Physiological Society*, 1995, E155-E161.
Ratner, B. D., "Reducing Capsular Thickness and Enhancing Angeiogenesis Around Implant Drug Release Systems", *Journal of Controlled Release*, vol. 78, 2002, pp. 211-218.
Reach, G., "Which Threshold to Detect Hypoglycemia?", *Diabetes Care*, vol. 24, No. 5, 2001, pp. 803-804.
Reach, G., et al., "A Method of Evaluating In Vivo the Functional Characteristics of Glucose Sensors", *Biosensors 2*, 1986, pp. 211-220.
Reach, G., et al., "Can Continuous Glucose Monitoring Be Used for the Treatment of Diabetes?", *Analytical Chemistry*, vol. 64, No. 6, 1992, pp. 381-386.
Reach, G., et al., "Continuous Glucose Sensing for the Treatment of Diabetes Mellitus", *Analysis Magazine*, vol. 21, No. 2, 1993, pp. M35-M39.
Reach, G., et al., "Letters to the Editor: Re: Diabetes Technology & Therapeutics, 2000; 2:49-56", *Diabetes Technology & Therapeutics*, vol. 3, No. 1, 2001, pp. 129-131.
Rebrin, K., et al., "Automated Feedback Control of Subcutaneous Glucose Concentration in Diabetic Dogs", *Diabetologia*, vol. 32, 1989, pp. 573-576.
Rebrin, K., et al., "Subcutaneous Glucose Predicts Plasma Glucose Independent of Insulin: Implications for Continuous Monitoring", *The American Physiological Society*, 1999, pp. E561-E571.
Reusch, W., "Other Topics: Organometallic Chemistry: Organometallic Compounds: Main Group Organometallic Compounds," *Virtual Textbook of Organic Chemistry*, 1999, Rev. 2007, 25 pages.
Rhodes, R. K., et al., "Prediction of Pocket-Portable and Implantable Glucose Enzyme Electrode Performance from Combined Species Permeability and Digital Simulation Analysis", *Analytical Chemistry*, vol. 66, No. 9, 1994, pp. 1520-1529.
Rigla, M, et al., "Real-Time Continuous Glucose Monitoring Together with Telemedical Assistance Improves Glycemic Control and Glucose Stability in Pump-Treated Patients", *Diabetes Technology & Therapeutics*, vol. 10, No. 3, 2008, pp. 194-199.
Rinken, T., et al., "Calibration of Glucose Biosensors by Using Pre-Study State Kinetic Data", *Biosensors & Bioelectronics*, vol. 13, 1998, pp. 801-807.
Roe, J. N., et al., "Bloodless Glucose Measurements", *Critical Review in Therapeutic Drug Carrier Systems*, vol. 15, Issue 3, 1998, pp. 199-241.
Sacks (Ed), "Guidelines and Recommendations for Laboratory Analysis in the Diagnosis and Management of Diabetes Mellitus," *The National Academy of Clinical Biochemistry Presents Laboratory Medicine Practice Guidelines*, vol. 13, 2002, pp. 8-11, 21-23, 52-56, 63.
Sakakida, M., et al., "Development of Ferrocene-Mediated Needle-Type Glucose Sensor as a Measure of True Subcutaneous Tissue Glucose Concentrations", *Artificial Organs Today*, vol. 2, No. 2, 1992, pp. 145-158.
Sakakida, M., et al., "Ferrocene-Mediated Needle-Type Glucose Sensor Covered with Newly Designed Biocompatible Membrane", *Sensors and Actuators B*, vol. 13-14, 1993, pp. 319-322.
Salehi, C., et al., "A Telemetry-Instrumentation System for Long-Term Implantable Glucose and Oxygen Sensors", *Analytical Letters*, vol. 29, No. 13, 1996, pp. 2289-2308.
Samuels, G. J., et al., "An Electrode-Supported Oxidation Catalyst Based on Ruthenium (IV). pH 'Encapsulation' in a Polymer Film", *Journal of the American Chemical Society*, vol. 103, No. 2, 1981, pp. 307-312.
Sansen, W., et al., "A Smart Sensor for the Voltammetric Measurement of Oxygen or Glucose Concentrations", *Sensors and Actuators B1*, 1990, pp. 298-302.
Sansen, W., et al., "Chapter 12: Glucose Sensor with Telemetry System", *Implantable Sensors for Closed-Loop Prosthetic Systems*, 1985, pp. 167-175.
Sasso, S. V., et al., "Electropolymerized 1,2-Diaminobenzene as a Means to Prevent Interferences and Fouling and to Stabilize Immobilized Enzyme in Electrochemical Biosensors", *Analytical Chemistry*, vol. 62, No. 11, 1990, pp. 1111-1117.
Scheller, F. W., et al., "Second Generation Biosensors," *Biosensors & Bioelectronics*, vol. 6, 1991, pp. 245-253.
Scheller, F., et al., "Enzyme Electrodes and Their Application", *Philosophical Transactions of The Royal Society of London B*, vol. 316, 1987, pp. 85-94.
Schmehl, R. H., et al., "The Effect of Redox Site Concentration on the Rate of Mediated Oxidation of Solution Substrates by a Redox Copolymer Film", *Journal of ElectroAnalytical Chemistry*, vol. 152, 1983, pp. 97-109.
Schmidt, F. J., et al., "Calibration of a Wearable Glucose Sensor", *The International Journal of Artificial Organs*, vol. 15, No. 1, 1992, pp. 55-61.
Schmidt, F. J., et al., "Glucose Concentration in Subcutaneous Extracellular Space", *Diabetes Care*, vol. 16, No. 5, 1993, pp. 695-700.
Schmidtke, D. W., et al., "Accuracy of the One-Point In Vivo Calibration of 'Wired' Glucose Oxidase Electrodes Implanted in Jugular Veins of Rats in Periods of Rapid Rise and Decline of the Glucose Concentration", *Analytical Chemistry*, vol. 70, No. 10, 1998, pp. 2149-2155.
Schmidtke, D. W., et al., "Measurement and Modeling of the Transient Difference Between Blood and Subcutaneous Glucose Concentrations in the Rat After Injection of Insulin", *Proceedings of the National Academy of Sciences*, vol. 95, 1998, pp. 294-299.
Schoemaker, M., et al., "The SCHM1 System: Subcutaneous Continuous Glucose Monitoring Based on Microdialysis Technique", *Diabetes Technology & Therapeutics*, vol. 5, No. 4, 2003, pp. 599-608.
Schwarz, M., et al., "Micro Implantable Visual Prostheses", *1st Annual International IEEE-EMBS Special Topic Conference on Microtechnologies in Medicine & Biology*, Lyon, France, 2000, pp. 461-465.
Selam, J. L., "Management of Diabetes with Glucose Sensors and Implantable Insulin Pumps: From the Dream of the 60s to the Realities of the 90s", *American Society for Artificial Internal Organs Journal*, 1997, pp. 137-142.
Service, F. J., et al., "Mean Amplitude of Glycemic Excursions, a Measure of Diabetic Instability", *Diabetes*, vol. 19, No. 9, 1970, pp. 644-655.
Service, R. F., "Can Sensors Make a Home in the Body?", *Science*, vol. 297, 2002, pp. 962-963.
Shaw, G. W., et al., "In Vitro Testing of a Simply Constructed, Highly Stable Glucose Sensor Suitable for Implantation in Diabetic Patients", *Biosensors & Bioelectronics*, vol. 6, 1991, pp. 401-406.
Shichiri, M., et al., "Glycaemic Control in Pancreatectomized Dogs with a Wearable Artificial Endocrine Pancreas", *Diabetologia*, vol. 24, 1983, pp. 179-184.
Shichiri, M., et al., "In Vivo Characteristics of Needle-Type Glucose Sensor—Measurements of Subcutaneous Glucose Concentrations in Human Volunteers", *Hormone and Metabolic Research Supplement Series*, vol. 20, 1988, pp. 17-20.
Shichiri, M., et al., "Membrane Design for Extending the Long-Life of an Implantable Glucose Sensor", *Diabetes Nutrition and Metabolism*, vol. 2, 1989, pp. 309-313.
Shichiri, M., et al., "Needle-type Glucose Sensor for Wearable Artificial Endocrine Pancreas", *Implantable Sensors for Closed-Loop Prosthetic Systems*, Chapter 15, 1985, pp. 197-210.
Shichiri, M., et al., "Telemetry Glucose Monitoring Device With Needle-Type Glucose Sensor: A Useful Tool for Blood Glucose Monitoring in Diabetic Individuals", *Diabetes Care*, vol. 9, No. 3, 1986, pp. 298-301.
Shichiri, M., et al., "Wearable Artificial Endocrine Pancreas With Needle-Type Glucose Sensor", *The Lancet*, 1982, pp. 1129-1131.

(56) **References Cited**

OTHER PUBLICATIONS

Shults, M. C., et al., "A Telemetry-Instrumentation System for Monitoring Multiple Subcutaneously Implanted Glucose Sensors", *IEEE Transactions on Biomedical Engineering*, vol. 41, No. 10, 1994, pp. 937-942.
Sieminski, A. L., et al., "Biomaterial-Microvasculature Interactions", *Biomaterials*, vol. 21, 2000, pp. 2233-2241.
Sittampalam, G., et al., "Surface-Modified Electrochemical Detector for Liquid Chromatography", *Analytical Chemistry*, vol. 55, No. 9, 1983, pp. 1608-1610.
Skoog, D. A., et al., "Evaluation of Analytical Data," *Fundamentals of Analytical Chemistry*, 1966, pp. 55.
Skyler, J. S., "The Economic Burden of Diabetes and the Benefits of Improved Glycemic Control: The Potential Role of a Continuous Glucose Monitoring System", *Diabetes Technology & Therapeutics*, vol. 2, Sup. 1, 2000, pp. S7-S12.
Soegijoko, S., et al., "External Artificial Pancreas: A New Control Unit Using Microprocessor", *Hormone and Metabolic Research Supplement Series*, vol. 12, 1982, pp. 165-169.
Sokol, L., et al , "Immobilized-Enzyme Rate-Determination Method for Glucose Analysis", *Clinical Chemistry*, vol. 26, No. 1, 1980, pp. 89-92.
Sokolov, S., et al., "Metrological Opportunities of the Dynamic Mode of Operating an Enzyme Amperometric Biosensor", *Medical Engineering and Physics*, vol. 17, No. 6, 1995, pp. 471-476.
Sproule, B. A., et al., "Fuzzy Pharmacology: Theory and Applications", *Trends in Pharmacological Sciences* vol. 23, No. 9, 2002, pp. 412-417.
Sprules, S. D., et al., "Evaluation of a New Disposable Screen-Printed Sensor Strip for the Measurement of NADH and Its Modification to Produce a Lactate Biosensor Employing Microliter Volumes", *Electroanalysis*, vol. 8, No. 6, 1996, pp. 539-543.
Sriyudthsak, M., et al., "Enzyme-Epoxy Membrane Based Glucose Analyzing System and Medical Applications", *Biosensors & Bioelectronics*, vol. 11, No. 8, 1996, pp. 735-742.
Stedman's Medical Dictionary, 26th Edition, 1995, pp. 665.
Steil, G. M., et al., "Determination of Plasma Glucose During Rapid Glucose Excursions with a Subcutaneous Glucose Sensor", *Diabetes Technology & Therapeutics*, vol. 5, No. 1, 2003, pp. 27-31.
Sternberg, F., et al., "Calibration Problems of Subcutaneous Glucosensors when Applied 'In-Situ' in Man", *Hormone and Metabolic Research*, vol. 26, 1994, pp. 523-526.
Sternberg, F., et al., "Does Fall in Tissue Glucose Precede Fall in Blood Glucose?" *Diabetologia*. vol. 29, 1996, pp. 609-612.
Sternberg, R., et al., "Covalent Enzyme Coupling on Cellulose Acetate Membranes for Glucose Sensor Development", *Analytical Chemistry*, vol. 60, No. 24, 1988, pp. 2781-2786.
Sternberg, R., et al., "Study and Development of Multilayer Needle-Type Enzyme-Based Glucose Microsensors", *Biosensors*, vol. 4, 1988, pp. 27-40.
Street, J. O., et al., "A Note on Computing Robust Regression Estimates Via Interactively Reweighted Least Squares", *The American Statistician*, vol. 42, No. 2, 1988, pp. 152-154.
Suaning, G. J., et al., "CMOS Neurostimulation ASIC with 100 Channels, Scaleable Output, and Bidirectional Radio-Frequency Telemetry" *IEEE Transactions on Biomedical Engineering*, vol. 48, No. 2, 2001, pp. 248-260.
Suekane, M., "Immobilization of Glucose Isomerase", *Zettschrift fur Allgemeine Mikrobiologie*, vol. 22, No. 8, 1982, pp. 565-576.
Tajima, S., et al., "Simultaneous Determination of Glucose and 1,5-Anydroglucitol", *Chemical Abstracts*, vol. 111, No. 25, 1989, pp. 394.
Takamura, A., et al., Drug release from Poly(vinyl alcohol) Gel Prepared by Freeze-Thaw Procedure, *Journal of Controlled Release*, vol. 20, 1992, pp. 21-27.
Tamura, T., et al., "Preliminary Study of Continuous Glucose Monitoring with a Microdialysis Technique and a Null Method—a Numerical Analysis", *Frontiers Medical and Biological Engineering*, vol. 10, No. 2, 2000, pp. 147-156.
Tanenberg, R. J., et al., "Continuous Glucose Monitoring System: A New Approach to the Diagnosis of Diabetic Gastroparesis", *Diabetes Technology & Therapeutics*, vol. 2, Sup. 1, 2000, pp. S73-S80.
Tang, L, et al., "Fibrin(ogen) Mediates Acute Inflammatory Responses to Biomaterials", *Journal of Experimental Medicine*, vol. 178, 1993, pp. 2147-2156.
Tang, L., et al., "Inflammatory Responses to Biomaterials", *American Journal of Clinical Pathology*, vol. 103, No. 4, 1995, pp. 466-471.
Tang, L., et al., "Mast Cells Mediate Acute Inflammatory Responses to Implanted Biomaterials", *Proceedings of the National Academy of Sciences USA*, vol. 95, 1998, pp. 8841-8846.
Tang, L., et al., "Molecular Determinants of Acute Inflammatory Responses to Biomaterials", *Journal of Clinical Investigation*, vol. 97, No. 5, 1996, pp. 1329-1334.
Tang, Z., et al., "Data Transmission from an Implantable Biotelemeter by Load-Shift Keying Using Circuit Configuration Modulator", *IEEE Transactions on Biomedical Engineering*, vol. 42, No. 5, 1995, pp. 524-528.
Tarasevich, M. R., "Bioelectrocatalysis", *Comprehensive Treatise of Electrochemistry*, vol. 10, 1985, pp. 231-295.
Tatsuma, T., et al., "Enzyme Monolayer—and Bilayer-Modified Tin Oxide Electrodes for the Determination of Hydrogen Peroxide and Glucose", *Analytical Chemistry*, vol. 61, No. 21, 1989, pp. 2352-2355.
Taylor, C., et al., "'Wiring' of Glucose Oxidase Within a Hydrogel Made with Polyvinyl Imidazole Complexed with [(Os-4,4'-dimethoxy-2,2'-bipyridine)C1]$^{+/2+}$", *Journal of ElectroAnalytical Chemistry*, vol. 396, 1995, pp. 511-515.
Thome-Duret, V., et al., "Continuous Glucose Monitoring in the Free-Moving Rat", *Metabolism*, vol. 47, No. 7, 1998, pp. 799-803.
Thome-Duret, V., et al., "Modification of the Sensitivity of Glucose Sensor Implanted into Subcutaneous Tissue", *Diabetes & Metabolism*, vol. 22, No. 3, 1996, pp. 174-178.
Thompson, M., et al., "In Vivo Probes: Problems and Perspectives", *Clinical Biochemistry*, vol. 19, 1986, pp. 255-261.
Tibell, A., et al., "Survival of Macroencapsulated Allogeneic Parathyriod Tissue One Year After Transplantation in Nonimmunosuppressed Humans", *Cell Transplantation*, vol. 10, No. 7, 2001, pp. 591-599.
Tierney, M. J., "The GlucoWatch® Biographer: A Frequent, Automatic and Noninvasive Glucose Monitor", *Annals of Medicine*, vol. 32, 2000, pp. 632-641.
Tierney, M. J., et al., "Effect of Acetaminophen on the Accuracy of Glucose Measurements Obtained with the GlucoWatch Biographer", *Diabetes Technology & Therapeutics*, vol. 2, No. 2, 2000, pp. 199-207.
Tilbury, J. B., et al., "Receiver Operating Characteristic Analysis for Intelligent Medical Systems—A New Approach for Finding Confidence Intervals", *IEEE Transactions on Biomedical Engineering*, vol. 47, No. 7, 2000, pp. 952-963.
Trajanoski, Z., et al., "Neural Predictive Controller for Insulin Delivery Using the Subcutaneous Route", *IEEE Transactions on Biomedical Engineering*, vol. 45, No. 9, 1998, pp. 1122-1134.
Trecroci, D., "A Glimpse Into the Future: Continuous Monitoring of Glucose with a Microfiber", *Diabetes Interview*, 2002, pp. 42-43.
Trojanowicz, M., et al., "Enzyme Entrapped Polypyrrole Modified Electrode for Flow-Injection Determination of Glucose", *Biosensors & Bioelectronics*, vol. 5, 1990, pp. 149-156.
Tsalikian, E., et al., "Accuracy of the GlucoWatch G2® Biographer and the Continuous Glucose Monitoring System During Hypoglycemia: Experience of the Diabetes Research in Children Network", *Diabetes Care*, vol. 27, No. 3, 2004, pp. 722-726.
Turner, A., et al., "Diabetes Mellitus: Biosensors for Research and Management", *Biosensors*, vol. 1, 1985, pp. 85-115.
Turner, R. F., et al., "A Biocompatible Enzyme Electrode for Continuous in vivo Glucose Monitoring in Whole Blood", *Sensors and Actuators B*, vol. 1, 1990, pp. 561-564.
Tuzhi, P., et al., "Constant Potential Pretreatment of Carbon Fiber Electrodes for In Vivo Electrochemistry", *Analytical Letters*, vol. 24, No. 6, 1991, pp. 935-945.

(56) **References Cited**

OTHER PUBLICATIONS

U.S. Department of Health and Human Services, "Off-The-Shelf-Software Use in Medical Devices", *Guidance for Industry, FDA Reviewers and Compliance on*, 1999, pp. 1-26.
Umana, M., "Protein-Modified Electrochemically Active Biomaterial Surface", *U.S. Army Research Office, Analytical and Chemical Sciences Research Triangle Institute*, 1988, pp. 1-9.
Updike, S. J., et al., "A Subcutaneous Glucose Sensor with Improved Longevity, Dynamic Range, and Stability of Calibration", *Diabetes Care*, vol. 23, No. 2, 2000, pp. 208-214.
Updike, S. J., et al., "Continuous Glucose Monitor Based on an Immobilized Enzyme Electrode Detector", *The Journal of Laboratory and Clinical Medicine*, vol. 93, No. 4, 1979, pp. 518-527.
Updike, S. J., et al., "Enzymatic Glucose Sensors: Improved Long-Term Performance In Vitro and In Vivo", *American Society for Artificial Internal Organs Journal*, 1994, pp. 157-163.
Updike, S. J., et al., "Implanting the Glucose Enzyme Electrode: Problems, Progress, and Alternative Solutions", *Diabetes Care*, vol. 5, No. 3, 1982, pp. 207-212.
Updike, S. J., et al., "Principles of Long-Term Fully Implanted Sensors with Emphasis on Radiotelemetric Monitoring of Blood Glucose from Inside a Subcutaneous Foreign Body Capsule (FBC)", *Biosensors in the Body: Continuous in vivo Monitoring*, Chapter 4, 1997, pp. 117-137.
Updike, S. J., et al., "The Enzyme Electrode", *Nature*, vol. 214, 1967, pp. 986-988.
Urban, G., et al., "Miniaturized Thin-Film Biosensors Using Covalently Immobilized Glucose Oxidase", *Biosensors & Bioelectronics*, vol. 6, 1991, pp. 555-562.
Valdes, T. I., et al., "In Vitro and In Vivo Degradation of Glucose Oxidase Enzyme Used for an Implantable Glucose Biosensor", *Diabetes Technology & Therapeutics*, vol. 2, No. 3, 2000, pp. 367-376.
Varalli, M., et al., "A Microdialysis Technique for Continuous Subcutaneous Glucose Monitoring in Diabetic Patients (Part 2)", *Biosensors & Bioelectronics*, vol. 18, 2003, pp. 899-905.
Velho, G., et al., "In Vitro and In Vivo Stability of Electrode Potentials in Needle-Type Glucose Sensors", *Diabetes*, vol. 38, No. 2, 1989, pp. 164-171.
Velho, G., et al., "Strategies for Calibrating a Subcutaneous Glucose Sensor", *Biomedica Biochimica Acta*, vol. 48, 1989, pp. 957-964.
Von Woedtke, T., et al., "In Situ Calibration of Implanted Electrochemical Glucose Sensors", *Biomedica Biochimica Acta*, vol. 48, 1989, pp. 943-952.
Vreeke, M. S., et al., "Hydrogen Peroxide Electrodes Based on Electrical Connection of Redox Centers of Various Peroxidases to Electrodes through a Three-Dimensional Electron-Relaying Polymer Network", *Diagnostic Biosensors Polymers*, Chapter 15, 1993, pp. 180-193.
Vreeke, M., et al., "Hydrogen Peroxide and β-Nicotinamide Adenine Dinucleotide Sensing Amperometric Electrodes Based on Electrical Connection of Horseradish Peroxidase Redox Centers to Electrodes through a Three-Dimensional Electron Relaying Polymer Network", *Analytical Chemistry*, vol. 64, No. 24, 1992, pp. 3084-3090.
Wade Jr., L. G., "Chapter 17: Reactions of Aromatic Compounds", *Organic Chemistry, Sixth Edition*, 2006, pp. 762-763.
Wagner, J. G., et al., "Continuous Amperometric Monitoring of Glucose in a Brittle Diabetic Chimpanzee with a Miniature Subcutaneous Electrode", *Proceedings of the National Academy of Sciences USA*, 1998, pp. 6379-6382.
Wang, D. L., et al., "Miniaturized Flexible Amperometric Lactate Probe", *Analytical Chemistry*, vol. 65, No. 8, 1993, pp. 1069-1073.
Wang, J., et al., "Activation of Glassy Carbon Electrodes by Alternating Current Electrochemical Treatment", *Analytica Chimica Acta*, vol. 167, 1985, pp. 325-334.
Wang, J., et al., "Amperometric Biosensing of Organic Peroxides with Peroxidase-Modified Electrodes", *Analytica Chimica Acta*, vol. 254, 1991, pp. 81-88.
Wang, J., et al., "Highly Selective Membrane-Free, Mediator-Free Glucose Biosensor", *Analytical Chemistry*, vol. 66, No. 21, 1994, pp. 3600-3606.
Wang, J., et al., "Screen-Printable Sol-Gel Enzyme-Containing Carbon Inks", *Analytical Chemistry*, vol. 68, No. 15, 1996, pp. 2705-2708.
Wang, J., et al., "Sol-Gel-Derived Metal-Dispersed Carbon Composite Amperometric Biosensors", *Electroanalysis*, vol. 9, No. 1, 1997, pp. 52-55.
Wang, X., et al., "Improved Ruggedness for Membrane-Based Amperometric Sensors Using a Pulsed Amperometric Method", *Analytical Chemistry*, vol. 69, No. 21, 1997, pp. 4482-4489.
Ward, W. K., et al., "A New Amperometric Glucose Microsensor: In Vitro and Short-Term In Vivo Evaluation", *Biosensors & Bioelectronics*, vol. 17, 2002, pp. 181-189.
Ward, W. K., et al., "Assessment of Chronically Implanted Subcutaneous Glucose Sensors in Dogs: The Effect of Surrounding Fluid Masses", *American Society for Artificial Internal Organs Journal*, 1999, pp. 555-561.
Ward, W. K., et al., "Rise in Background Current Over Time in a Subcutaneous Glucose Sensor in the Rabbit: Relevance to Calibration and Accuracy", *Biosensors & Bioelectronics*, vol. 15, 2000, pp. 53-61.
Ward, W. K., et al., "Understanding Spontaneous Output Fluctuations of an Amperometric Glucose Sensor: Effect of Inhalation Anesthesia and Use of a Nonenzyme Containing Electrode", *American Society for Artificial Internal Organs Journal*, 2000, pp. 540-546.
Wientjes, K. J. C., *Development of a Glucose Sensor for Diabetic Patients*, 2000, pp. vii-xiii.
Wilkins, E., et al., "Glucose Monitoring: State of the Art and Future Possibilities", *Medical Engineering and Physics*, vol. 18, No. 4, 1995, pp. 273-288.
Wilkins, E., et al., "Integrated Implantable Device for Long-Term Glucose Monitoring", *Biosensors & Bioelectronics*, vol. 10, 1995, pp. 485-494.
Williams, D. L., et al., "Electrochemical-Enzymatic Analysis of Blood Glucose and Lactate", *Analytical Chemistry*, vol. 42, No. 1, 1970, pp. 118-121.
Wilson, G. S., et al., "Enzyme-Based Biosensors for In Vivo Measurements", *Chemical Reviews*, vol. 100, No. 7, 2000, pp. 2693-2704.
Wilson, G. S., et al., "Progress Toward the Development of an Implantable Sensor for Glucose", *Clinical Chemistry*, vol. 38, No. 9, 1992, pp. 1613-1617.
Wood, W. D., et al., "Hermetic Sealing with Epoxy", *Mechanical Engineering*, 1990, pp. 46-48.
Wu, H., et al., "In Situ Electrochemical Oxygen Generation with an Immunoisolation Device", *Annals of the new York Academy of Sciences*, vol. 875, 1999, pp. 105-125.
Yabuki, S., et al., "Electro-Conductive Enzyme Membrane", *Journal of the Chemical Society, Chemical Communications*, 1989, pp. 945-946.
Yang, C., et al., "A Comparison of Physical Properties and Fuel Cell Performance of Nafion and Zirconium Phosphate/Nafion Composite Membranes," *Journal of Membrane Science*, vol. 237, 2004, pp. 145-161.
Yang, L., et al., "Determination of Oxidase Enzyme Substrates Using Cross-Flow Thin-Layer Amperometry", *Electroanalysis*, vol. 8, No. 8-9, 1996, pp. 716-721.
Yang, Q., et al., "Development of Needle-Type Glucose Sensor with High Selectivity", *Sensors and Actuators B*, vol. 46, 1998, pp. 249-256.
Yang, S., et al., "A Glucose Biosensor Based on an Oxygen Electrode: In-Vitro Performances in Model Buffer Solution and in Blood Plasma", *Biomedical Instrumentation & Technology*, vol. 30 No. 1, 1996, pp. 55-61.
Yao, S. J., et al., "The Interference of Ascorbate and Urea in Low-Potential Electrochemical Glucose Sensing", *Proceedings of the Twelfth Annual International Conference of the IEEE Engineering in Medicine and Biology Society*, vol. 12, Part 2, 1990, pp. 487-489.
Yao, T., "A Chemically-Modified Enzyme Membrane Electrode as an Amperometric Glucose Sensor", *Analytica Chimica Acta*, vol. 148, 1983, pp. 27-33.
Ye, L., et al., "High Current Density 'Wired' Quinoprotein Glucose Dehydrogenase Electrode", *Analytical Chemistry*, vol. 65, No. 3, 1993, pp. 238-241.

(56) **References Cited**

OTHER PUBLICATIONS

Yildiz, A., et al., "Evaluation of an Improved Thin-Layer Electrode", *Analytical Chemistry*, vol. 40, No. 7, 1968, pp. 1018-1024.
Zamzow, K., et al., "New Wearable Continuous Blood Glucose Monitor (BGM) and Artificial Pancreas (AP)", *Diabetes*, vol. 39, 1990, pp. 5A-20A.
Zavalkoff, S. R., et al., "Evaluation of Conventional Blood Glucose Monitoring as an Indicator of Integrated Glucose Values Using a Continuous Subcutaneous Sensor", *Diabetes Care*, vol. 25, No. 9, 2002, pp. 1603-1606.
Zhang, Y., et al., "Application of Cell Culture Toxicity Tests to the Development of Implantable Biosensors", *Biosensors & Bioelectronics*, vol. 6, 1991, pp. 653-661.
Zhang, Y., et al., "Elimination of the Acetaminophen Interference in an Implantable Glucose Sensor", *Analytical Chemistry*, vol. 66, No. 7, 1994, pp. 1183-1188.
Zhu, J., et al., "Planar Amperometric Glucose Sensor Based on Glucose Oxidase Immobilized by Chitosan Film on Prussian Blue Layer", *Sensors*, vol. 2, 2002, pp. 127-136.
Canadian Patent Application No. 2,433,144, Examiner's Report mailed Mar. 26, 2013.
Canadian Patent Application No. 2,433,144, Examiner's Report mailed Nov. 2, 2010.
Canadian Patent Application No. 2,433,144, Examiner's Report mailed Sep. 8, 2008.
Chinese Patent Application No. 01822786.4, Office Action mailed Feb. 2, 2007.
Chinese Patent Application No. 01822786.4, Office Action mailed Sep. 21, 2007.
Chinese Patent Application No. 201080029806.3, Original Language and English Translation of Office Action mailed Aug. 15, 2013.
Chinese Patent Application No. 201080029807.8, Original Language and English Translation of Office Action mailed Aug. 27, 2013.
European Patent Application No. 01994499.0, Examination Report mailed Dec. 7, 2006.
European Patent Application No. 01994499.0, Examination Report mailed Feb. 10, 2009.
European Patent Application No. 01994499.0, Examination Report mailed Oct. 11, 2007.
European Patent Application No. 06839640.7, Extended European Search Report mailed Oct. 21, 2010.
European Patent Application No. 09010614.7, Examination Report mailed Aug. 8, 2012.
European Patent Application No. 09010614.7, Extended European Search Report mailed Mar. 2, 2010.
European Patent Application No. 10012409.8, Examination Report mailed Dec. 13, 2012.
European Patent Application No. 10012409.8, Extended European Search Report mailed Mar. 15, 2011.
European Patent Application No. 10012414.8, Examination Report mailed Dec. 13, 2012.
European Patent Application No. 10012414.8, Extended European Search Report mailed Mar. 15, 2011.
European Patent Application No. 10012960.0, Extended European Search Report mailed Mar. 2, 2011.
European Patent Application No. 10012961.8, Extended European Search Report mailed Mar. 2, 2011.
European Patent Application No. 99903239.4, Examination Report mailed Apr. 14, 2008.
European Patent Application No. 99903239.4, Examination Report mailed Dec. 20, 2004.
European Patent Application No. 99903239.4, Examination Report mailed Oct. 7, 2005.
European Patent Application No. 99903239.4, Invitation Pursuant to Article 94(3) and Rule 71(1) EPC mailed Dec. 15, 2010.
Japanese Patent Application No. 2000-546653, Office Action mailed Dec. 15, 2009.
Japanese Patent Application No. 2000-546653, Office Action mailed Jan. 6, 2009.
Japanese Patent Application No. 2002-558875, Office Action mailed Sep. 26, 2006.
Japanese Patent Application No. 2007-270411, Original Language and English Translation of Office Action mailed Aug. 17, 2010.
Japanese Patent Application No. 2007-270411, Original Language and English Translation of Office Action mailed Jun. 21, 2011.
PCT Application No. PCT/US1999/001229, International Preliminary Examination Report mailed Aug. 1, 2000.
PCT Application No. PCT/US1999/001229, International Search Report mailed May 6, 1999.
PCT Application No. PCT/US1999/001229, Written Opinion of the International Preliminary Examining Authority mailed Feb. 7, 2000.
PCT Application No. PCT/US2001/050832, International Preliminary Examination Report mailed Nov. 4, 2003.
PCT Application No. PCT/US2001/050832, International Search Report mailed Dec. 17, 2002.
PCT Application No. PCT/US2006/060400, International Preliminary Report on Patentability and Written Opinion of the International Searching Authority mailed May 15, 2008.
PCT Application No. PCT/US2006/060400, International Search Report and Written Opinion of the International Searching Authority mailed Oct. 16, 2007.
PCT Application No. PCT/US2008/074469, International Preliminary Report on Patentability and Written Opinion of the International Searching Authority mailed Mar. 11, 2010.
PCT Application No. PCT/US2008/074469, International Search Report and Written Opinion of the International Searching Authority mailed Nov. 3, 2008.
PCT Application No. PCT/US2010/040117, International Preliminary Report on Patentability and Written Opinion of the International Searching Authority mailed Jan. 12, 2012.
PCT Application No. PCT/US2010/040117, International Search Report and Written Opinion of the International Searching Authority mailed Sep. 1, 2010.
PCT Application No. PCT/US2010/040118, International Preliminary Report on Patentability and Written Opinion of the International Searching Authority mailed Jan. 12, 2012.
PCT Application No. PCT/US2010/040118, International Search Report and Written Opinion of the International Searching Authority mailed Sep. 17, 2010.
PCT Application No. PCT/US2010/040119, International Preliminary Report on Patentability and Written Opinion of the International Searching Authority mailed Jan. 12, 2012.
PCT Application No. PCT/US2010/040119, International Search Report and Written Opinion of the International Searching Authority mailed Sep. 17, 2010.
U.S. Appl. No. 09/070,677, Notice of Allowance mailed Aug. 1, 2000.
U.S. Appl. No. 09/070,677, Notice of Allowance mailed Jun. 6, 2000.
U.S. Appl. No. 09/070,677, Office Action mailed Apr. 27, 1999.
U.S. Appl. No. 09/070,677, Office Action mailed Nov. 15, 1999.
U.S. Appl. No. 09/667,199, Notice of Allowance mailed Nov. 25, 2002.
U.S. Appl. No. 09/667,199, Office Action mailed Jul. 24, 2002.
U.S. Appl. No. 09/753,746, Notice of Allowance mailed Oct. 9, 2002.
U.S. Appl. No. 09/753,746, Office Action mailed Jul. 3, 2002.
U.S. Appl. No. 10/336,195, Office Action mailed Apr. 29, 2005.
U.S. Appl. No. 10/336,195, Office Action mailed Dec. 28, 2007.
U.S. Appl. No. 10/336,195, Office Action mailed Feb. 6, 2006.
U.S. Appl. No. 10/336,195, Office Action mailed Jul. 16, 2008.
U.S. Appl. No. 10/336,195, Office Action mailed Jun. 17, 2004.
U.S. Appl. No. 10/336,195, Office Action mailed Mar. 25, 2009.
U.S. Appl. No. 10/336,195, Office Action mailed Nov. 10, 2009.
U.S. Appl. No. 10/336,195, Office Action mailed Oct. 26, 2006.
U.S. Appl. No. 10/420,057, Advisory Action mailed Jan. 27, 2009.
U.S. Appl. No. 10/420,057, Office Action mailed Apr. 4, 2006.
U.S. Appl. No. 10/420,057, Office Action mailed Aug. 21, 2008.
U.S. Appl. No. 10/420,057, Office Action mailed Jul. 25, 2007.
U.S. Appl. No. 10/420,057, Office Action mailed Jun. 1, 2005.
U.S. Appl. No. 10/420,057, Office Action mailed Jun. 24, 2010.
U.S. Appl. No. 10/420,057, Office Action mailed Nov. 23, 2007.
U.S. Appl. No. 10/420,057, Office Action mailed Oct. 17, 2006.
U.S. Appl. No. 10/420,057, Office Action mailed Sep. 30, 2009.

(56) **References Cited**

OTHER PUBLICATIONS

U.S. Appl. No. 10/722,246, Office Action mailed Dec. 28, 2005.
U.S. Appl. No. 10/722,246, Office Action mailed Oct. 12, 2006.
U.S. Appl. No. 10/722,251, Notice of Allowance mailed Jul. 22, 2005.
U.S. Appl. No. 10/722,253, Notice of Allowance mailed Jul. 5, 2005.
U.S. Appl. No. 10/722,264, Notice of Allowance mailed Jan. 26, 2005.
U.S. Appl. No. 10/783,675, Office Action mailed Dec. 14, 2010.
U.S. Appl. No. 10/783,675, Office Action mailed Dec. 18, 2012.
U.S. Appl. No. 10/783,675, Office Action mailed Dec. 2, 2008.
U.S. Appl. No. 10/783,675, Office Action mailed Jun. 2, 2011.
U.S. Appl. No. 10/783,675, Office Action mailed Mar. 24, 2010.
U.S. Appl. No. 10/783,675, Office Action mailed Oct. 9, 2007.
U.S. Appl. No. 10/783,675, Patent Office Communication mailed Apr. 15, 2009.
U.S. Appl. No. 10/789,776, Office Action mailed Apr. 3, 2009.
U.S. Appl. No. 10/789,776, Office Action mailed Aug. 13, 2008.
U.S. Appl. No. 10/789,776, Office Action mailed Jan. 7, 2010.
U.S. Appl. No. 10/789,776, Office Action mailed Nov. 1, 2007.
U.S. Appl. No. 10/789,776, Office Action mailed Sep. 3, 2009.
U.S. Appl. No. 11/027,423, Office Action mailed Feb. 20, 2009.
U.S. Appl. No. 11/027,423, Office Action mailed Nov. 4, 2009.
U.S. Appl. No. 11/041,404, Advisory Action mailed May 28, 2008.
U.S. Appl. No. 11/041,404, Office Action mailed Mar. 14, 2008.
U.S. Appl. No. 11/041,404, Office Action mailed May 29, 2007.
U.S. Appl. No. 11/041,404, Office Action mailed Sep. 11, 2006.
U.S. Appl. No. 11/265,787, Office Action mailed Aug. 4, 2010.
U.S. Appl. No. 11/265,787, Office Action mailed Nov. 12, 2010.
U.S. Appl. No. 11/681,730, Office Action mailed Apr. 27, 2011.
U.S. Appl. No. 11/681,730, Office Action mailed Dec. 15, 2011.
U.S. Appl. No. 11/681,730, Office Action mailed Jan. 27, 2010.
U.S. Appl. No. 11/681,730, Office Action mailed Mar. 6, 2009.
U.S. Appl. No. 11/681,730, Office Action mailed Oct. 15, 2010.
U.S. Appl. No. 11/681,730, Office Action mailed Sep. 15, 2009.
U.S. Appl. No. 11/683,371, Office Action mailed Aug. 13, 2010.
U.S. Appl. No. 11/683,371, Office Action mailed Jun. 24, 2010.
U.S. Appl. No. 11/683,371, Office Action mailed Mar. 11, 2009.
U.S. Appl. No. 11/683,371, Office Action mailed Mar. 8, 2011.
U.S. Appl. No. 11/683,371, Office Action mailed Sep. 23, 2009.
U.S. Appl. No. 11/683,396, Advisory Action mailed Dec. 4, 2009.
U.S. Appl. No. 11/683,396, Notice of Allowance mailed Dec. 10, 2012.
U.S. Appl. No. 11/683,396, Office Action mailed Apr. 20, 2009.
U.S. Appl. No. 11/683,396, Office Action mailed Jan. 18, 2011.
U.S. Appl. No. 11/683,396, Office Action mailed May 10, 2010.
U.S. Appl. No. 11/683,396, Office Action mailed Sep. 22, 2009.
U.S. Appl. No. 11/683,396, Office Action mailed Sep. 8, 2011.
U.S. Appl. No. 11/683,408, Notice of Allowance mailed Oct. 19, 2010.
U.S. Appl. No. 11/683,408, Office Action mailed Jul. 12, 2010.
U.S. Appl. No. 11/683,408, Office Action mailed Mar. 10, 2009.
U.S. Appl. No. 11/683,408, Office Action mailed Oct. 19, 2009.
U.S. Appl. No. 11/690,826, Office Action mailed Aug. 9, 2011.
U.S. Appl. No. 11/690,826, Office Action mailed Dec. 29, 2009.
U.S. Appl. No. 11/690,826, Office Action mailed Mar. 26, 2009.
U.S. Appl. No. 11/695,605, Advisory Action mailed Apr. 7, 2010.
U.S. Appl. No. 11/695,605, Office Action mailed Apr. 16, 2009.
U.S. Appl. No. 11/695,605, Office Action mailed Jan. 22, 2010.
U.S. Appl. No. 11/695,607, Office Action mailed Mar. 2, 2011.
U.S. Appl. No. 11/695,607, Office Action mailed Mar. 4, 2010.
U.S. Appl. No. 11/695,608, Office Action mailed Dec. 28, 2009.
U.S. Appl. No. 11/695,608, Office Action mailed Jul. 22, 2010.
U.S. Appl. No. 11/695,608, Office Action mailed Jun. 29, 2009.
U.S. Appl. No. 11/695,608, Office Action mailed Mar. 29, 2011.
U.S. Appl. No. 11/734,782, Office Action mailed Apr. 3, 2009.
U.S. Appl. No. 11/734,782, Office Action mailed Jul. 19, 2010.
U.S. Appl. No. 11/734,782, Office Action mailed Oct. 28, 2009.
U.S. Appl. No. 11/737,671, Office Action mailed Oct. 16, 2012.
U.S. Appl. No. 11/742,453, Office Action mailed Apr. 16, 2009.
U.S. Appl. No. 11/742,453, Office Action mailed Jan. 11, 2010.
U.S. Appl. No. 11/742,453, Office Action mailed Oct. 28, 2011.
U.S. Appl. No. 11/742,507, Notice of Allowance mailed Apr. 2, 2010.
U.S. Appl. No. 11/742,507, Office Action mailed Apr. 13, 2011.
U.S. Appl. No. 11/742,507, Office Action mailed Aug. 12, 2009.
U.S. Appl. No. 11/742,507, Office Action mailed Jun. 12, 2009.
U.S. Appl. No. 11/742,546, Office Action mailed Dec. 9, 2009.
U.S. Appl. No. 11/742,571, Office Action mailed Dec. 29, 2009.
U.S. Appl. No. 11/766,686, Office Action mailed Jun. 25, 2010.
U.S. Appl. No. 11/766,686, Office Action mailed Oct. 6, 2009.
U.S. Appl. No. 11/766,708, Office Action mailed Jul. 9, 2010.
U.S. Appl. No. 11/766,708, Office Action mailed Mar. 3, 2011.
U.S. Appl. No. 11/766,708, Office Action mailed Oct. 8, 2009.
U.S. Appl. No. 11/766,726, Office Action mailed Mar. 9, 2010.
U.S. Appl. No. 11/766,726, Office Action mailed Oct. 27, 2009.
U.S. Appl. No. 11/766,747, Office Action mailed Feb. 5, 2009.
U.S. Appl. No. 11/766,747, Office Action mailed Nov. 13, 2009.
U.S. Appl. No. 11/849,200, Office Action mailed Nov. 6, 2012.
U.S. Appl. No. 11/928,574, Office Action mailed Dec. 30, 2009.
U.S. Appl. No. 11/928,574, Office Action mailed Jul. 21, 2010.
U.S. Appl. No. 11/928,668, Office Action mailed Apr. 1, 2010.
U.S. Appl. No. 11/928,668, Office Action mailed Dec. 23, 2010.
U.S. Appl. No. 11/928,795, Office Action mailed May 12, 2011.
U.S. Appl. No. 11/928,795, Office Action mailed Sep. 15, 2010.
U.S. Appl. No. 11/928,968, Office Action mailed Apr. 28, 2010.
U.S. Appl. No. 11/928,968, Office Action mailed Jul. 22, 2009.
U.S. Appl. No. 11/941,078, Office Action mailed Apr. 22, 2011.
U.S. Appl. No. 11/941,078, Office Action mailed Dec. 22, 2010.
U.S. Appl. No. 11/941,078, Office Action mailed Dec. 22, 2011.
U.S. Appl. No. 11/941,078, Office Action mailed Mar. 18, 2010.
U.S. Appl. No. 12/039,565, Office Action mailed Feb. 4, 2010.
U.S. Appl. No. 12/052,489, Office Action mailed Dec. 31, 2009.
U.S. Appl. No. 12/109,049, Office Action mailed Jun. 14, 2010.
U.S. Appl. No. 12/109,049, Office Action mailed Mar. 4, 2011.
U.S. Appl. No. 12/135,937, Notice of Allowance mailed May 18, 2012.
U.S. Appl. No. 12/135,937, Office Action mailed Dec. 19, 2011.
U.S. Appl. No. 12/135,937, Office Action mailed Mar. 30, 2010.
U.S. Appl. No. 12/249,644, Notice of Allowance mailed Mar. 14, 2012.
U.S. Appl. No. 12/249,644, Office Action mailed Apr. 15, 2011.
U.S. Appl. No. 12/249,644, Office Action mailed Nov. 17, 2011.
U.S. Appl. No. 12/371,539, Notice of Allowance mailed May 31, 2012.
U.S. Appl. No. 12/371,539, Office Action mailed Mar. 7, 2011.
U.S. Appl. No. 12/371,539, Office Action mailed Sep. 26, 2011.
U.S. Appl. No. 12/397,281, Office Action mailed Apr. 16, 2010.
U.S. Appl. No. 12/397,281, Office Action mailed May 12, 2011.
U.S. Appl. No. 12/397,281, Office Action mailed Oct. 15, 2010.
U.S. Appl. No. 12/397,293, Office Action mailed Aug. 5, 2011.
U.S. Appl. No. 12/397,293, Office Action mailed Dec. 1, 2010.
U.S. Appl. No. 12/397,293, Office Action mailed May 6, 2010.
U.S. Appl. No. 12/397,301, Advisory Action mailed Jun. 29, 2012.
U.S. Appl. No. 12/397,301, Office Action mailed Apr. 29, 2010.
U.S. Appl. No. 12/397,301, Office Action mailed Aug. 22, 2011.
U.S. Appl. No. 12/397,301, Office Action mailed Dec. 1, 2010.
U.S. Appl. No. 12/397,301, Office Action mailed Mar. 16, 2012.
U.S. Appl. No. 12/397,301, Office Action mailed Sep. 13, 2012.
U.S. Appl. No. 12/405,515, Office Action mailed Apr. 29, 2011.
U.S. Appl. No. 12/405,515, Office Action mailed Jun. 8, 2012.
U.S. Appl. No. 12/405,515, Office Action mailed Nov. 15, 2012.
U.S. Appl. No. 12/405,515, Office Action mailed Nov. 22, 2011.
U.S. Appl. No. 12/405,515, Office Action mailed Sep. 23, 2010.
U.S. Appl. No. 12/405,568, Office Action mailed Jan. 25, 2011.
U.S. Appl. No. 12/405,568, Office Action mailed Sep. 16, 2011.
U.S. Appl. No. 12/405,643, Advisory Action mailed Mar. 9, 2012.
U.S. Appl. No. 12/405,643, Notice of Allowance mailed Oct. 17, 2012.
U.S. Appl. No. 12/405,643, Office Action mailed Jun. 13, 2012.
U.S. Appl. No. 12/405,643, Office Action mailed Mar. 30, 2011.
U.S. Appl. No. 12/405,643, Office Action mailed Nov. 14, 2011.
U.S. Appl. No. 12/405,690, Office Action mailed Mar. 10, 2011.
U.S. Appl. No. 12/405,739, Office Action mailed Mar. 15, 2011.

(56) **References Cited**

OTHER PUBLICATIONS

U.S. Appl. No. 12/405,843, Office Action mailed Mar. 24, 2011.
U.S. Appl. No. 12/405,958, Office Action mailed Feb. 8, 2010.
U.S. Appl. No. 12/405,987, Office Action mailed Mar. 9, 2010.
U.S. Appl. No. 12/405,987, Office Action mailed Nov. 16, 2010.
U.S. Appl. No. 12/406,746, Notice of Allowance mailed Mar. 23, 2012.
U.S. Appl. No. 12/406,746, Office Action mailed Apr. 5, 2011.
U.S. Appl. No. 12/406,746, Office Action mailed Jul. 23, 2010.
U.S. Appl. No. 12/406,746, Office Action mailed Sep. 1, 2011.
U.S. Appl. No. 12/406,800, Office Action mailed Apr. 20, 2011.
U.S. Appl. No. 12/406,800, Office Action mailed Jul. 20, 2010.
U.S. Appl. No. 12/406,800, Office Action mailed Jun. 8, 2012.
U.S. Appl. No. 12/406,800, Office Action mailed Nov. 29, 2011.
U.S. Appl. No. 12/414,456, Notice of Allowance mailed Dec. 19, 2011.
U.S. Appl. No. 12/414,456, Office Action mailed Apr. 29, 2011.
U.S. Appl. No. 12/414,456, Office Action mailed Sep. 17, 2010.
U.S. Appl. No. 12/414,474, Office Action mailed Mar. 15, 2011.
U.S. Appl. No. 12/414,487, Notice of Allowance mailed Dec. 20, 2011.
U.S. Appl. No. 12/414,487, Notice of Allowance mailed Sep. 5, 2012.
U.S. Appl. No. 12/414,487, Office Action mailed Mar. 3, 2011.
U.S. Appl. No. 12/414,487, Office Action mailed Oct. 31, 2011.
U.S. Appl. No. 12/414,531, Office Action mailed Mar. 22, 2011.
U.S. Appl. No. 12/414,542, Office Action mailed Apr. 13, 2011.
U.S. Appl. No. 12/414,542, Office Action mailed Nov. 14, 2011.
U.S. Appl. No. 12/414,542, Office Action mailed Sep. 24, 2012.
U.S. Appl. No. 12/414,558, Office Action mailed Apr. 4, 2011.
U.S. Appl. No. 12/422,269, Notice of Allowance mailed Dec. 10, 2012.
U.S. Appl. No. 12/422,269, Office Action mailed Apr. 14, 2011.
U.S. Appl. No. 12/422,269, Office Action mailed May 8, 2012.
U.S. Appl. No. 12/422,269, Office Action mailed Nov. 18, 2011.
U.S. Appl. No. 12/422,269, Office Action mailed Oct. 25, 2012.
U.S. Appl. No. 12/468,775, Office Action mailed Feb. 4, 2011.
U.S. Appl. No. 12/468,782, Office Action mailed Feb. 18, 2011.
U.S. Appl. No. 12/468,787, Office Action mailed Mar. 7, 2011.
U.S. Appl. No. 12/495,798, Office Action mailed Aug. 8, 2013.
U.S. Appl. No. 12/495,798, Office Action mailed Dec. 1, 2011.
U.S. Appl. No. 12/495,798, Office Action mailed Feb. 4, 2013.
U.S. Appl. No. 12/495,798, Office Action mailed Jul. 10, 2012.
U.S. Appl. No. 12/495,798, Office Action mailed Jun. 30, 2011.
U.S. Appl. No. 12/495,803, Notice of Allowance Aug. 24, 2012.
U.S. Appl. No. 12/495,803, Office Action mailed Dec. 1, 2011.
U.S. Appl. No. 12/495,803, Office Action mailed Jun. 14, 2012.
U.S. Appl. No. 12/495,803, Office Action mailed Jun. 30, 2011.
U.S. Appl. No. 12/533,680, Advisory Action mailed Mar. 9, 2012.
U.S. Appl. No. 12/533,680, Office Action mailed Jul. 24, 2012.
U.S. Appl. No. 12/533,680, Office Action mailed Mar. 3, 2011.
U.S. Appl. No. 12/533,680, Office Action mailed Nov. 14, 2011.
U.S. Appl. No. 12/614,974, Office Action mailed Apr. 13, 2011.
U.S. Appl. No. 12/614,974, Office Action mailed Jun. 7, 2012.
U.S. Appl. No. 12/614,974, Office Action mailed Nov. 21, 2011.
U.S. Appl. No. 12/614,990, Office Action mailed Apr. 14, 2011.
U.S. Appl. No. 12/614,990, Office Action mailed Dec. 15, 2011.
U.S. Appl. No. 12/614,990, Office Action mailed Jun. 7, 2012.
U.S. Appl. No. 12/615,069, Notice of Allowance mailed Dec. 29, 2011.
U.S. Appl. No. 12/615,069, Office Action mailed Jun. 9, 2011.
U.S. Appl. No. 12/615,128, Notice of Allowance mailed Jul. 2, 2012.
U.S. Appl. No. 12/615,128, Office Action mailed Aug. 19 2011.
U.S. Appl. No. 12/615,128, Office Action mailed Dec. 20, 2011.
U.S. Appl. No. 12/615,128, Office Action mailed Jun. 14, 2012.
U.S. Appl. No. 12/643,974, Notice of Allowance mailed Jan. 13, 2012.
U.S. Appl. No. 12/643,974, Office Action mailed May 4, 2011.
U.S. Appl. No. 12/643,974, Office Action mailed Oct. 1, 2010.
U.S. Appl. No. 12/643,975, Advisory Action mailed Dec. 19, 2011.
U.S. Appl. No. 12/643,975, Notice of Allowance mailed Aug. 31, 2012.
U.S. Appl. No. 12/643,975, Office Action mailed Feb. 18, 2011.
U.S. Appl. No. 12/643,975, Office Action mailed Sep. 22, 2011.
U.S. Appl. No. 12/643,977, Advisory Action mailed Mar. 9, 2012.
U.S. Appl. No. 12/643,977, Office Action mailed Apr. 14, 2011.
U.S. Appl. No. 12/643,977, Office Action mailed Oct. 19, 2011.
U.S. Appl. No. 12/643,977, Office Action mailed Oct. 4, 2012.
U.S. Appl. No. 12/643,978, Advisory Action mailed Mar. 13, 2012.
U.S. Appl. No. 12/643,978, Office Action mailed Apr. 15, 2011.
U.S. Appl. No. 12/643,978, Office Action mailed Jan. 3, 2013.
U.S. Appl. No. 12/643,978, Office Action mailed Oct. 18, 2011.
U.S. Appl. No. 12/643,980, Notice of Allowance mailed Apr. 5, 2012.
U.S. Appl. No. 12/643,980, Office Action mailed Dec. 1, 2011.
U.S. Appl. No. 12/643,980, Office Action mailed Jun. 24, 2011.
U.S. Appl. No. 12/643,980, Office Action mailed Oct. 29, 2010.
U.S. Appl. No. 12/643,982, Advisory Action mailed Mar. 13, 2012.
U.S. Appl. No. 12/643,982, Notice of Allowance mailed Nov. 13, 2012.
U.S. Appl. No. 12/643,982, Office Action mailed Jun. 17, 2011.
U.S. Appl. No. 12/643,982, Office Action mailed Nov. 23, 2011.
U.S. Appl. No. 12/643,982, Office Action mailed Oct. 28, 2010.
U.S. Appl. No. 12/643,986, Advisory Action mailed Mar. 13, 2012.
U.S. Appl. No. 12/643,986, Notice of Allowance mailed Nov. 13, 2012.
U.S. Appl. No. 12/643,986, Office Action mailed Jun. 17, 2011.
U.S. Appl. No. 12/643,986, Office Action mailed Nov. 23, 2011.
U.S. Appl. No. 12/643,986, Office Action mailed Oct. 29, 2010.
U.S. Appl. No. 12/648,143, Notice of Allowance mailed May 31, 2012.
U.S. Appl. No. 12/648,143, Office Action mailed Jan. 20, 2011.
U.S. Appl. No. 12/648,143, Office Action mailed May 11, 2011.
U.S. Appl. No. 12/648,143, Office Action mailed Oct. 11, 2011.
U.S. Appl. No. 12/717,937, Office Action mailed Sep. 22, 2010.
U.S. Appl. No. 12/779,941, Office Action mailed Jan. 25, 2011.
U.S. Appl. No. 12/779,944, Office Action mailed Jan. 25, 2011.
U.S. Appl. No. 12/779,947, Office Action mailed Apr. 8, 2011.
U.S. Appl. No. 12/825,180, Office Action mailed Mar. 4, 2011.
U.S. Appl. No. 12/825,186, Office Action mailed Mar. 31, 2011.
U.S. Appl. No. 12/825,202, Office Action mailed Jun. 8, 2011.
U.S. Appl. No. 12/846,803, Office Action mailed Feb. 17, 2011.
U.S. Appl. No. 12/846,803, Office Action mailed Sep. 22, 2010.
U.S. Appl. No. 12/852,436, Notice of Allowance mailed Oct. 21, 2010.
U.S. Appl. No. 12/852,436, Office Action mailed Sep. 29, 2010.
U.S. Appl. No. 12/852,439, Notice of Allowance mailed Oct. 14, 2010.
U.S. Appl. No. 12/855,682, Office Action mailed Sep. 22, 2010.
U.S. Appl. No. 12/859,054, Office Action mailed Dec. 29, 2011.
U.S. Appl. No. 12/859,054, Office Action mailed Jul. 13, 2011.
U.S. Appl. No. 12/902,138, Notice of Allowance, mailed Feb. 23, 2012.
U.S. Appl. No. 12/902,138, Office Action mailed Jan. 27, 2012.
U.S. Appl. No. 12/902,138, Office Action mailed Jun. 7, 2011.
U.S. Appl. No. 12/959,337, Office Action, mailed Mar. 5, 2012.
U.S. Appl. No. 13/283,562, Office Action mailed May 9, 2013.
U.S. Appl. No. 13/283,562, Office Action mailed Sep. 5, 2013.
U.S. Appl. No. 13/481,256, Office Action mailed Aug. 22, 2012.
Reexamination U.S. Appl. No. 90/007,903, Advisory Action mailed Nov. 20, 2008.
Reexamination U.S. Appl. No. 90/007,903, Decision of the CAFC mailed Sep. 28, 2012.
Reexamination U.S. Appl. No. 90/007,903, Decision on Appeal mailed Jan. 18, 2011.
Reexamination U.S. Appl. No. 90/007,903, Examiner's Answer to Appeal Brief mailed Oct. 2, 2009.
Reexamination U.S. Appl. No. 90/007,903, Notice of Intent to Issue a Reexam Certificate mailed Aug. 20, 2013.
Reexamination U.S. Appl. No. 90/007,903, Office Action mailed Feb. 13, 2008.
Reexamination U.S. Appl. No. 90/007,903, Office Action mailed Sep. 19, 2008.

(56) **References Cited**

OTHER PUBLICATIONS

Reexamination U.S. Appl. No. 90/007,903, Order Granting Request for Reexamination mailed Mar. 27, 2006.
Reexamination U.S. Appl. No. 90/007,903, Patent Board Decision mailed May 17, 2013.
Reexamination U.S. Appl. No. 90/007,903, Request for Reexamination of U.S. Patent No. 6,565,509 filed Jan. 25, 2006.
Reexamination U.S. Appl. No. 90/007,910, Advisory Action mailed Feb. 6, 2009.
Reexamination U.S. Appl. No. 90/007,910, Advisory Action mailed Jul. 30, 2009.
Reexamination U.S. Appl. No. 90/007,910, Decision of the CAFC mailed Sep. 28, 2012.
Reexamination U.S. Appl. No. 90/007,910, Decision on Appeal mailed Jan. 18, 2011.
Reexamination U.S. Appl. No. 90/007,910, Examiner's Answer to Appeal Brief mailed Nov. 19, 2009.
Reexamination U.S. Appl. No. 90/007,910, Notice of Intent to Issue a Reexam Certificate mailed Aug. 26, 2013.
Reexamination U.S. Appl. No. 90/007,910, Office Action mailed Feb. 13, 2008.
Reexamination U.S. Appl. No. 90/007,910, Office Action mailed Oct. 2, 2008.
Reexamination U.S. Appl. No. 90/007,910, Order Granting Request for Reexamination mailed Mar. 27, 2006.
Reexamination U.S. Appl. No. 90/007,910, Patent Board Decision mailed May 17, 2013.
Reexamination U.S. Appl. No. 90/007,910, Request for Reexamination of U.S. Patent No. 6,175,752 filed Feb. 1, 2006.
Reexamination U.S. Appl. No. 90/007,913, Request for Reexamination of U.S. Patent No. 6,284,478 filed Feb. 1, 2006.
Reexamination U.S. Appl. No. 90/007,914, Request for Reexamination of U.S. Patent No. 6,329,161 filed Feb. 1, 2006.
Reexamination U.S. Appl. No. 90/008,172, Request for Reexamination of U.S. Patent No. 6,990,366 filed Aug. 16, 2006.
Reexamination U.S. Appl. No. 90/008,173, Request for Reexamination of U.S. Patent No. 6,134,461 filed Aug. 16, 2006.
Reexamination U.S. Appl. No. 90/008,234, Request for Reexamination of U.S. Patent No. 5,899,855 filed Oct. 31, 2006.
Reexamination U.S. Appl. No. 90/008,457, Notice of Intent to Issue Reexamination Certificate mailed Mar. 13, 2008.
Reexamination U.S. Appl. No. 90/008,457, Order Granting Request for Reexamination mailed Feb. 23, 2007.
Reexamination U.S. Appl. No. 90/008,457, Request for Reexamination of U.S. Patent No. 6,990,366 filed Jan. 23, 2007.
Reexamination U.S. Appl. No. 90/008,665, Request for Reexamination of U.S. Patent No. 6,284,478 filed May 25, 2007.
Reexamination U.S. Appl. No. 90/008,713, Request for Reexamination of U.S. Patent No. 6,329,161 filed Jul. 25, 2007.
Reexamination U.S. Appl. No. 90/008,909, Request for Reexamination of U.S. Patent No. 5,899,855 filed Dec. 11, 2007.
Reexamination U.S. Appl. No. 90/008,928, Request for Reexamination of U.S. Patent No. 6,134,461 filed Nov. 16, 2007.
Reexamination U.S. Appl. Nos. 90/009,104 & 90/009,328, Notice of Intent to Issue Reexamination Certificate mailed Nov. 20, 2009.
Reexamination U.S. Appl. Nos. 90/009,104 & 90/009,328, Office Action mailed Aug. 4, 2009.
Reexamination U.S. Appl. Nos. 90/009,104 & 90/009,328, Office Action mailed Sep. 30, 2009.
Reexamination U.S. Appl. No. 90/009,104, Office Action mailed Oct. 16, 2008.
Reexamination U.S. Appl. No. 90/009,104, Order Granting Request for Reexamination mailed Jun. 5, 2008.
Reexamination U.S. Appl. No. 90/009,104, Request for Reexamination of U.S. Patent No. 6,990,366 filed Apr. 8, 2008.
Reexamination U.S. Appl. No. 90/009,270, Order Denying Request for Reexamination mailed Dec. 1, 2008.
Reexamination U.S. Appl. No. 90/009,270, Request for Reexamination of U.S. Patent No. 6,175,752 filed Sep. 8, 2008.
Reexamination U.S. Appl. No. 90/009,279, Order Denying Request for Reexamination mailed Dec. 1, 2008.
Reexamination U.S. Appl. No. 90/009,279, Request for Reexamination of U.S. Patent No. 6,565,509 filed Sep. 17, 2008.
Reexamination U.S. Appl. No. 90/009,328, Order Granting Request for Reexamination mailed Dec. 9, 2008.
Reexamination U.S. Appl. No. 90/009,328, Request for Reexamination of U.S. Patent No. 6,990,366 filed Nov. 10, 2008.
Reexamination U.S. Appl. No. 90/009,352, Request for Reexamination of U.S. Patent No. 5,899,855 filed Dec. 4, 2008.
Reexamination U.S. Appl. No. 90/009,390, Office Action mailed Aug. 23, 2010.
Reexamination U.S. Appl. No. 90/009,390, Office Action mailed Nov. 26, 2010.
Reexamination U.S. Appl. No. 90/009,390, Order Granting Request for Reexamination mailed May 1, 2009.
Reexamination U.S. Appl. No. 90/009,390, Request for Reexamination of U.S. Patent No. 6,565,509 filed Jan. 21, 2009.
Reexamination U.S. Appl. No. 90/009,472, Office Action mailed Sep. 6, 2012.
Reexamination U.S. Appl. No. 90/009,472, Replacement Request for Reexamination of U.S. Patent No. 6,284,478 filed Sep. 3, 2009.
Reexamination U.S. Appl. No. 90/009,472, Request for Reexamination of U.S. Patent No. 6,284,478 filed May 27, 2009.
Reexamination U.S. Appl. No. 90/009,488, Replacement Request for Reexamination of U.S. Patent No. 6,329,161 filed Jul. 31, 2009.
Reexamination U.S. Appl. No. 90/009,488, Request for Reexamination of U.S. Patent No. 6,329,161 filed Jun. 10, 2009.
Reexamination U.S. Appl. No. 90/009,497, Notice of Intent to Issue Reexamination Certificate mailed Aug. 23, 2010.
Reexamination U.S. Appl. No. 90/009,497, Order Granting Request for Reexamination mailed Jul. 30, 2009.
Reexamination U.S. Appl. No. 90/009,497, Request for Reexamination of U.S. Patent No. 6,175,752 filed Jun. 17, 2009.
Reexamination U.S. Appl. No. 90/009,620, Request for Reexamination of U.S. Patent No. 6,329,161 filed Oct. 27, 2009.
Reexamination U.S. Appl. No. 90/009,763, Request for Reexamination of U.S. Patent No. 6,134,461 filed Jun. 18, 2010.
Reexamination U.S. Appl. No. 90/010,791, Notice of Intent to Issue Reexamination Certificate mailed May 17, 2011.
Reexamination U.S. Appl. No. 90/010,791, Office Action mailed Dec. 17, 2010.
Reexamination U.S. Appl. No. 90/010,791, Office Action mailed May 28, 2010.
Reexamination U.S. Appl. No. 90/010,791, Order Granting Request for Reexamination mailed Feb. 22, 2010.
Reexamination U.S. Appl. No. 90/010,791, Request for Reexamination of U.S. Patent No. 6,990,366 filed Dec. 22, 2009.
Reexamination U.S. Appl. No. 90/010,835, Request for Reexamination of U.S. Patent No. 6,134,461 filed Jan. 27, 2010.
Reexamination U.S. Appl. No. 90/011,317, Replacement Request for Reexamination of U.S. Patent No. 6,484,046 filed Jan. 14, 2011.
Reexamination U.S. Appl. No. 90/011,317, Request for Reexamination of U.S. Patent No. 6,484,046 filed Nov. 5, 2010.
Reexamination U.S. Appl. No. 90/011,346, Request for Reexamination of U.S. Patent No. 6,103,033 filed Nov. 19, 2010.
Reexamination U.S. Appl. No. 90/011,730, Notice of Intent to Issue Reexam Certificate for U.S. Patent No. 6,990,366 mailed Apr. 5, 2012.
Reexamination U.S. Appl. No. 90/011,730, Office Action mailed Jan. 11, 2012.
Reexamination U.S. Appl. No. 90/011,730, Order Granting Request for Reexamination of U.S. Patent No. 6,990,366 mailed Aug. 24, 2011.
Reexamination U.S. Appl. No. 90/011,730, Request for Reexamination of U.S. Patent No. 6,990,366 filed Jun. 3, 2011.
Reexamination U.S. Appl. No. 95/002,113, Order Denying Request for Reexamination of U.S. Patent No. 6,990,366 mailed Nov. 13, 2012.
Reexamination U.S. Appl. No. 95/002,113, Petition for Review of the Order Denying Request Reexamination of U.S. Patent No. 6,990,366 mailed Dec. 13, 2012.

(56) **References Cited**

OTHER PUBLICATIONS

Reexamination U.S. Appl. No. 95/002,113, Request for Reexamination of U.S. Patent No. 6,990,366 filed Aug. 30, 2012.
Reexamination U.S. Appl. No. 95/002,162, Order Denying Request for Reexamination of U.S. Patent No. 8,175,673 mailed Nov. 13, 2012.
Reexamination U.S. Appl. No. 95/002,162, Petition for Review of the Order Denying Request Reexamination of U.S. Patent No. 8,175,673 mailed Dec. 13, 2012.
Reexamination U.S. Appl. No. 95/002,162, Request for Reexamination of U.S. Patent No. 8,175,673 filed Sep. 7, 2012.
Australian Patent Application No. 2010266535, Examination Report mailed Mar. 11, 2014.
European Patent Application No. 10794591.7, Extended European Search Report mailed Jun. 25, 2014.
European Patent Application No. 10794593.3, Extended European Search Report mailed Jun. 30, 2014.
Australian Patent Application No. 2010266534, Examination Report mailed Feb. 19, 2014.
Japanese Patent Application No. 2012-517810, Original Language and English Translation of Office Action mailed Apr. 8, 2014.
U.S. Appl. No. 12/495,798, Notice of Allowance mailed Dec. 6, 2013.
U.S. Appl. No. 13/283,562, Office Action mailed Apr. 3, 2014.
Novacek, P., "Audio Warnings", Avionics News, 2003, pp. 60-64.
Japanese Patent Application No. 2012-517812, Original Language and English Translation of Office Action mailed Jul. 1, 2014.
Canadian Patent Application No. 2,628,294, Examiner's Report mailed Mar. 10, 2014.
U.S. Appl. No. 13/729,965, Notice of Allowance mailed Sep. 12, 2014.
U.S. Appl. No. 14/229,520, Notice of Allowance mailed Sep. 18, 2014.
U.S. Appl. No. 14/229,520, Office Action mailed Jul. 28, 2014.
European Patent Application No. 10794592.5, Search Report mailed Apr. 16, 2015.
European Patent Application No. 10794593.3, Examination Report mailed Apr. 13, 2015.

* cited by examiner

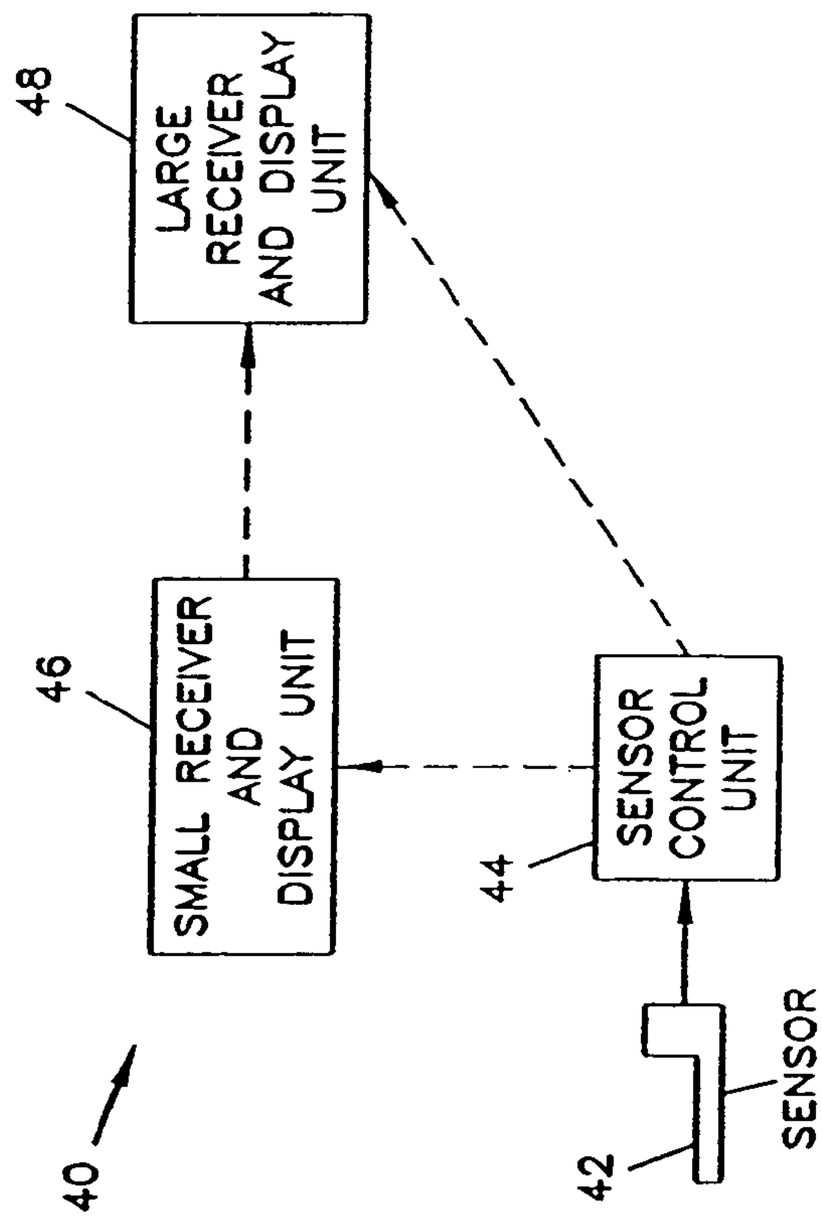
LARGE RECEIVER AND DISPLAY UNIT
48
SMALL RECEIVER AND DISPLAY UNIT
46
SENSOR CONTROL UNIT
44
SENSOR
42
40

FIG. 1

FIG. 2

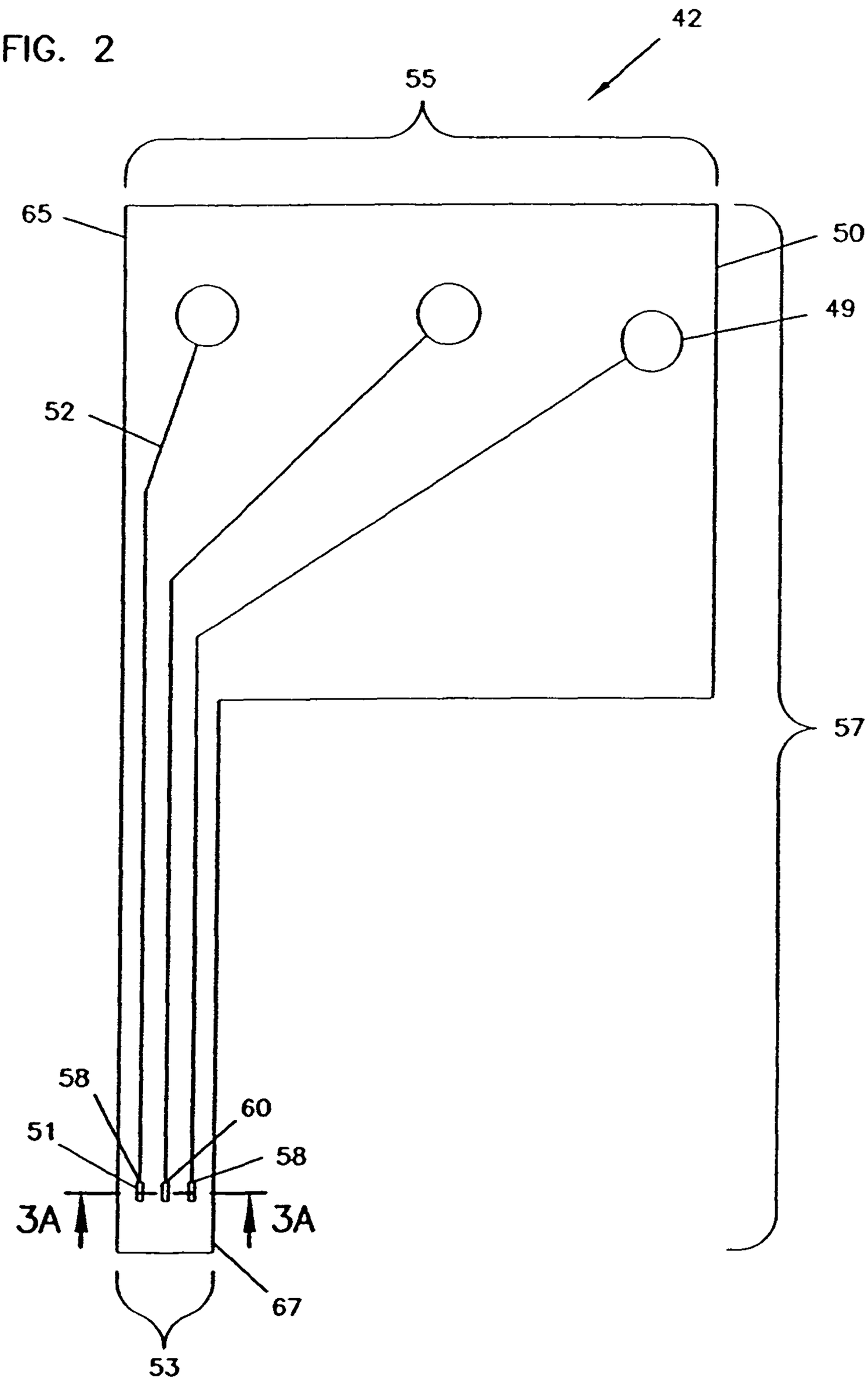

FIG. 3A

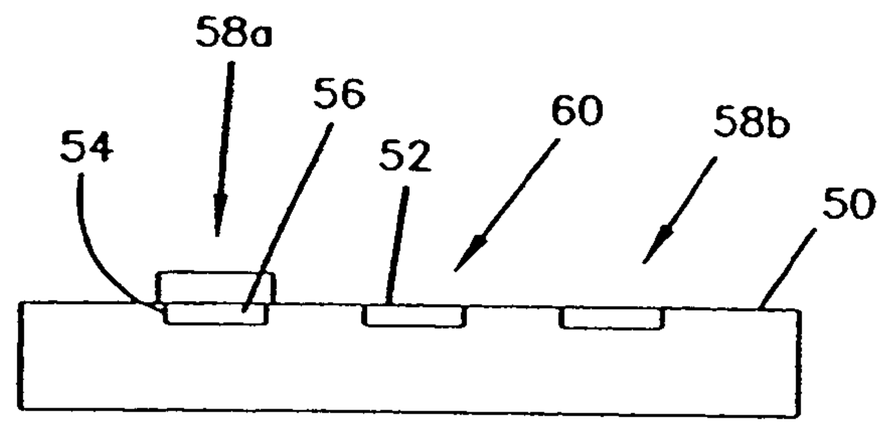

FIG. 3B

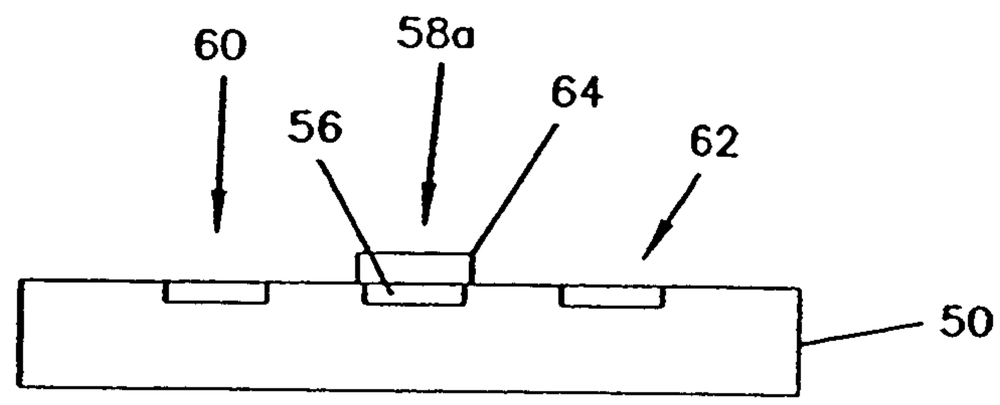

FIG. 9

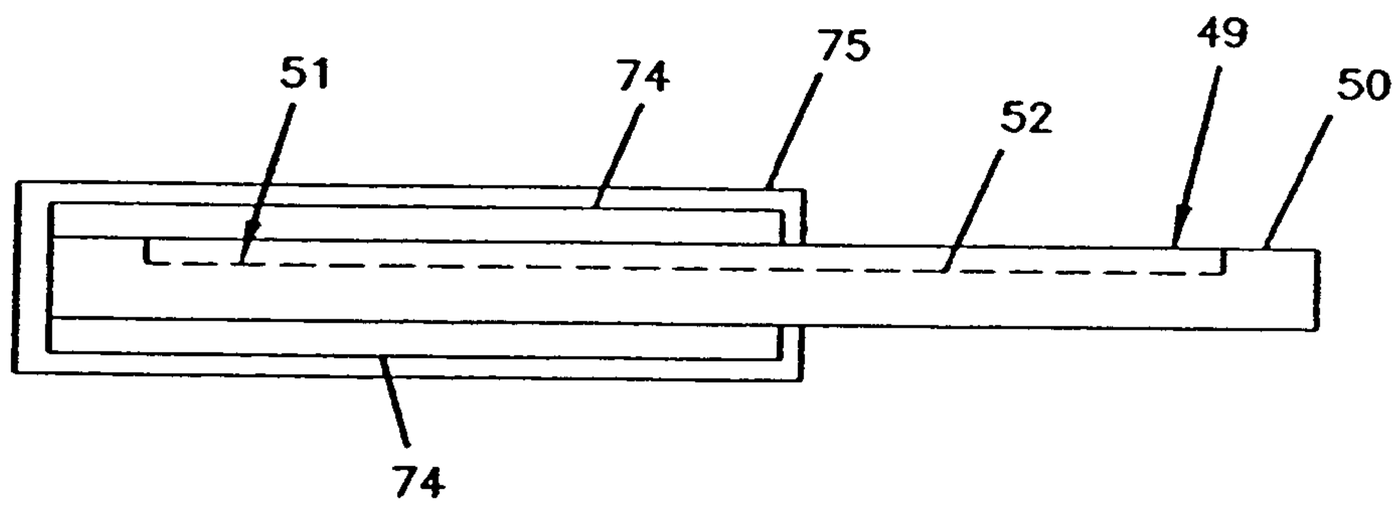

FIG. 4A

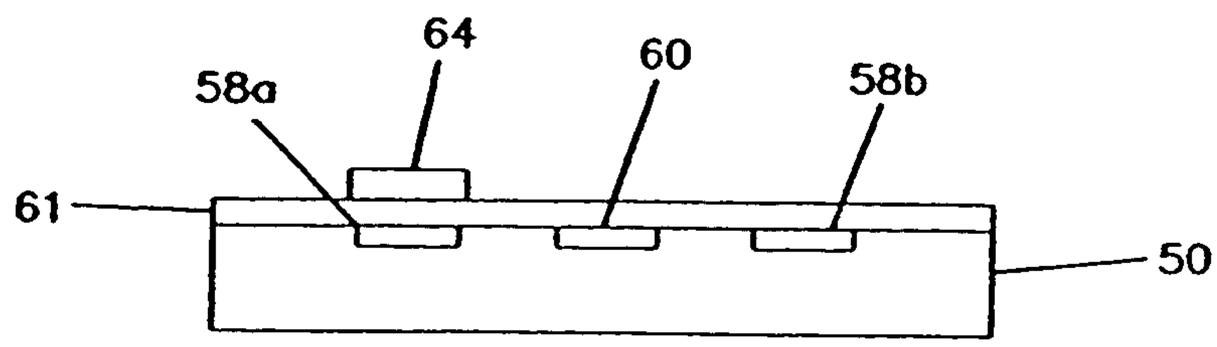

FIG. 4B

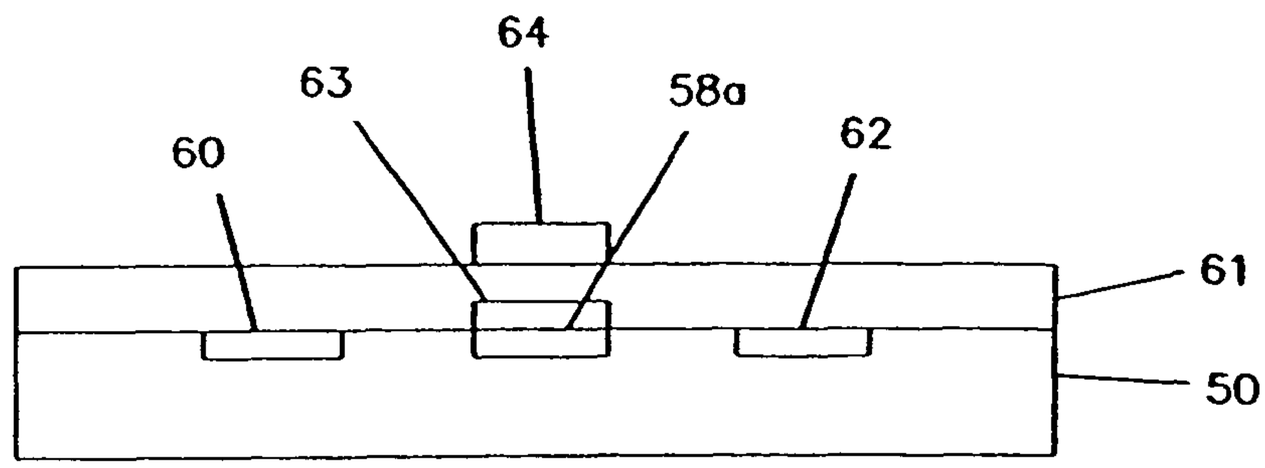

FIG. 5

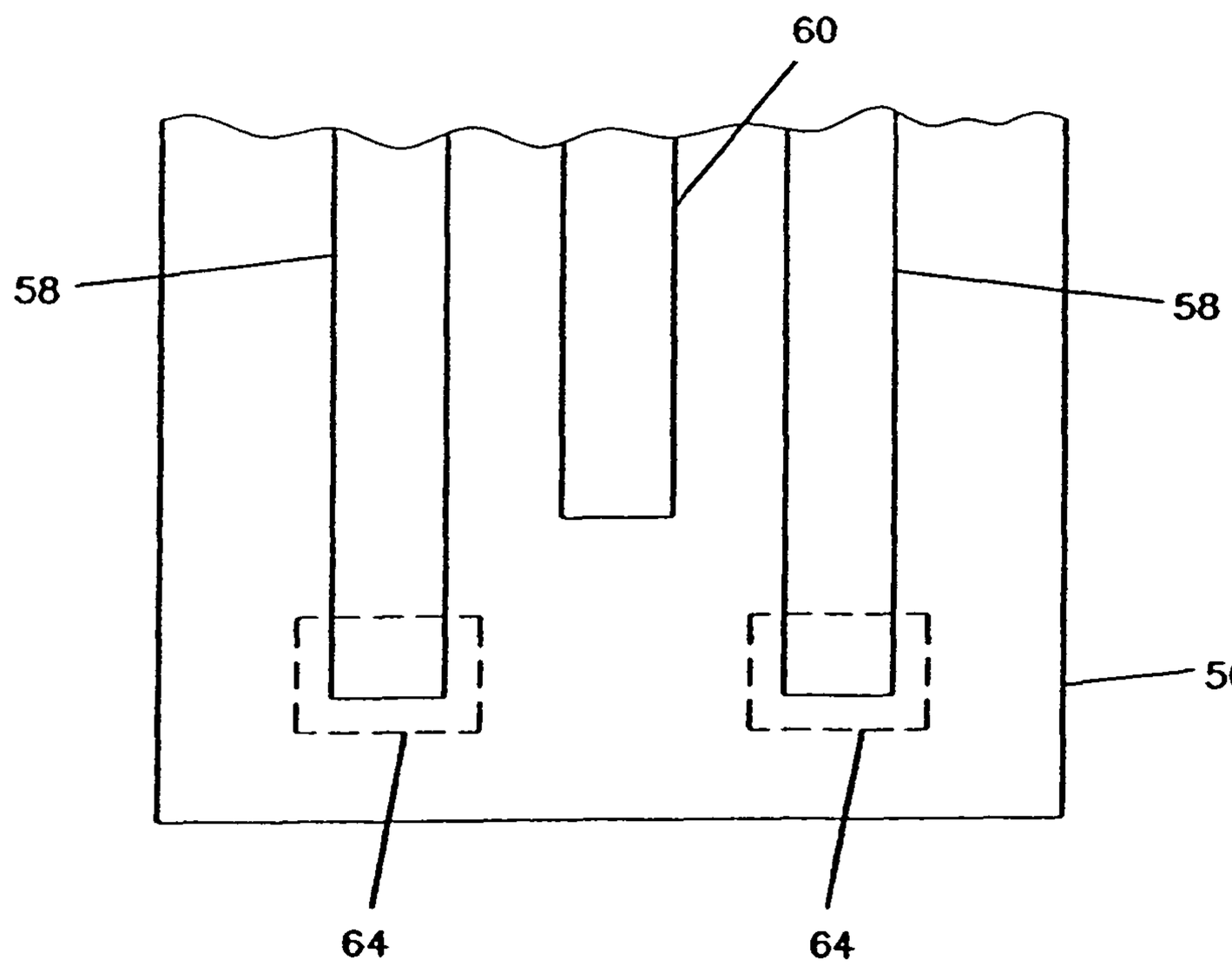

FIG. 6

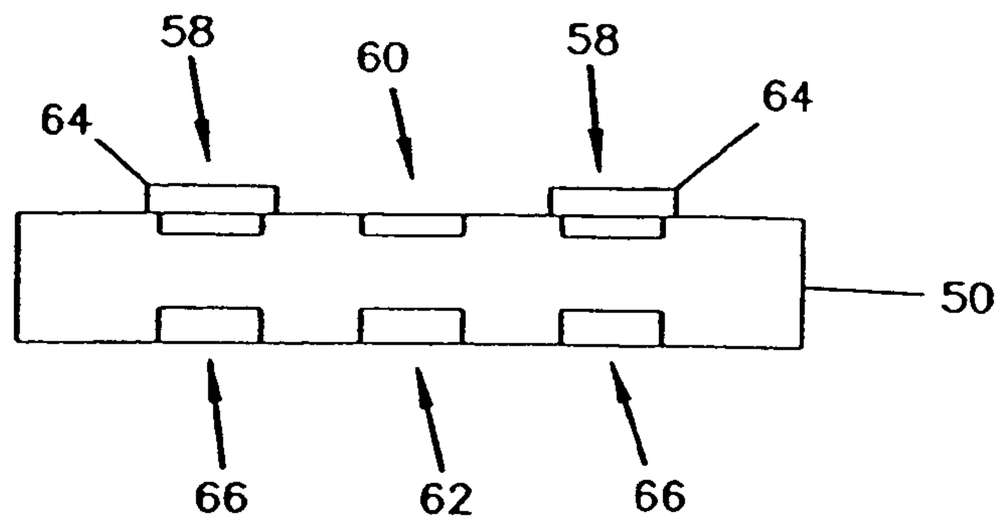

FIG. 7

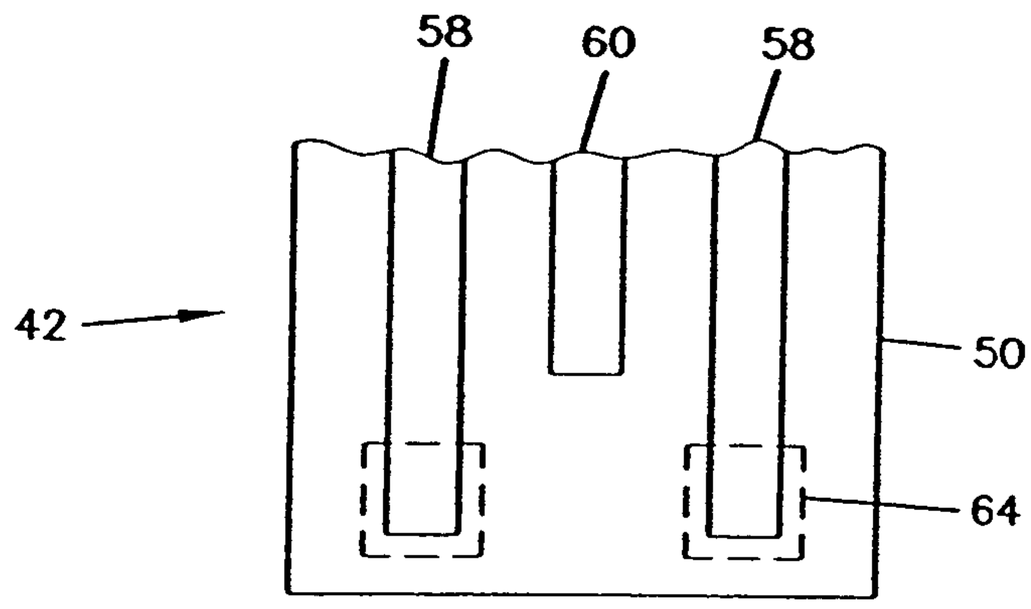

FIG. 8

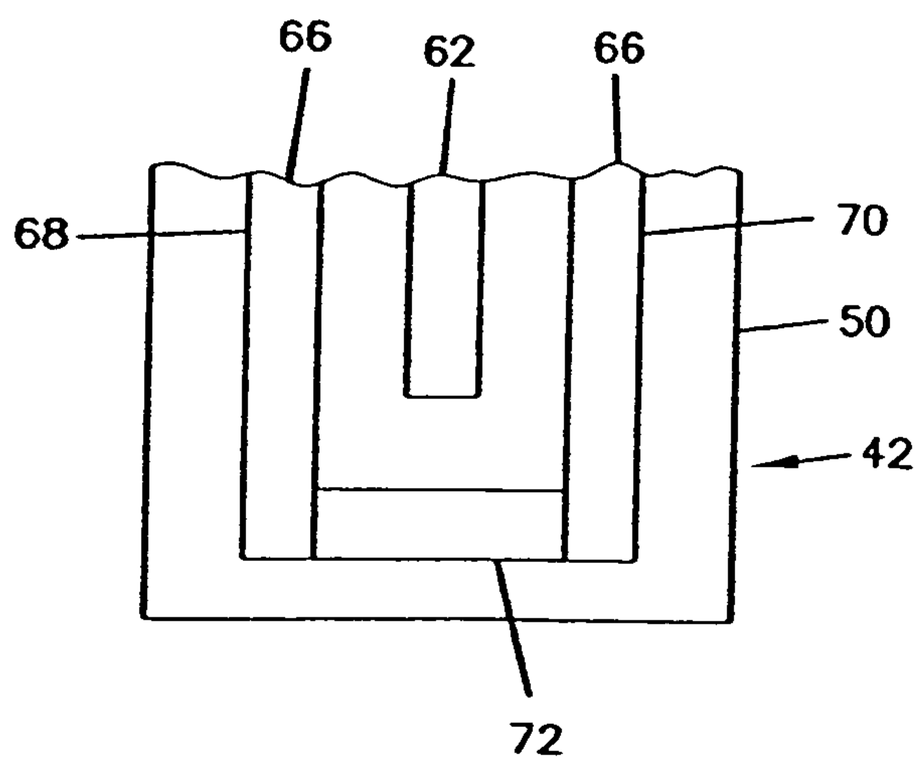

FIG. 10

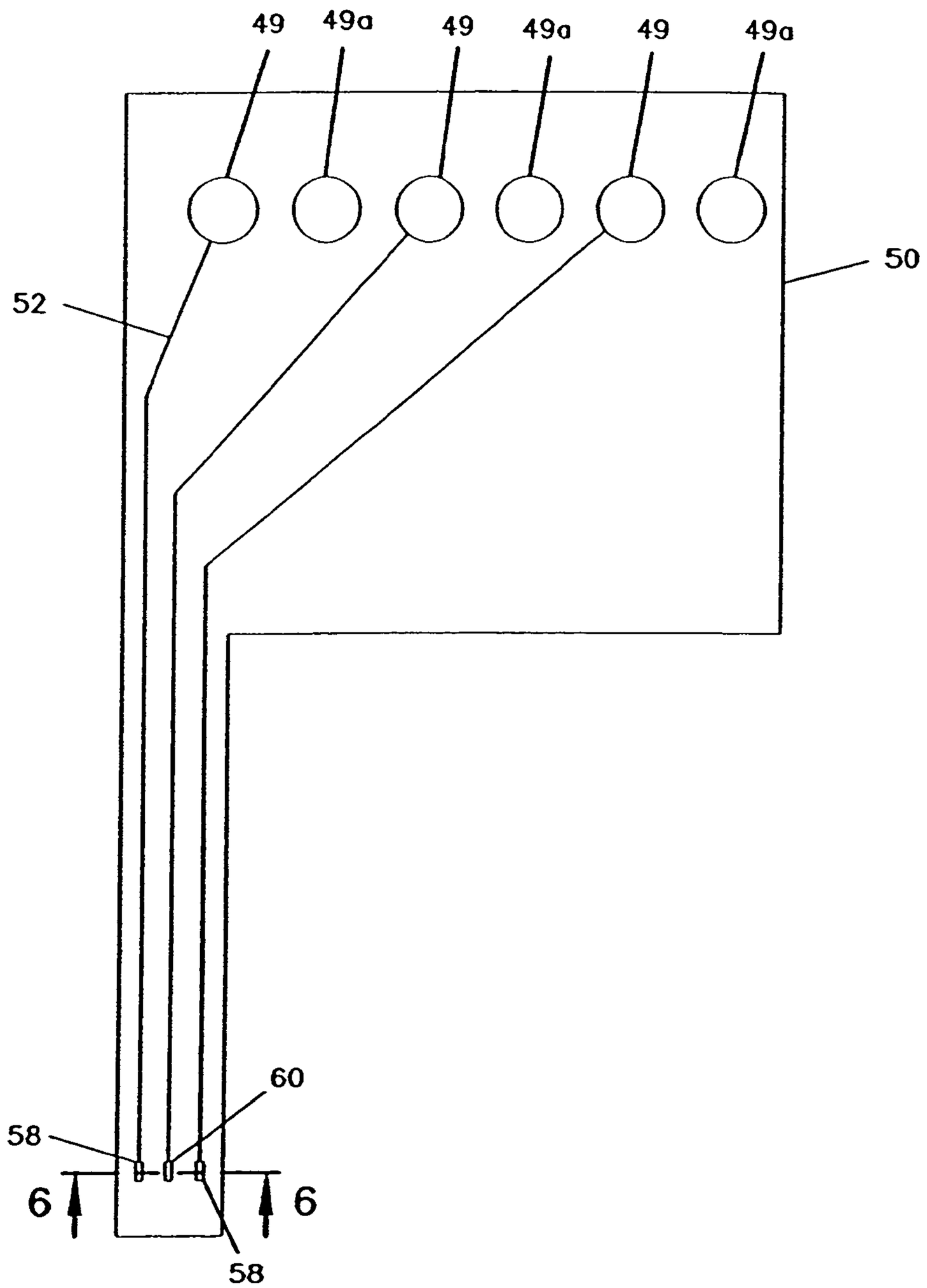

FIG. 11

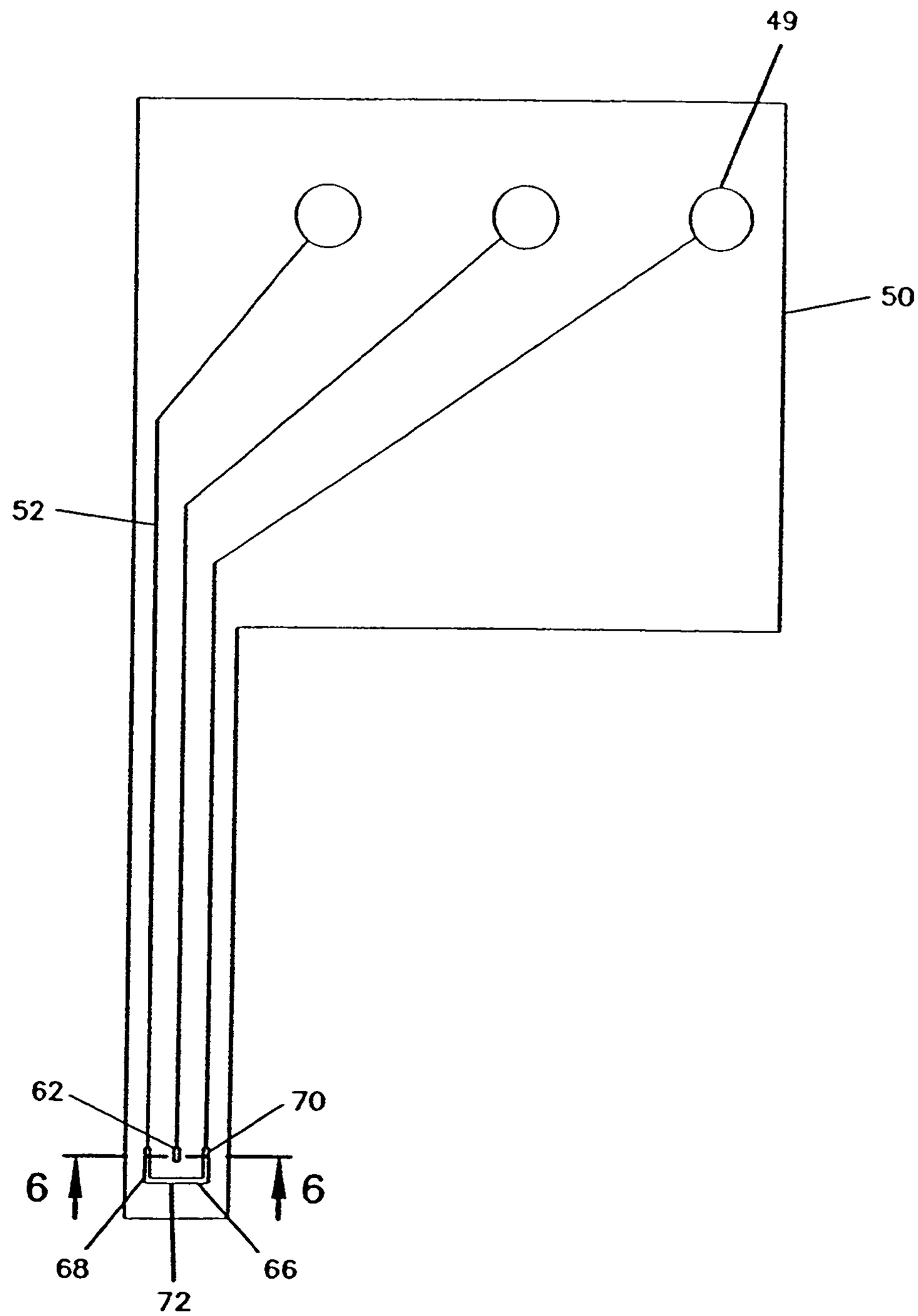

FIG. 12

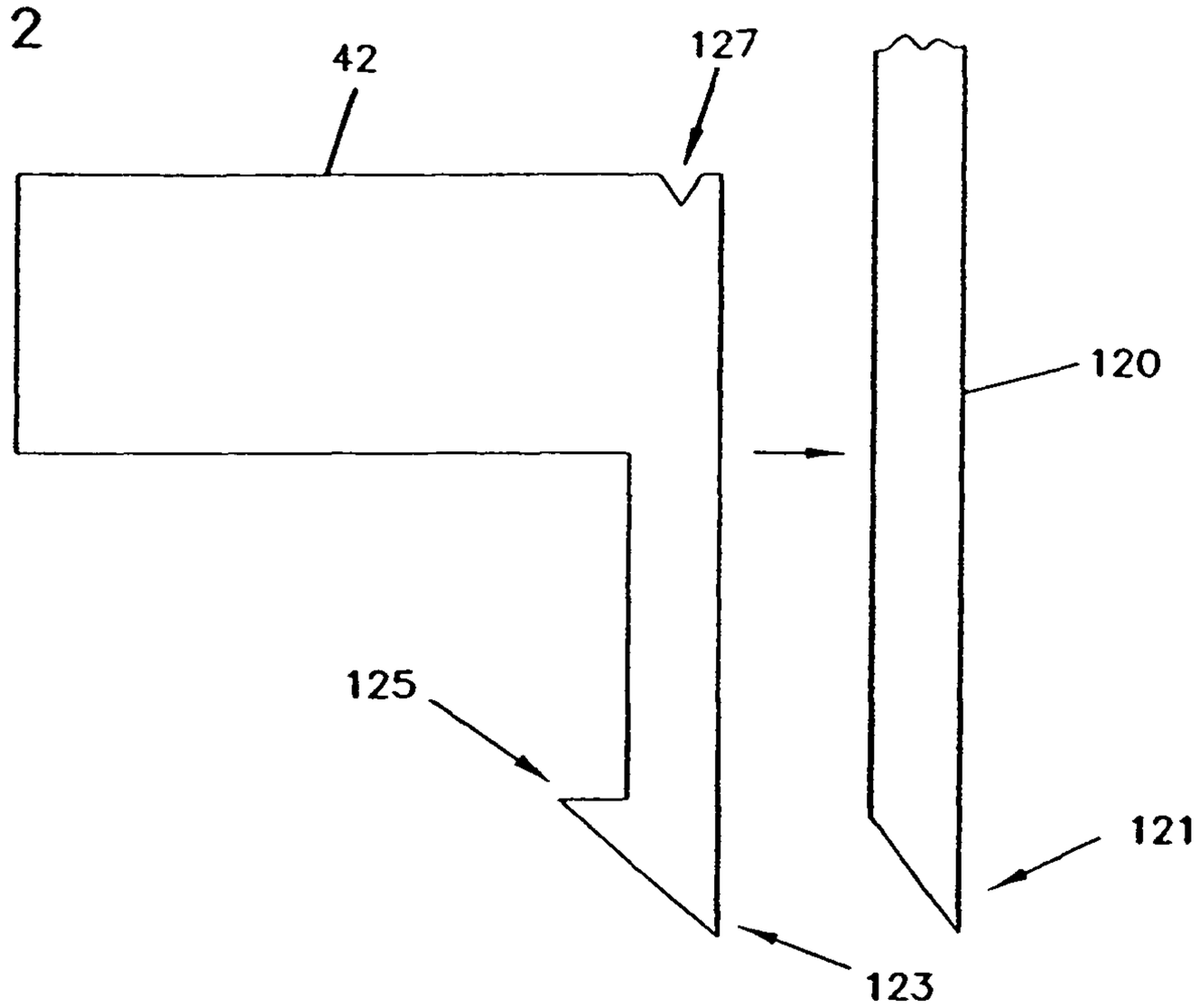

FIG. 13A

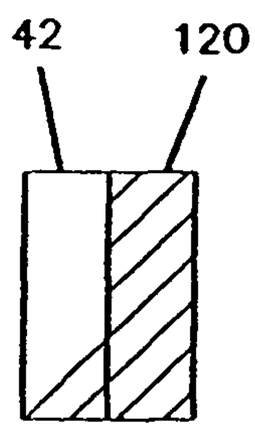

FIG. 13B

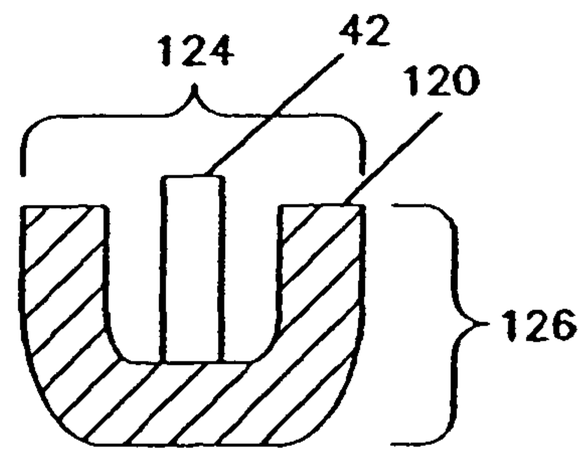

FIG. 13C

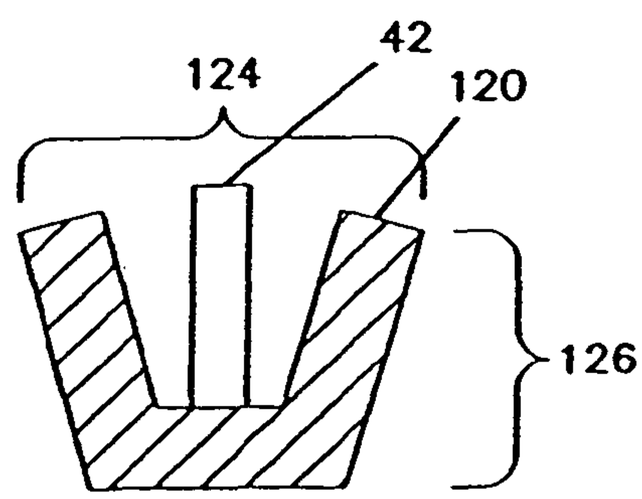

FIG. 15

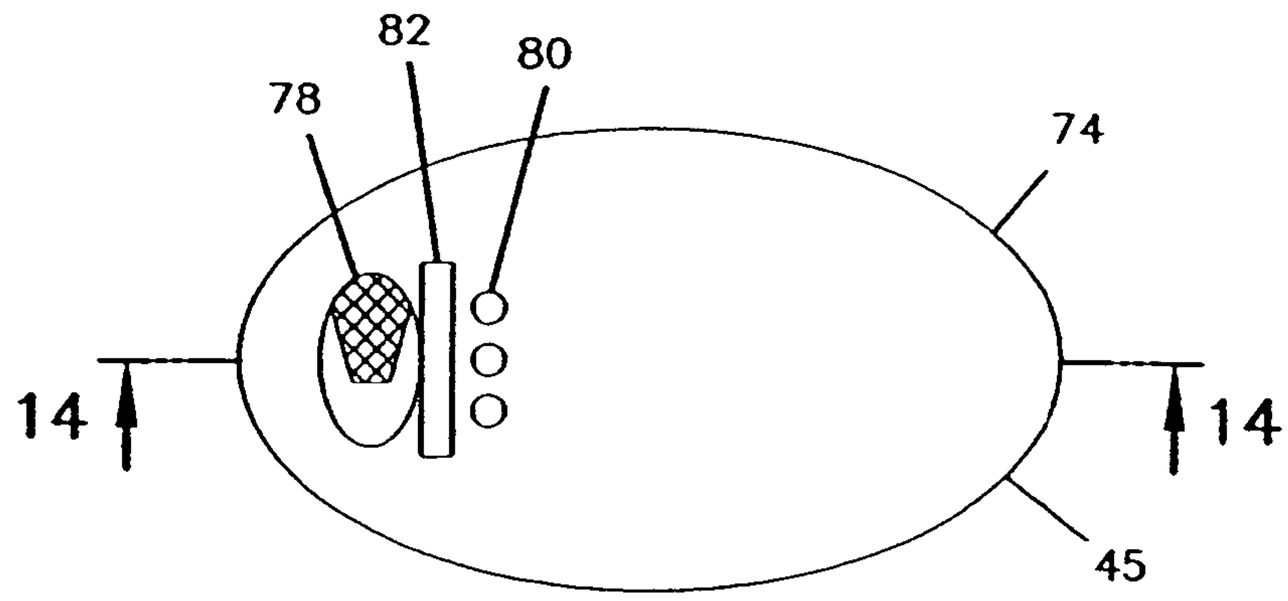

FIG. 16

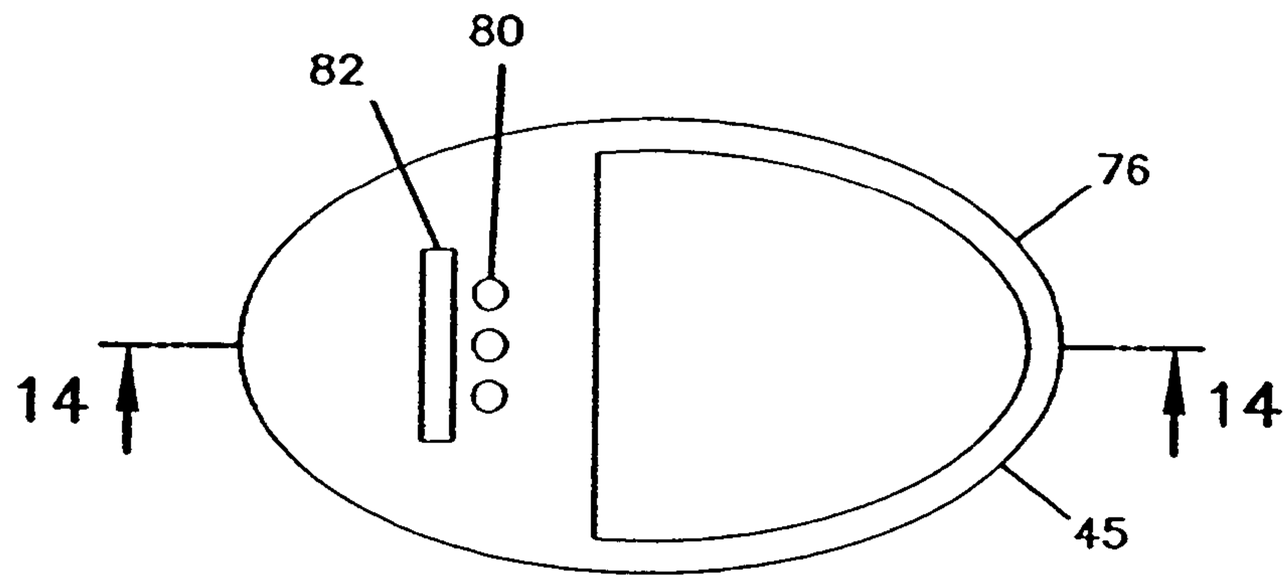

FIG. 14

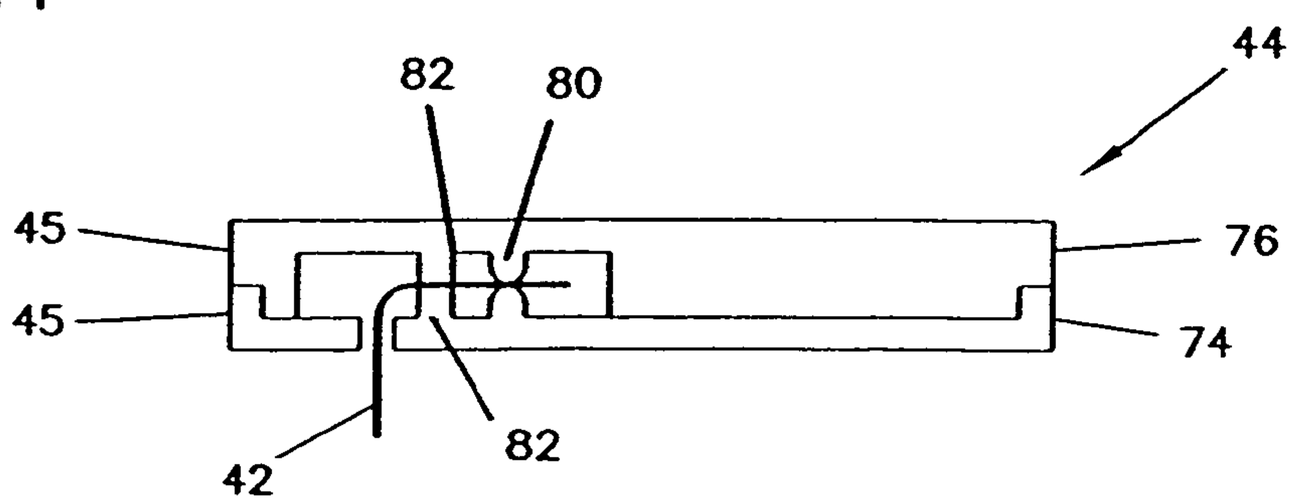

FIG. 17

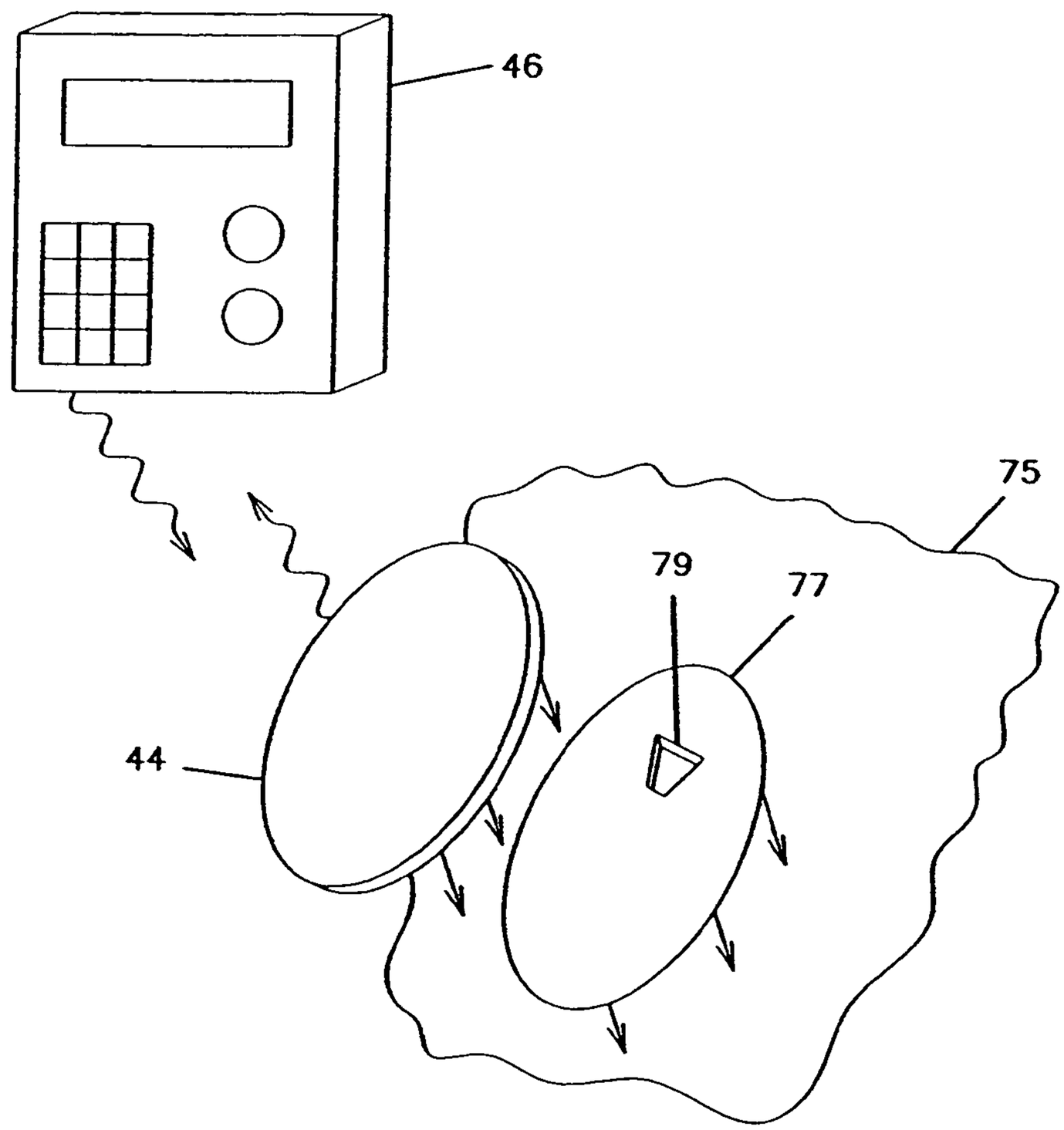

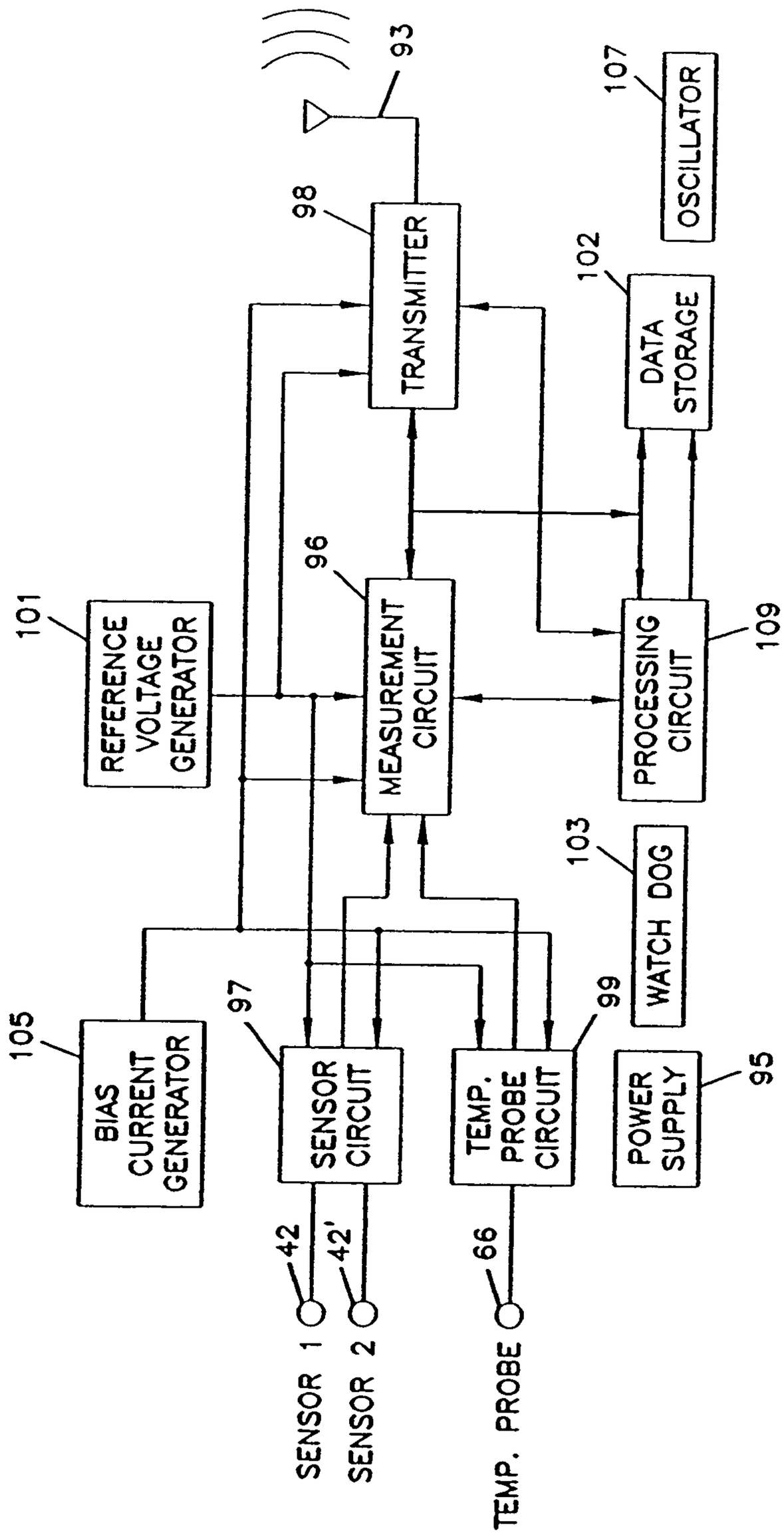
93
98
TRANSMITTER
107
OSCILLATOR
102
DATA STORAGE
96
101
REFERENCE VOLTAGE GENERATOR
MEASUREMENT CIRCUIT
PROCESSING CIRCUIT
109
103
WATCH DOG
105
BIAS CURRENT GENERATOR
97
SENSOR CIRCUIT
TEMP. PROBE CIRCUIT
99
POWER SUPPLY
95
42
42'
66
SENSOR 1
SENSOR 2
TEMP. PROBE

FIG. 18A

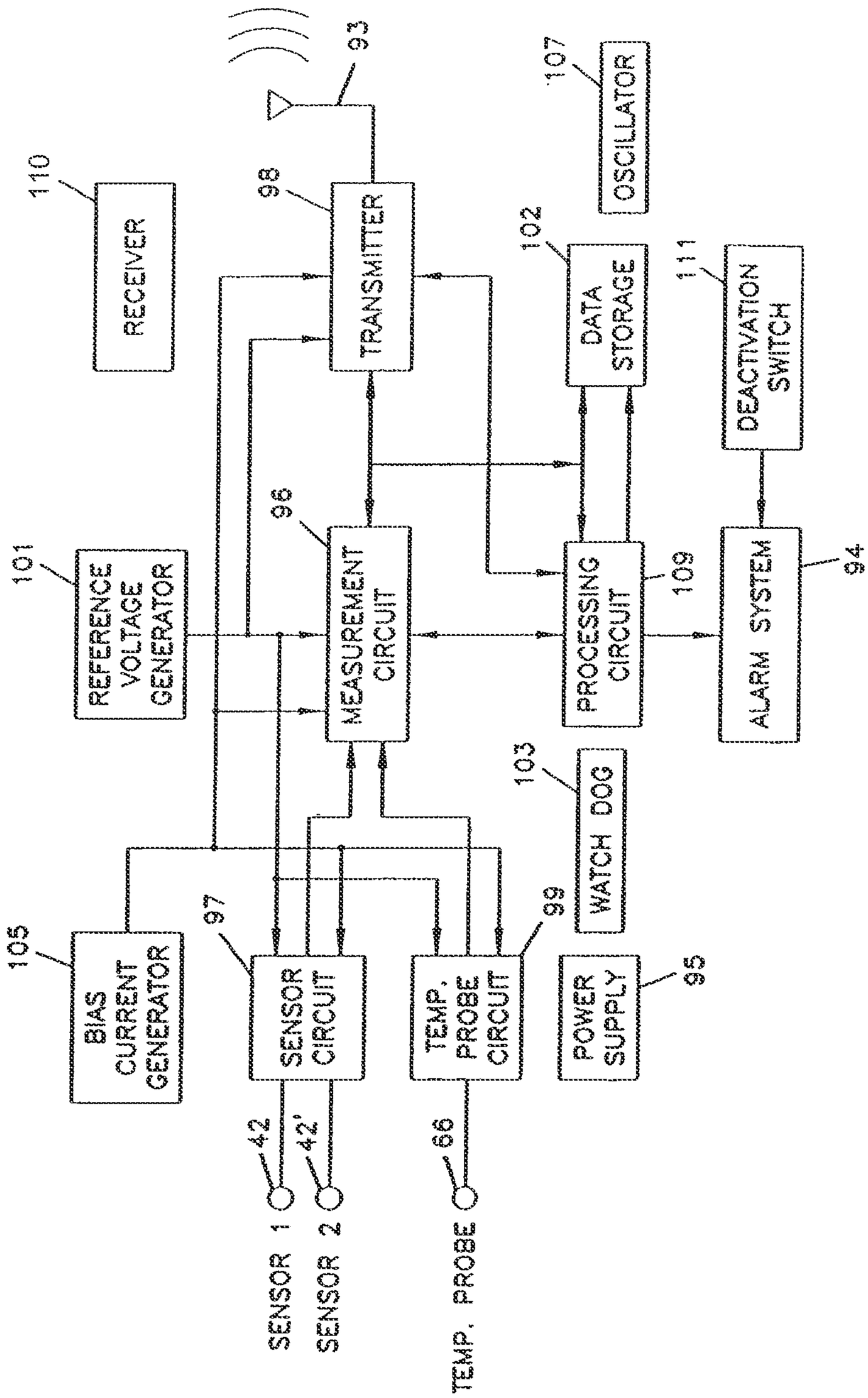
110
RECEIVER
98
TRANSMITTER
93
107
OSCILLATOR
102
DATA STORAGE
111
DEACTIVATION SWITCH
101
REFERENCE VOLTAGE GENERATOR
96
MEASUREMENT CIRCUIT
PROCESSING CIRCUIT
109
ALARM SYSTEM
94
103
WATCH DOG
105
BIAS CURRENT GENERATOR
97
SENSOR CIRCUIT
TEMP. PROBE CIRCUIT
99
POWER SUPPLY
95
42
SENSOR 1
42'
SENSOR 2
66
TEMP. PROBE

FIG. 18B

FIG. 19A

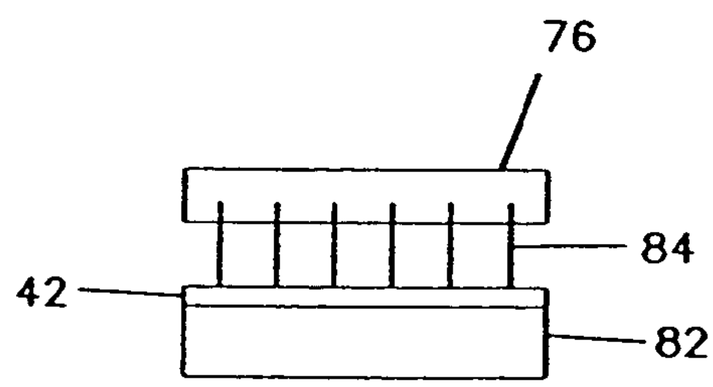

FIG. 19B

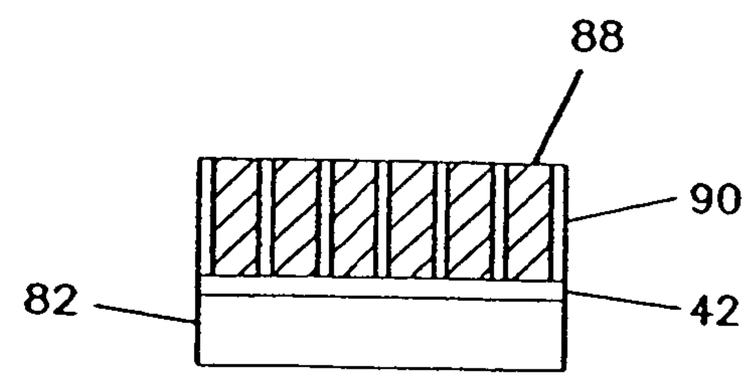

FIG. 19C

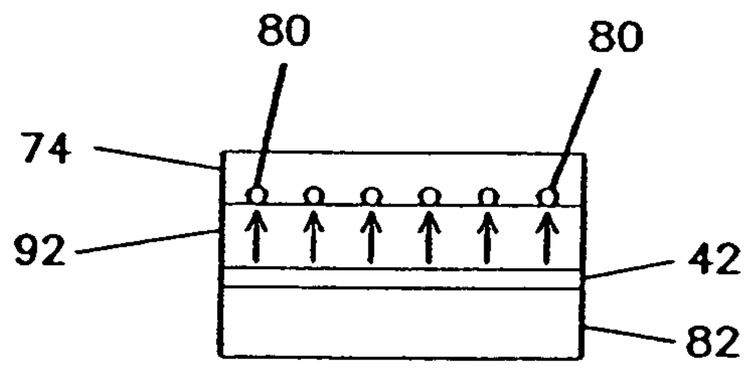

FIG. 19D

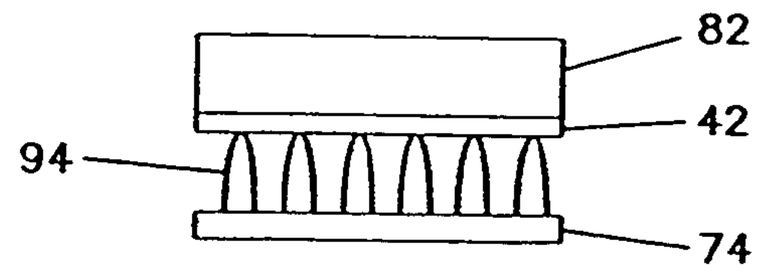

FIG. 19E

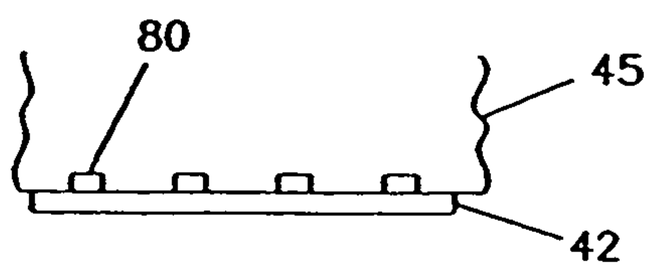

FIG. 19F

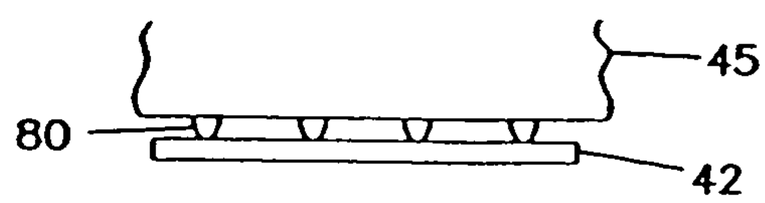

FIG. 20A

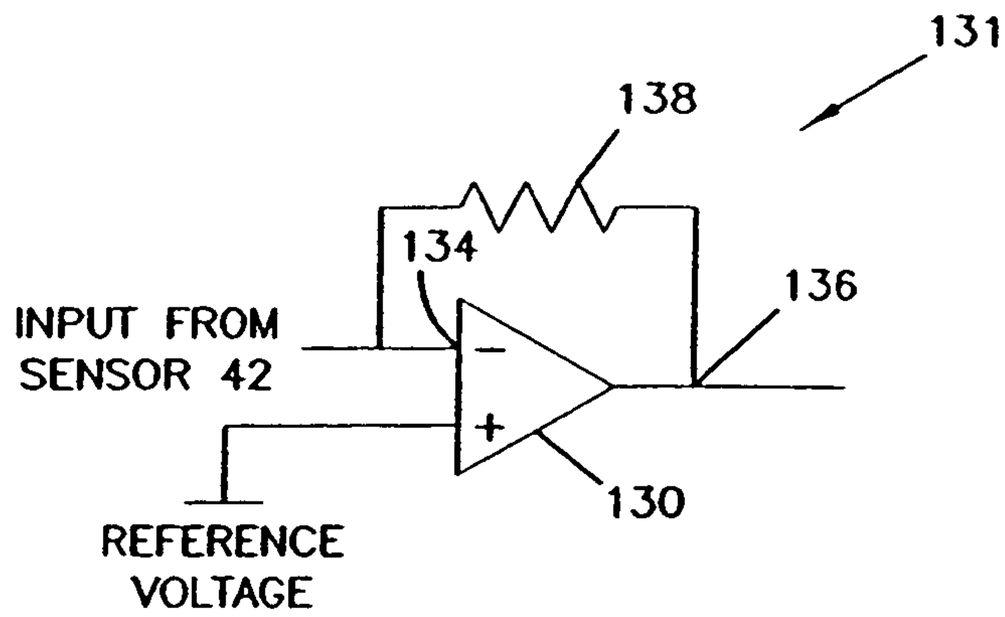

FIG. 20B

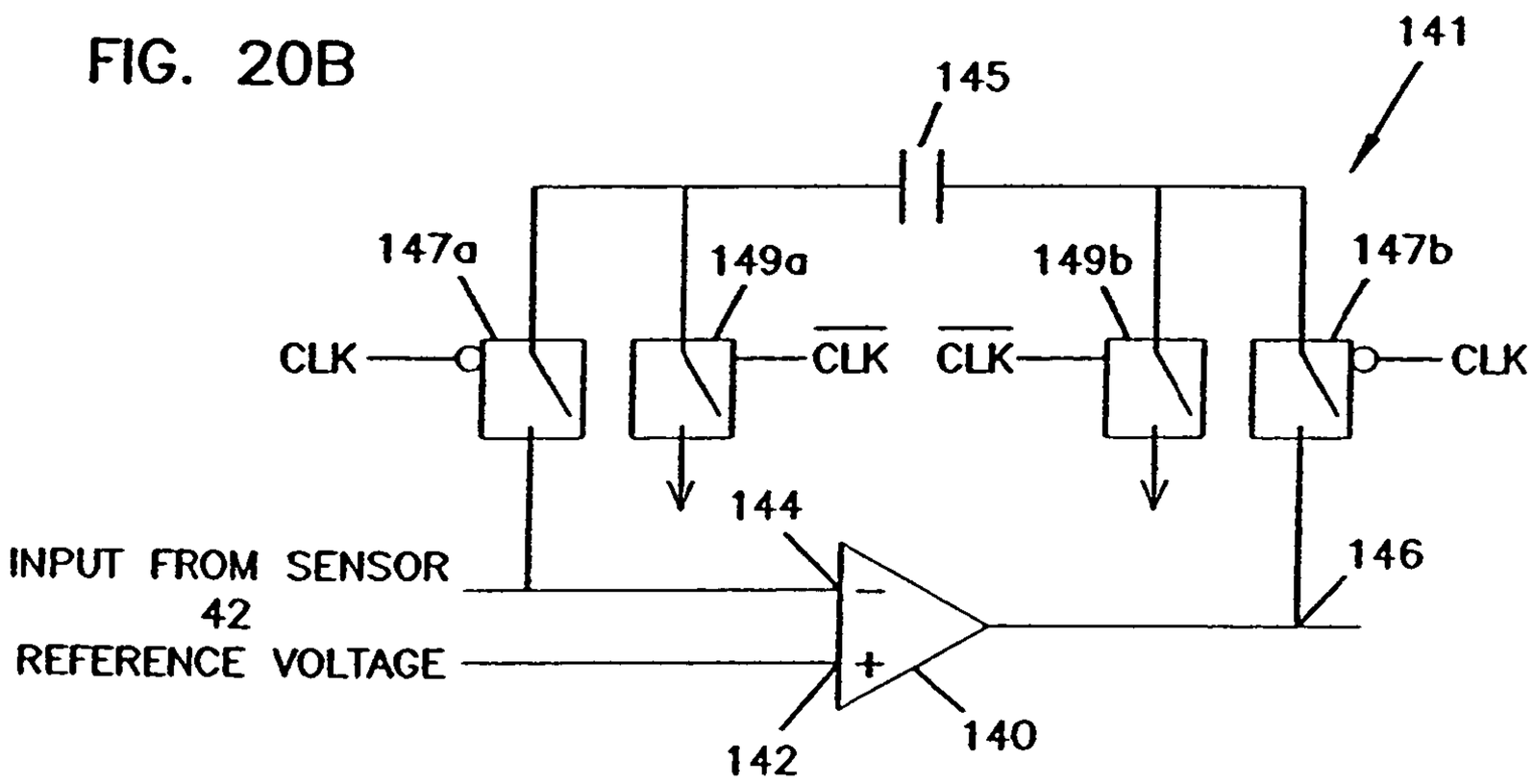

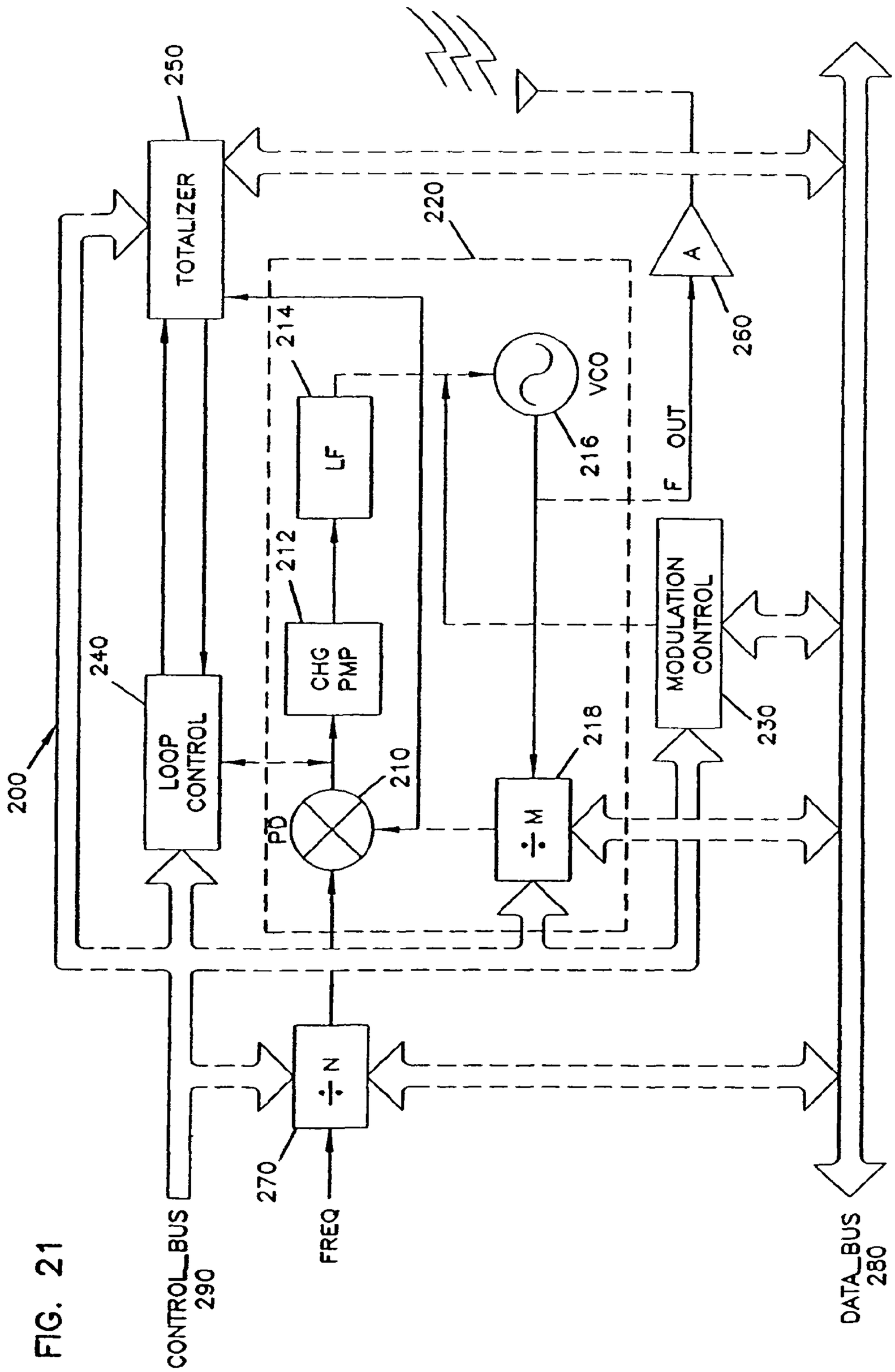
200
250
TOTALIZER
220
LOOP CONTROL
240
CHG PMP
212
LF
214
PD
210
VCO
216
÷ M
218
A
260
F OUT
MODULATION CONTROL
230
÷ N
270
FREQ
CONTROL_BUS 290
DATA_BUS 280

FIG. 21

FIG. 22

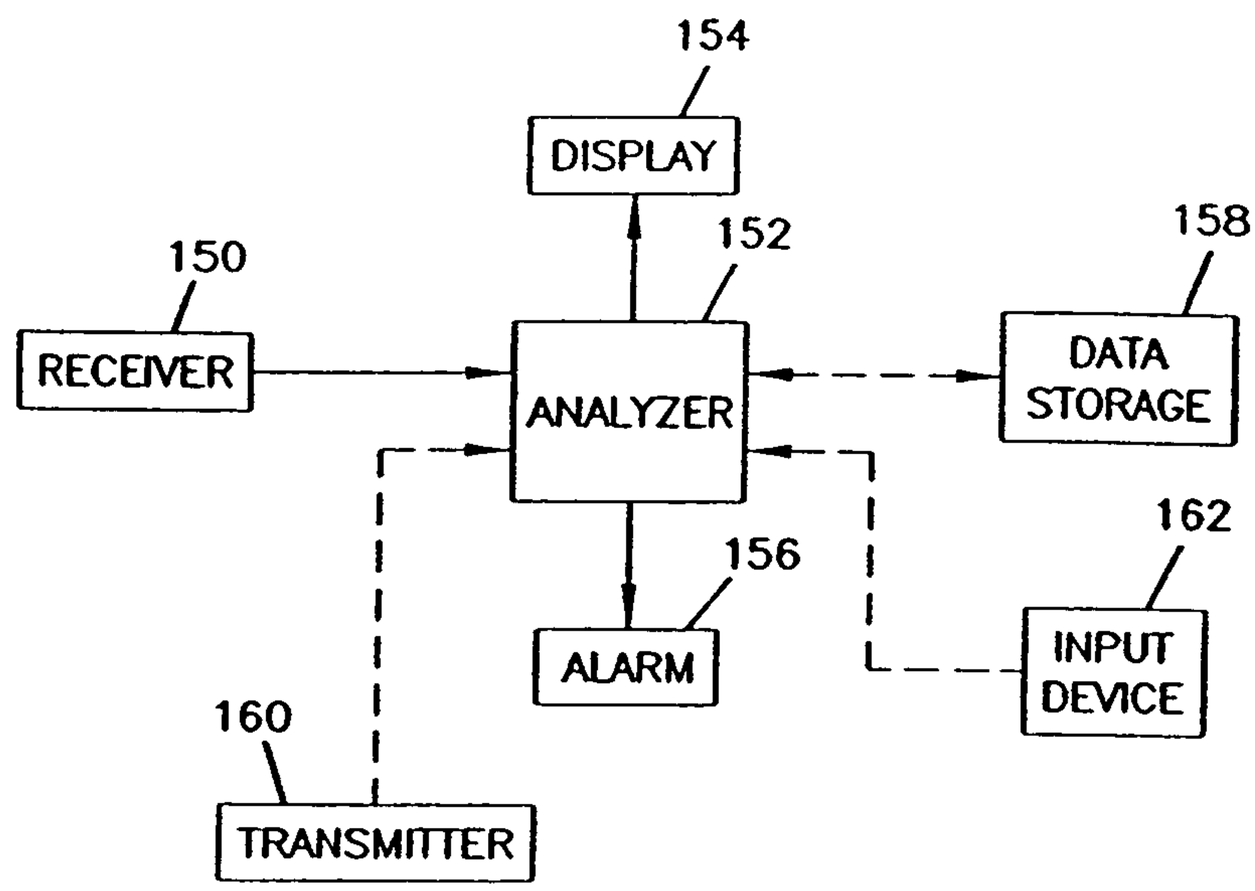
154
DISPLAY
152
158
150
RECEIVER
ANALYZER
DATA STORAGE
162
156
ALARM
INPUT DEVICE
160
TRANSMITTER

FIG. 23

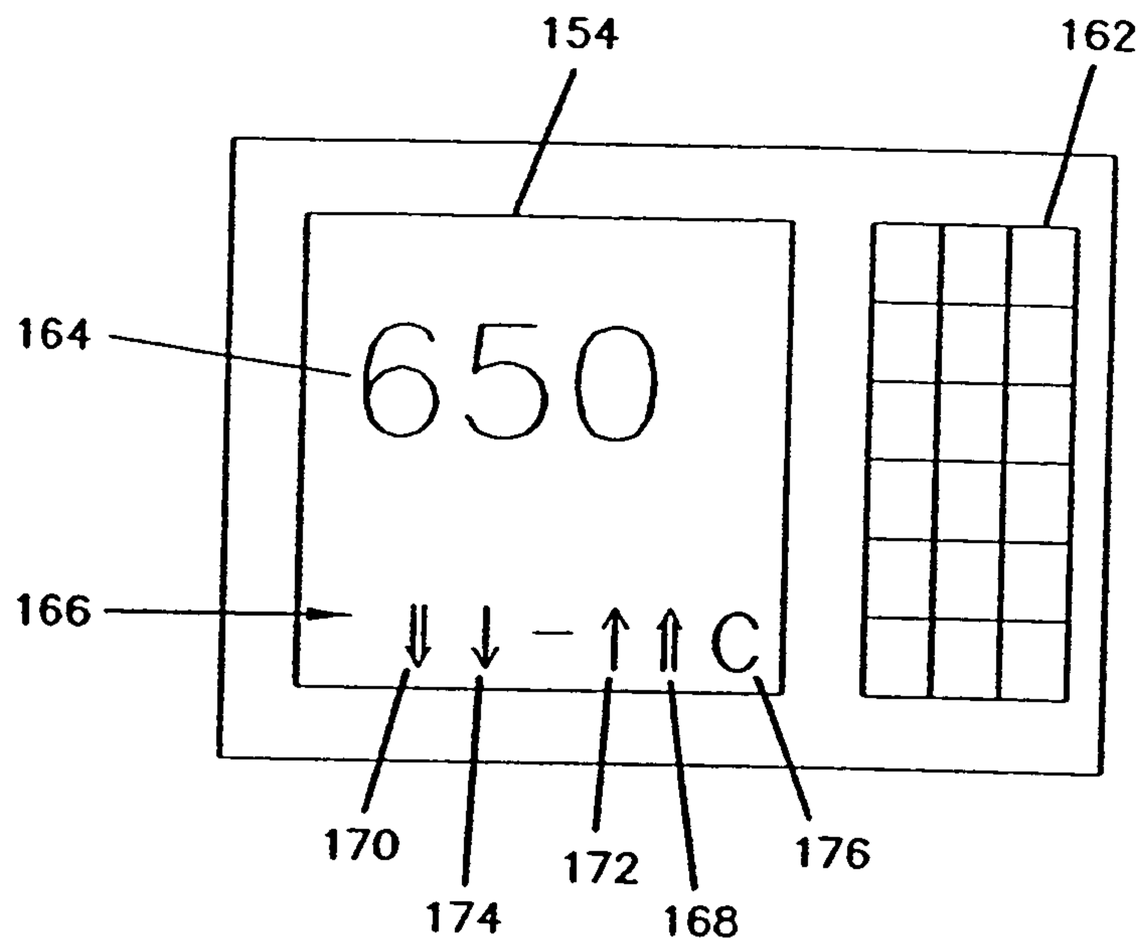

FIG. 24

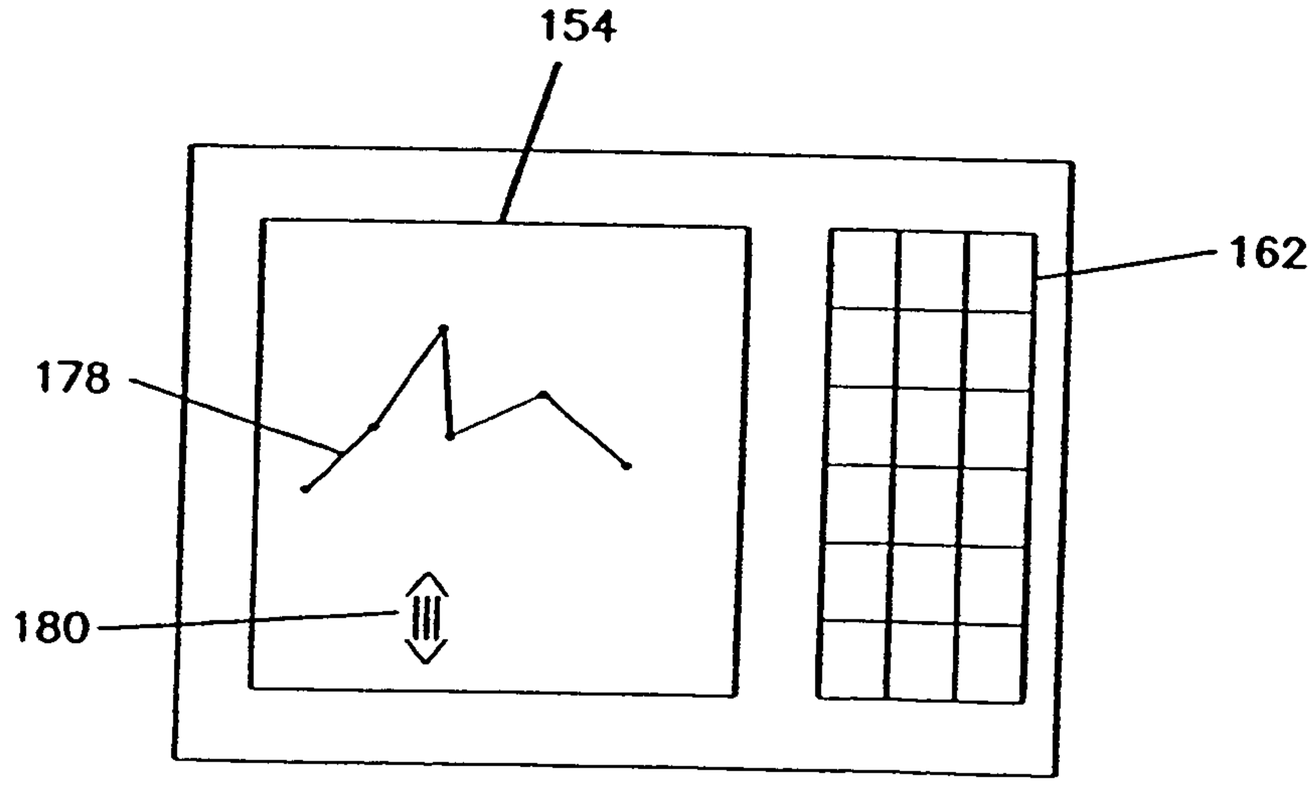

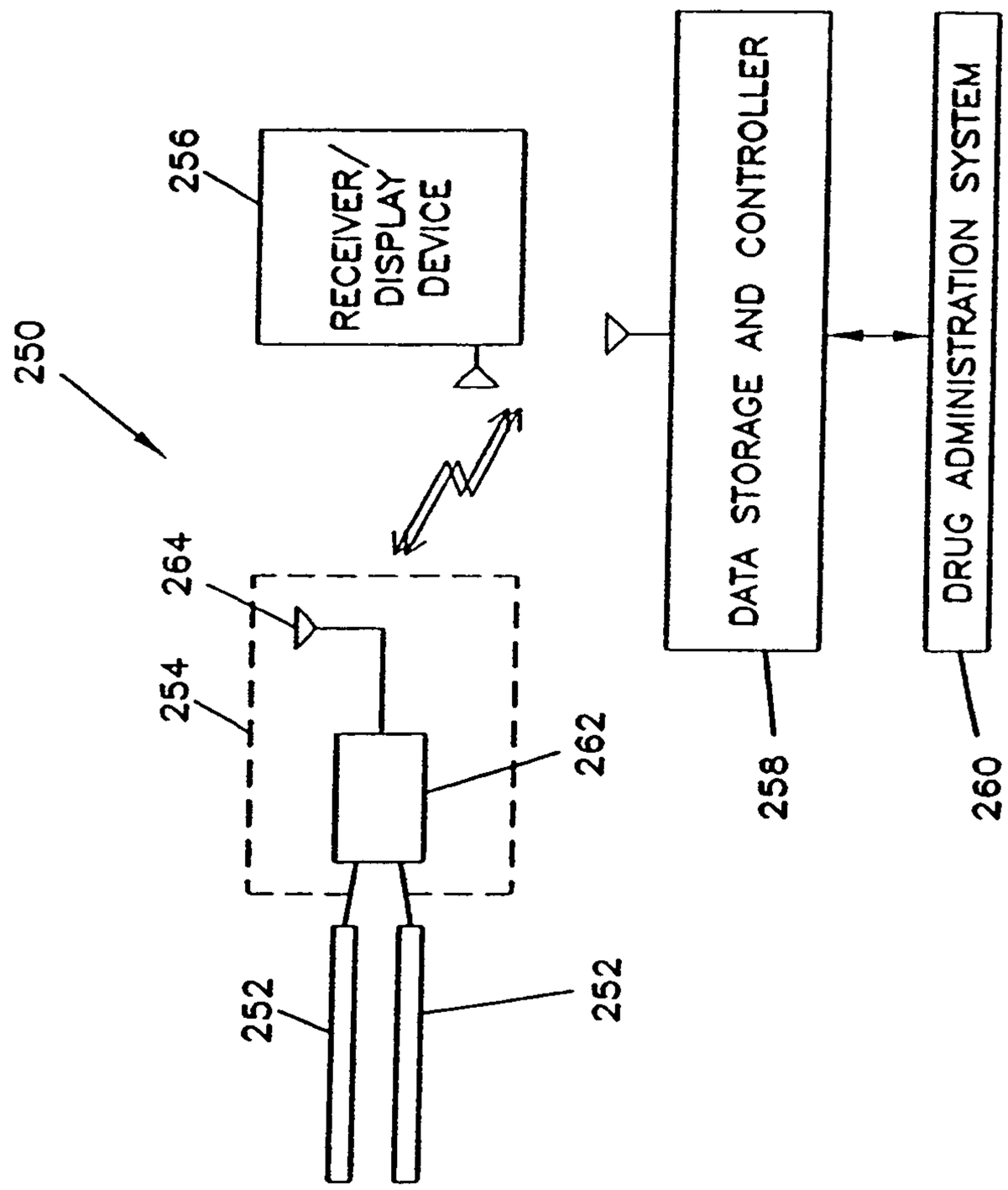
250
256
RECEIVER/
DISPLAY
DEVICE
264
254
262
252
252
DATA STORAGE AND CONTROLLER
258
DRUG ADMINISTRATION SYSTEM
260

FIG. 25

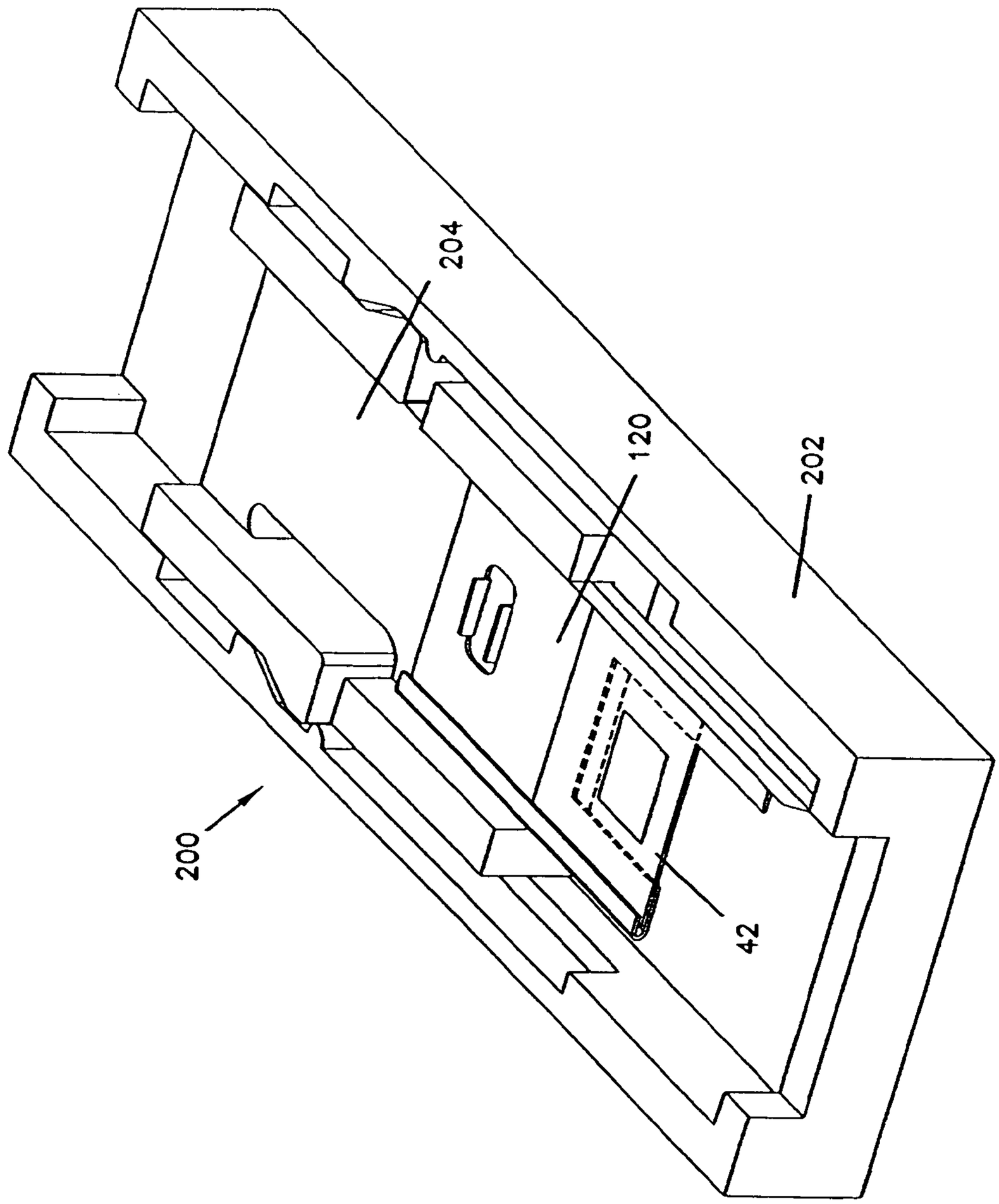

FIG. 26

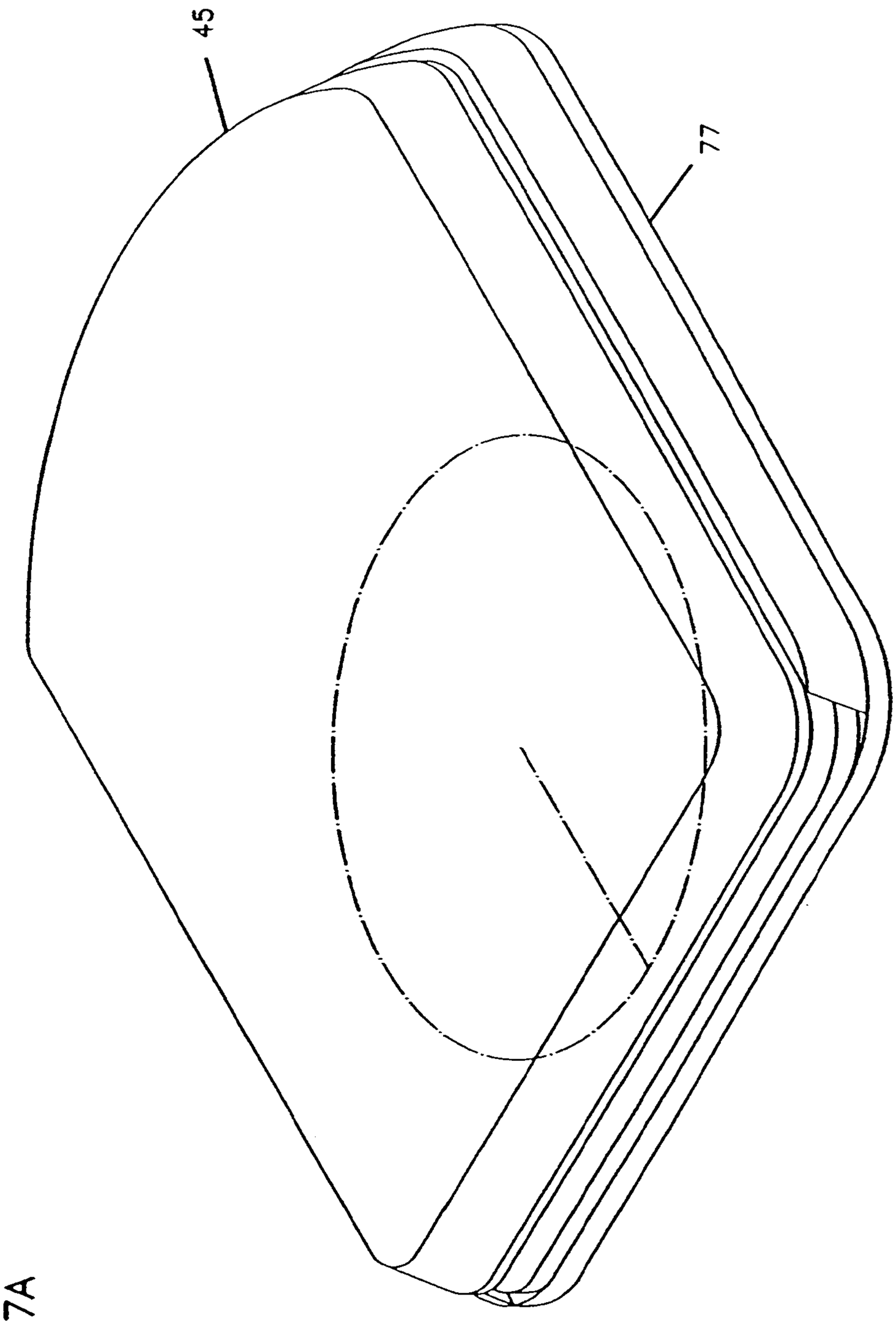

FIG. 27A

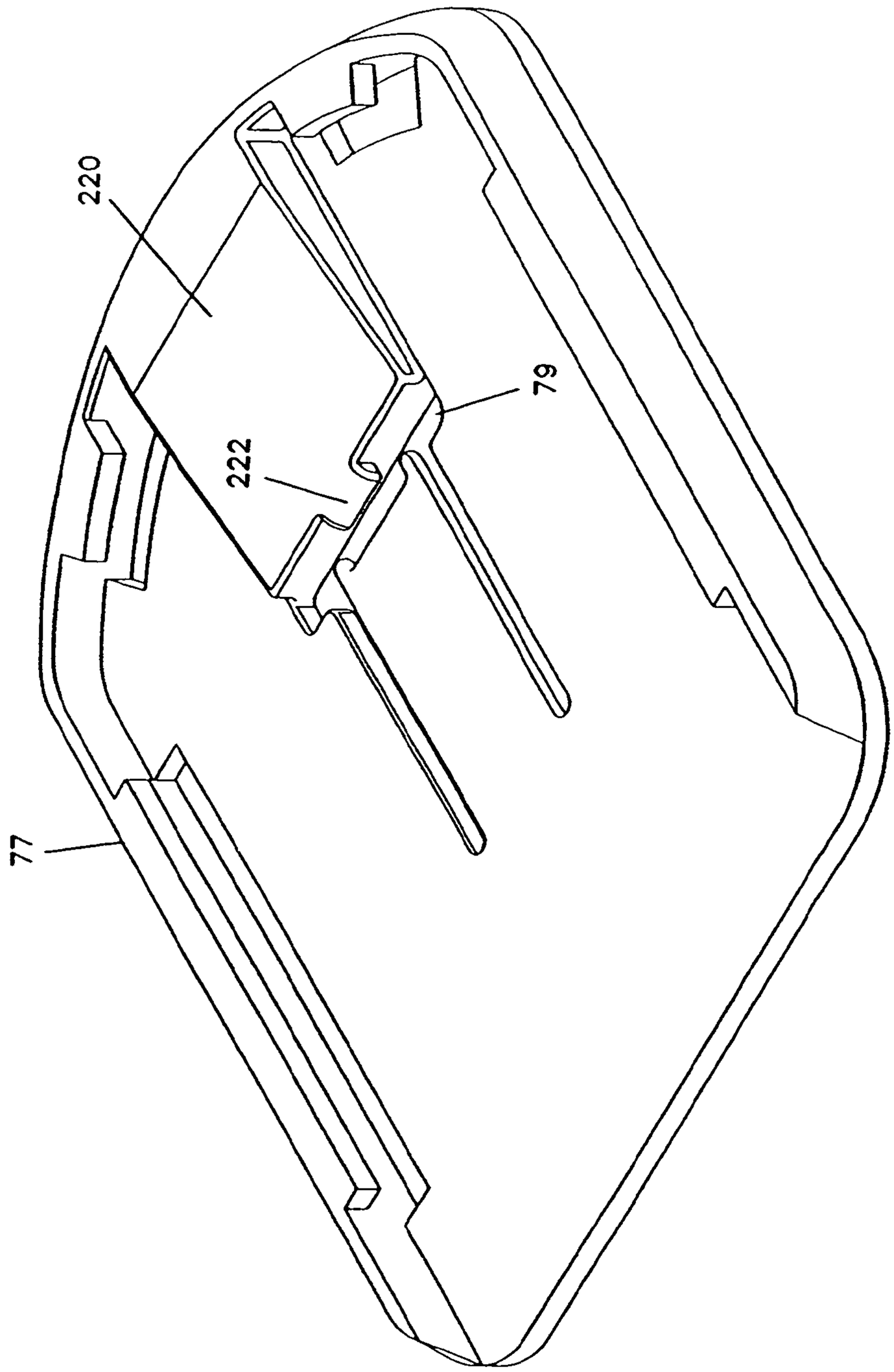

FIG. 27B

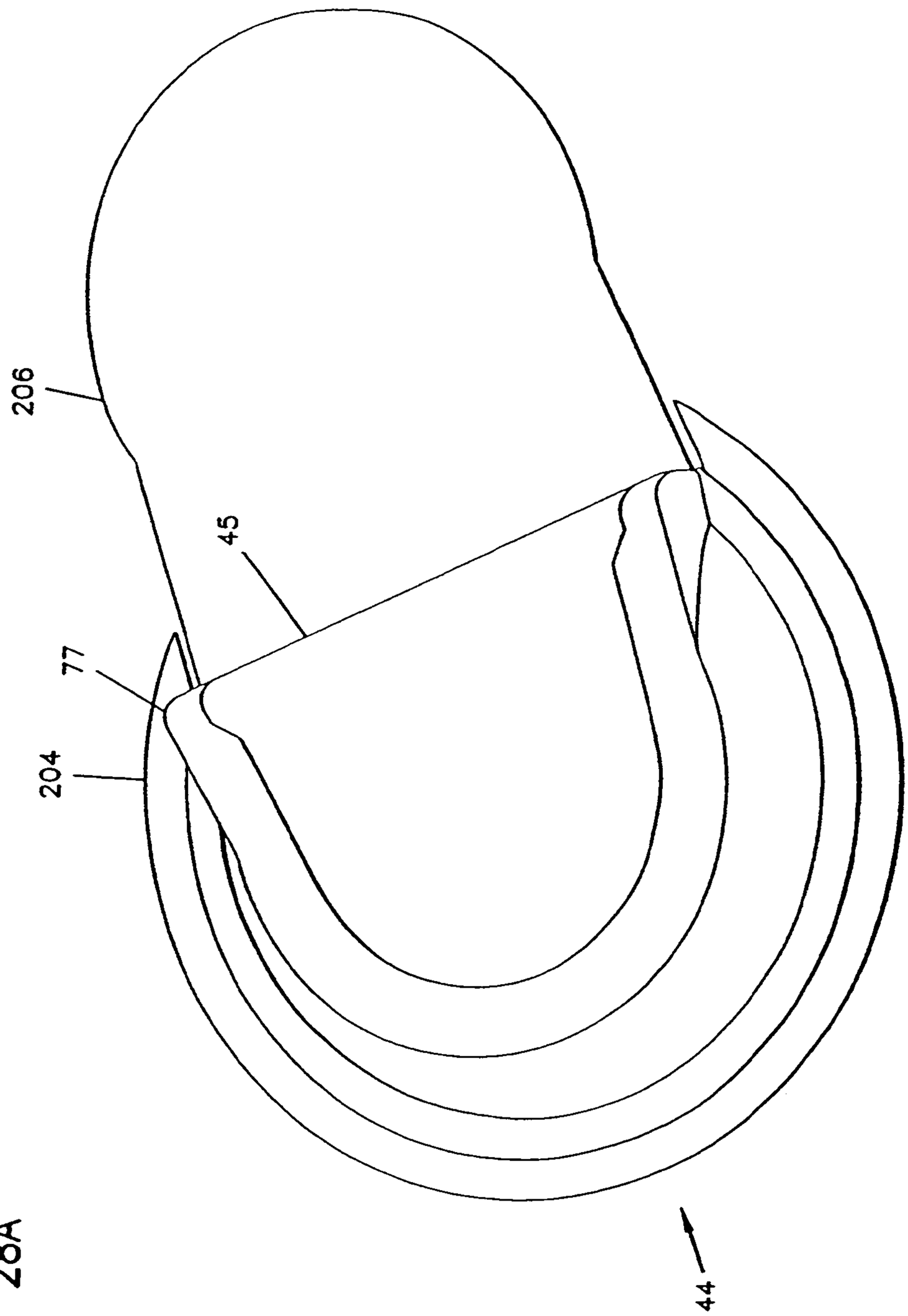

FIG. 28A

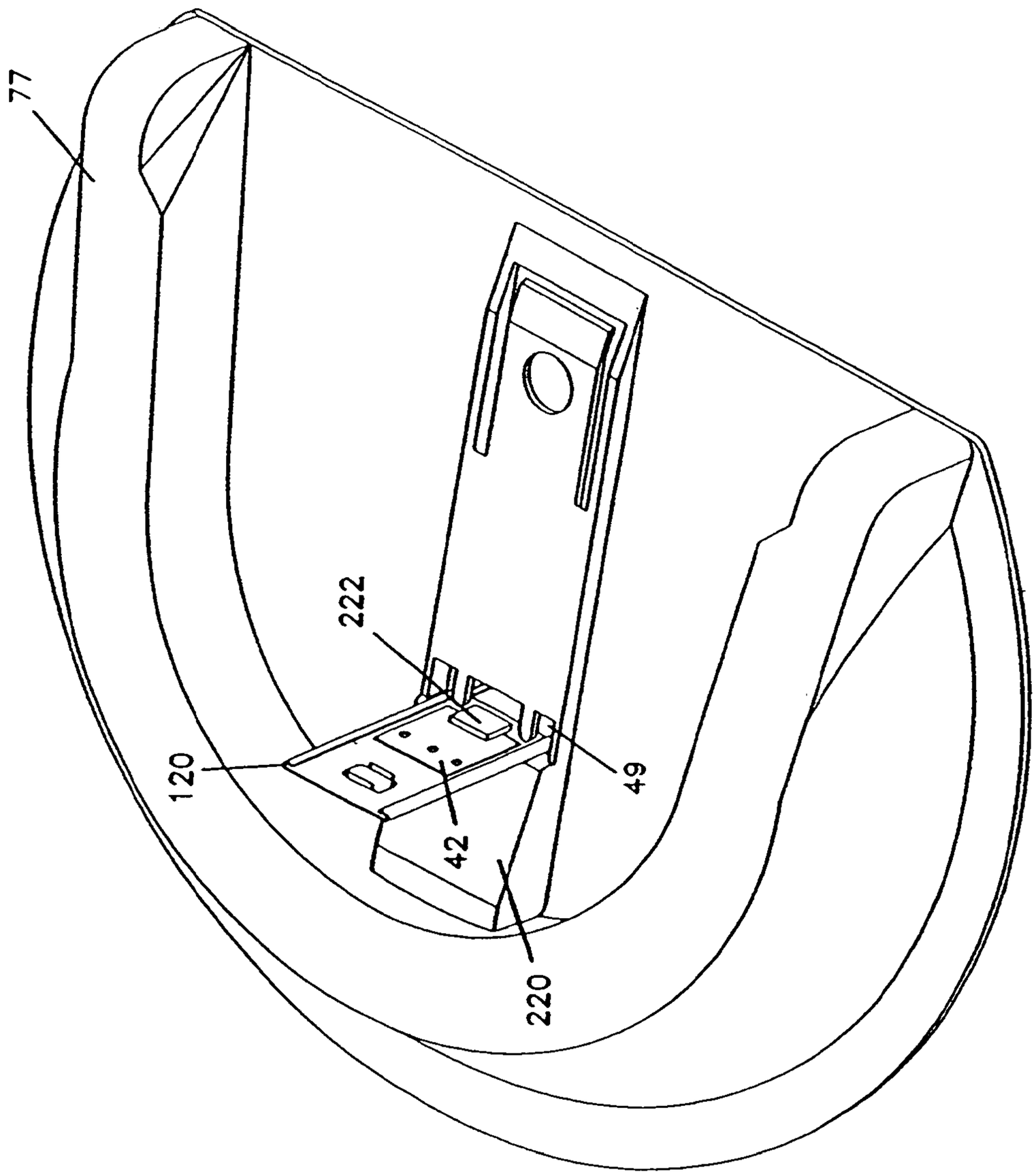

FIG. 28B

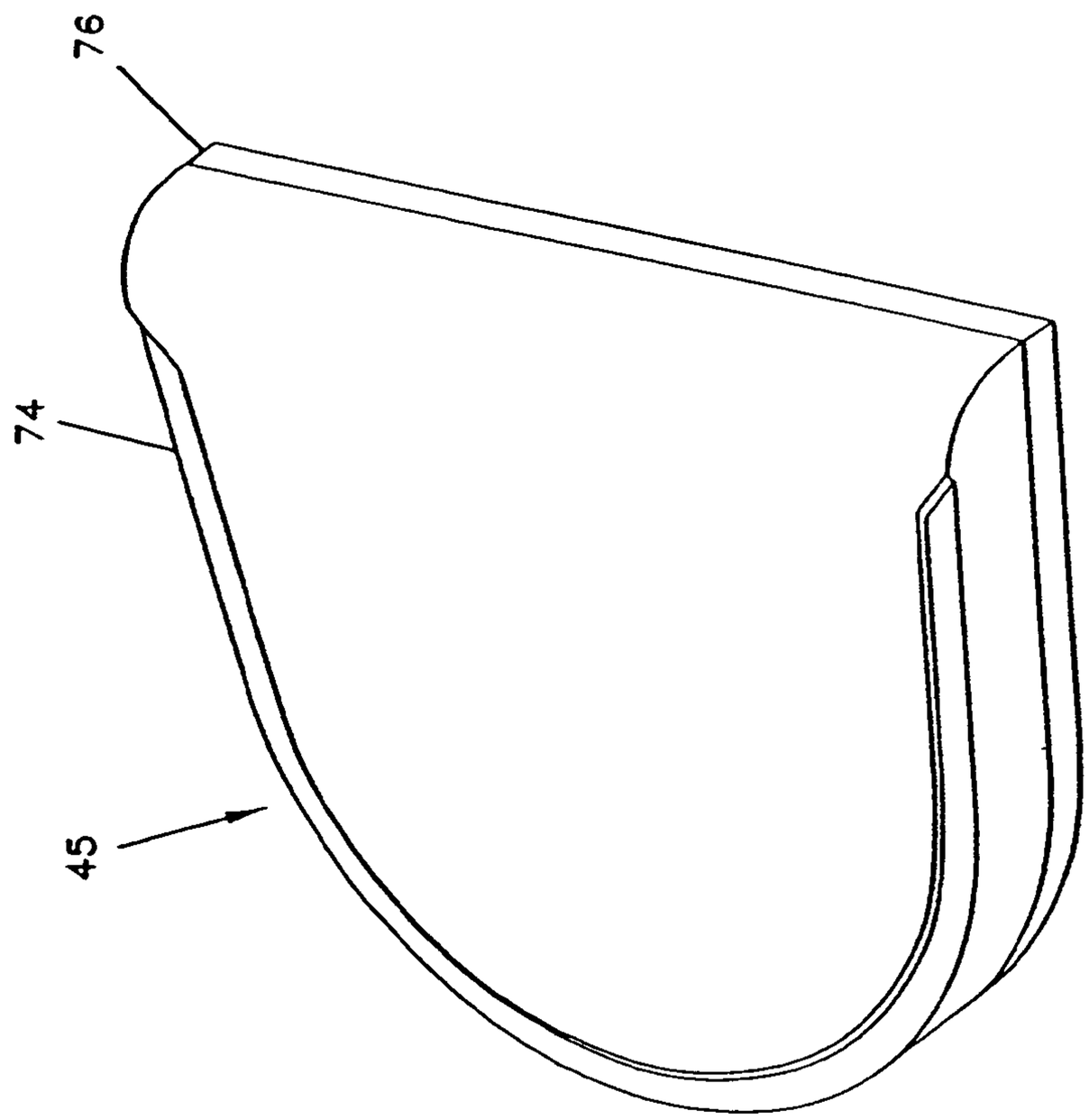

FIG. 28C

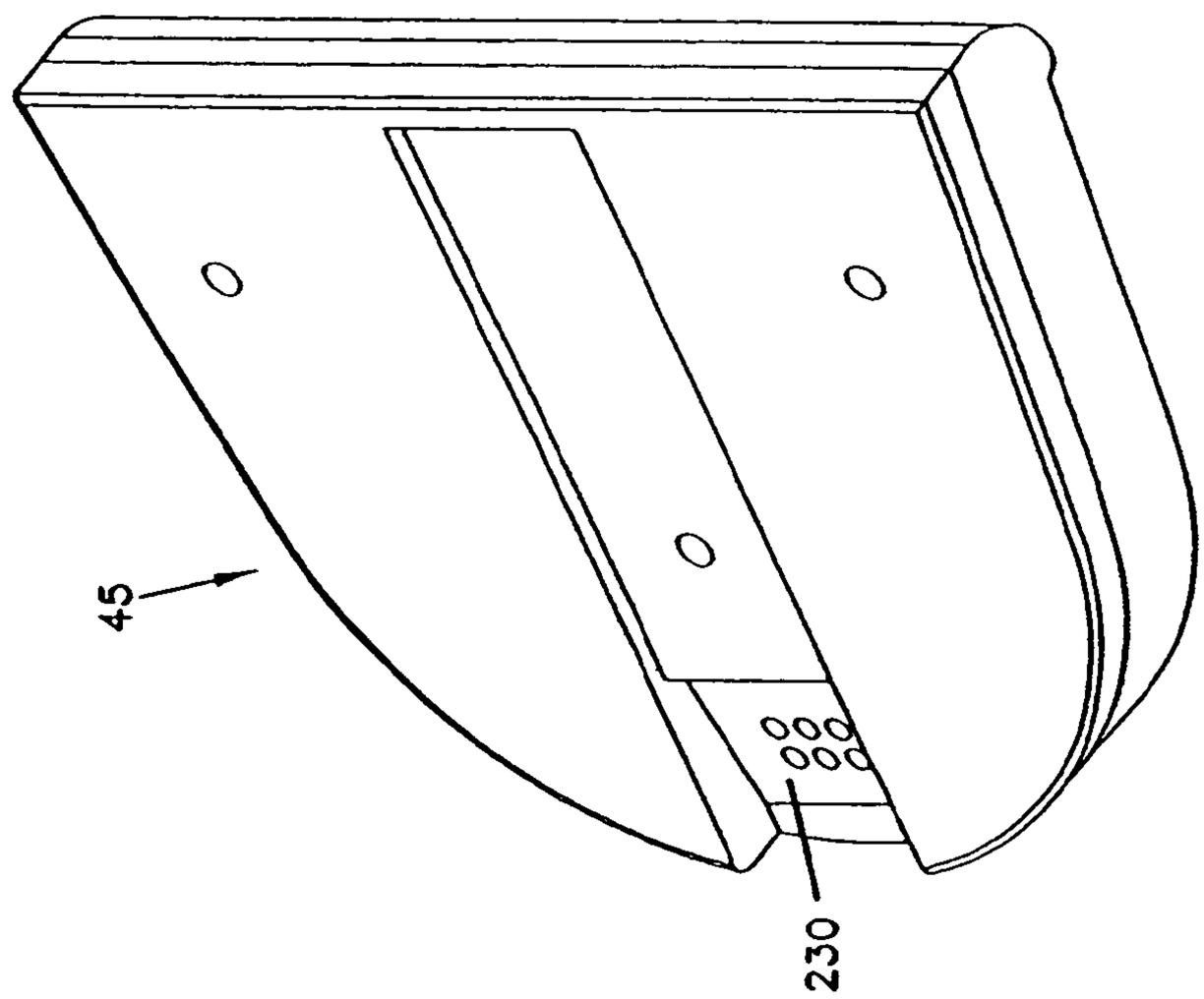

FIG. 28D

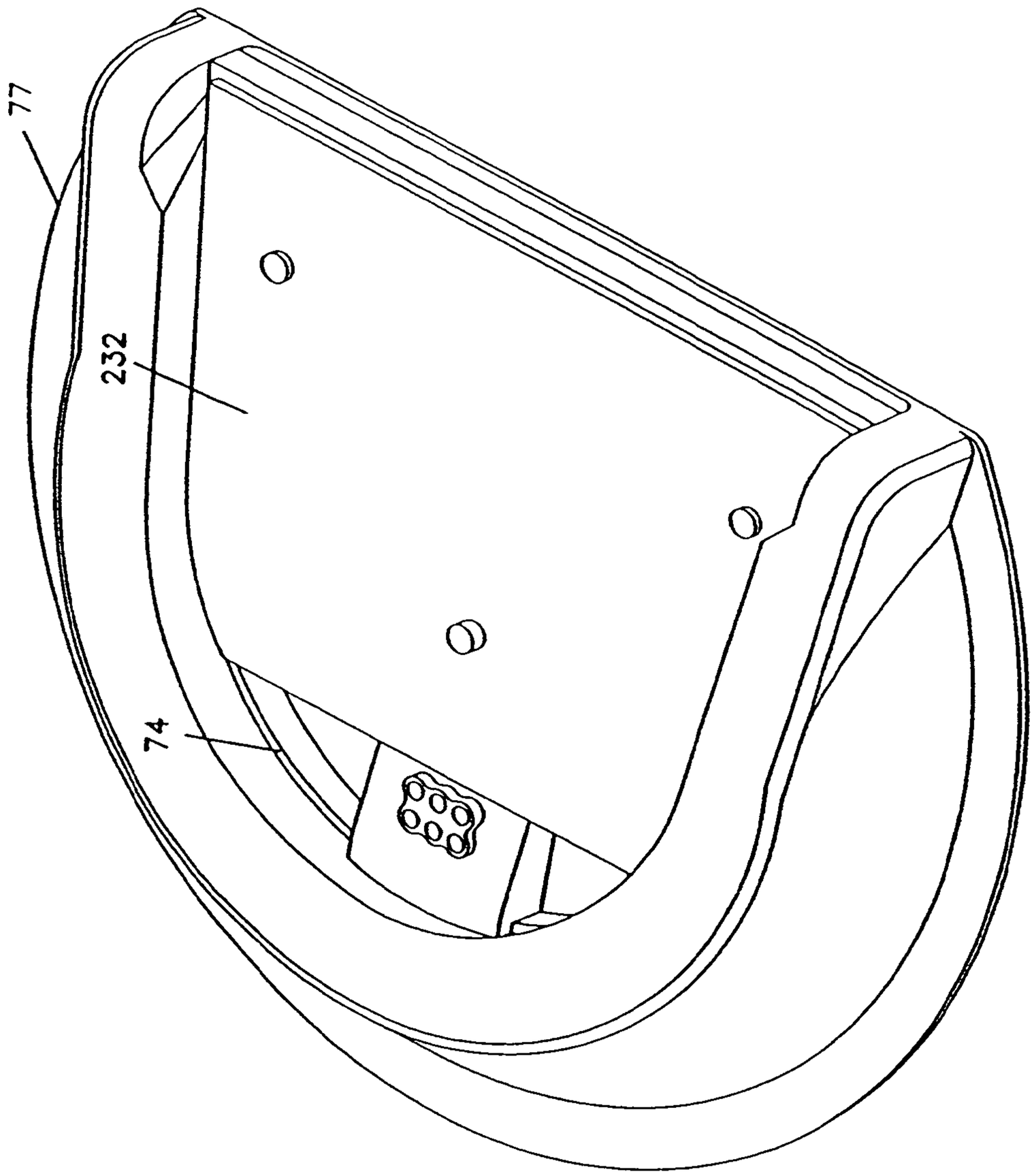

FIG. 28E

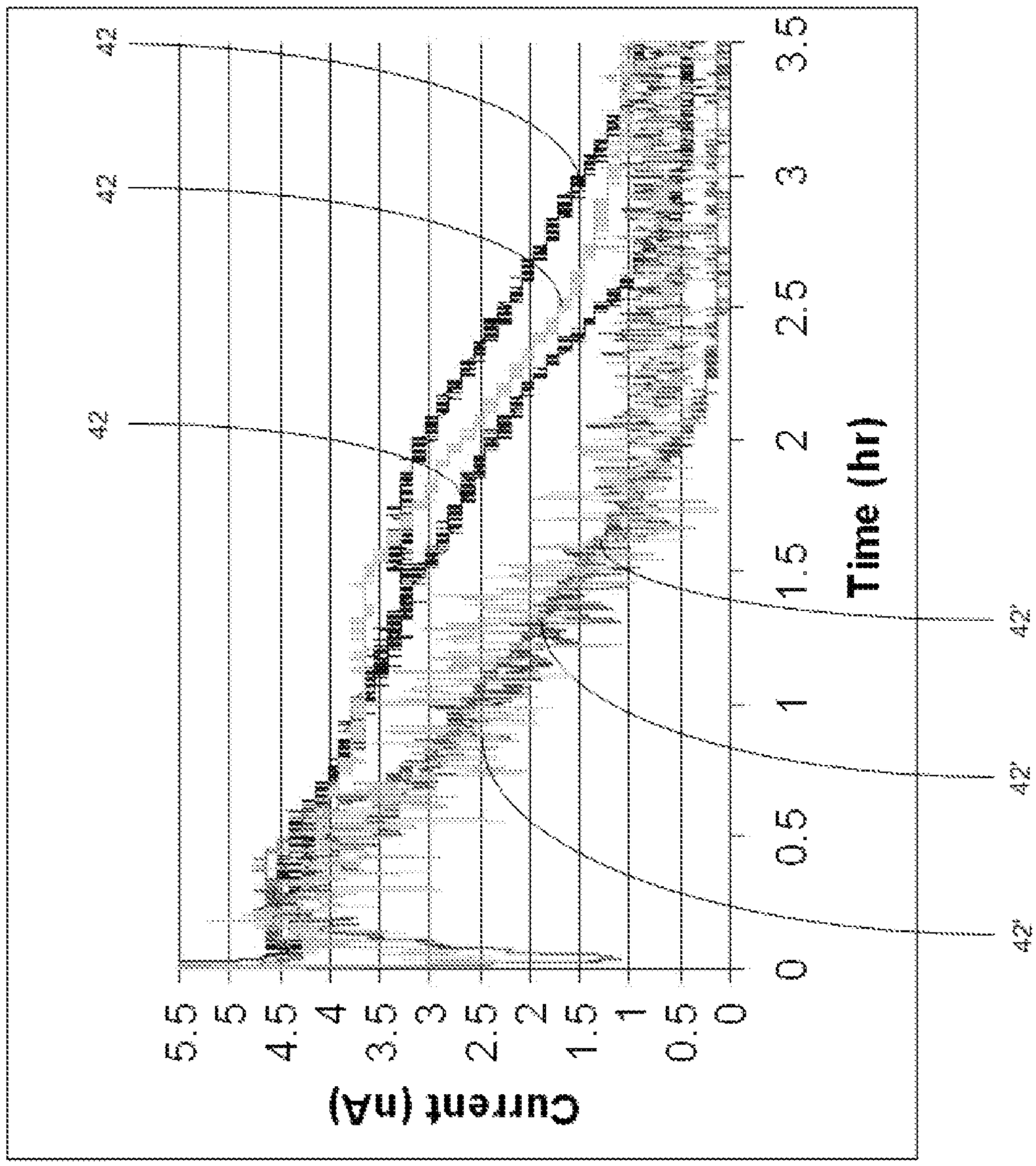
Current (nA)
5.5
5.0
4.5
4.0
3.5
3.0
2.5
2.0
1.5
1.0
0.5
0
0
0.5
1
1.5
2
2.5
3
3.5
Time (hr)
42
42
42
42'
42'
42'

FIG. 29A

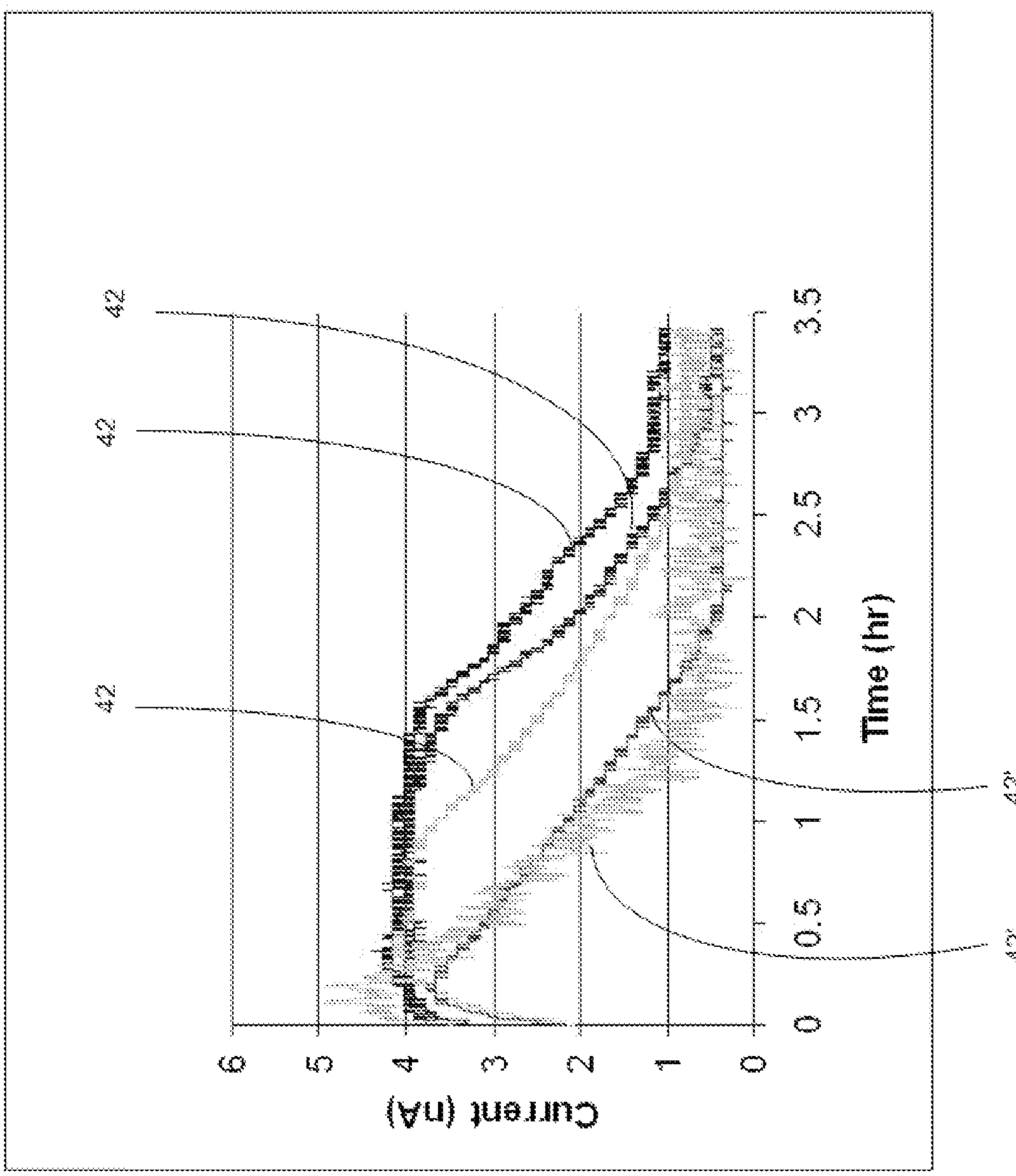

FIG. 29B

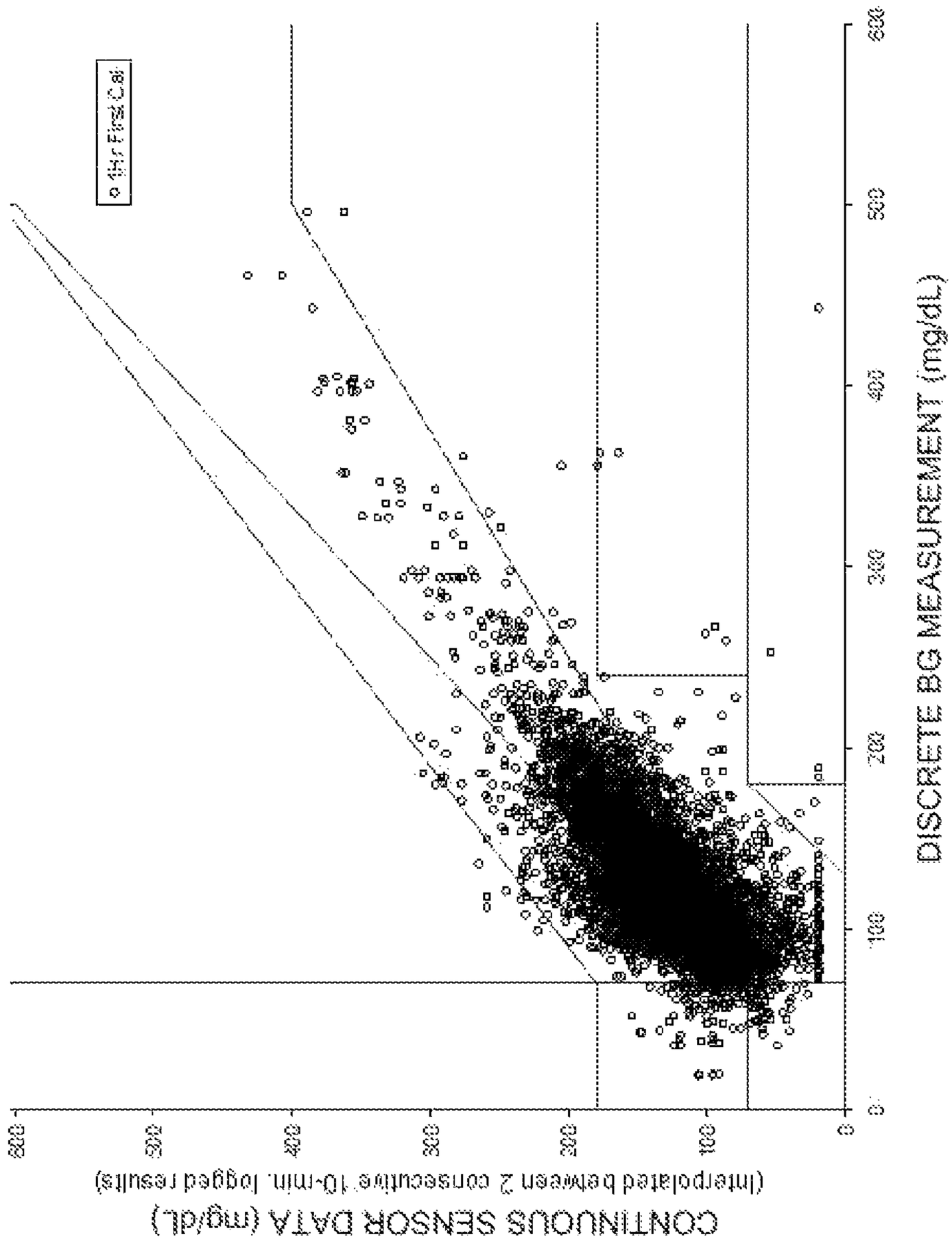
1Hr First Cal
CONTINUOUS SENSOR DATA (mg/dL)
(Interpolated between 2 consecutive 10-min. logged results)
DISCRETE BG MEASUREMENT (mg/dL)
0
100
200
300
400
500
600

FIG. 30

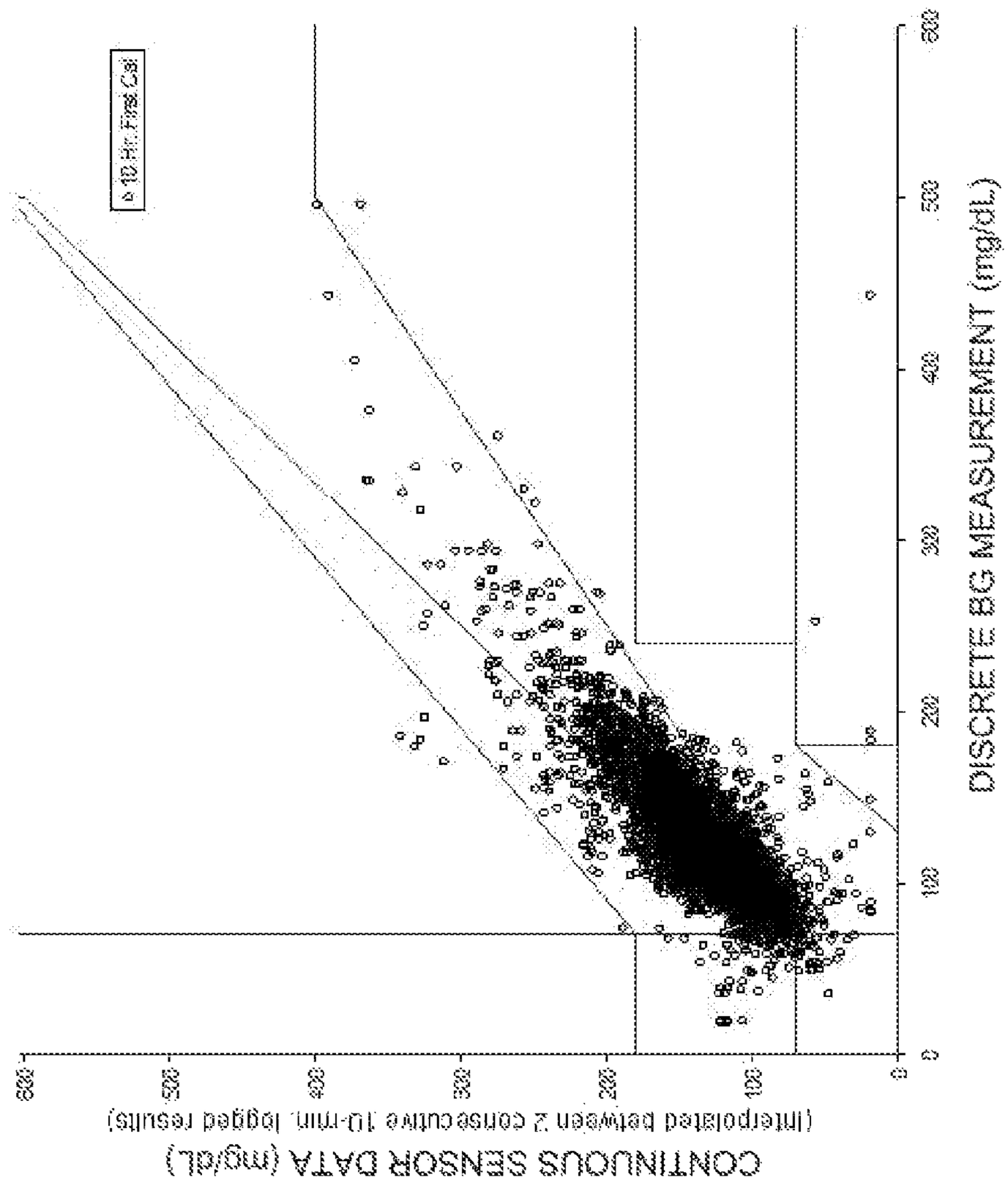
10 Hr. First Cal
CONTINUOUS SENSOR DATA (mg/dL)
(interpolated between 2 consecutive 10-min. logged results)
DISCRETE BG MEASUREMENT (mg/dL)
0
100
200
300
400
500
600

FIG. 31

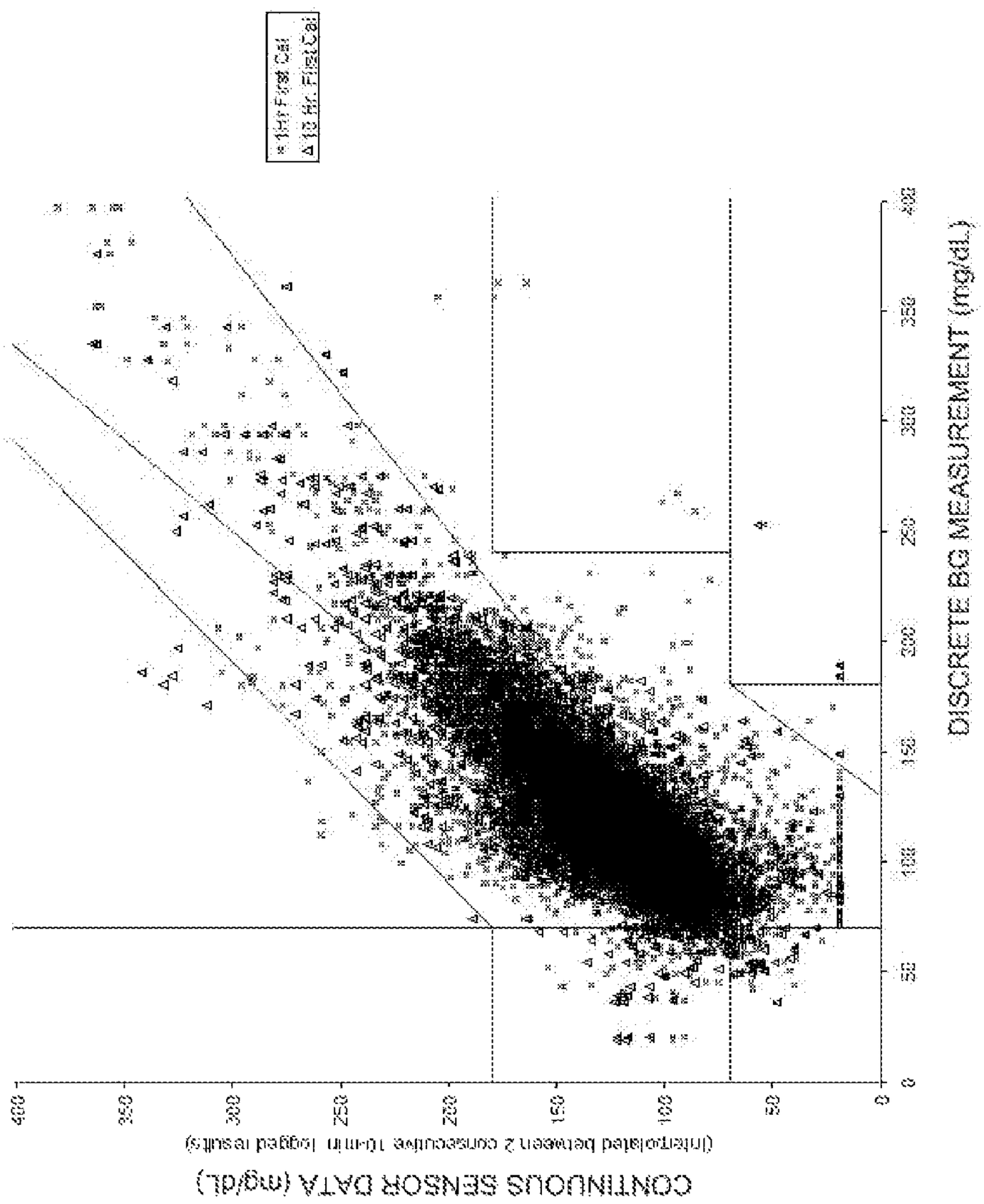
1Hr First Cal
10 Hr. First Cal
CONTINUOUS SENSOR DATA (mg/dL)
(Interpolated between 2 consecutive 1-min logged results)
DISCRETE BG MEASUREMENT (mg/dL)
0
50
100
150
200
250
300
350
400

FIG. 32

Condition		A	B	C	D	E
1 Hr. First Cal	# PP	12043	3751	15	102	4
	% of Total	75.7	23.6	0.1	0.6	0.0
10 Hr. First Cal	# PP	9821	1640	7	74	4
	% of Total	85.1	14.2	0.1	0.6	0.0

Condition	# of PP	Slope	Intercept	R^2	MARD	RMSE
1 Hr. First Cal	15915	0.834	23.0	0.567	0.153	0.229
10 Hr. First Cal	11546	0.911	15.8	0.708	0.118	0.189

			Day			
1stCalTime	# Sensors	Data	1	2	3	All
1hrNormal	387	Avg ARD	0.163	0.135	0.138	0.153
		StdDevp ARD	0.191	0.172	0.135	0.170
		#PP	5599	5189	5127	15915
10hrDelayed	372	Avg ARD	0.113	0.113	0.125	0.118
		StdDevp ARD	0.127	0.167	0.130	0.147
		#PP	1394	5087	5065	11546

FIG. 33

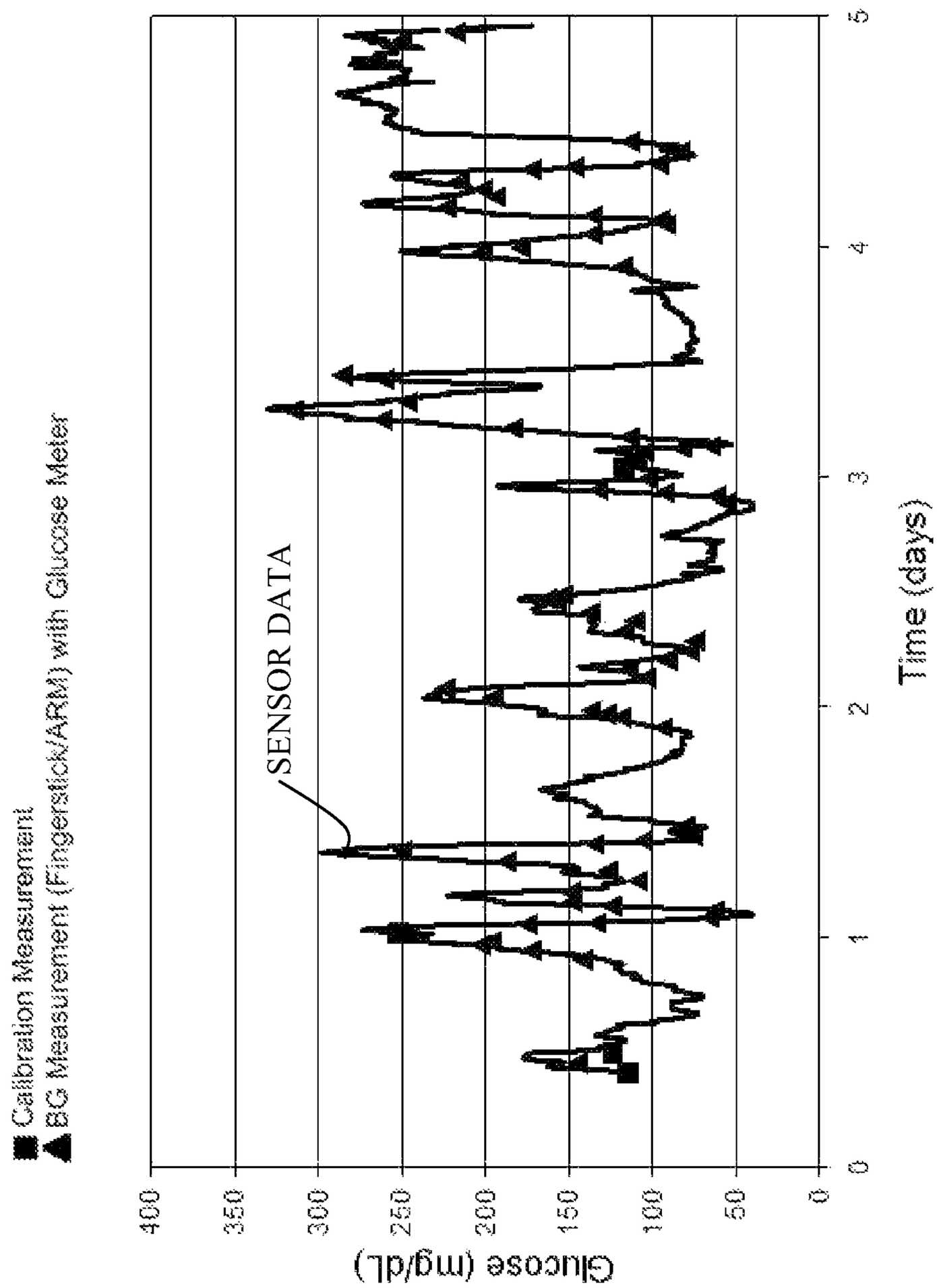
Calibration Measurement
BG Measurement (Fingerstick/ARM) with Glucose Meter
SENSOR DATA
Glucose (mg/dL)
400
350
300
250
200
150
100
50
0
0
1
2
3
4
5
Time (days)

FIG. 34

Day	1	2	3	4	5	Overall
MARD	22.5%	17.0%	14.5%	13.9%	13.0%	15.5%
n	173	462	417	443	339	1834

FIG. 35

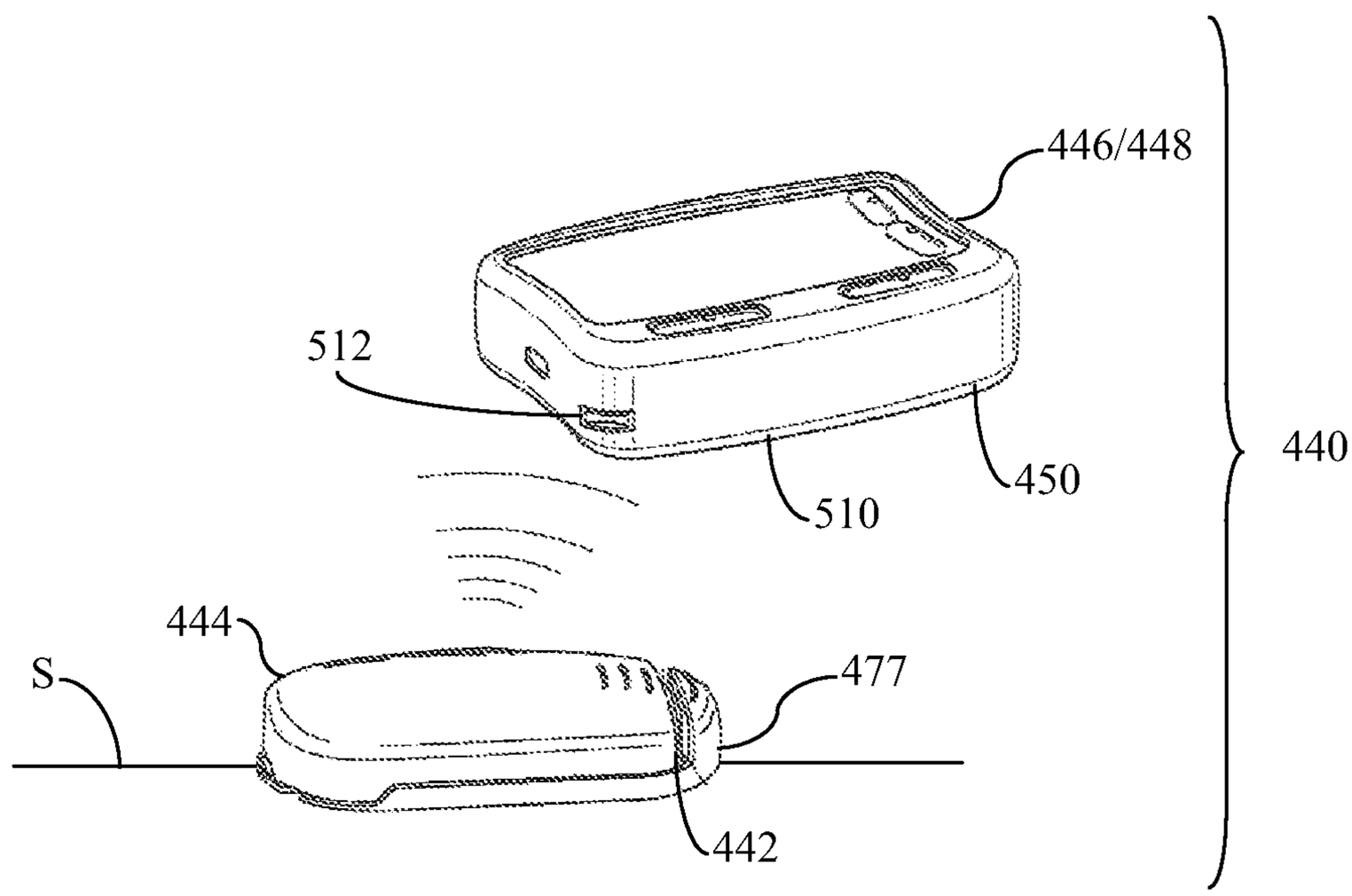

FIG. 36A

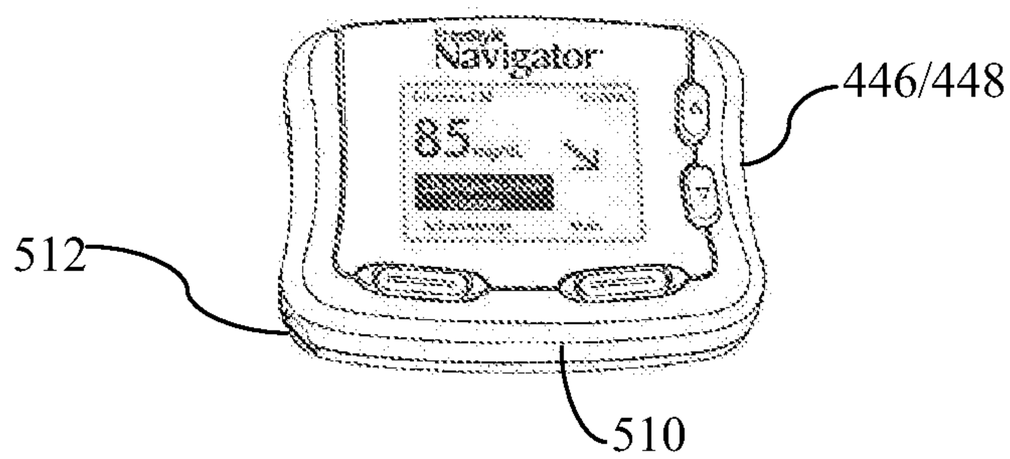

FIG. 36B

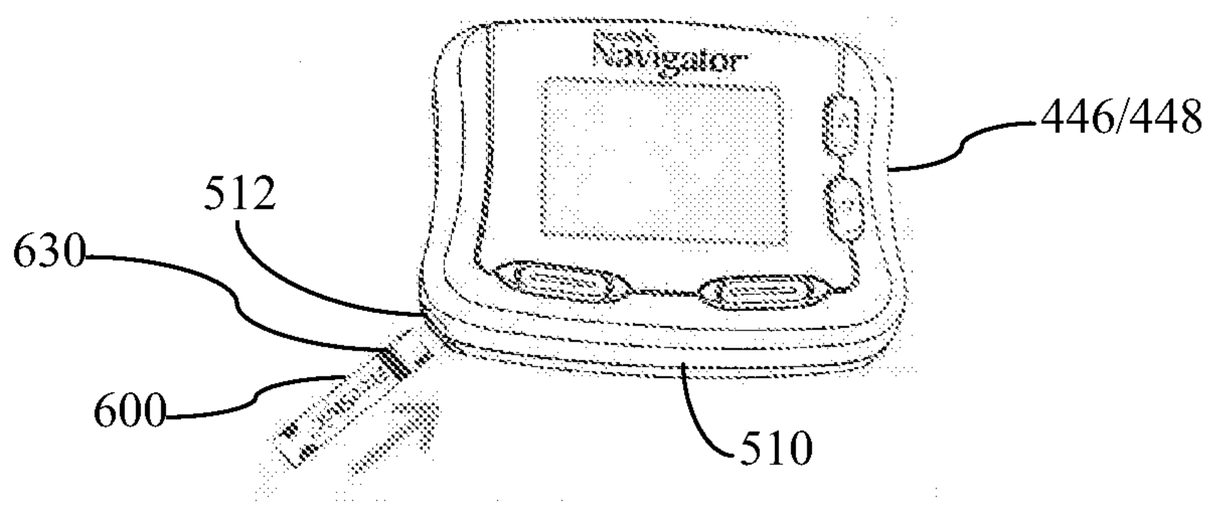

FIG. 36C

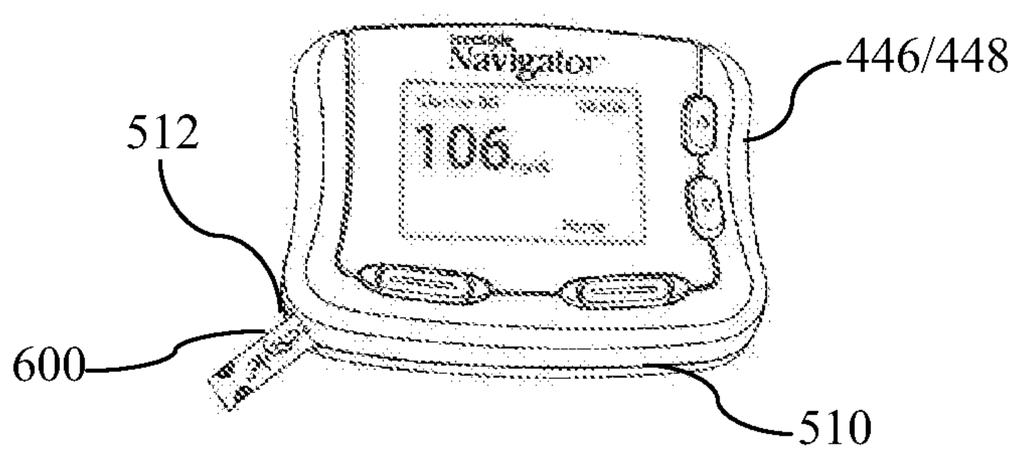

FIG. 36D

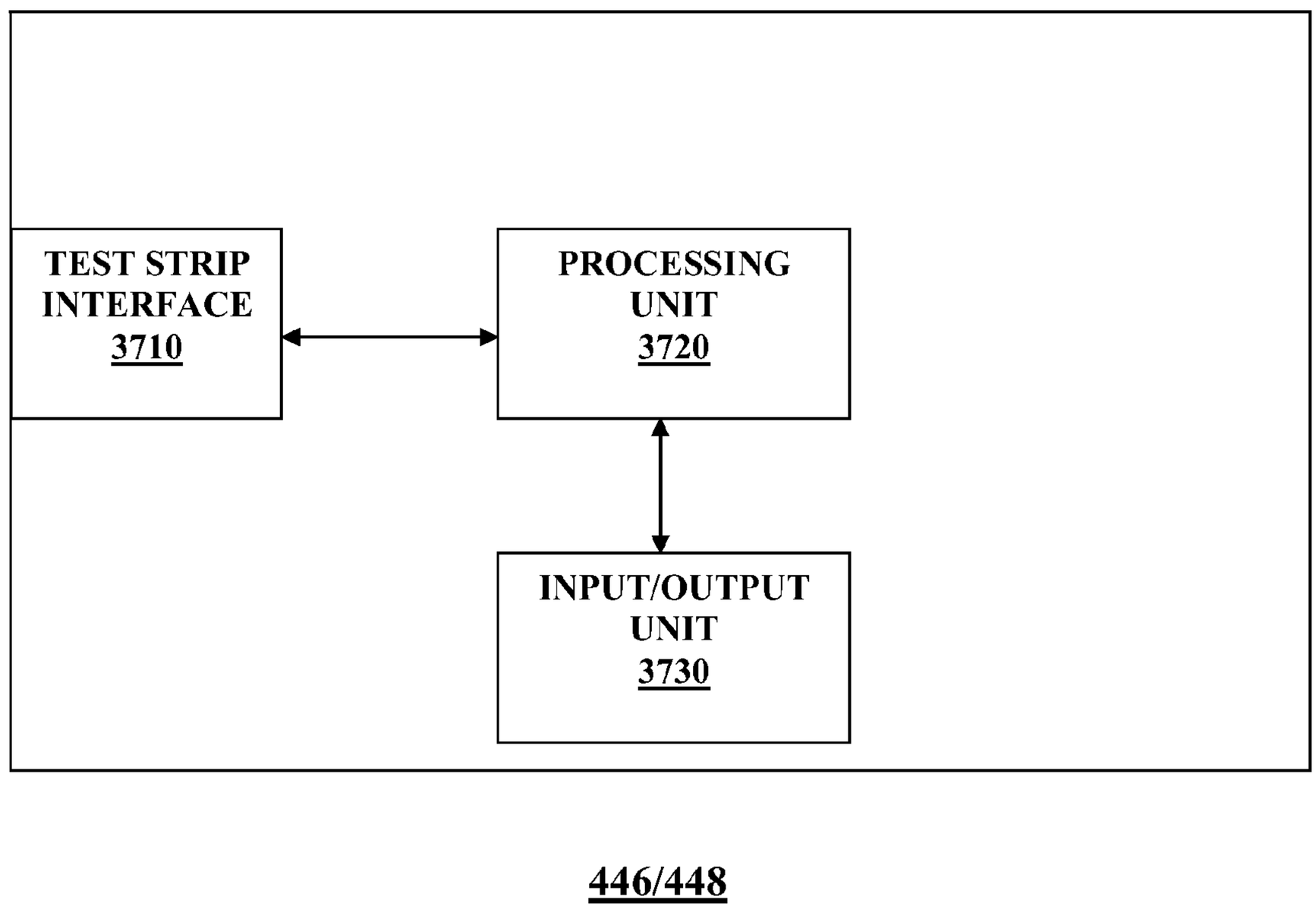
TEST STRIP INTERFACE 3710
PROCESSING UNIT 3720
INPUT/OUTPUT UNIT 3730
446/448

FIG. 37

ANALYTE MONITORING DEVICE AND METHODS OF USE

RELATED APPLICATIONS

The present application is a continuation of U.S. patent application Ser. No. 12/495,807 filed Jun. 30, 2009, now U.S. Pat. No. 8,465,425, which is a continuation in part of application Ser. No. 11/265,787 filed on Nov. 1, 2005, the disclosures of each of which are hereby incorporated by reference for all purposes.

TECHNICAL FIELD

The present invention is, in general, directed to devices and methods for the in vivo monitoring of an analyte, such as glucose or lactate. More particularly, the present invention relates to devices and methods for the in vivo monitoring of an analyte using an electrochemical sensor to provide information to a patient about the level of the analyte.

BACKGROUND

The monitoring of the level of glucose or other analytes, such as lactate or oxygen, in certain individuals is vitally important to their health. High or low levels of glucose or other analytes may have detrimental effects. The monitoring of glucose is particularly important to individuals with diabetes, as they must determine when insulin is needed to reduce glucose levels in their bodies or when additional glucose is needed to raise the level of glucose in their bodies.

A conventional technique used by many diabetics for personally monitoring their blood glucose level includes the periodic drawing of blood, the application of that blood to a test strip, and the determination of the blood glucose level using colormetric, electrochemical, or photometric detection. This technique does not permit continuous or automatic monitoring of glucose levels in the body, but typically must be performed manually on a periodic basis. Unfortunately, the consistency with which the level of glucose is checked varies widely among individuals. Many diabetics find the periodic testing inconvenient and they sometimes forget to test their glucose level or do not have time for a proper test. In addition, some individuals wish to avoid the pain associated with the test. These situations may result in hyperglycemic or hypoglycemic episodes. An in vivo glucose sensor that continuously or automatically monitors the individual's glucose level would enable individuals to more easily monitor their glucose, or other analyte, levels.

A variety of devices have been developed for continuous or automatic monitoring of analytes, such as glucose, in the blood stream or interstitial fluid. A number of these devices use electrochemical sensors which are directly implanted into a blood vessel or in the subcutaneous tissue of a patient. However, these devices are often difficult to reproducibly and inexpensively manufacture in large numbers. In addition, these devices are typically large, bulky, and/or inflexible, and many cannot be used effectively outside of a controlled medical facility, such as a hospital or a doctor's office, unless the patient is restricted in his activities.

Some devices include a sensor guide which rests on or near the skin of the patient and may be attached to the patient to hold the sensor in place. These sensor guides are typically bulky and do not allow for freedom of movement. In addition, the sensor guides or the sensors include cables or wires for connecting the sensor to other equipment to direct the signals from the sensors to an analyzer. The size of the sensor guides and presence of cables and wires hinders the convenient use of these devices for everyday applications. There is a need for a small, compact device that can operate the sensor and provide signals to an analyzer without substantially restricting the movements and activities of a patient.

The patient's comfort and the range of activities that can be performed while the sensor is implanted are important considerations in designing extended-use sensors for continuous or automatic in vivo monitoring of the level of an analyte, such as glucose. There is a need for a small, comfortable device which can continuously monitor the level of an analyte, such as glucose, while still permitting the patient to engage in normal activities. Continuous and/or automatic monitoring of the analyte can provide a warning to the patient when the level of the analyte is at or near a threshold level. For example, if glucose is the analyte, then the monitoring device might be configured to warn the patient of current or impending hyperglycemia or hypoglycemia. The patient can then take appropriate actions.

SUMMARY

Generally, the present invention relates to methods and devices for the continuous and/or automatic in vivo monitoring of the level of an analyte using a subcutaneously implantable sensor. Many of these devices are small and comfortable when used, thereby allowing a wide range of activities. One embodiment is a sensor control unit having a housing adapted for placement on skin. The housing is also adapted to receive a portion of an electrochemical sensor. The sensor control unit includes two or more conductive contacts disposed on the housing and configured for coupling to two or more contact pads on the sensor. A transmitter is disposed in the housing and coupled to the plurality of conductive contacts for transmitting data obtained using the sensor. The sensor control unit may also include a variety of optional components, such as, for example, adhesive for adhering to the skin, a mounting unit, a receiver, a processing circuit, a power supply (e.g., a battery), an alarm system, a data storage unit, a watchdog circuit, and a temperature measurement circuit. Other optional components are described below.

Another embodiment of the invention is a sensor assembly that includes the sensor control unit described above. The sensor assembly also includes a sensor having at least one working electrode and at least one contact pad coupled to the working electrode or electrodes. The sensor may also include optional components, such as, for example, a counter electrode, a counter/reference electrode, a reference electrode, and a temperature probe. Other components and options for the sensor are described below.

A further embodiment of the invention is an analyte monitoring system that includes the sensor control unit described above. The analyte monitoring system also includes a sensor that has at least one working electrode and at least one contact pad coupled to the working electrode or electrodes. The analyte monitoring system also includes a display unit that has a receiver for receiving data from the sensor control unit and a display coupled to the receiver for displaying an indication of the level of an analyte. The display unit may optionally include a variety of components, such as, for example, a transmitter, an analyzer, a data storage unit, a watchdog circuit, an input device, a power supply, a clock, a lamp, a pager, a telephone interface, a computer interface, an alarm or alarm system, a radio, and a calibration unit. Further components and options for the display unit are described below. In addition, the analyte monitoring system or a component of the

analyte monitoring system may optionally include a processor capable of determining a drug or treatment protocol and/or a drug delivery system.

Yet another embodiment of the invention is an insertion kit for inserting an electrochemical sensor into a patient. The insertion kit includes an inserter. A portion of the inserter has a sharp, rigid, planer structure adapted to support the sensor during insertion of the electrochemical sensor. The insertion kit also includes an insertion gun having a port configured to accept the electrochemical sensor and the inserter. The insertion gun has a driving mechanism for driving the inserter and electrochemical sensor into the patient, and a retraction mechanism for removing the inserter while leaving the sensor within the patient.

Another embodiment is a method of using an electrochemical sensor. A mounting unit is adhered to the skin of a patient. An insertion gun is aligned with a port on the mounting unit. The electrochemical sensor is disposed within the insertion gun and then the electrochemical sensor is inserted into the skin of the patient using the insertion gun. The insertion gun is removed and a housing of the sensor control unit is mounted on the mounting base. A plurality of conductive contacts disposed on the housing is coupled to a plurality of contact pads disposed on the electrochemical sensor to prepare the sensor for use.

One embodiment of the invention is a method for detecting failures in an implanted analyte-responsive sensor. An analyte-responsive sensor is implanted into a patient. The analyte-responsive sensor includes N working electrodes, where N is an integer and is two or greater, and a common counter electrode. Signals generated at one of the N working electrodes and at the common counter electrode are then obtained and the sensor is determined to have failed if the signal from the common counter electrode is not N times the signal from one of the working electrodes, within a predetermined threshold limit.

Yet another embodiment is a method of calibrating an electrochemical sensor having one or more working electrodes implanted in a patient. A signal is generated from each of the working electrodes. Several conditions are tested to determine if calibration is appropriate. First, the signals from each of the one or more working electrodes should differ by less than a first threshold amount. Second, the signals from each of the one or more working electrodes should be within a predetermined range. And, third, a rate of change of the signals from each of the one or more working electrodes should be less than a second threshold amount. A calibration value is found assaying a calibration sample of a patient's body fluid. The calibration value is then related to at least one of the signals from the one or more working electrodes if the conditions described above are met.

A further embodiment is a method for monitoring a level of an analyte. A sensor is inserted into a skin of a patient and a sensor control unit is attached to the skin of the patient. Two or more conductive contacts on the sensor control unit are coupled to contact pads on the sensor. Then, using the sensor control unit, data is collected regarding a level of an analyte from signals generated by the sensor. The collected data is transmitted to a display unit and an indication of the level of the analyte is displayed on the display unit.

The above summary of the present invention is not intended to describe each disclosed embodiment or every implementation of the present invention. The Figures and the detailed description which follow more particularly exemplify these embodiments.

BRIEF DESCRIPTION OF THE DRAWINGS

The invention may be more completely understood in consideration of the following detailed description of various embodiments of the invention in connection with the accompanying drawings, in which:

FIG. **1** is a block diagram of one embodiment of a subcutaneous analyte monitor using a subcutaneously implantable analyte sensor, according to the invention;

FIG. **2** is a top view of one embodiment of an analyte sensor, according to the invention;

FIG. **3**A is a cross-sectional view of the analyte sensor of FIG. **2**;

FIG. **3**B is a cross-sectional view of another embodiment of an analyte sensor, according to the invention;

FIG. **4**A is a cross-sectional view of a third embodiment of an analyte sensor, according to the invention;

FIG. **4**B is a cross-sectional view of a fourth embodiment of an analyte sensor, according to the invention;

FIG. **5** is an expanded top view of a tip portion of the analyte sensor of FIG. **2**;

FIG. **6** is a cross-sectional view of a fifth embodiment of an analyte sensor, according to the invention;

FIG. **7** is an expanded top view of a tip-portion of the analyte sensor of FIG. **6**;

FIG. **8** is an expanded bottom view of a tip-portion of the analyte sensor of FIG. **6**;

FIG. **9** is a side view of the analyte sensor of FIG. **2**;

FIG. **10** is a top view of the analyte sensor of FIG. **6**;

FIG. **11** is a bottom view of the analyte sensor of FIG. **6**;

FIG. **12** is an expanded side view of one embodiment of a sensor and an insertion device, according to the invention;

FIGS. **13**A, **13**B, **13**C are cross-sectional views of three embodiments of the insertion device of FIG. **12**;

FIG. **14** is a cross-sectional view of one embodiment of an on-skin sensor control unit, according to the invention;

FIG. **15** is a top view of a base of the on-skin sensor control unit of FIG. **14**;

FIG. **16** is a bottom view of a cover of the on-skin sensor control unit of FIG. **14**;

FIG. **17** is a perspective view of the on-skin sensor control unit of FIG. **14** on the skin of a patient;

FIG. **18**A is a block diagram of one embodiment of an on-skin sensor control unit, according to the invention;

FIG. **18**B is a block diagram of another embodiment of an on-skin sensor control unit, according to the invention;

FIGS. **19**A, **19**B, **19**C, and **19**D are cross-sectional views of four embodiments of conductive contacts disposed on an interior surface of a housing of an on-skin sensor control unit, according to the invention;

FIGS. **19**E and **19**F are cross-sectional views of two embodiments of conductive contacts disposed on an exterior surface of a housing of an on-skin sensor control unit, according to the invention;

FIGS. **20**A and **20**B are schematic diagrams of two embodiments of a current-to-voltage converter for use in an analyte monitoring device, according to the invention;

FIG. **21** is a block diagram of one embodiment of an open loop modulation system for use in an analyte monitoring device, according to the invention;

FIG. **22** is a block diagram of one embodiment of a receiver/display unit, according to the invention;

FIG. **23** is a front view of one embodiment of a receiver/display unit;

FIG. **24** is a front view of a second embodiment of a receiver/display unit;

FIG. **25** is a block diagram of one embodiment of a drug delivery system, according to the invention;

FIG. **26** is a perspective view of the internal structure of an insertion gun, according to the invention;

FIG. **27**A is a top view of one embodiment of an on-skin sensor control unit, according to the invention;

FIG. **27**B is a top view of one embodiment of a mounting unit of the on-skin sensor control unit of FIG. **27**A;

FIG. **28**A is a top view of another embodiment of an on-skin sensor control unit after insertion of an insertion device and a sensor, according to the invention;

FIG. **28**B is a top view of one embodiment of a mounting unit of the on-skin sensor control unit of FIG. **28**A;

FIG. **28**C is a top view of one embodiment of a housing for at least a portion of the electronics of the on-skin sensor control unit of FIG. **28**A;

FIG. **28**D is a bottom view of the housing of FIG. **28**C;

FIG. **28**E is a top view of the on-skin sensor control unit of FIG. **28**A with a cover of the housing removed;

FIGS. **29**A-**29**B are exemplary illustrations of the difference in the sensor signals over time for sensors provided with anti-clotting agent compared to sensors without any anti-clotting agent coating;

FIG. **30** illustrates a Clarke Error Grid Analysis for a system in which the calibration is performed after the first hour of sensor placement in a patient;

FIG. **31** illustrates a Clarke Error grid analysis for a system in which the initial calibration is performed after 10 hours after placement of the sensor in a patient;

FIG. **32** shows a comparison between the first hour calibration data of FIG. **30** and the hour calibration data of FIG. **31**;

FIG. **33** illustrates, in tabular form, the overall comparison between the data from the 1 hour calibration of FIG. **30** versus the 10 hour calibration of FIG. **31**;

FIG. **34** illustrates data accuracy from the sensor in the 10 hour calibration embodiment as compared with glucose meter readings obtained using a test strip over a five day period showing the clinically acceptable degree of accuracy data obtained from the 10 hour calibrated sensor;

FIG. **35** provides a tabular illustration of the change in the daily MARD value over a 5 day period;

FIGS. **36**A-**36**D show an embodiment of an integrated auto turn on in vitro monitoring system integrated with an in vivo analyte testing system; and

FIG. **37** is a simplified block diagram of the receiver/display unit **446**/**448** shown in FIGS. **36**A-**36**D in accordance with one aspect of the present disclosure.

While the invention is amenable to various modifications and alternative forms, specifics thereof have been shown by way of example in the drawings and will be described in detail. It should be understood, however, that the intention is not to limit the invention to the particular embodiments described. On the contrary, the intention is to cover all modifications, equivalents, and alternatives falling within the spirit and scope of the invention as defined by the appended claims.

DETAILED DESCRIPTION

The present invention is applicable to an analyte monitoring system using an implantable sensor for the in vivo determination of a concentration of an analyte, such as glucose or lactate, in a fluid. The sensor can be, for example, subcutaneously implanted in a patient for the continuous or periodic monitoring an analyte in a patient's interstitial fluid. This can then be used to infer the glucose level in the patient's bloodstream. Other in vivo analyte sensors can be made, according to the invention, for insertion into a vein, artery, or other portion of the body containing fluid. The analyte monitoring system is typically configured for monitoring the level of the analyte over a time period which may range from days to weeks or longer.

The following definitions are provided for terms used herein:

A "counter electrode" refers to an electrode paired with the working electrode, through which passes a current equal in magnitude and opposite in sign to the current passing through the working electrode. In the context of the invention, the term "counter electrode" is meant to include counter electrodes which also function as reference electrodes (i.e., a counter/reference electrode).

An "electrochemical sensor" is a device configured to detect the presence and/or measure the level of an analyte in a sample via electrochemical oxidation and reduction reactions on the sensor. These reactions are transduced to an electrical signal that can be correlated to an amount, concentration, or level of an analyte in the sample.

"Electrolysis" is the electrooxidation or electroreduction of a compound either directly at an electrode or via one or more electron transfer agents.

A compound is "immobilized" on a surface when it is entrapped on or chemically bound to the surface.

A "non-leachable" or "non-releasable" compound or a compound that is "non-leachably disposed" is meant to define a compound that is affixed on the sensor such that it does not substantially diffuse away from the working surface of the working electrode for the period in which the sensor is used (e.g., the period in which the sensor is implanted in a patient or measuring a sample).

Components are "immobilized" within a sensor, for example, when the components are covalently, ionically, or coordinatively bound to constituents of the sensor and/or are entrapped in a polymeric or sol-gel matrix or membrane which precludes mobility.

An "electron transfer agent" is a compound that carries electrons between the analyte and the working electrode, either directly, or in cooperation with other electron transfer agents. One example of an electron transfer agent is a redox mediator.

A "working electrode" is an electrode at which the analyte (or a second compound whose level depends on the level of the analyte) is electrooxidized or electroreduced with or without the agency of an electron transfer agent.

A "working surface" is that portion of the working electrode which is coated with or is accessible to the electron transfer agent and configured for exposure to an analyte-containing fluid.

A "sensing layer" is a component of the sensor which includes constituents that facilitate the electrolysis of the analyte. The sensing layer may include constituents such as an electron transfer agent, a catalyst which catalyzes a reaction of the analyte to produce a response at the electrode, or both. In some embodiments of the sensor, the sensing layer is non-leachably disposed in proximity to or on the working electrode.

A "non-corroding" conductive material includes non-metallic materials, such as carbon and conductive polymers.

Analyte Sensor Systems

The analyte monitoring systems of the present invention can be utilized under a variety of conditions. The particular configuration of a sensor and other units used in the analyte monitoring system may depend on the use for which the analyte monitoring system is intended and the conditions under which the analyte monitoring system will operate. One

embodiment of the analyte monitoring system includes a sensor configured for implantation into a patient or user. For example, implantation of the sensor may be made in the arterial or venous systems for direct testing of analyte levels in blood. Alternatively, a sensor may be implanted in the interstitial tissue for determining the analyte level in interstitial fluid. This level may be correlated and/or converted to analyte levels in blood or other fluids. The site and depth of implantation may affect the particular shape, components, and configuration of the sensor. Subcutaneous implantation may be preferred, in some cases, to limit the depth of implantation of the sensor. Sensors may also be implanted in other regions of the body to determine analyte levels in other fluids. Examples of suitable sensor for use in the analyte monitoring systems of the invention are described in U.S. patent application Ser. No. 09/034,372 issued as U.S. Pat. No. 6,134,461, incorporated herein by reference.

One embodiment of the analyte monitoring system **40** for use with an implantable sensor **42**, and particularly for use with a subcutaneously implantable sensor, is illustrated in block diagram form in FIG. **1**. The analyte monitoring system **40** includes, at minimum, a sensor **42**, a portion of which is configured for implantation (e.g., subcutaneous, venous, or arterial implantation) into a patient, and a sensor control unit **44**. The sensor **42** is coupled to the sensor control unit **44** which is typically attached to the skin of a patient. The sensor control unit **44** operates the sensor **42**, including, for example, providing a voltage across the electrodes of the sensor **42** and collecting signals from the sensor **42**. The sensor control unit **44** may evaluate the signals from the sensor **42** and/or transmit the signals to one or more optional receiver/display units **46**, **48** for evaluation. The sensor control unit **44** and/or the receiver/display units **46**, **48** may display or otherwise communicate the current level of the analyte. Furthermore, the sensor control unit **44** and/or the receiver/display units **46**, **48** may indicate to the patient, via, for example, an audible, visual, or other sensory-stimulating alarm, when the level of the analyte is at or near a threshold level. In some embodiments, an electrical shock can be delivered to the patient as a warning through one of the electrodes or the optional temperature probe of the sensor. For example, if glucose is monitored then an alarm may be used to alert the patient to a hypoglycemic or hyperglycemic glucose level and/or to impending hypoglycemia or hyperglycemia.

The Sensor

A sensor **42** includes at least one working electrode **58** formed on a substrate **50**, as shown in FIG. **2**. The sensor **42** may also include at least one counter electrode **60** (or counter/reference electrode) and/or at least one reference electrode **62** (see FIG. **8**). The counter electrode **60** and/or reference electrode **62** may be formed on the substrate **50** or may be separate units. For example, the counter electrode and/or reference electrode may be formed on a second substrate which is also implanted in the patient or, for some embodiments of the implantable sensors, the counter electrode and/or reference electrode may be placed on the skin of the patient with the working electrode or electrodes being implanted into the patient. The use of an on-the-skin counter and/or reference electrode with an implantable working electrode is described in U.S. Pat. No. 5,593,852, incorporated herein by reference.

The working electrode or electrodes **58** are formed using conductive traces **52** disposed on the substrate **50**. The counter electrode **60** and/or reference electrode **62** (see FIG. **3**B), as well as other optional portions of the sensor **42**, such as a temperature probe **66** (see FIG. **8**), may also be formed using conductive traces **52** disposed on the substrate **50**. These conductive traces **52** may be formed over a smooth surface of the substrate **50** or within channels **54** (see FIG. **3**A) formed by, for example, embossing, indenting or otherwise creating a depression in the substrate **50**.

A sensing layer **64** (see FIGS. **3**A and **3**B) is often formed proximate to or on at least one of the working electrodes **58** to facilitate the electrochemical detection of the analyte and the determination of its level in the sample fluid, particularly if the analyte cannot be electrolyzed at a desired rate and/or with a desired specificity on a bare electrode. The sensing layer **64** may include an electron transfer agent to transfer electrons directly or indirectly between the analyte and the working electrode **58**. The sensing layer **64** may also contain a catalyst to catalyze a reaction of the analyte. The components of the sensing layer may be in a fluid or gel that is proximate to or in contact with the working electrode **58**. Alternatively, the components of the sensing layer **64** may be disposed in a polymeric or sol-gel matrix that is proximate to or on the working electrode **58**. Preferably, the components of the sensing layer **64** are non-leachably disposed within the sensor **42**. More preferably, the components of the sensor **42** are immobilized within the sensor **42**.

In addition to the electrodes **58**, **60**, **62** and the sensing layer **64**, the sensor **42** may also include a temperature probe **66** (see FIGS. **6** and **8**), a mass transport limiting layer **74** (see FIG. **9**), a biocompatible layer **75** (see FIG. **9**), and/or other optional components, as described below. Each of these items enhances the functioning of and/or results from the sensor **42**, as discussed below.

The Substrate

The substrate **50** may be formed using a variety of non-conducting materials, including, for example, polymeric or plastic materials and ceramic materials. Suitable materials for a particular sensor **42** may be determined, at least in part, based on the desired use of the sensor **42** and properties of the materials.

In some embodiments, the substrate is flexible. For example, if the sensor **42** is configured for implantation into a patient, then the sensor **42** may be made flexible (although rigid sensors may also be used for implantable sensors) to reduce pain to the patient and damage to the tissue caused by the implantation of and/or the wearing of the sensor **42**. A flexible substrate **50** often increases the patient's comfort and allows a wider range of activities. Suitable materials for a flexible substrate **50** include, for example, non-conducting plastic or polymeric materials and other non-conducting, flexible, deformable materials. Examples of useful plastic or polymeric materials include thermoplastics such as polycarbonates, polyesters (e.g., Mylar™ and polyethylene terephthalate (PET)), polyvinyl chloride (PVC), polyurethanes, polyethers, polyamides, polyimides, or copolymers of these thermoplastics, such as PETG (glycol-modified polyethylene terephthalate).

In other embodiments, the sensors **42** are made using a relatively rigid substrate **50** to, for example, provide structural support against bending or breaking Examples of rigid materials that may be used as the substrate **50** include poorly conducting ceramics, such as aluminum oxide and silicon dioxide. One advantage of an implantable sensor **42** having a rigid substrate is that the sensor **42** may have a sharp point and/or a sharp edge to aid in implantation of a sensor **42** without an additional insertion device.

It will be appreciated that for many sensors **42** and sensor applications, both rigid and flexible sensors will operate adequately. The flexibility of the sensor **42** may also be controlled and varied along a continuum by changing, for example, the composition and/or thickness of the substrate **50**.

In addition to considerations regarding flexibility, it is often desirable that implantable sensors **42** should have a substrate **50** which is non-toxic. Preferably, the substrate **50** is approved by one or more appropriate governmental agencies or private groups for in vivo use.

The sensor **42** may include optional features to facilitate insertion of an implantable sensor **42**, as shown in FIG. **12**. For example, the sensor **42** may be pointed at the tip **123** to ease insertion. In addition, the sensor **42** may include a barb **125** which assists in anchoring the sensor **42** within the tissue of the patient during operation of the sensor **42**. However, the barb **125** is typically small enough that little damage is caused to the subcutaneous tissue when the sensor **42** is removed for replacement.

Although the substrate **50** in at least some embodiments has uniform dimensions along the entire length of the sensor **42**, in other embodiments, the substrate **50** has a distal end **67** and a proximal end **65** with different widths **53**, **55**, respectively, as illustrated in FIG. **2**. In these embodiments, the distal end **67** of the substrate **50** may have a relatively narrow width **53**. For sensors **42** which are implantable into the subcutaneous tissue or another portion of a patient's body, the narrow width **53** of the distal end **67** of the substrate **50** may facilitate the implantation of the sensor **42**. Often, the narrower the width of the sensor **42**, the less pain the patient will feel during implantation of the sensor and afterwards.

For subcutaneously implantable sensors **42** which are designed for continuous or periodic monitoring of the analyte during normal activities of the patient, a distal end **67** of the sensor **42** which is to be implanted into the patient has a width **53** of 2 mm or less, preferably 1 mm or less, and more preferably 0.5 mm or less. If the sensor **42** does not have regions of different widths, then the sensor **42** will typically have an overall width of, for example, 2 mm, 1.5 mm, 1 mm, 0.5 mm, 0.25 mm, or less. However, wider or narrower sensors may be used. In particular, wider implantable sensors may be used for insertion into veins or arteries or when the movement of the patient is limited, for example, when the patient is confined in bed or in a hospital.

Returning to FIG. **2**, the proximal end **65** of the sensor **42** may have a width **55** larger than the distal end **67** to facilitate the connection between contact pads **49** of the electrodes and contacts on a control unit. The wider the sensor **42** at this point, the larger the contact pads **49** can be made. This may reduce the precision needed to properly connect the sensor **42** to contacts on the control unit (e.g., sensor control unit **44** of FIG. **1**). However, the maximum width of the sensor **42** may be constrained so that the sensor **42** remains small for the convenience and comfort of the patient and/or to fit the desired size of the analyte monitor. For example, the proximal end **65** of a subcutaneously implantable sensor **42**, such as the sensor **42** illustrated in FIG. **1**, may have a width **55** ranging from 0.5 mm to 15 mm, preferably from 1 mm to 10 mm, and more preferably from 3 mm to 7 mm. However, wider or narrower sensors may be used in this and other in vivo applications.

The thickness of the substrate **50** may be determined by the mechanical properties of the substrate material (e.g., the strength, modulus, and/or flexibility of the material), the desired use of the sensor **42** including stresses on the substrate **50** arising from that use, as well as the depth of any channels or indentations formed in the substrate **50**, as discussed below. Typically, the substrate **50** of a subcutaneously implantable sensor **42** for continuous or periodic monitoring of the level of an analyte while the patient engages in normal activities has a thickness of 50 to 500 μm and preferably 100 to 300 μm. However, thicker and thinner substrates **50** may be used, particularly in other types of in vivo sensors **42**.

The length of the sensor **42** may have a wide range of values depending on a variety of factors. Factors which influence the length of an implantable sensor **42** may include the depth of implantation into the patient and the ability of the patient to manipulate a small flexible sensor **42** and make connections between the sensor **42** and the sensor control unit **44**. A subcutaneously implantable sensor **42** for the analyte monitor illustrated in FIG. **1** may have a length ranging from 0.3 to 5 cm, however, longer or shorter sensors may be used. The length of the narrow portion of the sensor **42** (e.g., the portion which is subcutaneously inserted into the patient), if the sensor **42** has narrow and wide portions, is typically about 0.25 to 2 cm in length. However, longer and shorter portions may be used. All or only a part of this narrow portion may be subcutaneously implanted into the patient. The lengths of other implantable sensors **42** will vary depending, at least in part, on the portion of the patient into which the sensor **42** is to be implanted or inserted.

Conductive Traces

At least one conductive trace **52** is formed on the substrate for use in constructing a working electrode **58**. In addition, other conductive traces **52** may be formed on the substrate **50** for use as electrodes (e.g., additional working electrodes, as well as counter, counter/reference, and/or reference electrodes) and other components, such as a temperature probe. The conductive traces **52** may extend most of the distance along a length **57** of the sensor **50**, as illustrated in FIG. **2**, although this is not necessary. The placement of the conductive traces **52** may depend on the particular configuration of the analyte monitoring system (e.g., the placement of control unit contacts and/or the sample chamber in relation to the sensor **42**). For implantable sensors, particularly subcutaneously implantable sensors, the conductive traces typically extend close to the tip of the sensor **42** to minimize the amount of the sensor that must be implanted.

The conductive traces **52** may be formed on the substrate **50** by a variety of techniques, including, for example, photolithography, screen printing, or other impact or non-impact printing techniques. The conductive traces **52** may also be formed by carbonizing conductive traces **52** in an organic (e.g., polymeric or plastic) substrate **50** using a laser. A description of some exemplary methods for forming the sensor **42** is provided in U.S. patent application Ser. No. 09/034,422, issued as U.S. Pat. No. 6,103,033 incorporated herein by reference.

Another method for disposing the conductive traces **52** on the substrate **50** includes the formation of recessed channels **54** in one or more surfaces of the substrate **50** and the subsequent filling of these recessed channels **54** with a conductive material **56**, as shown in FIG. **3**A. The recessed channels **54** may be formed by indenting, embossing, or otherwise creating a depression in the surface of the substrate **50**. Exemplary methods for forming channels and electrodes in a surface of a substrate can be found in U.S. patent application Ser. No. 09/034,422, issued as U.S. Pat. No. 6,103,033. The depth of the channels is typically related to the thickness of the substrate **50**. In one embodiment, the channels have depths in the range of about 12.5 to 75 μm (0.5 to 3 mils), and preferably about 25 to 50 μm (1 to 2 mils).

The conductive traces are typically formed using a conductive material **56** such as carbon (e.g., graphite), a conductive polymer, a metal or alloy (e.g., gold or gold alloy), or a metallic compound (e.g., ruthenium dioxide or titanium dioxide). The formation of films of carbon, conductive polymer, metal, alloy, or metallic compound are well-known and

include, for example, chemical vapor deposition (CVD), physical vapor deposition, sputtering, reactive sputtering, printing, coating, and painting. The conductive material **56** which fills the channels **54** is often formed using a precursor material, such as a conductive ink or paste. In these embodiments, the conductive material **56** is deposited on the substrate **50** using methods such as coating, painting, or applying the material using a spreading instrument, such as a coating blade. Excess conductive material between the channels **54** is then removed by, for example, running a blade along the substrate surface.

In one embodiment, the conductive material **56** is a part of a precursor material, such as a conductive ink, obtainable, for example, from Ercon, Inc. (Wareham, Mass.), Metech, Inc. (Elverson, Pa.), E.I. du Pont de Nemours and Co. (Wilmington, Del.), Emca-Remex Products (Montgomeryville, Pa.), or MCA Services (Melbourn, Great Britain). The conductive ink is typically applied as a semi-liquid or paste which contains particles of the carbon, metal, alloy, or metallic compound and a solvent or dispersant. After application of the conductive ink on the substrate **50** (e.g., in the channels **54**), the solvent or dispersant evaporates to leave behind a solid mass of conductive material **56**.

In addition to the particles of carbon, metal, alloy, or metallic compound, the conductive ink may also contain a binder. The binder may optionally be cured to further bind the conductive material **56** within the channel **54** and/or on the substrate **50**. Curing the binder increases the conductivity of the conductive material **56**. However, this is typically not necessary as the currents carried by the conductive material **56** within the conductive traces **52** are often relatively low (usually less than 1 μA and often less than 100 nA). Typical binders include, for example, polyurethane resins, cellulose derivatives, elastomers, and highly fluorinated polymers. Examples of elastomers include silicones, polymeric dienes, and acrylonitrile-butadiene-styrene (ABS) resins. One example of a fluorinated polymer binder is Teflon® (DuPont, Wilmington, Del.). These binders are cured using, for example, heat or light, including ultraviolet (UV) light. The appropriate curing method typically depends on the particular binder which is used.

Often, when a liquid or semi-liquid precursor of the conductive material **56** (e.g., a conductive ink) is deposited in the channel **54**, the precursor fills the channel **54**. However, when the solvent or dispersant evaporates, the conductive material **56** which remains may lose volume such that the conductive material **56** may or may not continue to fill the channel **54**. Preferred conductive materials **56** do not pull away from the substrate **50** as they lose volume, but rather decrease in height within the channel **54**. These conductive materials **56** typically adhere well to the substrate **50** and therefore do not pull away from the substrate **50** during evaporation of the solvent or dispersant. Other suitable conductive materials **56** either adhere to at least a portion of the substrate **50** and/or contain another additive, such as a binder, which adheres the conductive material **56** to the substrate **50**. Preferably, the conductive material **56** in the channels **54** is non-leachable, and more preferably immobilized on the substrate **50**. In some embodiments, the conductive material **56** may be formed by multiple applications of a liquid or semi-liquid precursor interspersed with removal of the solvent or dispersant.

In another embodiment, the channels **54** are formed using a laser. The laser carbonizes the polymer or plastic material. The carbon formed in this process is used as the conductive material **56**. Additional conductive material **56**, such as a conductive carbon ink, may be used to supplement the carbon formed by the laser.

In a further embodiment, the conductive traces **52** are formed by pad printing techniques. For example, a film of conductive material is formed either as a continuous film or as a coating layer deposited on a carrier film. This film of conductive material is brought between a print head and the substrate **50**. A pattern on the surface of the substrate **50** is made using the print head according to a desired pattern of conductive traces **52**. The conductive material is transferred by pressure and/or heat from the film of conductive material to the substrate **50**. This technique often produces channels (e.g., depressions caused by the print head) in the substrate **50**. Alternatively, the conductive material is deposited on the surface of the substrate **50** without forming substantial depressions.

In other embodiments, the conductive traces **52** are formed by non-impact printing techniques. Such techniques include electrophotography and magnetography. In these processes, an image of the conductive traces **52** is electrically or magnetically formed on a drum. A laser or LED may be used to electrically form an image. A magnetic recording head may be used to magnetically form an image. A toner material (e.g., a conductive material, such as a conductive ink) is then attracted to portions of the drum according to the image. The toner material is then applied to the substrate by contact between the drum and the substrate. For example, the substrate may be rolled over the drum. The toner material may then be dried and/or a binder in the toner material may be cured to adhere the toner material to the substrate.

Another non-impact printing technique includes ejecting droplets of conductive material onto the substrate in a desired pattern. Examples of this technique include ink jet printing and piezo jet printing. An image is sent to the printer which then ejects the conductive material (e.g., a conductive ink) according to the pattern. The printer may provide a continuous stream of conductive material or the printer may eject the conductive material in discrete amounts at the desired points.

Yet another non-impact printing embodiment of forming the conductive traces includes an ionographic process. In the this process, a curable, liquid precursor, such as a photopolymerizable acrylic resin (e.g., Solimer 7501 from Cubital, Bad Kreuznach, Germany) is deposited over a surface of a substrate **50**. A photomask having a positive or negative image of the conductive traces **52** is then used to cure the liquid precursor. Light (e.g., visible or ultraviolet light) is directed through the photomask to cure the liquid precursor and form a solid layer over the substrate according to the image on the photomask. Uncured liquid precursor is removed leaving behind channels **54** in the solid layer. These channels **54** can then be filled with conductive material **56** to form conductive traces **52**.

Conductive traces **52** (and channels **54**, if used) can be formed with relatively narrow widths, for example, in the range of 25 to 250 μm, and including widths of, for example, 250 μm, 150 μm, 100 μm, 75 μm, 50 μm, 25 μm or less by the methods described above. In embodiments with two or more conductive traces **52** on the same side of the substrate **50**, the conductive traces **52** are separated by distances sufficient to prevent conduction between the conductive traces **52**. The edge-to-edge distance between the conductive traces is preferably in the range of 25 to 250 μm and may be, for example, 150 μm, 100 μm, 75 μm, 50 μm, or less. The density of the conductive traces **52** on the substrate **50** is preferably in the range of about 150 to 700 μm/trace and may be as small as 667 μm/trace or less, 333 μm/trace or less, or even 167 μm/trace or less.

The working electrode **58** and the counter electrode **60** (if a separate reference electrode is used) are often made using a

conductive material **56**, such as carbon. Suitable carbon conductive inks are available from Ercon, Inc. (Wareham, Mass.), Metech, Inc. (Elverson, Pa.), E.I. du Pont de Nemours and Co. (Wilmington, Del.), Emca-Remex Products (Montgomeryville, Pa.), or MCA Services (Melbourn, Great Britain). Typically, the working surface **51** of the working electrode **58** is at least a portion of the conductive trace **52** that is in contact with the analyte-containing fluid (e.g., implanted in the patient).

The reference electrode **62** and/or counter/reference electrode are typically formed using conductive material **56** that is a suitable reference material, for example silver/silver chloride or a non-leachable redox couple bound to a conductive material, for example, a carbon-bound redox couple. Suitable silver/silver chloride conductive inks are available from Ercon, Inc. (Wareham, Mass.), Metech, Inc. (Elverson, Pa.), E.I. du Pont de Nemours and Co. (Wilmington, Del.), Emca-Remex Products (Montgomeryville, Pa.), or MCA Services (Melbourn, Great Britain). Silver/silver chloride electrodes illustrate a type of reference electrode that involves the reaction of a metal electrode with a constituent of the sample or body fluid, in this case, Cl—.

Suitable redox couples for binding to the conductive material of the reference electrode include, for example, redox polymers (e.g., polymers having multiple redox centers.) It is preferred that the reference electrode surface be non-corroding so that an erroneous potential is not measured. Preferred conductive materials include less corrosive metals, such as gold and palladium. Most preferred are non-corrosive materials including non-metallic conductors, such as carbon and conducting polymers. A redox polymer can be adsorbed on or covalently bound to the conductive material of the reference electrode, such as a carbon surface of a conductive trace **52**. Non-polymeric redox couples can be similarly bound to carbon or gold surfaces.

A variety of methods may be used to immobilize a redox polymer on an electrode surface. One method is adsorptive immobilization. This method is particularly useful for redox polymers with relatively high molecular weights. The molecular weight of a polymer may be increased, for example, by cross-linking.

Another method for immobilizing the redox polymer includes the functionalization of the electrode surface and then the chemical bonding, often covalently, of the redox polymer to the functional groups on the electrode surface. One example of this type of immobilization begins with a poly(4-vinylpyridine). The polymer's pyridine rings are, in part, complexed with a reducible/oxidizable species, such as [Os(bpy)2 Cl]+/2+ where bpy is 2,2'-bipyridine. Part of the pyridine rings are quaternized by reaction with 2-bromoethylamine. The polymer is then crosslinked, for example, using a diepoxide, such as polyethylene glycol diglycidyl ether.

Carbon surfaces can be modified for attachment of a redox species or polymer, for example, by electroreduction of a diazonium salt. As an illustration, reduction of a diazonium salt formed upon diazotization of p-aminobenzoic acid modifies a carbon surface with phenylcarboxylic acid functional groups. These functional groups can then be activated by a carbodiimide, such as 1-ethyl-3-(3-dimethylaminopropyl)-carbodiimide hydrochloride. The activated functional groups are then bound with an amine-functionalized redox couple, such as the quaternized osmium-containing redox polymer described above or 2-aminoethylferrocene, to form the redox couple.

Similarly, gold can be functionalized by an amine, such as cystamine. A redox couple such as [Os(bpy)2(pyridine-4-carboxylate)Cl]0/+ is activated by 1-ethyl-3-(3-dimethylaminopropyl)-carbodiimide hydrochloride to form a reactive O-acylisourea which reacts with the gold-bound amine to form an amide.

In one embodiment, in addition to using the conductive traces **52** as electrodes or probe leads, two or more of the conductive traces **52** on the substrate **50** are used to give the patient a mild electrical shock when, for example, the analyte level exceeds a threshold level. This shock may act as a warning or alarm to the patient to initiate some action to restore the appropriate level of the analyte.

The mild electrical shock is produced by applying a potential between any two conductive traces **52** that are not otherwise connected by a conductive path. For example, two of the electrodes **58**, **60**, **62** or one electrode **58**, **60**, **62** and the temperature probe **66** may be used to provide the mild shock. Preferably, the working electrode **58** and the reference electrode **62** are not used for this purpose as this may cause some damage to the chemical components on or proximate to the particular electrode (e.g., the sensing layer on the working electrode or the redox couple on the reference electrode).

The current used to produce the mild shock is typically 0.1 to 1 mA. Higher or lower currents may be used, although care should be taken to avoid harm to the patient. The potential between the conductive traces is typically 1 to 10 volts. However, higher or lower voltages may be used depending, for example, on the resistance of the conductive traces **52**, the distance between the conductive traces **52** and the desired amount of current. When the mild shock is delivered, potentials at the working electrode **58** and across the temperature probe **66** may be removed to prevent harm to those components caused by unwanted conduction between the working electrode **58** (and/or temperature probe **66**, if used) and the conductive traces **52** which provide the mild shock.

Contact Pads

Typically, each of the conductive traces **52** includes a contact pad **49**. The contact pad **49** may simply be a portion of the conductive trace **52** that is indistinguishable from the rest of the trace **52** except that the contact pad **49** is brought into contact with the conductive contacts of a control unit (e.g., the sensor control unit **44** of FIG. **1**). More commonly, however, the contact pad **49** is a region of the conductive trace **52** that has a larger width than other regions of the trace **52** to facilitate a connection with the contacts on the control unit. By making the contact pads **49** relatively large as compared with the width of the conductive traces **52**, the need for precise registration between the contact pads **49** and the contacts on the control unit is less critical than with small contact pads.

The contact pads **49** are typically made using the same material as the conductive material **56** of the conductive traces **52**. However, this is not necessary. Although metal, alloys, and metallic compounds may be used to form the contact pads **49**, in some embodiments, it is desirable to make the contact pads **49** from a carbon or other non-metallic material, such as a conducting polymer. In contrast to metal or alloy contact pads, carbon and other non-metallic contact pads are not easily corroded if the contact pads **49** are in a wet, moist, or humid environment. Metals and alloys may corrode under these conditions, particularly if the contact pads **49** and contacts of the control unit are made using different metals or alloys. However, carbon and non-metallic contact pads **49** do not significantly corrode, even if the contacts of the control device are metal or alloy.

One embodiment of the invention includes a sensor **42** having contact pads **49** and a control unit **44** having conductive contacts (not shown). During operation of the sensor **42**, the contact pads **49** and conductive contacts are in contact with each other. In this embodiment, either the contact pads

49 or the conductive contacts are made using a non-corroding, conductive material. Such materials include, for example, carbon and conducting polymers. Preferred non-corroding materials include graphite and vitreous carbon. The opposing contact pad or conductive contact is made using carbon, a conducting polymer, a metal, such as gold, palladium, or platinum group metal, or a metallic compound, such as ruthenium dioxide. This configuration of contact pads and conductive contacts typically reduces corrosion. Preferably, when the sensor is placed in a 3 mM, and more preferably, in a 100 mM, NaCl solution, the signal arising due to the corrosion of the contact pads and/or conductive contacts is less than 3% of the signal generated by the sensor when exposed to concentration of analyte in the normal physiological range. For at least some subcutaneous glucose sensors, the current generated by analyte in a normal physiological range ranges from 3 to 500 nA.

Each of the electrodes **58**, **60**, **62**, as well as the two probe leads **68**, **70** of the temperature probe **66** (described below), are connected to contact pads **49** as shown in FIGS. **10** and **11**. In one embodiment (not shown), the contact pads **49** are on the same side of the substrate **50** as the respective electrodes or temperature probe leads to which the contact pads **49** are attached.

In other embodiments, the conductive traces **52** on at least one side are connected through vias in the substrate to contact pads **49***a* on the opposite surface of the substrate **50**, as shown in FIGS. **10** and **11**. An advantage of this configuration is that contact between the contacts on the control unit and each of the electrodes **58**, **60**, **62** and the probe leads **68**, **70** of the temperature probe **66** can be made from a single side of the substrate **50**.

In yet other embodiments (not shown), vias through the substrate are used to provide contact pads on both sides of the substrate **50** for each conductive trace **52**. The vias connecting the conductive traces **52** with the contact pads **49***a* can be formed by making holes through the substrate **50** at the appropriate points and then filling the holes with conductive material **56**.

Exemplary Electrode Configurations

A number of exemplary electrode configurations are described below, however, it will be understood that other configurations may also be used. In one embodiment, illustrated in FIG. **3**A, the sensor **42** includes two working electrodes **58***a*, **58***b* and one counter electrode **60**, which also functions as a reference electrode. In another embodiment, the sensor includes one working electrode **58***a*, one counter electrode **60**, and one reference electrode **62**, as shown in FIG. **3**B. Each of these embodiments is illustrated with all of the electrodes formed on the same side of the substrate **50**.

Alternatively, one or more of the electrodes may be formed on an opposing side of the substrate **50**. This may be convenient if the electrodes are formed using two different types of conductive material **56** (e.g., carbon and silver/silver chloride). Then, at least in some embodiments, only one type of conductive material **56** needs to be applied to each side of the substrate **50**, thereby reducing the number of steps in the manufacturing process and/or easing the registration constraints in the process. For example, if the working electrode **58** is formed using a carbon-based conductive material **56** and the reference or counter/reference electrode is formed using a silver/silver chloride conductive material **56**, then the working electrode and reference or counter/reference electrode may be formed on opposing sides of the substrate **50** for case of manufacture.

In another embodiment, two working electrodes **58** and one counter electrode **60** are formed on one side of the substrate **50** and one reference electrode **62** and two temperature probes **66** are formed on an opposing side of the substrate **50**, as illustrated in FIG. **6**. The opposing sides of the tip of this embodiment of the sensor **42** are illustrated in FIGS. **7** and **8**.

Sensing Layer

Some analytes, such as oxygen, can be directly electrooxidized or electroreduced on the working electrode **58**. Other analytes, such as glucose and lactate, require the presence of at least one electron transfer agent and/or at least one catalyst to facilitate the electrooxidation or electroreduction of the analyte. Catalysts may also be used for those analytes, such as oxygen, that can be directly electrooxidized or electroreduced on the working electrode **58**. For these analytes, each working electrode **58** has a sensing layer **64** formed proximate to or on a working surface of the working electrode **58**. Typically, the sensing layer **64** is formed near or on only a small portion of the working electrode **58**, often near a tip of the sensor **42**. This limits the amount of material needed to form the sensor **42** and places the sensing layer **64** in the best position for contact with the analyte-containing fluid (e.g., a body fluid, sample fluid, or carrier fluid).

The sensing layer **64** includes one or more components designed to facilitate the electrolysis of the analyte. The sensing layer **64** may include, for example, a catalyst to catalyze a reaction of the analyte and produce a response at the working electrode **58**, an electron transfer agent to indirectly or directly transfer electrons between the analyte and the working electrode **58**, or both.

The sensing layer **64** may be formed as a solid composition of the desired components (e.g., an electron transfer agent and/or a catalyst). These components are preferably non-leachable from the sensor **42** and more preferably are immobilized on the sensor **42**. For example, the components may be immobilized on a working electrode **58**. Alternatively, the components of the sensing layer **64** may be immobilized within or between one or more membranes or films disposed over the working electrode **58** or the components may be immobilized in a polymeric or sol-gel matrix. Examples of immobilized sensing layers are described in U.S. Pat. Nos. 5,262,035, 5,264,104, 5,264,105, 5,320,725, 5,593,852, and 5,665,222, U.S. patent application Ser. No. 08/540,789, now U.S. Pat. No. 5,665,222, and PCT Patent Application No. US1998/002403 entitled"Electrochemical Analyte Sensors Using Thermostable Soybean Peroxidase", filed on Feb. 11, 1998, published as WO-1998/035053, incorporated herein by reference.

In some embodiments, one or more of the components of the sensing layer **64** may be solvated, dispersed, or suspended in a fluid within the sensing layer **64**, instead of forming a solid composition. The fluid may be provided with the sensor **42** or may be absorbed by the sensor **42** from the analyte-containing fluid. Preferably, the components which are solvated, dispersed, or suspended in this type of sensing layer **64** are non-leachable from the sensing layer. Non-leachability may be accomplished, for example, by providing barriers (e.g., the electrode, substrate, membranes, and/or films) around the sensing layer which prevent the leaching of the components of the sensing layer **64**. One example of such a barrier is a microporous membrane or film which allows diffusion of the analyte into the sensing layer **64** to make contact with the components of the sensing layer **64**, but reduces or eliminates the diffusion of the sensing layer components (e.g., an electron transfer agent and/or a catalyst) out of the sensing layer **64**.

A variety of different sensing layer configurations can be used. In one embodiment, the sensing layer **64** is deposited on the conductive material **56** of a working electrode **58***a*, as

illustrated in FIGS. **3**A and **3**B. The sensing layer **64** may extend beyond the conductive material **56** of the working electrode **58***a*. In some cases, the sensing layer **64** may also extend over the counter electrode **60** or reference electrode **62** without degrading the performance of the glucose sensor. For those sensors **42** which utilize channels **54** within which the conductive material **56** is deposited, a portion of the sensing layer **64** may be formed within the channel **54** if the conductive material **56** does not fill the channel **54**.

A sensing layer **64** in direct contact with the working electrode **58***a* may contain an electron transfer agent to transfer electrons directly or indirectly between the analyte and the working electrode, as well as a catalyst to facilitate a reaction of the analyte. For example, a glucose, lactate, or oxygen electrode may be formed having a sensing layer which contains a catalyst, such as glucose oxidase, lactate oxidase, or laccase, respectively, and an electron transfer agent that facilitates the electrooxidation of the glucose, lactate, or oxygen, respectively.

In another embodiment, the sensing layer **64** is not deposited directly on the working electrode **58***a*. Instead, the sensing layer **64** is spaced apart from the working electrode **58***a*, as illustrated in FIG. **4**A, and separated from the working electrode **58***a* by a separation layer **61**. The separation layer **61** typically includes one or more membranes or films. In addition to separating the working electrode **58***a* from the sensing layer **64**, the separation layer **61** may also act as a mass transport limiting layer or an interferent eliminating layer, as described below.

Typically, a sensing layer **64**, which is not in direct contact with the working electrode **58***a*, includes a catalyst that facilitates a reaction of the analyte. However, this sensing layer **64** typically does not include an electron transfer agent that transfers electrons directly from the working electrode **58***a* to the analyte, as the sensing layer **64** is spaced apart from the working electrode **58***a*. One example of this type of sensor is a glucose or lactate sensor which includes an enzyme (e.g., glucose oxidase or lactate oxidase, respectively) in the sensing layer **64**. The glucose or lactate reacts with a second compound (e.g., oxygen) in the presence of the enzyme. The second compound is then electrooxidized or electroreduced at the electrode. Changes in the signal at the electrode indicate changes in the level of the second compound in the fluid and are proportional to changes in glucose or lactate level and, thus, correlate to the analyte level.

In another embodiment, two sensing layers **63**, **64** are used, as shown in FIG. **4**B. Each of the two sensing layers **63**, **64** may be independently formed on the working electrode **58***a* or in proximity to the working electrode **58***a*. One sensing layer **64** is typically, although not necessarily, spaced apart from the working electrode **58***a*. For example, this sensing layer **64** may include a catalyst which catalyzes a reaction of the analyte to form a product compound. The product compound is then electrolyzed in the second sensing layer **63** which may include an electron transfer agent to transfer electrons between the working electrode **58***a* and the product compound and/or a second catalyst to catalyze a reaction of the product compound to generate a signal at the working electrode **58***a*.

For example, a glucose or lactate sensor may include a first sensing layer **64** which is spaced apart from the working electrode and contains an enzyme, for example, glucose oxidase or lactate oxidase. The reaction of glucose or lactate in the presence of the appropriate enzyme forms hydrogen peroxide. A second sensing layer **63** is provided directly on the working electrode **58***a* and contains a peroxidase enzyme and an electron transfer agent to generate a signal at the electrode in response to the hydrogen peroxide. The level of hydrogen peroxide indicated by the sensor then correlates to the level of glucose or lactate. Another sensor which operates similarly can be made using a single sensing layer with both the glucose or lactate oxidase and the peroxidase being deposited in the single sensing layer. Examples of such sensors are described in U.S. Pat. No. 5,593,852, U.S. patent application Ser. No. 08/540,789 issued as U.S. Pat. No. 5,665,222, and PCT Patent Application No. US1998/002403 entitled "Electrochemical Analyte Sensors Using Thermostable Soybean Peroxidase", filed on Feb. 11, 1998, published as WO-1998/035053, incorporated herein by reference.

In some embodiments, one or more of the working electrodes **58***b* do not have a corresponding sensing layer **64**, as shown in FIGS. **3**A and **4**A, or have a sensing layer (not shown) which does not contain one or more components (e.g., an electron transfer agent or catalyst) needed to electrolyze the analyte. The signal generated at this working electrode **58***b* typically arises from interferents and other sources, such as ions, in the fluid, and not in response to the analyte (because the analyte is not electrooxidized or electroreduced). Thus, the signal at this working electrode **58***b* corresponds to a background signal. The background signal can be removed from the analyte signal obtained from other working electrodes **58***a* that are associated with fully-functional sensing layers **64** by, for example, subtracting the signal at working electrode **58***b* from the signal at working electrode **58***a*.

Sensors having multiple working electrodes **58***a* may also be used to obtain more precise results by averaging the signals or measurements generated at these working electrodes **58***a*. In addition, multiple readings at a single working electrode **58***a* or at multiple working electrodes may be averaged to obtain more precise data.

Electron Transfer Agent

In many embodiments, the sensing layer **64** contains one or more electron transfer agents in contact with the conductive material **56** of the working electrode **58**, as shown in FIGS. **3**A and **3**B. In some embodiments of the invention, there is little or no leaching of the electron transfer agent away from the working electrode **58** during the period in which the sensor **42** is implanted in the patient. A diffusing or leachable (i.e., releasable) electron transfer agent often diffuses into the analyte-containing fluid, thereby reducing the effectiveness of the electrode by reducing the sensitivity of the sensor over time. In addition, a diffusing or leaching electron transfer agent in an implantable sensor **42** may also cause damage to the patient. In these embodiments, preferably, at least 90%, more preferably, at least 95%, and, most preferably, at least 99%, of the electron transfer agent remains disposed on the sensor after immersion in the analyte-containing fluid for 24 hours, and, more preferably, for 72 hours. In particular, for an implantable sensor, preferably, at least 90%, more preferably, at least 95%, and most preferably, at least 99%, of the electron transfer agent remains disposed on the sensor after immersion in the body fluid at 37° C. for 24 hours, and, more preferably, for 72 hours.

In some embodiments of the invention, to prevent leaching, the electron transfer agents are bound or otherwise immobilized on the working electrode **58** or between or within one or more membranes or films disposed over the working electrode **58**. The electron transfer agent may be immobilized on the working electrode **58** using, for example, a polymeric or sol-gel immobilization technique. Alternatively, the electron transfer agent may be chemically (e.g., ionically, covalently, or coordinatively) bound to the working electrode **58**, either directly or indirectly through another molecule, such as a polymer, that is in turn bound to the working electrode **58**.

Application of the sensing layer **64** on a working electrode **58***a* is one method for creating a working surface for the working electrode **58***a*, as shown in FIGS. **3**A and **3**B. The electron transfer agent mediates the transfer of electrons to electrooxidize or electroreduce an analyte and thereby permits a current flow between the working electrode **58** and the counter electrode **60** via the analyte. The mediation of the electron transfer agent facilitates the electrochemical analysis of analytes which are not suited for direct electrochemical reaction on an electrode.

In general, the preferred electron transfer agents are electroreducible and electrooxidizable ions or molecules having redox potentials that are a few hundred millivolts above or below the redox potential of the standard calomel electrode (SCE). Preferably, the electron transfer agents are not more reducing than about −150 mV and not more oxidizing than about +400 mV versus SCE.

The electron transfer agent may be organic, organometallic, or inorganic. Examples of organic redox species are quinones and species that in their oxidized state have quinoid structures, such as Nile blue and indophenol. Some quinones and partially oxidized quinhydrones react with functional groups of proteins such as the thiol groups of cysteine, the amine groups of lysine and arginine, and the phenolic groups of tyrosine which may render those redox species unsuitable for some of the sensors of the present invention because of the presence of the interfering proteins in an analyte-containing fluid. Usually substituted quinones and molecules with quinoid structure are less reactive with proteins and are preferred. A preferred tetrasubstituted quinone usually has carbon atoms in positions 1, 2, 3, and 4.

In general, electron transfer agents suitable for use in the invention have structures or charges which prevent or substantially reduce the diffusional loss of the electron transfer agent during the period of time that the sample is being analyzed. The preferred electron transfer agents include a redox species bound to a polymer which can in turn be immobilized on the working electrode. The bond between the redox species and the polymer may be covalent, coordinative, or ionic. Useful electron transfer agents and methods for producing them are described in U.S. Pat. Nos. 5,264,104; 5,356,786; 5,262,035; and 5,320,725, incorporated herein by reference. Although any organic or organometallic redox species can be bound to a polymer and used as an electron transfer agent, the preferred redox species is a transition metal compound or complex. The preferred transition metal compounds or complexes include osmium, ruthenium, iron, and cobalt compounds or complexes. The most preferred are osmium compounds and complexes. It will be recognized that many of the redox species described below may also be used, typically without a polymeric component, as electron transfer agents in a carrier fluid or in a sensing layer of a sensor where leaching of the electron transfer agent is acceptable.

One type of non-releasable polymeric electron transfer agent contains a redox species covalently bound in a polymeric composition. An example of this type of mediator is poly(vinylferrocene).

Another type of non-releasable electron transfer agent contains an ionically-bound redox species. Typically, this type of mediator includes a charged polymer coupled to an oppositely charged redox species. Examples of this type of mediator include a negatively charged polymer such as Nafion® (DuPont) coupled to a positively charged redox species such as an osmium or ruthenium polypyridyl cation. Another example of an ionically-bound mediator is a positively charged polymer such as quaternized poly(4-vinyl pyridine) or poly(1-vinyl imidazole) coupled to a negatively charged redox species such as ferricyanide or ferrocyanide. The preferred ionically-bound redox species is a highly charged redox species bound within an oppositely charged redox polymer.

In another embodiment of the invention, suitable non-releasable electron transfer agents include a redox species coordinatively bound to a polymer. For example, the mediator may be formed by coordination of an osmium or cobalt 2,2'-bipyridyl complex to poly(1-vinyl imidazole) or poly(4-vinyl pyridine).

The preferred electron transfer agents are osmium transition metal complexes with one or more ligands, each ligand having a nitrogen-containing heterocycle such as 2,2'-bipyridine, 1,10-phenanthroline, or derivatives thereof. Furthermore, the preferred electron transfer agents also have one or more ligands covalently bound in a polymer, each ligand having at least one nitrogen-containing heterocycle, such as pyridine, imidazole, or derivatives thereof. These preferred electron transfer agents exchange electrons rapidly between each other and the working electrodes **58** so that the complex can be rapidly oxidized and reduced.

One example of a particularly useful electron transfer agent includes (a) a polymer or copolymer having pyridine or imidazole functional groups and (b) osmium cations complexed with two ligands, each ligand containing 2,2'-bipyridine, 1,10-phenanthroline, or derivatives thereof, the two ligands not necessarily being the same. Preferred derivatives of 2,2'-bipyridine for complexation with the osmium cation are 4,4'-dimethyl-2,2'-bipyridine and mono-, di-, and polyalkoxy-2,2'-bipyridines, such as 4,4'-dimethoxy-2,2'-bipyridine. Preferred derivatives of 1,10-phenanthroline for complexation with the osmium cation are 4,7-dimethyl-1,10-phenanthroline and mono, di-, and polyalkoxy-1,10-phenanthrolines, such as 4,7-dimethoxy-1,10-phenanthroline. Preferred polymers for complexation with the osmium cation include polymers and copolymers of poly(1-vinyl imidazole) (referred to as "PVI") and poly(4-vinyl pyridine) (referred to as "PVP"). Suitable copolymer substituents of poly(1-vinyl imidazole) include acrylonitrile, acrylamide, and substituted or quaternized N-vinyl imidazole. Most preferred are electron transfer agents with osmium complexed to a polymer or copolymer of poly(1-vinyl imidazole).

The preferred electron transfer agents have a redox potential ranging from −100 mV to about +150 mV versus the standard calomel electrode (SCE). Preferably, the potential of the electron transfer agent ranges from −100 mV to +150 mV and more preferably, the potential ranges from −50 mV to +50 mV. The most preferred electron transfer agents have osmium redox centers and a redox potential ranging from +50 mV to −150 mV versus SCE.

Catalyst

The sensing layer **64** may also include a catalyst which is capable of catalyzing a reaction of the analyte. The catalyst may also, in some embodiments, act as an electron transfer agent. One example of a suitable catalyst is an enzyme which catalyzes a reaction of the analyte. For example, a catalyst, such as a glucose oxidase, glucose dehydrogenase (e.g., pyrroloquinoline quinone glucose dehydrogenase (PQQ)), or oligosaccharide dehydrogenase, may be used when the analyte is glucose. A lactate oxidase or lactate dehydrogenase may be used when the analyte is lactate. Laccase may be used when the analyte is oxygen or when oxygen is generated or consumed in response to a reaction of the analyte.

Preferably, the catalyst is non-leachably disposed on the sensor, whether the catalyst is part of a solid sensing layer in the sensor or solvated in a fluid within the sensing layer. More

preferably, the catalyst is immobilized within the sensor (e.g., on the electrode and/or within or between a membrane or film) to prevent unwanted leaching of the catalyst away from the working electrode **58** and into the patient. This may be accomplished, for example, by attaching the catalyst to a polymer, cross linking the catalyst with another electron transfer agent (which, as described above, can be polymeric), and/or providing one or more barrier membranes or films with pore sizes smaller than the catalyst.

As described above, a second catalyst may also be used. This second catalyst is often used to catalyze a reaction of a product compound resulting from the catalyzed reaction of the analyte. The second catalyst typically operates with an electron transfer agent to electrolyze the product compound to generate a signal at the working electrode. Alternatively, the second catalyst may be provided in an interferent-eliminating layer to catalyze reactions that remove interferents, as described below.

One embodiment of the invention is an electrochemical sensor in which the catalyst is mixed or dispersed in the conductive material **56** which forms the conductive trace **52** of a working electrode **58**. This may be accomplished, for example, by mixing a catalyst, such as an enzyme, in a carbon ink and applying the mixture into a channel **54** on the surface of the substrate **50**. Preferably, the catalyst is immobilized in the channel **53** so that it cannot leach away from the working electrode **58**. This may be accomplished, for example, by curing a binder in the carbon ink using a curing technique appropriate to the binder. Curing techniques include, for example, evaporation of a solvent or dispersant, exposure to ultraviolet light, or exposure to heat. Typically, the mixture is applied under conditions that do not substantially degrade the catalyst. For example, the catalyst may be an enzyme that is heat-sensitive. The enzyme and conductive material mixture should be applied and cured, preferably, without sustained periods of heating. The mixture may be cured using evaporation or UV curing techniques or by the exposure to heat that is sufficiently short that the catalyst is not substantially degraded.

Another consideration for in vivo analyte sensors is the thermostability of the catalyst. Many enzymes have only limited stability at biological temperatures. Thus, it may be necessary to use large amounts of the catalyst and/or use a catalyst that is thermostable at the necessary temperature (e.g., 37° C. or higher for normal body temperature). A thermostable catalyst may be defined as a catalyst which loses less than 5% of its activity when held at 37° C. for at least one hour, preferably, at least one day, and more preferably at least three days. One example of a thermostable catalyst is soybean peroxidase. This particular thermostable catalyst may be used in a glucose or lactate sensor when combined either in the same or separate sensing layers with glucose or lactate oxidase or dehydrogenase. A further description of thermostable catalysts and their use in electrochemical inventions is found in U.S. Pat. No. 5,665,222, and PCT Application No. US1998/002403 entitled "Electrochemical Analyte Sensors Using Thermostable Soybean Peroxidase", filed on Feb. 11, 1998, published as WO-1998/035053.

Electrolysis of the Analyte

To electrolyze the analyte, a potential (versus a reference potential) is applied across the working and counter electrodes **58**, **60**. The minimum magnitude of the applied potential is often dependent on the particular electron transfer agent, analyte (if the analyte is directly electrolyzed at the electrode), or second compound (if a second compound, such as oxygen or hydrogen peroxide, whose level is dependent on the analyte level, is directly electrolyzed at the electrode). The applied potential usually equals or is more oxidizing or reducing, depending on the desired electrochemical reaction, than the redox potential of the electron transfer agent, analyte, or second compound, whichever is directly electrolyzed at the electrode. The potential at the working electrode is typically large enough to drive the electrochemical reaction to or near completion.

The magnitude of the potential may optionally be limited to prevent significant (as determined by the current generated in response to the analyte) electrochemical reaction of interferents, such as urate, ascorbate, and acetaminophen. The limitation of the potential may be obviated if these interferents have been removed in another way, such as by providing an interferent-limiting barrier, as described below, or by including a working electrode **58*b*** (see FIG. **3**A) from which a background signal may be obtained.

When a potential is applied between the working electrode **58** and the counter electrode **60**, an electrical current will flow. The current is a result of the electrolysis of the analyte or a second compound whose level is affected by the analyte. In one embodiment, the electrochemical reaction occurs via an electron transfer agent and the optional catalyst. Many analytes B are oxidized (or reduced) to products C by an electron transfer agent species A in the presence of an appropriate catalyst (e.g., an enzyme). The electron transfer agent A is then oxidized (or reduced) at the electrode. Electrons are collected by (or removed from) the electrode and the resulting current is measured. This process is illustrated by reaction equations (1) and (2) (similar equations may be written for the reduction of the analyte B by a redox mediator A in the presence of a catalyst):

$$\mathrm{nA(ox)} + \mathrm{B} \xrightarrow{\text{catalyst}} \mathrm{nA(red)} + \mathrm{C} \tag{1}$$

$$\mathrm{nA(red)} + \mathrm{B} \xrightarrow{\text{electrode}} \mathrm{nA(ox)} + \mathrm{ne^-} \tag{2}$$

As an example, an electrochemical sensor may be based on the reaction of a glucose molecule with two non-leachable ferricyanide anions in the presence of glucose oxidase to produce two non-leachable ferrocyanide anions, two hydrogen ions, and gluconolactone. The amount of glucose present is assayed by electrooxidizing the non-leachable ferrocyanide anions to non-leachable ferricyanide anions and measuring the current.

In another embodiment, a second compound, whose level is affected by the analyte is electrolyzed at the working electrode. In some cases, the analyte D and the second compound, in this case, a reactant compound E, such as oxygen, react in the presence of the catalyst, as shown in reaction equation (3).

$$\mathrm{D} + \mathrm{E} \xrightarrow{\text{catalyst}} \mathrm{F} + \mathrm{G} \tag{3}$$

The reactant compound E is then directly oxidized (or reduced) at the working electrode, as shown in reaction equation (4)

$$\mathrm{nE(red)} \xrightarrow{\text{electrode}} \mathrm{nE(ox)} + \mathrm{ne^-} \tag{4}$$

Alternatively, the reactant compound E is indirectly oxidized (or reduced) using an electron transfer agent H (optionally in the presence of a catalyst), that is subsequently reduced or oxidized at the electrode, as shown in reaction equations (5) and (6).

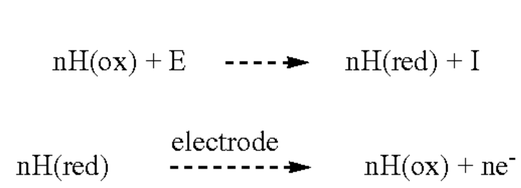

$$nH(ox) + E \dashrightarrow nH(red) + I \quad (5)$$

$$nH(red) \xrightarrow{\text{electrode}} nH(ox) + ne^- \quad (6)$$

In either case, changes in the concentration of the reactant compound, as indicated by the signal at the working electrode, correspond inversely to changes in the analyte (i.e., as the level of analyte increase then the level of reactant compound and the signal at the electrode decreases.)

In other embodiments, the relevant second compound is a product compound F, as shown in reaction equation (3). The product compound F is formed by the catalyzed reaction of analyte D and then be directly electrolyzed at the electrode or indirectly electrolyzed using an electron transfer agent and, optionally, a catalyst. In these embodiments, the signal arising from the direct or indirect electrolysis of the product compound F at the working electrode corresponds directly to the level of the analyte (unless there are other sources of the product compound). As the level of analyte increases, the level of the product compound and signal at the working electrode increases.

Those skilled in the art will recognize that there are many different reactions that will achieve the same result; namely the electrolysis of an analyte or a compound whose level depends on the level of the analyte. Reaction equations (1) through (6) illustrate non-limiting examples of such reactions.

Temperature Probe

A variety of optional items may be included in the sensor. One optional item is a temperature probe **66** (FIGS. **8** and **11**). The temperature probe **66** may be made using a variety of known designs and materials. One exemplary temperature probe **66** is formed using two probe leads **68**, **70** connected to each other through a temperature-dependent element **72** that is formed using a material with a temperature-dependent characteristic. An example of a suitable temperature-dependent characteristic is the resistance of the temperature-dependent element **72**.

The two probe leads **68**, **70** are typically formed using a metal, an alloy, a semimetal, such as graphite, a degenerate or highly doped semiconductor, or a small-band gap semiconductor. Examples of suitable materials include gold, silver, ruthenium oxide, titanium nitride, titanium dioxide, indium doped tin oxide, tin doped indium oxide, or graphite. The temperature-dependent element **72** is typically made using a fine trace (e.g., a conductive trace that has a smaller cross-section than that of the probe leads **68**, **70**) of the same conductive material as the probe leads, or another material such as a carbon ink, a carbon fiber, or platinum, which has a temperature-dependent characteristic, such as resistance, that provides a temperature-dependent signal when a voltage source is attached to the two probe leads **68**, **70** of the temperature probe **66**. The temperature-dependent characteristic of the temperature-dependent element **72** may either increase or decrease with temperature. Preferably, the temperature dependence of the characteristic of the temperature-dependent element **72** is approximately linear with temperature over the expected range of biological temperatures (about 25 to 45° C.), although this is not required.

Typically, a signal (e.g., a current) having an amplitude or other property that is a function of the temperature can be obtained by providing a potential across the two probe leads **68**, **70** of the temperature probe **66**. As the temperature changes, the temperature-dependent characteristic of the temperature-dependent element **72** increases or decreases with a corresponding change in the signal amplitude. The signal from the temperature probe **66** (e.g., the amount of current flowing through the probe) may be combined with the signal obtained from the working electrode **58** by, for example, scaling the temperature probe signal and then adding or subtracting the scaled temperature probe signal from the signal at the working electrode **58**. In this manner, the temperature probe **66** can provide a temperature adjustment for the output from the working electrode **58** to offset the temperature dependence of the working electrode **58**.

One embodiment of the temperature probe includes probe leads **68**, **70** formed as two spaced-apart channels with a temperature-dependent element **72** formed as a cross-channel connecting the two spaced-apart channels, as illustrated in FIG. **8**. The two spaced-apart channels contain a conductive material, such as a metal, alloy, semimetal, degenerate semiconductor, or metallic compound. The cross-channel may contain the same material (provided the cross-channel has a smaller cross-section than the two spaced-apart channels) as the probe leads **68**, **70**. In other embodiments, the material in the cross-channel is different than the material of the probe leads **68**, **70**.

One exemplary method for forming this particular temperature probe includes forming the two spaced-apart channels and then filling them with the metallic or alloyed conductive material. Next, the cross-channel is formed and then filled with the desired material. The material in the cross-channel overlaps with the conductive material in each of the two spaced-apart channels to form an electrical connection.

For proper operation of the temperature probe **66**, the temperature-dependent element **72** of the temperature probe **66** cannot be shorted by conductive material formed between the two probe leads **68**, **70**. In addition, to prevent conduction between the two probe leads **68**, **70** by ionic species within the body or sample fluid, a covering may be provided over the temperature-dependent element **72**, and preferably over the portion of the probe leads **68**, **70** that is implanted in the patient. The covering may be, for example, a non-conducting film disposed over the temperature-dependent element **72** and probe leads **68**, **70** to prevent the ionic conduction. Suitable non-conducting films include, for example, Kapton™ polyimide films (DuPont, Wilmington, Del.).

Another method for eliminating or reducing conduction by ionic species in the body or sample fluid is to use an ac voltage source connected to the probe leads **68**, **70**. In this way, the positive and negative ionic species are alternately attracted and repelled during each half cycle of the ac voltage. This results in no net attraction of the ions in the body or sample fluid to the temperature probe **66**. The maximum amplitude of the ac current through the temperature-dependent element **72** may then be used to correct the measurements from the working electrodes **58**.

The temperature probe can be placed on the same substrate as the electrodes. Alternatively, a temperature probe may be placed on a separate substrate. In addition, the temperature probe may be used by itself or in conjunction with other devices.

Another embodiment of a temperature probe utilizes the temperature dependence of the conductivity of a solution

(e.g., blood or interstitial fluid). Typically, the conductivity of an electrolyte-containing solution is dependent on the temperature of the solution, assuming that the concentration of electrolytes is relatively constant. Blood, interstitial fluid, and other bodily fluids are solutions with relatively constant levels of electrolytes. Thus, a sensor **42** can include two or more conductive traces (not shown) which are spaced apart by a known distance. A portion of these conductive traces is exposed to the solution and the conductivity between the exposed portions of the conductive traces is measured using known techniques (e.g., application of a constant or known current or potential and measurement of the resulting potential or current, respectively, to determine the conductivity).

A change in conductivity is related to a change in temperature. This relation can be modeled using linear, quadratic, exponential, or other relations. The parameters for this relationship typically do not vary significantly between most people. The calibration for the temperature probe can be determined by a variety of methods, including, for example, calibration of each sensor **42** using an independent method of determining temperature (e.g., a thermometer, an optical or electrical temperature detector, or the temperature probe **66**, described above) or calibrating one sensor **42** and using that calibration for all other sensors in a batch based on uniformity in geometry.

Biocompatible Layer

An optional biocompatible film layer **75** is formed over at least that portion of the sensor **42** which is subcutaneously inserted into the patient, as shown in FIG. **9**. This optional biocompatible film layer **75** may serve one or more functions. The biocompatible film layer **75** prevents the penetration of large biomolecules into the electrodes. This is accomplished by using a biocompatible film layer **75** having a pore size that is smaller than the biomolecules that are to be excluded. Such biomolecules may foul the electrodes and/or the sensing layer **64** thereby reducing the effectiveness of the sensor **42** and altering the expected signal amplitude for a given analyte concentration. The fouling of the working electrodes **58** may also decrease the effective life of the sensor **42**. The biocompatible film layer **75** may also prevent protein adhesion to the sensor **42**, formation of blood clots, and other undesirable interactions between the sensor **42** and body.

For example, the sensor may be completely or partially coated on its exterior with a biocompatible coating. A preferred biocompatible coating is a hydrogel which contains at least 20 wt. % fluid when in equilibrium with the analyte-containing fluid. Examples of suitable hydrogels are described in U.S. Pat. No. 5,593,852, incorporated herein by reference, and include crosslinked polyethylene oxides, such as polyethylene oxide tetraacrylate.

Interferent-Eliminating Layer

An interferent-eliminating layer (not shown) may be included in the sensor **42**. The interferent-eliminating layer may be incorporated in the biocompatible layer **75** or in the mass transport limiting layer **74** (described below) or may be a separate layer. Interferents are molecules or other species that are electroreduced or electrooxidized at the electrode, either directly or via an electron transfer agent, to produce a false signal. In one embodiment, a film or membrane prevents the penetration of one or more interferents into the region around the working electrodes **58**. Preferably, this type of interferent-eliminating layer is much less permeable to one or more of the interferents than to the analyte.

The interferent-eliminating layer may include ionic components, such as Nafion® incorporated into a polymeric matrix to reduce the permeability of the interferent-eliminating layer to ionic interferents having the same charge as the ionic components. For example, negatively charged compounds or compounds that form negative ions may be incorporated in the interferent-eliminating layer to reduce the permeation of negative species in the body or sample fluid.

Another example of an interferent-eliminating layer includes a catalyst for catalyzing a reaction which removes interferents. One example of such a catalyst is a peroxidase. Hydrogen peroxide reacts with interferents, such as acetaminophen, urate, and ascorbate. The hydrogen peroxide may be added to the analyte-containing fluid or may be generated in situ, by, for example, the reaction of glucose or lactate in the presence of glucose oxidase or lactate oxidase, respectively. Examples of interferent eliminating layers include a peroxidase enzyme crosslinked (a) using gluteraldehyde as a crosslinking agent or (b) oxidation of oligosaccharide groups in the peroxidase glycoenzyme with $NaIO_4$, followed by coupling of the aldehydes formed to hydrazide groups in a polyacrylamide matrix to form hydrazones are describe in U.S. Pat. Nos. 5,262,305 and 5,356,786, incorporated herein by reference.

Mass Transport Limiting Layer

A mass transport limiting layer **74** may be included with the sensor to act as a diffusion-limiting barrier to reduce the rate of mass transport of the analyte, for example, glucose or lactate, into the region around the working electrodes **58**. By limiting the diffusion of the analyte, the steady state concentration of the analyte in the proximity of the working electrode **58** (which is proportional to the concentration of the analyte in the body or sample fluid) can be reduced. This extends the upper range of analyte concentrations that can still be accurately measured and may also expand the range in which the current increases approximately linearly with the level of the analyte.

It is preferred that the permeability of the analyte through the film layer **74** vary little or not at all with temperature, so as to reduce or eliminate the variation of current with temperature. For this reason, it is preferred that in the biologically relevant temperature range from about 25° C. to about 45° C., and most importantly from 30° C. to 40° C., neither the size of the pores in the film nor its hydration or swelling change excessively. Preferably, the mass transport limiting layer is made using a film that absorbs less than 5 wt. % of fluid over 24 hours. This may reduce or obviate any need for a temperature probe. For implantable sensors, it is preferable that the mass transport limiting layer is made using a film that absorbs less than 5 wt. % of fluid over 24 hours at 37° C.

Particularly useful materials for the film layer **74** are membranes that do not swell in the analyte-containing fluid that the sensor tests. Suitable membranes include 3 to 20,000 nm diameter pores. Membranes having 5 to 500 nm diameter pores with well-defined, uniform pore sizes and high aspect ratios are preferred. In one embodiment, the aspect ratio of the pores is preferably two or greater and more preferably five or greater.

Well-defined and uniform pores can be made by track etching a polymeric membrane using accelerated electrons, ions, or particles emitted by radioactive nuclei. Most preferred are anisotropic, polymeric, track etched membranes that expand less in the direction perpendicular to the pores than in the direction of the pores when heated. Suitable polymeric membranes included polycarbonate membranes from Poretics (Livermore, Calif., catalog number 19401, 0.01 μm pore size polycarbonate membrane) and Corning Costar Corp. (Cambridge, Mass., Nucleopore™ brand membranes with 0.015 μm pore size). Other polyolefin and polyester films may be used. It is preferred that the permeability of the mass transport limiting membrane changes no more than 4%,

preferably, no more than 3%, and, more preferably, no more than 2%, per ° C. in the range from 30° C. to 40° C. when the membranes resides in the subcutaneous interstitial fluid.

In some embodiments of the invention, the mass transport limiting layer **74** may also limit the flow of oxygen into the sensor **42**. This can improve the stability of sensors **42** that are used in situations where variation in the partial pressure of oxygen causes non-linearity in sensor response. In these embodiments, the mass transport limiting layer **74** restricts oxygen transport by at least 40%, preferably at least 60%, and more preferably at least 80%, than the membrane restricts transport of the analyte. For a given type of polymer, films having a greater density (e.g., a density closer to that of the crystalline polymer) are preferred. Polyesters, such as polyethylene terephthalate, are typically less permeable to oxygen and are, therefore, preferred over polycarbonate membranes.

Anticlotting Agent

An implantable sensor may also, optionally, have an anticlotting agent disposed on a portion the substrate which is implanted into a patient. This anticlotting agent may reduce or eliminate the clotting of blood or other body fluid around the sensor, particularly after insertion of the sensor. Blood clots may foul the sensor or irreproducibly reduce the amount of analyte which diffuses into the sensor. Examples of useful anticlotting agents include heparin and tissue plasminogen activator (TPA), as well as other known anticlotting agents.

The anticlotting agent may be applied to at least a portion of that part of the sensor **42** that is to be implanted. The anticlotting agent may be applied, for example, by bath, spraying, brushing, or dipping. The anticlotting agent is allowed to dry on the sensor **42**. The anticlotting agent may be immobilized on the surface of the sensor or it may be allowed to diffuse away from the sensor surface. Typically, the quantities of anticlotting agent disposed on the sensor are far below the amounts typically used for treatment of medical conditions involving blood clots and, therefore, have only a limited, localized effect.

Referring to FIGS. **29**A-**29**B, the signal response over time is shown between sensors that include an anti-clotting or anti-thrombotic agent such as, for example, heparin, and sensors that do not include any anti-clotting or anti-thrombotic agent. The data shown in FIGS. **29**A-**29**B illustrates the current signal levels from the sensors immersed in whole blood from two separate donors, respectively. As described in further detail below, the sensors **42** that include heparin show signal (current) strength over a longer period of time compared to the signals from the sensors **42'** without heparin.

The data described below was obtained with the sensors **42** in whole blood, but it is to be understood that analogous results may be obtained using interstitial fluid, that is the sensor **42** in one embodiment may be placed in the interstitial fluid of a patient. During the sensor **42** insertion process, blood vessels will be severed thus resulting in bleeding at or around the sensor **42** location upon placement under the skin of the patient. Moreover, interstitial fluid over a period of time may clot, which in general, and white and/or red cells may aggregate around the sensor **42**. These packed cells around the sensor **42** consume glucose and in turn, block the glucose from reaching the sensor **42**.

By way of illustration, three sensors **42** provided with (for example, coated) anti-clotting or anti-thrombotic agents such as, for example, heparin are placed in the whole blood from two different donors, and the electrical contacts of the sensors **42** are coupled to respective current monitoring devices. In addition, several control sensors **42** without heparin coating are also placed in the same whole blood, respectively, with the electrical contacts of the sensors **42** coupled to respective current monitoring devices. The current signal levels from all of the sensors **42** are then measured over a predetermined time period and the result shown in FIGS. **29**A-**29**B.

Referring to FIGS. **29**A-**29**B, it can be seen that over a 3.5 hour period, the current signals from sensors **42** with heparin coating while in contact with the whole blood degrade at a much slower rate than the current signals from the sensor **42'** that do not have any heparin coating. In other words, area of the sensors **42** in contact with the whole blood form a clot around the sensors **42** and eventually block substantially all signals to the sensors **42** such that the current levels detected from the sensors **42** become attenuated. From the FIGS. **29**A-**29**B, it can be seen that the sensors **42** provided with the anti-clotting or anti-thrombotic agent (such as heparin, for example) take longer for the current signals to decay (or degrade over the time period of measurement), thus improving the accuracy of the sensor data.

Sensor Lifetime

The sensor **42** may be designed to be a replaceable component in an in vivo analyte monitor, and particularly in an implantable analyte monitor. Typically, the sensor **42** is capable of operation over a period of days. Preferably, the period of operation is at least one day, more preferably at least three days, and most preferably at least one week. The sensor **42** can then be removed and replaced with a new sensor. The lifetime of the sensor **42** may be reduced by the fouling of the electrodes or by the leaching of the electron transfer agent or catalyst. These limitations on the longevity of the sensor **42** can be overcome by the use of a biocompatible layer **75** or non-leachable electron transfer agent and catalyst, respectively, as described above.

Another primary limitation on the lifetime of the sensor **42** is the temperature stability of the catalyst. Many catalysts are enzymes, which are very sensitive to the ambient temperature and may degrade at temperatures of the patient's body (e.g., approximately 37° C. for the human body). Thus, robust enzymes should be used where available. The sensor **42** should be replaced when a sufficient amount of the enzyme has been deactivated to introduce an unacceptable amount of error in the measurements.

Insertion Device

An insertion device **120** can be used to subcutaneously insert the sensor **42** into the patient, as illustrated in FIG. **12**. The insertion device **120** is typically formed using structurally rigid materials, such as metal or rigid plastic. Preferred materials include stainless steel and ABS (acrylonitrile-butadiene-styrene) plastic. In some embodiments, the insertion device **120** is pointed and/or sharp at the tip **121** to facilitate penetration of the skin of the patient. A sharp, thin insertion device may reduce pain felt by the patient upon insertion of the sensor **42**. In other embodiments, the tip **121** of the insertion device **120** has other shapes, including a blunt or flat shape. These embodiments may be particularly useful when the insertion device **120** does not penetrate the skin but rather serves as a structural support for the sensor **42** as the sensor **42** is pushed into the skin.

The insertion device **120** may have a variety of cross-sectional shapes, as shown in FIGS. **13**A, **13**B, and **13**C. The insertion device **120** illustrated in FIG. **13**A is a flat, planar, pointed strip of rigid material which may be attached or otherwise coupled to the sensor **42** to ease insertion of the sensor **42** into the skin of the patient, as well as to provide structural support to the sensor **42** during insertion. The insertion devices **120** of FIGS. **13**B and **13**C are U- or V-shaped implements that support the sensor **42** to limit the amount that the sensor **42** may bend or bow during insertion. The cross-sectional width **124** of the insertion devices **120** illustrated in

FIGS. **13**B and **13**C is typically 1 mm or less, preferably 700 μm or less, more preferably 500 μm or less, and most preferably 300 μm or less. The cross-sectional height **126** of the insertion device **120** illustrated in FIGS. **13**B and **13**C is typically about 1 mm or less, preferably about 700 μm or less, and more preferably about 500 μm or less.

The sensor **42** itself may include optional features to facilitate insertion. For example, the sensor **42** may be pointed at the tip **123** to ease insertion, as illustrated in FIG. **12**. In addition, the sensor **42** may include a barb **125** which helps retain the sensor **42** in the subcutaneous tissue of the patient. The barb **125** may also assist in anchoring the sensor **42** within the subcutaneous tissue of the patient during operation of the sensor **42**. However, the barb **125** is typically small enough that little damage is caused to the subcutaneous tissue when the sensor **42** is removed for replacement. The sensor **42** may also include a notch **127** that can be used in cooperation with a corresponding structure (not shown) in the insertion device to apply pressure against the sensor **42** during insertion, but disengage as the insertion device **120** is removed. One example of such a structure in the insertion device is a rod (not shown) between two opposing sides of an insertion device **120** and at an appropriate height of the insertion device **120**.

In operation, the sensor **42** is placed within or next to the insertion device **120** and then a force is provided against the insertion device **120** and/or sensor **42** to carry the sensor **42** into the skin of the patient. In one embodiment, the force is applied to the sensor **42** to push the sensor into the skin, while the insertion device **120** remains stationary and provides structural support to the sensor **42**. Alternatively, the force is applied to the insertion device **120** and optionally to the sensor **42** to push a portion of both the sensor **42** and the insertion device **120** through the skin of the patient and into the subcutaneous tissue. The insertion device **120** is optionally pulled out of the skin and subcutaneous tissue with the sensor **42** remaining in the subcutaneous tissue due to frictional forces between the sensor **42** and the patient's tissue. If the sensor **42** includes the optional barb **125**, then this structure may also facilitate the retention of the sensor **42** within the interstitial tissue as the barb catches in the tissue.

The force applied to the insertion device **120** and/or the sensor **42** may be applied manually or mechanically. Preferably, the sensor **42** is reproducibly inserted through the skin of the patient. In one embodiment, an insertion gun is used to insert the sensor. One example of an insertion gun **200** for inserting a sensor **42** is shown in FIG. **26**. The insertion gun **200** includes a housing **202** and a carrier **204**. The insertion device **120** is typically mounted on the carrier **204** and the sensor **42** is pre-loaded into the insertion device **120**. The carrier **204** drives the sensor **42** and, optionally, the insertion device **120** into the skin of the patient using, for example, a cocked or wound spring, a burst of compressed gas, an electromagnet repelled by a second magnet, or the like, within the insertion gun **200**. In some instances, for example, when using a spring, the carrier **204** and insertion device may be moved, cocked, or otherwise prepared to be directed towards the skin of the patient.

After the sensor **42** is inserted, the insertion gun **200** may contain a mechanism which pulls the insertion device **120** out of the skin of the patient. Such a mechanism may use a spring, electromagnet, or the like to remove the insertion device **120**.

The insertion gun may be reusable. The insertion device **120** is often disposable to avoid the possibility of contamination. Alternatively, the insertion device **120** may be sterilized and reused. In addition, the insertion device **120** and/or the sensor **42** may be coated with an anticlotting agent to prevent fouling of the sensor **42**.

In one embodiment, the sensor **42** is injected between 2 to 12 mm into the interstitial tissue of the patient for subcutaneous implantation. Preferably, the sensor is injected 3 to 9 mm, and more preferably 5 to 7 mm, into the interstitial tissue. Other embodiments of the invention, may include sensors implanted in other portions of the patient, including, for example, in an artery, vein, or organ. The depth of implantation varies depending on the desired implantation target.

Although the sensor **42** may be inserted anywhere in the body, it is often desirable that the insertion site be positioned so that the on-skin sensor control unit **44** can be concealed. In addition, it is often desirable that the insertion site be at a place on the body with a low density of nerve endings to reduce the pain to the patient. Examples of preferred sites for insertion of the sensor **42** and positioning of the on-skin sensor control unit **44** include the abdomen, thigh, leg, upper arm, and shoulder.

An insertion angle is measured from the plane of the skin (i.e., inserting the sensor perpendicular to the skin would be a 90° insertion angle). Insertion angles usually range from 10 to 90°, typically from 15 to 60°, and often from 30 to 45°.

On-Skin Sensor Control Unit

The on-skin sensor control unit **44** is configured to be placed on the skin of a patient. The on-skin sensor control unit **44** is optionally formed in a shape that is comfortable to the patient and which may permit concealment, for example, under a patient's clothing. The thigh, leg, upper arm, shoulder, or abdomen are convenient parts of the patient's body for placement of the on-skin sensor control unit **44** to maintain concealment. However, the on-skin sensor control unit **44** may be positioned on other portions of the patient's body. One embodiment of the on-skin sensor control unit **44** has a thin, oval shape to enhance concealment, as illustrated in FIGS. **14-16**. However, other shapes and sizes may be used.

The particular profile, as well as the height, width, length, weight, and volume of the on-skin sensor control unit **44** may vary and depends, at least in part, on the components and associated functions included in the on-skin sensor control unit **44**, as discussed below. For example, in some embodiments, the on-skin sensor control unit **44** has a height of 1.3 cm or less, and preferably 0.7 cm or less. In some embodiments, the on-skin sensor control unit **44** has a weight of 90 grams or less, preferably 45 grams or less, and more preferably 25 grams or less. In some embodiments, the on-skin sensor control unit **44** has a volume of about 15 cm^3 or less, preferably about 10 cm^3 or less, more preferably about 5 cm^3 or less, and most preferably about 2.5 cm^3 or less.

The on-skin sensor control unit **44** includes a housing **45**, as illustrated in FIGS. **14-16**. The housing **45** is typically formed as a single integral unit that rests on the skin of the patient. The housing **45** typically contains most or all of the electronic components, described below, of the on-skin sensor control unit **44**. The on-skin sensor control unit **44** usually includes no additional cables or wires to other electronic components or other devices. If the housing includes two or more parts, then those parts typically fit together to form a single integral unit.

The housing **45** of the on-skin sensor control unit **44**, illustrated in FIGS. **14-16**, may be formed using a variety of materials, including, for example, plastic and polymeric materials, particularly rigid thermoplastics and engineering thermoplastics. Suitable materials include, for example, polyvinyl chloride, polyethylene, polypropylene, polystyrene, ABS polymers, and copolymers thereof. The housing **45**

of the on-skin sensor control unit **44** may be formed using a variety of techniques including, for example, injection molding, compression molding, casting, and other molding methods. Hollow or recessed regions may be formed in the housing **45** of the on-skin sensor control unit **44**. The electronic components of the on-skin sensor control unit **44**, described below, and/or other items, such as a battery or a speaker for an audible alarm, may be placed in the hollow or recessed areas.

In some embodiments, conductive contacts **80** are provided on the exterior of the housing **45**. In other embodiments, the conductive contacts **80** are provided on the interior of the housing **45**, for example, within a hollow or recessed region.

In some embodiments, the electronic components and/or other items are incorporated into the housing **45** of the on-skin sensor control unit **44** as the plastic or polymeric material is molded or otherwise formed. In other embodiments, the electronic components and/or other items are incorporated into the housing **45** as the molded material is cooling or after the molded material has been reheated to make it pliable. Alternatively, the electronic components and/or other items may be secured to the housing **45** using fasteners, such as screws, nuts and bolts, nails, staples, rivets, and the like or adhesives, such as contact adhesives, pressure sensitive adhesives, glues, epoxies, adhesive resins, and the like. In some cases, the electronic components and/or other items are not affixed to the housing **45** at all.

In some embodiments, the housing **45** of the on-skin sensor control unit **44** is a single piece. The conductive contacts **80** may be formed on the exterior of the housing **45** or on the interior of the housing **45** provided there is a port **78** in the housing **45** through which the sensor **42** can be directed to access the conductive contacts **80**.

In other embodiments, the housing **45** of the on-skin sensor control unit **44** is formed in at least two separate portions that fit together to form the housing **45**, for example, a base **74** and a cover **76**, as illustrated in FIGS. **14-16**. The two or more portions of the housing **45** may be entirely separate from each other. Alternatively, at least some of the two or more portions of the housing **45** may be connected together, for example, by a hinge, to facilitate the coupling of the portions to form the housing **45** of the on-skin sensor control unit **44**.

These two or more separate portions of the housing **45** of the on-skin sensor control unit **44** may have complementary, interlocking structures, such as, for example, interlocking ridges or a ridge on one component and a complementary groove on another component, so that the two or more separate components may be easily and/or firmly coupled together. This may be useful, particularly if the components are taken apart and fit together occasionally, for example, when a battery or sensor **42** is replaced. However, other fasteners may also be used to couple the two or more components together, including, for example, screws, nuts and bolts, nails, staples, rivets, or the like. In addition, adhesives, both permanent or temporary, may be used including, for example, contact adhesives, pressure sensitive adhesives, glues, epoxies, adhesive resins, and the like.

Typically, the housing **45** is at least water resistant to prevent the flow of fluids into contact with the components in the housing, including, for example, the conductive contacts **80**. Preferably, the housing is waterproof. In one embodiment, two or more components of the housing **45**, for example, the base **74** and the cover **76**, fit together tightly to form a hermetic, waterproof, or water resistant seal so that fluids cannot flow into the interior of the on-skin sensor control unit **44**. This may be useful to avoid corrosion currents and/or degradation of items within the on-skin sensor control unit **44**, such as the conductive contacts, the battery, or the electronic components, particularly when the patient engages in such activities as showering, bathing, or swimming.

Water resistant, as used herein, means that there is no penetration of water through a water resistant seal or housing when immersed in water at a depth of one meter at sea level. Waterproof, as used herein, means that there is no penetration of water through the waterproof seal or housing when immersed in water at a depth of ten meters, and preferably fifty meters, at sea level. It is often desirable that the electronic circuitry, power supply (e.g., battery), and conductive contacts of the on-skin sensor control unit, as well as the contact pads of the sensor, are contained in a water resistant, and preferably, a waterproof, environment.

In addition to the portions of the housing **45**, such as the base **74** and cover **76**, there may be other individually-formed pieces of the on-skin sensor control unit **44**, which may be assembled during or after manufacture. One example of an individually-formed piece is a cover for electronic components that fits a recess in the base **74** or cover **76**. Another example is a cover for a battery provided in the base **74** or cover **76**. These individually-formed pieces of the on-skin sensor control unit **44** may be permanently affixed, such as, for example, a cover for electronic components, or removably affixed, such as, for example, a removable cover for a battery, to the base **74**, cover **76**, or other component of the on-skin sensor control unit **44**. Methods for affixing these individually-formed pieces include the use of fasteners, such as screws, nuts and bolts, staples, nails, rivets, and the like, frictional fasteners, such as tongue and groove structures, and adhesives, such as contact adhesives, pressure sensitive adhesives, glues, epoxies, adhesive resins, and the like.

One embodiment of the on-skin sensor control unit **44** is a disposable unit complete with a battery for operating the unit. There are no portions of the unit that the patient needs to open or remove, thereby reducing the size of the unit and simplifying its construction. The on-skin sensor control unit **44** optionally remains in a sleep mode prior to use to conserve the battery's power. The on-skin sensor control unit **44** detects that it is being used and activates itself. Detection of use may be through a number of mechanisms. These include, for example, detection of a change in resistance across the electrical contacts, actuation of a switch upon mating the on-skin sensor control unit **44** with a mounting unit **77** (see FIGS. **27**A and **28**A). The on-skin sensor control unit **44** is typically replaced when it no longer operates within threshold limits, for example, if the battery or other power source does not generate sufficient power. Often this embodiment of the on-skin sensor control unit **44** has conductive contacts **80** on the exterior of the housing **45**. Once the sensor **42** is implanted in the patient, the sensor control unit **44** is placed over the sensor **42** with the conductive contacts **80** in contact with the contact pads **49** of the sensor **42**.

The on-skin sensor control unit **44** is typically attached to the skin **75** of the patient, as illustrated in FIG. **17**. The on-skin sensor control unit **44** may be attached by a variety of techniques including, for example, by adhering the on-skin sensor control unit **44** directly to the skin **75** of the patient with an adhesive provided on at least a portion of the housing **45** of the on-skin sensor control unit **44** which contacts the skin **75** or by suturing the on-skin sensor control unit **44** to the skin **75** through suture openings (not shown) in the sensor control unit **44**.

Another method of attaching the housing **45** of the on-skin sensor control unit **44** to the skin **75** includes using a mounting unit, **77**. The mounting unit **77** is often a part of the on-skin sensor control unit **44**. One example of a suitable mounting

unit **77** is a double-sided adhesive strip, one side of which is adhered to a surface of the skin of the patient and the other side is adhered to the on-skin sensor control unit **44**. In this embodiment, the mounting unit **77** may have an optional opening **79** which is large enough to allow insertion of the sensor **42** through the opening **79**. Alternatively, the sensor may be inserted through a thin adhesive and into the skin.

A variety of adhesives may be used to adhere the on-skin sensor control unit **44** to the skin **75** of the patient, either directly or using the mounting unit **77**, including, for example, pressure sensitive adhesives (PSA) or contact adhesives. Preferably, an adhesive is chosen which is not irritating to all or a majority of patients for at least the period of time that a particular sensor **42** is implanted in the patient. Alternatively, a second adhesive or other skin-protecting compound may be included with the mounting unit so that a patient, whose skin is irritated by the adhesive on the mounting unit **77**, can cover his skin with the second adhesive or other skin-protecting compound and then place the mounting unit **77** over the second adhesive or other skin-protecting compound. This should substantially prevent the irritation of the skin of the patient because the adhesive on the mounting unit **77** is no longer in contact with the skin, but is instead in contact with the second adhesive or other skin-protecting compound.

When the sensor **42** is changed, the on-skin sensor control unit **44** may be moved to a different position on the skin **75** of the patient, for example, to avoid excessive irritation. Alternatively, the on-skin sensor control unit **44** may remain at the same place on the skin of the patient until it is determined that the unit **44** should be moved.

Another embodiment of a mounting unit **77** used in an on-skin sensor control unit **44** is illustrated in FIGS. **27**A and **27**B. The mounting unit **77** and a housing **45** of an on-skin sensor control unit **44** are mounted together in, for example, an interlocking manner, as shown in FIG. **27**A. The mounting unit **77** is formed, for example, using plastic or polymer materials, including, for example, polyvinyl chloride, polyethylene, polypropylene, polystyrene, ABS polymers, and copolymers thereof. The mounting unit **77** may be formed using a variety of techniques including, for example, injection molding, compression molding, casting, and other molding methods.

The mounting unit **77** typically includes an adhesive on a bottom surface of the mounting unit **77** to adhere to the skin of the patient or the mounting unit **77** is used in conjunction with, for example, double-sided adhesive tape or the like. The mounting unit **77** typically includes an opening **79** through which the sensor **42** is inserted, as shown in FIG. **27**B. The mounting unit **77** may also include a support structure **220** for holding the sensor **42** in place and against the conductive contacts **80** on the on-skin sensor control unit **42**. The mounting unit **77**, also, optionally, includes a positioning structure **222**, such as an extension of material from the mounting unit **77**, that corresponds to a structure (not shown), such as an opening, on the sensor **42** to facilitate proper positioning of the sensor **42**, for example, by aligning the two complementary structures.

In another embodiment, a coupled mounting unit **77** and housing **45** of an on-skin sensor control unit **44** is provided on an adhesive patch **204** with an optional cover **206** to protect and/or confine the housing **45** of the on-skin sensor control unit **44**, as illustrated in FIG. **28**A. The optional cover may contain an adhesive or other mechanism for attachment to the housing **45** and/or mounting unit **77**. The mounting unit **77** typically includes an opening **49** through which a sensor **42** is disposed, as shown in FIG. **28**B. The opening **49** may optionally be configured to allow insertion of the sensor **42** through the opening **49** using an insertion device **120** or insertion gun **200** (see FIG. **26**). The housing **45** of the on-skin sensor control unit **44** has a base **74** and a cover **76**, as illustrated in FIG. **28**C. A bottom view of the housing **45**, as shown in FIG. **28**D, illustrates ports **230** through which conductive contacts (not shown) extend to connect with contact pads on the sensor **42**. A board **232** for attachment of circuit components may optionally be provided within the on-skin sensor control unit **44**, as illustrated in FIG. **28**E.

In some embodiments, the adhesive on the on-skin sensor control unit **44** and/or on any of the embodiments of the mounting unit **77** is water resistant or waterproof to permit activities such as showering and/or bathing while maintaining adherence of the on-skin sensor control unit **44** to the skin **75** of the patient and, at least in some embodiments, preventing water from penetrating into the sensor control unit **44**. The use of a water resistant or waterproof adhesive combined with a water resistant or waterproof housing **45** protects the components in the sensor control unit **44** and the contact between the conductive contacts **80** and the sensor **42** from damage or corrosion. An example of a non-irritating adhesive that repels water is Tegaderm (3M, St. Paul, Minn.).

In one embodiment, the on-skin sensor control unit **44** includes a sensor port **78** through which the sensor **42** enters the subcutaneous tissue of the patient, as shown in FIGS. **14** to **16**. The sensor **42** may be inserted into the subcutaneous tissue of the patient through the sensor port **78**. The on-skin sensor control unit **44** may then be placed on the skin of the patient with the sensor **42** being threaded through the sensor port **78**. If the housing **45** of the sensor **42** has, for example, a base **74** and a cover **76**, then the cover **76** may be removed to allow the patient to guide the sensor **42** into the proper position for contact with the conductive contacts **80**.

Alternatively, if the conductive contacts **80** are within the housing **45** the patient may slide the sensor **42** into the housing **45** until contact is made between the contact pads **49** and the conductive contacts **80**. The sensor control unit **44** may have a structure which obstructs the sliding of the sensor **42** further into the housing once the sensor **42** is properly positioned with the contact pads **49** in contact with the conductive contacts **80**.

In other embodiments, the conductive contacts **80** are on the exterior of the housing **45** (see e.g., FIGS. **27**A-**27**B and **28**A-**28**E). In these embodiments, the patient guides the contacts pads **49** of the sensor **42** into contact with the conductive contacts **80**. In some cases, a guiding structure may be provided on the housing **45** which guides the sensor **42** into the proper position. An example of such a structure includes a set of guiding rails extending from the housing **45** and having the shape of the sensor **42**.

In some embodiments, when the sensor **42** is inserted using an insertion device **120** (see FIG. **12**), the tip of the insertion device **120** or optional insertion gun **200** (see FIG. **26**) is positioned against the skin or the mounting unit **77** at the desired insertion point. In some embodiments, the insertion device **120** is positioned on the skin without any guide. In other embodiments, the insertion device **120** or insertion gun **200** is positioned using guides (not shown) in the mounting unit **77** or other portion of the on-skin sensor control unit **44**. In some embodiments, the guides, opening **79** in the mounting unit **77** and/or sensor port **78** in the housing **45** of the on-skin sensor control unit **44** have a shape which is complementary to the shape of the tip of the insertion device **120** and/or insertion gun **200** to limit the orientation of the insertion device **120** and/or insertion gun **200** relative to the opening **79** and/or sensor port **78**. The sensor can then be subcu-

taneously inserted into the patient by matching the complementary shape of the opening **79** or sensor port **78** with the insertion device **120** and/or insertion gun **200**.

In some embodiments, the shapes of a) the guides, opening **79**, or sensor port **78**, and (b) the insertion device **120** or insertion gun **200** are configured such that the two shapes can only be matched in a single orientation. This aids in inserting the sensor **42** in the same orientation each time a new sensor is inserted into the patient. This uniformity in insertion orientation may be required in some embodiments to ensure that the contact pads **49** on the sensor **42** are correctly aligned with appropriate conductive contacts **80** on the on-skin sensor control unit **44**. In addition, the use of the insertion gun, as described above, may ensure that the sensor **42** is inserted at a uniform, reproducible depth.

The sensor **42** and the electronic components within the on-skin sensor control unit **44** are coupled via conductive contacts **80**, as shown in FIGS. **14-16**. The one or more working electrodes **58**, counter electrode **60** (or counter/reference electrode), optional reference electrode **62**, and optional temperature probe **66** are attached to individual conductive contacts **80**. In the illustrated embodiment of FIGS. **14-16**, the conductive contacts **80** are provided on the interior of the on-skin sensor control unit **44**. Other embodiments of the on-skin sensor control unit **44** have the conductive contacts disposed on the exterior of the housing **45**. The placement of the conductive contacts **80** is such that they are in contact with the contact pads **49** on the sensor **42** when the sensor **42** is properly positioned within the on-skin sensor control unit **44**.

In the illustrated embodiment of FIGS. **14-16**, the base **74** and cover **76** of the on-skin sensor control unit **44** are formed such that, when the sensor **42** is within the on-skin sensor control unit **44** and the base **74** and cover **76** are fitted together, the sensor **42** is bent. In this manner, the contact pads **49** on the sensor **42** are brought into contact with the conductive contacts **80** of the on-skin sensor control unit **44**. The on-skin sensor control unit **44** may optionally contain a support structure **82** to hold, support, and/or guide the sensor **42** into the correct position.

Non-limiting examples of suitable conductive contacts **80** are illustrated in FIGS. **19**A-**19**D. In one embodiment, the conductive contacts **80** are pins **84** or the like, as illustrated in FIG. **19**A, which are brought into contact with the contact pads **49** on the sensor **42** when the components of the on-skin sensor control unit **44**, for example, the base **74** and cover **76**, are fitted together. A support **82** may be provided under the sensor **42** to promote adequate contact between the contact pads **49** on the sensor **42** and the pins **84**. The pins are typically made using a conductive material, such as a metal or alloy, for example, copper, stainless steel, or silver. Each pin has a distal end that extends from the on-skin sensor control unit **44** for contacting the contact pads **49** on the sensor **42**. Each pin **84** also has a proximal end that is coupled to a wire or other conductive strip that is, in turn, coupled to the rest of the electronic components (e.g., the power supply **95** and measurement circuit **96** of FIGS. **18**A and **18**B) within the on-skin sensor control unit **44**. Alternatively, the pins **84** may be coupled directly to the rest of the electronics.

In another embodiment, the conductive contacts **80** are formed as a series of conducting regions **88** with interspersed insulating regions **90**, as illustrated in FIG. **19**B. The conducting regions **88** may be as large or larger than the contact pads **49** on the sensor **42** to alleviate registration concerns. However, the insulating regions **90** should have sufficient width so that a single conductive region **88** does not overlap with two contact pads **49** as determined based on the expected variation in the position of the sensor **42** and contact pads **49** with respect to the conductive contacts **80**. The conducting regions **88** are formed using materials such as metals, alloys, or conductive carbon. The insulating regions **90** may be formed using known insulating materials including, for example, insulating plastic or polymer materials.

In a further embodiment, a unidirectional conducting adhesive **92** may be used between the contact pads **49** on the sensor **42** and conductive contacts **80** implanted or otherwise formed in the on-skin sensor control unit **44**, as shown in FIG. **19**C.

In yet another embodiment, the conductive contacts **80** are conductive members **94** that extend from a surface of the on-skin sensor control unit **44** to contact the contact pads **49**, as shown in FIG. **19**D. A variety of different shapes may be used for these members, however, they should be electrically insulated from each other. The conductive members **94** may be made using metal, alloy, conductive carbon, or conducting plastics and polymers.

Any of the exemplary conductive contacts **80** described above may extend from either the upper surface of the interior of the on-skin sensor control unit **44**, as illustrated in FIG. **19**A-**19**C, or from the lower surface of the interior of the on-skin sensor control unit **44**, as illustrated in FIG. **19**D, or from both the upper and lower surfaces of the interior of the on-skin sensor control unit **44**, particularly when the sensor **42** has contact pads **49** on both sides of the sensor.

Conductive contacts **80** on the exterior of the housing **45** may also have a variety of shapes as indicated in FIGS. **19**E and **19**F. For example, the conductive contacts **80** may be embedded in (FIG. **19**E) or extending out of (FIG. **19**F) the housing **45**.

The conductive contacts **80** are preferably made using a material which will not corrode due to contact with the contact pads **49** of the sensor **42**. Corrosion may occur when two different metals are brought in contact. Thus, if the contact pads **49** are formed using carbon then the preferred conductive contacts **80** may be made using any material, including metals or alloys. However, if any of the contact pads **49** are made with a metal or alloy then the preferred conductive contacts **80** for coupling with the metallic contact pads are made using a non-metallic conductive material, such as conductive carbon or a conductive polymer, or the conductive contacts **80** and the contact pads **49** are separated by a non-metallic material, such as a unidirectional conductive adhesive.

In one embodiment, electrical contacts are eliminated between the sensor **42** and the on-skin sensor control unit **44**. Power is transmitted to the sensor via inductive coupling, using, for example, closely space antennas (e.g., facing coils) (not shown) on the sensor and the on-skin sensor control unit. Changes in the electrical characteristics of the sensor control unit **44** (e.g., current) induce a changing magnetic field in the proximity of the antenna. The changing magnetic field induces a current in the antenna of the sensor. The close proximity of the sensor and on-skin sensor control unit results in reasonably efficient power transmission. The induced current in the sensor may be used to power potentiostats, operational amplifiers, capacitors, integrated circuits, transmitters, and other electronic components built into the sensor structure. Data is transmitted back to the sensor control unit, using, for example, inductive coupling via the same or different antennas and/or transmission of the signal via a transmitter on the sensor. The use of inductive coupling can eliminate electrical contacts between the sensor and the on-skin sensor control unit. Such contacts are commonly a source of noise

and failure. Moreover, the sensor control unit may then be entirely sealed which may increase the waterproofing of the on-skin sensor control unit.

An exemplary on-skin sensor control unit **44** can be prepared and used in the following manner. A mounting unit **77** having adhesive on the bottom is applied to the skin. An insertion gun **200** (see FIG. **26**) carrying the sensor **42** and the insertion device **120** is positioned against the mounting unit **77**. The insertion gun **200** and mounting unit **77** are optionally designed such that there is only one position in which the two properly mate. The insertion gun **200** is activated and a portion of the sensor **42** and optionally a portion of the insertion device **120** are driven through the skin into, for example, the subcutaneous tissue. The insertion gun **200** withdraws the insertion device **200**, leaving the portion of the sensor **42** inserted through the skin. The housing **45** of the on-skin control unit **44** is then coupled to the mounting unit **77**. Optionally, the housing **45** and the mounting unit **77** are formed such that there is only one position in which the two properly mate. The mating of the housing **45** and the mounting unit **77** establishes contact between the contact pads **49** (see e.g., FIG. **2**) on the sensor **42** and the conductive contacts **80** on the on-skin sensor control unit **44**. Optionally, this action activates the on-skin sensor control unit **44** to begin operation.

On-Skin Control Unit Electronics

The on-skin sensor control unit **44** also typically includes at least a portion of the electronic components that operate the sensor **42** and the analyte monitoring device system **40**. One embodiment of the electronics in the on-skin control unit **44** is illustrated as a block diagram in FIG. **18**A. The electronic components of the on-skin sensor control unit **44** typically include a power supply **95** for operating the on-skin control unit **44** and the sensor **42**, a sensor circuit **97** for obtaining signals from and operating the sensor **42**, a measurement circuit **96** that converts sensor signals to a desired format, and a processing circuit **109** that, at minimum, obtains signals from the sensor circuit **97** and/or measurement circuit **96** and provides the signals to an optional transmitter **98**. In some embodiments, the processing circuit **109** may also partially or completely evaluate the signals from the sensor **42** and convey the resulting data to the optional transmitter **98** and/or activate an optional alarm system **94** (see FIG. **18**B) if the analyte level exceeds a threshold. The processing circuit **109** often includes digital logic circuitry.

The on-skin sensor control unit **44** may optionally contain a transmitter **98** for transmitting the sensor signals or processed data from the processing circuit **109** to a receiver/display unit **46**, **48**; a data storage unit **102** for temporarily or permanently storing data from the processing circuit **109**; a temperature probe circuit **99** for receiving signals from and operating a temperature probe **66**; a reference voltage generator **101** for providing a reference voltage for comparison with sensor-generated signals; and/or a watchdog circuit **103** that monitors the operation of the electronic components in the on-skin sensor control unit **44**.

Moreover, the sensor control unit **44** often includes digital and/or analog components utilizing semiconductor devices, such as transistors. To operate these semiconductor devices, the on-skin control unit **44** may include other components including, for example, a bias control generator **105** to correctly bias analog and digital semiconductor devices, an oscillator **107** to provide a clock signal, and a digital logic and timing component **109** to provide timing signals and logic operations for the digital components of the circuit.

As an example of the operation of these components, the sensor circuit **97** and the optional temperature probe circuit **99** provide raw signals from the sensor **42** to the measurement circuit **96**. The measurement circuit **96** converts the raw signals to a desired format, using for example, a current-to-voltage converter, current-to-frequency converter, and/or a binary counter or other indicator that produces a signal proportional to the absolute value of the raw signal. This may be used, for example, to convert the raw signal to a format that can be used by digital logic circuits. The processing circuit **109** may then, optionally, evaluate the data and provide commands to operate the electronics.

FIG. **18**B illustrates a block diagram of another exemplary on-skin sensor control unit **44** that also includes optional components such as a receiver **110** to receive, for example, calibration data; a calibration storage unit (not shown) to hold, for example, factory-set calibration data, calibration data obtained via the receiver **110** and/or operational signals received, for example, from a receiver/display unit **46**, **48** or other external device; an alarm system **94** for warning the patient; and a deactivation switch **111** to turn off the alarm system.

Functions of the analyte monitoring system **40** and the sensor control unit **44** may be implemented using either software routines, hardware components, or combinations thereof. The hardware components may be implemented using a variety of technologies, including, for example, integrated circuits or discrete electronic components. The use of integrated circuits typically reduces the size of the electronics, which in turn may result in a smaller on-skin sensor control unit **44**.

The electronics in the on-skin sensor control unit **44** and the sensor **42** are operated using a power supply **95**. One example of a suitable power supply **95** is a battery, for example, a thin circular battery, such as those used in many watches, hearing aids, and other small electronic devices. Preferably, the battery has a lifetime of at least 30 days, more preferably, a lifetime of at least three months, and most preferably, a lifetime of at least one year. The battery is often one of the largest components in the on-skin control unit **44**, so it is often desirable to minimize the size of the battery. For example, a preferred battery's thickness is 0.5 mm or less, preferably 0.35 mm or less, and most preferably 0.2 mm or less. Although multiple batteries may be used, it is typically preferred to use only one battery.

The sensor circuit **97** is coupled via the conductive contacts **80** of the sensor control unit **44** to one or more sensors **42**, **42'**. Each of the sensors represents, at minimum, a working electrode **58**, a counter electrode **60** (or counter/reference electrode), and an optional reference electrode **62**. When two or more sensors **42**, **42'** are used, the sensors typically have individual working electrodes **58**, but may share a counter electrode **60**, counter/reference electrode, and/or reference electrode **62**.

The sensor circuit **97** receives signals from and operates the sensor **42** or sensors **42**, **42'**. The sensor circuit **97** may obtain signals from the sensor **42** using amperometric, coulometric, potentiometric, voltammetric, and/or other electrochemical techniques. The sensor circuit **97** is exemplified herein as obtaining amperometric signals from the sensor **42**, however, it will be understood that the sensor circuit can be appropriately configured for obtaining signals using other electrochemical techniques. To obtain amperometric measurements, the sensor circuit **97** typically includes a potentiostat that provides a constant potential to the sensor **42**. In other embodiments, the sensor circuit **97** includes an amperostat that supplies a constant current to the sensor **42** and can be used to obtain coulometric or potentiometric measurements.

The signal from the sensor **42** generally has at least one characteristic, such as, for example, current, voltage, or frequency, which varies with the concentration of the analyte. For example, if the sensor circuit **97** operates using amperometry, then the signal current varies with analyte concentration. The measurement circuit **96** may include circuitry which converts the information-carrying portion of the signal from one characteristic to another. For example, the measurement circuit **96** may include a current-to-voltage or current-to-frequency converter. The purpose of this conversion may be to provide a signal that is, for example, more easily transmitted, readable by digital circuits, and/or less susceptible to noise contributions.

One example of a standard current-to-voltage converter is provided in FIG. **20**A. In this converter, the signal from the sensor **42** is provided at one input terminal **134** of an operational amplifier **130** ("op amp") and coupled through a resistor **138** to an output terminal **136**. This particular current-to-voltage converter **131** may, however, be difficult to implement in a small CMOS chip because resistors are often difficult to implement on an integrated circuit. Typically, discrete resistor components are used. However, the used of discrete components increases the space needed for the circuitry.

An alternative current-to-voltage converter **141** is illustrated in FIG. **20**B. This converter includes an op amp **140** with the signal from the sensor **42** provided at input terminal **144** and a reference potential provided at input terminal **142**. A capacitor **145** is placed between the input terminal **144** and the output terminal **146**. In addition, switches **147***a*, **147***b*, **149***a*, and **149***b* are provided to allow the capacitor to charge and discharge at a rate determined by a clock (CLK) frequency. In operation, during one half cycle, switches **147***a* and **147***b* close and switches **149***a* and **149***b* open allowing the capacitor **145** to charge due to the attached potential VI. During the other half cycle, switches **147***a* and **147***b* open and switches **149***a* and **149***b* close to ground and allow the capacitor **145** to partially or fully discharge. The reactive impedance of the capacitor **145** is analogous to the resistance of the resistor **138** (see FIG. **20**A), allowing the capacitor **145** to emulate a resistor. The value of this "resistor" depends on the capacitance of the capacitor **145** and the clock frequency. By altering the clock frequency, the reactive impedance ("resistance value") of the capacitor changes. The value of the impedance ("resistance") of the capacitor **145** may be altered by changing the clock frequency. Switches **147***a*, **147***b*, **149***a*, and **149***b* may be implemented in a CMOS chip using, for example, transistors.

A current-to-frequency converter may also be used in the measurement circuit **96**. One suitable current-to-frequency converter includes charging a capacitor using the signal from the sensor **42**. When the potential across the capacitor exceeds a threshold value, the capacitor is allowed to discharge. Thus, the larger the current from the sensor **42**, the quicker the threshold potential is achieved. This results in a signal across the capacitor that has an alternating characteristic, corresponding to the charging and discharging of the capacitor, having a frequency which increases with an increase in current from the sensor **42**.

In some embodiments, the analyte monitoring system **40** includes two or more working electrodes **58** distributed over one or more sensors **42**. These working electrodes **58** may be used for quality control purposes. For example, the output signals and/or analyzed data derived using the two or more working electrodes **58** may be compared to determine if the signals from the working electrodes agree within a desired level of tolerance. If the output signals do not agree, then the patient may be alerted to replace the sensor or sensors. In some embodiments, the patient is alerted only if the lack of agreement between the two sensors persists for a predetermined period of time. The comparison of the two signals may be made for each measurement or at regular intervals. Alternatively or additionally, the comparison may be initiated by the patient or another person. Moreover, the signals from both sensors may be used to generate data or one signal may be discarded after the comparison.

Alternatively, if, for example, two working electrodes **58** have a common counter electrode **60** and the analyte concentration is measured by amperometry, then the current at the counter electrode **60** should be twice the current at each of the working electrodes, within a predetermined tolerance level, if the working electrodes are operating properly. If not, then the sensor or sensors should be replaced, as described above.

An example of using signals from only one working electrode for quality control includes comparing consecutive readings obtained using the single working electrode to determine if they differ by more than a threshold level. If the difference is greater than the threshold level for one reading or over a period of time or for a predetermined number of readings within a period of time then the patient is alerted to replace the sensor **42**. Typically, the consecutive readings and/or the threshold level are determined such that all expected excursions of the sensor signal are within the desired parameters (i.e., the sensor control unit **44** does not consider true changes in analyte concentration to be a sensor failure).

The sensor control unit **44** may also optionally include a temperature probe circuit **99**. The temperature probe circuit **99** provides a constant current through (or constant potential) across the temperature probe **66**. The resulting potential (or current) varies according to the resistance of the temperature dependent element **72**.

The output from the sensor circuit **97** and optional temperature probe circuit is coupled into a measurement circuit **96** that obtains signals from the sensor circuit **97** and optional temperature probe circuit **99** and, at least in some embodiments, provides output data in a form that, for example can be read by digital circuits. The signals from the measurement circuit **96** are sent to the processing circuit **109**, which in turn may provide data to an optional transmitter **98**. The processing circuit **109** may have one or more of the following functions: 1) transfer the signals from the measurement circuit **96** to the transmitter **98**, 2) transfer signals from the measurement circuit **96** to the data storage circuit **102**, 3) convert the information-carrying characteristic of the signals from one characteristic to another (when, for example, that has not been done by the measurement circuit **96**), using, for example, a current-to-voltage converter, a current-to-frequency converter, or a voltage-to-current converter, 4) modify the signals from the sensor circuit **97** using calibration data and/or output from the temperature probe circuit **99**, 5) determine a level of an analyte in the interstitial fluid, 6) determine a level of an analyte in the bloodstream based on the sensor signals obtained from interstitial fluid, 7) determine if the level, rate of change, and/or acceleration in the rate of change of the analyte exceeds or meets one or more threshold values, 8) activate an alarm if a threshold value is met or exceeded, 9) evaluate trends in the level of an analyte based on a series of sensor signals, 10) determine a dose of a medication, and 11) reduce noise and/or errors, for example, through signal averaging or comparing readings from multiple working electrodes **58**.

The processing circuit **109** may be simple and perform only one or a small number of these functions or the processing circuit **109** may be more sophisticated and perform all or

most of these functions. The size of the on-skin sensor control unit **44** may increase with the increasing number of functions and complexity of those functions that the processing circuit **109** performs. Many of these functions may not be performed by a processing circuit **109** in the on-skin sensor control unit **44**, but may be performed by another analyzer **152** in the receiver/display units **46**, **48** (see FIG. **22**).

One embodiment of the measurement circuit **96** and/or processing circuit **109** provides as output data, the current flowing between the working electrode **58** and the counter electrode **60**. The measurement circuit **96** and/or processing circuit **109** may also provide as output data a signal from the optional temperature probe **66** which indicates the temperature of the sensor **42**. This signal from the temperature probe **66** may be as simple as a current through the temperature probe **66** or the processing circuit **109** may include a device that determines a resistance of the temperature probe **66** from the signal obtained from the measurement circuit **96** for correlation with the temperature of the sensor **42**. The output data may then be sent to a transmitter **98** that then transmits this data to at least one receiver/display device **46**, **48**.

Returning to the processing circuit **109**, in some embodiments processing circuit **109** is more sophisticated and is capable of determining the analyte concentration or some measure representative of the analyte concentration, such as a current or voltage value. The processing circuit **109** may incorporate the signal of the temperature probe to make a temperature correction in the signal or analyzed data from the working electrode **58**. This may include, for example, scaling the temperature probe measurement and adding or subtracting the scaled measurement to the signal or analyzed data from the working electrode **58**. The processing circuit **109** may also incorporate calibration data which has been received from an external source or has been incorporated into the processing circuit **109**, both of which are described below, to correct the signal or analyzed data from the working electrode **58**. Additionally, the processing circuit **109** may include a correction algorithm for converting interstitial analyte level to blood analyte level. The conversion of interstitial analyte level to blood analyte level is described, for example, in Schmidtke, et al., "Measurement and Modeling of the Transient Difference Between Blood and Subcutaneous Glucose Concentrations in the Rat after Injection of Insulin", Proc. of the Nat'l Acad. of Science, 95, 294-299 (1998) and Quinn, et al., "Kinetics of Glucose Delivery to Subcutaneous Tissue in Rats Measured with 0.3 mm Amperometric Microsensors", Am. J. Physiol., 269 (Endocrinol. Metab. 32), E155-E161 (1995), incorporated herein by reference.

In some embodiments, the data from the processing circuit **109** is analyzed and directed to an alarm system **94** (see FIG. **18**B) to warn the user. In at least some of these embodiments, a transmitter is not used as the sensor control unit performs all of the needed functions including analyzing the data and warning the patient.

However, in many embodiments, the data (e.g., a current signal, a converted voltage or frequency signal, or fully or partially analyzed data) from processing circuit **109** is transmitted to one or more receiver/display units **46**, **48** using a transmitter **98** in the on-skin sensor control unit **44**. The transmitter has an antenna **93**, such as a wire or similar conductor, formed in the housing **45**. The transmitter **98** is typically designed to transmit a signal up to about 2 meters or more, preferably up to about 5 meters or more, and more preferably up to about 10 meters or more, when transmitting to a small receiver/display unit **46**, such as a palm-size, belt-worn receiver. The effective range is longer when transmitting to a unit with a better antenna, such as a bedside receiver. As described in detail below, suitable examples of receiver/display units **46**, **48** include units that can be easily worn or carried or units that can be placed conveniently on, for example, a nightstand when the patient is sleeping.

The transmitter **98** may send a variety of different signals to the receiver/display units **46**, **48**, typically, depending on the sophistication of the processing circuit **109**. For example, the processing circuit **109** may simply provide raw signals, for example, currents from the working electrodes **58**, without any corrections for temperature or calibration, or the processing circuit **109** may provide converted signals which are obtained, for example, using a current-to-voltage converter **131** or **141** (see FIGS. **20**A and **20**B) or a current-to-frequency converter. The raw measurements or converted signals may then be processed by an analyzer **152** (see FIG. **22**) in the receiver/display units **46**, **48** to determine the level of an analyte, optionally using temperature and calibration corrections. In another embodiment, the processing circuit **109** corrects the raw measurements using, for example, temperature and/or calibration information and then the transmitter **98** sends the corrected signal, and optionally, the temperature and/or calibration information, to the receiver/display units **46**, **48**. In yet another embodiment, the processing circuit **109** calculates the analyte level in the interstitial fluid and/or in the blood (based on the interstitial fluid level) and transmits that information to the one or more receiver/display units **46**, **48**, optionally with any of the raw data and/or calibration or temperature information. In a further embodiment, the processing circuit **109** calculates the analyte concentration, but the transmitter **98** transmits only the raw measurements, converted signals, and/or corrected signals.

One potential difficulty that may be experienced with the on-skin sensor control unit **44** is a change in the transmission frequency of the transmitter **98** over time. To overcome this potential difficulty, the transmitter may include optional circuitry that can return the frequency of the transmitter **98** to the desired frequency or frequency band. One example of suitable circuitry is illustrated in FIG. **21** as a block diagram of an open loop modulation system **200**. The open loop modulation system **200** includes a phase detector (PD) **210**, a charge pump (CHGPMP) **212**, a loop filter (LF) **214**, a voltage controlled oscillator (VCO) **216**, and a divide by M circuit (÷M) **218** to form the phase-locked loop (PLL) **220**.

The analyte monitoring device **40** uses an open loop modulation system **200** for RF communication between the transmitter **98** and a receiver of, for example, the one or more receiver/display units **46**, **48**. This open loop modulation system **200** is designed to provide a high reliability RF link between a transmitter and its associated receiver. The system employs frequency modulation (FM), and locks the carrier center frequency using a conventional phase-locked loop (PLL) **220**. In operation, the phase-locked loop **220** is opened prior to the modulation. During the modulation the phase-locked loop **220** remains open for as long as the center frequency of the transmitter is within the receiver's bandwidth. When the transmitter detects that the center frequency is going to move outside of the receiver bandwidth, the receiver is signaled to stand by while the center frequency is captured. Subsequent to the capture, the transmission will resume. This cycle of capturing the center frequency, opening the phase-locked loop **220**, modulation, and recapturing the center frequency will repeat for as many cycles as required.

The loop control **240** detects the lock condition of the phase-locked loop **220** and is responsible for closing and opening the phase-locked loop **220**. The totalizer **250** in conjunction with the loop control **240**, detects the status of the center frequency. The modulation control **230** is responsible

for generating the modulating signal. A transmit amplifier **260** is provided to ensure adequate transmit signal power. The reference frequency is generated from a very stable signal source (not shown), and is divided down by N through the divide by N block (÷N) **270**. Data and control signals are received by the open loop modulation system **200** via the DATA BUS **280**, and the CONTROL BUS **290**.

The operation of the open loop modulation system **200** begins with the phase-locked loop **220** in closed condition. When the lock condition is detected by the loop control **240**, the phase-locked loop **220** is opened and the modulation control **230** begins generating the modulating signal. The totalizer **250** monitors the VCO frequency (divided by M), for programmed intervals. The monitored frequency is compared to a threshold programmed in the totalizer **250**. This threshold corresponds to the 3 dB cut off frequencies of the receiver's intermediate frequency stage. When the monitored frequency approaches the thresholds, the loop control **240** is notified and a stand-by code is transmitted to the receiver and the phase-locked loop **220** is closed.

At this point the receiver is in the wait mode. The loop control **240** in the transmitter closes the phase-locked loop **220**. Then, modulation control **230** is taken off line, the monitored value of the totalizer **250** is reset, and the phase-locked loop **220** is locked. When the loop control **240** detects a lock condition, the loop control **240** opens the phase-locked loop **220**, the modulation control **230** is brought on line and the data transmission to the receiver will resume until the center frequency of the phase-locked loop **220** approaches the threshold values, at which point the cycle of transmitting the stand-by code begins. The ÷N **270** and ÷M **218** blocks set the frequency channel of the transmitter.

Accordingly, the open loop modulation system **200** provides a reliable low power FM data transmission for an analyte monitoring system. The open loop modulation system **200** provides a method of wide band frequency modulation, while the center frequency of the carrier is kept within receiver bandwidth. The effect of parasitic capacitors and inductors pulling the center frequency of the transmitter is corrected by the phase-locked loop **220**. Further, the totalizer **250** and loop control **240** provide a new method of center frequency drift detection. Finally, the open loop modulation system **200** is easily implemented in CMOS process.

The rate at which the transmitter **98** transmits data may be the same rate at which the sensor circuit **97** obtains signals and/or the processing circuit **109** provides data or signals to the transmitter **98**. Alternatively, the transmitter **98** may transmit data at a slower rate. In this case, the transmitter **98** may transmit more than one datapoint in each transmission. Alternatively, only one datapoint may be sent with each data transmission, the remaining data not being transmitted. Typically, data is transmitted to the receiver/display unit **46**, **48** at least every hour, preferably, at least every fifteen minutes, more preferably, at least every five minutes, and most preferably, at least every one minute. However, other data transmission rates may be used. In some embodiments, the processing circuit **109** and/or transmitter **98** are configured to process and/or transmit data at a faster rate when a condition is indicated, for example, a low level or high level of analyte or impending low or high level of analyte. In these embodiments, the accelerated data transmission rate is typically at least every five minutes and preferably at least every minute.

In addition to a transmitter **98**, an optional receiver **110** may be included in the on-skin sensor control unit **44**. In some cases, the transmitter **98** is a transceiver, operating as both a transmitter and a receiver. The receiver **110** may be used to receive calibration data for the sensor **42**. The calibration data may be used by the processing circuit **109** to correct signals from the sensor **42**. This calibration data may be transmitted by the receiver/display unit **46**, **48** or from some other source such as a control unit in a doctor's office. In addition, the optional receiver **110** may be used to receive a signal from the receiver/display units **46**, **48**, as described above, to direct the transmitter **98**, for example, to change frequencies or frequency bands, to activate or deactivate the optional alarm system **94** (as described below), and/or to direct the transmitter **98** to transmit at a higher rate.

Calibration data may be obtained in a variety of ways. For instance, the calibration data may simply be factory-determined calibration measurements which can be input into the on-skin sensor control unit **44** using the receiver **110** or may alternatively be stored in a calibration data storage unit within the on-skin sensor control unit **44** itself (in which case a receiver **110** may not be needed). The calibration data storage unit may be, for example, a readable or readable/writeable memory circuit.

Alternative or additional calibration data may be provided based on tests performed by a doctor or some other professional or by the patient himself. For example, it is common for diabetic individuals to determine their own blood glucose concentration using commercially available testing kits. The results of this test is input into the on-skin sensor control unit **44** either directly, if an appropriate input device (e.g., a keypad, an optical signal receiver, or a port for connection to a keypad or computer) is incorporated in the on-skin sensor control unit **44**, or indirectly by inputting the calibration data into the receiver/display unit **46**, **48** and transmitting the calibration data to the on-skin sensor control unit **44**.

Other methods of independently determining analyte levels may also be used to obtain calibration data. This type of calibration data may supplant or supplement factory-determined calibration values.

In some embodiments of the invention, calibration data may be required at periodic intervals, for example, every eight hours, once a day, or once a week, to confirm that accurate analyte levels are being reported. Calibration may also be required each time a new sensor **42** is implanted or if the sensor exceeds a threshold minimum or maximum value or if the rate of change in the sensor signal exceeds a threshold value. In some cases, it may be necessary to wait a period of time after the implantation of the sensor **42** before calibrating to allow the sensor **42** to achieve equilibrium. In some embodiments, the sensor **42** is calibrated only after it has been inserted. In other embodiments, no calibration of the sensor **42** is needed.

The on-skin sensor control unit **44** and/or receiver/display units **46**, **48** may include an auditory or visual indicator that calibration data is needed, based, for example, on a predetermined periodic time interval between calibrations or on the implantation of a new sensor **42**. The on-skin sensor control unit **44** and/or receiver/display units **46**, **48** may also include an auditory or visual indicator to remind the patient that information, such as analyte levels, reported by the analyte monitoring device **40**, may not be accurate because a calibration of the sensor **42** has not been performed within the predetermined periodic time interval and/or after implantation of a new sensor **42**.

The processing circuit **109** of the on-skin sensor control unit **44** and/or an analyzer **152** of the receiver/display unit **46**, **48** may determine when calibration data is needed and if the calibration data is acceptable. The on-skin sensor control unit **44** may optionally be configured to not allow calibration or to reject a calibration point if, for example, 1) a temperature reading from the temperature probe indicates a temperature

that is not within a predetermined acceptable range (e.g., 30 to 42° C. or 32 to 40° C.) or that is changing rapidly (for example, 0.2° C./minute, 0.5° C./minute, or 0.7° C./minute or greater); 2) two or more working electrodes **58** provide uncalibrated signals that are not within a predetermined range (e.g., within 10% or 20%) of each other; 3) the rate of change of the uncalibrated signal is above a threshold rate (e.g., 0.25 mg/dL per minute or 0.5 mg/dL per minute or greater); 4) the uncalibrated signal exceeds a threshold maximum value (e.g., 5, 10, 20, or 40 nA) or is below a threshold minimum value (e.g., 0.05, 0.2, 0.5, or 1 nA); 5) the calibrated signal exceeds a threshold maximum value (e.g., a signal corresponding to an analyte concentration of 200 mg/dL, 250 mg/dL, or 300 mg/dL) or is below a threshold minimum value (e.g., a signal corresponding to an analyte concentration of 50 mg/dL, 65 mg/dL, or 80 mg/dL); and/or 6) an insufficient amount of time has elapsed since implantation (e.g., 10 minutes or less, 20 minutes or less, or 30 minutes or less).

The processing circuit **109** or an analyzer **152** may also request another calibration point if the values determined using the sensor data before and after the latest calibration disagree by more than a threshold amount, indicating that the calibration may be incorrect or that the sensor characteristics have changed radically between calibrations. This additional calibration point may indicate the source of the difference.

In one embodiment, delaying calibration after the placement and waiting for the placed sensor to stabilize provides accurate sensor data. Indeed, as discussed in further detail below, awaiting a predetermined time period after the sensor **42** placement to perform the initial calibration (i.e., the first calibration after placement of the sensor in a patient) in one embodiment substantially increases the overall accuracy of the data received from the sensor **42** and provides a clinically acceptable degree of sensor accuracy. For example, performing the initial calibration of the positioned sensor **42** after approximately 10 hours from the time of sensor placement in the patient's body fluid (e.g., interstitial fluid) results in increased accuracy in sensor data. Indeed, in certain embodiments by providing approximately 10 hours of sensor stabilization from when the sensor **42** is first placed in the patient's interstitial fluid, the overall data accuracy from the sensor **42** during the period that the patient is wearing the sensor **42** (for example, at least 1 day, e.g., at least 3 days, e.g., at least 5 days, e.g., at least 7 days or more), improves as compared to a control.

FIG. **30** illustrates a Clarke Error Grid Analysis for a system in which the calibration is performed at or very close after the first hour of sensor placement, and FIG. **31** illustrates a Clarke Error grid analysis for a system in which the initial calibration is performed at or very close after 10 hours since the sensor placement. FIG. **32** shows a comparison between the first hour calibration data of FIG. **30** and the 10 hour calibration data of FIG. **31**. FIG. **33** illustrates in tabular form the overall comparison between the data from the 1 hour calibration versus the 10 hour calibration, where The MARD values are mean absolute relative difference (MARD) values, which, as can be seen from FIG. **33**, has decreased from approximately 15.3% to approximately 11.8% between the 1 hour calibration data as compared with the 10 hour calibration data.

In the system described above, the sensor **42** is configured to be worn by the patient and used for a period of about one to about five days or more, e.g., seven days or more, where the sensor calibration is performed at about 10 hour, about 12 hour, about 24 hour and about 72 hour intervals as measured from the initial sensor **42** placement in which the sensor is placed in fluid contact with a patient's analyte-containing fluid, e.g., whole, blood, interstitial fluid, etc. In this manner, by delaying the initial calibration of the sensor **42** to about 10 hours from the sensor **42** placement, the accuracy of the data from the sensor **42** (e.g., analyte levels monitored by the sensor **42**) is increased. In this manner, in one embodiment, a total of four sensor calibration events are performed using, for example, a blood glucose meter. Moreover, in the embodiment discussed above, the sensor **42** is configured to be replaced after about one day or more, e.g., after about 3 days or more, e.g., after about 5 days of use or more, e.g., after about 7 days or more of use, providing for about a 5 day use period, approximately 110 hours of clinically analyte monitoring (where the first 10 hours are reserved for sensor **42** stabilization and subsequent initial calibration).

FIG. **34** illustrates data accuracy from the sensor in the 10 hour calibration embodiment as compared with glucose meter readings over the five day period. Referring to FIG. **34**, the solid line provides the measured glucose value as received from the sensor **42** over the five day period, whereas the triangle legends show the discrete glucose measurements using blood glucose meters at the discrete time intervals as shown in the Figure, while the square legends illustrate the sensor calibration points in the five day period.

FIG. **35** provides a tabular illustration of the change in the daily MARD value over the 5 day period. It can be seen from FIG. **35** and in conjunction with the data shown in FIG. **34**, that the mean absolute relative difference (MARD) value over the five day period progressively decreases, with the number of sensor data ("n" as shown in the table of FIG. **35**) obtained from the sensor **42** increasing over that time period. Indeed, the data shown in FIG. **35** were obtained from 19 patients (with a total of 33 sensors) with type 1 diabetes, and where the reference values of the discrete blood glucose measurements (based on blood drawn from the patient' arm) are obtained from the commercially available blood glucose meter Freestyle® from Abbott Diabetes Care Inc., of Alameda, Calif., the assignee of the present invention.

In one embodiment of the present invention, the glucose sensors provide increased accuracy at low glucose levels. Moreover, the 5 day sensor **42** in one embodiment provides sensor data accuracy that is comparable to or improves upon a 3 day sensor, while requiring approximately 4 calibration measurements over the 5 day period.

In the manner described above, the calibrations may be performed at about 10 hours, about 12 hours, about 24 hours and about 72 hours, with no calibration measurements performed on the 4th and the 5th days during the 5 day period for the sensor **42** use (it is to be understood that the time periods of the calibration events described herein are for exemplary purposes only and are in no way intended to limit the scope of the invention). Moreover, the calibration conditions in one embodiment may include a rate of less than 2 mg/dL per minute, with the glucose level at greater than approximately 60 mg/dL. With the 10 hour initial sensor calibration, the sensor insertion for the 5 day use may be performed during the morning or in the evening without much inconvenience to the patient and to the patient's daily routines. Moreover, this approach also provides a predictable and controlled sensor insertion, calibration and removal time periods for the patients, which is likely to be less intrusive to the patients' daily activities.

By way of examples, the schedule for a 5 day sensor insertion and analyte monitoring may include the following events. In the case of morning sensor insertion, for example, 7 am sensor insertion will require about a 5 pm initial calibration (about a 10 hour calibration), followed by about a 7 pm second calibration measurement (about a 12 hour calibra-

tion). Thereafter, the third calibration at about 24 hours will be at the following morning at about 7 am, and followed by the fourth and final calibration measurement performed at about 7 am of the third day (at about 72 hours). Thereafter, at about 7 am following the fifth day, the sensor is removed and may be replaced with a new sensor.

In the case of a bedtime sensor insertion example, the sensor **42** may be inserted at about 9 pm, to be followed by the initial calibration measurement at about 7 am the following morning (about a 10 hour calibration). Thereafter, the second calibration measurement is obtained at about 9 am (about a 12 hour calibration), followed by the third calibration that evening at about 9 pm (about a 24 hour calibration). The final calibration measurement is obtained at about 9 pm of the subsequent evening (about a 72 hour calibration), and after the five days of usage, the sensor **42** is removed and may be replaced at about 9 pm following day 5 of usage with a new sensor **42**.

Referring back to FIG. **18**A, the on-skin sensor control unit **44** may include an optional data storage unit **102** which may be used to hold data (e.g., measurements from the sensor or processed data) from the processing circuit **109** permanently or, more typically, temporarily. The data storage unit **102** may hold data so that the data can be used by the processing circuit **109** to analyze and/or predict trends in the analyte level, including, for example, the rate and/or acceleration of analyte level increase or decrease. The data storage unit **102** may also or alternatively be used to store data during periods in which a receiver/display unit **46**, **48** is not within range. The data storage unit **102** may also be used to store data when the transmission rate of the data is slower than the acquisition rate of the data. For example, if the data acquisition rate is 10 points/min and the transmission is 2 transmissions/min, then one to five points of data could be sent in each transmission depending on the desired rate for processing datapoints. The data storage unit **102** typically includes a readable/writeable memory storage device and typically also includes the hardware and/or software to write to and/or read the memory storage device.

Referring back to FIG. **18**A, the on-skin sensor control unit **44** may include an optional alarm system **94** that, based on the data from the processing circuit **109**, warns the patient of a potentially detrimental condition of the analyte. For example, if glucose is the analyte, than the on-skin sensor control unit **44** may include an alarm system **94** that warns the patient of conditions such as hypoglycemia, hyperglycemia, impending hypoglycemia, and/or impending hyperglycemia. The alarm system **94** is triggered when the data from the processing circuit **109** reaches or exceeds a threshold value. Examples of threshold values for blood glucose levels are about 60, 70, or 80 mg/dL for hypoglycemia; about 70, 80, or 90 mg/dL for impending hypoglycemia; about 130, 150, 175, 200, 225, 250, or 275 mg/dL for impending hyperglycemia; and about 150, 175, 200, 225, 250, 275, or 300 mg/dL for hyperglycemia. The actual threshold values that are designed into the alarm system **94** may correspond to interstitial fluid glucose concentrations or electrode measurements (e.g., current values or voltage values obtained by conversion of current measurements) that correlate to the above-mentioned blood glucose levels. The analyte monitor device may be configured so that the threshold levels for these or any other conditions may be programmable by the patient and/or a medical professional.

A threshold value is exceeded if the datapoint has a value that is beyond the threshold value in a direction indicating a particular condition. For example, a datapoint which correlates to a glucose level of 200 mg/dL exceeds a threshold value for hyperglycemia of 180 mg/dL, because the datapoint indicates that the patient has entered a hyperglycemic state. As another example, a datapoint which correlates to a glucose level of 65 mg/dL exceeds a threshold value for hypoglycemia of 70 mg/dL because the datapoint indicates that the patient is hypoglycemic as defined by the threshold value. However, a datapoint which correlates to a glucose level of 75 mg/dL would not exceed the same threshold value for hypoglycemia because the datapoint does not indicate that particular condition as defined by the chosen threshold value.

An alarm may also be activated if the sensor readings indicate a value that is beyond a measurement range of the sensor **42**. For glucose, the physiologically relevant measurement range is typically about 50 to 250 mg/dL, preferably about 40-300 mg/dL and ideally 30-400 mg/dL, of glucose in the interstitial fluid.

The alarm system **94** may also, or alternatively, be activated when the rate of change or acceleration of the rate of change in analyte level increase or decrease reaches or exceeds a threshold rate or acceleration. For example, in the case of a subcutaneous glucose monitor, the alarm system might be activated if the rate of change in glucose concentration exceeds a threshold value which might indicate that a hyperglycemic or hypoglycemic condition is likely to occur.

The optional alarm system **94** may be configured to activate when a single data point meets or exceeds a particular threshold value. Alternatively, the alarm may be activated only when a predetermined number of datapoints spanning a predetermined amount of time meet or exceed the threshold value. As another alternative, the alarm may be activated only when the datapoints spanning a predetermined amount of time have an average value which meets or exceeds the threshold value. Each condition that can trigger an alarm may have a different alarm activation condition. In addition, the alarm activation condition may change depending on current conditions (e.g., an indication of impending hyperglycemia may alter the number of datapoints or the amount of time that is tested to determine hyperglycemia).

The alarm system **94** may contain one or more individual alarms. Each of the alarms may be individually activated to indicate one or more conditions of the analyte. The alarms may be, for example, auditory or visual. Other sensory-stimulating alarm systems may be used including alarm systems which heat, cool, vibrate, or produce a mild electrical shock when activated. In some embodiments, the alarms are auditory with a different tone, note, or volume indicating different conditions. For example, a high note might indicate hyperglycemia and a low note might indicate hypoglycemia. Visual alarms may use a difference in color, brightness, or position on the on-skin sensor control device **44** to indicate different conditions. In some embodiments, an auditory alarm system is configured so that the volume of the alarm increases over time until the alarm is deactivated.

In some embodiments, the alarm may be automatically deactivated after a predetermined time period. In other embodiments, the alarm may be configured to deactivate when the data no longer indicate that the condition which triggered the alarm exists. In these embodiments, the alarm may be deactivated when a single data point indicates that the condition no longer exists or, alternatively, the alarm may be deactivated only after a predetermined number of datapoints or an average of datapoints obtained over a given period of time indicate that the condition no longer exists.

In some embodiments, the alarm may be deactivated manually by the patient or another person in addition to or as an alternative to automatic deactivation. In these embodiments, a deactivation switch **111** is provided which when activated

turns off the alarm. The switch **111** may be operatively engaged (or disengaged depending on the configuration of the switch) by, for example, operating an actuator on the on-skin sensor control unit **44** or the receiver/display unit **46**, **48**. In some cases, an actuator may be provided on two or more units **44**, **46**, **48**, any of which may be actuated to deactivate the alarm. If the switch **111** and or actuator is provided on the receiver/display unit **46**, **48** then a signal may be transmitted from the receiver/display unit **46**, **48** to the receiver **110** on the on-skin sensor control unit **44** to deactivate the alarm.

A variety of switches **111** may be used including, for example, a mechanical switch, a reed switch, a Hall effect switch, a Gigantic Magnetic Ratio (GMR) switch (the resistance of the GMR switch is magnetic field dependent) and the like. Preferably, the actuator used to operatively engage (or disengage) the switch is placed on the on-skin sensor control unit **44** and configured so that no water can flow around the button and into the housing. One example of such a button is a flexible conducting strip that is completely covered by a flexible polymeric or plastic coating integral to the housing. In an open position the flexible conducting strip is bowed and bulges away from the housing. When depressed by the patient or another person, the flexible conducting strip is pushed directly toward a metal contact and completes the circuit to shut off the alarm.

For a reed or GMR switch, a piece of magnetic material, such as a permanent magnet or an electromagnet, in a flexible actuator that is bowed or bulges away from the housing **45** and the reed or GMR switch is used. The reed or GMR switch is activated (to deactivate the alarm) by depressing the flexible actuator bringing the magnetic material closer to the switch and causing an increase in the magnetic field within the switch.

In some embodiments of the invention, the analyte monitoring device **40** includes only an on-skin control unit **44** and a sensor **42**. In these embodiments, the processing circuit **109** of the on-skin sensor control unit **44** is able to determine a level of the analyte and activate an alarm system **94** if the analyte level exceeds a threshold. The on-skin control unit **44**, in these embodiments, has an alarm system **94** and may also include a display, such as those discussed below with respect to the receiver/display units **46**, **48**. Preferably, the display is an LCD or LED display. The on-skin control unit **44** may not have a transmitter, unless, for example, it is desirable to transmit data, for example, to a control unit in a doctor's office.

The on-skin sensor control unit **44** may also include a reference voltage generator **101** to provide an absolute voltage or current for use in comparison to voltages or currents obtained from or used with the sensor **42**. An example of a suitable reference voltage generator is a band-gap reference voltage generator that uses, for example, a semiconductor material with a known band-gap. Preferably, the band-gap is temperature insensitive over the range of temperatures that the semiconductor material will experience during operation. Suitable semiconductor materials includes gallium, silicon and silicates.

A bias current generator **105** may be provided to correctly bias solid-state electronic components. An oscillator **107** may be provided to produce a clock signal that is typically used with digital circuitry.

The on-skin sensor control unit **44** may also include a watchdog circuit **103** that tests the circuitry, particularly, any digital circuitry in the control unit **44** to determine if the circuitry is operating correctly. Non-limiting examples of watchdog circuit operations include: a) generation of a random number by the watchdog circuit, storage of the number in a memory location, writing the number to a register in the watchdog circuit, and recall of the number to compare for equality; b) checking the output of an analog circuit to determine if the output exceeds a predetermined dynamic range; c) checking the output of a timing circuit for a signal at an expected pulse interval. Other examples of functions of a watchdog circuit are known in the art. If the watchdog circuit detects an error that watchdog circuit may activate an alarm and/or shut down the device.

Receiver/Display Unit

One or more receiver/display units **46**, **48** may be provided with the analyte monitoring device **40** for easy access to the data generated by the sensor **42** and may, in some embodiments, process the signals from the on-skin sensor control unit **44** to determine the concentration or level of analyte in the subcutaneous tissue. Small receiver/display units **46** may be carried by the patient. These units **46** may be palm-sized and/or may be adapted to fit on a belt or within a bag or purse that the patient carries. One embodiment of the small receiver/display unit **46** has the appearance of a pager, for example, so that the user is not identified as a person using a medical device. Such receiver/display units may optionally have one-way or two-way paging capabilities.

Large receiver/display units **48** may also be used. These larger units **48** may be designed to sit on a shelf or nightstand. The large receiver/display unit **48** may be used by parents to monitor their children while they sleep or to awaken patients during the night. In addition, the large receiver/display unit **48** may include a lamp, clock, or radio for convenience and/or for activation as an alarm. One or both types of receiver/display units **46**, **48** may be used.

The receiver/display units **46**, **48**, as illustrated in block form at FIG. **22**, typically include a receiver **150** to receive data from the on-skin sensor control unit **44**, an analyzer **152** to evaluate the data, a display **154** to provide information to the patient, and an alarm system **156** to warn the patient when a condition arises. The receiver/display units **46**, **48** may also optionally include a data storage device **158**, a transmitter **160**, and/or an input device **162**. The receiver/display units **46**, **48** may also include other components (not shown), such as a power supply (e.g., a battery and/or a power supply that can receive power from a wall outlet), a watchdog circuit, a bias current generator, and an oscillator. These additional components are similar to those described above for the on-skin sensor control unit **44**.

In one embodiment, a receiver/display unit **48** is a bedside unit for use by a patient at home. The bedside unit includes a receiver and one or more optional items, including, for example, a clock, a lamp, an auditory alarm, a telephone connection, and a radio. The bedside unit also has a display, preferably, with large numbers and/or letters that can be read across a room. The unit may be operable by plugging into an outlet and may optionally have a battery as backup. Typically, the bedside unit has a better antenna than a small palm-size unit, so the bedside unit's reception range is longer.

When an alarm is indicated, the bedside unit may activate, for example, the auditory alarm, the radio, the lamp, and/or initiate a telephone call. The alarm may be more intense than the alarm of a small palm-size unit to, for example, awaken or stimulate a patient who may be asleep, lethargic, or confused. Moreover, a loud alarm may alert a parent monitoring a diabetic child at night.

The bedside unit may have its own data analyzer and data storage. The data may be communicated from the on-skin sensor unit or another receiver/display unit, such as a palm-size or small receiver/display unit. Thus, at least one unit has

all the relevant data so that the data can be downloaded and analyzed without significant gaps.

Optionally, the beside unit has an interface or cradle into which a small receiver/display unit may be placed. The bedside unit may be capable of utilizing the data storage and analysis capabilities of the small receiver/display unit and/or receive data from the small receiver/display unit in this position. The bedside unit may also be capable of recharging a battery of the small receiver/display unit.

The receiver **150** typically is formed using known receiver and antenna circuitry and is often tuned or tunable to the frequency or frequency band of the transmitter **98** in the on-skin sensor control unit **44**. Typically, the receiver **150** is capable of receiving signals from a distance greater than the transmitting distance of the transmitter **98**. The small receiver/display unit **46** can typically receive a signal from an on-skin sensor control unit **44** that is up to 2 meters, preferably up to 5 meters, and more preferably up to 10 meters or more, away. A large receiver/display unit **48**, such as a bedside unit, can typically receive a receive a signal from an on-skin sensor control unit **44** that is up to 5 meters distant, preferably up to 10 meters distant, and more preferably up to 20 meters distant or more.

In one embodiment, a repeater unit (not shown) is used to boost a signal from an on-skin sensor control unit **44** so that the signal can be received by a receiver/display unit **46**, **48** that may be distant from the on-skin sensor control unit **44**. The repeater unit is typically independent of the on-skin sensor control unit **44**, but, in some cases, the repeater unit may be configured to attach to the on-skin sensor control unit **44**. Typically, the repeater unit includes a receiver for receiving the signals from the on-skin sensor control unit **44** and a transmitter for transmitting the received signals. Often the transmitter of the repeater unit is more powerful than the transmitter of the on-skin sensor control unit, although this is not necessary. The repeater unit may be used, for example, in a child's bedroom for transmitting a signal from an on-skin sensor control unit on the child to a receiver/display unit in the parent's bedroom for monitoring the child's analyte levels. Another exemplary use is in a hospital with a display/receiver unit at a nurse's station for monitoring on-skin sensor control unit(s) of patients.

The presence of other devices, including other on-skin sensor control units, may create noise or interference within the frequency band of the transmitter **98**. This may result in the generation of false data. To overcome this potential difficulty, the transmitter **98** may also transmit a code to indicate, for example, the beginning of a transmission and/or to identify, preferably using a unique identification code, the particular on-skin sensor control unit **44** in the event that there is more than one on-skin sensor control unit **44** or other transmission source within range of the receiver/display unit **46**, **48**. The provision of an identification code with the data may reduce the likelihood that the receiver/display unit **46**, **48** intercepts and interprets signals from other transmission sources, as well as preventing "crosstalk" with different on-skin sensor control units **44**. The identification code may be provided as a factory-set code stored in the sensor control unit **44**. Alternatively, the identification code may be randomly generated by an appropriate circuit in the sensor control unit **44** or the receiver/display unit **46**, **48** (and transmitted to the sensor control unit **44**) or the identification code may be selected by the patient and communicated to the sensor control unit **44** via a transmitter or an input device coupled to the sensor control unit **44**.

Other methods may be used to eliminate "crosstalk" and to identify signals from the appropriate on-skin sensor control unit **44**. In some embodiments, the transmitter **98** may use encryption techniques to encrypt the datastream from the transmitter **98**. The receiver/display unit **46**, **48** contains the key to decipher the encrypted data signal. The receiver/display unit **46**, **48** then determines when false signals or "crosstalk" signals are received by evaluation of the signal after it has been deciphered. For example, the analyzer **152** in the one or more receiver/display units **46**, **48** compares the data, such as current measurements or analyte levels, with expected measurements (e.g., an expected range of measurements corresponding to physiologically relevant analyte levels). Alternatively, an analyzer in the receiver/display units **46**, **48** searches for an identification code in the decrypted data signal.

Another method to eliminate "crosstalk", which is typically used in conjunction with the identification code or encryption scheme, includes providing an optional mechanism in the on-skin sensor control unit **44** for changing transmission frequency or frequency bands upon determination that there is "crosstalk". This mechanism for changing the transmission frequency or frequency band may be initiated by the receiver/display unit automatically, upon detection of the possibility of cross-talk or interference, and/or by a patient manually. For automatic initiation, the receiver/display unit **46**, **48** transmits a signal to the optional receiver **110** on the on-skin sensor control unit **44** to direct the transmitter **98** of the on-skin sensor control unit **44** to change frequency or frequency band.

Manual initiation of the change in frequency or frequency band may be accomplished using, for example, an actuator (not shown) on the receiver/display unit **46**, **48** and/or on the on-skin sensor control unit **44** which a patient operates to direct the transmitter **98** to change frequency or frequency band. The operation of a manually initiated change in transmission frequency or frequency band may include prompting the patient to initiate the change in frequency or frequency band by an audio or visual signal from the receiver/display unit **46**, **48** and/or on-skin sensor control unit **44**.

Returning to the receiver **150**, the data received by the receiver **150** is then sent to an analyzer **152**. The analyzer **152** may have a variety of functions, similar to the processor circuit **109** of the on-skin sensor control unit **44**, including 1) modifying the signals from the sensor **42** using calibration data and/or measurements from the temperature probe **66**, 2) determining a level of an analyte in the interstitial fluid, 3) determining a level of an analyte in the bloodstream based on the sensor measurements in the interstitial fluid, 4) determining if the level, rate of change, and/or acceleration in the rate of change of the analyte exceeds or meets one or more threshold values, 5) activating an alarm system **156** and/or **94** if a threshold value is met or exceeded, 6) evaluating trends in the level of an analyte based on a series of sensor signals, 7) determine a dose of a medication, and 8) reduce noise or error contributions (e.g., through signal averaging or comparing readings from multiple electrodes). The analyzer **152** may be simple and perform only one or a small number of these functions or the analyzer **152** may perform all or most of these functions.

The output from the analyzer **152** is typically provided to a display **154**. A variety of displays **154** may be used including cathode ray tube displays (particularly for larger units), LED displays, or LCD displays. The display **154** may be monochromatic (e.g., black and white) or polychromatic (i.e., having a range of colors). The display **154** may contain symbols or other indicators that are activated under certain conditions (e.g., a particular symbol may become visible on the display when a condition, such as hyperglycemia, is indicated by

signals from the sensor **42**). The display **154** may also contain more complex structures, such as LCD or LED alphanumeric structures, portions of which can be activated to produce a letter, number, or symbol. For example, the display **154** may include region **164** to display numerically the level of the analyte, as illustrated in FIG. **23**. In one embodiment, the display **154** also provides a message to the patient to direct the patient in an action. Such messages may include, for example, "Eat Sugar", if the patient is hypoglycemic, or "Take Insulin", if the patient is hyperglycemic.

One example of a receiver/display unit **46**, **48** is illustrated in FIG. **23**. The display **154** of this particular receiver/display unit **46**, **48** includes a portion **164** which displays the level of the analyte, for example, the blood glucose concentration, as determined by the processing circuit **109** and/or the analyzer **152** using signals from the sensor **42**. The display also includes various indicators **166** which may be activated under certain conditions. For example, the indicator **168** of a glucose monitoring device may be activated if the patient is hyperglycemic. Other indicators may be activated in the cases of hypoglycemia (**170**), impending hyperglycemia (**172**), impending hypoglycemia (**174**), a malfunction, an error condition, or when a calibration sample is needed (**176**). In some embodiments, color coded indicators may be used. Alternatively, the portion **164** which displays the blood glucose concentration may also include a composite indicator **180** (see FIG. **24**), portions of which may be appropriately activated to indicate any of the conditions described above.

The display **154** may also be capable of displaying a graph **178** of the analyte level over a period of time, as illustrated in FIG. **24**. Examples of other graphs that may be useful include graphs of the rate of change or acceleration in the rate of change of the analyte level over time. In some embodiments, the receiver/display unit is configured so that the patient may choose the particular display (e.g., blood glucose concentration or graph of concentration versus time) that the patient wishes to view. The patient may choose the desired display mode by pushing a button or the like, for example, on an optional input device **162**.

The receiver/display units **46**, **48** also typically include an alarm system **156**. The options for configuration of the alarm system **156** are similar to those for the alarm system **94** of the on-skin sensor control unit **44**. For example, if glucose is the analyte, than the on-skin sensor control unit **44** may include an alarm system **156** that warns the patient of conditions such as hypoglycemia, hyperglycemia, impending hypoglycemia, and/or impending hyperglycemia. The alarm system **156** is triggered when the data from the analyzer **152** reaches or exceeds a threshold value. The threshold values may correspond to interstitial fluid glucose concentrations or sensor signals (e.g., current or converted voltage values) which correlate to the above-mentioned blood glucose levels.

The alarm system **156** may also, or alternatively, be activated when the rate or acceleration of an increase or decrease in analyte level reaches or exceeds a threshold value. For example, in the case of a subcutaneous glucose monitor, the alarm system **156** might be activated if the rate of change in glucose concentration exceeds a threshold value which might indicate that a hyperglycemic or hypoglycemic condition is likely to occur.

The alarm system **156** may be configured to activate when a single data point meets or exceeds a particular threshold value. Alternatively, the alarm may be activated only when a predetermined number of datapoints spanning a predetermined amount of time meet or exceed the threshold value. As another alternative, the alarm may be activated only when the datapoints spanning a predetermined amount of time have an average value which meets or exceeds the threshold value. Each condition that can trigger an alarm may have a different alarm activation condition. In addition, the alarm activation condition may change depending on current conditions (e.g., an indication of impending hyperglycemia may alter the number of datapoints or the amount of time that is tested to determine hyperglycemia).

The alarm system **156** may contain one or more individual alarms. Each of the alarms may be individually activated to indicate one or more conditions of the analyte. The alarms may be, for example, auditory or visual. Other sensory-stimulating alarm systems by be used including alarm systems **156** that direct the on-skin sensor control unit **44** to heat, cool, vibrate, or produce a mild electrical shock. In some embodiments, the alarms are auditory with a different tone, note, or volume indicating different conditions. For example, a high note might indicate hyperglycemia and a low note might indicate hypoglycemia. Visual alarms may also use a difference in color or brightness to indicate different conditions. In some embodiments, an auditory alarm system might be configured so that the volume of the alarm increases over time until the alarm is deactivated.

In some embodiments, the alarms may be automatically deactivated after a predetermined time period. In other embodiments, the alarms may be configured to deactivate when the data no longer indicate that the condition which triggered the alarm exists. In these embodiments, the alarms may be deactivated when a single data point indicates that the condition no longer exists or, alternatively, the alarm may be deactivated only after a predetermined number of datapoints or an average of datapoints obtained over a given period of time indicate that the condition no longer exists.

In yet other embodiments, the alarm may be deactivated manually by the patient or another person in addition to or as an alternative to automatic deactivation. In these embodiments, a switch is provided which when activated turns off the alarm. The switch may be operatively engaged (or disengaged depending on the configuration of the switch) by, for example, pushing a button on the receiver/display unit **46**, **48**. One configuration of the alarm system **156** has automatic deactivation after a period of time for alarms that indicate an impending condition (e.g., impending hypoglycemia or hyperglycemia) and manual deactivation of alarms which indicate a current condition (e.g., hypoglycemia or hyperglycemia).

In one embodiment, the alarm systems **94**, **156** of the on-skin sensor control unit **44** and the receiver/display units **46**, **48**, respectively, may also include a progressive alarm or alert features which allows the patient to set or program the on-skin sensor control unit **44** and/or the receiver/display units **46**, **48** to provide a series of advance notifications to the patient as the occurrence of an anticipated event approaches. For example, it may be desirable to receive a series of alerts (e.g., audio, vibratory, a combination of audio and vibratory, and/or which either increases or decreases in volume or strength of vibration or otherwise increases in intensity) as the patient's monitored analyte level approaches a predetermined level.

In such a case, the on-skin sensor control unit **44** and/or the receiver/display units **46**, **48** may be configured to generate and output a first alert at a predetermined time when the patient's monitored analyte level is closer to the predetermined level. Thereafter, a second alert may be generated and output after the occurrence of the first alert as the monitored analyte level is closer to the predetermined level than the level when the first alert was output. This may be repeated with third, fourth . . . alerts. In this manner, the patient may be

provided with a sequence of progressive alerts based on one or more predetermined event so that the patient is provided with a repeated notification of the anticipated predetermined event.

In one embodiment, the sequence or series of alerts or alarms may be configured to increase in output volume (or the strength of the vibration in the case of the vibratory alert) as the predetermined event approaches, with the sequence or series of alerts or alarms evenly temporally spaced apart in time. Alternatively, the sequence or series of alerts or alarms may be temporally spaced closer together as the occurrence of the predetermined event is closer in time.

In one embodiment, the occurrence of the predetermined event may include one or more of a monitored analyte level exceeding an upper threshold level, or falling below a lower threshold level, a hyperglycemic state, an impending hyperglycemic state, a hypoglycemic state an impending hypoglycemic state, a low drug dosage level indication, a low battery level indication, or a reminder to take a course of action such as calibration, glucose testing (for example, using a blood glucose strip meter), sensor replacement, infusion set occlusion verification, or the like.

The receiver/display units **46**, **48** may also include a number of optional items. One item is a data storage unit **158**. The data storage unit **158** may be desirable to store data for use if the analyzer **152** is configured to determine trends in the analyte level. The data storage unit **158** may also be useful to store data that may be downloaded to another receiver/display unit, such as a large display unit **48**. Alternatively, the data may be downloaded to a computer or other data storage device in a patient's home, at a doctor's office, etc. for evaluation of trends in analyte levels. A port (not shown) may be provided on the receiver/display unit **46**, **48** through which the stored data may be transferred or the data may be transferred using an optional transmitter **160**. The data storage unit **158** may also be activated to store data when a directed by the patient via, for example, the optional input device **162**. The data storage unit **158** may also be configured to store data upon occurrence of a particular event, such as a hyperglycemic or hypoglycemic episode, exercise, eating, etc. The storage unit **158** may also store event markers with the data of the particular event. These event markers may be generated either automatically by the display/receiver unit **46**, **48** or through input by the patient.

The receiver/display unit **46**, **48** may also include an optional transmitter **160** which can be used to transmit 1) calibration information, 2) a signal to direct the transmitter **98** of the on-skin sensor control unit **44** to change transmission frequency or frequency bands, and/or 3) a signal to activate an alarm system **94** on the on-skin sensor control unit **44**, all of which are described above. The transmitter **160** typically operates in a different frequency band than the transmitter **98** of the on-skin sensor control unit **44** to avoid cross-talk between the transmitters **98**, **160**. Methods may be used to reduce cross-talk and the reception of false signals, as described above in connection with the transmitter **98** of the on-skin sensor control unit **44**. In some embodiments, the transmitter **160** is only used to transmit signals to the sensor control unit **44** and has a range of less than one foot, and preferably less than six inches. This then requires the patient or another person to hold the receiver/display unit **46** near the sensor control unit **44** during transmission of data, for example, during the transmission of calibration information. Transmissions may also be performed using methods other than RF transmission, including optical or wire transmission.

In addition, in some embodiments of the invention, the transmitter **160** may be configured to transmit data to another receiver/display unit **46**, **48** or some other receiver. For example, a small receiver/display unit **46** may transmit data to a large receiver/display unit **48**, as illustrated in FIG. **1**. As another example, a receiver/display unit **46**, **48** may transmit data to a computer in the patient's home or at a doctor's office. Moreover, the transmitter **160**, or a separate transmitter, may direct a transmission to another unit, or to a telephone or other communications device that alerts a doctor, or other individual, when an alarm is activated and/or if, after a predetermined time period, an activated alarm has not been deactivated, suggesting that the patient may require assistance. In some embodiments, the receiver/display unit is capable of one-way or two-way paging and/or is coupled to a telephone line to send and/or receive messages from another, such as a health professional monitoring the patient.

Another optional component for the receiver/display unit **46**, **48** is an input device **162**, such as a keypad or keyboard. The input device **162** may allow numeric or alphanumeric input. The input device **162** may also include buttons, keys, or the like which initiate functions of and/or provide input to the analyte monitoring device **40**. Such functions may include initiating a data transfer, manually changing the transmission frequency or frequency band of the transmitter **98**, deactivating an alarm system **94**, **156**, inputting calibration data, and/or indicating events to activate storage of data representative of the event.

Another embodiment of the input device **162** is a touch screen display. The touch screen display may be incorporated into the display **154** or may be a separate display. The touch screen display is activated when the patient touches the screen at a position indicated by a "soft button" which corresponds to a desired function. Touch screen displays are well known.

In addition, the analyte monitoring device **40** may include password protection to prevent the unauthorized transmission of data to a terminal or the unauthorized changing of settings for the device **40**. A patient may be prompted by the display **154** to input the password using the input device **162** whenever a password-protected function is initiated.

Another function that may be activated by the input device **162** is a deactivation mode. The deactivation mode may indicate that the receiver/display unit **46**, **48** should no longer display a portion or all of the data. In some embodiments, activation of the deactivation mode may even deactivate the alarm systems **94**, **156**. Preferably, the patient is prompted to confirm this particular action. During the deactivation mode, the processing circuit **109** and/or analyzer **152** may stop processing data or they may continue to process data and not report it for display and may optionally store the data for later retrieval.

Alternatively, a sleep mode may be entered if the input device **162** has not been activated for a predetermined period of time. This period of time may be adjustable by the patient or another individual. In this sleep mode, the processing circuit **109** and/or analyzer **152** typically continue to obtain measurements and process data, however, the display is not activated. The sleep mode may be deactivated by actions, such as activating the input device **162**. The current analyte reading or other desired information may then be displayed.

In one embodiment, a receiver/display unit **46** initiates an audible and/or visual alarm when the unit **46** has not received a transmission from the on-skin sensor control unit within a predetermined amount of time. The alarm typically continues until the patient responds and/or a transmission is received. This can, for example, remind a patient if the receiver/display unit **46** is inadvertently left behind.

In another embodiment, the receiver/display unit **46**, **48** is integrated with a calibration unit (see for example FIGS.

36A-D). For example, the receiver/display unit **46**, **48** may, for example, include a conventional blood glucose monitor. Another useful calibration device utilizing electrochemical detection of analyte concentration is described, for example, in U.S. patent application Ser. No. 08/795,767; in U.S. Pat. Nos. 6,143,164; 6,338,790; 6,299,757; 6,591,125; 6,616,819; 6,071,391; 6,749,740; 6,736,671; 6,736,957; 7,418,285; and in U.S. Published Patent Application Nos. 2006/0091006; 2008/0267823; 2008/0066305, now U.S. Pat. No. 7,895,740; 2008/0148873, now U.S. Pat. No. 7,802,467; 2007/0068807, now U.S. Pat. No. 7,846,311; 2007/0199818, now U.S. Pat. No. 7,811,430; 2007/0227911 now U.S. Pat. No. 7,887,682; 2007/0108048, now U.S. Pat. No. 7,918,975, the disclosures of which are incorporated herein by reference.

Other devices may be used for calibration including those that operate using, for example, electrochemical and colorimetric blood glucose assays, assays of interstitial or dermal fluid, and/or non-invasive optical assays. In one aspect, when calibration of the transcutaneously or subcutaneously implanted sensor **42** is needed, the patient uses the integrated in vitro monitor to generate a reading. The reading may then, for example, be automatically used by the receiver/display unit **46**, **48** to calibrate the sensor **42**.

For example, calibration and/or validation of an in vivo sensor system may include obtaining one or more blood glucose measurement values (also referred to as reference measurements or calibration data, and the like) using a blood glucose monitor integrated with the housing of the receiver/display unit **46**, **48** (or otherwise coupled thereto), and comparing or correlating one or more of the obtained one or more blood glucose measurement values to one or more in vivo signals obtained from the in vivo sensor system. The compared or correlated in vitro blood glucose value and in vivo signal may be used in an algorithm or routine executed, for example, by a microprocessor or similar computing device or component of the receiver/display unit **46**, **48** to calibrate in vivo sensor signals either substantially in real time, and/or retrospectively and/or prospectively. Accordingly, the in vivo system, e.g., receiver/display unit **46**, **48**, or the like, may include programming to execute the calibration of sensor data using reference data such as reference data obtained from an integrated calibration unit.

As described herein, validation and/or confirmation (e.g., a user affirmative assertion) of in vivo sensor signal data (calibrated and/or uncalibrated signal) and/or in vitro blood glucose measurement data and/or data or signals that may include both as individual data or as a result obtained by using one or both, may be required before any of the above is accepted or performed, or calibration is accepted or performed, where validation includes, but is not limited to, confirmation or verification of a rate of change or fluctuation of a parameter such as glucose to be within a predetermined range or acceptable limit, determination of the parameter, such as glucose values, to be within predetermined analyte ranges, determination of time related parameters (for example, based on the sample time of the in vivo sensor data as compared to the time frame of obtaining the reference measurement to be within a certain acceptable time window), analysis of one or more in vivo sensor data related standard deviations or characteristics, absolute values associated with the data, probabilities of signal artifacts, noise contribution in the signal, signal stability, and the like.

Calibration and validation protocols for the calibration and validation of in vivo continuous analyte systems are described herein, and in e.g., U.S. Pat. Nos. 6,284,478; 7,299,082; and U.S. patent application Ser. No. 11/365,340, now U.S. Pat. No. 7,885,698; Ser. No. 11/537,991, now U.S. Pat. No. 7,618,369; Ser. Nos. 11/618,706; 12/242,823, now U.S. Pat. No. 8,219,173; Ser. No. 12/363,712, now U.S. Pat. No. 8,346,335, the disclosures of which are herein incorporated by reference.

In certain embodiments, a calibration unit, e.g., a blood glucose monitor that determines glucose concentration by way of an in vitro process of applying a biological fluid sample to a glucose test strip that is entirely ex vivo and determining the concentration of glucose in the sample, employed with receiver/display unit **46**, **48**, including integrated therewith or otherwise coupled thereto (e.g., wired to and/or wirelessly coupled) may be configured as an automatic turn on monitor. The in vitro blood glucose monitor used with the in vivo analyte system may be configured or programmed to revive or wake up, or otherwise initiate and/or activate from an inactive mode including a complete turn off mode and sleep mode, upon contact with an in vitro analyte test strip to cause the in vitro monitor to initiate or activate a process or routine associated with the auto turn on monitor upon contact with the test strip such as waking up the monitor, for example, activating the monitor in the absence of any separate physical manipulation of the monitor by the user other than insertion of an in vitro test strip, such as flipping, sliding, or otherwise physically manipulating a switch or activator to transition the monitor into an active mode.

An auto turn on in vitro monitor integrated with an in vivo system may be capable of recognizing contact with an in vitro test strip. The recognition may initiate one or more functions of the integrated auto turn on in vitro monitor. The recognition of an in vitro analyte test strip by the integrated auto turn on in vitro monitor may be accomplished mechanically. For example, when an in vitro test strip is inserted into a port of an auto turn on in vitro monitor, the strip may open and/or close electronic circuits in the monitor indicating the insertion of an in vitro analyte test strip. Only in vitro test strips that meet the physical requirements will activate the monitor. In addition to or instead of mechanical coupling, the recognition of the in vitro test strip may also be accomplished electrically. For example, the integrated auto turn on in vitro monitor may detect an electronic signal (such as electrical continuity) from the test strip and activate the unit for performing the assay for analyte.

An in vitro test strip may include an auto turn on feature to cause the initiation of the auto turn on in vitro monitor. An auto turn on feature of an in vitro test strip may be in the form of a conducting material, such as one or more electrodes. Conducting material may be in the form of a conductive pattern, strip, or the like, in or on an in vitro analyte test strip, which conductive material contacts electrical contacts of an in vitro auto turn on monitor when operatively contacted thereto, e.g., upon insertion of the in vitro analyte test strip into a port of the monitor. In certain embodiments, a wake-up bar (meter turn on bar, insertion monitor stripe, etc.) disposed on or in a test strip may be patterned, or the like, to differentiate strips, e.g., different calibration information, different analyte, etc., of different strips. A reporting module coupled to the auto turn on in vitro monitor may notify (e.g., audio and/or visual) when proper insertion of the in vitro analyte test strip into a blood glucose meter has occurred.

An auto turn on feature of a test strip may include a conductive stripe extending across some or all of an exterior surface of an in vitro analyte test strip, for example, substantially from a first side edge to a second side edge, with one or more contacts for connection to a meter. It is understood that in alternate embodiments of the insertion monitor, the stripe need not extend to both side edges. Conductive material may include two or more electrical contacts for connection to an

auto turn on monitor. The two or more contacts may be electrically connected to each other by a material, such as a conductive ink.

An auto turn on feature of an in vitro test strip may encode information regarding the in vitro analyte test strip. The encoded information may be, for example, the test time needed for accurate analyte concentration analysis, the expiration date of the test strip, one or more correction factors, such as for environmental temperature and/or pressure and/or manufacturing, selection of the analyte to be analyzed (e.g., glucose, ketone bodies, lactate), and the like. An auto turn on feature may encode calibration information for the in vitro analyte test strip. Encoded information may then be read and processed by a coupled auto turn on monitor when contacted with the test strip so that the monitor may use the information in the execution of tasks such as analyte concentration determination.

Additional details regarding auto turn on in vitro test strips and monitors are described, for example, in U.S. Patent Application Publication Nos. 2006/0091006; 2004/0118704; 2009/0011449, now U.S. Pat. No. 8,236,166; and 2008/0267823, U.S. Pat. Nos. 6,377,894; 4,714,874; 5,856,195; 6,616,819; 6,773,671; 7,418,285, and U.S. application Ser. No. 11/461,725, now U.S. Pat. No. 7,866,026, the disclosures of which are herein incorporated by reference.

FIGS. **36**A-D show an embodiment of an integrated auto turn on in vitro monitoring system integrated with an in vivo analyte system. In vivo continuous analyte monitoring system **440** includes a sensor control unit **444** positioned in a sensor control unit mounting unit **477**, and an in vivo analyte sensor **442** in electrical contact with sensor control unit **444**, either directly or via optional electrical contacts on the mounting unit. In vivo system is analogous to the in vivo systems described herein. In certain embodiments, the in vivo system is also an auto turn on system in that the in vivo sensor causes the sensor control unit and/or receiver display unit to turn on, e.g., as described in U.S. Patent Application Publication No. 2008/0281179 the disclosure of which is incorporated herein by reference. In such embodiments, both the in vivo analyte sensor and the in vitro test strip are configured to activate the same or different aspects of the integrated system.

Returning to the figures, in vivo continuous analyte monitoring system **440** also includes a receiver/display unit **446**, **448** that is analogous to receiver/display unit **46**/**48** described herein, and which includes an auto turn on blood glucose monitor **510**, in this embodiment the auto turn on blood glucose monitor is integrated with receiver/display unit **446**, **448**. Blood glucose monitor **510** includes programming to automatically wake up or activate upon contact with an in vitro test strip and provide blood glucose measurement data by determining the presence and/or concentration of analyte, e.g., glucose, in a sample of biological fluid applied to the in vitro test strip when the test strip is in contact with the monitor. In the embodiment of FIGS. **36**A-D, blood glucose monitor **510** includes an in vitro analyte test strip port **512** integrated with the housing **450** of receiver/display unit **446**, **448** to receive an in vitro analyte test strip **600** (see FIGS. **36**C-D). Either before or after an in vitro analyte test strip **600** is received by port **512**, a biological fluid sample may be applied to the in vitro test strip, and integrated monitor **510** of receiver/display unit **446**, **448** accurately determines the concentration of glucose from the sample. Results of the in vitro analyte test may be reported to the user, e.g., by the visual display of the receiver/display unit **446**/**448** or otherwise.

As seen for example in FIG. **36**C, in vitro analyte test strip **600** includes a monitor turn on feature **630** to turn on monitor **510** upon contact with strip **600**. In this embodiment, the auto turn on feature may include a stripe of conductive material positioned on an exterior surface of test strip **600**. Auto turn on feature **630** is configured and arranged to close an electrical circuit when in vitro analyte test strip **600** is properly inserted into auto turn on analyte test monitor **510** connector as shown in FIG. **36**D. Closure initiates certain monitor functions as described herein, such as turning on the blood glucose monitor, etc.

FIG. **37** is a simplified block diagram of the receiver/display unit **446**/**448** shown in FIGS. **36**A-**36**D in accordance with one aspect of the present disclosure. Referring to the FIG. **37**, as shown, in one aspect, the receiver/display unit **446**/**448** includes a test strip interface **3710** including a strip port (not shown) to receive an in vitro analyte test strip with an analysis sample (for example, blood sample) thereon. The test strip interface **3710** is operatively coupled to the processing unit **3720** to send or receive signals or data associated with the operation of the test strip interface **3710** including, for example, one or more signals detected from the test strip. As further shown in FIG. **37**, an input/output unit **3730** in one embodiment is operatively coupled to the processing unit **3720**, and configured as, for example, a user interface to enter data/information to the receiver/display unit **446**/**448**, and/or output data to the user such as visual, audible, vibratory, or one or more combinations thereof.

In certain aspects, the processing unit **3720** may be configured to include some or all of the functionalities including data processing, analysis, and/or data storage (including calibration variables, encoded information, calibration algorithm) of the calibration unit discussed above, in addition to the operations of the receiver/display unit **446**/**448** discussed above. While FIG. **37** shows the test strip interface **3710**, the processing unit **3720** and the input/output unit **3730** of the receiver/display unit **446**/**448**, within the scope of the present disclosure, the receiver/display unit **446**/**448** includes additional components and functionalities as described above in conjunction with the operation of the analyte monitoring system.

In certain embodiments, an auto turn on blood glucose monitor may also be used with a drug administration system such as an insulin delivery system, including integrated therewith or otherwise coupled thereto (e.g., wired to and/or wirelessly coupled), as described herein. In such embodiments, the auto turn on monitor may be used to confirm glucose concentration obtained using the in vivo analyte sensor prior to the drug administration system delivery of a drug. A user may be required to affirmatively confirm a recommended drug administration event before the drug is administered.

Embodiments include an integrated drug administration system for monitoring and treating diabetes that includes an auto turn on blood glucose monitor unit as described herein, e.g., integrated with a component of the system such as a receiver unit and/or drug administration device. The integrated auto turn on drug administration system may include an in vivo glucose sensor that is configured so that at least a portion of which is insertable and positionable beneath a skin surface of a user so that it is in contact with a biological fluid such as blood, interstitial fluid, etc., and which substantially continuously measures glucose in a user for a period of time as described herein, e.g., at least about one hour or more, e.g., about 24 hours or more, e.g., about multiple days or more, e.g., about 1 week or more, and outputs a data stream that includes sensor data points. The system may also include a receiver/display unit as described herein that has an integrated blood glucose monitor and analyte test port, and is configured to receive the sensor data stream, and an insulin delivery device that is coupled to the receiver unit, e.g., inte-

grated and/or physically detachably connectable to the receiver, or the like. The insulin delivery device may include a syringe, a transdermal patch, an inhaler or spray delivery device, a pen or pen-type injector, transdermal pump, any of which may be connected to a component of the system such as the receiver unit, e.g., detachably connected. A component of the system, e.g., the receiver, and/or the insulin delivery device and/or a sensor control unit, may detect (e.g., automatically) clinical risk, including impending clinical risk as described herein (e.g., hypoglycemia, impending hypoglycemia, hyperglycemia, impending hyperglycemia), and determine an insulin dosage recommendation based on the clinical risk. Programming may be included that requires a component of the system, e.g., the receiver, and/or the insulin delivery device and/or a sensor control unit, to be validated and/or confirmed by a user. For example, a user may be prompted by the user interface as described herein. Drug administration systems that may be employed include, but are not limited to, U.S. Pat. No. 6,916,159; and U.S. patent application Ser. Nos. 11/530,473; 11/462,982; 11/462,974, now U.S. Pat. No. 8,206,296; Ser. Nos. 11/427,587; 11/427,187; 11/428,299; 11/386,915; 11/106,155, now U.S. Pat. No. 7,993,108; Ser. No. 12/032,593; the disclosures of which are herein incorporated by reference.

Integration with a Drug Administration System

FIG. **25** illustrates a block diagram of a sensor-based drug delivery system **250** according to the present invention. The system may provide a drug to counteract the high or low level of the analyte in response to the signals from one or more sensors **252**. Alternatively, the system monitors the drug concentration to ensure that the drug remains within a desired therapeutic range. The drug delivery system includes one or more (and preferably two or more) subcutaneously implanted sensors **252**, an on-skin sensor control unit **254**, a receiver/display unit **256**, a data storage and controller module **258**, and a drug administration system **260**. In some cases, the receiver/display unit **256**, data storage and controller module **258**, and drug administration system **260** may be integrated in a single unit. The sensor-based drug delivery system **250** uses data from the one or more sensors **252** to provide necessary input for a control algorithm/mechanism in the data storage and controller module **258** to adjust the administration of drugs. As an example, a glucose sensor could be used to control and adjust the administration of insulin.

In FIG. **25**, sensor **252** produces signals correlated to the level of the drug or analyte in the patient. The level of the analyte will depend on the amount of drug delivered by the drug administration system. A processor **262** in the on-skin sensor control unit **254**, as illustrated in FIG. **25**, or in the receiver/display unit **256** determines the level of the analyte, and possibly other information, such as the rate or acceleration of the rate in the increase or decrease in analyte level. This information is then transmitted to the data storage and controller module **258** using a transmitter **264** in the on-skin sensor control unit **254**, as illustrated in FIG. **25**, or a non-integrated receiver/display unit **256**.

If the drug delivery system **250** has two or more sensors **252**, the data storage and controller module **258** may verify that the data from the two or more sensors **252** agrees within predetermined parameters before accepting the data as valid. This data may then be processed by the data storage and controller module **258**, optionally with previously obtained data, to determine a drug administration protocol. The drug administration protocol is then executed using the drug administration system **260**, which may be an internal or external infusion pump, syringe injector, transdermal delivery system (e.g., a patch containing the drug placed on the skin), or inhalation system. Alternatively, the drug storage and controller module **258** may provide the drug administration protocol so that the patient or another person may provide the drug to the patient according to the profile.

In one embodiment of the invention, the data storage and controller module **258** is trainable. For example, the data storage and controller module **258** may store glucose readings over a predetermined period of time, e.g., several weeks. When an episode of hypoglycemia or hyperglycemia is encountered, the relevant history leading to such event may be analyzed to determine any patterns which might improve the system's ability to predict future episodes. Subsequent data might be compared to the known patterns to predict hypoglycemia or hyperglycemia and deliver the drug accordingly. In another embodiment, the analysis of trends is performed by an external system or by the processing circuit **109** in the on-skin sensor control unit **254** or the analyzer **152** in the receiver/display unit **256** and the trends are incorporated in the data storage and controller **258**.

In one embodiment, the data storage and controller module **258**, processing circuit **109**, and/or analyzer **152** utilizes patient-specific data from multiple episodes to predict a patient's response to future episodes. The multiple episodes used in the prediction are typically responses to a same or similar external or internal stimulus. Examples of stimuli include periods of hypoglycemia or hyperglycemia (or corresponding conditions for analytes other than glucose), treatment of a condition, drug delivery (e.g., insulin for glucose), food intake, exercise, fasting, change in body temperature, elevated or lowered body temperature (e.g., fever), and diseases, viruses, infections, and the like. By analyzing multiple episodes, the data storage and controller module **258**, processing circuit **109**, and/or analyzer **152** can predict the course of a future episode and provide, for example, a drug administration protocol or administer a drug based on this analysis. An input device (not shown) may be used by the patient or another person to indicate when a particular episode is occurring so that, for example, the data storage and controller module **258**, processing circuit **109**, and/or analyzer **152** can tag the data as resulting from a particular episode, for use in further analyses.

In addition, the drug delivery system **250** may be capable of providing on-going drug sensitivity feedback. For example, the data from the sensor **252** obtained during the administration of the drug by the drug administration system **260** may provide data about the individual patient's response to the drug which can then be used to modify the current drug administration protocol accordingly, both immediately and in the future. An example of desirable data that can be extracted for each patient includes the patient's characteristic time constant for response to drug administration (e.g., how rapidly the glucose concentration falls when a known bolus of insulin is administered). Another example is the patient's response to administration of various amounts of a drug (e.g., a patient's drug sensitivity curve). The same information may be stored by the drug storage and controller module and then used to determine trends in the patient's drug response, which may be used in developing subsequent drug administration protocols, thereby personalizing the drug administration process for the needs of the patient.

In one embodiment, when the sensor data from the two separate sensors **252** are compared and are determined to fall within a range of tolerance, then the sensor-based drug delivery system **250** may be configured to calculate an appropriate drug infusion level to determine a correction factor to compensate for the level of the monitored analyte in the patient falling outside of the acceptable range, or alternatively, to

determine a suitable modification to an existing infusion delivery rate based on the sensor data.

In this manner, in one embodiment of the present invention, when the data obtained from the two sensors agree, then a closed loop system may be attained where the sensor-based drug delivery system **250** may be configured to dynamically modify the drug delivery rate for patient therapy based on contemporaneous and accurate measurements of the patient's analyte levels using the sensors **252** in the continuous monitoring system.

On the other hand, if the comparison of the data from the two sensors **252** do not agree or otherwise fall within an acceptance range of tolerance, then the sensor-based drug delivery system **250** reverts to an open loop system, prompting the patient of the user to intervene and for example, instruct the patient to perform a finger stick confirmatory test to confirm the accuracy of the sensor data. For example, the system may prompt the patient to perform a finger stick (or arm) blood glucose testing using a blood glucose meter to confirm the accuracy of the analyte sensor monitoring the glucose level of the patient. In this case, the patient may separately determine the appropriate dosage, or otherwise, confirm a calculated dosage for administration (for example, a bolus, or a modification to the existing basal profile). Alternatively, based on the glucose reading from the finger stick testing, for example, the patient may manually calculate a correction bolus, for example, or a modification to the existing basal profile to improve upon the existing insulin infusion rate.

In some embodiments, an integrated monitor and display unit includes a housing, comprising an RF receiver disposed in the housing and configured to receive data relating to analyte signals generated by a transcutaneous analyte sensor from a transmitter, an analyte sensor port coupled to the housing and configured to receive an in vitro analyte sensor, wherein the in vitro analyte sensor generates an analyte signal from a fluid sample, and a processor disposed in the housing and configured to validate the data relating to analyte signals from the transcutaneous analyte sensor based, at least in part, on the analyte signal from the in vitro analyte sensor, wherein the processor is configured to transition from an inactivate mode to an active mode upon detection of the in vitro analyte sensor in the analyte sensor port.

The processor in certain aspects is configured to transition from the inactive mode to the active mode automatically upon detection of the in vitro test strip in the sensor port.

The processor in certain aspects is configured to turn on the integrated monitor and display unit by transitioning from the inactive mode to the active mode.

In certain aspects, the active mode comprises fluid sample analysis mode.

In certain aspects, the fluid sample analysis mode includes the processor executing one or more routines associated with determination of the analyte level from the fluid sample received from the in vitro analyte sensor.

The processor in certain aspects transitions from the inactive mode to the active mode when the processor detects the in vitro analyte sensor at a predetermined location within the analyte sensor port.

In certain aspects, the detection is a physical detection; in certain other aspects, the detection is an optical detection. In still other aspects, the detection is an electrical detection.

In certain aspects, the analyte sensor port comprises at least a first structure positioned to interact with the in vitro analyte sensor and transition the integrated monitor and display unit from the inactive mode to the active mode.

In certain aspects, the structure interacts with the in vitro analyte sensor and provides a physical signal to transition the integrated monitor and display unit from the inactive mode to an active mode.

In certain aspects, the structure interacts with the in vitro analyte sensor and provides an electrical signal to transition the integrated monitor and display unit from the inactive mode to an active mode.

In certain aspects, the structure interacts with the in vitro analyte sensor and provides an optical signal to transition the integrated monitor and display unit from the inactive mode to an active mode.

In certain aspects, the processor validates the data by determining whether a rate of change of analyte signals from the transcutaneous analyte sensor is within a predetermined acceptable range.

In certain aspects, the processor validates the data by determining whether the analyte signal from the transcutaneous analyte sensor is within a predetermined acceptable analyte signal range.

In certain aspects, the processor is configured to validate the data relating to analyte signals from the transcutaneous analyte sensor prior to recommending and/or executing a therapy action based on data relating to analyte signals from the transcutaneous analyte sensor.

In certain aspects, the RF receiver continuously receives data transmitted by the transmitter.

In certain aspects, the analyte is glucose.

In certain aspects, the in vitro analyte sensor is positioned within the analyte sensor port.

In some embodiments there is provided a method comprising detecting a presence of an in vitro analyte test strip having a fluid sample thereon using an integrated monitor physically coupled to a strip port configured for receiving the test strip, activating one or more routines of the integrated monitor upon detection of the presence of the in vitro analyte test strip, executing the activated one or more routines using the integrated monitor, at least one of the one or more routines associated with processing one or more signals generated by the test strip based on the fluid sample, and wirelessly receiving time spaced signals from a transmitter using the integrated monitor, with each of the received time spaced signals corresponding to a monitored analyte level, wherein executing the activated one or more routines further includes one or more of determining an analyte level from the fluid sample of the test strip using the integrated monitor, calibrating the wirelessly received time spaced signals, determining a type of the test strip detected in the strip port of the integrated monitor, or displaying the calibrated one or more time spaced signals.

In certain aspects, the method further includes activating the one or more routines includes transitioning from an inactive operating mode to an active operating mode of the integrated monitor.

In certain aspects, the method further includes executing the activated one or more routines and generating a request to provide a calibration parameter associated with the in vitro test strip when the determined type of the in vitro test strip is of a first type, or retrieving the calibration parameter from a storage unit physically coupled to the integrated monitor associated with the in vitro test strip when the determined type of the in vitro test strip is of a second type.

In certain aspects, the method further includes determining a corresponding analyte level based on the one or more signals generated by the test strip of the first type when the requested calibration parameter is received, and further, determining a corresponding analyte level based on the one or

more signals generated by the test strip of the second type based on the retrieved calibration parameter.

In certain aspects, the method further includes calibrating the received time spaced signals using the integrated monitor based on the determined analyte level from the fluid sample.

An apparatus in accordance with still further embodiments include an integrated housing including a test strip interface coupled to the housing and configured to receive an in vitro analyte test strip, one or more processors disposed in the housing, and a memory disposed in the housing and for storing instructions which, when executed by the one or more processors, causes the one or more processors to detect a presence of the in vitro analyte test strip having a fluid sample thereon, to activate one or more routines of the apparatus upon detection of the presence of the in vitro analyte test strip, to execute the activated one or more routines, at least one of the one or more routines associated with processing one or more signals generated by the test strip based on the fluid sample, and to wirelessly receive time spaced signals from a transmitter using the integrated monitor, each received time spaced signals corresponding to a monitored analyte level.

In certain aspects, the memory for storing instructions which, when executed by the one or more processors, causes the one or more processors to determine an analyte level from the fluid sample of the test strip using the integrated monitor, to calibrate the wirelessly received time spaced signals, determining a type of the test strip detected in the strip port of the integrated monitor, to display the calibrated one or more time spaced signals, or to perform one or more combinations thereof.

In certain aspects, the memory for storing instructions which, when executed by the one or more processors, causes the one or more processors to transition from an inactive operating mode to an active operating mode.

In certain aspects, the memory for storing instructions which, when executed by the one or more processors, causes the one or more processors to calibrate the one or more signals generated by the test strip of the second type automatically based on the retrieved calibration parameter without user interaction.

In certain aspects, the memory for storing instructions which, when executed by the one or more processors, causes the one or more processors to calibrate the received time spaced signals based on the determined corresponding analyte level from the one or more signals generated by the test strip.

The present invention should not be considered limited to the particular examples described above, but rather should be understood to cover all aspects of the invention as fairly set out in the attached claims. Various modifications, equivalent processes, as well as numerous structures to which the present invention may be applicable will be readily apparent to those of skill in the art to which the present invention is directed upon review of the instant specification. The claims are intended to cover such modifications and devices.

What is claimed is:

1. An integrated monitor and display unit, comprising:

a housing;

a data receiver disposed in the housing and configured to receive data relating to analyte signals generated by a transcutaneously positioned analyte sensor in fluid contact with interstitial fluid;

a port coupled to the housing and configured to receive an in vitro analyte sensor, the in vitro analyte sensor having a conductive material on an exterior or interior surface; and

a processor disposed in the housing and configured to validate the data relating to monitored analyte signals received from the transcutaneously positioned analyte sensor based at least in part on one or more signals from the in vitro analyte sensor, and further, to determine a type of in vitro analyte sensor when a presence of the in vitro analyte sensor in the port is detected;

wherein the port is configured to receive a first type of in vitro analyte sensor which is not associated with one or more predetermined calibration parameters, and a second type of in vitro analyte sensor which is associated with the one or more predetermined calibration parameters; and

wherein the processor is configured to generate a request to provide a calibration parameter associated with the in vitro analyte sensor when the determined type of the in vitro analyte sensor is of the first type, or to retrieve, from a storage unit operatively coupled to the processor, the one or more predetermined calibration parameters associated with the in vitro analyte sensor when the determined type of the in vitro analyte sensor is of the second type.

2. The integrated monitor and display unit of claim **1**, wherein the processor is configured to transition from an inactive mode to an active mode upon detection of the in vitro analyte sensor in the port.

3. The integrated monitor and display unit of claim **2**, wherein the processor is configured to turn on the integrated monitor and display unit by transitioning from the inactive mode to the active mode.

4. The integrated monitor and display unit of claim **2**, wherein the active mode comprises a fluid sample analysis mode.

5. The integrated monitor and display unit of claim **4**, wherein the fluid sample analysis mode includes the processor executing one or more routines to determine an analyte level from a fluid sample received from the in vitro analyte sensor.

6. The integrated monitor and display unit of claim **2**, wherein the port comprises at least a structure positioned to interact with the in vitro analyte sensor and transition the integrated monitor and display unit from the inactive mode to the active mode.

7. The integrated monitor and display unit of claim **6**, wherein the structure positioned to interact with the in vitro analyte sensor provides an electrical signal to transition the integrated monitor and display unit from the inactive mode to the active mode.

8. The integrated monitor and display unit of claim **1**, wherein the processor is configured to validate the data relating to the analyte signals generated by the transcutaneously positioned analyte sensor by determining whether the analyte signals are within a predetermined range.

9. The integrated monitor and display unit of claim **1**, wherein the processor is configured to validate the data relating to the analyte signals generated by the transcutaneously positioned analyte sensor by determining whether a rate of change of the analyte signals is within a predetermined range.

10. The integrated monitor and display unit of claim **1**, wherein the processor is configured to validate the data relating to the analyte signals generated by the transcutaneously positioned analyte sensor prior to recommending and/or executing a therapy action based on the data relating to the analyte signals.

11. The integrated monitor and display unit of claim **1**, wherein the data receiver receives data from sensor electronics operatively coupled to the analyte sensor.

12. The integrated monitor and display unit of claim 1, wherein the conductive material of the in vitro analyte sensor is a conductive strip extending at least partially across the exterior or interior surface of the in vitro analyte sensor.

13. The integrated monitor and display unit of claim 1, wherein the conductive material of the in vitro analyte sensor includes at least two electrical contacts connected by a conductive ink.

14. The integrated monitor and display unit of claim 1, wherein the conductive material on the exterior or interior surface of the in vitro analyte sensor is used to close an electrical circuit.

15. The integrated monitor and display unit of claim 1, wherein the transcutaneously positioned analyte sensor comprises a plurality of electrodes including a working electrode, wherein the working electrode comprises an analyte-responsive enzyme and a mediator, wherein at least one of the analyte-responsive enzyme and the mediator is chemically bonded to a polymer disposed on the working electrode, and wherein at least one of the analyte-responsive enzyme and the mediator is crosslinked with the polymer.

16. A method implemented using one or more processors, comprising:

determining a type of in vitro analyte sensor when a presence of the in vitro analyte sensor is detected in a port, wherein the port is configured to receive a first type of in vitro analyte sensor which is not associated with stored one or more predetermined calibration parameters and a second type of in vitro analyte sensor which is associated with the stored one or more predetermined calibration parameters;

executing one or more routines associated with processing one or more signals generated by the in vitro analyte sensor based on a fluid sample; and

receiving time spaced signals from sensor electronics, each of the received time spaced signal corresponding to a monitored analyte level from a transcutaneously positioned analyte sensor in fluid contact with interstitial fluid and operatively coupled to the sensor electronics;

wherein executing the one or more routines further includes one or more of determining an analyte level from the fluid sample of the in vitro analyte sensor, calibrating the received time spaced signals, or displaying the calibrated time spaced signals; and

wherein executing the one or more routines further includes generating a request to provide a calibration parameter associated with the in vitro analyte sensor when the determined type of the in vitro analyte sensor is of the first type, or retrieving from a storage unit the one or more predetermined calibration parameters associated with the in vitro analyte sensor when the determined type of the in vitro analyte sensor is of the second type.

17. The method of claim 16, wherein executing the one or more routines includes transitioning from an inactive operating mode to an active operating mode upon detection of the in vitro analyte sensor in the port.

18. The method of claim 16, further including determining a corresponding analyte level based on the one or more signals generated by the in vitro analyte sensor of the first type when the requested calibration parameter is received, and further, determining a corresponding analyte level based on the one or more signals generated by the in vitro analyte sensor of the second type based on the retrieved one or more calibration parameters.

19. The method of claim 16, further including calibrating the received time spaced signals based on the determined analyte level from the fluid sample.

20. The method of claim 16, wherein the transcutaneously positioned analyte sensor comprises a plurality of electrodes including a working electrode, wherein the working electrode comprises an analyte-responsive enzyme and a mediator, wherein at least one of the analyte-responsive enzyme and the mediator is chemically bonded to a polymer disposed on the working electrode, and wherein at least one of the analyte-responsive enzyme and the mediator is crosslinked with the polymer.

* * * * *