US009089270B2

(12) **United States Patent**
Song et al.

(10) **Patent No.: US 9,089,270 B2**
(45) **Date of Patent: Jul. 28, 2015**

(54) **TERMINAL AND CONTROL METHOD THEREOF**

(75) Inventors: **Seungkyu Song**, Seoul (KR); **Seehyung Lee**, Seoul (KR); **Sangmo Park**, Seoul (KR); **Seonghyok Kim**, Seoul (KR); **Dongchul Jin**, Seoul (KR); **Hyunjin Kim**, Seoul (KR); **Gukchan Lim**, Seoul (KR); **Jinsu Lee**, Seoul (KR)

(73) Assignee: **LG Electronics Inc.**, Seoul (KR)

(*) Notice: Subject to any disclaimer, the term of this patent is extended or adjusted under 35 U.S.C. 154(b) by 70 days.

(21) Appl. No.: **13/536,065**

(22) Filed: **Jun. 28, 2012**

(65) **Prior Publication Data**

US 2013/0005303 A1 Jan. 3, 2013

(30) **Foreign Application Priority Data**

Jun. 29, 2011 (KR) 10-2011-0063728
Nov. 21, 2011 (KR) 10-2011-0121306

(51) **Int. Cl.**

H04M 1/66	(2006.01)
A61B 5/0404	(2006.01)
A61B 5/024	(2006.01)
A61B 5/0488	(2006.01)
A61B 5/117	(2006.01)
A61B 5/16	(2006.01)
A61B 5/00	(2006.01)
H04M 1/05	(2006.01)
H04M 1/21	(2006.01)
H04M 1/725	(2006.01)
H04R 1/10	(2006.01)

(Continued)

(52) **U.S. Cl.**

CPC ***A61B 5/0404*** (2013.01); ***A61B 5/02438*** (2013.01); ***A61B 5/0488*** (2013.01); ***A61B 5/1172*** (2013.01); ***A61B 5/165*** (2013.01); ***A61B 5/6898*** (2013.01); ***A61B 5/7203*** (2013.01); ***H04M 1/05*** (2013.01); ***H04M 1/21*** (2013.01); ***H04M 1/72519*** (2013.01); ***H04M 1/72527*** (2013.01); ***H04R 1/1041*** (2013.01); *H04M 2250/12* (2013.01)

(58) **Field of Classification Search**

CPC A61B 5/0205; A61B 2560/0468; A61B 5/02055; A61B 5/6887; A61B 5/0404; A61B 5/002; A61B 5/0476; A61B 5/021; A61B 5/0816; A61B 5/14542; A61B 5/0006; A61B 5/02405; A61B 5/0402; A61B 5/02438; A61B 5/0488; A61B 5/165; H04M 1/6066; H04M 1/72527; H04M 2250/12
USPC 455/411, 41.2, 556.1
See application file for complete search history.

(56) **References Cited**

U.S. PATENT DOCUMENTS

6,485,416	B1 *	11/2002	Platt et al.	600/300
2001/0012201	A1	8/2001	Fries et al.	

(Continued)

FOREIGN PATENT DOCUMENTS

CN	200960123	Y	10/2007
CN	101540795	A	9/2009

(Continued)

Primary Examiner — Timothy Pham
(74) *Attorney, Agent, or Firm* — Birch, Stewart, Kolasch & Birch

(57) **ABSTRACT**

A terminal is provided. the terminal includes: at least one body sensor; at least one wireless communication module; a display unit; a memory for storing a program that processes at least one body signal detected by the at least one body sensor; and a control unit for executing the memory.

16 Claims, 52 Drawing Sheets

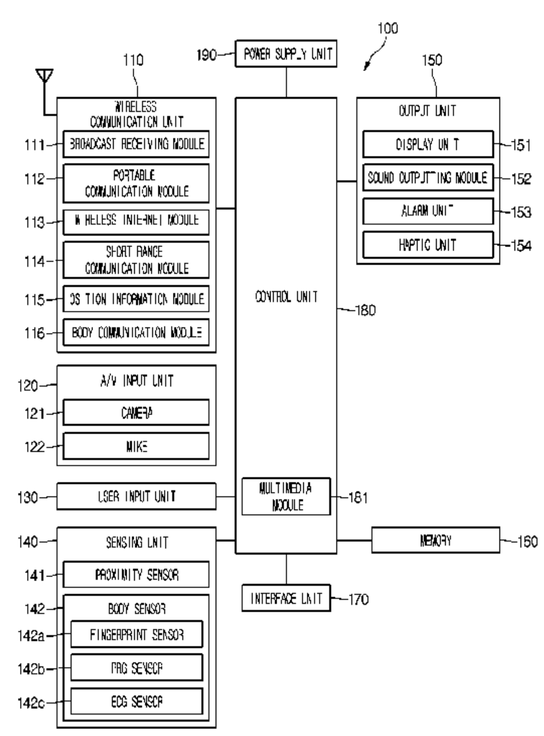

(51) **Int. Cl.**

H04M 1/00	(2006.01)
H04B 7/00	(2006.01)
H04B 1/38	(2006.01)

(56) **References Cited**

U.S. PATENT DOCUMENTS

2004/0147814	A1*	7/2004	Zancho et al.	600/300
2004/0152957	A1*	8/2004	Stivoric et al.	600/300
2005/0081847	A1*	4/2005	Lee et al.	128/200.24
2005/0239493	A1*	10/2005	Batkin et al.	455/550.1
2006/0004298	A1*	1/2006	Kennedy et al.	600/546
2006/0061468	A1	3/2006	Ruha	
2006/0166702	A1	7/2006	Dietz et al.	
2007/0244669	A1	10/2007	Vogel et al.	
2008/0146892	A1	6/2008	LeBoeuf et al.	
2008/0274770	A1*	11/2008	Park et al.	455/557
2009/0023391	A1*	1/2009	Falck	455/41.2
2009/0326406	A1*	12/2009	Tan et al.	600/546
2010/0217100	A1*	8/2010	LeBoeuf et al.	600/301
2011/0015496	A1*	1/2011	Sherman et al.	600/301
2011/0065482	A1*	3/2011	Koide et al.	455/566
2011/0301435	A1*	12/2011	Albert et al.	600/301

FOREIGN PATENT DOCUMENTS

CN	102027734	A	4/2011
EP	2 278 776	A1	1/2011
JP	2008-161641	A	7/2008
KR	10-2003-0041387	A	5/2003
KR	10-2006-0111159	A	10/2006
WO	WO 2011/040877	A1	4/2011

* cited by examiner

FIG.1

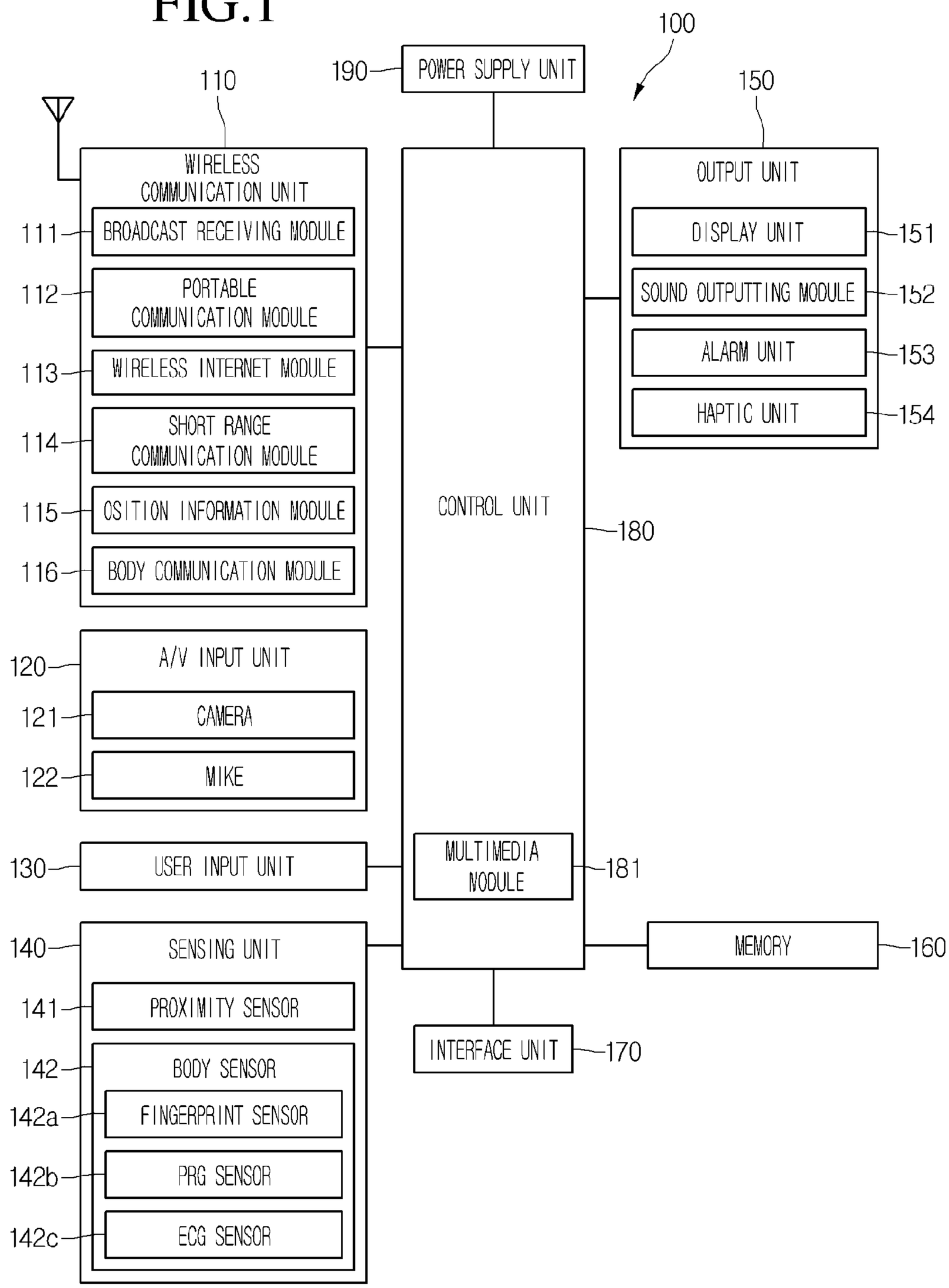
100
190
POWER SUPPLY UNIT
110
150
WIRELESS COMMUNICATION UNIT
111
BROADCAST RECEIVING MODULE
112
PORTABLE COMMUNICATION MODULE
113
WIRELESS INTERNET MODULE
114
SHORT RANGE COMMUNICATION MODULE
115
OSITION INFORMATION MODULE
116
BODY COMMUNICATION MODULE
OUTPUT UNIT
DISPLAY UNIT
151
SOUND OUTPUTTING MODULE
152
ALARM UNIT
153
HAPTIC UNIT
154
CONTROL UNIT
180
120
A/V INPUT UNIT
121
CAMERA
122
MIKE
130
USER INPUT UNIT
MULTIMEDIA MODULE
181
140
SENSING UNIT
141
PROXIMITY SENSOR
142
BODY SENSOR
142a
FINGERPRINT SENSOR
142b
PRG SENSOR
142c
ECG SENSOR
MEMORY
160
INTERFACE UNIT
170

FIG.2

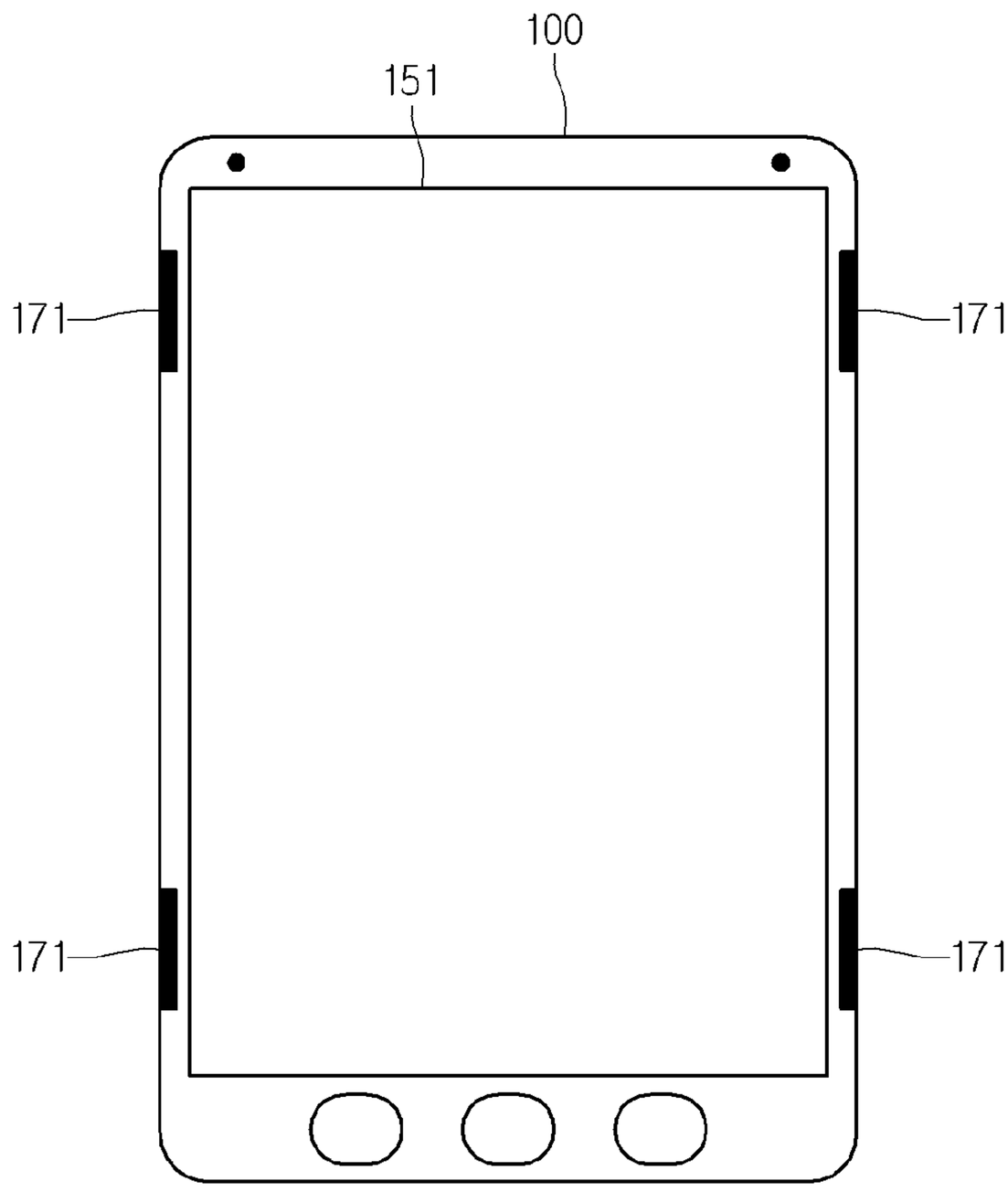

FIG.3

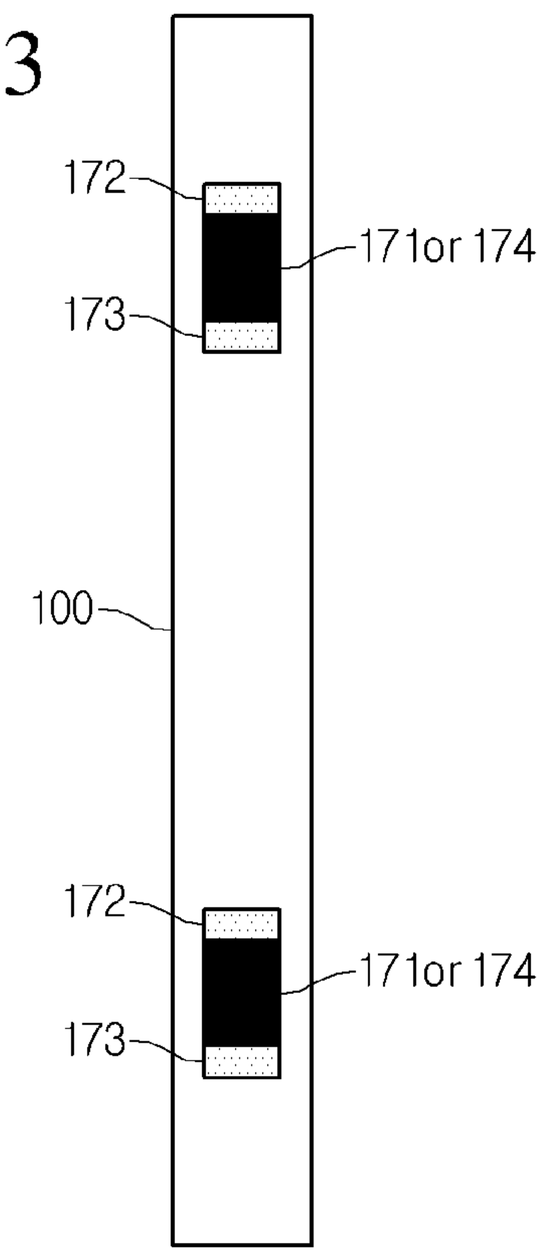

FIG.4

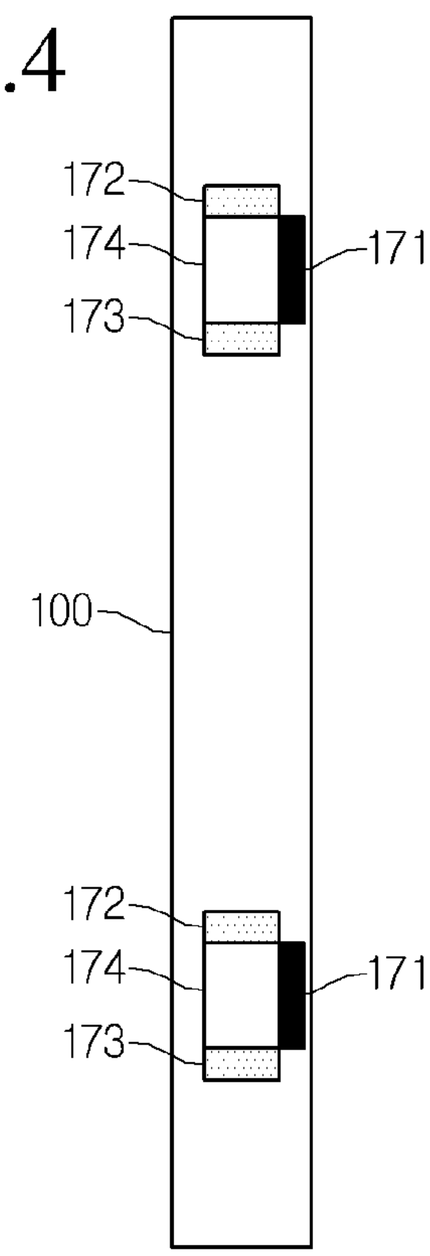

FIG.5

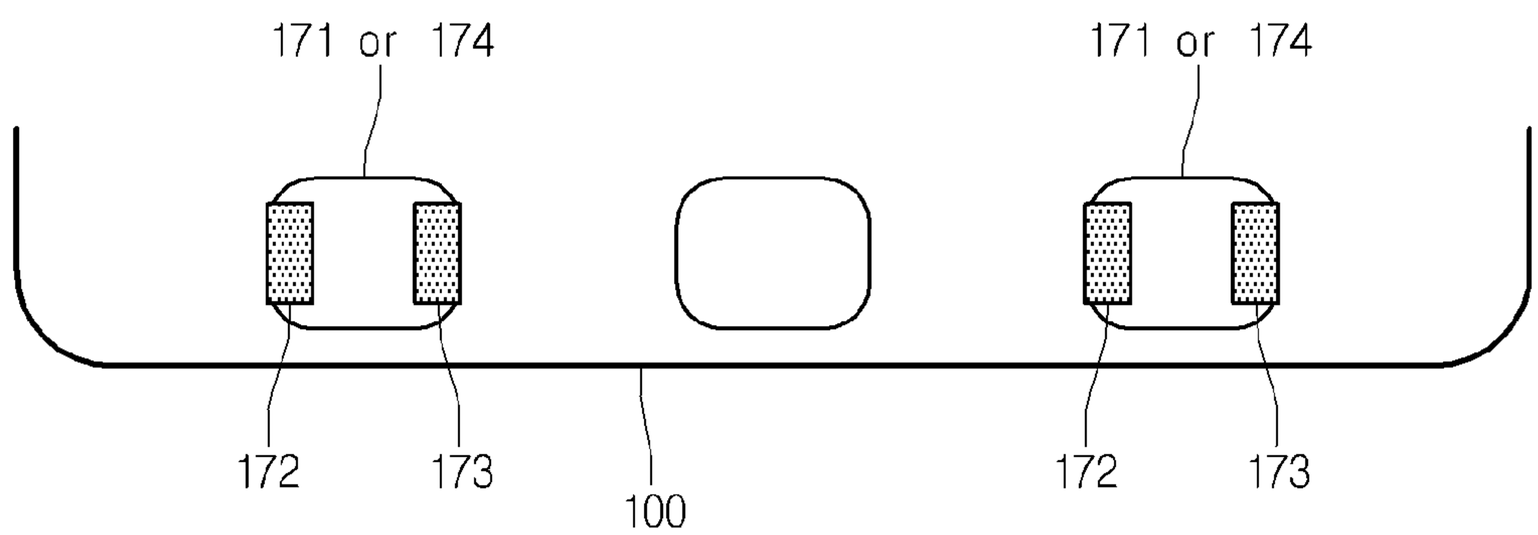

FIG.6

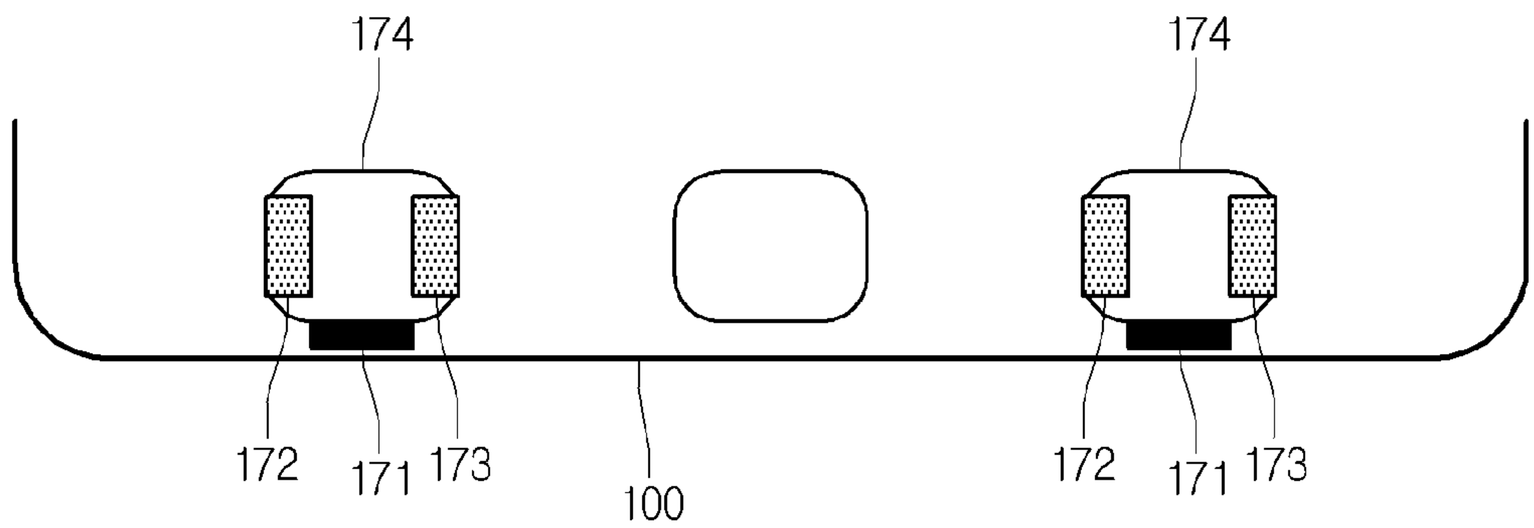

FIG.7

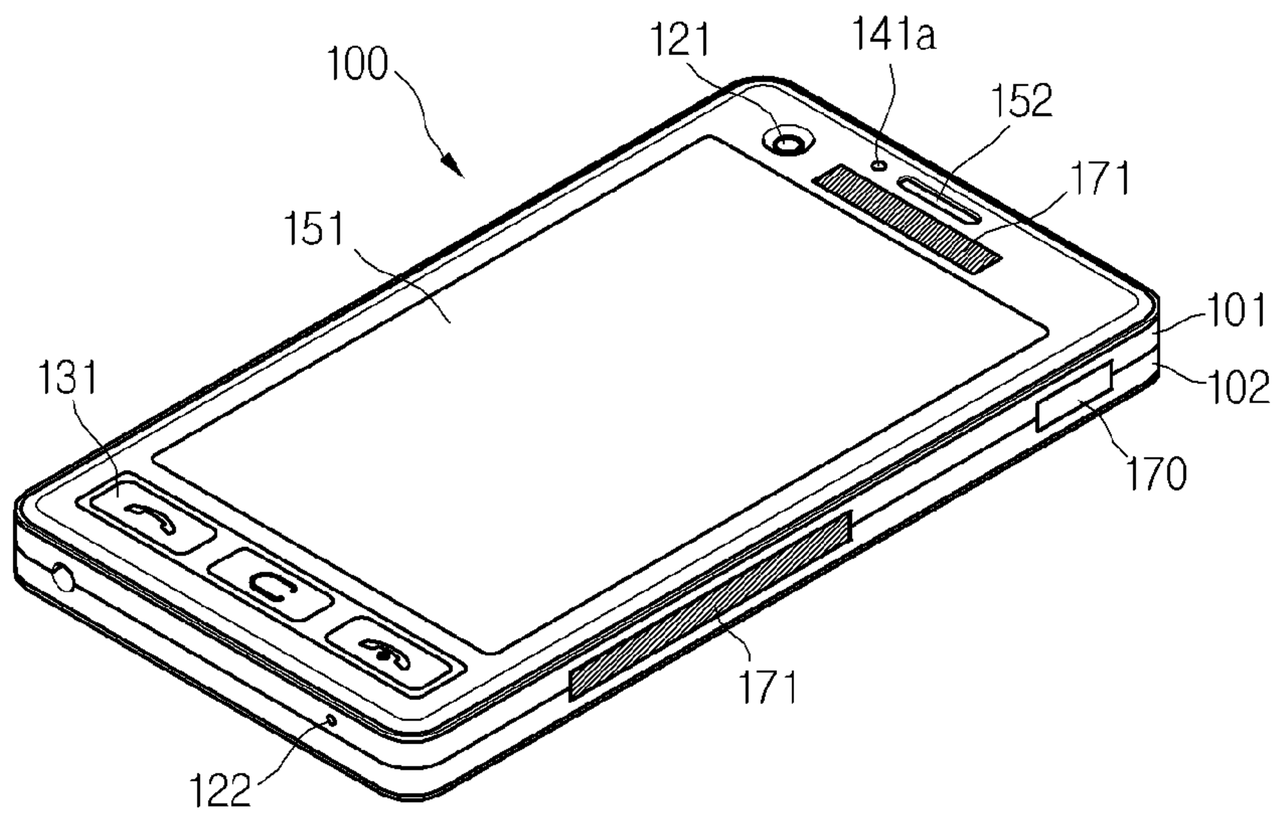

FIG.8

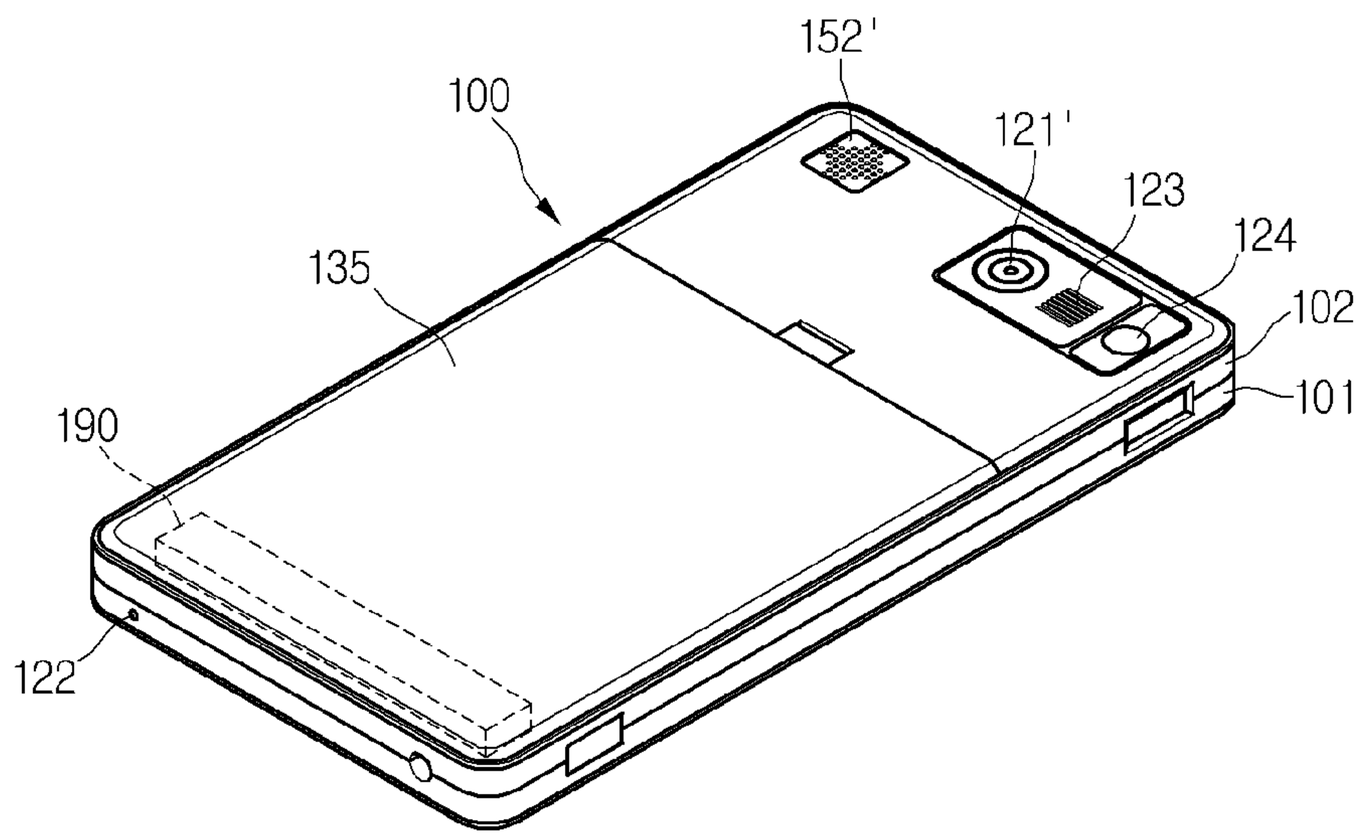

FIG.9

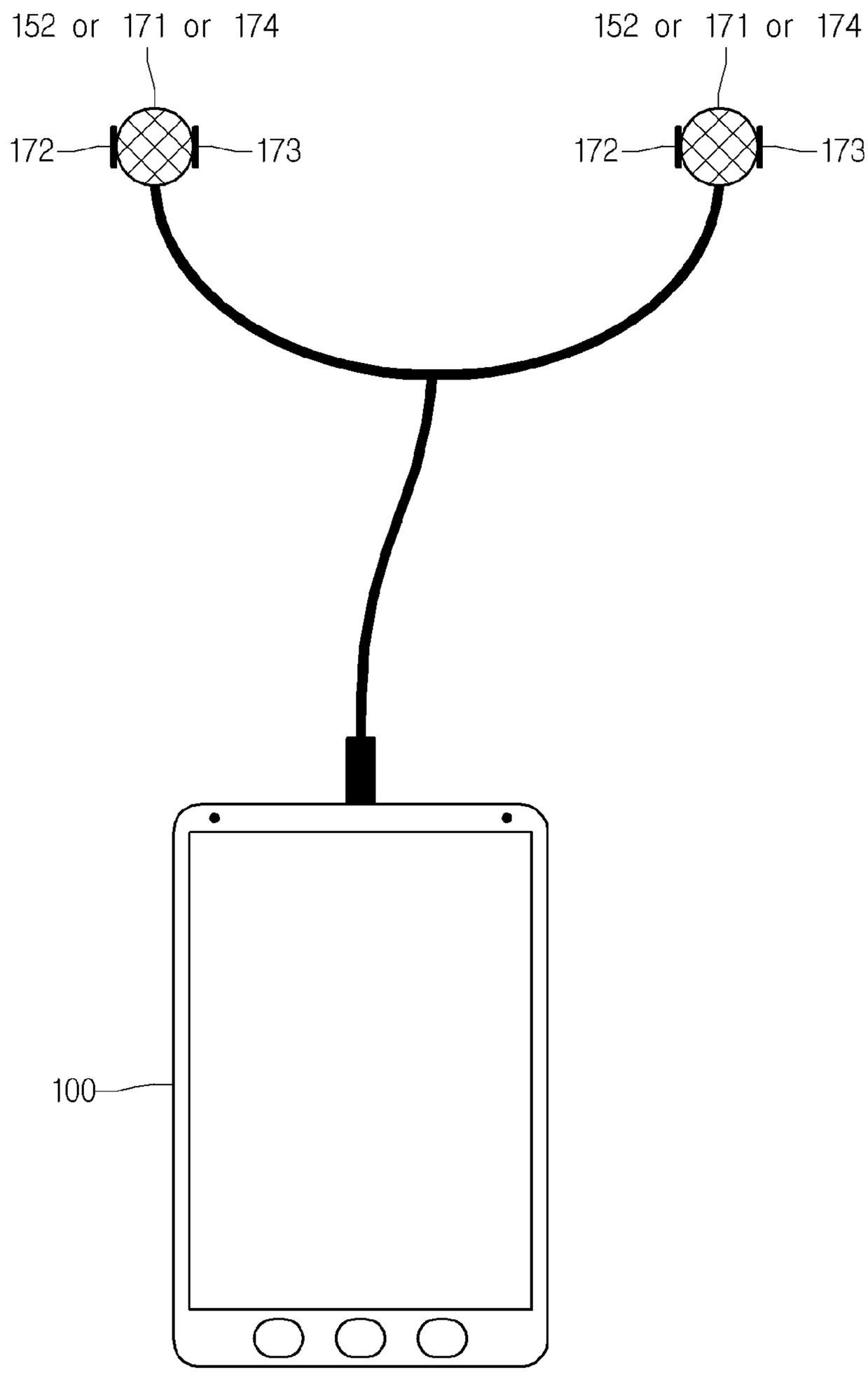

FIG.10

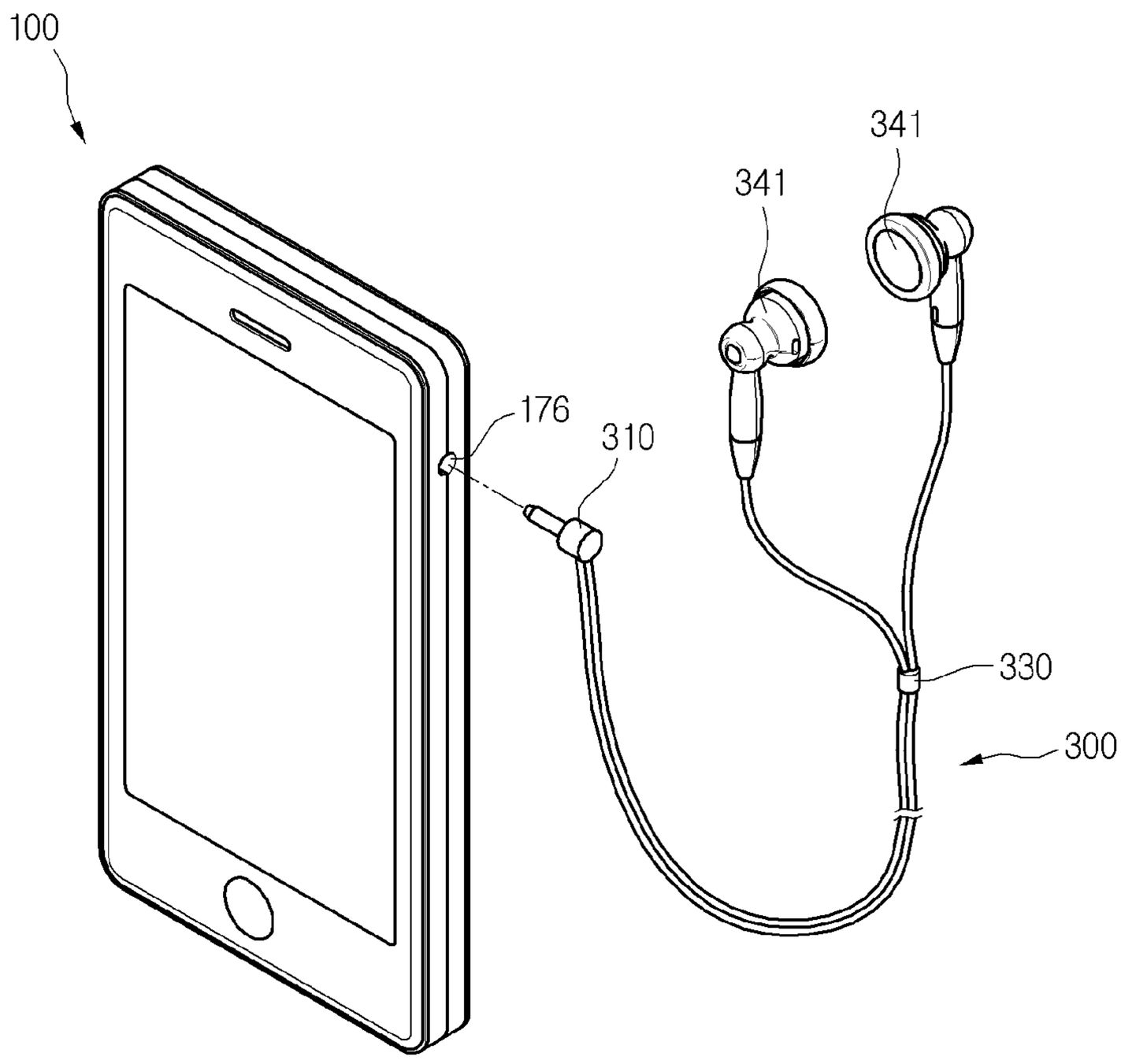

FIG.11

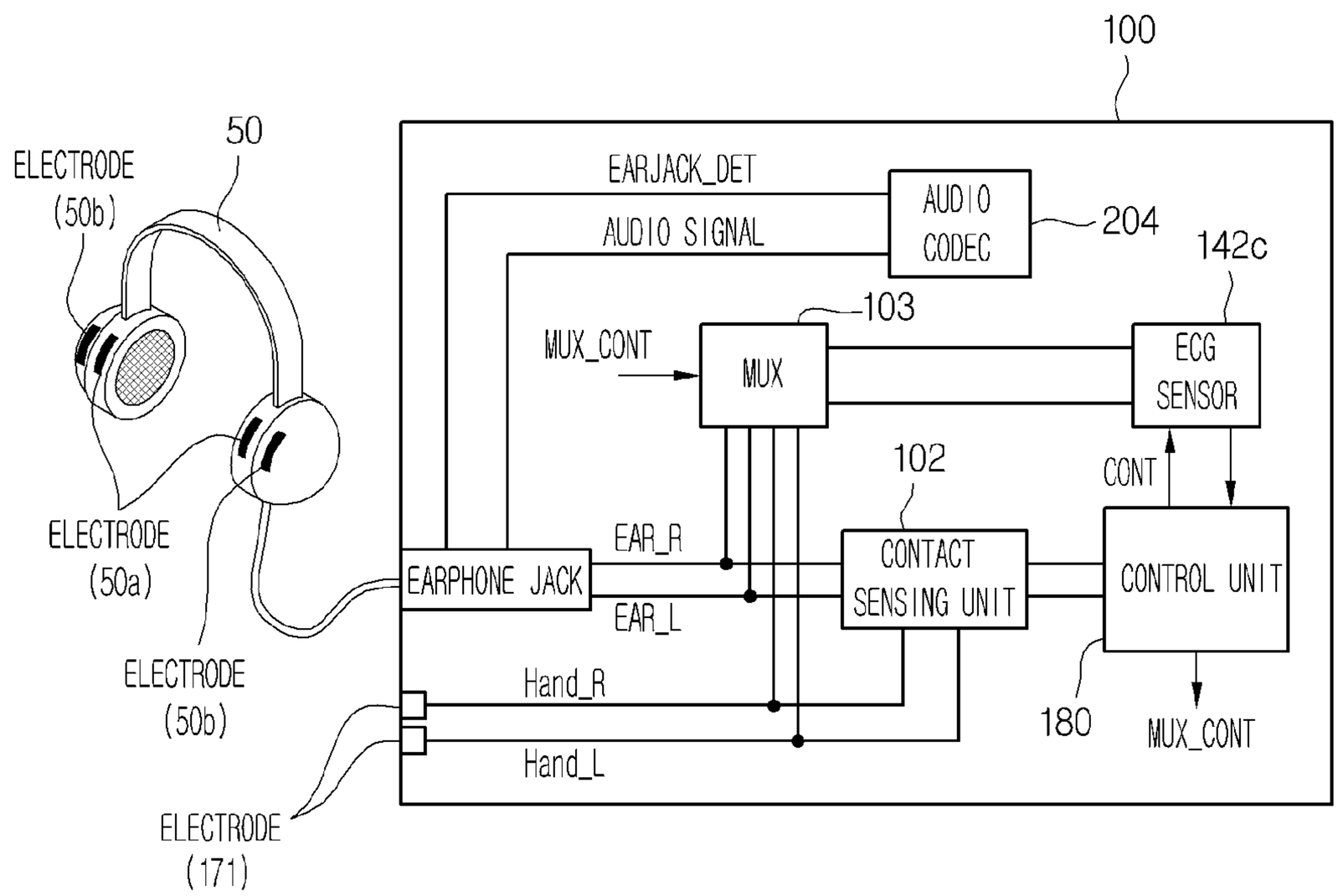
100
50
ELECTRODE
(50b)
EARJACK_DET
AUDIO
CODEC
204
AUDIO SIGNAL
142c
103
MUX_CONT
MUX
ECG
SENSOR
102
CONT
ELECTRODE
(50a)
EAR_R
CONTACT
SENSING UNIT
CONTROL UNIT
EARPHONE JACK
EAR_L
ELECTRODE
(50b)
Hand_R
180
MUX_CONT
Hand_L
ELECTRODE
(171)

FIG.12

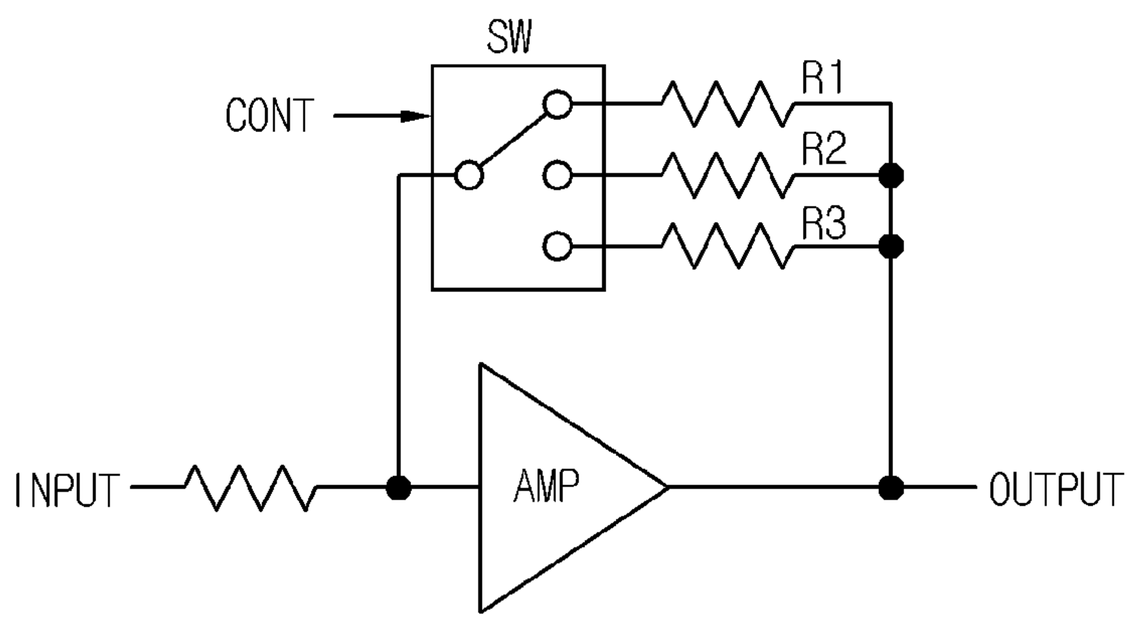

FIG.13

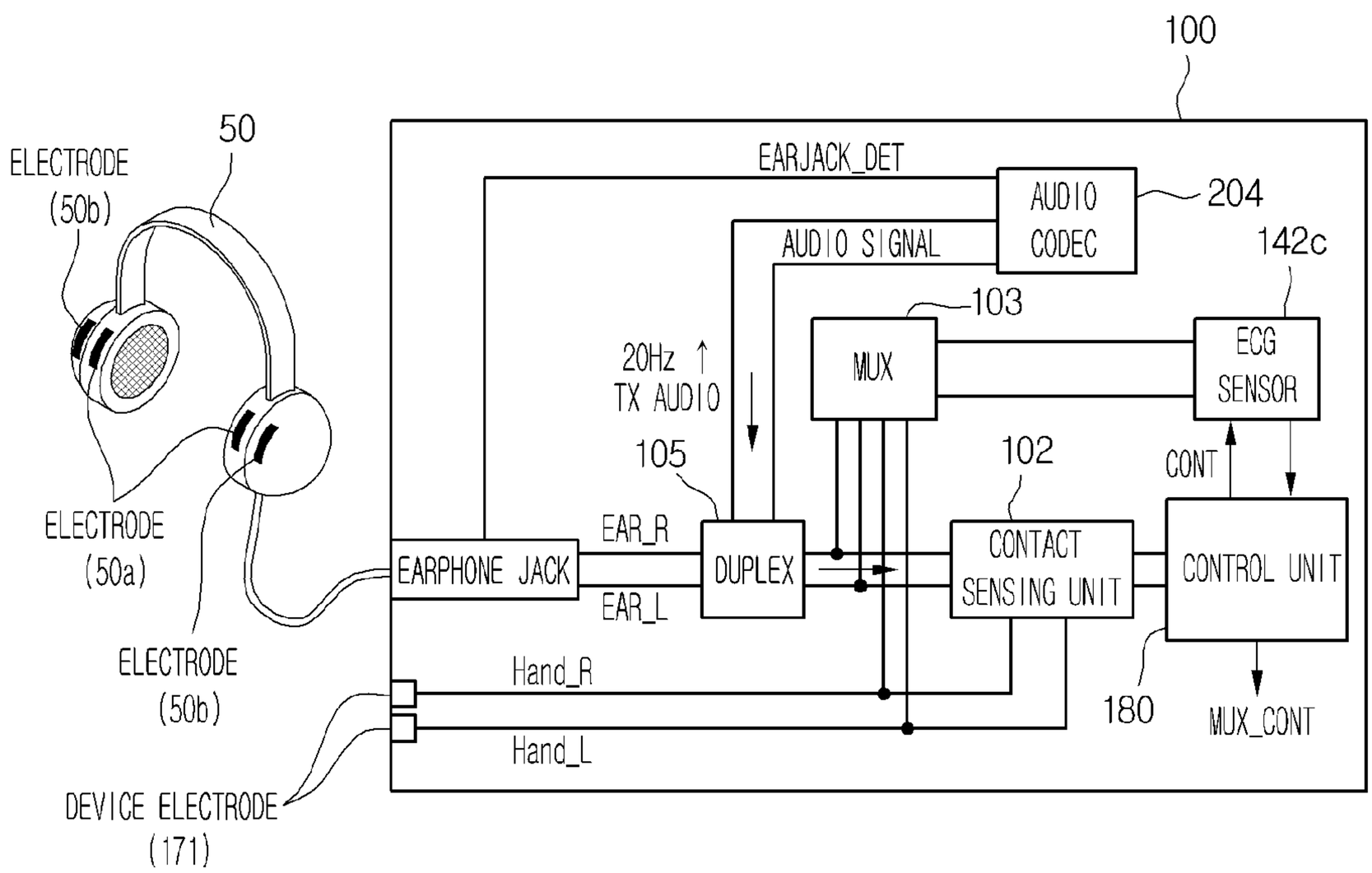
100
50
ELECTRODE
(50b)
EARJACK_DET
AUDIO
CODEC
204
AUDIO SIGNAL
142c
103
MUX
ECG
SENSOR
20Hz ↑
TX AUDIO
105
102
CONT
ELECTRODE
(50a)
EAR_R
EARPHONE JACK
DUPLEX
CONTACT
SENSING UNIT
CONTROL UNIT
EAR_L
ELECTRODE
(50b)
Hand_R
180
MUX_CONT
Hand_L
DEVICE ELECTRODE
(171)

FIG.14

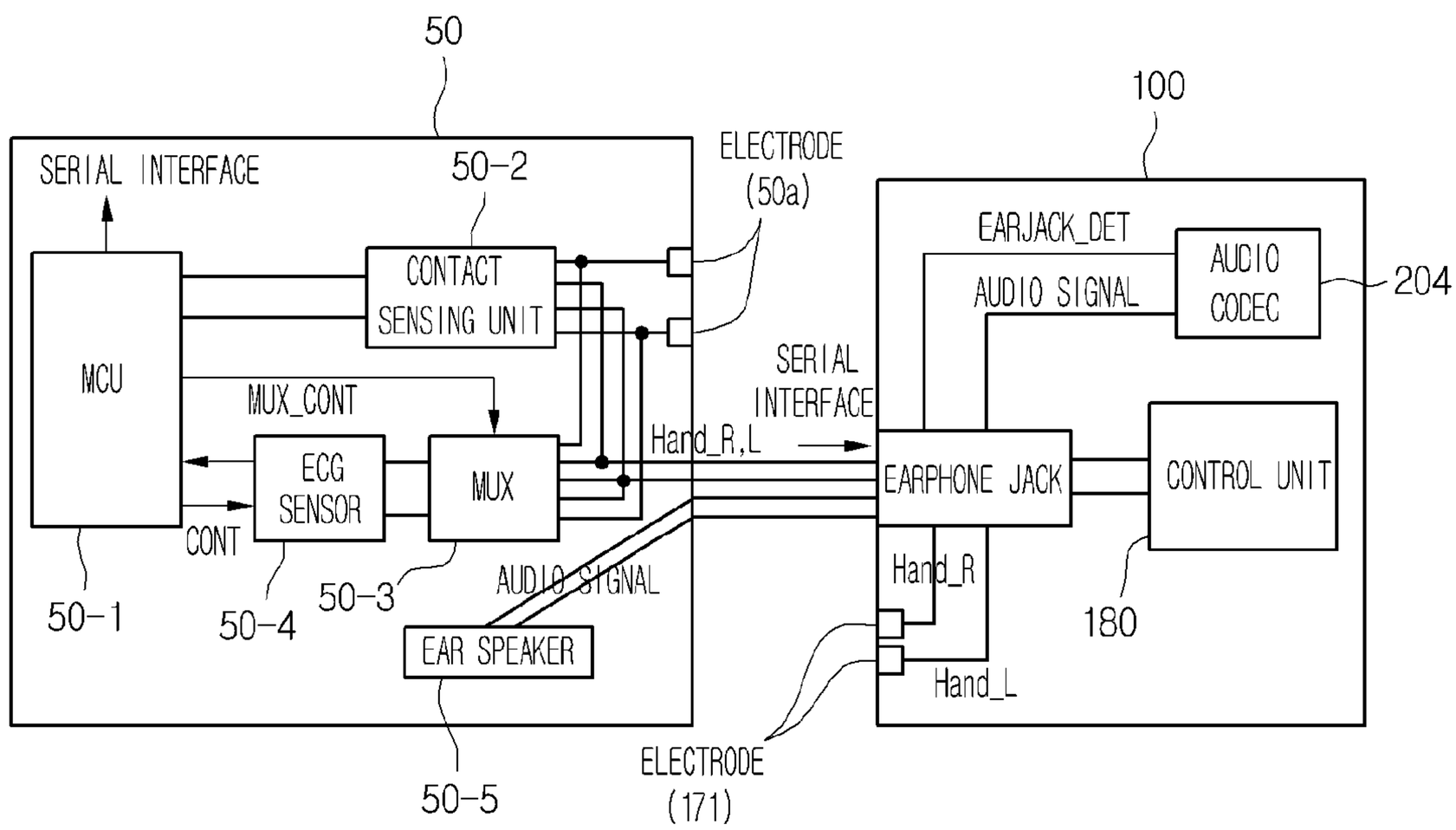
50
100
SERIAL INTERFACE
50-2
ELECTRODE
(50a)
EARJACK_DET
AUDIO SIGNAL
AUDIO CODEC
204
CONTACT SENSING UNIT
MCU
MUX_CONT
SERIAL INTERFACE
Hand_R,L
ECG SENSOR
MUX
EARPHONE JACK
CONTROL UNIT
CONT
AUDIO SIGNAL
Hand_R
50-1
50-4
50-3
180
EAR SPEAKER
Hand_L
ELECTRODE
50-5
(171)

FIG.15

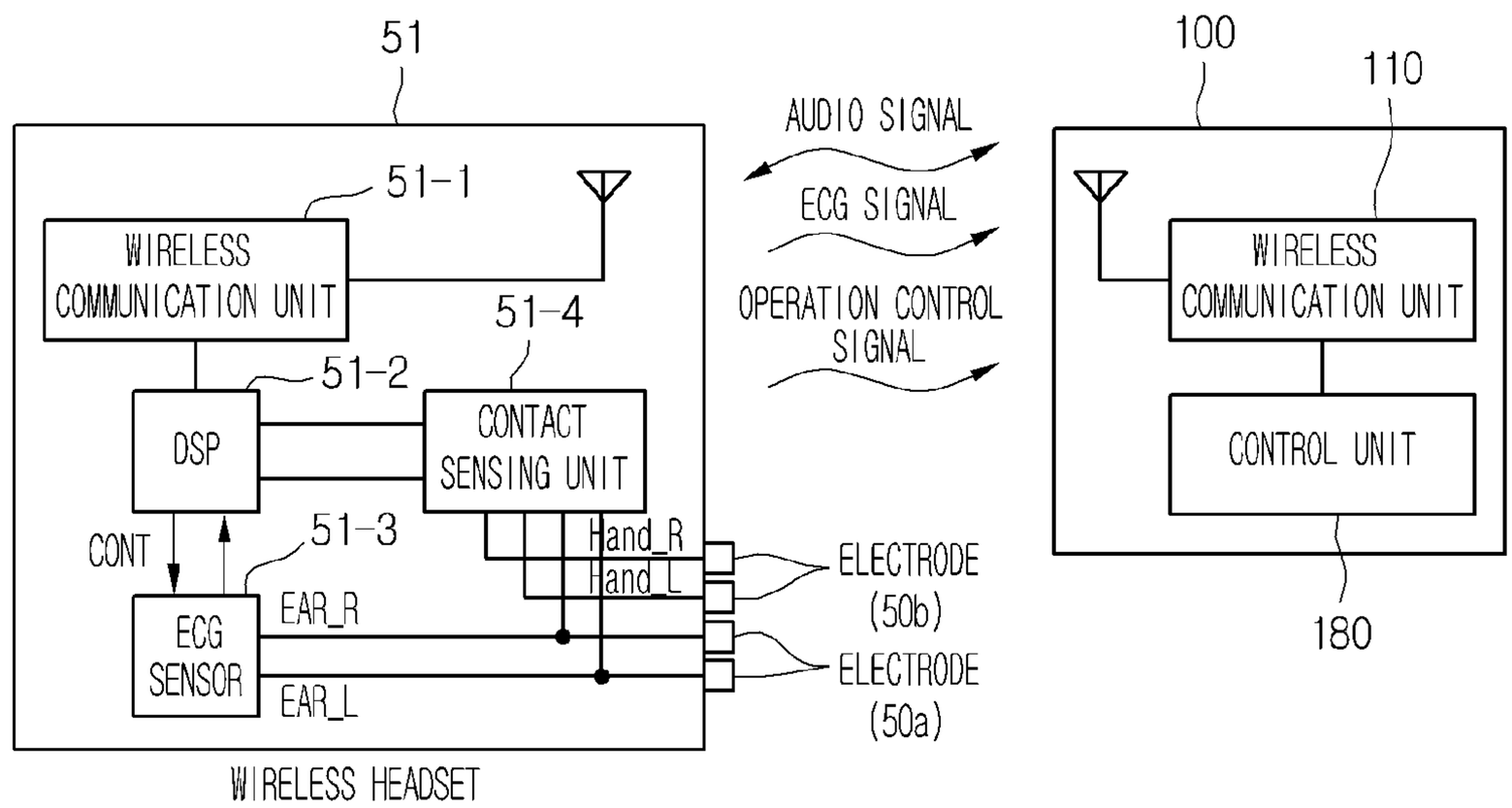
51
51-1
WIRELESS COMMUNICATION UNIT
51-4
51-2
DSP
CONTACT SENSING UNIT
CONT
51-3
Hand_R
Hand_L
EAR_R
ECG SENSOR
EAR_L
ELECTRODE (50b)
ELECTRODE (50a)
WIRELESS HEADSET
AUDIO SIGNAL
ECG SIGNAL
OPERATION CONTROL SIGNAL
100
110
WIRELESS COMMUNICATION UNIT
CONTROL UNIT
180

FIG.16

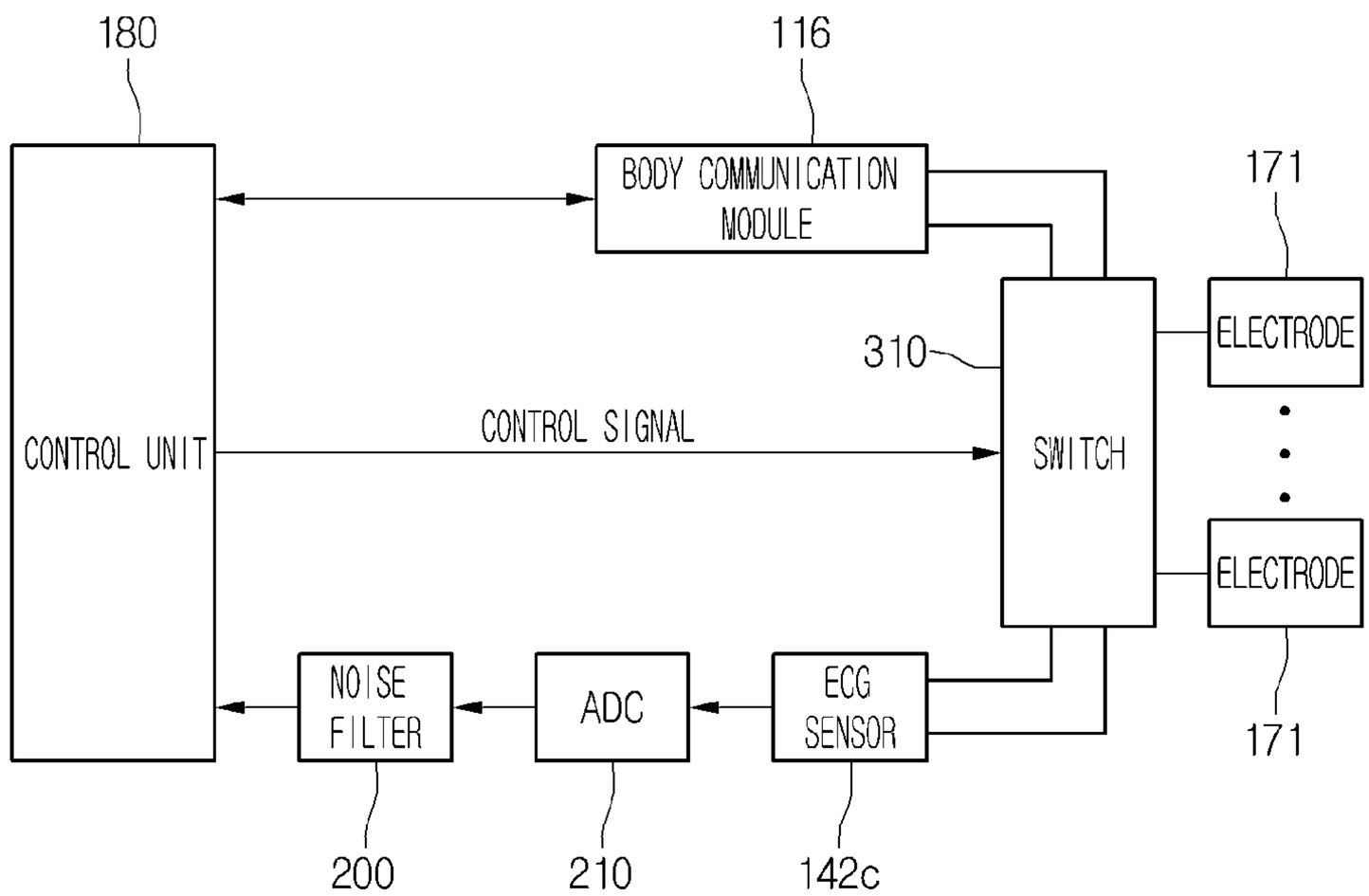
180
116
BODY COMMUNICATION MODULE
171
310
ELECTRODE
CONTROL UNIT
CONTROL SIGNAL
SWITCH
ELECTRODE
NOISE FILTER
ADC
ECG SENSOR
171
200
210
142c

FIG.17

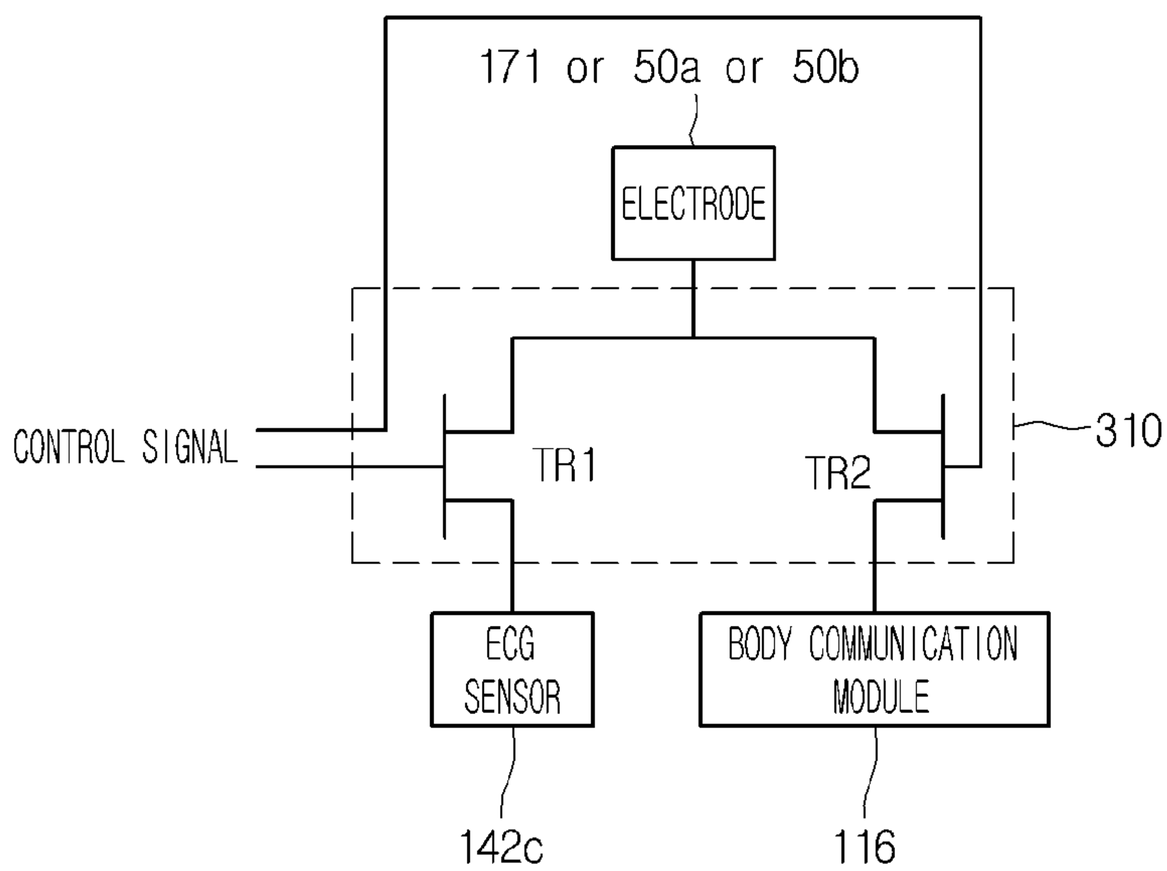
171 or 50a or 50b
ELECTRODE
CONTROL SIGNAL
TR1
TR2
310
ECG SENSOR
BODY COMMUNICATION MODULE
142c
116

FIG.18

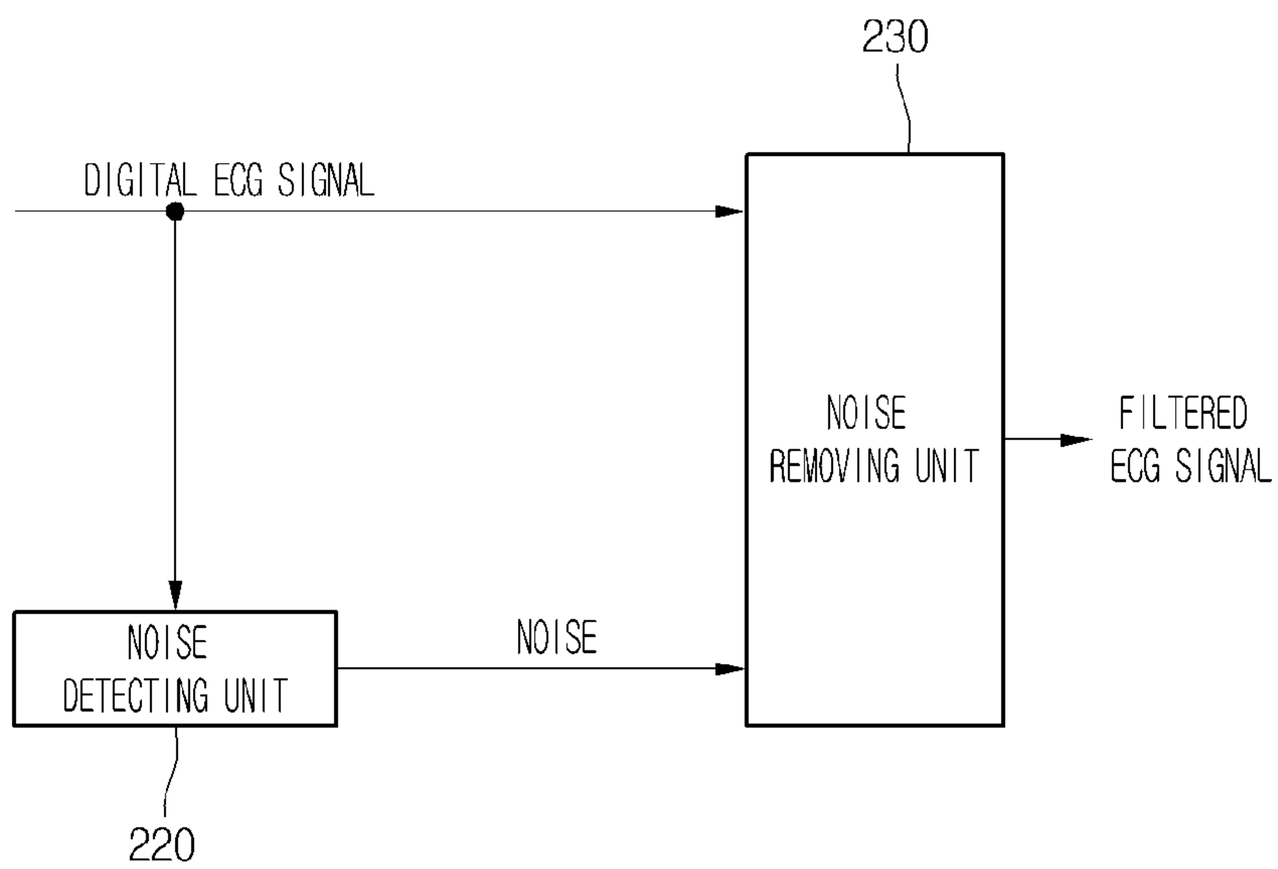
230
DIGITAL ECG SIGNAL
NOISE
REMOVING UNIT
FILTERED
ECG SIGNAL
NOISE
DETECTING UNIT
NOISE
220

FIG.19

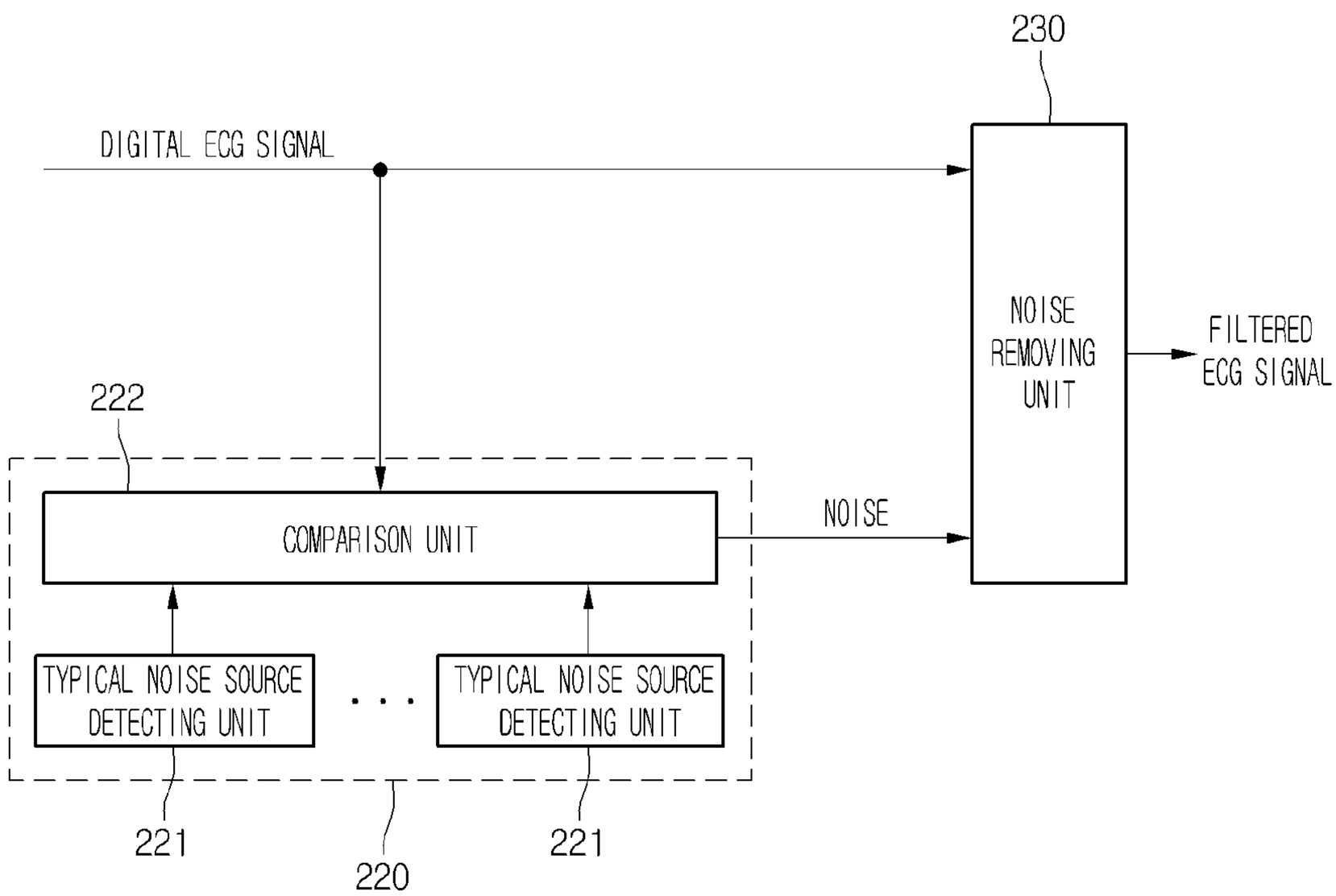
230
DIGITAL ECG SIGNAL
NOISE REMOVING UNIT
FILTERED ECG SIGNAL
222
COMPARISON UNIT
NOISE
TYPICAL NOISE SOURCE DETECTING UNIT
. . .
TYPICAL NOISE SOURCE DETECTING UNIT
221
221
220

FIG.20

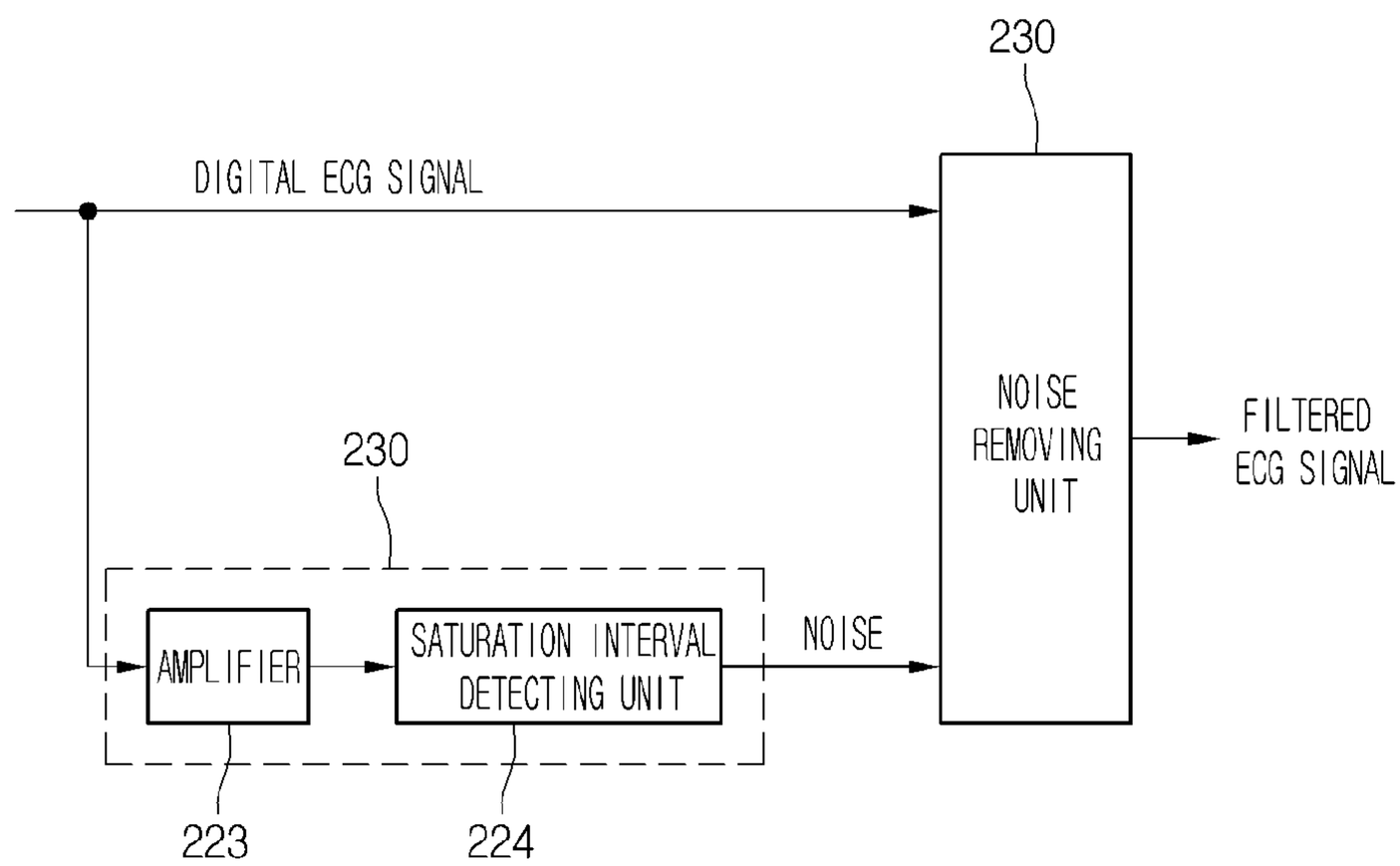
230
DIGITAL ECG SIGNAL
NOISE REMOVING UNIT
FILTERED ECG SIGNAL
230
AMPLIFIER
SATURATION INTERVAL DETECTING UNIT
NOISE
223
224

FIG.21

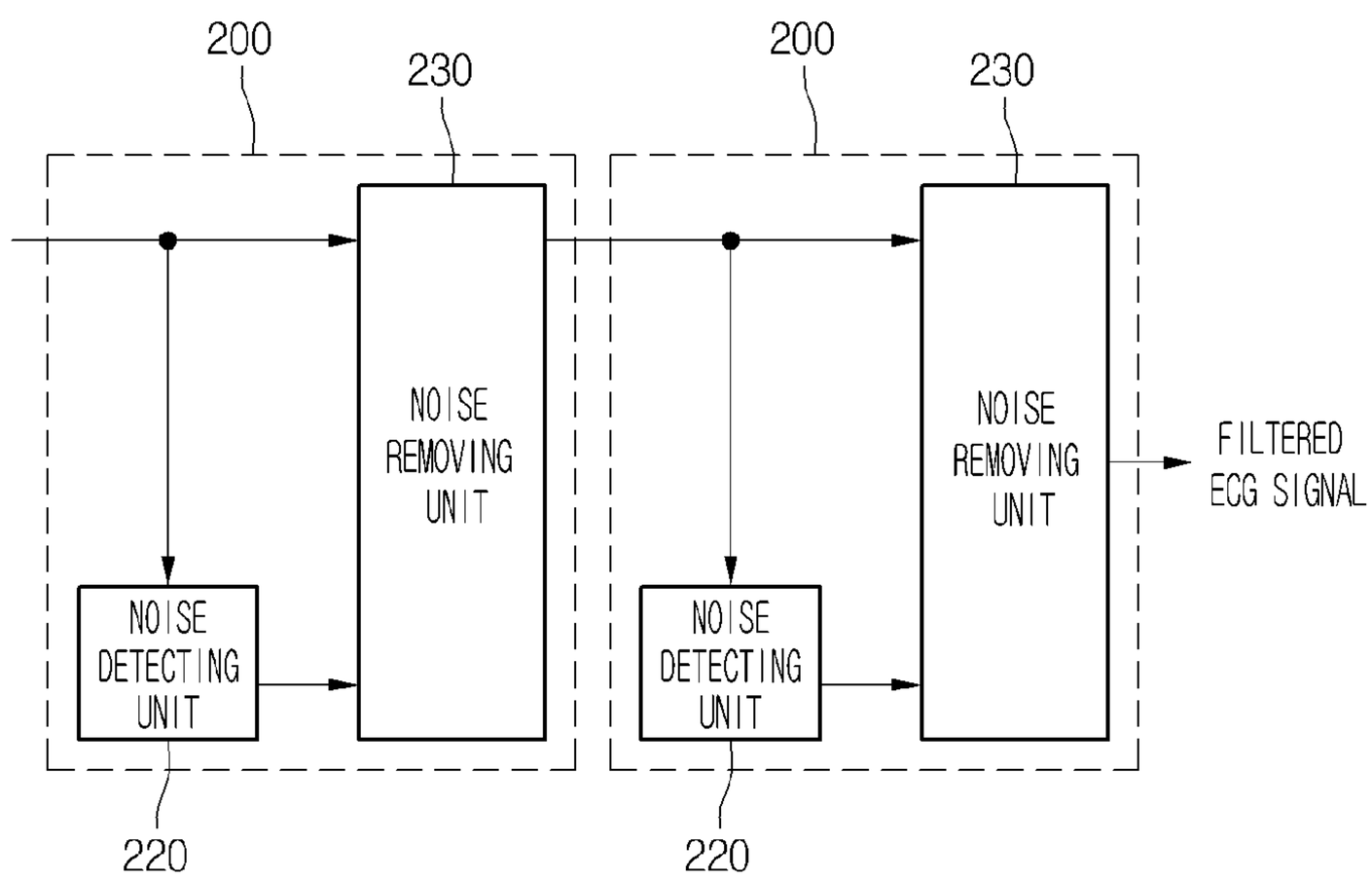
200
230
200
230
NOISE REMOVING UNIT
NOISE REMOVING UNIT
FILTERED ECG SIGNAL
NOISE DETECTING UNIT
NOISE DETECTING UNIT
220
220

FIG.22

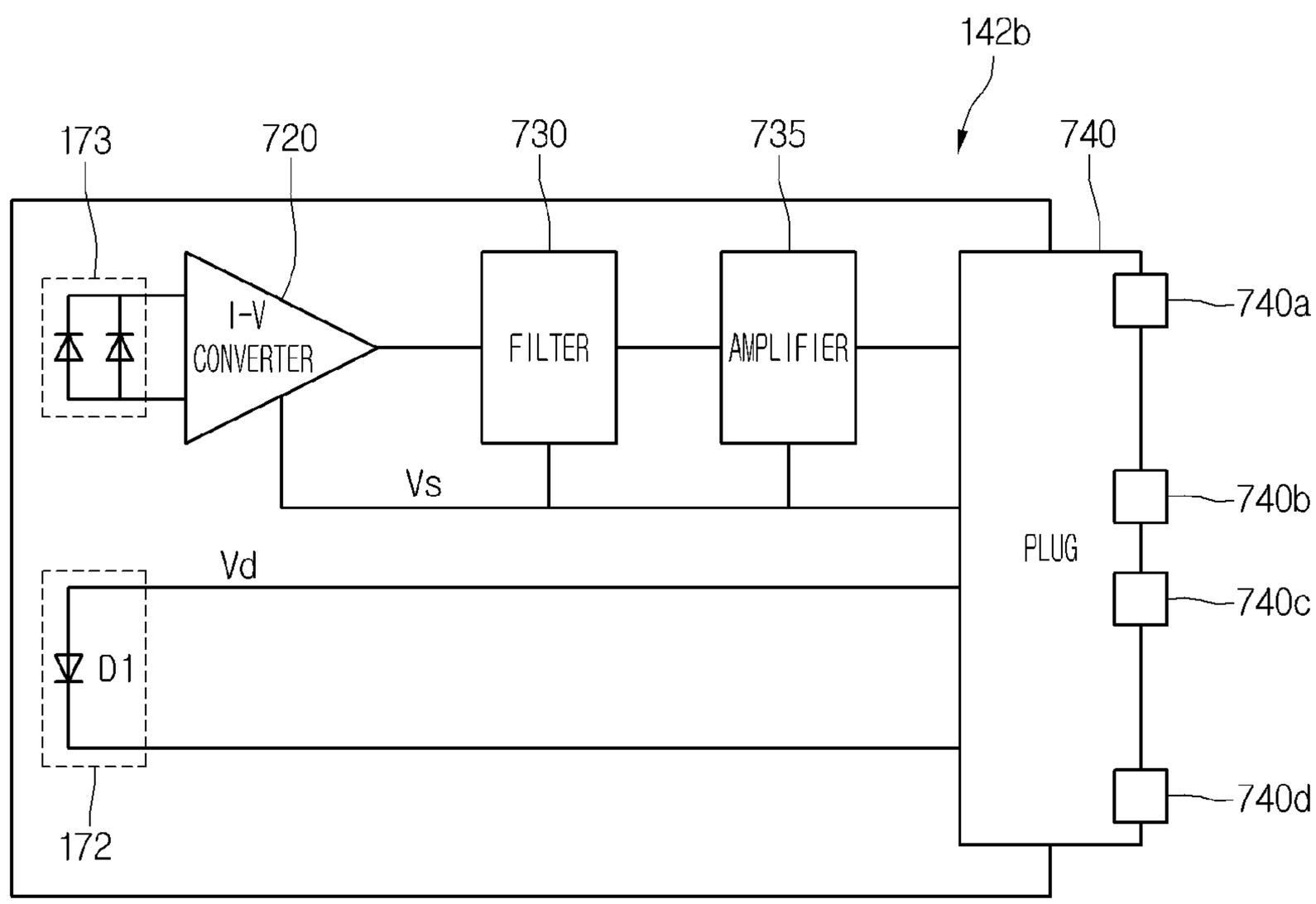
142b
173
720
730
735
740
I-V
CONVERTER
FILTER
AMPLIFIER
PLUG
740a
740b
740c
740d
Vs
Vd
D1
172

FIG.23

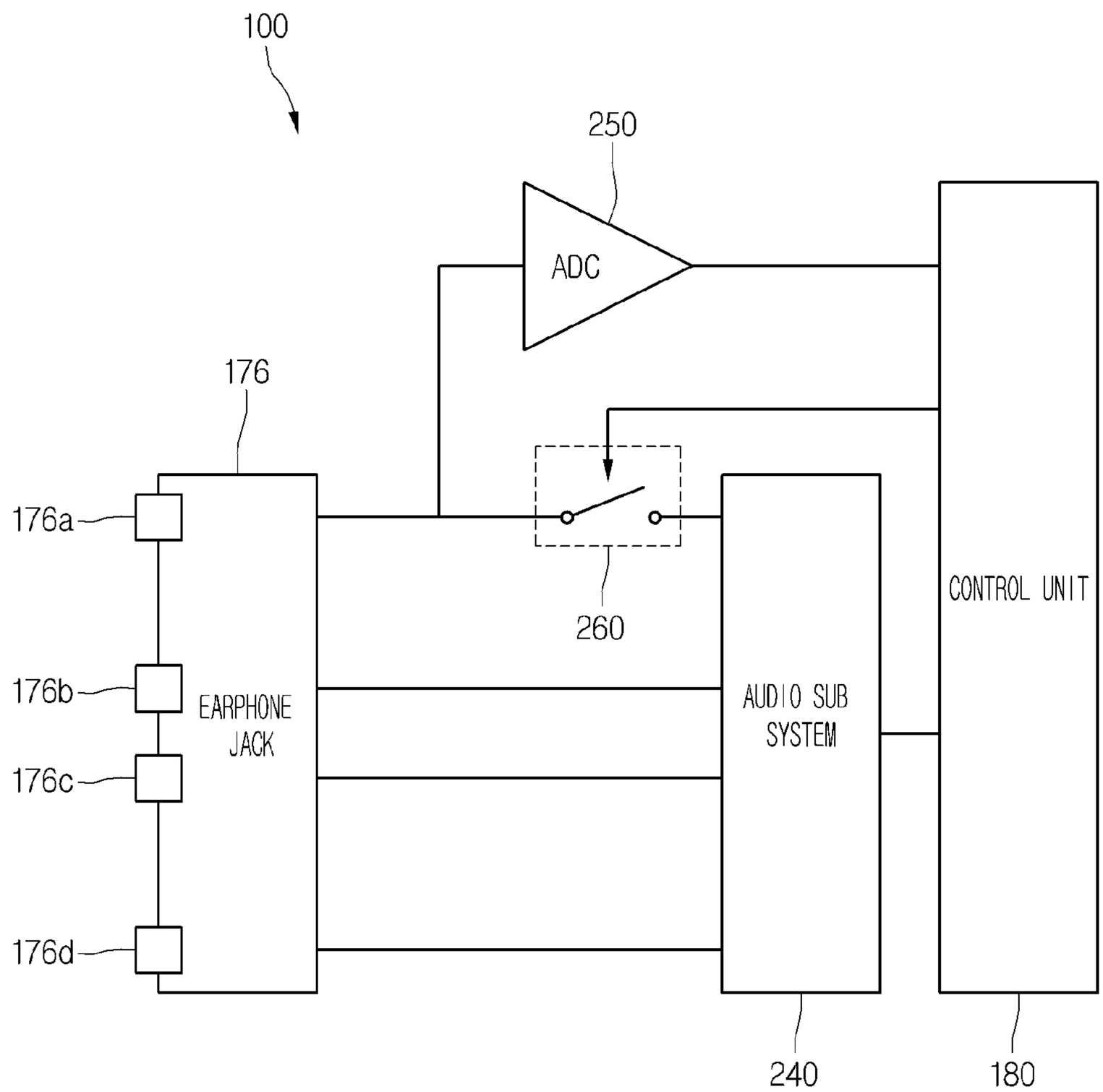
100
250
ADC
176
176a
176b
176c
176d
EARPHONE JACK
260
AUDIO SUB SYSTEM
CONTROL UNIT
240
180

FIG.24

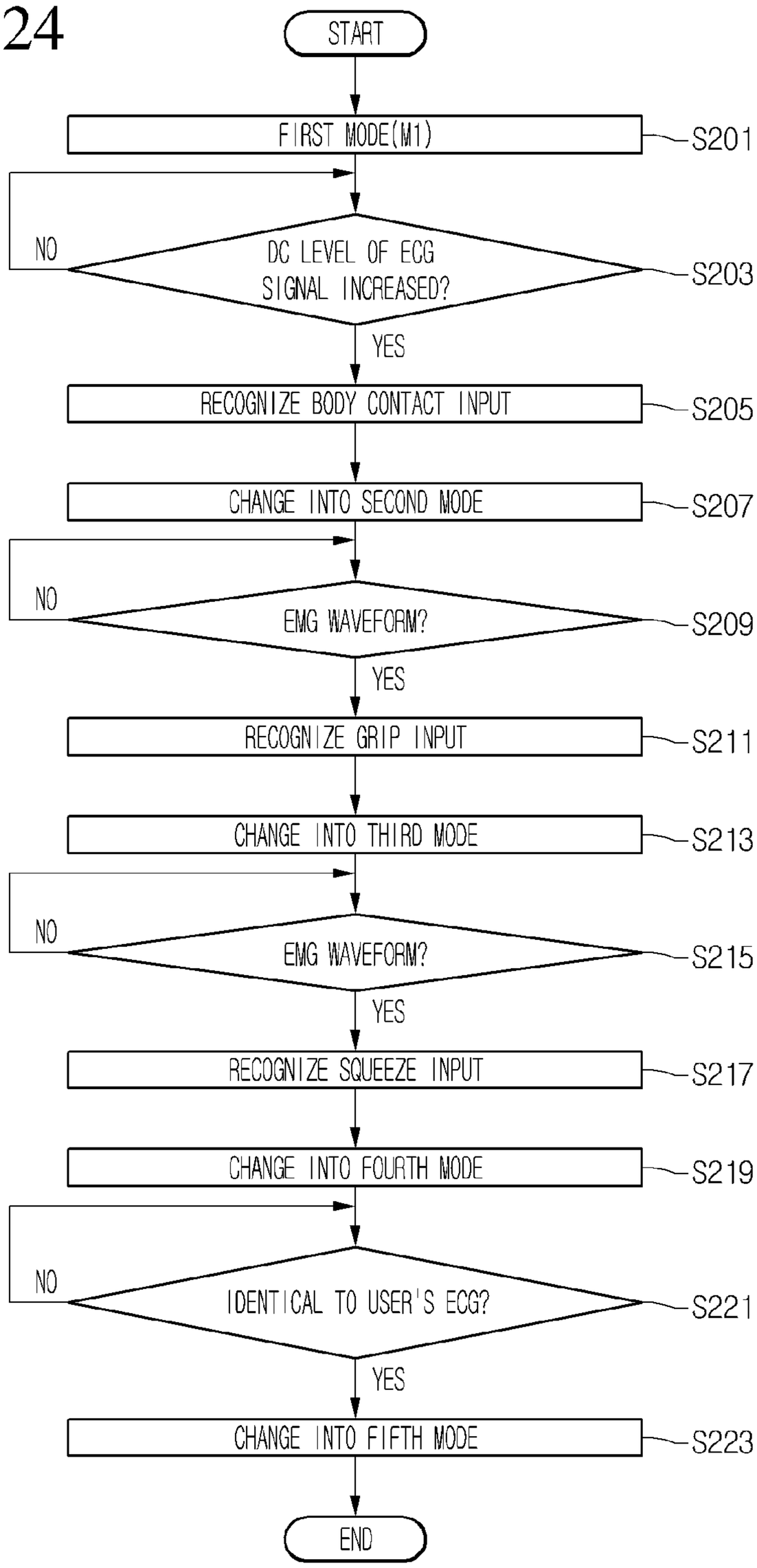
START
FIRST MODE(M1)
S201
NO
DC LEVEL OF ECG SIGNAL INCREASED?
S203
YES
RECOGNIZE BODY CONTACT INPUT
S205
CHANGE INTO SECOND MODE
S207
NO
EMG WAVEFORM?
S209
YES
RECOGNIZE GRIP INPUT
S211
CHANGE INTO THIRD MODE
S213
NO
EMG WAVEFORM?
S215
YES
RECOGNIZE SQUEEZE INPUT
S217
CHANGE INTO FOURTH MODE
S219
NO
IDENTICAL TO USER'S ECG?
S221
YES
CHANGE INTO FIFTH MODE
S223
END

FIG.25

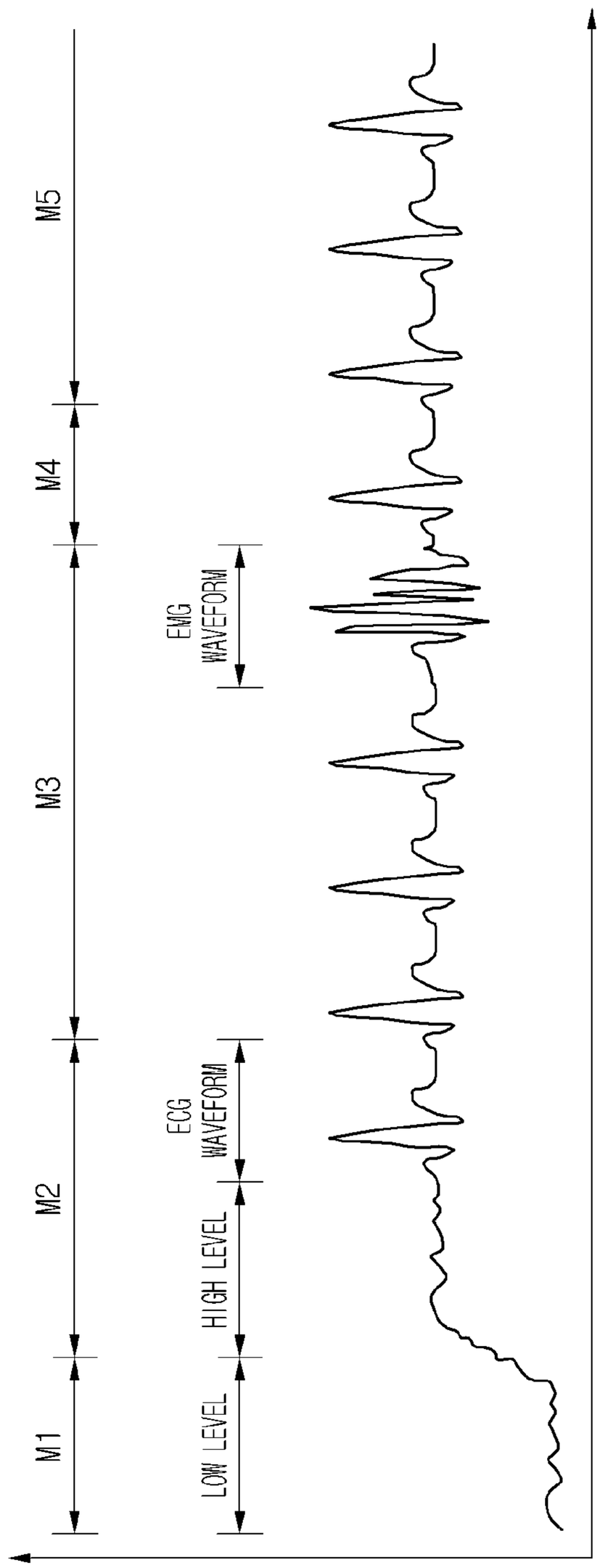

FIG.26

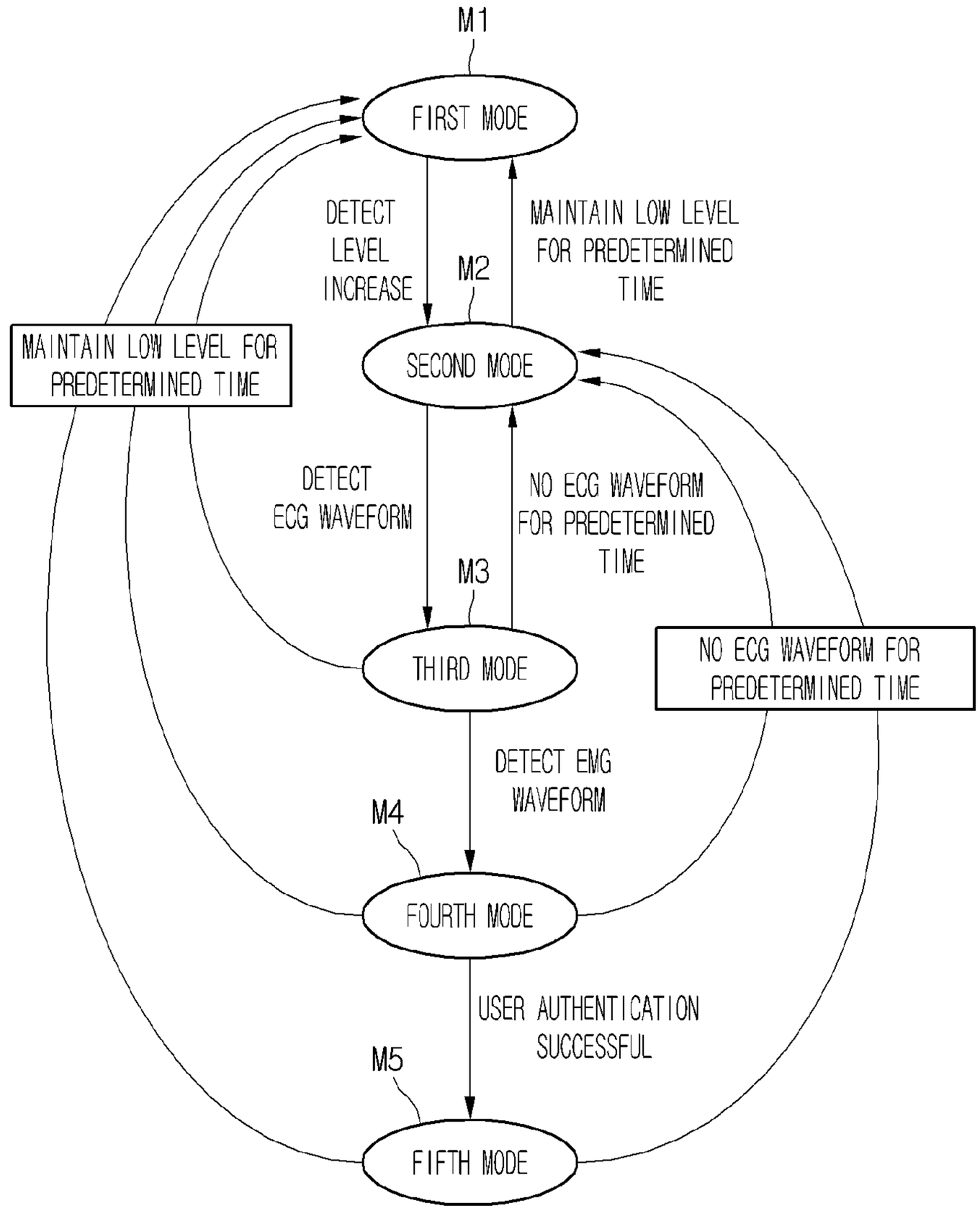
M1
FIRST MODE
DETECT LEVEL INCREASE
M2
MAINTAIN LOW LEVEL FOR PREDETERMINED TIME
MAINTAIN LOW LEVEL FOR PREDETERMINED TIME
SECOND MODE
DETECT ECG WAVEFORM
NO ECG WAVEFORM FOR PREDETERMINED TIME
M3
THIRD MODE
NO ECG WAVEFORM FOR PREDETERMINED TIME
DETECT EMG WAVEFORM
M4
FOURTH MODE
USER AUTHENTICATION SUCCESSFUL
M5
FIFTH MODE

FIG.27

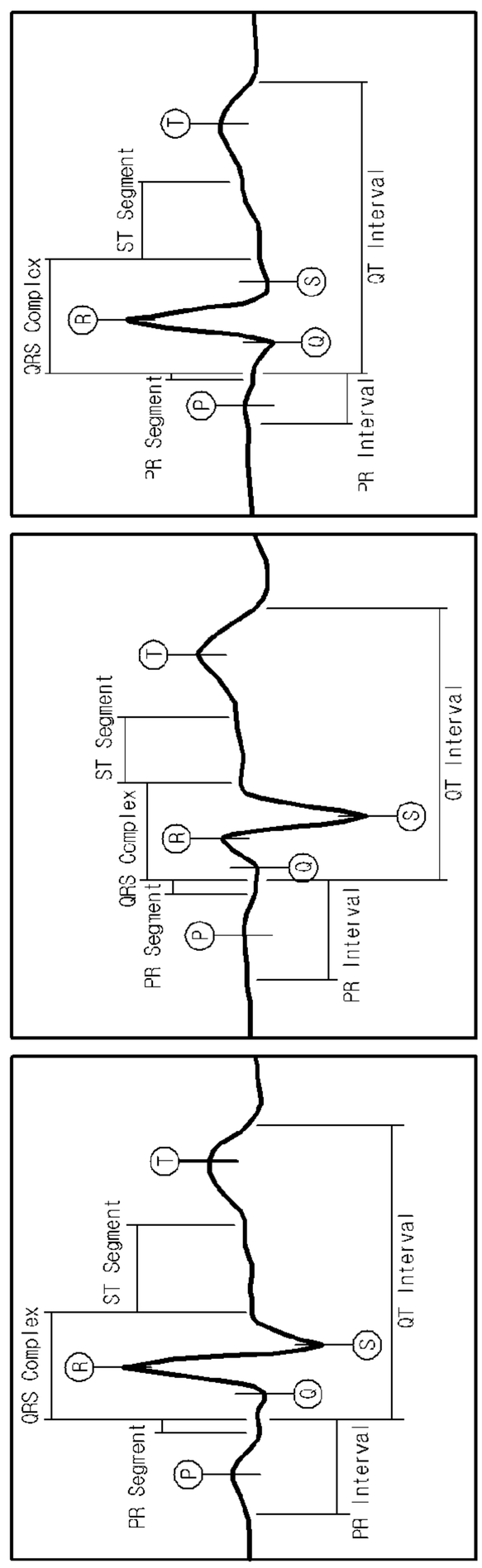

Heart Rate	64	57	54
PR Interval	0.14 sec	0.14 sec	0.07 sec
PR Complex	0.02 sec	0.02 sec	0.01 sec
QRS Complex	0.15 sec	0.14 sec	0.16 sec
ST Segment	0.08 sec	0.10 sec	0.11 sec
QT Interval	0.41 sec	0.39 sec	0.42 sec

FIG.28

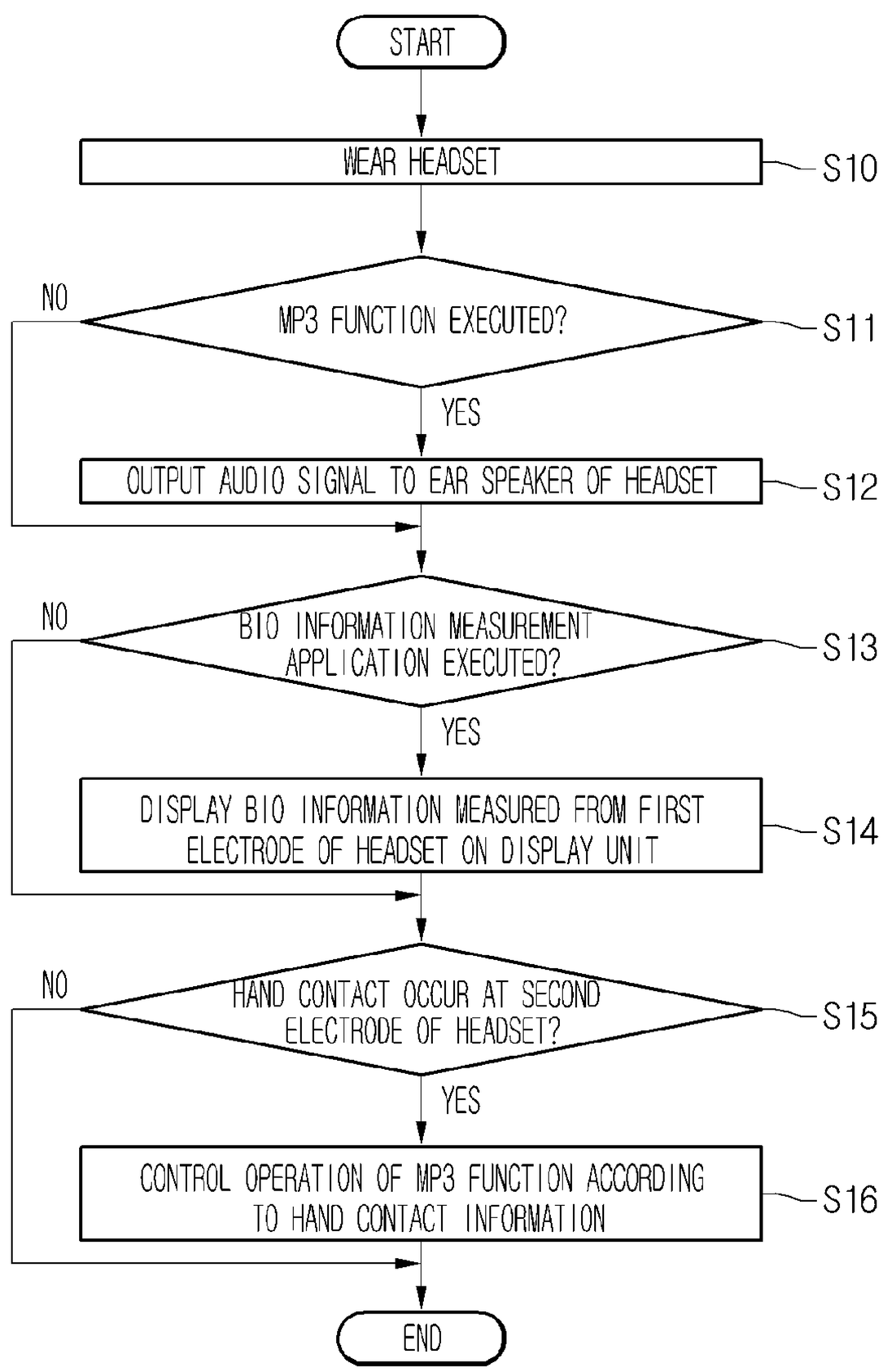
START
WEAR HEADSET
S10
MP3 FUNCTION EXECUTED?
S11
NO
YES
OUTPUT AUDIO SIGNAL TO EAR SPEAKER OF HEADSET
S12
BIO INFORMATION MEASUREMENT APPLICATION EXECUTED?
S13
NO
YES
DISPLAY BIO INFORMATION MEASURED FROM FIRST ELECTRODE OF HEADSET ON DISPLAY UNIT
S14
HAND CONTACT OCCUR AT SECOND ELECTRODE OF HEADSET?
S15
NO
YES
CONTROL OPERATION OF MP3 FUNCTION ACCORDING TO HAND CONTACT INFORMATION
S16
END

FIG.29

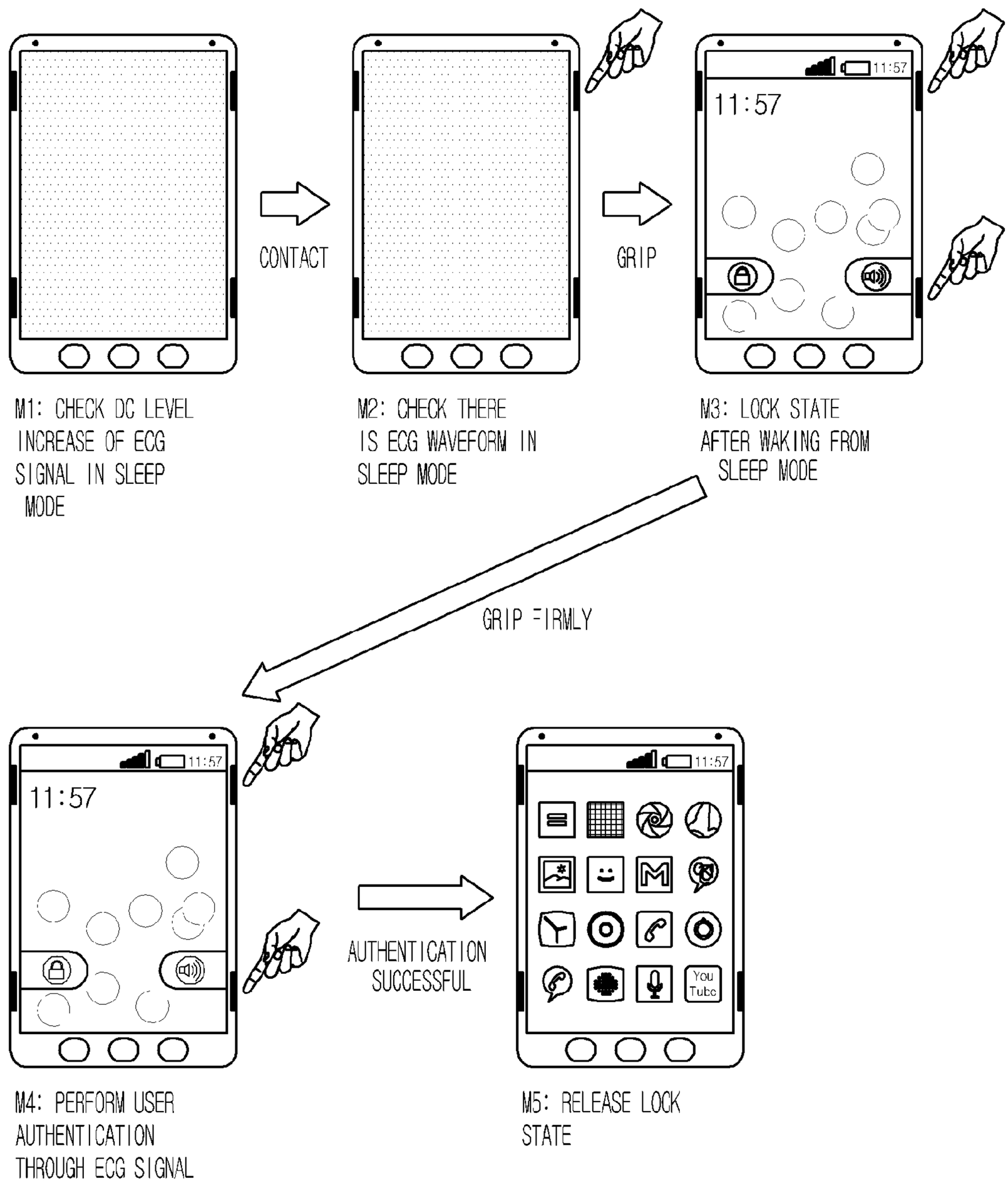
CONTACT
GRIP
11:57
M1: CHECK DC LEVEL INCREASE OF ECG SIGNAL IN SLEEP MODE
M2: CHECK THERE IS ECG WAVEFORM IN SLEEP MODE
M3: LOCK STATE AFTER WAKING FROM SLEEP MODE
GRIP FIRMLY
AUTHENTICATION SUCCESSFUL
You Tube
M4: PERFORM USER AUTHENTICATION THROUGH ECG SIGNAL
M5: RELEASE LOCK STATE

FIG.30

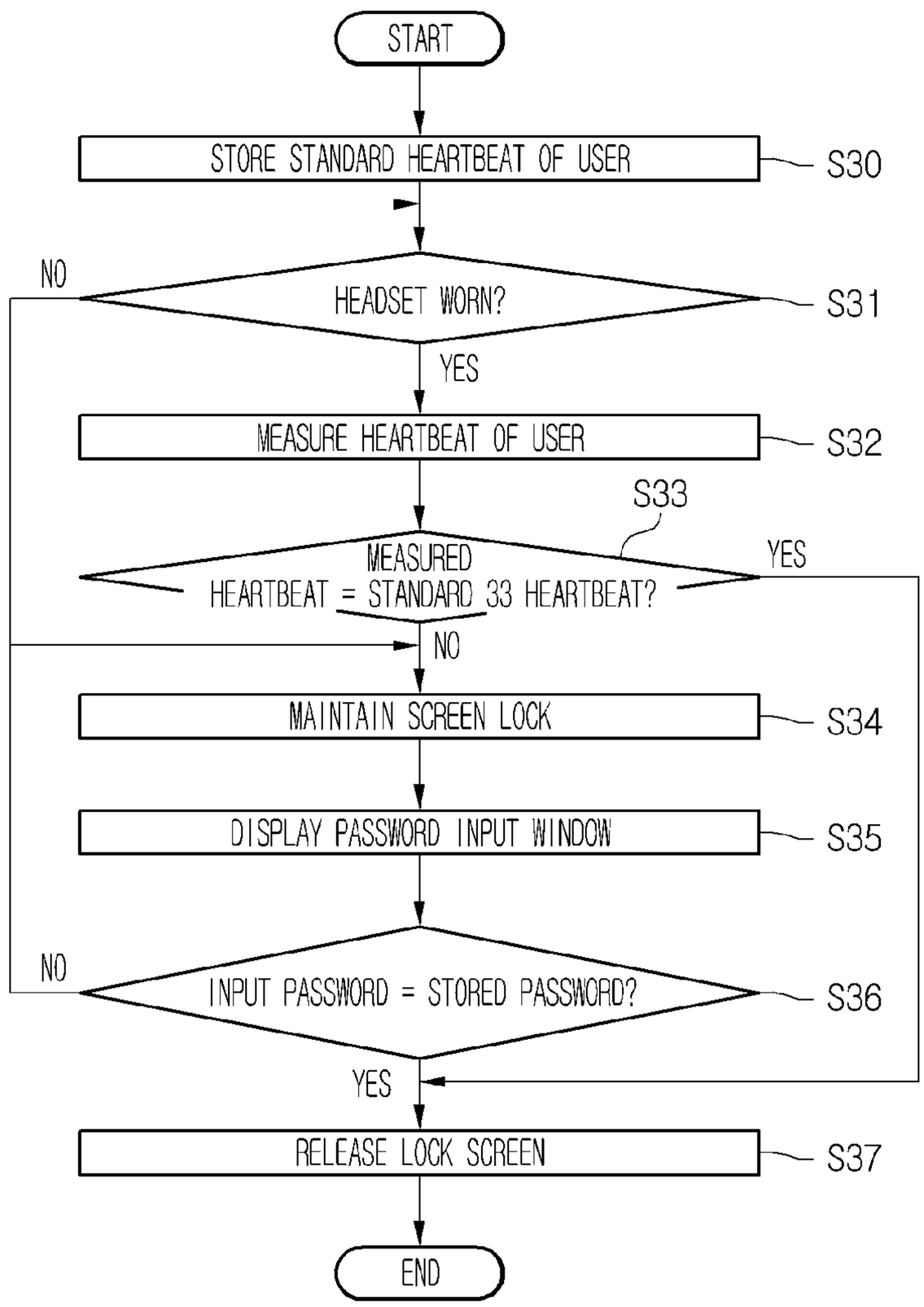
START
STORE STANDARD HEARTBEAT OF USER
S30
HEADSET WORN?
S31
NO
YES
MEASURE HEARTBEAT OF USER
S32
S33
MEASURED HEARTBEAT = STANDARD 33 HEARTBEAT?
YES
NO
MAINTAIN SCREEN LOCK
S34
DISPLAY PASSWORD INPUT WINDOW
S35
INPUT PASSWORD = STORED PASSWORD?
S36
NO
YES
RELEASE LOCK SCREEN
S37
END

FIG.31

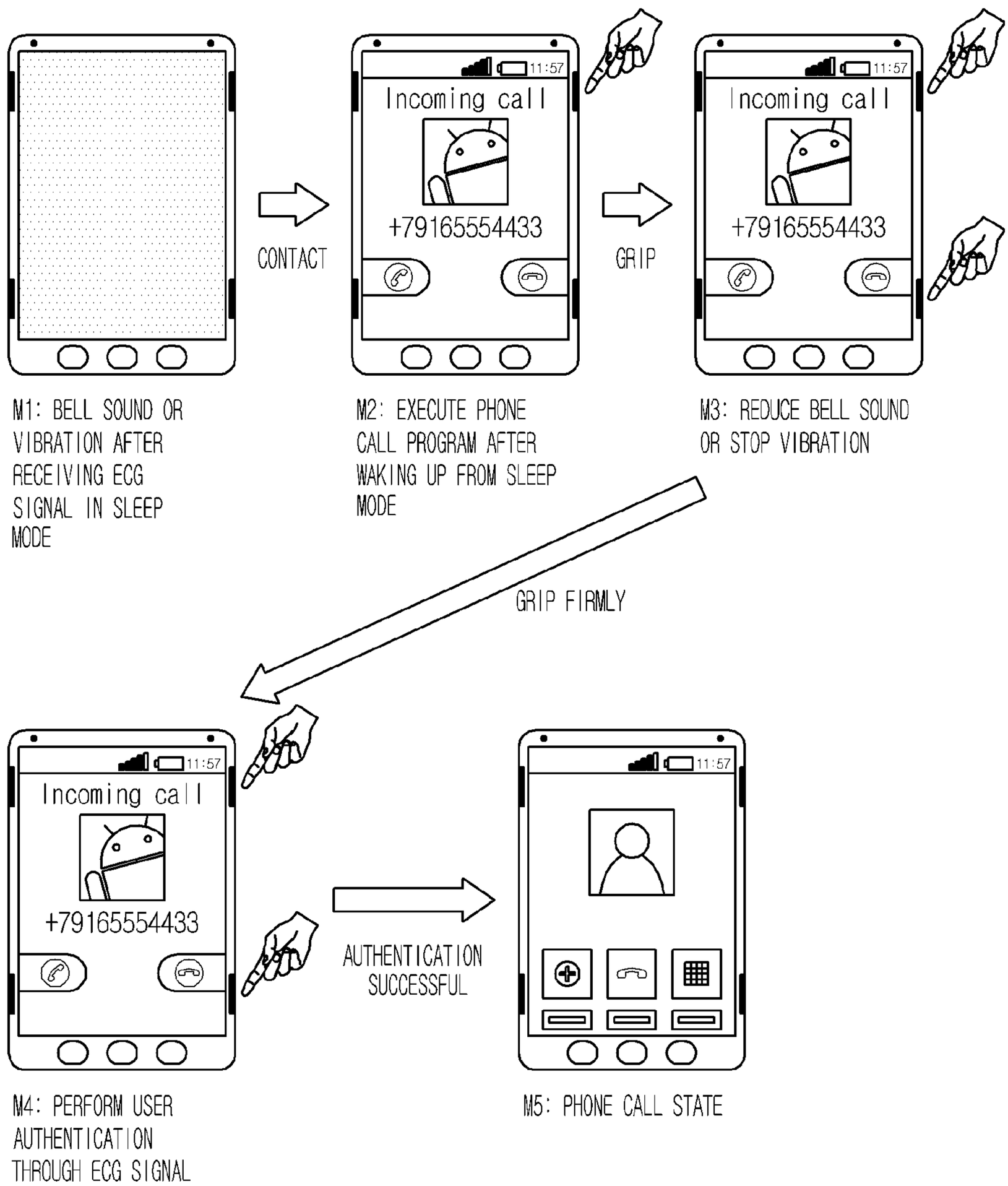
11:57
Incoming call
+79165554433
CONTACT
GRIP
M1: BELL SOUND OR VIBRATION AFTER RECEIVING ECG SIGNAL IN SLEEP MODE
M2: EXECUTE PHONE CALL PROGRAM AFTER WAKING UP FROM SLEEP MODE
M3: REDUCE BELL SOUND OR STOP VIBRATION
GRIP FIRMLY
AUTHENTICATION SUCCESSFUL
M4: PERFORM USER AUTHENTICATION THROUGH ECG SIGNAL
M5: PHONE CALL STATE

FIG.32

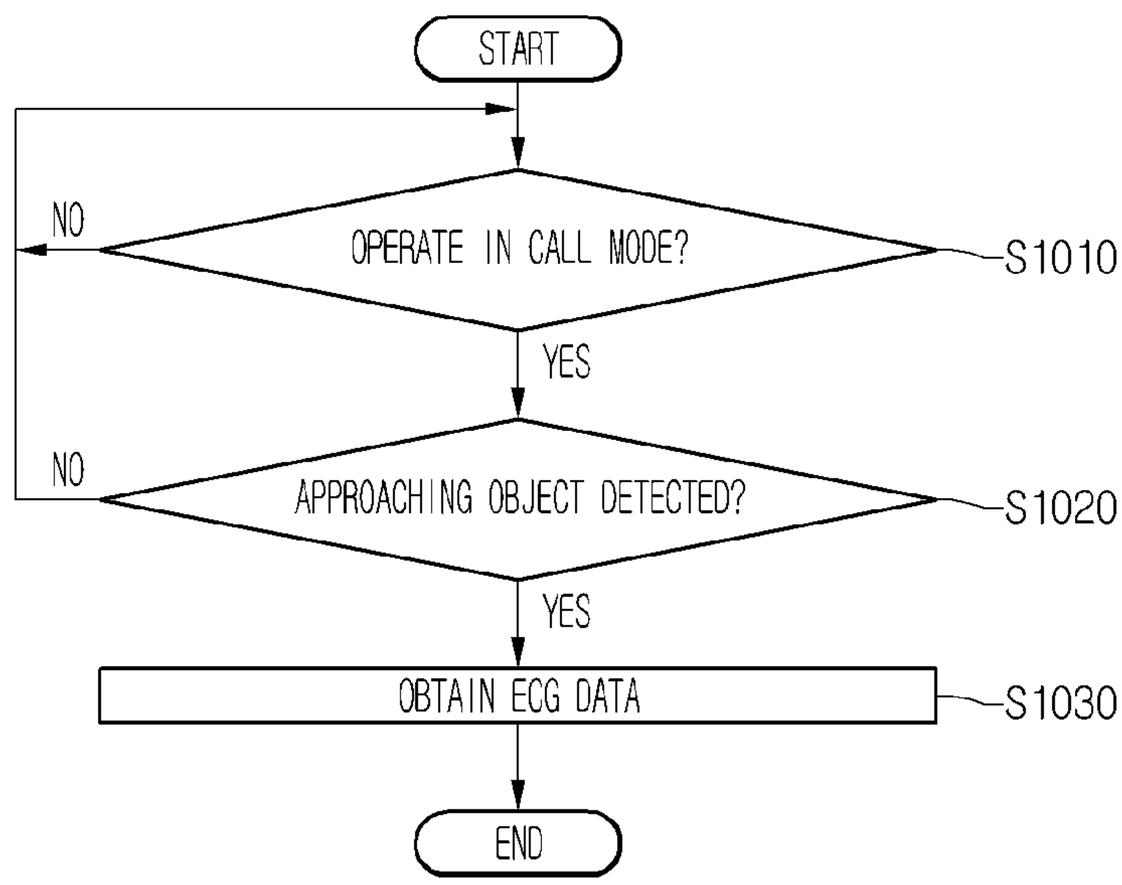
START
OPERATE IN CALL MODE?
S1010
NO
YES
APPROACHING OBJECT DETECTED?
S1020
NO
YES
OBTAIN ECG DATA
S1030
END

FIG.33

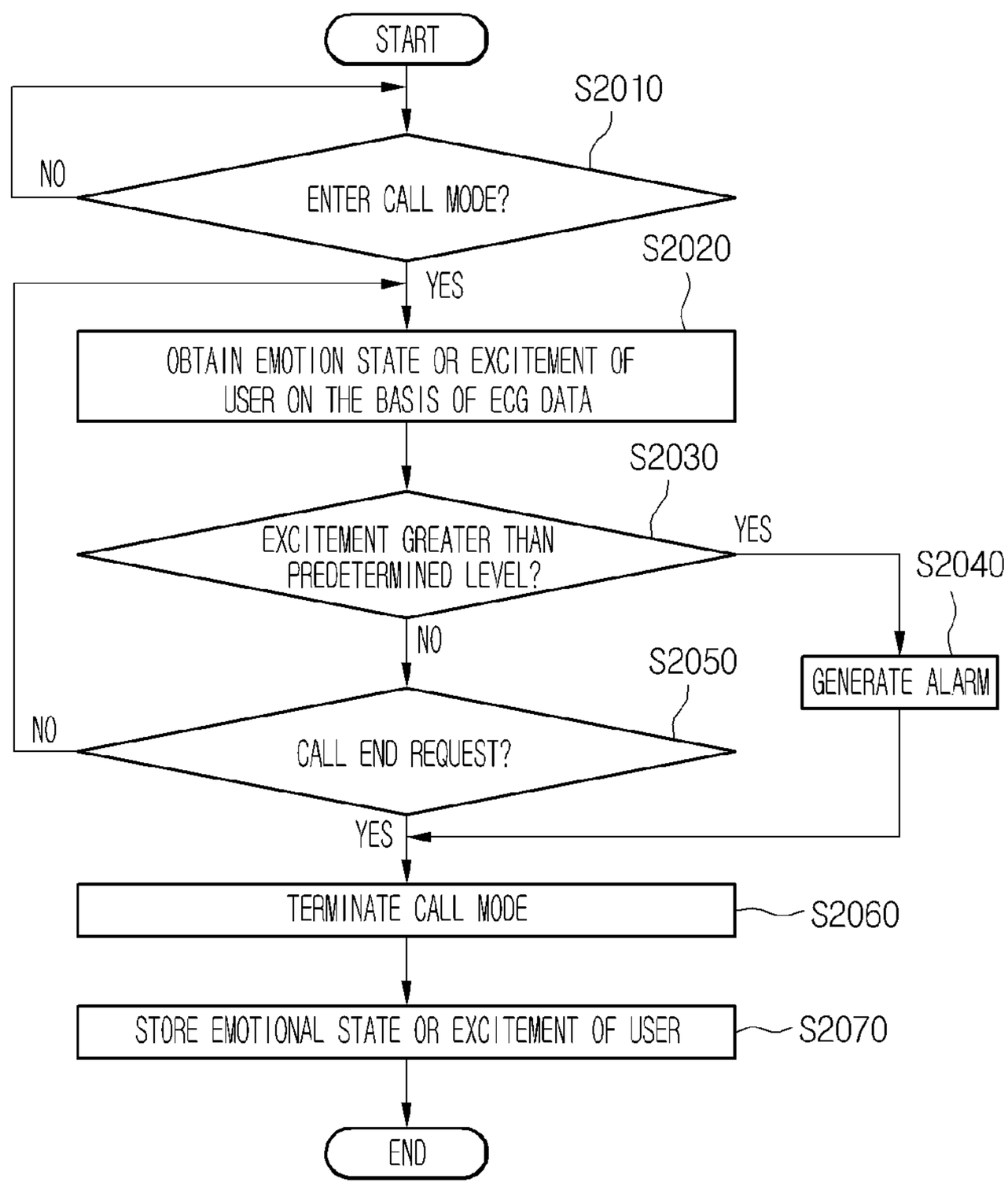
START
S2010
ENTER CALL MODE?
NO
YES
S2020
OBTAIN EMOTION STATE OR EXCITEMENT OF USER ON THE BASIS OF ECG DATA
S2030
EXCITEMENT GREATER THAN PREDETERMINED LEVEL?
YES
S2040
GENERATE ALARM
NO
S2050
CALL END REQUEST?
NO
YES
TERMINATE CALL MODE
S2060
STORE EMOTIONAL STATE OR EXCITEMENT OF USER
S2070
END

FIG.34

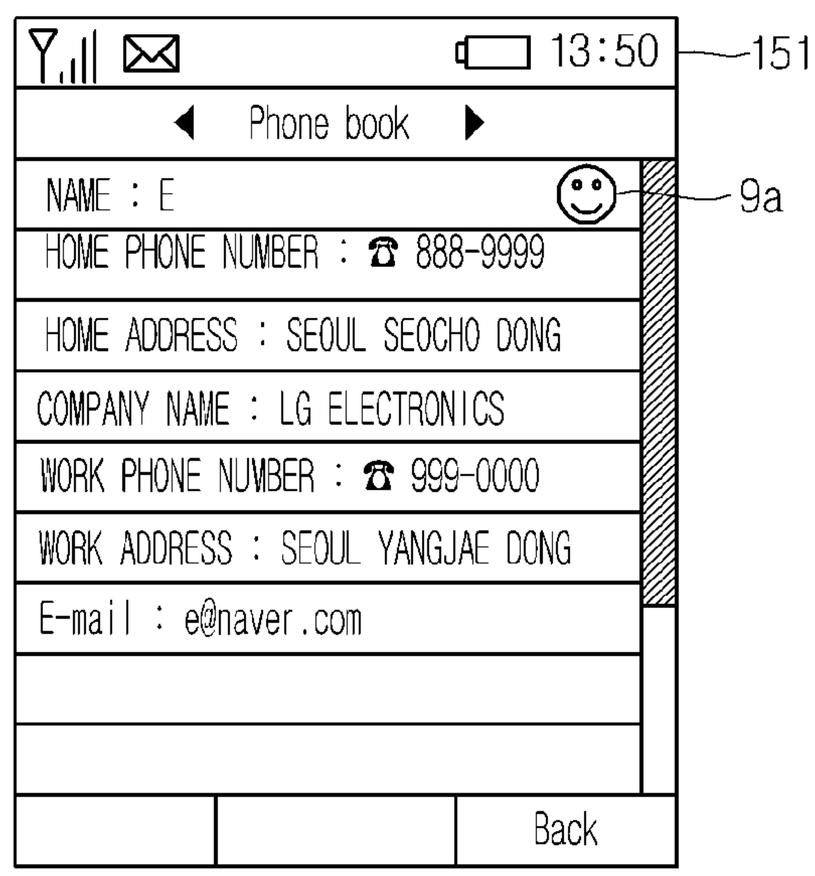
13:50
151
Phone book
NAME : E
9a
HOME PHONE NUMBER : ☎ 888-9999
HOME ADDRESS : SEOUL SEOCHO DONG
COMPANY NAME : LG ELECTRONICS
WORK PHONE NUMBER : ☎ 999-0000
WORK ADDRESS : SEOUL YANGJAE DONG
E-mail : e@naver.com
Back

FIG.35

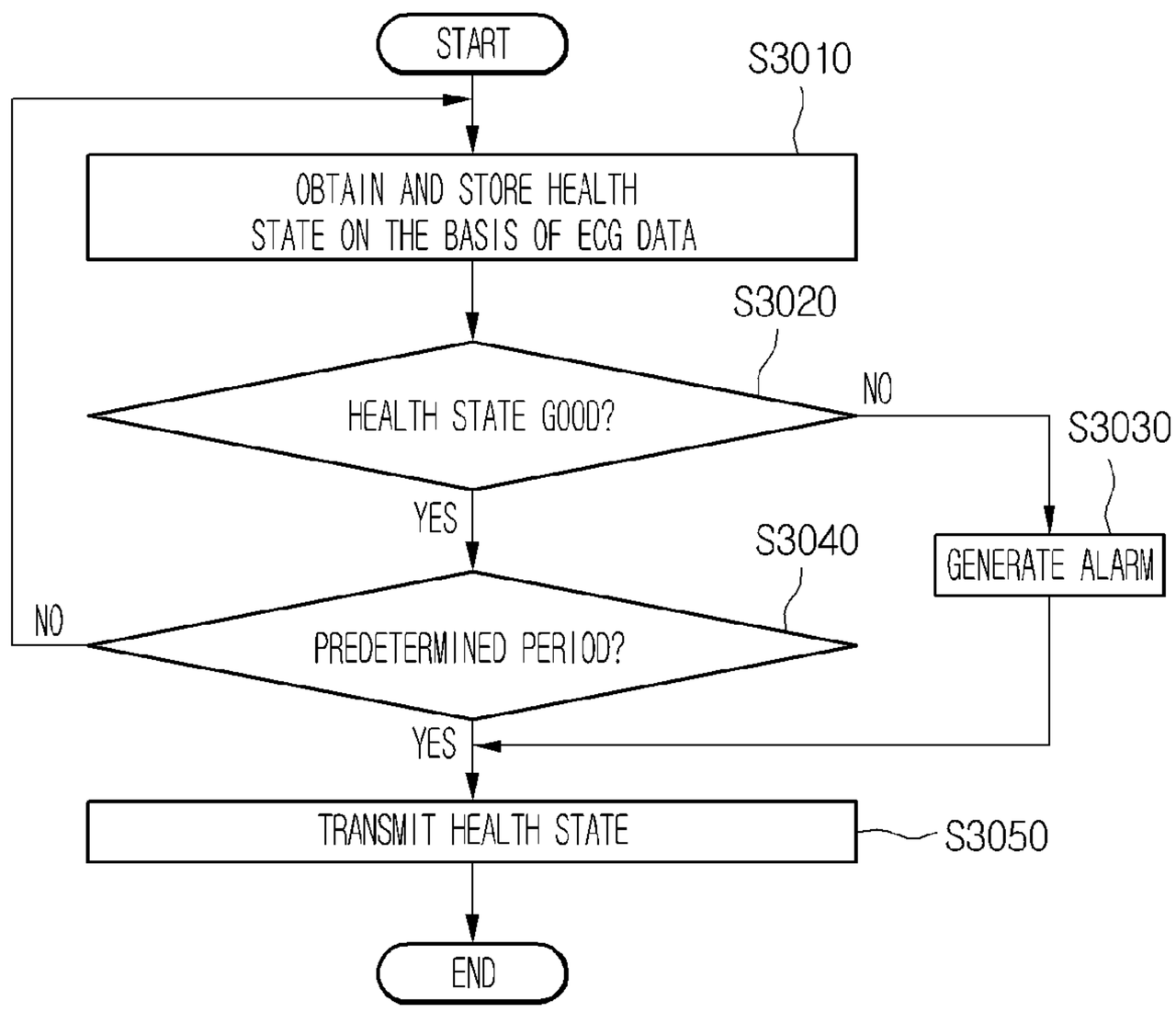
START
S3010
OBTAIN AND STORE HEALTH STATE ON THE BASIS OF ECG DATA
S3020
HEALTH STATE GOOD?
NO
S3030
GENERATE ALARM
YES
S3040
NO
PREDETERMINED PERIOD?
YES
TRANSMIT HEALTH STATE
S3050
END

FIG.36

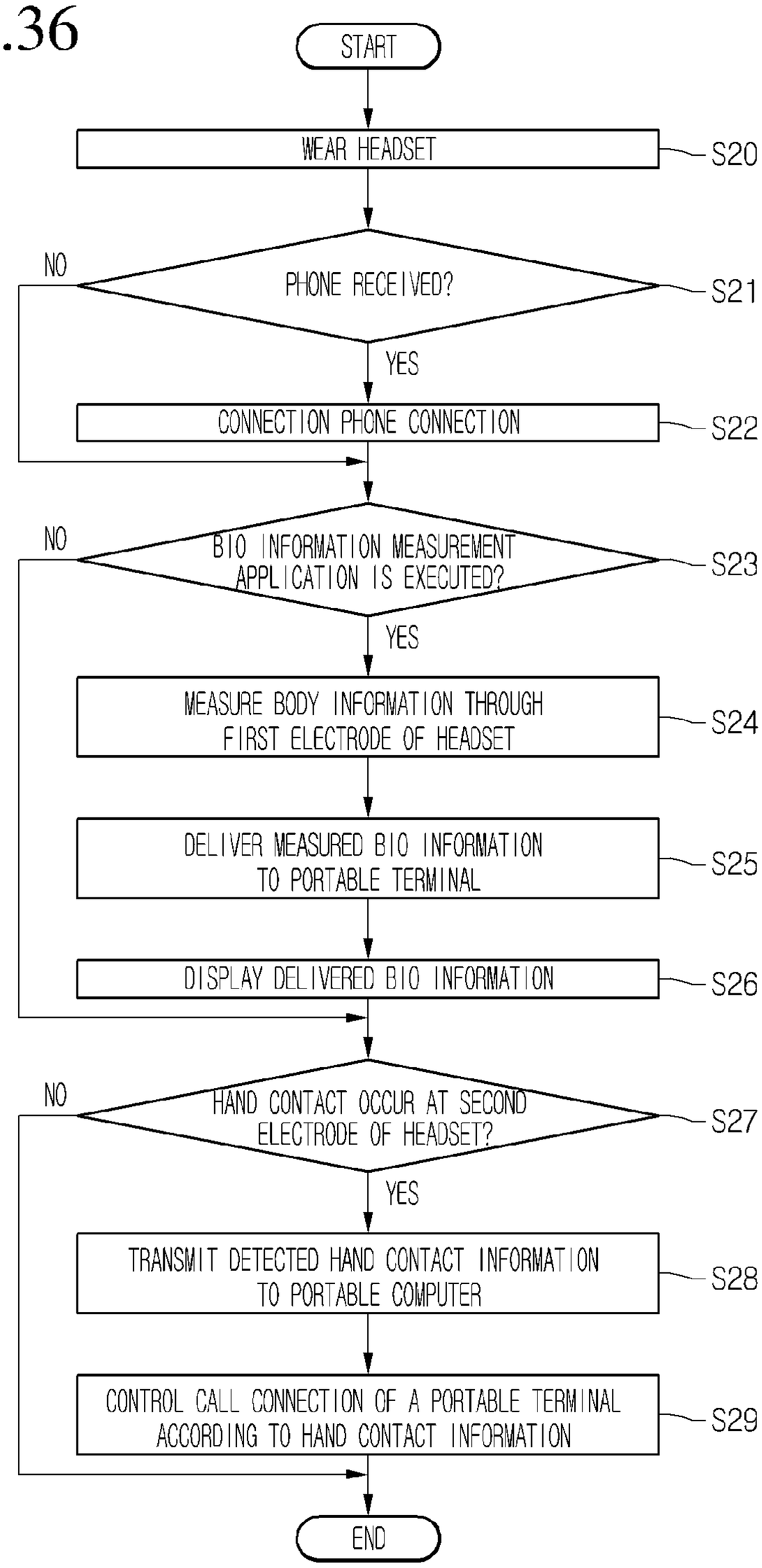
START
WEAR HEADSET
S20
PHONE RECEIVED?
S21
NO
YES
CONNECTION PHONE CONNECTION
S22
BIO INFORMATION MEASUREMENT APPLICATION IS EXECUTED?
S23
NO
YES
MEASURE BODY INFORMATION THROUGH FIRST ELECTRODE OF HEADSET
S24
DELIVER MEASURED BIO INFORMATION TO PORTABLE TERMINAL
S25
DISPLAY DELIVERED BIO INFORMATION
S26
HAND CONTACT OCCUR AT SECOND ELECTRODE OF HEADSET?
S27
NO
YES
TRANSMIT DETECTED HAND CONTACT INFORMATION TO PORTABLE COMPUTER
S28
CONTROL CALL CONNECTION OF A PORTABLE TERMINAL ACCORDING TO HAND CONTACT INFORMATION
S29
END

FIG.37

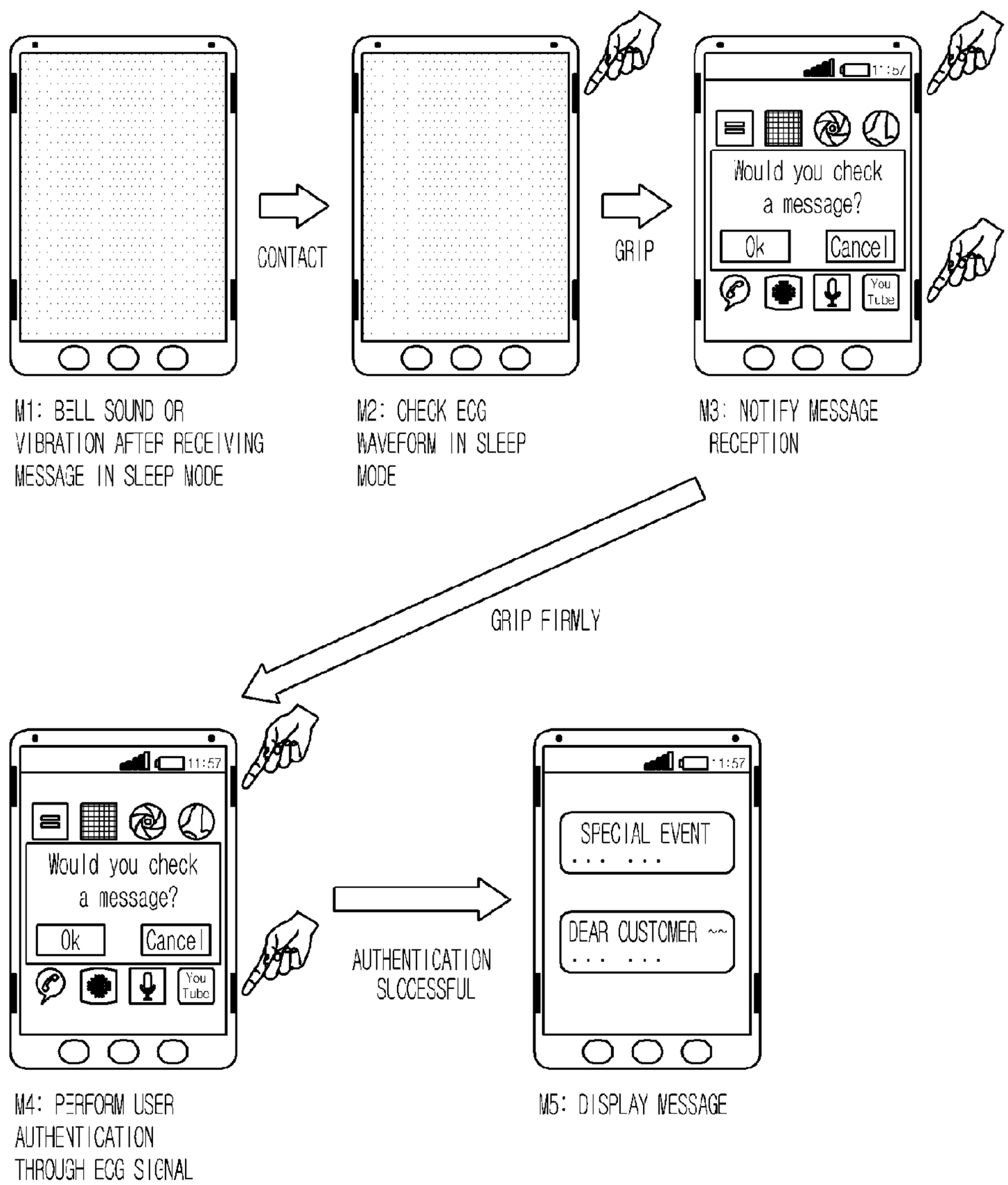
CONTACT
GRIP
Would you check
a message?
Ok
Cancel
You Tube
M1: BELL SOUND OR VIBRATION AFTER RECEIVING MESSAGE IN SLEEP MODE
M2: CHECK ECG WAVEFORM IN SLEEP MODE
M3: NOTIFY MESSAGE RECEPTION
GRIP FIRMLY
11:57
Would you check
a message?
Ok
Cancel
You Tube
AUTHENTICATION SUCCESSFUL
SPECIAL EVENT
DEAR CUSTOMER ~~
M4: PERFORM USER AUTHENTICATION THROUGH ECG SIGNAL
M5: DISPLAY MESSAGE

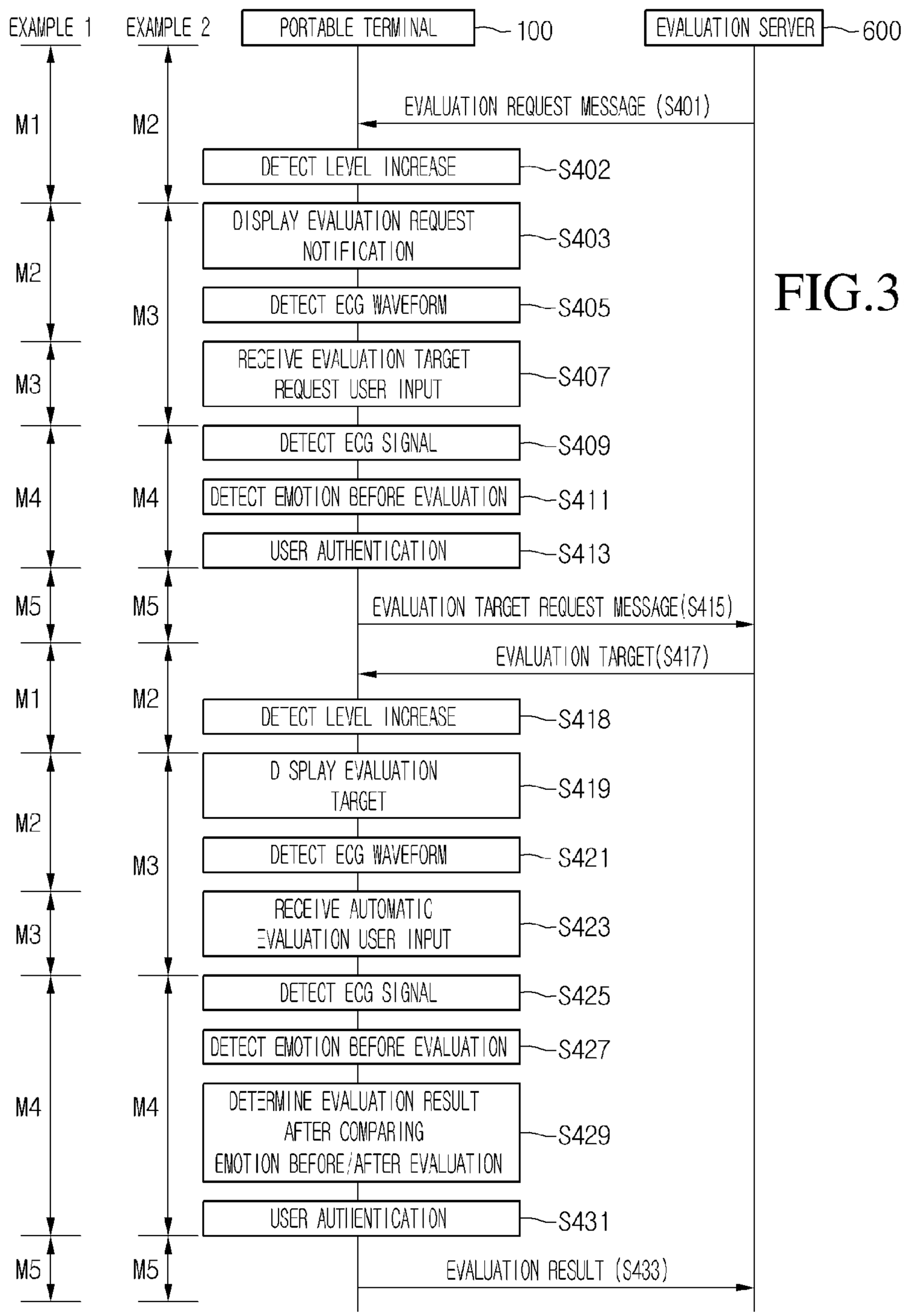
EXAMPLE 1
EXAMPLE 2
PORTABLE TERMINAL
100
EVALUATION SERVER
600
EVALUATION REQUEST MESSAGE (S401)
M1
M2
DETECT LEVEL INCREASE
S402
DISPLAY EVALUATION REQUEST NOTIFICATION
S403
M2
M3
DETECT ECG WAVEFORM
S405
M3
RECEIVE EVALUATION TARGET REQUEST USER INPUT
S407
DETECT ECG SIGNAL
S409
M4
M4
DETECT EMOTION BEFORE EVALUATION
S411
USER AUTHENTICATION
S413
M5
M5
EVALUATION TARGET REQUEST MESSAGE(S415)
EVALUATION TARGET(S417)
M1
M2
DETECT LEVEL INCREASE
S418
D SPLAY EVALUATION TARGET
S419
M2
M3
DETECT ECG WAVEFORM
S421
M3
RECEIVE AUTOMATIC EVALUATION USER INPUT
S423
DETECT ECG SIGNAL
S425
DETECT EMOTION BEFORE EVALUATION
S427
M4
M4
DETERMINE EVALUATION RESULT AFTER COMPARING EMOTION BEFORE/AFTER EVALUATION
S429
USER AUTHENTICATION
S431
M5
M5
EVALUATION RESULT (S433)

FIG.38

FIG.39

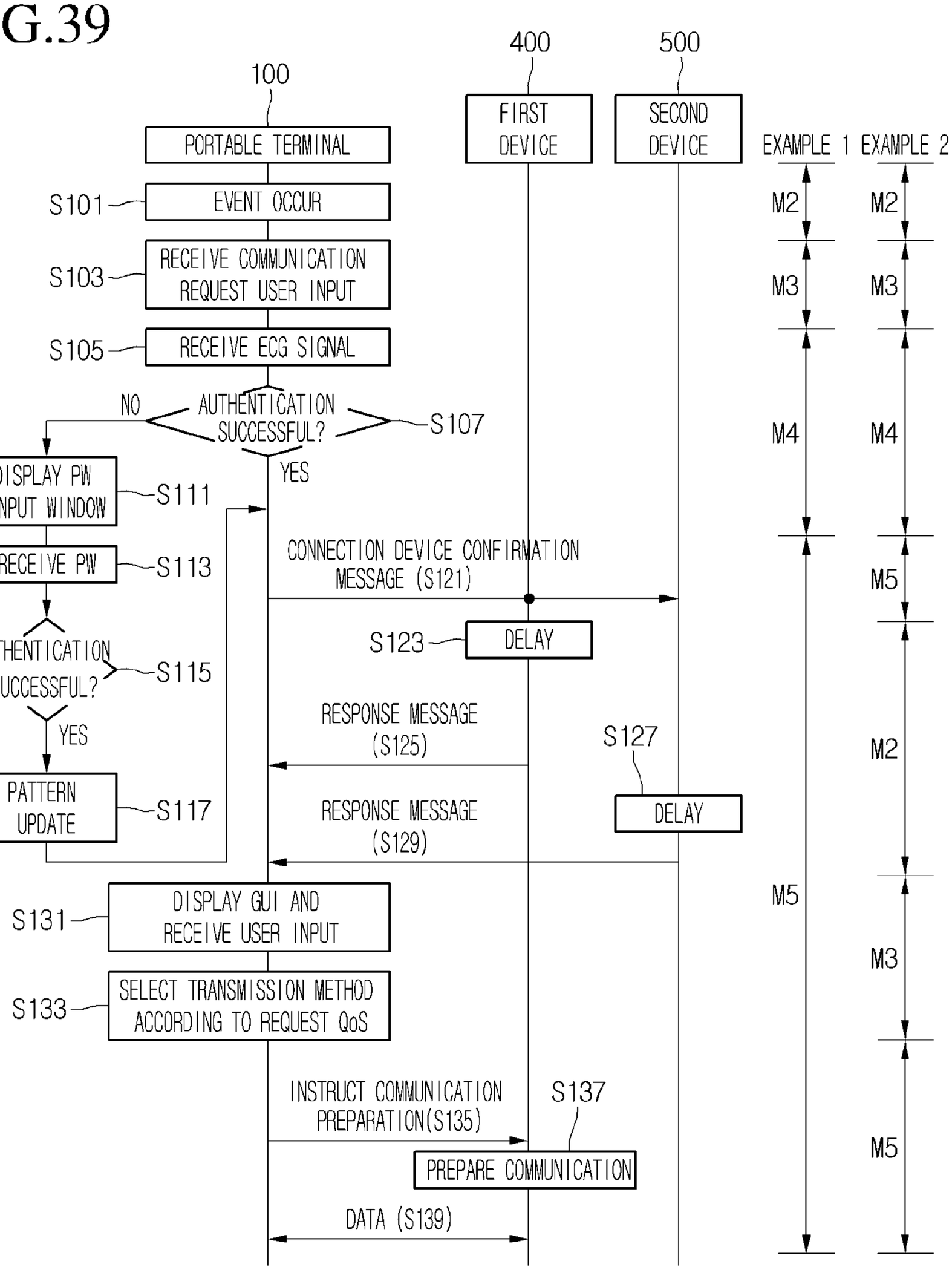
100
400
500
PORTABLE TERMINAL
FIRST DEVICE
SECOND DEVICE
EXAMPLE 1
EXAMPLE 2
S101
EVENT OCCUR
S103
RECEIVE COMMUNICATION REQUEST USER INPUT
S105
RECEIVE ECG SIGNAL
NO
AUTHENTICATION SUCCESSFUL?
S107
YES
DISPLAY PW INPUT WINDOW
S111
RECEIVE PW
S113
AUTHENTICATION SUCCESSFUL?
S115
YES
PATTERN UPDATE
S117
CONNECTION DEVICE CONFIRMATION MESSAGE (S121)
S123
DELAY
RESPONSE MESSAGE (S125)
S127
DELAY
RESPONSE MESSAGE (S129)
S131
DISPLAY GUI AND RECEIVE USER INPUT
S133
SELECT TRANSMISSION METHOD ACCORDING TO REQUEST QoS
INSTRUCT COMMUNICATION PREPARATION(S135)
S137
PREPARE COMMUNICATION
DATA (S139)
M2
M3
M4
M5
M2
M3
M4
M5
M2
M3
M5

FIG.40

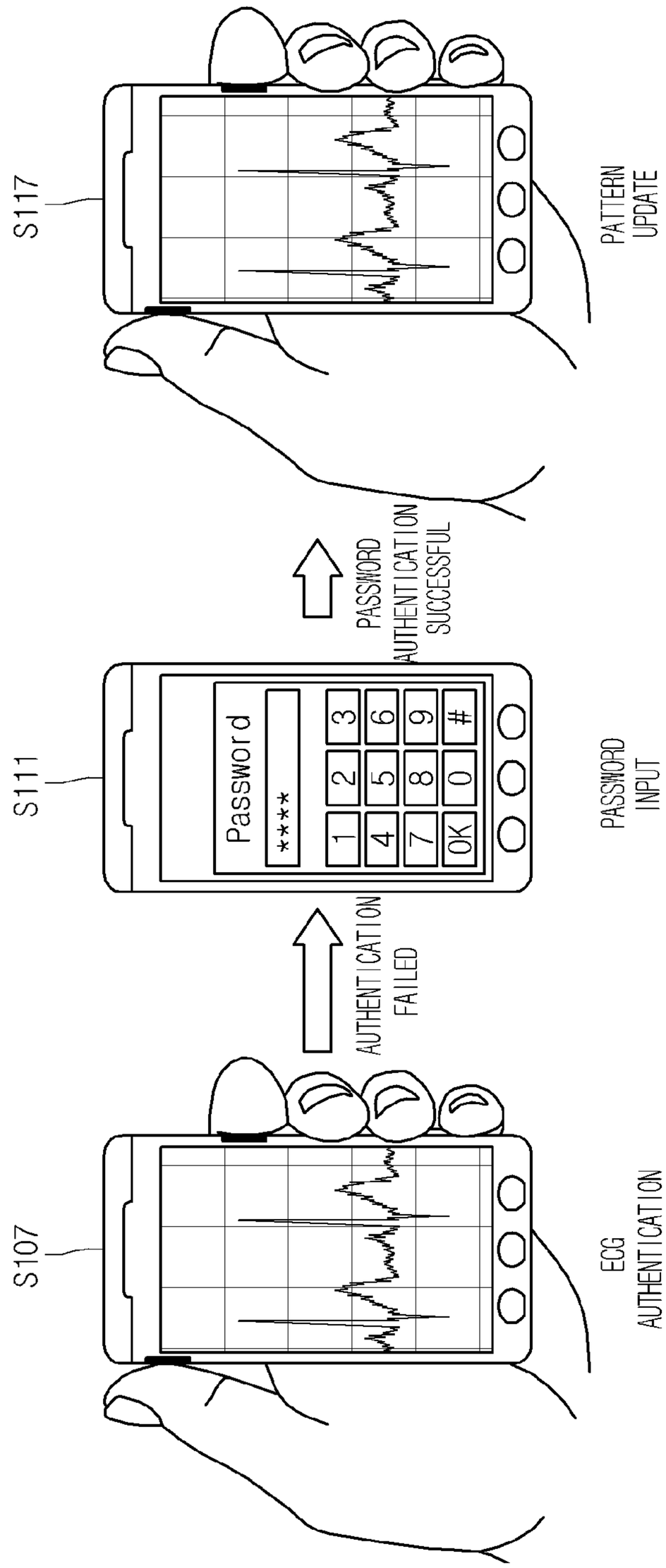
S107
ECG AUTHENTICATION
AUTHENTICATION FAILED
S111
Password
****
1 2 3
4 5 6
7 8 9
OK 0 #
PASSWORD INPUT
PASSWORD AUTHENTICATION SUCCESSFUL
S117
PATTERN UPDATE

FIG.41

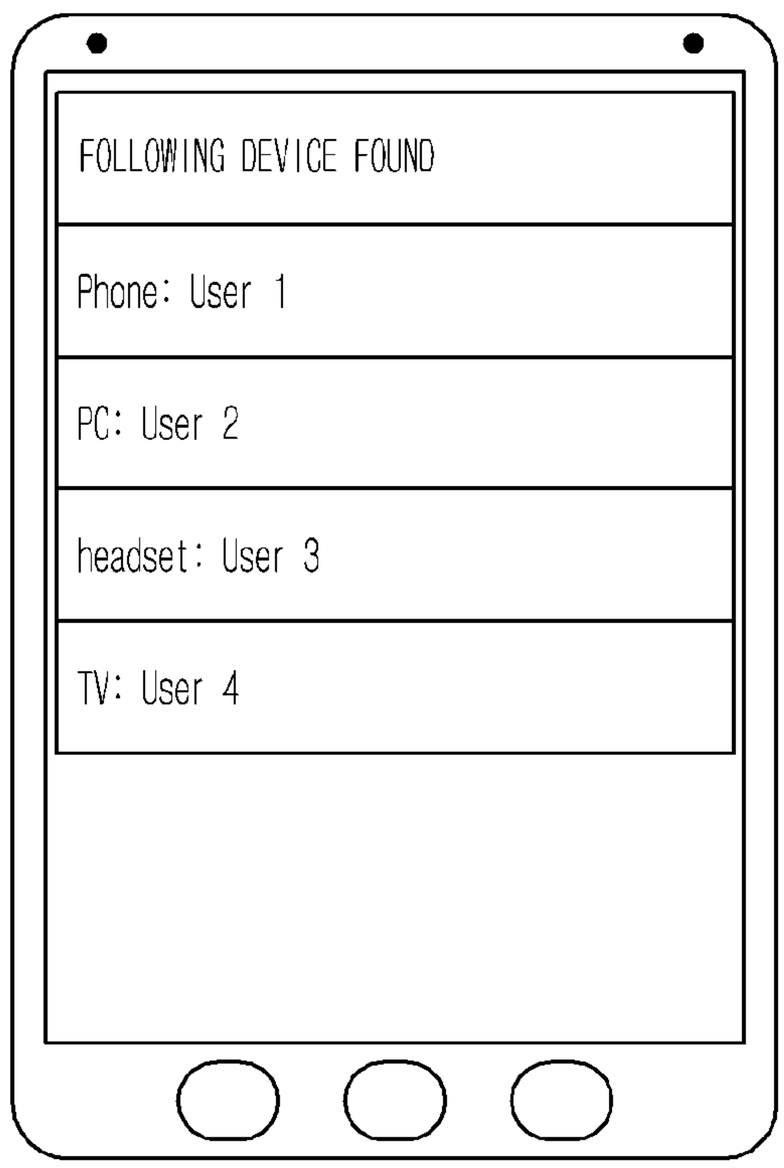
FOLLOWING DEVICE FOUND
Phone: User 1
PC: User 2
headset: User 3
TV: User 4

FIG.42

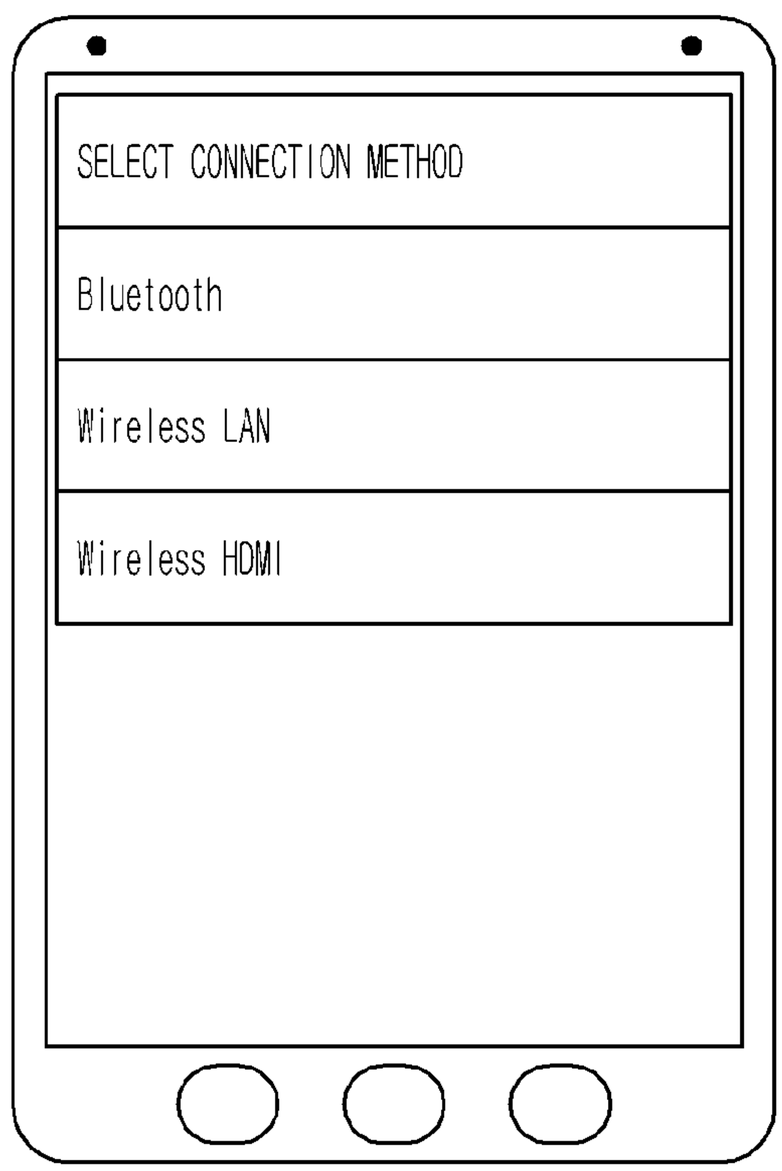
SELECT CONNECTION METHOD
Bluetooth
Wireless LAN
Wireless HDMI

FIG.43

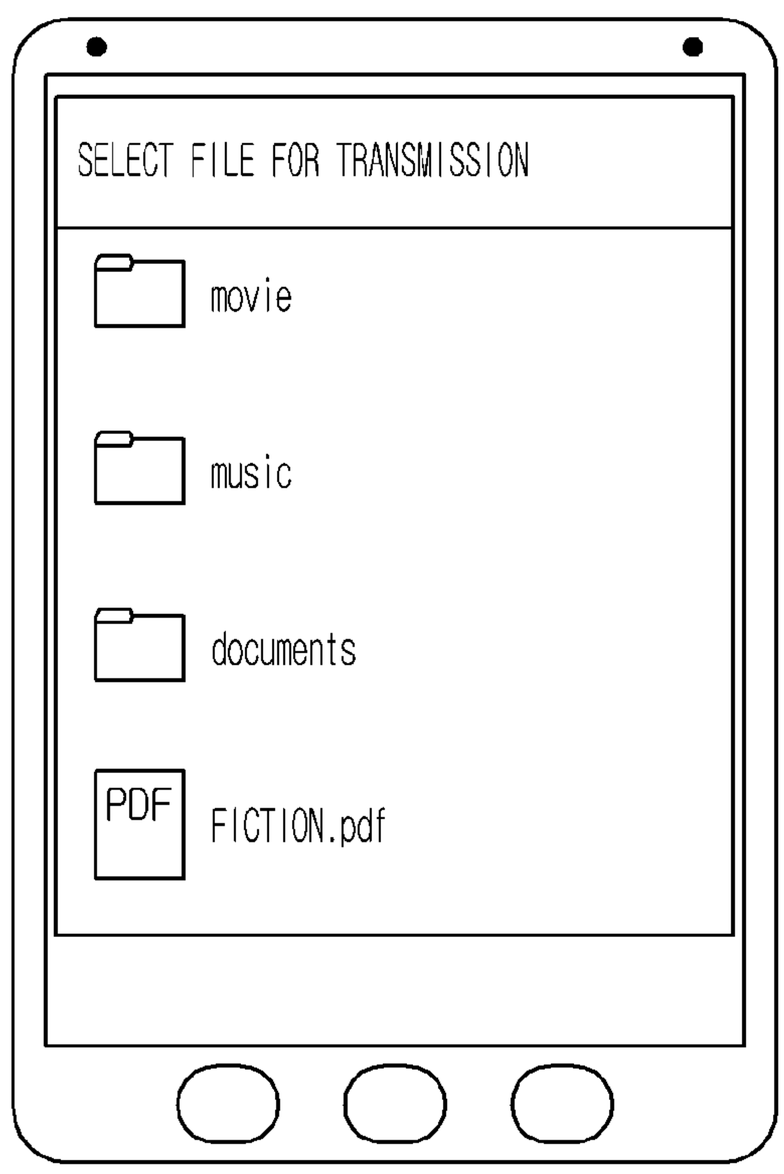
SELECT FILE FOR TRANSMISSION
movie
music
documents
PDF
FICTION.pdf

FIG.44

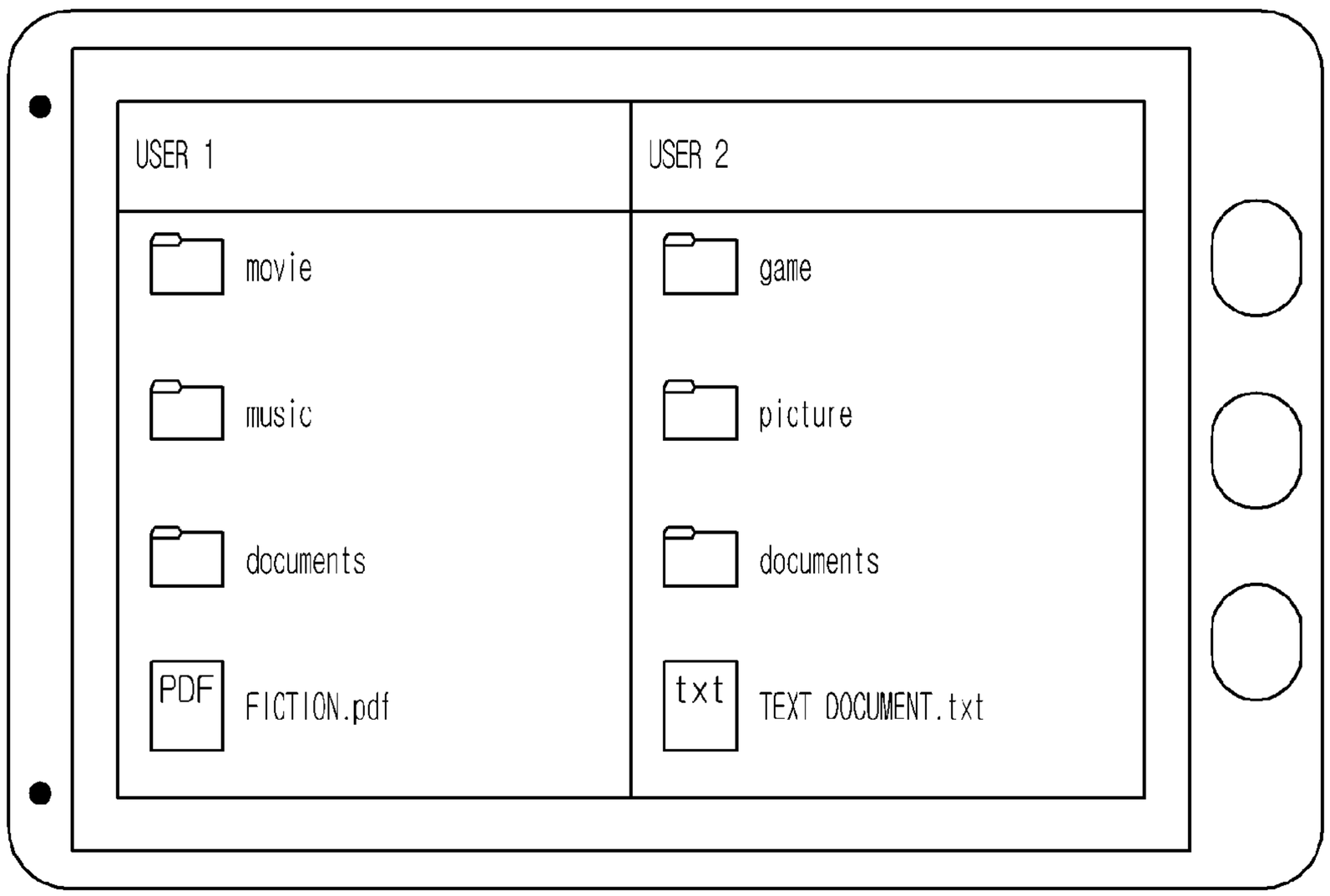
USER 1
USER 2
movie
music
documents
PDF
FICTION.pdf
game
picture
documents
txt
TEXT DOCUMENT.txt

FIG.45

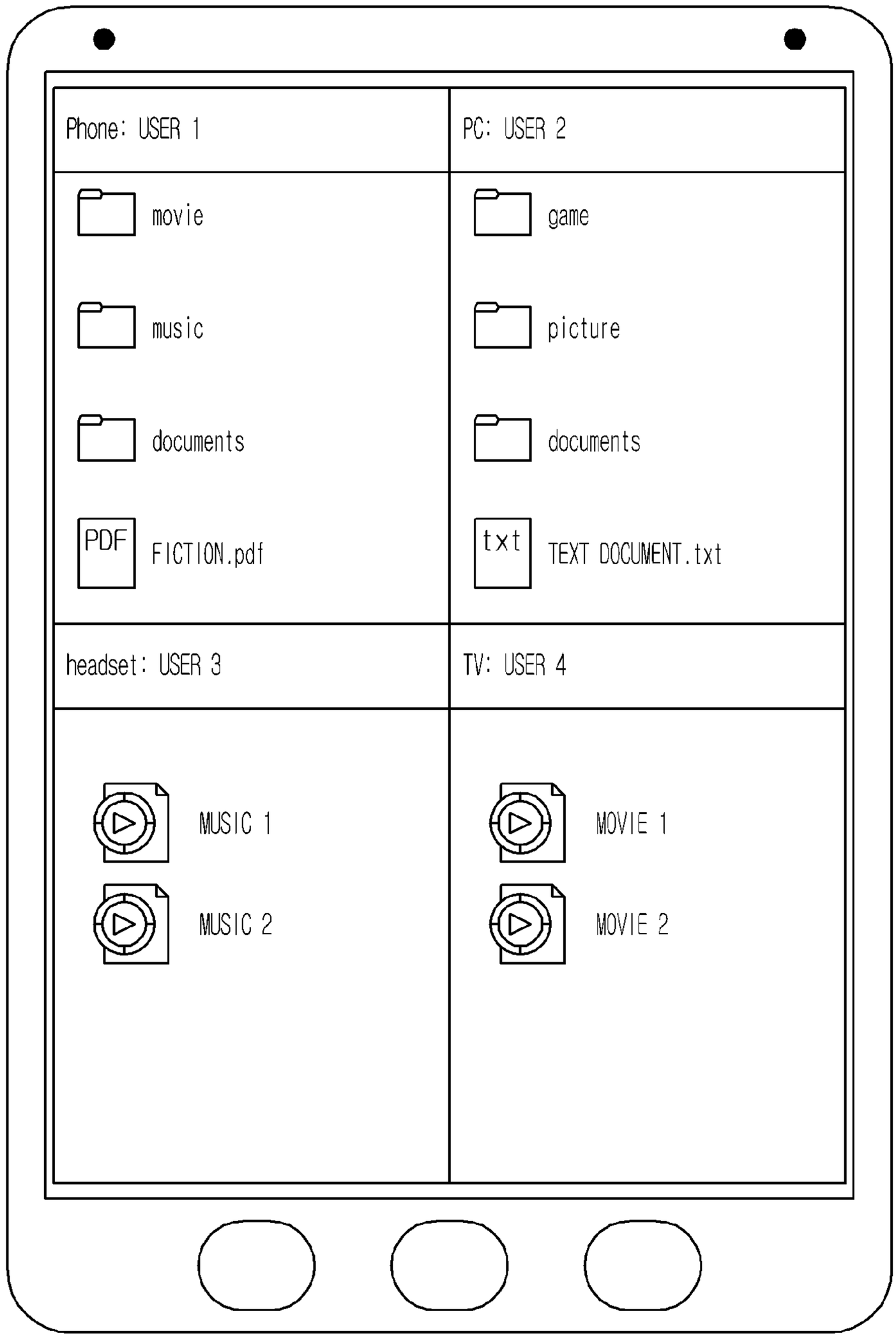
Phone: USER 1
PC: USER 2
movie
game
music
picture
documents
documents
PDF
FICTION.pdf
txt
TEXT DOCUMENT.txt
headset: USER 3
TV: USER 4
MUSIC 1
MUSIC 2
MOVIE 1
MOVIE 2

FIG.46

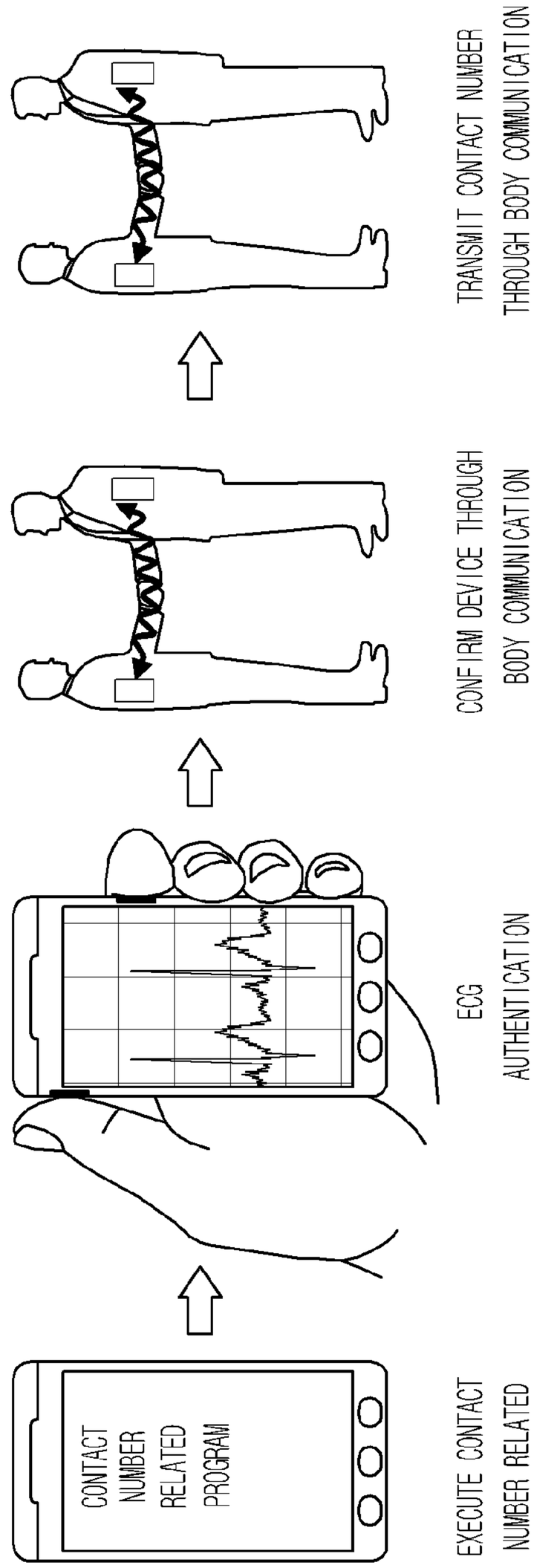
CONTACT NUMBER RELATED PROGRAM
EXECUTE CONTACT NUMBER RELATED PROGRAM
ECG AUTHENTICATION
CONFIRM DEVICE THROUGH BODY COMMUNICATION
TRANSMIT CONTACT NUMBER THROUGH BODY COMMUNICATION

FIG.47

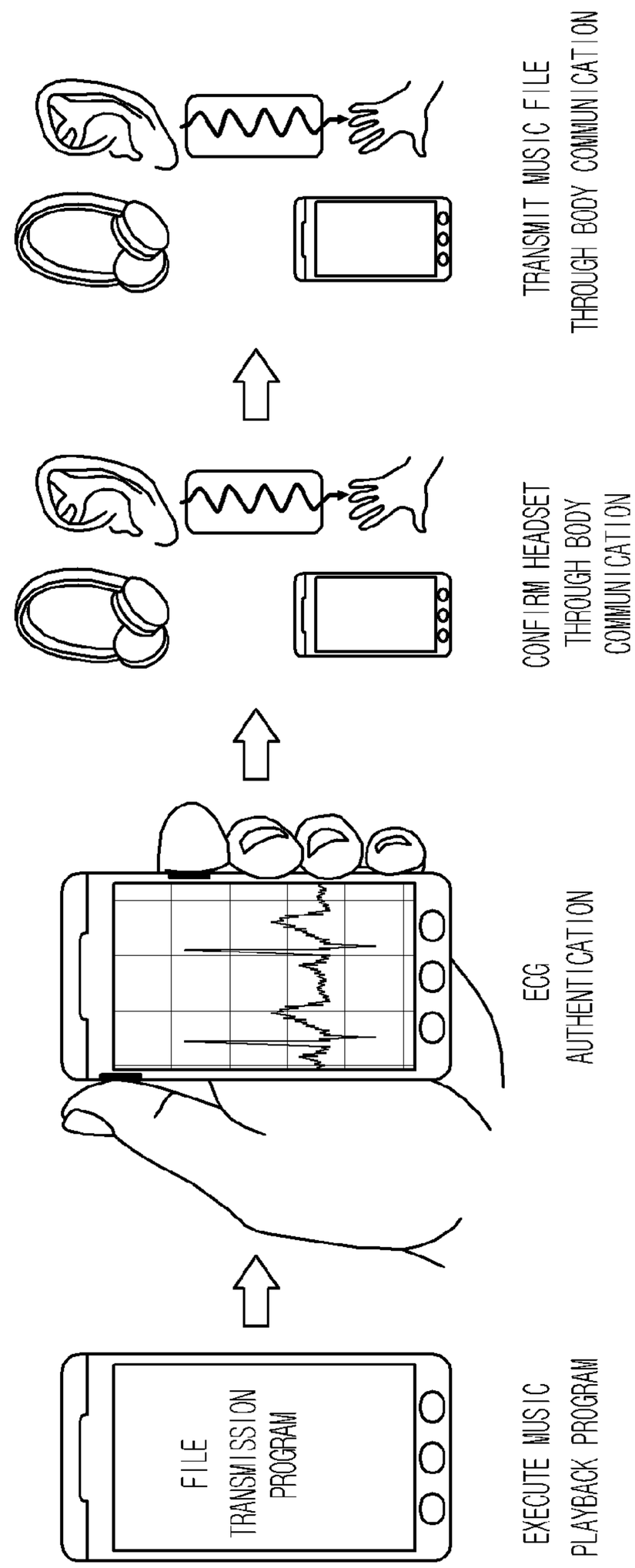
FILE TRANSMISSION PROGRAM
EXECUTE MUSIC PLAYBACK PROGRAM
ECG AUTHENTICATION
CONFIRM HEADSET THROUGH BODY COMMUNICATION
TRANSMIT MUSIC FILE THROUGH BODY COMMUNICATION

FIG.48

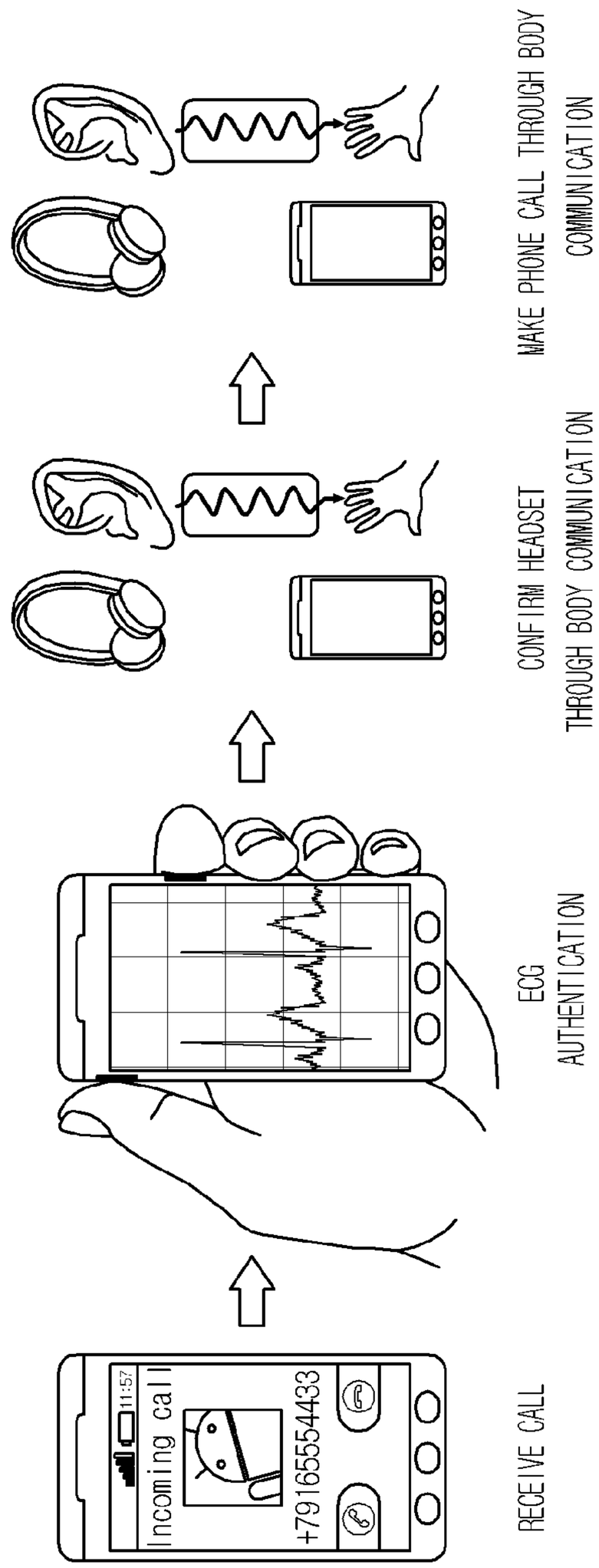
11:57
Incoming call
+79165554433
RECEIVE CALL
ECG
AUTHENTICATION
CONFIRM HEADSET
THROUGH BODY COMMUNICATION
MAKE PHONE CALL THROUGH BODY
COMMUNICATION

FIG.49

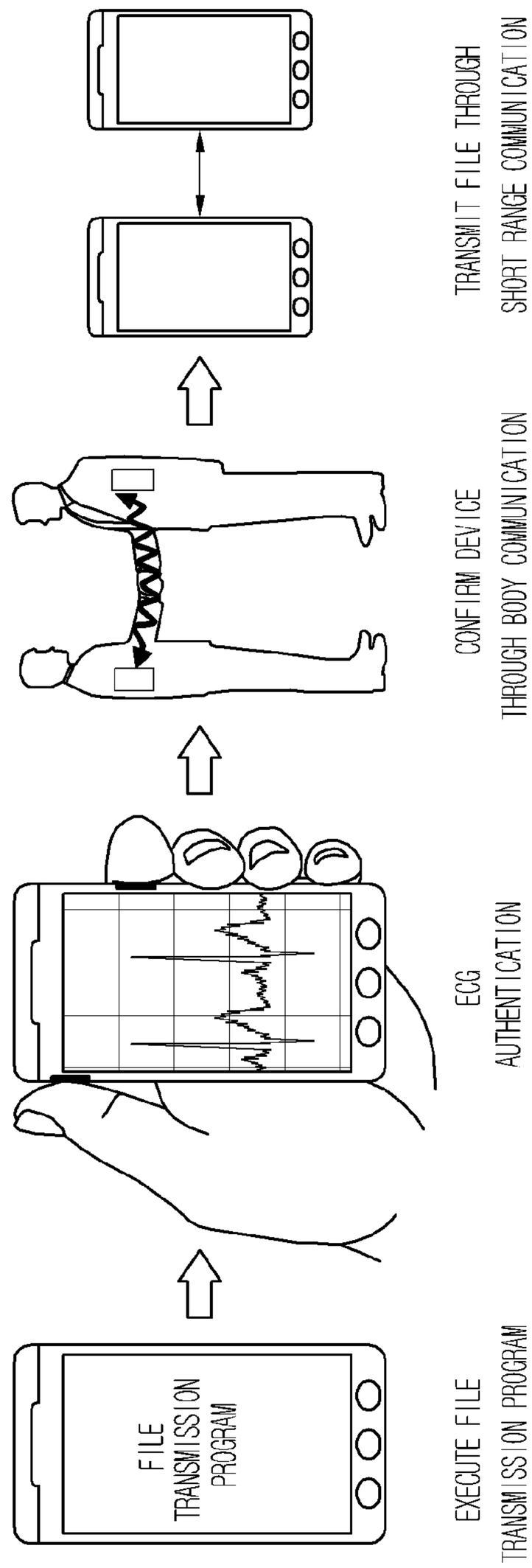
FILE TRANSMISSION PROGRAM
EXECUTE FILE TRANSMISSION PROGRAM
ECG AUTHENTICATION
CONFIRM DEVICE THROUGH BODY COMMUNICATION
TRANSMIT FILE THROUGH SHORT RANGE COMMUNICATION

FIG.50

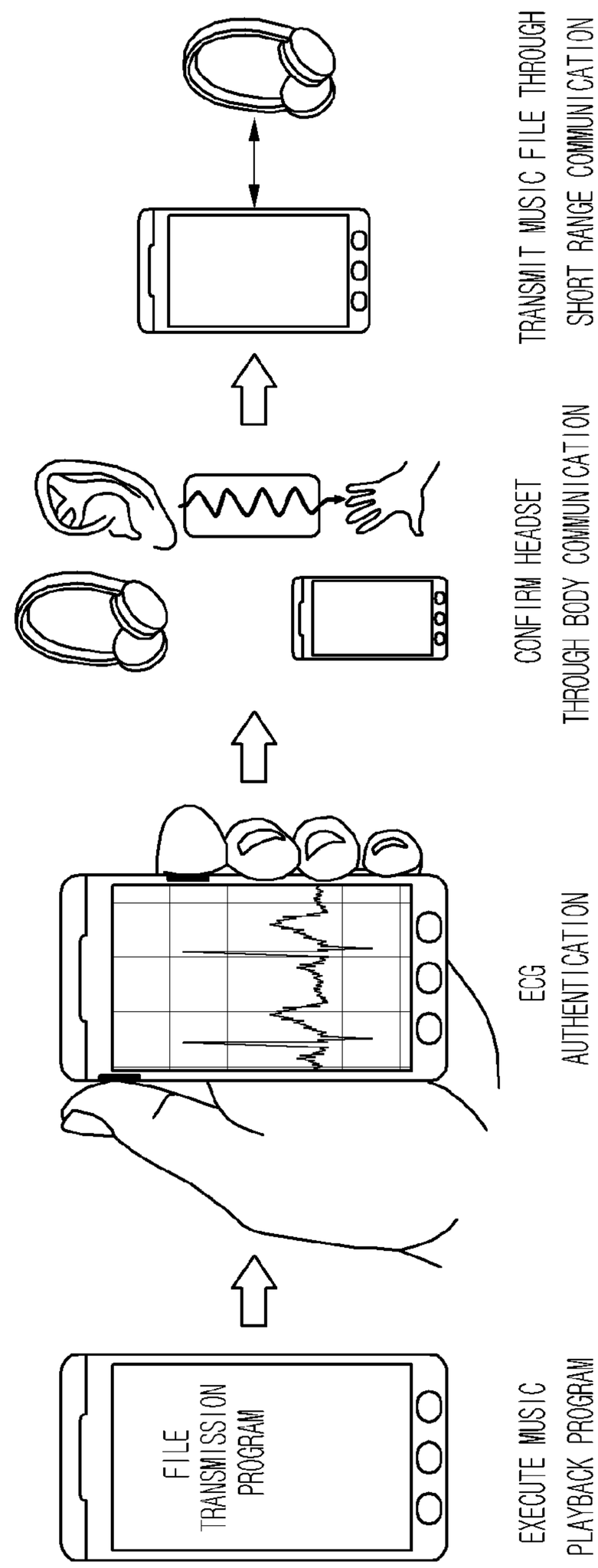
FILE TRANSMISSION PROGRAM
EXECUTE MUSIC PLAYBACK PROGRAM
ECG AUTHENTICATION
CONFIRM HEADSET THROUGH BODY COMMUNICATION
TRANSMIT MUSIC FILE THROUGH SHORT RANGE COMMUNICATION

FIG.51

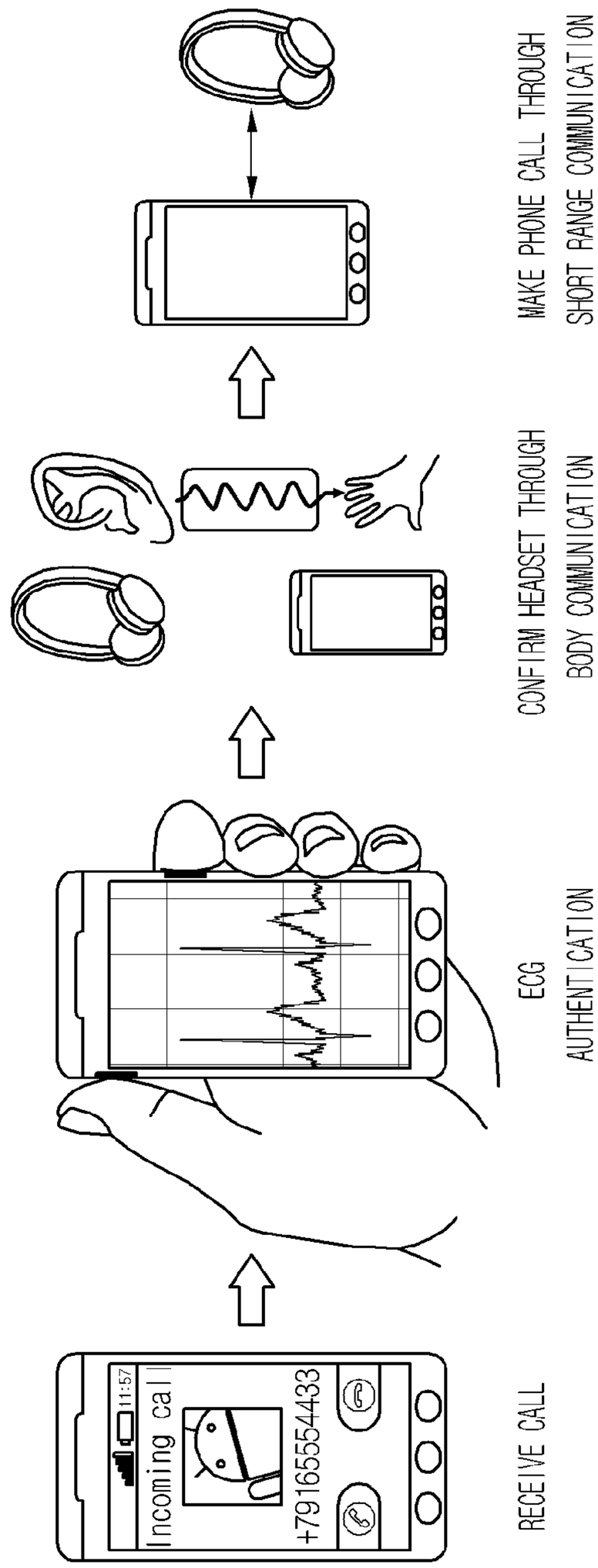
11:57
Incoming call
+79165554433
RECEIVE CALL
ECG
AUTHENTICATION
CONFIRM HEADSET THROUGH
BODY COMMUNICATION
MAKE PHONE CALL THROUGH
SHORT RANGE COMMUNICATION

FIG.52

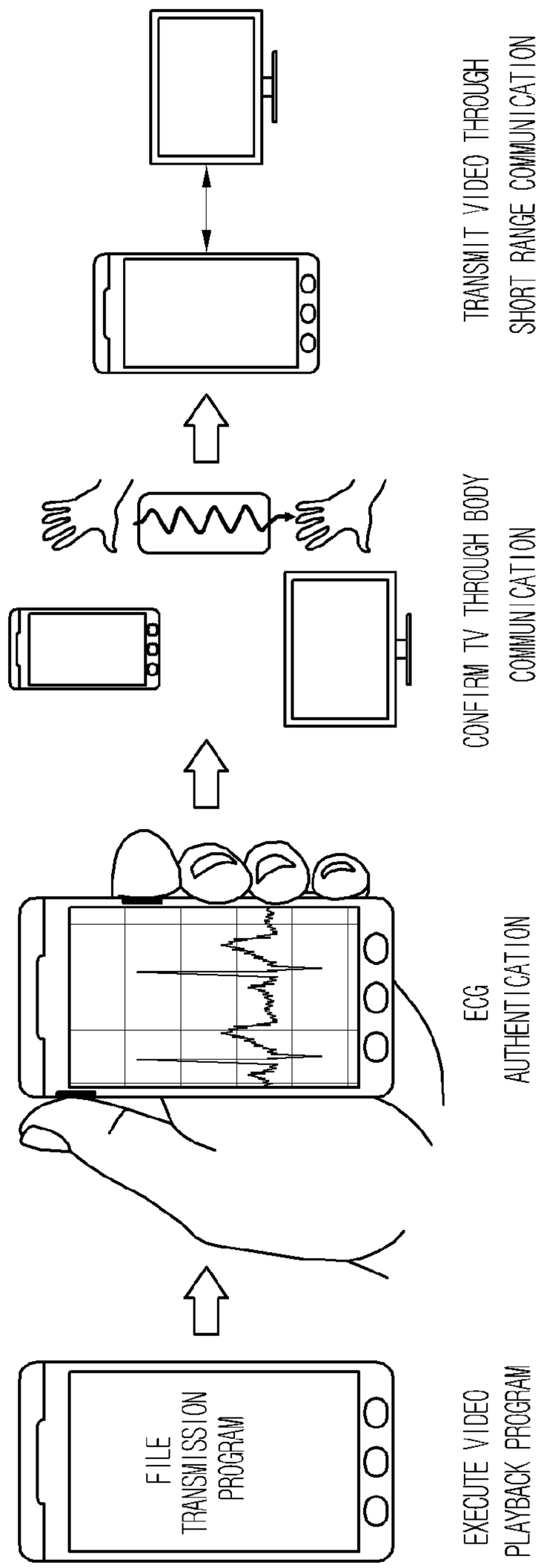
FILE
TRANSMISSION
PROGRAM
EXECUTE VIDEO
PLAYBACK PROGRAM
ECG
AUTHENTICATION
CONFIRM TV THROUGH BODY
COMMUNICATION
TRANSMIT VIDEO THROUGH
SHORT RANGE COMMUNICATION

TERMINAL AND CONTROL METHOD THEREOF

CROSS-REFERENCE TO RELATED APPLICATIONS

The present application claims priority under 35 U.S.C. 119 and 35 U.S.C. 365 to Korean Patent Applications No. 10-2011-0063728 (filed on Jun. 29, 2011), No. 10-2011-0092211 (filed on Sep. 9, 2011), and No. 10-2011-0121306 (filed on Nov. 21, 2011), which are hereby incorporated by reference in its entirety.

BACKGROUND

The present disclosure relates to a terminal and a control method thereof.

Depending on whether a terminal can be moved, it is classified into a mobile/portable terminal and a stationary terminal. Again, the mobile/portable terminal is classified into a handheld terminal and a vehicle mount terminal, depending on whether a user can carry it personally.

As such a terminal has diversified functions, it is implemented with a multimedia player form having complex functions such as capturing pictures or videos, playing music or video files, playing games, or receiving broadcasts.

In order to support and advance the functions of such a terminal, improving structural parts and/or software parts may be in consideration.

In general, in the case of a personal computer (PC), the size of a monitor is relatively large, and the performance of a central processing unit (CPU) is relatively high, so that various functions may be performed. In order to efficiently control such various functions, the PC includes diverse input devices such as a keyboard or a mouse.

Due to the advent of a mobile/portable terminal having a relatively large display unit and a high-performance CPU such as a touch-based mobile phone, e-book reader, smart pad, and tablet PC without a keypad, the mobile/portable terminal may perform various functions.

However, since the mobile/portable terminal does not have an external input device such as a keyboard or a mouse in many cases, various techniques are in search in order to easily control various functions thereof.

SUMMARY

Embodiments provide a terminal for easily controlling various functions even if it does not include an external input device such as a keyboard or a mouse, and a control method thereof.

In one embodiment, a terminal includes: at least one body sensor; at least one wireless communication module; a display unit; a memory for storing a program that processes at least one body signal detected by the at least one body sensor; and a control unit for executing the memory.

The terminal may further include: a light emitting diode; and a light receiving diode for receiving the light emitted from the light emitting diode, wherein the at least one body sensor includes a blood movement measuring sensor for generating a blood movement measurement signal from the current that the light receiving diode provides.

The terminal may further include an ECG electrode, wherein the at least one body sensor includes an electrocardiogram (ECG) sensor for generating an ECG signal from the ECG electrode.

The memory may further store an ECG pattern; and the program may perform user authentication when an ECG waveform detected from the ECG signal and the ECG pattern of the user are identical from comparison.

The at least one wireless communication module may include a body communication module for demodulating a signal generated from the ECG electrode in order to generate demodulated data, and providing a signal modulated by modulating transmission data to the ECG electrode;

The terminal may further include a proximity sensor, wherein the ECG sensor starts to generate an ECG signal through the ECG electrode when the proximity of an object is detected through the proximity sensor during a phone call; the control unit may obtain an excitement of a user from the ECG signal; the control unit may end a call or may output an alarm when the excitement is more than a predetermined level; the proximity sensor may be disposed adjacent to the ECG electrode; and the ECG electrode may be disposed adjacent to a call speaker.

The ECG electrode may be disposed at an ear accessory; and the control unit may determine whether to output an audio signal to an ear speaker of the ear accessory on the basis of an ECG signal recognized through the ECG electrode.

The terminal may further include a hand contact ECG electrode, wherein the hand contact ECG electrode is disposed at the ear accessory or the terminal; and the control unit performs an operation related to audio playback or call reception on the basis of an ECG signal recognized through the hand contact ECG electrode.

The details of one or more embodiments are set forth in the accompanying drawings and the description below. Other features will be apparent from the description and drawings, and from the claims.

BRIEF DESCRIPTION OF THE DRAWINGS

FIG. **1** is a block diagram of a portable terminal according to an embodiment.

FIG. **2** is a front view of a portable terminal according to an embodiment.

FIG. **3** is a right side view of a portable terminal according to an embodiment.

FIG. **4** is a right side view of a portable terminal according to an embodiment.

FIG. **5** is view illustrating the front bottom of a portable terminal according to an embodiment.

FIG. **6** is view illustrating the front bottom of a portable terminal according to an embodiment.

FIG. **7** is a front perspective view of a portable terminal according to an embodiment.

FIG. **8** is a rear perspective view of a portable terminal according to an embodiment.

FIG. **9** is view illustrating a body sensing accessory connected to a portable terminal according to an embodiment.

FIG. **10** is schematic view of a portable terminal having an earphone connected according to an embodiment.

FIG. **11** is a view illustrating a bio information measuring device using a wired headset according to an embodiment.

FIG. **12** is a view of a gain controlling unit equipped in an ECG sensor according to an embodiment.

FIG. **13** is a view illustrating a bio information measuring device using a wired headset according to another embodiment.

FIG. **14** is a view illustrating a bio information measuring device using a wired headset according to another embodiment.

FIG. **15** is a view illustrating a bio information measuring device using a wireless headset according to an embodiment.

FIG. **16** is a block diagram illustrating part of a circuit of a portable terminal according to an embodiment.

FIG. **17** is schematic structure of a switch according to an embodiment.

FIG. **18** is a block diagram of a noise filter according to an embodiment.

FIG. **19** is a block diagram of a noise filter according to an embodiment.

FIG. **20** is a block diagram of a noise filter according to an embodiment.

FIG. **21** is a block diagram of a noise filter according to another embodiment.

FIG. **22** is a view of an earphone jack type PPG sensor according to an embodiment.

FIG. **23** is a block diagram illustrating additional components of a portable terminal according to an embodiment.

FIG. **24** is a flowchart of a mode changing method according to an embodiment.

FIG. **25** is a graph illustrating a relation between a plurality of modes and an ECG signal according to an embodiment.

FIG. **26** is a mode changing graph according to an embodiment.

FIG. **27** is a view of an ECG pattern according to an embodiment.

FIG. **28** is a flowchart illustrating a method of controlling an operation of a portable terminal according to an embodiment.

FIG. **29** is a view illustrating a process for releasing a lock state according to an embodiment.

FIG. **30** is a flowchart illustrating a process for releasing a lock state according to another embodiment.

FIG. **31** is a view illustrating a process for making a call according to an embodiment.

FIG. **32** is a flowchart illustrating a method of controlling an operation of a portable terminal according to an embodiment.

FIG. **33** is a flowchart illustrating a method of determining whether to end a call of a portable terminal according to another embodiment.

FIG. **34** is a view when a user's emotional state is matched to the contact information of the other side call and is stored in a phone book.

FIG. **35** is a view illustrating a method of managing a user's health state by using ECG data in a portable terminal **100** according to an embodiment.

FIG. **36** is a flowchart illustrating a method of controlling an operation of a portable terminal according to another embodiment.

FIG. **37** is a view illustrating a process for confirming message content according to an embodiment.

FIG. **38** is a ladder diagram illustrating a method of evaluating an evaluation target through an emotion sensed from an ECG signal according to an embodiment.

FIG. **39** is a flowchart illustrating a data transmitting method of a portable terminal according to an embodiment.

FIG. **40** is a view illustrating a process for ECG pattern update according to an embodiment.

FIG. **41** is view illustrating GUI for connection device selection according to an embodiment.

FIG. **42** is view illustrating GUI for selecting a device to be connected according to an embodiment.

FIG. **43** is view illustrating GUI for file selection according to an embodiment.

FIG. **44** is view illustrating GUI for file selection according to another embodiment.

FIG. **45** is view illustrating GUI according to an embodiment.

FIG. **46** is a view illustrating a process for transmitting a contact number to a mobile phone at the other side according to an embodiment.

FIG. **47** is a view illustrating a process for listening to music according to an embodiment.

FIG. **48** is view illustrating a process for phone call according to an embodiment.

FIG. **49** is a view illustrating a process for transmitting a security file to the other side's mobile phone according to an embodiment.

FIG. **50** is a view illustrating a process for listening to music according to an embodiment.

FIG. **51** is view illustrating a process for phone call according to an embodiment.

FIG. **52** is a view illustrating a process for watching a video according to an embodiment.

DETAILED DESCRIPTION OF THE EMBODIMENTS

Hereinafter, a portable terminal according to the present invention will be described in more detail with reference to the accompanying drawings. The suffix "module" and "unit" for components, which used in the description below, is assigned and mixed in consideration of only easiness in writing the specification. That is, the suffix itself does not have different meanings or roles.

A portable terminal described in this specification may include a mobile phone, a smart phone, a laptop computer, a digital broadcast terminal, a Personal Digital Assistant (PDA), a Portable Multimedia Player (PMP), and a GPS navigation system. However, it is apparent to those skilled in the art that a configuration according to embodiments of the present invention may be applicable to a stationary terminal such as a digital TV and a desktop computer, besides a portable terminal.

A structure of a portable terminal according to an embodiment will be described below with reference to FIG. **1**.

FIG. **1** is a block diagram of a portable terminal according to an embodiment.

The portable terminal **100** includes a wireless communication unit **110**, an Audio/Video (A/V) input unit **120**, a user input unit **130**, a sensing unit **140**, an output unit **150**, a memory **160**, an interface unit **170**, a control unit **180**, and a power supply unit **190**. Since the portable terminal **100** is not limited to the components shown in FIG. **1**, it may be implemented with more or less components.

Hereinafter, the components will be described sequentially.

The wireless communication unit **110** may include at least one module that allows wireless communication between the portable terminal **100** and a wireless communication system or between the portable terminal **100** and a network that the portable terminal **100** belongs. For example, the wireless communication unit **110** may include a broadcast receive module **111**, a mobile communication module **112**, a wireless internet module **113**, a short range communication module **114**, a position information module **115**, and a body communication module **116**.

The broadcast receive module **111** receives a broadcast signal and/or broadcast related information from an external broadcast management server through a broadcast channel.

The broadcast channel may include a satellite channel a terrestrial channel. The broadcast management server may refer to a server that generates and transmits a broadcast

signal and/or broadcast related information or a server that receives a pre-generated broadcast signal and/or broadcast related information and transmits it/them to a terminal. The broadcast signal may include a broadcast signal in the combination form of a data broadcast signal and a TV broadcast signal or a radio broadcast signal, in addition to a TV broadcast signal, a radio broadcast signal, and a data broadcast signal.

The broadcast related information may refer to information on a broadcast channel, a broadcast program, or a broadcast service provider. The broadcast related information may be provided through a mobile communication network. In this case, the broadcast related information may be received by the mobile communication module **112**.

The broadcast related information may exist in various forms. For example, the broadcast related information may be in forms such as Electronic Program Guide (EPG) of DMB (Digital Multimedia Broadcasting) or Electronic Service Guide (ESG) of DVB-H (Digital Video Broadcast-Handheld (DVB-H).

The broadcast receiving module **111** may receive a digital broadcast signal by using a digital broadcast system such as Digital Multimedia Broadcasting-Terrestrial (DMB-T), Digital Multimedia Broadcasting-Satellite (DMB-S), Media Forward Link Only (MediaFLO), Digital Video Broadcast-Handheld (DVB-H), and Integrated Services Digital Broadcast-Terrestrial (ISDB-T). Of course, the broadcast receiving module **111** may be configured to be appropriate for the digital broadcast system and other broadcast systems.

A broadcast signal and/or broadcast related information received through the broadcast receiving module **111** may be stored in the memory **160**.

The mobile communication module **112** transmits/receives a wireless signal to/from at least one of a base station, an external terminal, and a server on a mobile communication network. The wireless signal may include various forms of data according to a voice call signal, video call signal, or character/multimedia message transmission.

The wireless internet module **113** refers to a module for wireless internet access, and may be embedded in or externally mounted on the portable terminal **100**. A wireless internet technique includes Wireless LAN (WLAN), i.e. Wi-Fi, Wireless broadband (Wibro), World Interoperability for Microwave Access (Wimax), and High Speed Downlink Packet Access (HSDPA).

The short range communication module **114** refers to a module for short range communication. A short range communication technique includes Bluetooth, Radio Frequency Identification (RFID), infrared Data Association (IrDA), Ultra Wideband (UWB), and ZigBee.

The position information module **115** is a module for obtaining the position of a portable terminal, and its representative example includes a Global Position System (GPS).

The body communication module **116** outputs a modulated signal to an electrode that contacts the body after modulating the received data from the control unit **180** in order for body communication. Additionally, the body communication module **116** demodulates the received signal from the electrode that contacts the body in order for body communication, and then, delivers the demodulated data to the control unit **180**. The modulation for body communication may be Frequency Modulation (FM). The demodulation for body communication may be demodulation corresponding to the FM.

Referring to FIG. **1**, the A/V input unit **120** is used for an audio signal or video signal input, and may include a camera **121** and a mike **122**. The camera **121** processes an image frame of a still image or a moving image obtained by an image sensor during a video call mode or a capture mode. The processed image frame may be displayed on a display unit **151**.

The image frame processed in the camera **121** may be stored in the memory **160** or transmitted to an external through the wireless communication unit **110**. At least two cameras **121** may be equipped depending ton a usage environment.

The mike **122** receives an external sound signal through a microphone during a call mode, a recording mode, or a voice recognition mode, and then, processes the received signal as electrical voice data. In the case of a call mode, the processed voice data may be converted into a format available for transmission to a mobile communication base station by using the mobile communication module **112**, and then, may be outputted. Various noise canceling algorithms may be implemented in the mike **122** in order to cancel the noise occurring while an external sound signal is received.

The user input unit **130** generates input data for an operation control of a terminal by a user. The user input unit **130** may include a key pad, a dome switch, a touch pad (resistive/capacitive), a jog wheel, and a jog switch.

The sensing unit **140** generates a sensing signal for controlling an operation of the portable terminal **100** by sensing a current state of the portable terminal **100** such as the close/open state of the portable terminal **100**, the position of the portable terminal **100**, the user contact of the portable terminal **100**, the orientation of the portable terminal **100**, and the acceleration/deceleration of the portable terminal **100**. For example, if the portable terminal **100** is the form of a slide phone, the sensing unit **140** senses whether the slide phone is opened/closed. Additionally, the sensing unit **140** senses whether the power supply unit **190** supplies power or whether the interface unit **170** is combined with an external device. Moreover, the sensing unit **140** may include a proximity sensor **141** and a body sensor **142**.

The body sensor **142** may include a finger print sensor **142***a*, a photoplethysmographic (PPG) signal sensor **142***b*, and an Electrocardiogram (ECG) sensor **142***c*.

The fingerprint sensor **142***a* generates fingerprint recognition information from a signal of a fingerprint recognition electrode. The fingerprint sensor **142***a* may or may not include a fingerprint recognition electrode conceptually.

The PPG sensor **142***b* generates a blood movement measurement signal from the current that is provided from a light receiving diode that receives the light emitted from a light emitting diode. The PPG sensor **142***b* may or may not include a light emitting diode and a light receiving diode conceptually.

The ECG sensor **142***c* generates an ECG signal from a signal of an ECG electrode. The ECG sensor **142***c* may or may not include an ECG electrode conceptually.

The output unit **150** generates a visual, auditory or tactile output, and includes a display unit **151**, a sound outputting module **152**, an alarm unit **153**, and a haptic module **154**.

The display unit **151** displays (outputs) information processed by the portable terminal **100**. For example, when a portable terminal is in a call mode, the display unit **151** displays call related User Interface (UI) or Graphic User Interface (GUI). When the portable terminal **100** is in a video call mode or a capture mode, the display unit **100** displays a captured or/and received image, UI, and GUI.

The display unit **151** includes at least one of a liquid crystal display (LCD), a thin film transistor-liquid crystal display (TFT LCD), an organic light-emitting diode (OLED), a flexible display, and a 3D display.

Some displays may be configured with a transparent type or a light transmission type in order to see an external through them. This may be called a transparent display, and its representative example is a Transparent OLED (TOLED). The display unit **151** may be configured with a rear structure or a light transmission type structure. According to such a structure, a user may see an object at the rear of a terminal body through an area that the display unit **151** of the terminal body occupies.

At least two display units **151** may be provided according to an implementation form of the portable terminal **100**. For example, a plurality of display units may be spaced from each other on one side, may be integrally disposed on one side, or may be disposed at different sides, respectively.

When the display unit **151** and a touch operation sensing sensor (hereinafter, referred to as a touch sensor) have a mutual layer structure (hereinafter, referred to as a touch screen), it may serve as an input device in addition to an output device. A touch sensor may have a form such as a touch film, a touch sheet, and a touch pad.

The touch sensor may be configured to convert a change of a pressure applied to a specific portion of the display unit **151** or a change of a capacitance occurring at a specific portion of the display unit **151** into an electrical input signal. The touch sensor may be configured to detect a pressure during touching in addition to a touched position and area.

If a touch input is provided for a touch sensor, signal(s) corresponding thereto is(are) transmitted to a touch controller. The touch controller processes the signal(s) and then transmits corresponding data to the control unit **180**. By doing so, the control unit **180** recognizes which area of the display unit **151** is touched.

Referring to FIG. **1**, the proximity sensor **141** may be disposed in an inner area of a portable terminal surrounded by the touch screen or near the touch screen. The proximity sensor **141** is a sensor for detecting an object that approaches a predetermined detection side or an object that exists near the proximity sensor **141**, by using electromagnetic force or infrared without mechanical contact. The proximity sensor **141** has a longer lifecycle and a higher utilization than a contact type sensor.

The proximity sensor **141** may include a transmission type photoelectric sensor, a direct reflection type photoelectric sensor, a mirror reflection type photoelectric sensor, a high frequency oscillation type proximity sensor, a capacitance type proximity sensor, a magnetic type proximity sensor, and an infrared proximity sensor. If the touch screen is a capacitive type, it is configured to detect the proximity of the pointer by using the change in an electric field according to the proximity of the pointer. In this case, the touch screen (i.e., a touch sensor) may be classified as a proximity sensor.

For convenience of description, an action for recognizing that the pointer is positioned on the touch screen is called "proximity touch", and an action that a pointer actually contacts the touch screen is called "contact touch". The position where a pointer contacts the touch screen through proximity touch means that the pointer contacts the touch screen vertically through proximity touch.

The proximity sensor detects proximity touch and a proximity touch pattern (for example, proximity touch distance, proximity touch direction, proximity touch speed, proximity touch time, proximity touch position, and proximity touch moving state). Information on the detected proximity touch operation and proximity touch pattern may be outputted on a screen.

The audio output module **152** may output audio data received from the wireless communication unit **110** or stored in the memory **160** during call signal reception, a call mode, a recording mode, a voice recognition mode, or a broadcast receiving mode. The sound outputting module **152** outputs a sound signal, which is related to a function of the portable terminal **100** (for example, a call signal incoming sound and a message incoming sound). The sound outputting module **152** may include a receiver, a speaker, and a buzzer.

The alarm unit **153** outputs a signal notifying an event occurrence of the portable terminal **100**. Examples of the event occurring in the portable terminal **100** includes call signal reception, message reception, key signal input, and touch input. The alarm unit **153** may output a signal notifying event occurrence through vibration in addition to a video signal or an audio signal. Since the video signal or the audio signal may be outputted through the display unit **151** or the sound outputting module **152**, they **151** and **152** may be classified as part of the alarm unit **153**.

The haptic module **154** generates various haptic effects that a user can feel. A representative example of a haptic effect that the haptic module **154** generates includes vibration. The intensity and pattern of vibration that the haptic module **154** generates is controllable. For example, different vibrations are combined and outputted or are sequentially outputted.

The haptic module **154** may generate various haptic effects such as pin arrangement that vertically moves with respect to a skin contact surface, injection or suction power of air through an injection inlet or a suction inlet, rubbing for skin surface, electrode contact, an effect by stimuli such as electrostatic force, and an effect by cold/warm sense reproduction using a device that suctions or emits heat, in addition to the vibration.

The haptic module **154** may be implemented to deliver a haptic effect through direct contact and also allows a user to feel a haptic effect through a muscle sense of a finger or an arm. At least two haptic modules **154** may be equipped according to a configuration aspect of the portable terminal **100**.

The memory **160** may store a program for an operation of the control unit **180**, and may temporarily store input/output data (for example, a phone book, a message, a still image, and, a moving image. The memory **160** may store data regarding the vibrations and sounds of various patterns, which are outputted during touch input on the touch screen.

The memory **160** may include at least one storage medium of a flash memory type, a hard disk type, a multimedia card micro type, a card type memory (for example, SD or XD memory), Random Access Memory (RAM), Static Random Access Memory (SRAM), Read-Only Memory (ROM), Electrically Erasable Programmable Read-Only Memory (EEPROM), Programmable Read-Only Memory (PROM), magnetic memory, magnetic disk, and optical disk. The portable terminal **100** may operate in relation to a web storage that performs a storage function of the memory **160** on internet.

The interface unit **170** serves as a path to all external devices connected to the portable terminal **100**. The interface unit **170** receives data from an external device or power to deliver it to each component in the portable terminal **100**, or transmits data in the portable terminal **100** to an external device For example, the interface unit **170** may include a wire/wireless headset port, an external charging port, a memory card port, a port for connecting to a device having an identification module, an audio Input/Output (I/O) port, a video I/O port, and an earphone jack.

The identification module is a chip for storing various information to certify the usage permission of the portable terminal **100**, and may include User Identify Module (UIM),

Subscriber Identity Module (SIM), and Universal Subscriber Identity Module (USIM). A device having an identification module (hereinafter, referred to as an identification device) may be manufactured with a smart card type. Accordingly, the identification device may be connected to the portable terminal **100** through a port.

When the portable terminal **100** is connected to an external cradle, the interface unit may serve as a path through which power from the cradle is supplied to the portable terminal **100**, or a path through which various command signals inputted from the cradle is delivered to the portable terminal **100**. The various command signals or power inputted from the cradle may operate as a signal that recognizes that the portable terminal **100** is properly mounted on the cradle.

The control unit **180** generally controls overall operations of the portable terminal **100**. For example, the control unit **180** controls and processes operations related to voice call, data communication, and video call. The control unit **180** may include a multimedia module **181** for playing multimedia. The multimedia module **181** may be implemented in the control unit **180**, and may be implemented, being separated from the control unit **180**.

The control unit **180** may perform a pattern recognition process for recognizing handwriting input and picture drawing input on the touch screen as a character and an image, respectively.

The power supply unit **190** receives external power and internal power according to a control of the control unit **180**, and then, supplies power necessary for an operation of each component.

Various embodiments described herein may be implemented using a computer or similar device thereto readable medium through software, hardware or a combination thereof.

In terms of hardware implementation, embodiments described herein may be implemented using at least one of application specific integrated circuits (ASICs), digital signal processors (DSPs), digital signal processing devices (DSPDs), programmable logic devices (PLDs), field programmable gate arrays (FPGAs), processors, controllers, micro-controllers, microprocessors, electric units for performing other functions. In some cases, embodiments may be implemented by the control unit **180**.

In terms of software implementation, embodiments related to a procedure or function may be implemented with an additional software module for performing at least one function or operation. A software code may be implemented by a software application written using a proper program language. The software code is stored in the memory **160**, and is executed by the control unit **180**.

The external appearance of a portable terminal according to an embodiment will be described with reference to FIGS. **2** to **9**.

FIG. **2** is a front view of a portable terminal according to an embodiment.

As shown in FIG. **2**, the portable terminal **100** includes a display unit **151** at the front and four ECG electrodes **171**. The four ECG electrodes **171** are disposed at the top and bottom of the left bezel and the top and bottom of the right bezel of the portable terminal **100**. In various embodiments, the number of electrodes and their positions may vary.

FIG. **3** is a right side view of a portable terminal according to an embodiment.

As shown in FIG. **3**, the portable terminal **100** includes two ECG electrodes **171** at the right bezel. Each of the light emitting diode **172** and the light receiving diode **173** for the PPG sensor **142***b* may be disposed adjacent to the ECG electrode **171**. Thereby, ECG measurement and blood movement measurement are possible at the same time.

Moreover, the portable terminal **100** includes two fingerprint recognition electrodes **174** instead of the two ECG electrodes **171** at the right bezel. The light emitting diode **172** and the light receiving diode **173** for the PPG sensor **142***b* may be disposed adjacent to each of the ECG electrodes **174**. Thereby, fingerprint measurement and blood movement measurement are possible at the same time.

In FIG. **3**, the number of the ECG electrodes **171** and their positions, the number of the light emitting diodes **172** and their position, the number of the light receiving diodes **173** and their positions, and the number of the fingerprint electrodes **174** and their positions may vary.

FIG. **4** is a right side view of a portable terminal according to an embodiment.

As shown in FIG. **4**, the portable terminal **100** includes two fingerprint recognition electrodes **174** at the right bezel. The light emitting diode **172** and the light receiving diode **173** for the PPG sensor **142***b* may be disposed adjacent to each of the fingerprint recognition electrodes **174**. Additionally, the ECG electrode **171** may be disposed adjacent to each of the fingerprint recognition electrodes **174**. Thereby, fingerprint measurement and blood movement measurement are possible at the same time.

In FIG. **4**, the number of the ECG electrodes **171** and their positions, the number of the light emitting diodes **172** and their position, the number of the light receiving diodes **173** and their positions, and the number of the fingerprint electrodes **174** and their positions may vary.

FIG. **5** is a view illustrating the front bottom of a portable terminal according to an embodiment.

As shown in FIG. **5**, the portable terminal **100** includes two ECG electrodes **171** at the front bottom. Each of the light emitting diode **172** and the light receiving diode **173** for the PPG sensor **142***b* may be disposed adjacent to the ECG electrode **171**. Thereby, ECG measurement and blood movement measurement are possible at the same time.

Moreover, the portable terminal **100** includes two fingerprint recognition electrodes **174** instead of the two ECG electrodes **171** at the front bottom. The light emitting diode **172** and the light receiving diode **173** for the PPG sensor **142***b* may be disposed adjacent to each of the fingerprint recognition electrodes **174**. Thereby, fingerprint measurement and blood movement measurement are possible at the same time.

In FIG. **5**, the number of the ECG electrodes **171** and their positions, the number of the light emitting diodes **172** and their position, the number of the light receiving diodes **173** and their positions, and the number of the fingerprint electrodes **174** and their positions may vary.

FIG. **6** is a view illustrating the front bottom of a portable terminal according to an embodiment.

As shown in FIG. **6**, the portable terminal **100** includes two fingerprint recognition electrodes **174** at the right bezel. The light emitting diode **172** and the light receiving diode **173** for the PPG sensor **142***b* may be disposed adjacent to each of the fingerprint recognition electrodes **174**. Additionally, the ECG electrode **171** may be disposed adjacent to each of the fingerprint recognition electrodes **174**. Thereby, fingerprint measurement and blood movement measurement are possible at the same time.

In FIG. **6**, the number of the ECG electrodes **171** and their positions, the number of the light emitting diodes **172** and their position, the number of the light receiving diodes **173** and their positions, and the number of the fingerprint electrodes **174** and their positions may vary.

In FIGS. **3** to **6**, the ECG electrode **171** or the fingerprint recognition electrode **174** may be disposed at a function button such as a power button, a home button, an event obtaining button, and a next event period playing button. Here, the event obtaining button may correspond to a recording button or a picture capturing button. The next event period playing button may correspond to a next image displaying button, a next page displaying button, a next music playing button, or a next video period playing button.

FIG. **7** is a front perspective view of a portable terminal according to an embodiment.

Referring to FIG. **7**, the portable terminal **100** may have a bar-shaped body. However, the present invention is not limited thereto, and thus may be applicable to various structures such as a slide type, a folder type, a swing type, and a swivel type, where at least two bodies are combined for relative movement.

Bodies **101** and **102** include a case (for example, casing, housing, and cover) constituting the outer appearance. In this embodiment, the case may be divided into the front case **101** and the rear case **102**. Various electronic components are embedded in a space between the front case **101** and the rear case **102**. At least one middle case may be additionally disposed between the front case **101** and the rear case **102**.

The cases may be formed by injecting synthetic resins or may be formed of metallic materials such as stainless steel (STS) or titanium (Ti).

The bodies **101** and **102** of the portable terminal **100** may include a display module **151**, a sound outputting module **152**, a camera **121**, a user input unit **130**, a mike **122**, and an interface **170**.

The display module **151** occupies a great part of the main surface of the front case **101**. The sound outputting module **152** and the camera **121** are disposed at an area adjacent to one end of the both ends of the display module **151**, and the user input unit **130** and the mike **122** are disposed at an area adjacent to the other end.

The user input unit **130** and the interface **170** may be disposed at the sides of the front case **101** and the rear case **102**.

The user input unit **130** may be manipulated in order to receive a command for controlling an operation of the portable terminal **100**.

The user input unit **130** may be called a manipulating portion, and may include a key button **131**. The user input unit **130** may be in a tactile manner through which a user manipulates it with tactile sense.

Additionally, according to an embodiment of the present invention, the proximity sensor **141**, and the plurality of ECG electrodes may be disposed at the bodies **101** and **102** of the portable terminal **100**.

The proximity sensor **141** is disposed at the front of the portable terminal **100** in order to detect an object that approaches a specific position of the body. For example, the proximity sensor **141** is disposed adjacent to the sound outputting module **152** that operates as a speaker outputting a call sound during a call mode and the ECG electrode **171** used for sensing ECG, so that whether the head of user approaches the sound outputting module **152** is sensed during a call mode.

Additionally, one of the plurality of ECG electrodes **171** may be disposed adjacent to the sound outputting module **152** at the front of the portable terminal **100**, and another may be disposed at the side of the portable terminal **100**. When one of the plurality of ECG electrodes **171** is disposed at the side of the portable terminal **100**, it may be disposed at the side of the front case **101**, the side of the rear case **102**, or the sides of the front case **101** and the rear case **102**.

The ECG electrode **171** disposed at the front of the portable terminal **100** may be used to sense an ECG signal of a user, contacting the ear or head of a user during a call.

The ECG electrode **171** disposed at the side of the portable terminal **100** may be used to sense an ECG signal of a user, contacting the hand of a user during a call.

The plurality of ECG electrode **171** may be disposed at a position where it can easily contact the skin surface of a user while the user makes a call using the portable terminal **100** or manipulates the portable terminal **100**.

FIG. **8** is a rear perspective view of a portable terminal according to an embodiment.

Referring to FIG. **8**, a camera **121'** may be additionally mounted at the body rear of the portable terminal **100**, i.e. the rear case **102**. The camera **121'** substantially may have an opposite capturing direction to the camera **121** of FIG. **2**, and may have different pixels than the camera **121**.

For example, the camera **121** may have low pixels in order to capture the face of a user and than transmit the captured face image to the other party without difficulties, and the camera **121'** may have high pixels in order to capture a general object without the need for transmission. The cameras **121** and **121'** may be installed at the terminal body in order to make rotation and popup possible.

A flash **123** and a mirror **124** may be additionally disposed adjacent to the camera **121'**. The flash **123** emits light toward an object when the camera **121'** captures the object. The mirror **124** may be used in order that a user looks at himself/herself when the user captures himself/herself (self-shooting) by using the camera **121'**.

A sound outputting module **152'** may be additionally disposed at the body rear of the portable terminal **100**. The sound outputting module **152'** may perform a stereo function together with the sound outputting module **152** of FIG. **2**, and also may be used for implementing a speaker phone mode during a call.

A broadcast signal receiving antenna **124** may be additionally disposed at the body side of the portable terminal **100**, in addition to an antenna for a call. The antenna **124** constituting part of the broadcast receiving module **111** of FIG. **1** may be installed to be drawn from the terminal body.

The power supply unit **190** is mounted at the body of the portable terminal **100** in order to supply power to the portable terminal **100**. The power supply unit **190** may be embedded in the portable terminal **100**, or may be installed to be detachable from the external body of the portable terminal **100**.

FIG. **9** is a view illustrating a body sensing accessory connected to a portable terminal according to an embodiment.

The body sensing accessory shown in FIG. **9** may be connected to the earphone jack **176** of the portable terminal **100**. Especially, the body sensing accessory shown in FIG. **9** may be an earphone or the headset connected to the earphone jack **176** of the portable terminal **100**. As shown in FIG. **9**, the body sensing accessory may include two sound outputting modules **152**. The light emitting diode **172** and the light receiving diode **173** for the PPG sensor **142*b*** may be disposed adjacent to each of the sound outputting modules **152**. By doing so, even if the portable terminal **100** does not provide a blood movement measurement function, a user may measure a blood movement, while listening to music.

Moreover, the body sensing accessory may include the two ECG electrodes **171** instead of the two sound outputting module **152**. Each of the light emitting diode **172** and the light receiving diode **173** for the PPG sensor **142*b*** may be disposed adjacent to the ECG electrode **171**. By doing so, even if the portable terminal **100** does not provide an ECG measurement

function and a blood movement measurement function, a user may measure an ECG and a blood movement at the same time.

Moreover, the body sensing accessory may include the two fingerprint recognition electrodes **174** instead of the two sound outputting modules **152**. The light emitting diode **172** and the light receiving diode **173** for the PPG sensor **142***b* may be disposed adjacent to each of the fingerprint recognition electrodes **174**. By doing so, even if the portable terminal **100** does not provide a fingerprint measurement function and a blood movement measurement function, a user may measure a fingerprint and a blood movement at the same time.

FIG. **10** is schematic view of a portable terminal having an earphone connected according to an embodiment.

Referring to FIG. **10**, the earphone **300** may be detachable to the main body of the portable terminal **100** through the earphone jack **176**.

The main body of the portable terminal **100** may have various types such as a slide type and a folder type. The main body of the portable terminal **100** is equipped with the earphone jack **176** from which the earphone **300** is detachable. The earphone jack **176** may include a predetermined number of connection terminals.

For example, if the earphone **300** is a 4-pole earphone, it includes a mike **300** for collecting a sound signal of a user in order to support Push To Talk (PTT) service, and accordingly, one of the connection terminals of the earphone jack **176** may include a mike terminal to deliver the user sound signal, collected by the mike **330**, into the portable terminal **100**.

Moreover, the earphone **300** may further include a plurality of ECG electrodes **341** in order to obtain an ECG signal of a user. When a user plugs the earphone **300** in the ears, electrodes **341** may be disposed at the main body of the earphone **300** in order to contact the skin surface of the user and sense an ECG signal.

Furthermore, if the earphone **300** includes a plurality of ECG electrodes **341** for sensing an ECG signal, the earphone jack **176** may further include a terminal for delivering ECG signals, collected by the plurality of ECG electrodes **341** for sensing an ECG signal, to the portable terminal **100**.

FIG. **11** is a view illustrating a bio information measuring device using a wired headset according to an embodiment. As shown in FIG. **11**, a portable terminal includes an embedded ECG sensor **142***c*, and an earphone jack **176** may include at least one pin for an audio signal and at least one pin for ECG signal.

As shown in FIG. **11**, the wired headset **50** includes at least one ECG electrode **50***a* disposed at a portion that contacts the ear and at least one ECG electrode **50***b* disposed at a portion, i.e. the outside of the wired headset **50**, where the hand frequently contacts when a user wears the wired headset **50**.

The headset **50** is connected to the earphone jack **176** of the portable terminal through a plug at the end of the cable. The earphone jack **176** includes a pin for outputting a bio signal such as an ECG signal measured by the headset **60** into the ECG sensor **142***c*, in addition to a pin (or terminal) for outputting an audio signal to the wired headset **50**.

The portable terminal **100** to which the plug of the wired headset **50** is connected may additionally include a contact sensing unit **102**, a multiplexer (MUX) **103**, and an ECG sensor **142***c*, in addition to an audio codec **240** and the control unit **180** in the portable terminal of FIG. **1**. However, if the portable terminal **100** does not include an ECG electrode, the MUX **103** may be unnecessary.

The contact sensing unit **102** senses whether the ECG electrode of the wired headset **50** and the ECG electrode of the portable terminal **100** contact the user's ear or hand.

According to a contact sensing state sensed by the contact sensing unit **102**, the control unit **180** controls the audio codec **240**, the MUX **103**, and the ECG sensor **142***c*.

When a user selects a predetermined music related application (for example, an MP3 function) by using the portable terminal **100**, the audio codec **240** outputs an audio signal (i.e. music) through an internal sound outputting module (i.e. a speaker). When the plug of the wired headset **50** is connected to the earphone jack **176**, the audio codec **240** senses it and then outputs the audio signal to the earphone jack **176** in order to output the audio signal to the wired headset **50**.

The MUX **103** delivers an ECG signal, sensed by the ECG electrode of the wired headset **50** or the ECG electrode of the portable terminal **100**, into the ECG sensor **142***c* according to a control MUX_CONT of the control unit **180**.

The ECG sensor **142***c* generates an analog ECG signal by using the potential difference of the ECG signal sensed through at least one ECG electrode at the wired headset **50** or one side of the portable terminal. In general, in relation to an ECG, a potential difference of an electrical signal varies according to a measurement position. For example, a portion such as the hand close to the heart has a high potential difference, so that an ECG waveform may be sensed well. However, a portion such as the ear far from the heart has a low potential difference, so that an ECG waveform may not be sensed well.

Therefore, the control unit **180** determines whether the hand or the ear contacts the ECG electrode or whether one hand or both hands contact(s) the ECG electrode even when the hand contacts the ECG electrode, in order to output different control signals CONT to the ECG sensor **142**. Therefore, the ECG sensor **142***c* amplifies an ECG signal with a gain determined by the control signal CON in order to generate the amplified ECG signal. The amplified ECG signal is delivered to the control unit **180**, so that the control unit **180** displays the amplified ECG signal or information, obtained from the amplified ECG signal, on the display unit **151**. Thus, the information on the display unit **151** is provided to a user.

Especially, the control unit **180** of FIG. **11** may include an MCU or an application program separated from the control unit **180** of FIG. **1**. This is for the load of the control unit **180**, and the control unit **180** of FIG. **11** is connected to the control unit **180** of FIG. **1**. Additionally, pins (or terminals) of the earphone jack are divided for an audio signal and an ECG signal.

Also, when ear contact and hand contact occur frequently, corresponding contact is processed according to a priority. As one example, when at least two contacts, i.e. ear and hand contacts, occur, for example, the hands contacts the electrode of the portable terminal while a user wears the headset, a priority is given to the electrode at the ear.

FIG. **12** is a view of a gain controlling unit equipped in an ECG sensor according to an embodiment.

Referring to FIG. **12**, a switch SW switches one of resistors R**1**, R**2**, and R**3** according to a control signal CONT outputted from the control unit **180**. The amplification unit AMP amplifies an input signal (i.e. an electrical signal outputted from an electrode) by a gain determined by the switched resistor. At this point, when the both ears contact an ECG electrode of the headset, the resistor R**1** is connected, and when the hand contacts an ECG electrode of the headset, the resistor R**2** is connected, and when the hand contacts an ECG electrode of the portable terminal **100**, the resistor R**3** is connected.

Listening to music and user's health check in an ECG sensor application device by using the headset, and a control operation of a portable terminal according to an embodiment will be described below with reference to FIG. **11**.

1. Listening to Music and User's Health Check

When a user selects a predetermined music related application, for example, an MP3 function, by using a portable terminal, the audio codec **240** outputs an audio signal (i.e. music) through the internal sound outputting module (i.e., a speaker) **152**.

During this state, when the plug of the headset **50** is connected to the earphone jack **176** of the portable terminal **100**, the audio codec **240** does not output the audio signal to the internal sound outputting module (i.e. a speaker) **152** according to an earphone jack detect signal EARJACK DET, but outputs the audio signal to the earphone jack **176**, so that the audio signal is outputted to the ear speaker (not shown) of the headset **50**. As a result, a user may listen to music, wearing the headset **50**.

While a user listens to music, he/she executes a predetermined application for ECG measurement, the ECG electrode **50***a* at the ear contact portion, i.e. the inside of the headset **50**, outputs an ECG signal EAR_R and EAR_L, measured from the both ears of the user, to the earphone jack **176** of the portable terminal. The contact sensing unit **102** detects that a current user wears the headset and the contact points of the headset are the both ears on the basis of the ECG signals EAR_R and EAR_L received through the receiving pin (i.e. a terminal) of the earphone jack **176**, and then, outputs the detected contact state to the control unit **180**.

According to the contact detect state, the control unit **180** outputs a control signal MUX_CONT to the MUX **103**, and also outputs a gain control signal CONT to the ECT sensor **142***c* in order to control an amplification rate of an ECG signal. The MUX **103** outputs the ECG signal EAR_R and EAR_L, applied through the earphone jack **176**, to the ECG sensor **142***c* according to the control signal MUX_CONT.

Accordingly, the ECG sensor **142***c* amplifies the ECG signal EAR_R and EAR_L, inputted through the MUX **103**, by different application rates according the gain control signal CONT outputted from the control unit **180**, and then, outputs the amplified ECG signal to the control unit **180**. The control unit **180** displays the corresponding ECG signal on the display unit **151**.

According to embodiments, an audio signal and an ECG signal are physically separated through the inner pin (i.e. a terminal) of the earphone jack **176**. Therefore, while a user listens to music through the headset, a bio signal measured from the headset is detected through the ECG sensor **142***c* of the portable terminal in order to display a user's ECG waveform. Therefore, ECG measurement and listening to music are easily performed.

Moreover, while a user wears the headset **50** and executes an application for ECG measurement without executing an MP3 function, the headset **50** may be only used for the purpose of ECG measurement.

2. Operation Control of Portable Terminal on the Basis of Ear Contact and Hand Contact of Headset

As mentioned above, ECG measurement is performed through the ECG electrode **50***a* attached to the inside of the headset **50**. However, controls related to operations performed in the portable terminal such as listening to music and call reception are performed basically through the contact of the headset electrode **50***a* at the outside of the headset **50**. However, since the both sides or one side of the headset are or is available, speaking accurately, a combination of the electrodes **50***a* and **50***b* at the headset **50** may be mainly used. Additionally, as mentioned in the above embodiment, ECG electrodes at different positions may be used for the operation control of the portable terminal. However, in relation to the operation of the portable terminal **100**, the priority of the ECT electrode of the headset **50** is high and the priority of the ECG electrode at the portable terminal may be low.

Accordingly, while a user wears the headset **50**, even if one hand contacts the electrode **50***b* of the headset **50** and the other hand contacts the ECG electrode **171** of the portable terminal **100**, an operation of the portable terminal **100** is controlled according to the contact of the headset electrode **50***b*. However, when a user wears the headset **50**, in case that he/she contacts the ECG electrode **171** without contacting the headset electrode **50***b*, an operation of the portable terminal **100** may be controlled according to the ECG electrode **171**.

Table 1 and Table 2 illustrate cases of when an operation of a portable terminal is controlled according to the ear contact and hand contact of the headset.

TABLE 1

User gesture	Contact point with headset	Operation of portable terminal
Detach headset	None	None/pause
Wear both sides of headset	Both ears	MP3 play
Wear both sides of headset + one hand contact	Both ears + one hand	Forward/Reverse
Wear both sides of headset + one hand double contact	Both ears + one hand	Pause/play
Wear one side of headset	One ear	Pause

TABLE 2

User gesture	Contact point with headset	Operation of portable terminal
Detach headset	None	None
Wear headset (one side or both sides)	One ear or both ears	Call connection when receiving a call
Wear headset + one hand contact	One ear or both ears + one hand	1. call connection when receiving a call 2. call waiting
Detach headset	None	End

As shown in FIG. **11**, the contact sensing unit **102** determines whether a user wears the headset **50** or a user's hand contacts an ECG electrode according to the voltage size of an ECG signal measured from a plurality of ECG electrodes **50***a* attached to the inside of the headset **50**, a plurality of ECG electrodes **50***b* attached to the outside of the headset **50**, and a plurality of ECG electrode **171** attached to a portable terminal. The reason is that an ECG signal measured from the ear is different from that measured from the hand, and furthermore, hand contacts on the headset and the portable terminal may be different.

Accordingly, the control unit **180** may perform an MP3 playback control (for example, playback, fast forward, rewind, pause, and other), a call operation (for example, call connection and call end), a lock control (for example, screen lock release), according to a contact detect state outputted from the contact sensing unit **102**.

Hereinafter, controlling MP3 playback and a call connection operation according to ear contact and hand contact will be described below.

As shown in Table 1, when the headset is taken off with no function in execution, no operation is performed. However, when a user wears and takes off the headset **50** while an MP3 function is executed, the MP3 playback stops temporarily. And, the MP3 playback starts again when the user wears the headset **50** again.

Moreover, while a user wears the both sides of the headset **50**, in case that the one hand contacts the electrode **50***b* (or the

electrode **171**) at the side of the headset **50**, the control unit **180** may perform a forward or reverse operation on the MP3 playback according to a touch of the right-side electrode or the left-side electrode.

Moreover, while a user wears the both sides of the headset **50**, in case that one hand double-contacts the headset **50***b* (or the electrode **171**), the control unit **180** stops or perform the MP3 playback. At this point, the double contact may be distinguished by the right or left electrode. Additionally, when only one side of the headset remains after a user wears the both sides of the headset, the control unit **180** stops the MP3 playback.

Moreover, the control unit **180** may process a call reception according to the ear contact and hand contact of the headset. As shown in Table 2, when a call is received with the both sides of the headset put on (for example, one side or both sides), a call is immediately connected. Additionally, when a call is received with the both sides of the headset put on (for example, one side or both sides), a call connection is performed, and later, when one hand contacts the electrode **50***a* or **171**, call waiting is performed (if the one hand contacts again, a call is performed). Afterward, when the user takes off the headset, the control unit **180** ends the call.

FIG. **13** is a view illustrating a bio information measuring device using a wired headset according to another embodiment. Although an audio signal and an ECG signal are separated by increasing the number of pins in the earphone jack **176** according to the embodiment of FIG. **11**, the embodiment of FIG. **13** uses the earphone jack **176** as it is but uses a duplexer **105** that separates TX/RX signals by the frequency band.

That is, the duplex **105** outputs an audio signal of about 20 Hz, which is to be transmitted, to the earphone jack **176**, and delivers an ECG signal of about 20 Hz, received from the headset **50** through the earphone jack **176**, to the contact sensing unit **102**. Since other operations are the same as those of FIG. **11**, detailed description will be omitted.

The ECG sensor **142***c* may be embedded in the portable terminal. However, the present invention is not limited thereto, and the ECG sensor **142***c* may be embedded in the headset. In this case, the headset analyzes an ECG signal in order to measure ECG, and then transmits it the portable terminal.

FIG. **14** is a view illustrating a bio information measuring device using a wired headset according to another embodiment. This embodiment includes the ECG sensor embedded in the headset.

As shown in FIG. **14**, when a user executes an MP3 function with the headset **50** connected to the portable terminal **100**, an audio signal outputted from an audio codec **50-2** is outputted to an ear speaker **50-5** of the headset **50** through the earphone jack **176**.

When the headset **50** is connected to the earphone jack **176** of the portable terminal **100** or an audio signal is outputted through the ear speaker **50-5**, a contact sensing unit **50-2** detects the contact (for example, ear or hand contact) from the headset **50** in order to output a contact detect signal to an MCU **50-1**. The MCU **50-1** determines the types of contact (for example, ear or hand) according to the contact detect signal outputted from the contact sensing unit, and then, outputs a control signal MUX_CONT for controlling a MUX **50-3** and a control signal CONT for controlling a gain of an ECG sensor **50-4**.

The MUX **50-3** operates according to the control signal MUX_CONT in order to output the ECG signal, detected by the electrode **50***a*, to the ECG sensor **50-4**, and outputs a signal Hand R and Hand L, detected by the electrode **50***b* at the side of the headset, to the earphone jack **176** of the portable terminal **100**.

The ECG sensor **50-4** amplifies an ECG signal detected from the ear according to the gain control signal CONT outputted from the MCU **50-2**, and outputs the amplified ECG signal to the MCU **50-2**. Then, the MCU **50-1** outputs the ECT signal amplified by the ECG sensor **50-4** to the earphone jack **176** of the portable terminal through a serial interface.

Accordingly, the control unit **100** of the portable terminal displays the ECG waveform received through the earphone jack **176** on the display unit **151**. While an MP3 function is executed or a call is received, the control unit **100** controls various operations of the portable terminal (for example, MP3 playback, call reception, and screen lock release) as shown in Table 1 and Table 2, by using the hand detect signals Hand R and Hand L, which are detected by the electrode **50***b* of the headset and delivered through the earphone jack **176**, and the hand detect signals Hand R and Hand L, which are detected by the electrode **171** of the portable terminal.

In relation to the operations of FIGS. **11** to **14**, the electrode **50***b* of the headset **50** and the electrode **171** of the portable terminal may be used for detecting an ECG signal and also controlling an operation of the portable terminal. Especially, when the ECG sensor is embedded in the headset **50**, the headset **50** measures a user's ECG signal and transmits it to the portable terminal.

According to the method and structure of applying an ECG sensor by using the headset shown in FIGS. **11** to **14**, the headset is connected to the portable terminal by a wire. However, the present invention is not limited thereto. That is, when the headset is connected to the portable terminal wirelessly, the almost same operation is provided.

FIG. **15** is a view illustrating a bio information measuring device using a wireless headset according to an embodiment.

The wireless headset **51** includes a wireless communication unit **50-1**. The wireless communication unit **51-1** mainly performs short range communication such as Bluetooth.

When a user executes an MP3 function in the portable terminal **100** with the wireless headset **51** put on, the wireless communication unit **11** transmits an audio signal through an antenna according to a control of the control unit **180**. Then, the transmitted audio signal is received by an antenna of the wireless headset **51** and is applied to the wireless communication unit **51-2**. Accordingly, a DSP **51-2** processes the received audio signal and outputs it to an ear speaker (not shown) in order to play music.

While the music is played or an MP3 function is not executed, a user selects an application for ECG measurement from a menu and executes it. Then, a corresponding signal is delivered to the headset **51** and the DSP **51-2** starts an operation for ECG measurement.

That is, the electrode at the inside of the headset **51** outputs a user's bio signal, i.e. an ECG signal, and the electrode at the outside of the headset **51** outputs user's hand touché signals Hand_R and Hand_L. The contact sensing unit **51-2** detects hand contact or ear contact from the signals outputted from the electrodes **50***a* and **50***b* in order to a contact detect signal to the DSP **51-2**. Also, the ECG sensor **51-3** amplifies the ECG signal measured by the electrode **50***a* according to the gain control signal of the DSP **51-2** in order to output it to the DSP **51-2**.

Accordingly, the DSP **51-2** outputs the ECG signal measured by the ECG sensor **51-3** to the portable terminal **100** through the wireless communication unit **51-2**, and the con-

trol unit **180** displays the ECG waveform received through the wireless communication unit **110** on the display unit **151**.

Moreover, while the MP3 function is executed to play a predetermined music through the ear speaker of the wireless headset **51**, as shown in Table 1, if a user contacts the electrode **50***b* or changes a wearing state of the headset, the contact sensing unit **51-4** determines hand contacts Hand_R and Hand_L and ear contacts Ear_R and Ear_L in order to output a determination result to the DSP **51-2**, and generates an operation control signal for controlling an operation of the portable terminal according to the contact detect signal outputted from the contact sensing unit **51-4**, in order to transmit the operation control signal to the wireless communication unit **51-1**.

Accordingly, the control unit **180** of the portable terminal controls an MP3 function as shown in Table 1 according to the operation control signal received through the wireless communication unit **110**. Moreover, while a user wears the wireless headset **51** or listens to music with the wireless headset **51** put on, a call is received, as shown in Table 2, a call receiving operation is performed according to a contact state of the two electrodes **50***a* and **50***b* of the wireless headset **51**.

Next, a circuit of a portable terminal according to an embodiment will be described below with reference to FIG. **16**.

FIG. **16** is a block diagram illustrating part of a circuit of a portable terminal according to an embodiment.

As shown in FIG. **16**, the portable terminal **100** further includes a switch **310**, a noise filter **200**, an analog-digital converter (ADC) **210**.

A plurality of ECG electrodes **171** correspond to ports for receiving an ECG signal from a body.

The switch **310** connects the two body-contacted electrodes among the plurality of ECG electrode **171** to the ECG sensor **142***c*, or to the body communication module **116** according to a control signal of the control unit **180**.

The ECG sensor **142***c* detects an analog ECG signal from the signal of the two body-contacted electrodes.

The ADC **210** converts the analog ECG signal into a digital ECG signal.

The noise filter **200** removes the noise from the digital ECG signal in order to generate the filtered ECG signal, and then delivers the filtered ECG signal to the control unit **180**.

The body communication module **116** modulates the data received from the control unit **180** for body communication, and outputs the modulated signal to the two body-contacted electrodes through the switch **310**. Additionally, the body communication module **116** demodulates the received signal from the two body-contacted electrodes, and then, delivers the demodulated data to the control unit **180**. The modulation for body communication may be Frequency Modulation (FM). The demodulation for body communication may be demodulation corresponding to the FM.

The control unit **180** comparers a pattern of the ECG signal received through the ECG sensor **142***c* with an ECG pattern of a user previously stored in the memory **160**. If they are identical, the control unit **180** controls the switch **310** to be connected to the body communication module **116**.

FIG. **17** is schematic structure of a switch according to an embodiment.

Referring to FIG. **17**, the switch **310** may include a first transistor TR**1** and a second transistor TR**2** in order for an ECG electrode **171** at the body of the portable terminal **100**, an ear contact electrode **50***a* of an ear accessory, and a hand contact electrode **50***b*. It is assumed that the first transistor TR**1** and the second transistor TR**2** are a Field Effect Transistor (FET), but may be different kinds of transistors.

The first transistor TR**1** related to the ECG electrode **171** includes a gate electrode through which a control signal is supplied, a drain electrode connected to the ECG electrode **171**, and a source electrode connected to the ECG sensor **142***c*. If the number of the ECG electrodes **171** is more than two, the number of the first transistors TR**1** may be more than two.

The second transistor TR**1** related to the ECG electrode **171** includes a gate electrode through which a control signal is supplied, a drain electrode connected to the ECG electrode **171**, and a source electrode connected to the body communication module **116**. If the number of the ECG electrodes **171** is more than two, the number of the second transistors TR**2** may be more than two.

The first transistor TR**1** related to the ear contact ECG electrode **50***a* or **341** of the ear accessory includes a gate electrode through which a control signal is supplied, a drain electrode connected to the ear contact ECG electrode **50***a* or **341**, and a source electrode connected to the ECG sensor **142***c*. If the number of the ear contact ECG electrodes **50***a* or **341** is more than two, the number of the first transistors TR**1** may be more than two.

The second transistor TR**2** related to the ear contact ECG electrode **50***a* or **341** of the ear accessory includes a gate electrode through which a control signal is supplied, a drain electrode connected to the ECG electrode **50***a* or **341**, and a source electrode connected to the body communication module **116**. If the number of the ECG electrodes **50***a* or **341** is more than two, the number of the second transistors TR**2** may be more than two.

The first transistor TR**1** related to the hand contact ECG electrode **50***b* includes a gate electrode through which a control signal is supplied, a drain electrode connected to the ECG electrode **50***b*, and a source electrode connected to the ECG sensor **142***c*. If the number of the ECG electrodes **50***b* is more than two, the number of the first transistors TR**1** may be more than two.

The second transistor TR**2** related to the hand contact ECG electrode **50***b* includes a gate electrode through which a control signal is supplied, a drain electrode connected to the ECG electrode **50***b*, and a source electrode connected to the body communication module **116**. If the number of the ECG electrodes **50***b* is more than two, the number of the second transistors TR**2** may be more than two.

Additionally, according to an embodiment of the present invention, the control unit **180** provides a control signal to the switch **310** based on whether an ear accessory such as the earphone **300** or the headset **51** is attached to the portable terminal **100**, in order to connect the electrodes **171** at the body outside surface of the portable terminal **100** or the electrodes **341** at the main body of the earphone **300** to the ECG sensor **142***c*. Additionally, the control unit **180** provides a control signal to the switch **310** based on whether an ear accessory is attached to the portable terminal **100**, in order to connect the electrodes **171** at the body outside surface of the portable terminal **100** or the electrodes **341** at the main body of the earphone **300** to the body communication module **116**.

For example, if an ear accessory is attached to the portable terminal **100**, the control unit **180** provides a control signal to the switch **310** in order to connect the ear contact ECG electrode of an ear accessory and/or the hand contact ECG electrode of an ear accessory to the ECG sensor **142***c*.

Additionally, if an ear accessory is attached to the portable terminal **100**, the control unit **180** provides a control signal to the switch **310** in order to connect the ear contact ECG elec-

trode of an ear accessory and/or the hand contact ECG electrode of an ear accessory to the body communication module **116**.

Additionally, for example, if an ear accessory is not attached to the portable terminal **100**, the control unit **180** may connect the electrodes **171** at the body outside surface of the portable terminal **100** to the ECG sensor **142***c* and/or the body communication module **116**.

Again, referring to FIG. **17**, the switch **203** controls the ECG signal obtained through the ECG electrodes **171**, **50***a*, **50***b*, or **341** to be inputted into the ECG sensor **142***c* and/or the body communication module **116**, on the basis of the control signal.

According to an embodiment, if an ear accessory is not attached to the portable terminal **100** and the proximity sensor **141***a* detects the proximity of an object during a call, the control unit **180** may connect the electrodes **171** at the body outside surface of the portable terminal **100** to the ECG sensor **142***c* and/or the body communication module **116**.

According to an embodiment, if an ear accessory is not attached to the portable terminal **100**, the control unit **180** may connect the electrode **50***a*, **50***b*, or **341** at the ear accessory to the ECG sensor **142***c* and/or the body communication module **116**.

Moreover, only when the portable terminal **100** operates in a call mode, the control unit **180** may activates the proximity sensor **141***a*. Accordingly, the proximity sensor **141***a* is activated only in a call mode, so that it detects an object approaching the sound outputting module **152** and outputs a detect signal as a control signal.

The control unit **180** analyzes an ECG signal in order to check a user's emotion state and health state.

If no ECG electrode is connected to the ECG sensor **142***c*, the control unit **180** cuts off power to the ECG sensor **142***c*, the ADC **210**, and the noise filter **200** in order to reduce power consumption.

Next, the noise filer **200** according to various embodiments will be described with reference to FIGS. **18** to **21**.

Unlike dedicated ECG measurement equipment, the portable terminal **100** is exposed to various noise environments. For example, when the portable terminal measures ECG, a text message or a call may arrive, and at this point, alarm sound, bell sound, and vibration may be the noise of an ECG signal. Moreover, a user may measure ECG in order to check a user's health or record a user's current emotion state while being on the move, listening to music, watching a video, or being at a concert. Noise may occur during winter due to electrostatic, and noise of about 60 Hz frequency may occur due to AC power during charging of the portable terminal **100**.

As mentioned above, when ECG is measured through the portable terminal **100**, a noise filter that is applicable various noise environment is required.

Especially, while the control unit **180** measures ECG through the ECG sensor **142***c*, once a text message or a call reception is detected, the control unit **180** turns off the alarm unit **153**.

Hereinafter, a filter that removes another noise will be described.

FIG. **18** is a block diagram of a noise filter according to an embodiment.

As shown in FIG. **18**, the noise filter **200** includes a noise detecting unit **220**, and a noise removing unit **230**.

The noise detecting unit **220** detects the noise from a digital ECG signal. The detected noise may be a noise signal on a time axis or a noise frequency pattern on a frequency axis.

The noise removing unit **230** removes the noise from a digital ECG signal. Especially, when the noise detecting unit **220** detects a noise signal, the noise removing unit **230** may correspond to a subtraction unit that reduces a noise signal from a digital ECG signal. Additionally, when the noise detecting unit **220** detects a noise frequency pattern, the noise removing unit **230** may correspond to a notch filter that cuts off a noise frequency pattern from a digital ECG signal.

FIG. **19** is a block diagram of a noise filter according to an embodiment.

As shown in FIG. **19**, the noise filter **200** includes a noise detecting unit **220**, and a noise removing unit **230**. The noise detecting unit **220** includes at least one typical noise source detecting unit **221** and a comparison unit **222**.

The typical noise source detecting unit **221** detects a typical noise source and outputs a noise source signal. The typical noise source detecting unit **222** may correspond to a vibration sensor, an electromagnetic sensor, a source detecting unit, and an AC power detecting unit. The vibration sensor detects vibration and outputs a noise source signal corresponding to the vibration detect signal. The electromagnetic sensor detects an electromagnetic wave and outputs a noise source signal corresponding to the electromagnetic detect signal. The sound detecting unit detects a sound source and outputs a noise source signal corresponding to the signal source. The AC power detecting unit detects an AC power and outputs a noise source signal corresponding to the AC power signal.

The comparison unit **222** compares a digital ECG signal with a noise source signal and outputs noise. The comparison unit **222** outputs a noise signal or a noise frequency pattern.

FIG. **20** is a block diagram of a noise filter according to an embodiment.

As shown in FIG. **20**, the noise filter **200** includes a noise detecting unit **220**, and a noise removing unit **230**. The noise detecting unit **220** includes an amplifier **223** and a saturation interval detecting unit **224**.

The amplifier **223** amplifies a digital ECG signal and generates an amplified digital ECG signal.

The saturation interval detecting unit **224** detects a saturation interval from the amplified ECG signal to detect the noise corresponding to the detected saturation interval. The saturation interval detecting unit **224** outputs a noise signal or a noise frequency pattern.

Through the noise filter of FIG. **20**, noise due to electrostatic during winter or noise of about 60 Hz frequency during charging of the portable terminal **100** may be removed.

FIG. **21** is a block diagram of a noise filter according to another embodiment.

As shown in FIG. **21**, a plurality of noise filters **200** may be connected in series. For example, the portable terminal **100** may include a first filter corresponding to the noise filter of FIG. **19** and a second filter corresponding to the noise filter of FIG. **20**.

With reference to FIGS. **22** and **23**, an earphone jack type photoplethysmographic (PPG) signal sensor and a portable terminal supporting the same will be described.

FIG. **22** is a view of an earphone jack type PPG sensor according to an embodiment.

As shown in FIG. **22**, the earphone jack type PPG sensor **142***b* includes a light emitting diode **172**, a light receiving diode **173**, a current-voltage (I-V) converter **720**, a filter **730**, an amplifier **735**, and a plug **740**. The plug includes a mike signal port **740***a*, a first ear speaker port **740***b*, a second ear speaker port **740***c*, and a ground port **740***d*.

The anode terminal of the light emitting diode **172** is connected to the second ear speaker port **740***c*, and its cathode terminal is connected to the ground port **740***d*. The anode terminal and the cathode terminal of the light receiving diode **173** are respectively connected to two input terminals of the

I-V converter **720**. The output terminal of the I-V converter **720** is connected to the input terminal of the filter **730**. The output terminal of the filter **730** is connected to the input terminal of the amplifier **735**. The output terminal of the amplifier **735** is connected to the mike signal port **740***a*.

FIG. **23** is a block diagram illustrating additional components of a portable terminal according to an embodiment.

As shown in FIG. **23**, the portable terminal **100** includes an earphone jack **176**, an audio codec **240**, an ADC **250**, and a switch **260**. The earphone jack **176** includes a mike signal port **176***a*, a first ear speaker port **176***b*, a second ear speaker port **176***c*, and a ground port **176***d*.

The input terminal of the ADC **250** is connected to the mike signal port **176***a*. The output terminal of the ADC **250** is connected to the control unit **180**. One end of the switch **260** is connected to the mike signal port **176***a* and the other end is connected to the mike signal input terminal of the audio codec **240**. The first ear speaker port **176***b* and the second ear speaker port **176***c* are connected to the two audio output terminal of the audio codec, respectively.

In order to use the earphone jack **176** for audio usually, the control unit **180** provides a control signal to the switch **260** in order to turn it on.

Once the plug **740** is inserted into the earphone jack **176**, the mike signal port **740***a*, the first ear speaker port **740***b*, the second ear speaker port **740***c*, and the ground port **740***d* are connected to the mike signal port **176***a*, the first ear speaker port **176***b*, the second ear speaker port **176***c*, and the ground port **176***d*, respectively.

Then, the light emitting diode **172** emits light by an initial voltage applied to the second ear speaker port **176***c*.

Moreover, the I-V converter **720**, the filter **730**, and the amplifier **735** operate abnormally by an initial voltage applied to the first ear speaker port **176***b*. That is, the light receiving diode **173** receives the light emitted from the light emitting diode **172** in order to generate a current signal. The I-V converter **720** converts the generated current signal into a voltage signal by an initial voltage. The filter **730** filters a voltage signal by an initial voltage in order to generate a filtered voltage signal. The amplifier **735** amplifies the voltage signal filtered by an initial voltage in order to generate an initial PPG signal.

The initial PPG signal is not an accurate blood movement measurement signal, but increases a DC level of the mike signal port **176***a*.

The ADC **250** converts the initial PPG signal into a digital signal and provides it to the control unit **180**.

When the control unit **180** detects a DC level increase of the mike signal port **176***a*, it is recognized that the PPG sensor **142***b* is inserted into the earphone jack **176**. Moreover, in order to use the earphone jack **176** for the PPG sensor **142***b*, the control unit **180** provides a control signal to the switch **260** in order to turn it off.

Moreover, in order to provide stable power to the PPG sensor **142***b*, the control unit **180** controls the audio codec **240** in order to provide DC voltage to the first ear speaker port **176***b* and the second ear speaker port **176***c*.

Once stable power is provided to the PPG sensor **142***b*, the light emitting diode **172** emits light normally by the DC voltage applied to the second ear speaker port **740***c*. Moreover, the I-V converter **720**, the filter **730**, and the amplifier **735** operate normally by the DC voltage applied to the first ear speaker port **740***b*. Accordingly, the amplifier **735** provides a normal blood movement measurement signal to the mike signal port **740***a*, and the ADC **250** converts a normal blood movement measurement signal into a digital signal and provides it to the control unit **180**.

Then, a method of changing a mode of a portable terminal will be described with reference to FIGS. **24** to **27**.

FIG. **24** is a flowchart of a mode changing method according to an embodiment.

First, the control unit **180** of the portable terminal **100** is in a first mode M**1** in operation S**201**. According to an embodiment, the first mode M**1** may be a sleep mode. According to an embodiment, the first mode M**1** may be a call reception state. According to an embodiment, the first mode M**1** may be a message reception state.

In the first mode M**1**, the control unit **180** confirms a DC level increase of an ECG signal in operation S**203**. When the user's hand contacts one of the plurality of ECG electrodes **171**, the DC level of an ECG signal is increased, but an ECG waveform does not occur. When the user's hand contacts at least two of the plurality of ECG electrodes **171**, the DC level of an ECG signal is increased, and an ECG waveform occurs.

Once the DC level of an ECG signal is increased, the control unit **180** recognizes that interrupt corresponding to a body contact input occurs in operation S**205**, and changes the first mode M**1** into a second mode M**2** in response to interrupt corresponding to a body contact input in operation S**207**.

In the second mode M**2**, the control unit **180** confirms the detection of an ECG waveform in operation S**209**. In general, when the user's hand contacts at least two of the plurality of ECG electrodes **171**, an ECG waveform occurs.

Once an ECG waveform is detected, the control unit **180** recognizes that interrupt corresponding to a grip input occurs in operation S**211**, and changes the second mode M**2** into a third mode M**3** in response to interrupt corresponding to the grip input in operation S**213**.

In the third mode M**2**, the control unit **180** confirms the detection of a squeeze waveform in operation S**215**. In general, when the user's hand contacts at least two of the plurality of ECG electrodes **171**, a user squeezes the portable terminal **100**, an electromyogram (EMG) waveform occurs due to the strength of an EMG signal.

Once an EMG waveform is detected, the control unit **180** recognizes that interrupt corresponding to a squeeze input occurs in operation S**217**, and changes the third mode M**3** into a fourth mode M**4** in response to interrupt corresponding to the squeeze input in operation S**219**.

In the fourth mode M**4**, the control unit **180** confirms a pattern of the received ECG signal is identical to a pattern of a user's ECG signal in operation S**221**.

Once they are identical, the control unit **180** determines that a user authentication is successful, and changes the fourth mode M**4** into a fifth mode M**5**.

FIG. **25** is a graph illustrating a relation between a plurality of modes and an ECG signal according to an embodiment.

As shown in FIG. **25**, when the DC level of an ECG signal is less than the predetermined level, the control unit **180** is in the first mode M**1**.

When the user's hand contacts one of the plurality of ECG electrodes **171**, the DC level of an ECG signal becomes more than the predetermined level, and the control unit **180** changes the first mode M**1** into the second mode M**2**.

When the user's hand contacts at least two of the plurality of ECG electrodes **171**, an ECG waveform occurs, and the control unit **180** changes the second mode M**2** into the third mode M**3**.

When the user's hand contacts at least two of the plurality of ECG electrodes **171** and the user squeezes the portable terminal **100**, as shown in FIG. **25**, an EMG waveform occurs, and the control unit **180** changes the third mode M**3** into the fourth mode M**4**.

When the user's hand contacts at least two of the plurality of ECG electrodes **171** and the user release the portable terminal **100**, an ECG waveform occurs again. At this point, the control unit **180** performs user authentication and it is successful, the control unit **180** changes the fourth mode M**2** into the fifth mode M**5**.

FIG. **26** is a mode changing graph according to an embodiment.

As shown in FIG. **26**, when a DC level increase of an ECG signal is detected in the first mode M**1**, the control unit **180** changes the first mode M**1** into the second mode M**2**.

Once an ECG waveform occurs in the second mode M**2**, the control unit **180** changes the second mode M**2** into the third mode M**3**. When the DC level of an ECG signal maintains a low level for a predetermined time in the second mode M**2**, the control unit **180** changes the second mode M**2** into the first mode

Once an EMG waveform occurs in the second mode M**2**, the control unit **180** changes the second mode M**2** into the third mode M**3**. When the DC level of an ECG signal maintains a low level for a predetermined time in the third mode M**3**, the control unit **180** changes the third mode M**3** into the first mode M**1**. If an ECG waveform is not detected for a predetermined time in the third mode M**3**, the control unit **180** changes the third mode M**3** into the second mode M**2**.

Once an ECG waveform occurs in the fourth mode M**4**, the control unit **180** performs user authentication, and if it is successful, changes the fourth mode M**4** into the fifth mode M**5**. When the DC level of an ECG signal maintains a low level for a predetermined time in the fourth mode M**4**, the control unit **180** changes the fourth mode M**4** into the first mode M**1**. If an ECG waveform is not detected for a predetermined time in the fourth mode M**4**, the control unit **180** changes the fourth mode M**4** into the second mode M**2**.

When the DC level of an ECG signal maintains a low level for a predetermined time in the fifth mode M**5**, the control unit **180** changes the fifth mode M**5** into the first mode M**1**. If an ECG waveform is not detected for a predetermined time in the fifth mode M**5**, the control unit **180** changes the fifth mode M**5** into the second mode M**2**.

According to an embodiment, if user authentication is successful through an ECG signal and an EMG waveform occurs in the third mode M**3**, the control unit **180** changes the third mode M**3** into the fourth mode M**4**. In this case, since the user authentication is performed, the control unit **180** may not perform user authentication in the fourth mode M**4**.

In the above, the first mode M**1**, the second mode M**2**, the third mode M**3**, the fourth mode M**4**, and the fifth mode M**4** are mentioned, but some of them may be omitted. That is, according to an embodiment, the first mode M**1** may be omitted. According to an embodiment, the fourth mode M**4** may be omitted. According to an embodiment, the fifth mode M**5** may be omitted. According to an embodiment, the third mode M**3** and the fourth mode M**4** may be omitted.

Additionally, at least two modes of the above modes may be combined to constitute one mode. According to an embodiment, the first mode M**1** and the second mode M**2** may be combined. According to an embodiment, the second mode M**2** and the third mode M**3** may be combined. According to an embodiment, the third mode M**3** and the fourth mode M**4** may be combined.

Furthermore, some changing paths may be omitted. For example, a changing path from the third mode M**3** into the first mode M**1** may be omitted.

A condition for changing one mode to another mode may be changed.

According to an embodiment, modes may be divided based on before and after an EMG waveform occurs. At this point, if a previous mode corresponds to a terminal lock state and a subsequent mode corresponds to a terminal unlock state, a user may unlock the terminal by squeezing it. Additionally, if a previous mode corresponds to a sleep state and a subsequent mode corresponds to a wake state, a user may wake the terminal by squeezing it. If a previous mode corresponds to a call reception state and a subsequent mode corresponds to a call state, a user may make a call by squeezing the terminal. If a previous mode corresponds to a message reception state and a subsequent mode corresponds to a message displaying state, a user may confirm the message by squeezing the terminal. If a previous mode corresponds to an application standby state and a subsequent mode corresponds to an application execution state, a user may execute the application by squeezing the terminal. Additionally, if a previous mode corresponds to a content's one interval playback state and a subsequent mode corresponds to a content's next interval playback state, a user may turn a page over, display the next image, or play the next music, by squeezing the terminal.

FIG. **27** is a view of an ECG pattern according to an embodiment.

As shown in FIG. **27**, an ECG signal includes a P point, a Q point, an R point, an S point, and a T point. Through these, several segments such as a heart rate, PR interval, PR complex, QRS complex, ST segment, and QT interval may be extracted from an ECG signal. Some segments are unique to each other. Accordingly, the portable terminal **100** may obtain an ECG pattern from the segments, and may perform ECG authentication through the obtained ECG pattern. As the segments are increased, security may be enhanced further.

FIG. **28** is a flowchart illustrating a method of controlling an operation of a portable terminal according to an embodiment.

As shown in FIG. **28**, it is assumed that the portable terminal **100** operates in linkage with an ear accessory such as the headset **51** or the headphone **300**, and the ear accessory includes an ear speaker, an ear contact ECG electrode, and a hand contact ECG electrode. The ear accessory may be connected to the portable terminal **100** wire/wirelessly.

First, the control unit **180** detects that a user wears an ear accessory through an ear contact ECG electrode in operation S**10**. At this point, while audio is outputted through the speaker of the portable terminal **100**, the control unit **180** stops the audio output through the speaker and outputs audio through the ear speaker of the ear accessory.

When a user executes a music application, i.e. an MP3 function, after wearing the ear accessory in operation S**11**, the control unit **180** outputs an audio signal outputted from an audio codec to the ear speaker of the ear accessory in operation S**12**. At this point, when the control unit **180** detects that a user removes the ear accessory through the ear contact ECG electrode of the ear accessory, it may pause audio playback, or may output audio through the speaker of the portable terminal **100** after stopping the audio output through the ear speaker of the ear accessory.

While audio is outputted through the ear accessory, a user selects a bio information related application, i.e. an ECG related application, from a menu, and executes it in operation S**13**. Then, the control unit **180** receives the ECG signal, detected through the ear contact ECG electrode of the ear accessory, by using the earphone jack **176** and the ECG sensor, and displays information, obtained from the ECG signal, and the ECG signal on the display unit **151** in operation S**14**. Accordingly, according to an embodiment, listening

to music and ECG measurement may be performed simultaneously by using the ear accessory.

Then, when detect signals Hand_R and Hand_L are received through the earphone jack **176** in operation S**15** after the user's hand contacts the hand contact ECG electrode at the outside of the ear accessory, the control unit **180** determines a hand contact type through the contact sensing unit and controls audio playback (for example, Play, Forward, Reverse, Pause, and others) according to hand contact information in operation S**16**. Especially, the control unit **180** controls audio playback according to Table 1.

Moreover, when an audio function is not executed with the ear accessory put on and the ECG related application is executed in operations S**10** and S**13**, the control unit **180** receives the ECG signal, detected from the ear contact ECG electrode of the ear accessory, through the earphone jack **176** and the ECG sensor, and displays information obtained from the ECG signal or the ECG signal on the display unit **151** in operation S**14**. Accordingly, in this case, only an ECG measurement function is performed by using the ear accessory.

Then, a usage case of a mode changing method of a portable terminal according to an embodiment will be described with reference to FIGS. **29** to **38**.

FIG. **29** is a view illustrating a process for releasing a lock state according to an embodiment.

First, the portable terminal **100** checks a DC level increase of an ECG signal in a sleep mode during a first mode M**1**. When the body does not contact the electrode, the portable terminal **100** only need to check a DC level increase of an ECG signal without checking whether there is an ECG waveform, so the power consumption of the portable terminal **100** may be reduced in the sleep mode.

When a user's finger contacts one of the plurality of ECG electrodes **171**, the portable terminal **100** changes into the second mode M**2** in order to check whether there is the ECG waveform in the sleep mode.

When a user grips the portable terminal **100** in the second mode M**2** in which whether there is the ECG waveform is checked, the portable terminal **100** changes into the third mode M**3** and wakes up from the sleep mode in order to display a lock state screen. When a predetermined time elapses after a user puts the portable terminal **100** down in the second mode M**2**, the portable terminal **100** changes into the first mode M**1** in order to check a DC level increase of an ECG signal in a sleep mode.

When a user grips the portable terminal **100** in the third mode M**3** in which the lock state screen is displayed, the portable terminal **100** changes into the fourth mode M**4** in order to perform user authentication through an ECG signal. When a predetermined time elapses after a user puts the portable terminal **100** down in the third mode M**3**, the portable terminal **100** changes into the first mode M**1** in order to check a DC level increase of an ECG signal in a sleep mode. When a predetermined time elapses after a user does not squeeze the portable terminal **100** and thus the finger contacts one of the plurality of ECG electrodes **171**, the portable terminal **100** changes into the second mode M**2** in order to check whether there is an ECG waveform in a sleep mode.

If the user authentication is successful in the fourth mode M**4**, the portable terminal **100** changes into the fifth mode M**5** in order to release the lock state. When a predetermined time elapses after a user puts the portable terminal **100** down in the fourth mode M**4**, the portable terminal **100** changes into the first mode M**1**. When a predetermined time elapses after a user does not squeeze the portable terminal **100** and thus the finger contacts one of the plurality of ECG electrodes **171**, the portable terminal **100** changes into the second mode M**2**.

When a predetermined time elapses after a user puts the portable terminal **100** down in the fifth mode M**5** in which the lock state is released, the portable terminal **100** changes into the first mode M**1**. When a predetermined time elapses after a user does not squeeze the portable terminal **100** and thus the finger contacts one of the plurality of ECG electrodes **171** in the fifth mode M**5**, the portable terminal **100** changes into the second mode M**2**.

FIG. **30** is a flowchart illustrating a process for releasing a lock state according to another embodiment. Especially, FIG. **30** shows an example for releasing a screen lock by measuring a user's heartbeat.

As shown in FIG. **30**, the control unit **180** measures the heartbeat of a user and stores it in the memory **160** in operation S**10**. Then, when the user wears an ear accessory, the control unit **180** confirms the current heartbeat of the user through an ECG signal detected from the ear contact ECG electrode of the ear accessory in operation S**32**.

Then, the control unit **180** compares the confirmed current heartbeat with a pre-stored reference heartbeat in operation S**33**, and if they are identical, the screen lock is released in operation S**37**. However, if the two heartbeats are not identical, the screen lock state is maintained in operation S**34**, and a password input window for inputting a password is displayed on the display unit **151** in operation S**35**. Then, if a password inputted in the password input window is identical to a pre-stored password, the control unit **180** releases the screen lock in operation S**37**. If they are identical, the screen lock state is maintained in operation S**34**.

As mentioned above, according to an embodiment, with an ECG sensor equipped in a wire/wireless headset or an ECG sensor, a user may measure ECG naturally while listening to music. By contacting one side of the headset by the hand, audio playback may be controlled or operation controls (for example, call reception and lock control) of various portable terminals may be performed.

FIG. **31** is a view illustrating a process for making a call according to an embodiment.

First, the portable terminal **100** plays bell sound, or generates vibration by receiving a call in a sleep mode during a first mode M**1**.

When a user's finger contacts one of the plurality of ECG electrodes **171** in the first mode M**1**, the portable terminal **100** changes into the second mode M**2** in order to wake up and executes a phone call program.

When a user grips the portable terminal **100** in the second mode M**2**, the portable terminal **100** changes into the third mode M**3** in order to reduce the volume of the bell sound, stop the bell sound playback, or stop the vibration.

When a user grips the portable terminal **100** in the third mode M**3**, the portable terminal **100** changes into the fourth mode M**4** in order to perform user authentication through an ECG signal.

If the user authentication is successful, the portable terminal **100** changes into the fifth mode M**5** in order to start a phone call.

FIG. **32** is a flowchart illustrating a method of controlling an operation of a portable terminal according to an embodiment.

The control unit **180** recognizes whether the portable terminal **100** enters a call mode in operation S**1010**.

While the portable terminal **100** enters the call mode, in case that an object adjacent to a specific region of the body of the portable terminal **100** is detected in operation S**1020**, the control unit **180** obtains ECG data through the ECG electrode **171** in operation S**1030**.

In operation S**1020**, an object adjacent to the specific region of the body of the portable terminal **100** may be detected by the proximity sensor **141**. Moreover, the specific region where the adjacent object is detected is a region having the sound outputting module **152** that operates as a speaker for outputting a call sound during a call mode. That is, an object adjacent to the sound outputting module **152** may be detected in operation S**1020** through the proximity sensor **141** adjacent to the sound outputting module **152**.

Moreover, in operation S**1020**, when detecting an object adjacent to the specific region of the body of the portable terminal **100** through the proximity sensor **141**, the control unit **180** transmits a control signal to the switch **310** in order to connect the ECG sensor **142***c* with the ECG electrode **171** at the body of the portable terminal **100**. Especially, the control unit **180** transmits a control signal to the switch **310** in order to connect the ECG sensor **142***c* adjacent to the sound outputting module **152** with the ECG electrode **171** at the body of the portable terminal **100**.

Moreover, as shown in FIG. **32**, only when the portable terminal **100** enters the call mode and an object adjacent to a specific region of the body of the portable terminal **100** is detected, ECG data are obtained from the control unit **180**. However, the present invention is not limited thereto.

According to the present invention, when a user uses an ear accessory such as the headset **50** or the earphone **300**, i.e. an ear accessory is attached to the portable terminal **100**, the control unit **180** may obtain ECG data even if an object adjacent to a specific area of the body of the portable terminal **100** is not detected. In this case, when entering a call mode, the control unit **180** transmits a control signal to the switch **310** in order to connect the ECG sensor **142***c* with the ECG electrode **171** at the body of the portable terminal **100**. Then, when the ear accessory has an ECG electrode, the control unit **180** transmits a control signal to the switch **310** in order to the ECG sensor **142***c* with the ECG electrode of the ear accessory.

FIG. **33** is a flowchart illustrating a method of determining whether to end a call of a portable terminal according to another embodiment.

Referring to FIG. **33**, when the portable terminal **180** enters a call mode in operation S**2010**, the control unit **180** analyzes ECG data obtained from the ECG sensor **142***c*, and obtains an emotional state or excitement of a user in operation S**2020**. At this point, the control unit **180** obtains feature parameters, which are criteria for determining an emotional state or excitement of a user, from ECG data through the analysis of the ECG data, in order to obtain the emotional state or excitement of a user from the feature parameters. The feature parameters may be a peak value of an ECG signal and a heart rate or a cardiac cycle, which is obtained by using the peak value of the ECG signal.

If the user's excitement obtained in operation S**2020** is greater than the predetermined level in operation S**2030**, the control unit **180** outputs an alarm that notifies the user's excitement state in operation S**2040**. Additionally, the control unit **180** may end a call with the other party in order for the stability of a user in operation S**2060**.

An alarm that notifying a user's excitement state may be outputted in various forms.

For example, if the user's excitement is greater than the predetermined level, the control unit **180** may transmit a guide sound that notifies the user's excitement to the other side.

Additionally, for example, if the user's excitement is greater than the predetermined level, the control unit **180** may output a guide sound or a vibration sound that notifies the user's excitement to a user, or may display a warning message on the display module **151**.

Furthermore, when the user's excitement is greater than the predetermined level, a call is terminated compulsorily as shown in FIG. **33**, but the present invention is not limited thereto.

According to the present invention, if the user's excitement is greater than the predetermined level, the control unit **180** may output an alarm that notifies a user's state and may not terminate the call.

Moreover, according to the present invention, if the user's excitement is greater than the predetermined level, the control unit **180** may store a call history to the other side in the memory **160**.

Again, referring to FIG. **33**, if call termination is requested from a user in operation S**2050**, or a call mode is terminated when the user's excitement is greater than the predetermined level, the control unit **180** a user's emotions state or excitement in the memory **160** in operation S**2070**.

For example, the control unit **180** may include a user's emotional state or excitement obtained by a call mode in the call history, and then, may store it.

Furthermore, for example, the control unit **180** may match the user's emotional state or excitement obtained in a call mode to the contact information of the other side, and then, may store it.

FIG. **34** is a view when a user's emotional state is matched to the contact information of the other side call and is stored in a phone book.

Referring to FIG. **34**, as a call with the other side A is terminated, the control unit **180** matches to the contact information of the other side A an emotional state (for example, feels good) that a user feels about the other side A during a call and stores it in a phone book.

Then, when the control unit **180** reads the contact information of the other side A from the phone book and displays it on a screen, the stored emotional state **9***a* of the user is additionally read and displayed on the same screen. The user's emotional state may be represented with various forms such as emoticon and text. FIG. **34** is a view when a user's emotional state is represented with an emoticon form.

Additionally, if information on a user's emotional state or excitement for the other side is already stored, the control unit **180** may update the user's emotional state or excitement by using the currently-obtained emotional state or excitement.

Moreover, the control unit **180** may continuously store a user's emotional state or excitement obtained during a call mode.

FIG. **35** is a view illustrating a method of managing a user's health state by using ECG data in a portable terminal **100** according to an embodiment.

Referring to FIG. **35**, the control unit **180** obtains the user's health state on the basis of the user's ECG data obtained through the ECG sensor **142***c* in operation S**3010**.

The control unit **180** obtains feature parameters such as a peak value, a heart rate, and a cardiac cycle, which are criteria for determining a user's health state, from the ECG data through an analysis of ECG data. Moreover, the control unit **180** obtains a user's health state on the basis of the feature parameters.

Additionally, the control unit **180** stores the obtained ECG data and health state in the memory **160**. The user's ECG data and health state may be stored in addition to the time and position at which they are obtained.

The control unit **180** confirms the user's health state on the basis of the obtained health state, and if it is determined that the user's health state is poor in operation S**3020**, generates an alarm in operation S**3030**.

For example, the control unit **180** outputs guide sound or vibration sound, which notifies the health state abnormality to the user, or displays a message, which notifies the health state abnormality through the display module **151**.

Moreover, for example, the control unit **180** transmits a message notifying a user's health state abnormality or user's health state information by using a predetermined phone number.

Again, referring to FIG. **35**, even if it is determined that the user's health state is normal, when it comes to a predetermined period in operation S**3040**, the control unit **180** transmits the user's health state including the obtained ECG data, heart rate, and cardiac period to the predetermined other side by using the phone number and e-mail address of the predetermined other side in operation S**3050**.

In operation S**3020**, the control unit **180** compares the previously-obtained ECG data heart rate, and cardiac period with the currently-obtained ECG data heart rate, and cardiac period, and if there is a great change, determines that the user's health abnormality occurs.

Moreover, in operation S**3020**, the control unit **180** compares the obtained ECG data heart rate, and cardiac period with the predetermined level, and if they are out of the predetermined range, determines that the user's health abnormality occurs.

According to an embodiment, the user's ECG data obtained through the ECG sensor **142***c* may be used in various fields in addition to the above-mentioned call mode control and health state management.

For example, the control unit **180** obtains the user's emotional state from the ECG data obtained through the ECG sensor **142***c*, and then, stores them combined with the current position of the portable terminal **100**. The health state combined with the position information and stored may be used for criteria for searching specific position information such as famous restaurants and providing it to a user. For example, restaurants having a negative rating of a user's emotional state may be excluded from a famous restaurant list that recommended to a user. Furthermore, for example, restaurants having a positive rating of a user's emotional state may be recommended first to a user.

Furthermore, for example, the control unit **180** obtains the user's emotional state from the ECG data through the ECG sensor **142***c*, and then, selectively provides only specific position information matching the user's emotional state to a user.

Furthermore, for example, the control unit **180** obtains the user's emotional state from the ECG data or stress index through the ECG sensor **142***c*, and then, recommends specific content to a user on the basis of them. When a user shows a negative emotional state or a high stress index, the control unit **18** may recommend or provide specific kinds of contents that help user's stability or refresh to the user. Here, the contents provided for user's stability or refresh may be set by a user.

Moreover, according to the above embodiment, a case that a user's ECG signal is measured when the portable terminal **100** operates in a call mode was described but the present invention is not limited thereto. According to the present invention, the control unit **180** may be applicable to measuring a user's ECG signal when a user requests ECG signal measurement through the user input unit **130**.

According to the above-mentioned embodiment, a portable terminal may measure user's ECG signal without additional electronic device or equipment. Furthermore, a portable terminal, which performs various functions in addition to an ECG signal measurement function, activates ECG signal measurement only in a designated mode, so that power consumption for ECG signal measurement may be minimized. Furthermore, when the portable terminal does not operate in a call mode, electrodes are electrically separated from a signal processing unit. Therefore, noise from an external, which flows through electrodes, may be minimized and an internal circuit may be protected.

FIG. **36** is a flowchart illustrating a method of controlling an operation of a portable terminal according to another embodiment. The embodiment of FIG. **36** relates to a process of call reception instead of an MP3 function, and its basic operation is similar to that of the embodiment of FIG. **28**.

That is, when a call is received with the headset being worn by a user, the control unit **180** automatically connects a phone call in operation S**20** to S**22** While a user selects a bio information measurement application, i.e. an ECG measurement application, from a menu, and executes it in operation S**23**, the control unit **180** receives the ECG signal, detected from the ear contact electrode of the ear accessory, through the earphone jack **176** and the ECG sensor, and displays information, obtained from the ECG signal, and the ECG signal on the display unit **151** in operations S**23** to S**26**. Accordingly, the present invention may measure ECG during a phone call by using the headset.

Then, when detect signals Hand_R and Hand_L are received through the earphone jack **176** in operations S**27** and **28** after the user's hand contacts the hand contact electrode **50***b* of the ear accessory, the control unit **180** determines a hand contact type through the contact sensing unit and controls the phone call connection (for example, call connection and call waiting) according to hand contact information in operation S**29**.

FIG. **37** is a view illustrating a process for confirming message content according to an embodiment.

First, the portable terminal **100** plays bell sound, or generates vibration by receiving a message in a sleep mode during a first mode M**1**.

When a user's finger contacts one of the plurality of ECG electrodes **171** in the first mode M**1**, the portable terminal **100** changes into the second mode M**2** in order to check an ECG waveform in the sleep mode.

When a user grips the portable terminal **100** in the second mode M**2**, the portable terminal **100** changes into the third mode M**3** in order to display a message reception alarm.

When a user squeezes the portable terminal **100** in the third mode M**3**, the portable terminal **100** changes into the fourth mode M**4** in order to perform user authentication through an ECG signal.

If the user authentication is successful, the portable terminal **100** changes into the fifth mode M**5** in order to display the received message.

FIG. **38** is a ladder diagram illustrating a method of evaluating an evaluation target through an emotion sensed from an ECG signal according to an embodiment.

The evaluation target may correspond to figures, pictures, comments, and news articles.

FIG. **38** is described based on an ECG signal, but another body signal may be used.

First, the evaluation server **600** transmits an evaluation request message to the portable terminal **100**.

The control unit **180** senses a DC level increase of an ECG signal in operation S**402**. According to an embodiment, the control unit **180** may sense an ECG waveform.

When the DC level of an ECG signal is sensed, the control unit **180** of the portable terminal **100** displays an evaluation request alarm in operation S**403**.

After the evaluation request alarm is displayed, the control unit **180** senses an ECG waveform in operation S**405**. Operation S**405** may be omitted.

The control unit **180** receives an evaluation target request user input in operation S**409**. The evaluation target request user input may correspond to an EMG waveform.

When the evaluation target request user input is displayed, the control unit **180** detects an ECG waveform in operation S**409**.

In operation S**411**, the control unit **180** detects an emotion before evaluation from the ECG signal detected in operation S**409**.

The control unit **180** confirms whether a pattern of the ECG signal detected in operation S**409** is identical to that registered by a user of the portable terminal **100**, and then, performs user authentication in operation S**413**.

If the user authentication is successful, the control unit **180** transmits an evaluation target request message to the evaluation server **600** through a communication module in operation S**415**.

According to an embodiment, when operations S**401** to S**407** and operation S**413** are omitted, the control unit **180** detects a touch of an evaluation target link in order to transmit an evaluation target request message.

The evaluation server **600** transmits an evaluation target in response to the evaluation target request message in operation S**417**.

The control unit **180** detects a DC level increase of an ECG signal in operation S**418**. According to an embodiment, the control unit **180** may detect an ECG waveform.

When a DC level of an ECG signal is sensed, the control unit **180** displays the received evaluation target in operation S**419**.

After the evaluation target is displayed, the control unit **180** detects an ECG waveform in operation S**421**. Operation S**421** may be omitted.

The control unit **180** receives an automatic evaluation user input in operation S**423**. The automatic evaluation user input may correspond to an EMG waveform.

The control unit **180** detects an ECG signal in operation S**425**.

In operation S**427**, the control unit **180** detects an emotion after evaluation from the ECG signal detected in operation S**425**.

For example, the control unit **180** may determine a user's emotion according to Table 3.

TABLE 3

	Beats per minute
Very excited	120 over
Excited	90-120
Stable	50-90
Depressed	50 below

The control unit **180** compares the emotion before evaluation with the emotion after evaluation and determines an evaluation result in operation S**429**. For example, the control unit **180** determines excitement or stability through a change in a pulse frequency and on the basis of this, determines an evaluation result. If an interesting video is an evaluation target, whether the video is funny is determined on the basis of an increased heart rate, compared to a heart rate before watching the video.

The control unit **180** confirms whether a pattern of the ECG signal detected in operation S**425** is identical to that registered by a user of the portable terminal **100**, and then, performs user authentication in operation S**431**.

If the user authentication is successful, the control unit **180** transmits an evaluation result to the evaluation server **600** through a communication module in operation S**433**.

According to an embodiment, operation S**401** and operation S**402** correspond to the first mode M**1**; operation S**403** and operation S**405** correspond to the second mode M**2**; operation S**407** corresponds to the third mode M**3**; operation S**409**, operation S**411**, and operation S**413** correspond to the fourth mode M**1**; and operation S**415** corresponds to the fifth mode M**5**. Additionally, operation S**417** and operation S**418** correspond to the first mode M**1**; operation S**419** and operation S**421** correspond to the second mode M**2**; operation S**423** corresponds to the third mode M**3**; operation S**427**, operation S**429**, and operation S**431** correspond to the fourth mode M**1**; and operation S**433** corresponds to the fifth mode M**5**.

Relations of operations and modes of FIG. **38** may be changed. For example, operation S**401** and operation S**402** may correspond to the second mode M**2**; operation S**403**, operation S**405**, and operation S**407** may correspond to the third mode M**3**; operation S**409**, operation S**411**, and operation S**413** may correspond to the fourth mode M**4**; and operation S**415** may correspond to the fifth mode M**5**. Additionally, operation S**417** and operation S**418** may correspond to the second mode M**2**; operation S**419**, operation S**421**, and operation S**423** may correspond to the third mode M**3**; operation S**425**, operation S**427**, and operation S**429** may correspond to the fourth mode M**4**; and operation S**433** may correspond to the fifth mode M**5**.

A data transmitting method of a portable terminal according to an embodiment will be described with reference to FIGS. **39** to **45**.

FIG. **39** is a flowchart illustrating a data transmitting method of a portable terminal according to an embodiment.

As shown in FIG. **39**, a portable terminal **100** may communicate with a first device **400** and a second device **500**. However, let's assume that the portable terminal communicates with the first device **400**.

First, the control unit **180** detects event occurrence in operation S**101**, and waits to receive an ECG signal. Here, an event may correspond to call reception, program execution, file selection for transmission, device selection for connection, and communication method selection. Here, a program may correspond to a contact related program, a name card related program, a document transmission related program, a music playback program, and a video playback program. A file for transmission may correspond to contacts, name cards, documents, music files and video files.

The control unit **180** receives a communication request user input in operation S**103**. Here, the communication request user input may correspond to an EMG waveform.

Then, the control unit **180** detects en ECG signal through the ECG sensor **142***c*.

The control unit **180** recognizes an ECG pattern from the ECG signal, and confirms whether an ECG pattern of a user stored in the memory **160** is identical to the recognized ECG pattern in order to perform ECG authentication in operation S**107**.

If the user's ECG pattern is not stored in the memory **160** or they are not identical, the control unit **180** displays a password input window on the display unit **151** in operation S**111**.

The control unit **180** receives a password in operation S**113**, and confirms whether the received password is identi-

cal to a password stored in the memory **160** in order to perform password authentication in operation S**115**. If the password authentication is failed, the control unit **180** terminates data transmission.

Moreover, if the password authentication is successful, the control unit **180** stores the recognized ECG pattern in the memory **160** in order to perform ECG pattern update in operation S**117**. The ECG pattern update will be described with reference to FIG. **40**.

FIG. **40** is a view illustrating a process for ECG pattern update according to an embodiment.

As shown in FIG. **40**, a user performs ECG authentication through two electrodes attached to the left and right of the portable terminal **100** in operation S**107**. However, if the ECG authentication is failed, a password input window is displayed on the display unit **151**. The user inputs a password by touching the display unit **151** in operation S**111**. If the password authentication is successful, the control unit **180** recognizes an ECG pattern in order to perform ECG pattern update in operation S**117**.

When the ECG authentication is successful or the password authentication is successful, the control unit **180** of the portable terminal **100** transmits a connection device confirmation message to devices around in operation S**121**. According to an embodiment, the control unit **180** of the portable terminal **100** outputs a connection device confirmation message to devices around through the body communication module **116**. According to an embodiment, the control unit **180** transmits a connection device confirmation message through another communication module such as a WLAN communication modem, a Wibro communication modem, an HSDPA communication modem, a Bluetooth communication module, and an infrared communication modem. At this point, if there are more than two devices around, the connection device confirmation message may be transmitted to all the devices **400** around.

Additionally, while a device receiving the connection device confirmation message transmits a response message, if the first device **400** and the second device **500** transmit the response message, conflict may occur. Accordingly, the first device **400** determines delay time through a random function in operation S**123**, and transmits a response message to the portable terminal **100** after a predetermined delay time elapses in operation S**125**. Also, the second device **500** determines delay time through a random function in operation S**127**, and transmits a response message to the portable terminal **100** after a predetermined delay time elapses in operation S**129**.

The devices around may transmit a response message through a communication module such as the body communication module **116**, a WLAN communication modem, a Wibro communication modem, an HSDPA communication modem, a Bluetooth communication module, and an infrared communication modem. The devices around may transmit a response message by using the same communication method as the one through which the connection device confirmation message is transmitted, or by using a different communication method from the one through which the connection device confirmation message is transmitted.

The response message may include a device identifier, a device type, owner information, communication capability information, and connection setting information. The device type may be information on whether a device is the headset, a mobile phone, a TV, or a computer. The communication capability information may correspond to information on which one of a plurality of communication methods such as WLAN communication, Wibro communication, HSDPA communication, Bluetooth communication, and infrared communication is supported by a device. The connection setting information may correspond to information necessary for connecting to a supported communication method. According to an embodiment, a device identifier, a device type, owner information, communication capability information, and connection setting information may be transmitted through an additional message separated from a response message.

The control unit **180** of the portable terminal **100** receiving the response message displays a graphical user interface (GUI) supporting various selections on the display unit **151**, and receives a user input if necessary in operation S**131**. The GUI according to various embodiments will be described with reference to FIGS. **41** to **45**.

FIG. **41** is view illustrating GUI for selecting a device to be connected according to an embodiment.

As shown in FIG. **41**, the control unit **180** displays a searched device list on the display unit **151**, and provides selection for device connection to a user. Each item of the displayed list may include at least one of a device identifier, a device type, owner information, communication capability information, and connection setting information.

According to an embodiment, if the number of the searched devices is one, the control unit **180** may not display the searched device list. According to an embodiment, the control unit **180** may select a device for connection without user's selection on the basis of types of events and files to be transmitted instead of not displaying the searched device list. When control unit **180** detects event occurrence and a connection device is selected, displaying the GUI for selecting a device to be connected may not be omitted.

FIG. **42** is view illustrating GUI for selecting a device to be connected according to an embodiment.

As shown in FIG. **42**, the control unit **180** displays on the display unit **151***a* list of a common connection type among a connection type that the selected device supports and a connection type that the portable terminal **100** supports, and provides selection for connection type to a user. Especially, the control unit **180** determines required quality of service (QoS) on the basis of types of events and files to be transmitted, and displays on the display unit **151***a* list of a connection type that satisfies QoS, which is determined from the common connection type. When control unit **180** detects event occurrence and a connection type is selected, displaying the GUI to select a connection type may be omitted.

FIG. **43** is view illustrating GUI for file selection according to an embodiment.

As shown in FIG. **43**, the control unit **180** displays an icon of at least one file on the display unit **151**, and provides selection for a file to be transmitted to a user. When control unit **180** detects event occurrence and a file to be transmitted is selected, displaying the GUI for file selection may be omitted.

FIG. **44** is view illustrating GUI for file selection according to another embodiment.

As shown in FIG. **44**, the control unit **180** displays the GUI including a first region that displays a transmission available file list that the portable terminal **100** has and a second region that displays a transmission available file list that a connected device has. When a file in the first region is dragged on the second region, the control unit **180** may transmits the dragged file to a device through a selected connection type. When a file in the second region is dragged on the first region, the control unit **180** may receive the dragged file from the connected device through a selected connection type.

FIG. **45** is view illustrating GUI according to an embodiment.

The GUI shown in FIG. **45** includes a plurality of regions, which correspond to a plurality of searched devices, respectively. Each region includes GUI for controlling a corresponding device. That is, GUI for connection type selection, GUI for transmission file selection, and GUI for volume adjustment may be provided to each region.

FIG. **39** is described again.

The control unit **180** determines required QoS on the basis of types of events and files to be transmitted, and selects a connection type that satisfies QoS in operation S**133** in order to provide user convenience.

The control unit **180** provides a communication preparation command message to the first device **400**, i.e. the selected device, in operation S**135**. The control unit **180** may output the communication preparation command message to the two ECG electrodes **171** through the body communication module **116**. When a connection type is selected, the control unit **180** may provide the communication preparation command message to the selected device through a communication module for the selected connection type.

Once the communication preparation command message is received, the first device **400** prepares communication in operation S**137**. The communication preparation command message may include information on the selected connection type. In this case, the first device **400** may turn on a communication module for the selected connection type.

Then, the control unit **180** of the portable terminal **100** performs communication with the selected device, i.e. the first device **400**, through the communication module for the selected communication method in operation S**139**.

According to an embodiment, operation S**101** may correspond to the second mode M**2**; operation S**103** may correspond to the third mode M**3**; operations S**105** to operation S**117** may correspond to the fourth mode M**4**; and operations S**121** to S**139** may correspond to the fifth mode M**5**.

According to another embodiment, operation S**101** may correspond to the second mode M**2**; operation S**103** may correspond to the third mode M**3**; operations S**105** to operation S**117** may correspond to the fourth mode M**4**; operations S**121** to S**129** may correspond to the second mode M**2**; operations S**131** and S**133** may correspond to the third mode M**3**; and operations S**135** to S**139** may correspond to the fifth mode M**5**. At this point, in the third mode M**3**, the control unit **180** provides recommendation on a communication target, a communication method, and transmission files, and changes into the next mode after detecting an EMG waveform. Moreover, the forth mode M**4** may be added between operation S**133** and operation S**135**.

Then, usage cases according to an embodiment will be described with reference to FIGS. **46** to **52**.

FIG. **46** is a view illustrating a process for transmitting a contact number to the other side's mobile phone according to an embodiment.

As shown in FIG. **46**, once a contact number related program is executed, it waits for ECG authentication. When the user's hand contacts the two ECG electrodes **171**, the contact number related program or an ECG authentication program related thereto performs ECG authentication. Then, when the user shakes hands with the other side, the contact number related program confirms the other side's mobile phone by using the two ECG electrodes **171** through a body communication method. Once the other side's mobile phone is confirmed, the contact number related program exchanges a contact number with the other side's mobile phone by using the two ECG electrodes **171** through a body communication method.

FIG. **47** is a view illustrating a process for listening to music according to an embodiment.

As shown in FIG. **47**, once a music playback program is executed, it waits for ECG authentication. When the user's hand contacts the two ECG electrodes **171**, the music playback program or an ECG authentication program related thereto performs ECG authentication. Then, the music playback program confirms the headset by using the two ECG electrodes **171** through a body communication method. Once the headset is confirmed, the music playback program transmits music to the headset by using the two ECG electrodes **171** through a body communication method.

FIG. **48** is view illustrating a process for phone call according to an embodiment.

As shown in FIG. **48**, when a mobile phone receives a call, a phone call program notifies a call reception to a user through bell sound or vibration, and waits for ECG authentication. When the user's hand contacts the two ECG electrodes **171**, the phone call program or an ECG authentication program related thereto performs ECG authentication. Then, the phone call program confirms the headset by using the two ECG electrodes **171** through a body communication method. Once the headset is confirmed, the phone call program transmits the other side's voice to the headset by using the two ECG electrodes **171** through a body communication method, and receives a user's voice from the headset.

FIG. **49** is a view illustrating a process for transmitting a security file to the other side's mobile phone according to an embodiment.

As shown in FIG. **49**, once a file transmission program is executed, it waits for ECG authentication. When the user's hand contacts the two ECG electrodes **171**, the file transmission program or an ECG authentication program related thereto performs ECG authentication. Then, when the user shakes hands with the other side, the file transmission program confirms the other side's mobile phone by using the two ECG electrodes **171** through a body communication method. Once the other side's mobile phone is confirmed, the file transmission program determines a communication method on the basis of the size of the security file. If the size of the security file is too large and thus a body communication method cannot be used, the file transmission program transmits the security file to the other side's mobile phone through a short range communication method.

FIG. **50** is a view illustrating a process for listening to music according to an embodiment.

As shown in FIG. **50**, once a music playback program is executed, it waits for ECG authentication. When the user's hand contacts the two ECG electrodes **171**, the music playback program or an ECG authentication program related thereto performs ECG authentication. Then, the music playback program confirms the headset by using the two ECG electrodes **171** through a body communication method. According to an embodiment, the music playback program may confirm the headset through a Bluetooth communication method. If a user wants to listen to high-quality music or wants to put down the mobile phone, the music playback program transmits music to the headset through a short range communication method such as a Bluetooth communication method.

FIG. **51** is view illustrating a process for phone call according to an embodiment.

As shown in FIG. **51**, when a mobile phone receives a call, a phone call program notifies a call reception to a user through

bell sound or vibration, and waits for ECG authentication. When the user's hand contacts the two ECG electrodes **171**, the phone call program or an ECG authentication program related thereto performs ECG authentication. Then, the phone call program confirms the headset by using the two ECG electrodes **171** through a body communication method. According to an embodiment, the music playback program may confirm the headset through a Bluetooth communication method. If a user wants to put down the mobile phone, the music playback program transmits the other side' voice to the headset through a short range communication method such as a Bluetooth communication method, and receives a user's voice from the headset.

FIG. **52** is a view illustrating a process for watching a video according to an embodiment.

As shown in FIG. **52**, once a video playback program is executed, it waits for ECG authentication. When the user's hand contacts the two ECG electrodes **171**, the video playback program or an ECG authentication program related thereto performs ECG authentication. Then, the video playback program confirms a TV or a monitor by using the two ECG electrodes **171** through a body communication method. According to an embodiment, the video playback program may confirm a TV through a wireless LAN method, wireless High-Definition Multimedia Interface (HDMI), and a Bluetooth communication method. Since video transmission requires a large bandwidth, the video playback program transmits a video to a TV through a communication method having a large bandwidth such as wireless HDMI.

According to various embodiments of the present invention, a user can control various functions of a terminal through a signal obtained from a body without an external input device such as a keyboard or a mouse.

Even if a user intentionally does not try to measure an electrocardiogram (ECG) signal, a mobile/portable terminal according to embodiments of the present invention can measure an ECG signal automatically during a call or listening to music. Moreover, power consumed for measuring an ECG signal may be reduced in a mobile/portable terminal.

The above method can also be embodied as computer readable codes on a computer readable recording medium. Examples of the computer readable recording medium include read-only memory (ROM), random-access memory (RAM), CD-ROMs, magnetic tapes, floppy disks, and optical data storage devices. The method can also be embodied as carrier waves (such as data transmission through the Internet).

Although embodiments have been described with reference to a number of illustrative embodiments thereof, it should be understood that numerous other modifications and embodiments can be devised by those skilled in the art that will fall within the spirit and scope of the principles of this disclosure. More particularly, various variations and modifications are possible in the component parts and/or arrangements of the subject combination arrangement within the scope of the disclosure, the drawings and the appended claims. In addition to variations and modifications in the component parts and/or arrangements, alternative uses will also be apparent to those skilled in the art.

What is claimed is:

1. A user terminal device comprising:

an electrocardiogram (ECG) electrode,

an external accessory of the user terminal device including:

at least one electrode contacted with a user,

at least one body sensor electrically connected to the at least one electrode, the at least one body sensor configured to generate an electromyogram (EMG) signal by physically contacting the user with the at least one electrode and the EMG signal being different from an ECG signal, wherein the at least one body sensor includes an ECG sensor for generating an ECG signal from the ECG electrode,

a first wireless communication module configured to wirelessly transmit the EMG signal, and

a body communication module configured to demodulate a signal generated from the ECG electrode to generate demodulated data, and provide a signal modulated by modulating transmission data to the ECG electrode;

a second wireless communication module configured to wirelessly receive the EMG signal;

a switch configured to connect the ECG electrode to the ECO sensor in response to a first control signal and connect the ECG electrode to the body communication module in response to a second control signal;

a display unit;

a memory configured to;

store an application program that processes at least one body signal detected by the at least one body sensor, and

store an ECG pattern of a user;

a short range communication module; and

a control unit configured to:

execute the application program,

when a pattern of the ECG signal is identical to the ECG pattern of the user, provide the second control signal to the switch to communicate with another user terminal device through the body communication module,

when an EMG pattern occurs in the ECG signal, start communication with the other user terminal device, and

perform communication to confirm the other user terminal device through the body communication module and perform short range communication through the short range communication module,

wherein the user terminal device and the external accessory are used by the same user, and

wherein the control unit executes the application program to perform a mode change of the application program from a first mode to a second mode based on the EMG signal to control functions of the user terminal device without moving a cursor.

2. The user terminal device according to claim **1**, further comprising:

a light emitting diode; and

a light receiving diode configured to receive the light emitted from the light emitting diode,

wherein the at least one body sensor comprises a blood movement measuring sensor configured to generate a blood movement measurement signal from the current that the light receiving diode provides.

3. The user terminal device according to claim **2**, wherein the light emitting diode, the light receiving diode, and the blood movement measuring sensor are connected to an earphone jack and

the user terminal device further comprises:

the earphone jack including two speaker ports and a mike port;

an audio sub system including two audio signal output terminals connected to the two speaker ports, respectively, and a mike signal input terminal; and

a switch having one end connected to the mike port and the other end connected to the mike signal input terminal,

wherein the control unit turns off the switch when recognizing that the blood movement pulse measuring sensor is inserted through a voltage level change of the mike port, and receives a signal of the blood movement measuring sensor through the mike port; and

when recognizing that the blood movement measuring sensor is inserted, the control unit controls the audio sub system in order to allow the audio sub system to provide a voltage that the blood movement measuring sensor requires to the two speaker ports.

4. The user terminal device according to claim **2**, further comprising a fingerprint recognition electrode,

wherein the at least one body sensor further comprises a fingerprint sensor configured to generate fingerprint recognition information from a signal of the fingerprint recognition electrode; and

the light emitting diode and light receiving diode are disposed adjacent to the fingerprint recognition electrode to allow fingerprint measurement and blood movement measurement to be possible at the same time.

5. The user terminal device according to claim **2**, further comprising a function button, wherein the light emitting diode and the light receiving diode are disposed adjacent to the function button to allow a click of the function button and blood movement measurement to be possible at the same time.

6. The user terminal device according to claim **1**, further comprising:

a proximity sensor, wherein the ECG sensor starts to generate an ECG signal through the ECG electrode when the proximity of an object is detected through the proximity sensor during a phone call;

the control unit obtains an excitement of a user from the ECG signal;

the control unit ends a call or outputs an alarm when the excitement is more than a predetermined level;

the proximity sensor is disposed adjacent to the ECG electrode; and

the ECG electrode is disposed adjacent to a call speaker.

7. The user terminal device according to claim **1**, wherein the ECG electrode is disposed at an ear accessory; and

the control unit determines whether to output an audio signal to an ear speaker of the ear accessory on the basis of an ECG signal recognized through the ECG electrode.

8. The user terminal device according to claim **7**, further comprising a hand contact ECG electrode, wherein the hand contact ECG electrode is disposed at the ear accessory or the user terminal device; and the control unit performs an operation related to audio playback or call reception on the basis of an ECG signal recognized through the hand contact ECG electrode.

9. The user terminal device according to claim **1**, wherein the at least one body sensor further comprises a fingerprint recognition electrode; and a fingerprint sensor configured to generate fingerprint recognition information from a signal of the fingerprint electrode; and the fingerprint recognition electrode is disposed adjacent to the ECG electrode to allow fingerprint measurement and ECG measurement to be possible at the same time.

10. The user terminal device according to claim **1**, further comprising a function button, wherein the function button is disposed adjacent to the ECG electrode to allow a click of the function button and ECG measurement to be possible at the same time.

11. The user terminal device according to claim **1**, further comprising:

a light emitting diode; and

a light receiving diode configured to receive the light emitted from the light emitting diode,

wherein the at least one body sensor further comprises a blood movement measuring sensor configured to generate a blood movement measurement signal from the current that the light receiving diode, and the light emitting diode and the light receiving diode are disposed adjacent to the ECG electrode to allow ECG measurement and blood movement measurement to be possible at the same time.

12. The user terminal device according to claim **1**, further comprising a noise removing unit configured to remove noise detected from the ECG signal by detecting a typical noise source, wherein the typical noise source corresponds to at least one of a vibration detection signal, an electromagnetic detection signal, a sound source signal, and an AC power signal.

13. The user terminal device according to claim **1**, further comprising:

a first noise removing unit configured to remove a saturation interval, which is detected by amplifying the ECG signal, from the ECG signal; and

a second noise removing unit configured to remove noise detected from the ECG signal by detecting a typical noise source,

wherein the first noise removing unit and the second noise removing unit are connected in series.

14. The user terminal device according to claim **1**, wherein the application program performs user authentication when an ECG waveform detected from the ECG signal and the ECG pattern of the user are identical from comparison.

15. The user terminal device according to claim **1**, wherein

the first mode corresponds to a lock state,

the second mode corresponds to a lock release state, and

the control unit changes from the first mode into the second mode when an EMG waveform is detected from the ECG signal and an ECG waveform detected from the ECG signal and the ECG pattern of the user are identical after comparison.

16. The user terminal device according to claim **1**, wherein the first mode and the second mode correspond to a sleep state and a wake state from the sleep state, respectively;

the first mode and the second mode correspond to a call reception state and a phone call state, respectively;

the first mode and the second mode correspond to a message reception state and a message display state, respectively;

the first mode and the second mode correspond to an application standby state and an application execution state, respectively; or

the first mode and the second mode correspond to a content's one interval playback state and a content's next interval playback state, respectively.

* * * * *