US009143608B2

(12) **United States Patent**
Björsell et al.

(10) **Patent No.: US 9,143,608 B2**
(45) **Date of Patent: Sep. 22, 2015**

(54) **INTERCEPTING VOICE OVER IP COMMUNICATIONS AND OTHER DATA COMMUNICATIONS**

(71) Applicant: **Digifonica (International) Limited**, Vancouver (CA)

(72) Inventors: **Johan Emil Viktor Björsell**, Vancouver (CA); **Maksym Sobolyev**, New Westminster (CA)

(73) Assignee: **DIGIFONICA (INTERNATIONAL) LIMITED**, Vancouver (CA)

(*) Notice: Subject to any disclaimer, the term of this patent is extended or adjusted under 35 U.S.C. 154(b) by 0 days.

(21) Appl. No.: **13/863,306**

(22) Filed: **Apr. 15, 2013**

(65) **Prior Publication Data**

US 2013/0229950 A1 Sep. 5, 2013

Related U.S. Application Data

(63) Continuation of application No. 12/517,026, filed as application No. PCT/CA2007/002150 on Nov. 29, 2007, now Pat. No. 8,422,507.

(60) Provisional application No. 60/861,431, filed on Nov. 29, 2006.

(51) **Int. Cl.**
H04L 12/28 (2006.01)
H04M 3/22 (2006.01)
(Continued)

(52) **U.S. Cl.**
CPC ***H04M 3/2281*** (2013.01); ***H04L 63/00*** (2013.01); ***H04L 63/30*** (2013.01); ***H04M 7/0078*** (2013.01); *H04M 2203/15* (2013.01); *H04M 2203/2022* (2013.01)

(58) **Field of Classification Search**
None
See application file for complete search history.

(56) **References Cited**

U.S. PATENT DOCUMENTS

4,916,491 A 4/1990 Katoh
4,992,971 A 2/1991 Hayashi
(Continued)

FOREIGN PATENT DOCUMENTS

BR PI 0718312-7 A2 11/2013
BR PI 0719682-2 A2 1/2014
(Continued)

OTHER PUBLICATIONS

Extended European Search Report dated Nov. 2, 2012 for European Application No. EP 07 855 436.7.
(Continued)

Primary Examiner — Otis L Thompson, Jr.
(74) *Attorney, Agent, or Firm* — Knobbe Martens Olson & Bear LLP

(57) **ABSTRACT**

Methods and apparatus for intercepting communications in an Internet Protocol (IP) network involve maintaining dialing profiles for respective subscribers to the IP network, each dialing profile including a username associated with the corresponding subscriber, and associating intercept information with the dialing profile of a subscriber whose communications are to be monitored. Intercept information will include determination information for determining whether to intercept a communication involving the subscriber, and destination information identifying a device to which intercepted communications involving the subscriber are to be sent. When the determination information meets intercept criteria communications are established with a media relay through which communications involving the subscriber will be conducted or are being conducted to cause the media relay to send a copy of the communications involving the subscriber to a mediation device specified by the destination information.

48 Claims, 29 Drawing Sheets

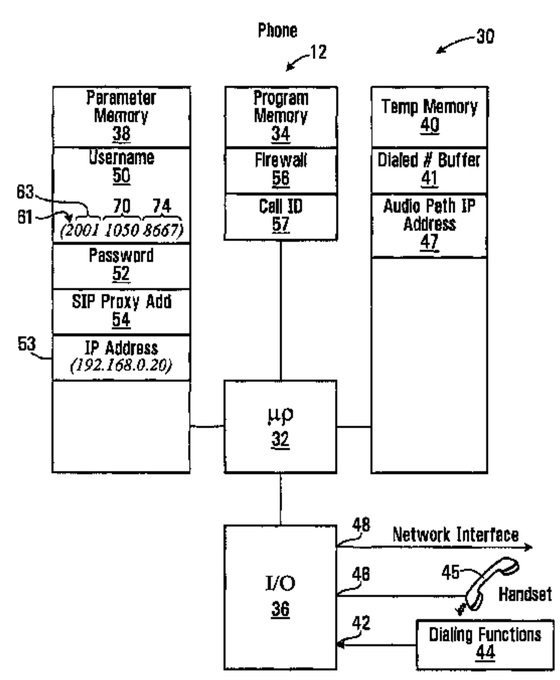

(51) **Int. Cl.**
H04L 29/06 (2006.01)
H04M 7/00 (2006.01)

(56) **References Cited**

U.S. PATENT DOCUMENTS

5,146,491 A 9/1992 Silver et al.
5,247,571 A 9/1993 Kay et al.
5,303,297 A 4/1994 Hillis
5,325,421 A 6/1994 Hou et al.
5,359,642 A 10/1994 Castro
5,425,085 A 6/1995 Weinberger et al.
5,440,621 A 8/1995 Castro
5,454,030 A 9/1995 de Oliveira et al.
5,469,497 A 11/1995 Pierce et al.
5,506,893 A 4/1996 Buscher et al.
5,519,769 A 5/1996 Weinberger et al.
5,559,871 A 9/1996 Smith
5,590,133 A 12/1996 Billstrom et al.
5,608,786 A 3/1997 Gordon
5,621,787 A 4/1997 McKoy et al.
5,633,913 A 5/1997 Talarmo
5,661,790 A 8/1997 Hsu
5,677,955 A 10/1997 Doggett et al.
5,712,907 A 1/1998 Wegner et al.
5,719,926 A 2/1998 Hill
5,722,067 A 2/1998 Fougnies et al.
5,724,355 A 3/1998 Bruno et al.
5,726,984 A 3/1998 Kubler et al.
5,737,414 A 4/1998 Walker et al.
5,751,961 A 5/1998 Smyk
5,793,762 A 8/1998 Penners et al.
5,799,072 A 8/1998 Vulcan et al.
5,802,502 A 9/1998 Gell et al.
5,825,863 A 10/1998 Walker
5,828,740 A 10/1998 Khuc et al.
5,838,682 A 11/1998 Dekelbaum et al.
5,845,267 A 12/1998 Ronen
5,850,433 A 12/1998 Rondeau
5,864,610 A 1/1999 Ronen
5,867,495 A 2/1999 Elliott et al.
5,883,810 A 3/1999 Franklin et al.
5,883,891 A 3/1999 Williams et al.
5,889,774 A 3/1999 Mirashrafi et al.
5,905,736 A 5/1999 Ronen et al.
5,907,547 A 5/1999 Foladare et al.
5,910,946 A 6/1999 Csapo
5,915,005 A 6/1999 He
5,915,093 A 6/1999 Berlin et al.
5,917,899 A 6/1999 Moss et al.
5,923,659 A 7/1999 Curry et al.
5,930,343 A 7/1999 Vasquez
5,937,045 A 8/1999 Yaoya et al.
5,940,598 A 8/1999 Strauss et al.
5,953,504 A 9/1999 Sokal et al.
5,956,391 A 9/1999 Melen et al.
5,970,477 A 10/1999 Roden
5,974,043 A 10/1999 Solomon
5,991,291 A 11/1999 Asai et al.
6,005,870 A 12/1999 Leung et al.
6,005,926 A 12/1999 Mashinsky
6,014,379 A 1/2000 White et al.
6,021,126 A 2/2000 White et al.
6,029,062 A 2/2000 Hanson
6,052,445 A 4/2000 Bashoura et al.
6,058,300 A 5/2000 Hanson
6,069,890 A 5/2000 White et al.
6,073,013 A 6/2000 Agre et al.
6,078,647 A 6/2000 D'Eletto
6,104,704 A 8/2000 Buhler et al.
6,104,711 A 8/2000 Voit
6,115,737 A 9/2000 Ely et al.
6,128,304 A 10/2000 Gardell et al.
6,137,869 A 10/2000 Voit et al.
6,141,404 A 10/2000 Westerlage et al.
6,151,385 A 11/2000 Reich et al.
6,173,272 B1 1/2001 Thomas et al.
6,188,752 B1 2/2001 Lesley
6,243,689 B1 6/2001 Norton
6,249,573 B1 6/2001 Hudson
6,282,574 B1 8/2001 Voit
6,298,062 B1 10/2001 Gardell et al.
6,327,351 B1 12/2001 Walker et al.
6,351,464 B1 2/2002 Galvin et al.
6,359,880 B1 3/2002 Curry et al.
6,430,275 B1 8/2002 Voit et al.
6,445,694 B1 9/2002 Swartz
6,507,644 B1 1/2003 Henderson et al.
6,553,025 B1 4/2003 Kung et al.
6,560,224 B1 5/2003 Kung et al.
6,574,328 B1 6/2003 Wood et al.
6,597,686 B1 7/2003 Smyk
6,597,783 B1 7/2003 Tada et al.
6,636,833 B1 10/2003 Flitcroft et al.
6,650,641 B1 11/2003 Albert et al.
6,674,745 B1 1/2004 Schuster et al.
6,724,860 B2 4/2004 Stumer et al.
6,744,858 B1 6/2004 Ryan et al.
6,766,159 B2 7/2004 Lindholm
6,772,188 B1 8/2004 Cloutier
6,775,534 B2 8/2004 Lindgren et al.
6,785,266 B2 8/2004 Swartz
6,798,767 B1 9/2004 Alexander et al.
6,819,929 B2 11/2004 Antonucci et al.
6,873,599 B1 3/2005 Han
6,892,184 B1 5/2005 Komem et al.
6,934,279 B1 8/2005 Sollee et al.
6,937,713 B1 8/2005 Kung et al.
6,954,453 B1 10/2005 Schindler
6,963,557 B2 11/2005 Knox
6,963,739 B2 11/2005 Dorenbosch et al.
6,985,440 B1 1/2006 Albert et al.
6,993,015 B2 1/2006 Kobayashi
7,006,508 B2 2/2006 Bondy et al.
7,010,727 B1 3/2006 Stucker
7,027,564 B2 4/2006 James
7,046,658 B1 5/2006 Kundaje
7,051,072 B2 5/2006 Stewart et al.
7,055,174 B1 5/2006 Cope et al.
7,068,668 B2 6/2006 Feuer
7,068,772 B1 6/2006 Widger et al.
7,079,526 B1 7/2006 Wipliez et al.
7,120,682 B1 10/2006 Salama
7,151,772 B1 12/2006 Kalmanek, Jr. et al.
7,177,399 B2 2/2007 Dawson et al.
7,203,478 B2 4/2007 Benco et al.
7,212,522 B1 5/2007 Shankar et al.
7,277,528 B2 10/2007 Rao et al.
7,330,835 B2 2/2008 Deggendorf
7,400,881 B2 7/2008 Kallio
7,426,492 B1 9/2008 Bishop et al.
7,436,835 B2 10/2008 Castleberry et al.
7,437,665 B2 10/2008 Perham
7,440,442 B2 10/2008 Grabelsky et al.
7,447,707 B2 11/2008 Gaurav et al.
7,454,200 B2 11/2008 Cai et al.
7,454,510 B2 11/2008 Kleyman et al.
7,486,664 B2 2/2009 Swartz
7,486,667 B2 2/2009 Feuer
7,512,117 B2 3/2009 Swartz
7,565,131 B2 7/2009 Rollender et al.
7,573,982 B2 8/2009 Breen et al.
7,580,886 B1 8/2009 Schulz
7,587,036 B2 9/2009 Wood et al.
7,593,390 B2 9/2009 Lebizay
7,593,884 B2 9/2009 Rothman et al.
7,599,944 B2 10/2009 Gaurav et al.
7,639,792 B2 12/2009 Qiu et al.
7,644,037 B1 1/2010 Ostrovsky
7,647,500 B2 1/2010 Machiraju et al.
7,657,011 B1 * 2/2010 Zielinski et al. 379/93.02
7,664,495 B1 2/2010 Bonner et al.
7,676,215 B2 3/2010 Chin et al.
7,676,431 B2 3/2010 O'Leary et al.
7,680,114 B2 3/2010 Yazaki et al.

(56) **References Cited**

U.S. PATENT DOCUMENTS

7,680,737 B2 3/2010 Smith et al.
7,702,308 B2 4/2010 Rollender
7,715,821 B2 5/2010 Rollender
7,734,544 B2 6/2010 Schleicher
7,738,384 B2 6/2010 Pelletier
7,764,777 B2 7/2010 Wood et al.
7,764,944 B2 7/2010 Rollender
7,765,261 B2 7/2010 Kropivny
7,765,266 B2 7/2010 Kropivny
7,797,459 B1 9/2010 Roy et al.
7,882,011 B2 2/2011 Sandhu et al.
7,894,441 B2 2/2011 Yazaki et al.
7,899,742 B2 3/2011 Benkert et al.
7,907,551 B2 3/2011 Croy et al.
7,929,955 B1 4/2011 Bonner
7,944,909 B2 5/2011 James
7,950,046 B2 5/2011 Kropivny
7,958,233 B2 6/2011 Gutierrez
7,965,645 B2 6/2011 Pelletier
7,979,529 B2 7/2011 Kreusch et al.
7,995,589 B2 8/2011 Sollee et al.
8,024,785 B2 9/2011 Andress et al.
8,027,333 B2 9/2011 Grabelsky et al.
8,041,022 B1 * 10/2011 Andreasen et al. 379/221.1
8,050,273 B2 11/2011 Gass
8,060,887 B2 11/2011 Kropivny
8,078,164 B2 12/2011 Ganesan
8,111,690 B2 2/2012 Hussain et al.
8,116,307 B1 2/2012 Thesayi et al.
8,125,982 B2 2/2012 Feuer
8,127,005 B2 2/2012 Gutierrez
8,145,182 B2 3/2012 Rudolf et al.
8,161,078 B2 4/2012 Gaurav et al.
8,166,533 B2 4/2012 Yuan
8,166,547 B2 4/2012 Bevan et al.
8,189,568 B2 5/2012 Qiu et al.
8,190,739 B2 5/2012 Gutierrez
8,200,575 B2 6/2012 Torres et al.
8,204,044 B2 6/2012 Lebizay
8,219,115 B1 7/2012 Nelissen
8,223,927 B2 7/2012 Di Serio et al.
8,228,837 B2 7/2012 Sheriff et al.
8,228,897 B2 7/2012 Mitchell
8,243,730 B1 8/2012 Wong et al.
8,244,204 B1 8/2012 Chen et al.
8,275,404 B2 9/2012 Berger et al.
8,300,632 B2 10/2012 Davis et al.
8,306,063 B2 11/2012 Erdal et al.
8,315,521 B2 11/2012 Leiden et al.
8,363,647 B2 1/2013 Fangman et al.
8,364,172 B2 1/2013 Guanfeng et al.
8,396,445 B2 3/2013 Crawford et al.
8,410,907 B2 4/2013 Twitchell, Jr.
8,417,791 B1 4/2013 Peretz et al.
8,423,791 B1 4/2013 Yu et al.
8,427,981 B2 4/2013 Wyss et al.
8,437,340 B2 5/2013 James
8,462,915 B2 6/2013 Breen et al.
8,468,196 B1 6/2013 Roskind et al.
8,493,931 B1 7/2013 Nix
8,509,225 B2 8/2013 Grabelsky et al.
8,526,306 B2 9/2013 Jungck et al.
8,532,075 B2 9/2013 Rassool et al.
8,537,805 B2 9/2013 Björsell et al.
8,542,815 B2 9/2013 Perreault et al.
8,543,477 B2 9/2013 Love et al.
8,599,747 B1 12/2013 Saleem et al.
8,599,837 B2 12/2013 Kyle
8,605,714 B2 12/2013 Lebizay
8,605,869 B1 12/2013 Mobarak et al.
8,607,323 B2 12/2013 Yuan
8,611,354 B2 12/2013 Keränen et al.
8,625,578 B2 1/2014 Roy et al.
8,627,211 B2 1/2014 Kropivny
8,630,234 B2 1/2014 Björsell et al.
8,634,838 B2 1/2014 Hellwig et al.
8,675,566 B2 3/2014 Huttunen et al.
8,682,919 B1 3/2014 Golliher
8,702,505 B2 4/2014 Kropivny
8,713,098 B1 4/2014 Adya et al.
8,724,643 B2 5/2014 Feuer
8,749,610 B1 6/2014 Gossweiler et al.
8,750,290 B2 6/2014 Vance et al.
8,763,081 B2 6/2014 Bogdanovic et al.
8,767,717 B2 7/2014 Siegel et al.
8,768,951 B2 7/2014 Crago
8,774,171 B2 7/2014 Mitchell
8,774,378 B2 7/2014 Björsell et al.
8,774,721 B2 7/2014 Hertel et al.
8,780,703 B1 7/2014 Eidelson et al.
8,792,374 B1 7/2014 Jain et al.
8,792,905 B1 7/2014 Li et al.
8,804,705 B2 8/2014 Fangman et al.
8,805,345 B2 8/2014 Ling et al.
8,810,392 B1 8/2014 Teller et al.
8,819,566 B2 8/2014 Mehin et al.
8,837,360 B1 9/2014 Mishra et al.
8,838,539 B1 9/2014 Ashcraft et al.
8,848,887 B2 9/2014 Willman et al.
8,862,701 B2 10/2014 Havriluk
8,885,609 B2 11/2014 Nix
8,903,051 B2 12/2014 Li et al.
8,903,360 B2 12/2014 Celi, Jr. et al.
8,909,556 B2 12/2014 Huxham
8,938,209 B2 1/2015 Crawford et al.
8,938,534 B2 1/2015 Le et al.
8,948,061 B2 2/2015 Sridhar
8,972,612 B2 3/2015 Le et al.
8,982,719 B2 3/2015 Seetharaman et al.
8,995,428 B2 3/2015 Haster
9,003,306 B2 4/2015 Mehin et al.
2001/0027478 A1 10/2001 Meier et al.
2001/0052081 A1 12/2001 McKibben et al.
2002/0002041 A1 1/2002 Lindgren et al.
2002/0018445 A1 2/2002 Kobayashi
2002/0051518 A1 5/2002 Bondy et al.
2002/0116464 A1 8/2002 Mak
2002/0122391 A1 9/2002 Shalit
2002/0141352 A1 10/2002 Fangman et al.
2003/0012196 A1 1/2003 Ramakrishnan
2003/0095539 A1 5/2003 Feuer
2003/0179747 A1 9/2003 Pyke et al.
2003/0200311 A1 10/2003 Baum
2003/0219103 A1 11/2003 Rao et al.
2004/0022237 A1 2/2004 Elliott et al.
2004/0034793 A1 2/2004 Yuan
2004/0157629 A1 8/2004 Kallio et al.
2004/0165709 A1 8/2004 Pence et al.
2004/0181599 A1 9/2004 Kreusch et al.
2004/0202295 A1 10/2004 Shen et al.
2004/0203565 A1 10/2004 Chin et al.
2004/0203582 A1 10/2004 Dorenbosch et al.
2004/0240439 A1 12/2004 Castleberry et al.
2004/0255126 A1 12/2004 Reith
2005/0025043 A1 2/2005 Mussman et al.
2005/0063519 A1 3/2005 James
2005/0083911 A1 4/2005 Grabelsky et al.
2005/0094651 A1 5/2005 Lutz et al.
2005/0131813 A1 6/2005 Gallagher et al.
2005/0169248 A1 8/2005 Truesdale et al.
2005/0171898 A1 8/2005 Bishop et al.
2005/0174937 A1 8/2005 Scoggins et al.
2005/0177843 A1 8/2005 Williams
2005/0188081 A1 * 8/2005 Gibson et al. 709/224
2005/0190892 A1 9/2005 Dawson et al.
2005/0192897 A1 9/2005 Rogers et al.
2005/0192901 A1 9/2005 McCoy et al.
2005/0198499 A1 9/2005 Salapaka et al.
2005/0202799 A1 9/2005 Rollender
2005/0222952 A1 10/2005 Garrett et al.
2005/0267842 A1 12/2005 Weichert et al.
2005/0287979 A1 12/2005 Rollender
2006/0006224 A1 1/2006 Modi
2006/0007940 A1 1/2006 Sollee et al.

(56) **References Cited**

U.S. PATENT DOCUMENTS

2006/0013266 A1 1/2006 Vega-Garcia et al.
2006/0030290 A1 2/2006 Rudolf et al.
2006/0036522 A1 2/2006 Perham
2006/0072547 A1 4/2006 Florkey et al.
2006/0072550 A1 4/2006 Davis et al.
2006/0078094 A1 4/2006 Breen et al.
2006/0093135 A1 5/2006 Fiatal et al.
2006/0095320 A1 5/2006 Jones
2006/0111116 A1 5/2006 Palmer et al.
2006/0116892 A1 6/2006 Grimes et al.
2006/0142011 A1 6/2006 Kallio
2006/0146797 A1 7/2006 Lebizay
2006/0153342 A1 7/2006 Sasaki
2006/0160565 A1 7/2006 Singh et al.
2006/0177035 A1 8/2006 Cope et al.
2006/0189303 A1 8/2006 Rollender
2006/0195398 A1 8/2006 Dheer et al.
2006/0205383 A1 9/2006 Rollender et al.
2006/0209768 A1 9/2006 Yan et al.
2006/0248186 A1* 11/2006 Smith 709/224
2006/0251056 A1 11/2006 Feuer
2006/0258328 A1 11/2006 Godoy
2006/0264200 A1 11/2006 Laiho et al.
2006/0268921 A1* 11/2006 Ekstrom et al. 370/437
2006/0281437 A1 12/2006 Cook
2007/0016524 A1 1/2007 Diveley et al.
2007/0036143 A1 2/2007 Alt et al.
2007/0047548 A1 3/2007 Yazaki et al.
2007/0053382 A1 3/2007 Bevan et al.
2007/0092070 A1 4/2007 Croy et al.
2007/0112964 A1 5/2007 Guedalia et al.
2007/0115935 A1 5/2007 Qiu et al.
2007/0121593 A1 5/2007 Vance et al.
2007/0127676 A1 6/2007 Khadri
2007/0174469 A1 7/2007 Andress et al.
2007/0217354 A1 9/2007 Buckley
2007/0220038 A1 9/2007 Crago
2007/0253418 A1 11/2007 Shiri et al.
2007/0253429 A1 11/2007 James
2007/0263609 A1 11/2007 Mitchell
2007/0297376 A1 12/2007 Gass
2008/0013523 A1 1/2008 Nambakkam
2008/0037715 A1 2/2008 Prozeniuk et al.
2008/0056235 A1 3/2008 Albina et al.
2008/0056243 A1 3/2008 Roy et al.
2008/0056302 A1 3/2008 Erdal et al.
2008/0063153 A1 3/2008 Krivorot et al.
2008/0166999 A1 7/2008 Guedalia et al.
2008/0167019 A1 7/2008 Guedalia et al.
2008/0167020 A1 7/2008 Guedalia et al.
2008/0167039 A1 7/2008 Guedalia et al.
2008/0187122 A1 8/2008 Baker
2008/0188198 A1 8/2008 Patel et al.
2008/0188227 A1 8/2008 Guedalia et al.
2008/0205378 A1 8/2008 Wyss et al.
2008/0310599 A1 12/2008 Purnadi et al.
2009/0003535 A1 1/2009 Grabelsky et al.
2009/0028146 A1 1/2009 Kleyman et al.
2009/0129566 A1 5/2009 Feuer
2009/0135724 A1 5/2009 Zhang et al.
2009/0135735 A1 5/2009 Zhang et al.
2009/0141883 A1 6/2009 Bastien
2009/0213839 A1 8/2009 Davis et al.
2009/0214000 A1 8/2009 Patel et al.
2009/0268615 A1 10/2009 Pelletier
2009/0292539 A1 11/2009 Jaroker
2009/0296900 A1 12/2009 Breen et al.
2009/0325558 A1 12/2009 Pridmore et al.
2010/0008345 A1 1/2010 Lebizay
2010/0039946 A1* 2/2010 Imbimbo et al. 370/252
2010/0083364 A1 4/2010 Gutierrez
2010/0086119 A1 4/2010 De Luca et al.
2010/0105379 A1 4/2010 Bonner et al.
2010/0114896 A1 5/2010 Clark et al.
2010/0115018 A1 5/2010 Yoon et al.
2010/0128729 A1 5/2010 Yazaki et al.
2010/0142382 A1 6/2010 Jungck et al.
2010/0150138 A1 6/2010 Björsell et al.
2010/0150328 A1 6/2010 Perreault et al.
2010/0172345 A1 7/2010 Björsell et al.
2010/0177671 A1 7/2010 Qiu et al.
2010/0220852 A1 9/2010 Willman et al.
2010/0233991 A1 9/2010 Crawford et al.
2010/0246589 A1 9/2010 Pelletier
2010/0272242 A1 10/2010 Croy et al.
2010/0278534 A1 11/2010 Leiden et al.
2010/0316195 A1 12/2010 Di Serio et al.
2011/0013541 A1 1/2011 Croy et al.
2011/0072095 A1 3/2011 Havriluk
2011/0122827 A1 5/2011 Björsell et al.
2011/0153809 A1 6/2011 Ghanem et al.
2011/0167164 A1 7/2011 Gutierrez
2011/0176541 A1 7/2011 James
2011/0201321 A1 8/2011 Bonner
2011/0208859 A1 8/2011 Gutierrez
2011/0235543 A1 9/2011 Seetharaman et al.
2011/0255553 A1 10/2011 Bobba et al.
2011/0261717 A1 10/2011 Akuzuwa et al.
2011/0267986 A1 11/2011 Grabelsky et al.
2011/0273526 A1 11/2011 Mehin et al.
2011/0276903 A1 11/2011 Mehin et al.
2011/0276904 A1 11/2011 Mehin et al.
2011/0292929 A1 12/2011 Haster
2012/0014383 A1 1/2012 Geromel et al.
2012/0089717 A1 4/2012 Chen
2012/0096145 A1 4/2012 Le et al.
2012/0099599 A1 4/2012 Keränen et al.
2012/0113981 A1 5/2012 Feuer
2012/0155333 A1 6/2012 Yoon et al.
2012/0170574 A1 7/2012 Huttunen et al.
2012/0195236 A1 8/2012 Knight
2012/0195415 A1 8/2012 Wyss et al.
2012/0227101 A1 9/2012 Yuan
2012/0250624 A1 10/2012 Lebizay
2012/0259975 A1 10/2012 Le et al.
2012/0270554 A1 10/2012 Hellwig et al.
2012/0282881 A1 11/2012 Mitchell
2012/0314699 A1 12/2012 Qiu et al.
2013/0039226 A1 2/2013 Sridhar
2013/0097308 A1 4/2013 Le et al.
2013/0114589 A1 5/2013 Fangman et al.
2013/0128879 A1 5/2013 Kyle
2013/0148549 A1 6/2013 Crawford et al.
2013/0173534 A1 7/2013 Nelakonda et al.
2013/0223276 A1 8/2013 Padgett
2013/0237198 A1 9/2013 Vashi et al.
2013/0254301 A1 9/2013 Lin et al.
2013/0272297 A1 10/2013 Breen et al.
2013/0281147 A1 10/2013 Denman et al.
2013/0287006 A1 10/2013 Nix
2013/0310002 A1 11/2013 Celi, Jr. et al.
2013/0318166 A1 11/2013 Jungck et al.
2013/0329722 A1 12/2013 Perrault et al.
2013/0329864 A1 12/2013 Björsell et al.
2014/0010119 A1 1/2014 Björsell et al.
2014/0016764 A1 1/2014 Björsell et al.
2014/0024367 A1 1/2014 Björsell et al.
2014/0101749 A1 4/2014 Yuan
2014/0141884 A1 5/2014 Kropivny
2014/0153477 A1 6/2014 Huttunen et al.
2014/0211789 A1 7/2014 Feuer
2014/0215642 A1 7/2014 Huxham
2014/0220944 A1 8/2014 Balasubramanian
2014/0244393 A1 8/2014 Rimmer et al.
2014/0247730 A1 9/2014 Thota et al.
2014/0269624 A1 9/2014 Khay-Ibbat et al.
2014/0307858 A1 10/2014 Li et al.
2014/0321333 A1 10/2014 Björsell et al.
2014/0324969 A1 10/2014 Riddle
2014/0337961 A1 11/2014 Chien et al.

(56) **References Cited**

U.S. PATENT DOCUMENTS

2014/0337962	A1	11/2014	Brandstatter
2014/0349602	A1	11/2014	Majumdar et al.

FOREIGN PATENT DOCUMENTS

CA	2 218 218	A1	10/1997
CA	2249668		4/1999
CA	2 299 037	A1	8/2000
CA	2 437 275	A1	10/2002
CA	2598200	A1	2/2008
CA	2668025	A1	5/2008
CA	2670510	A1	6/2008
CA	2 681 984	A1	10/2008
CA	2 690 236	A1	12/2008
CA	2 659 007	A1	9/2009
CA	2732148	A1	2/2010
CA	2 778 905	A1	8/2010
CA	2812174	A1	3/2011
CN	1498029	A	5/2004
CN	1498482	A	5/2004
CN	1668137	A	9/2005
CN	1274114	C	9/2006
CN	101005503	A	7/2007
CN	101069390	A	11/2007
CN	101095329	A	12/2007
CN	101584150	A	11/2009
CN	101584166	A	11/2009
CN	101605342	A	12/2009
CN	1498029	B	5/2010
CN	101772929	A	7/2010
CN	101069390	B	12/2010
CN	102137024	A	7/2011
CN	102457494	A	5/2012
CN	102484656	A	5/2012
CN	102572123	A	7/2012
CN	101095329	B	10/2012
CN	101605342	B	12/2012
CN	102833232	A	12/2012
CN	101005503	B	1/2013
CN	101772929	B	7/2014
CN	102457494	B	10/2014
DE	602 01 827	T2	11/2005
DE	11 2005 003 306	T5	1/2008
DE	601 33 316	T2	7/2008
DE	603 17 751	T2	11/2008
EP	0 841 832	A2	5/1998
EP	0 841 832	A3	5/1999
EP	1 032 224	A2	8/2000
EP	1 032 224	A3	8/2000
EP	1 244 250	A1	9/2002
EP	1 266 516	A2	12/2002
EP	1 362 456	A2	11/2003
EP	1 371 173	A1	12/2003
EP	1 389 862	A1	2/2004
EP	1 411 743	A1	4/2004
EP	1 389 862	B1	11/2004
EP	1 526 697	A2	4/2005
EP	1 362 456	A4	5/2005
EP	1 575 327	A1	9/2005
EP	1 610 583	A1	12/2005
EP	1 526 697	A3	3/2006
EP	1 721 446	A1	11/2006
EP	1 829 300	A1	9/2007
EP	1 371 173	B1	11/2007
EP	1 411 743	B1	11/2007
EP	1 362 456	B1	3/2008
EP	1 974 304	A2	10/2008
EP	1 974 304	A4	10/2008
EP	1 610 583	B1	8/2009
EP	2 084 868		8/2009
EP	2 090 024		8/2009
EP	2 127 232	A1	12/2009
EP	2 165 489	A1	3/2010
EP	2 215 755	A1	8/2010
EP	2 227 048	A1	9/2010
EP	2 127 232	A4	3/2011
EP	2 165 489	A4	3/2011
EP	2 311 292		4/2011
EP	1 829 300	A4	5/2012
EP	2 449 749	A1	5/2012
EP	2 478 678		7/2012
EP	2 215 755	A4	10/2012
EP	1 829 300	B1	11/2012
EP	2 449 749	B1	3/2014
EP	1 266 516	B1	5/2014
ID	W00200902627		9/2009
IN	24/2009		6/2009
IN	1047/MUMNP/2009	A	6/2009
IN	29/2009		7/2009
IN	1227/MUMNP/2009	A	7/2009
JP	2011-199384 (A)		10/2011
KR	10-2009-0086428 (A)		8/2009
KR	10-2009-0095621 (A)		9/2009
MX	2009004811	A	8/2009
MX	2009005751	A	8/2009
SG	151991	A1	6/2009
SG	152752	A1	6/2009
SG	155474		10/2009
WO	WO 01/50693	A1	7/2001
WO	WO 01/69899	A2	9/2001
WO	WO 01/69899	A3	9/2001
WO	WO 01/80587	A1	10/2001
WO	WO 02/082728	A1	10/2002
WO	WO 02/082782	A2	10/2002
WO	WO 02/082782	A3	10/2002
WO	WO 03/027801	A2	4/2003
WO	WO 2005/084002	A1	9/2005
WO	WO 2006/067269	A1	6/2006
WO	WO 2006/072099	A1	7/2006
WO	WO 2006/078175	A2	7/2006
WO	WO 2006/078175	A3	7/2006
WO	WO 2007/044454	A2	4/2007
WO	WO 2007/056158	A2	5/2007
WO	WO 2007/087077	A2	8/2007
WO	WO 2007/087077	A3	8/2007
WO	WO 2008/027065	A1	3/2008
WO	WO 2008/052340	A1	5/2008
WO	WO 2008/064481	A1	6/2008
WO	WO 2008/085614	A2	7/2008
WO	WO 2008/085614	A3	7/2008
WO	WO 2008/086350	A2	7/2008
WO	WO 2008/086350	A3	7/2008
WO	WO 2008/103652	A1	8/2008
WO	WO 2008/116296	A1	10/2008
WO	WO 2008/085614	A8	12/2008
WO	WO 2008/151406	A1	12/2008
WO	WO 2008/151406	A8	12/2008
WO	WO 2009/070202	A1	6/2009
WO	WO 2009/070278	A1	6/2009
WO	WO 2010/012090	A2	2/2010
WO	WO 2011/000405	A1	1/2011
WO	WO 2011/032256	A1	3/2011
WO	WO 01/89145	A2	11/2011
WO	WO 2013/013189	A2	1/2013
WO	WO 2013/120069	A1	8/2013
WO	WO 2014/066155	A2	5/2014
WO	WO 2014/117599	A1	8/2014
WO	WO 2014-166258	A1	10/2014

OTHER PUBLICATIONS

Extended European Search Report dated Dec. 20, 2013 for European Application No. EP 09 849 358.8.

F. Baker et al. "RFC 3924—Cisco Architecture for Lawful Intercept in IP Networks." Oct. 2004.

Cisco. "*Lawful Intercept Requirements Summary.*" http://www.faqs.org/rfcs/rfc3924.html. Nov. 8, 2006.

Sippy Sip B2BUA. "*About Sippy RTPproxy.*" http://www.rtpproxy.org. Jul. 15, 2009.

(56) **References Cited**

OTHER PUBLICATIONS

ETSI Technical Specification. "Lawful Interception (LI); Handover Interface and Service-Specific Details (SSD) for IP delivery; Part 5: Service-specific details for IP Multimedia Services." Apr. 2008, 25 pgs, v.2.3.1, France.
M. Handley et al. "RFC 2543—SIP: Session Initiation Protocol." Mar. 1999.
International Search Report and Written Opinion of the International Searching Authority completed Jun. 6, 2008 for related PCT/CA2008/000545.
International Search Report and Written Opinion of the International Searching Authority completed Feb. 6, 2008 for corresponding PCT/CA2007/001956.
International Preliminary Report on Patentability mailed May 14, 2009 for corresponding PCT/CA2007/001956.
International Search Report and Written Opinion of the International Searching Authority completed Mar. 3, 2008 for related PCT/CA2007/002150.
International Preliminary Report on Patentability mailed Feb. 13, 2009 for related PCT/CA2007/002150.
International Preliminary Report on Patentability and Written Opinion of the International Searching Authority mailed Feb. 10, 2011 for related PCT Application No. PCT/CA2009/001062, Feb. 1, 2011.
Written Opinion and International Search Report completed on Jun. 18, 2010 for related PCT Application No. PCT/CA2009/001317.
International Search Report and Written Opinion mailed on Mar. 12, 2010 for corresponding PCT Application No. PCT/CA2009/001062.
International Preliminary Report on Patentability issued on Sep. 29, 2009 for PCT/CA2008/000545.
International Preliminary Report on Patentability issued on Mar. 20, 2012 for PCT/CA2009/001317.
Townsley, et al.; "RFC 2661—Layer Two Tunneling Protocol 'L2TP' ", Aug. 1999.
IP2Location, http://www.ip2location.com/; printed Jun. 20, 2012.
DOTS IP Address Validation, "Overview", http://www.serviceobjects.com/products/dots_ipgeo.asp; printed Jun. 21, 2012.
List of North American Numbering Plan area codes, http://en.wikipedia.org/wiki/List_of_NANP_area_codes; printed Jun. 20, 2012.
DOTS Phone Exchange, "Overview", http://www.serviceobjects.com/demos/PhoneExchangeDemo.asp (URL no longer valid, current URL is http://vvww.serviceobjects.com/products/phone/phone-exchange); printed Jun. 21, 2012.
Rosenberg, et al.; "RFC 3261—SIP: Session Initiation Protocol", Jun. 2002.
Lind AT&T S: "ENUM Call Flows for VoIP Interworking; draft-lind-enum-callflows-03.txt", No. 3, Feb. 1, 2002, pp. 1-17, XP015004214, ISSN: 0000-0004.
IETF ENUM WG R STASTNY OEFEG Informational Numbering for VOIP and Other IP Communications: "Numbering for ViOP and other IP Communications, draft-stastny-enum-numbering-voip-00.txt", Oct. 1, 2003, pp. 1-43, XP015035676, ISSN: 0000-0004.
Supplementary European Search Report for European Application No. 07816106, dated Jun. 18, 2012.
Supplementary European Search Report for European Application No. 07816106, dated Nov. 2, 2012.
Wikipedia, "International mobile subscriber identity (IMSI)," http://en.wikipedia.org/wiki/IMSI, Jul. 16, 2013.
Wikipedia, "Roaming," http://en.wikipedia.org/wiki/Roaming, Jul. 16, 2013.
Extended European Search Report dated Apr. 16, 2014 for European Patent Application No. EP 09 802 316.1 which shares priority of U.S. Appl. No. 61/129,898, filed Jul. 28, 2008 with U.S. Appl. No. 13/056,277, filed Jan. 27, 2011, which is related to captioned U.S. Appl. No. 13/863,306, and cites above-identified reference Nos. 1 and 2.
Baker et al., "Cisco Support for Lawful Intercept In IP Networks," Internet Draft—working document of the Internet Engineering Task Force (IETF), accessible at http://www.ietf.org/ietf/lid-abstracts.txt, Apr. 2003, expires Sep. 30, 2003, pp. 1-15.
Bhushan et al., "Federated Accounting: Service Charging and Billing in a Business-to-Business Environment," 0-7803-6719-7/01, © 2001 IEEE, pp. 107-121.
Jajszczyk et al., "Emergency Calls in Flow-Aware Networks," *IEEE Communications Letters*, vol. 11, No. 9, Sep. 2007, pp. 753-755.
Kim et al., "An Enhanced VoIP Emergency Services Prototype," *Proceedings of the 3rd International ISCRAM Conference* (*B. Van de Walle and M. Turoff, eds.*), Newark, NJ (USA), May 2006, pp. 1-8.
Kornfeld et al., "DVB-H and IP Datacast—Broadcast to Handheld Devices," *IEEE Transactions On Broadcasting*, vol. 53, No. 1, Mar. 2007, pp. 161-170.
Kortebi et al., "SINR-Based Routing in Multi-Hop Wireless Networks to Improve VoIP Applications Support," 1-4244-0667-6/07, © 2007 IEEE, pp. 491-496.
Lee et al., "VoIP Interoperation with KT-NGN," in *The 6th International Conference on Advanced Communication Technology*, Technical Proceedings, 2004, pp. 126-128, accompanied by Title and Contents—4 pages.
Lin et al., "Effective VoIP Call Routing in WLAN and Cellular Integration," *IEEE Communications Letters*, vol. 9, No. 10, Oct. 2005, pp. 874-876.
Ma et al., "Realizing MPEG4 Video Transmission Based on Mobile Station over GPRS," 0-7803-9335-X/05, © 2005 IEEE, pp. 1241-1244.
Mintz-Habib et al., "A VoIP Emergency Services Architecture and Prototype," {mm2571,asr,hgs,xiaotaow}@cs.columbia.edu, 0-7803-9428-3/05, © 2005 IEEE, pp. 523-528.
Munir, Muhammad Farukh, "Study of an Adaptive Scheme for Voice Transmission on IP in a Wireless Networking Environment 802.11e," *Dept. of Networks and Distributed Computing, Ecole Supérieure En Sciences Informatiques* (*ESSI*), *Université De Nice*, Jun. 2005, (pp. 1-35), Best Available Copy—pp. 1-11.
Sripanidkulchai et al., "Call Routing Management in Enterprise VoIP Networks," *Copyright 2007 ACM* 978-1-59593-788-9/07/0008, 6 pages.
Thernelius, Fredrik, "SIP, NAT, and Firewalls," Master's Thesis, *Ericsson, Department of Teleinformatics*, May 2000, pp. 1-69.
Trad et al., "Adaptive VoIP Transmission over Heterogeneous Wired/Wireless Networks," *V. Roca and F. Rousscau* (*Eds.*): *MIPS* 2004, *LNCS* 3311, pp. 25-36, 2004, © Springer-Verlag Berlin Heidelberg 2004.
Yu et al., "Service-Oriented Issues: Mobility, Security, Charging and Billing Management in Mobile Next Generation Networks," *IEEE BcN*2006, 1-4244-0146-1/06, © 2006 IEEE, pp. 1-10.
ETSI TS 122 173 V12.7.0 (Oct. 2014) Digital cellular telecommunications system (Phase 2+); Technical Specification 8.2.2.3—Interoperability with PSTN/ISDN and mobile CS Networks, Contents and Forward, pp. 1-9; Sec. 8, pp. 14-17.
Huitema et al., "Architecture for Internet Telephony Service for Residential Customers," Academic Paper for *Bellcore*, Mar. 2, 1999, pp. 1-14.
Stallings, William, "The Session Initiation Protocol," *The Internet Protocol Journal*, vol. 6, No. 1, Mar. 2003, pp. 20-30.
Chinese Office Action dated Mar. 24, 2011 for Chinese Patent Application No. CN 200780049791.5.
Chinese Office Action dated Jun. 23, 2011 for Chinese Patent Application No. CN 200780049136.X.
Canadian Office Action dated Jan. 27, 2015 for Canadian Patent Application No. CA 2,681,984.
Indonesian Examination Report dated Jul. 5, 2012 for Indonesian Patent Application No. W-00200901414.
Indonesian Examination Report dated Feb. 8, 2013 for Indonesian Patent Application No. W-00200901165.
Mexican Exam Report dated Jul. 11, 2011 for Mexican Patent Application No. MX/a/2009/004811.
Mexican Notice of Allowance dated Sep. 2, 2011 for Mexican Patent Application No. MX/a/2009/005751.
Ketchpel et al. "U-PAI: A universal payment application interface" *Second USENIX Workshop on Electronic Commerce Proceedings*, 1996-8, pp. 1-17.

(56) **References Cited**

OTHER PUBLICATIONS

Moberg & Drummond, "MIME-Based Secure Peer-to-Peer Business Data Interchange Using HTTP, Applicability Statement 2 (AS2)," *Network Working Group*, Request for Comments: 4130, Category: Standards Track, Copyright © The Internet Society Jul. 2005, pp. 1-47.

Abrazhevich, Dennis, "Electronic Payment Systems: a User-Centered Perspective and Interaction Design," *Thesis under the auspices of the J.F. Schouten School for User-System Interaction Research*, Technische Universiteit Eindhoven, Netherlands, 2004, pages Cover p.-p. 189.

* cited by examiner

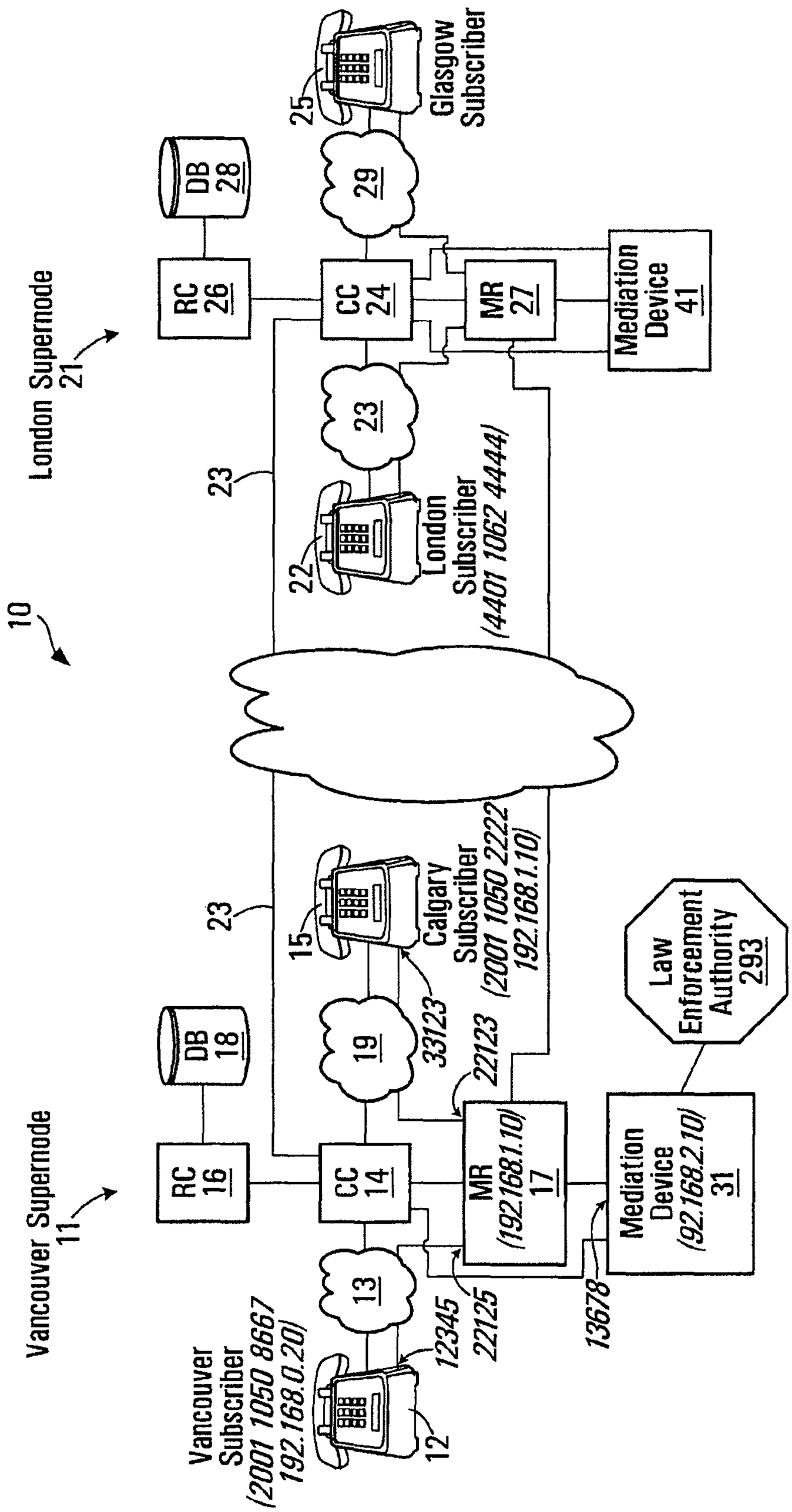
10
London Supernode
21
Vancouver Supernode
11
RC
26
DB
28
CC
24
MR
27
Mediation
Device
41
29
25
Glasgow
Subscriber
23
23
23
22
London
Subscriber
(4401 1062 4444)
15
Calgary
Subscriber
(2001 1050 2222
192.168.1.10)
33123
22123
RC
16
DB
18
CC
14
19
MR
(192.168.1.10)
17
Mediation
Device
(92.168.2.10)
31
Law
Enforcement
Authority
293
13
12345
22125
13678
Vancouver
Subscriber
(2001 1050 8667
192.168.0.20)
12

FIG. 1

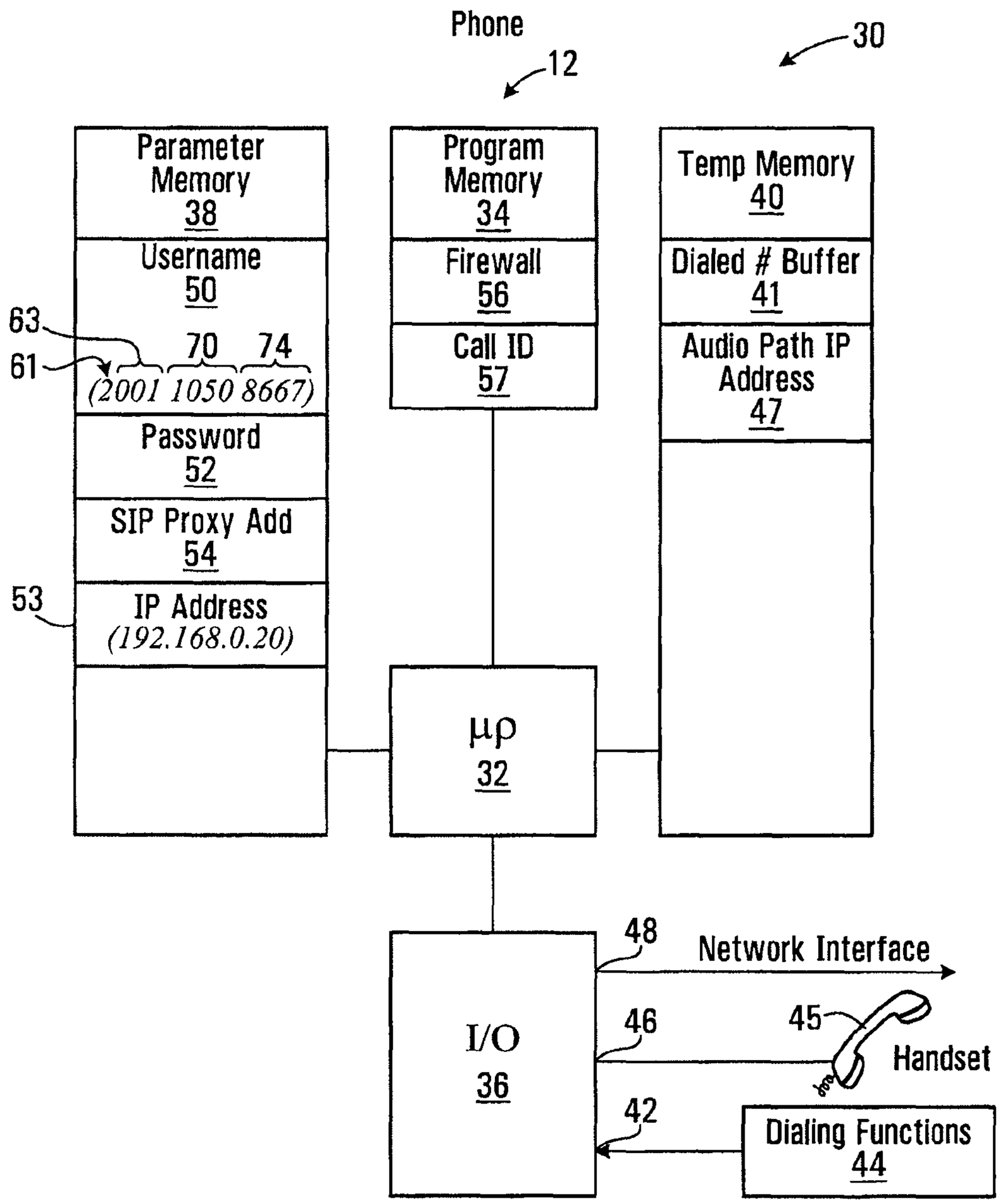
Phone
12
30
Parameter Memory 38
Username 50
63
61
70
74
(2001 1050 8667)
Password 52
SIP Proxy Add 54
53
IP Address (192.168.0.20)
Program Memory 34
Firewall 56
Call ID 57
Temp Memory 40
Dialed # Buffer 41
Audio Path IP Address 47
μp 32
I/O 36
48
Network Interface
46
45
Handset
42
Dialing Functions 44

FIG. 2

SIP Invite Message

60 Caller	2001 1050 8667
62 Callee	2001 1050 2222
64 Digest Parameters	XXXXXXX
65 Call ID	FF10@ 192.168.0.20
67 Caller IP Address	192.168.0.20
69 Caller UDP port	12345

FIG. 3

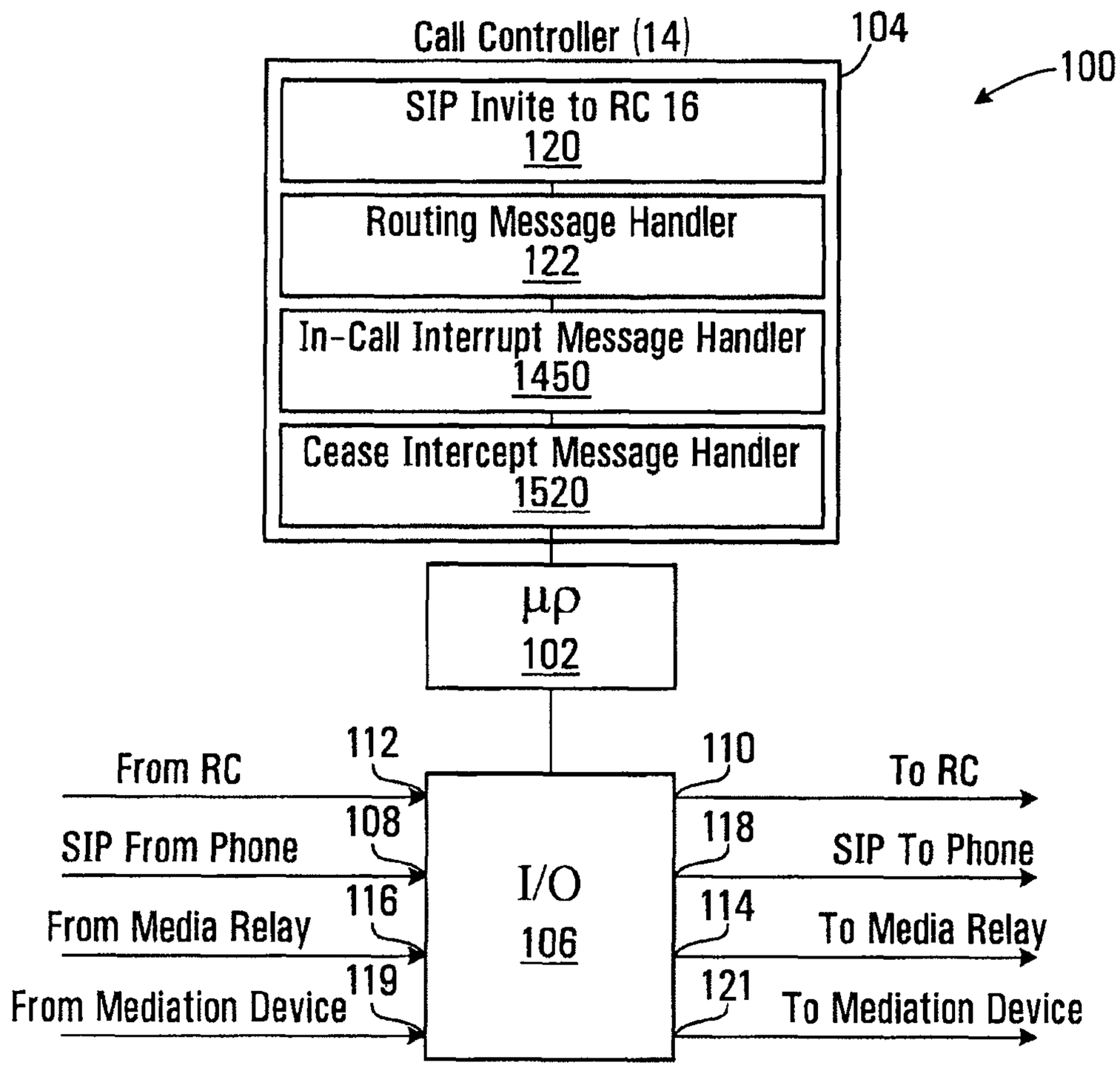

FIG. 4

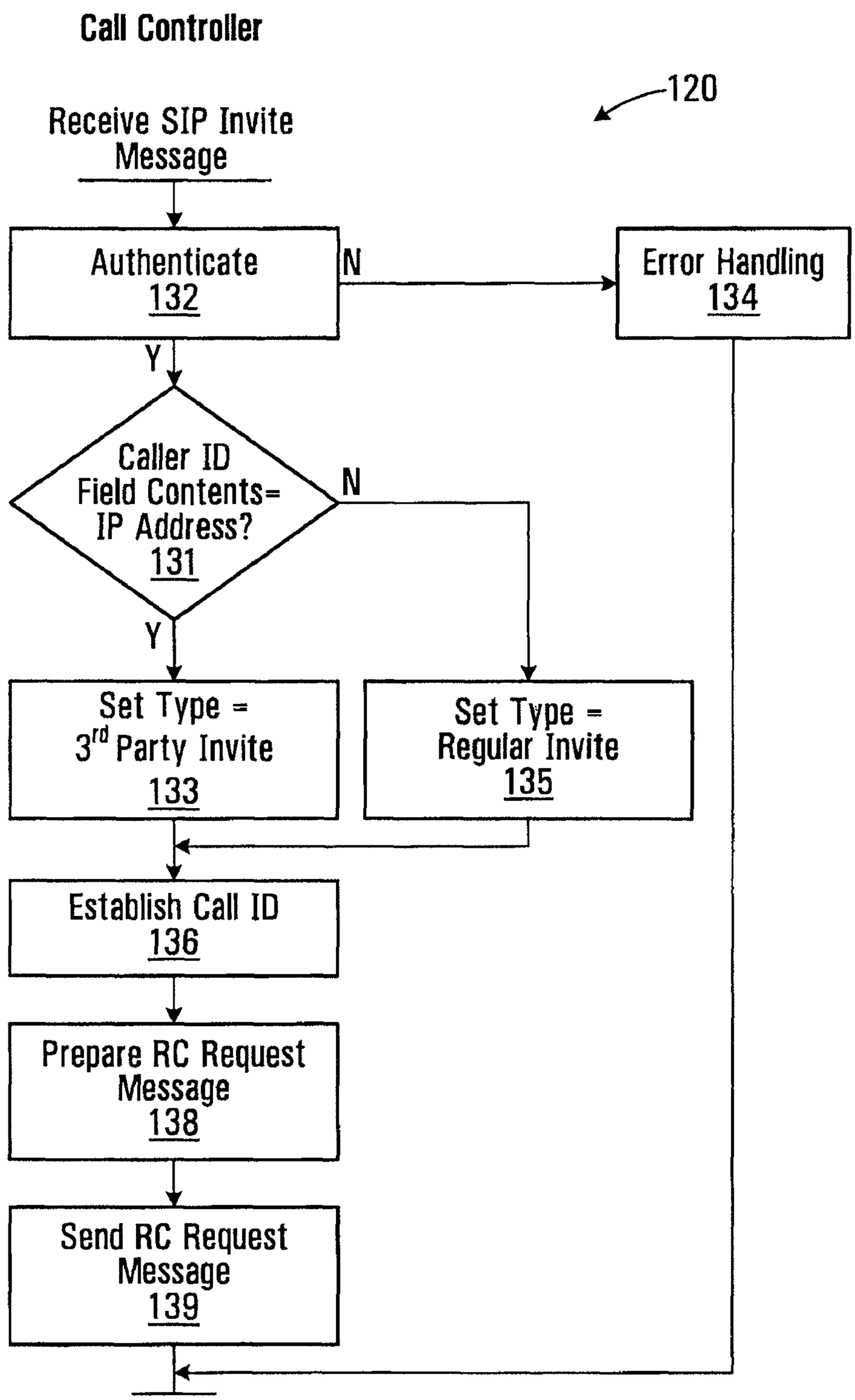
Call Controller
120
Receive SIP Invite Message
Authenticate 132
N
Error Handling 134
Y
Caller ID Field Contents= IP Address? 131
N
Y
Set Type = 3rd Party Invite 133
Set Type = Regular Invite 135
Establish Call ID 136
Prepare RC Request Message 138
Send RC Request Message 139

FIG. 5

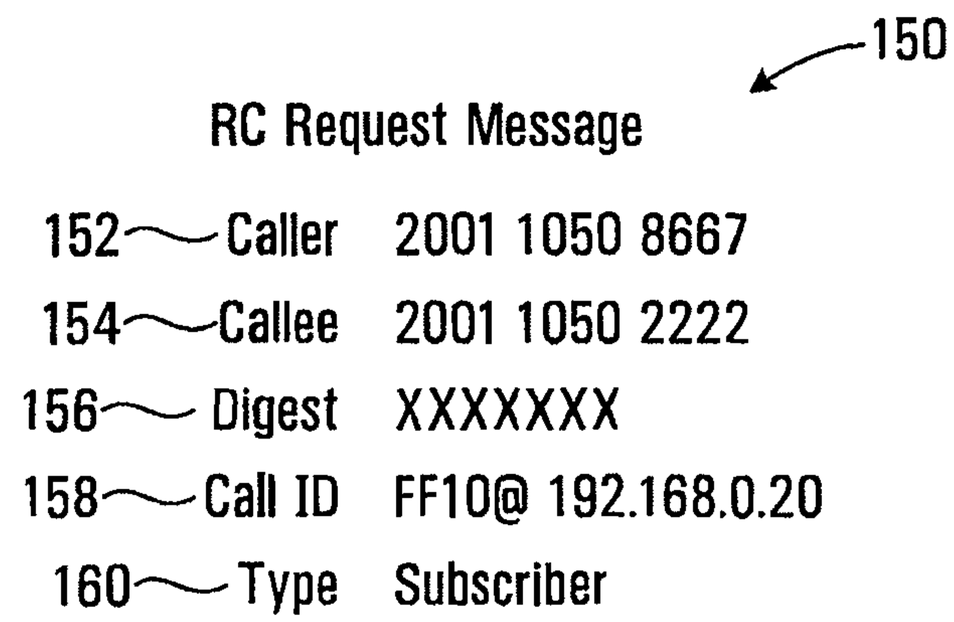
150
RC Request Message
152 Caller 2001 1050 8667
154 Callee 2001 1050 2222
156 Digest XXXXXXX
158 Call ID FF10@ 192.168.0.20
160 Type Subscriber

FIG. 6

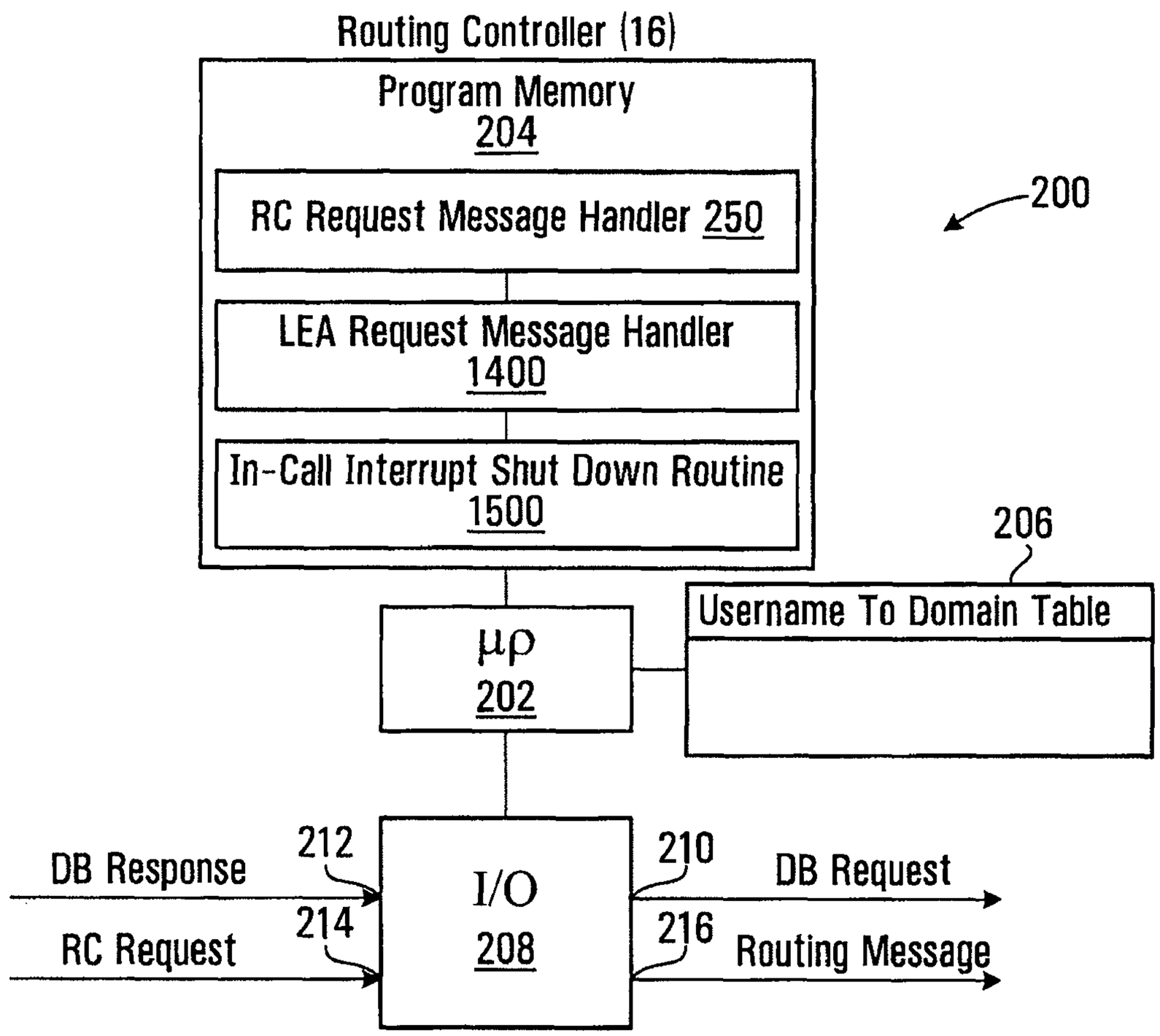
Routing Controller (16)
Program Memory
204
RC Request Message Handler 250
LEA Request Message Handler
1400
In-Call Interrupt Shut Down Routine
1500
200
206
Username To Domain Table
μp
202
DB Response
212
RC Request
214
I/O
208
210
DB Request
216
Routing Message

FIG. 7

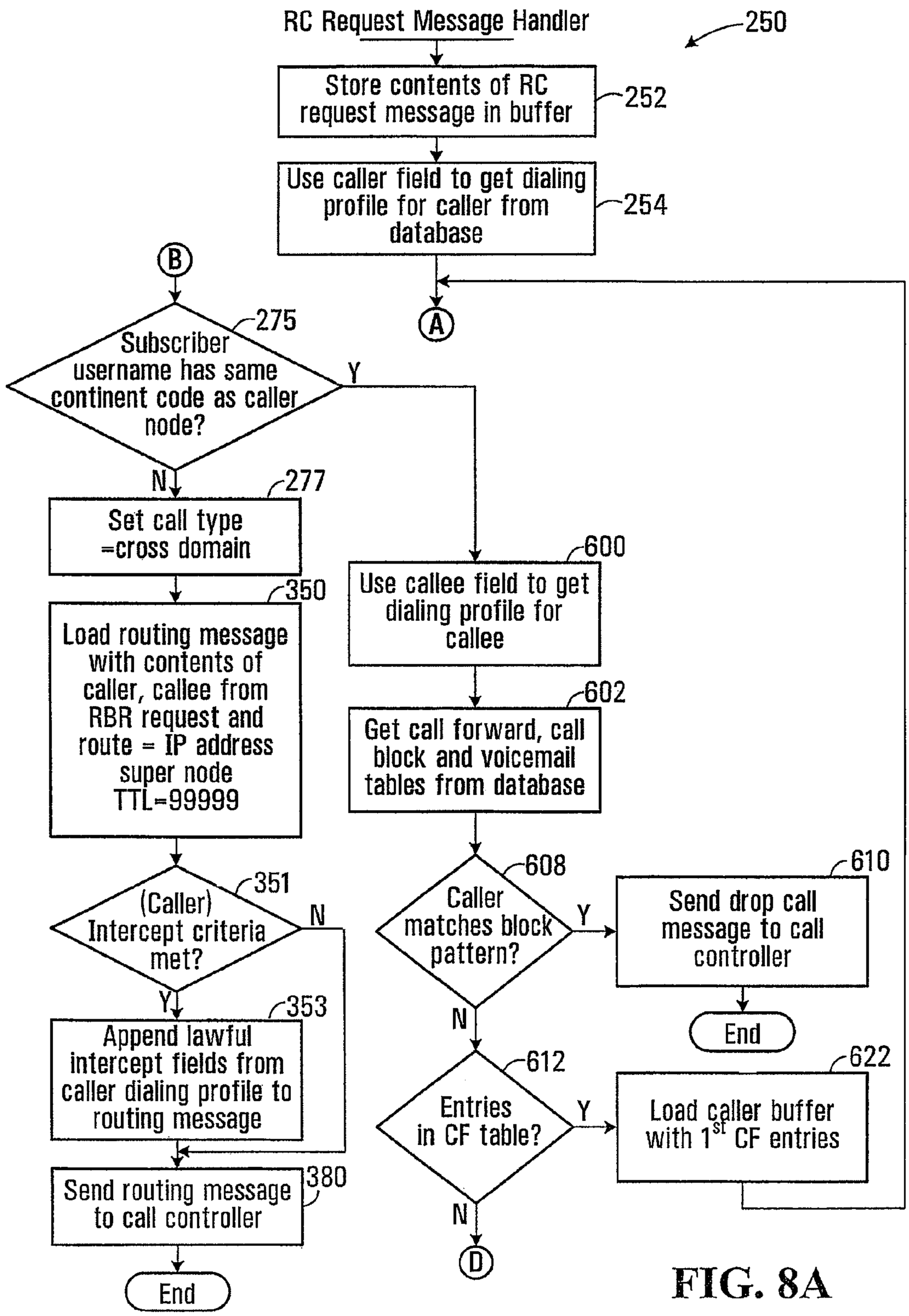
RC Request Message Handler
250
Store contents of RC request message in buffer
252
Use caller field to get dialing profile for caller from database
254
A
B
Subscriber username has same continent code as caller node?
275
Y
N
Set call type =cross domain
277
Load routing message with contents of caller, callee from RBR request and route = IP address super node TTL=99999
350
(Caller) Intercept criteria met?
351
N
Y
Append lawful intercept fields from caller dialing profile to routing message
353
Send routing message to call controller
380
End
Use callee field to get dialing profile for callee
600
Get call forward, call block and voicemail tables from database
602
Caller matches block pattern?
608
Y
N
Send drop call message to call controller
610
End
Entries in CF table?
612
Y
N
Load caller buffer with 1st CF entries
622
D

FIG. 8A

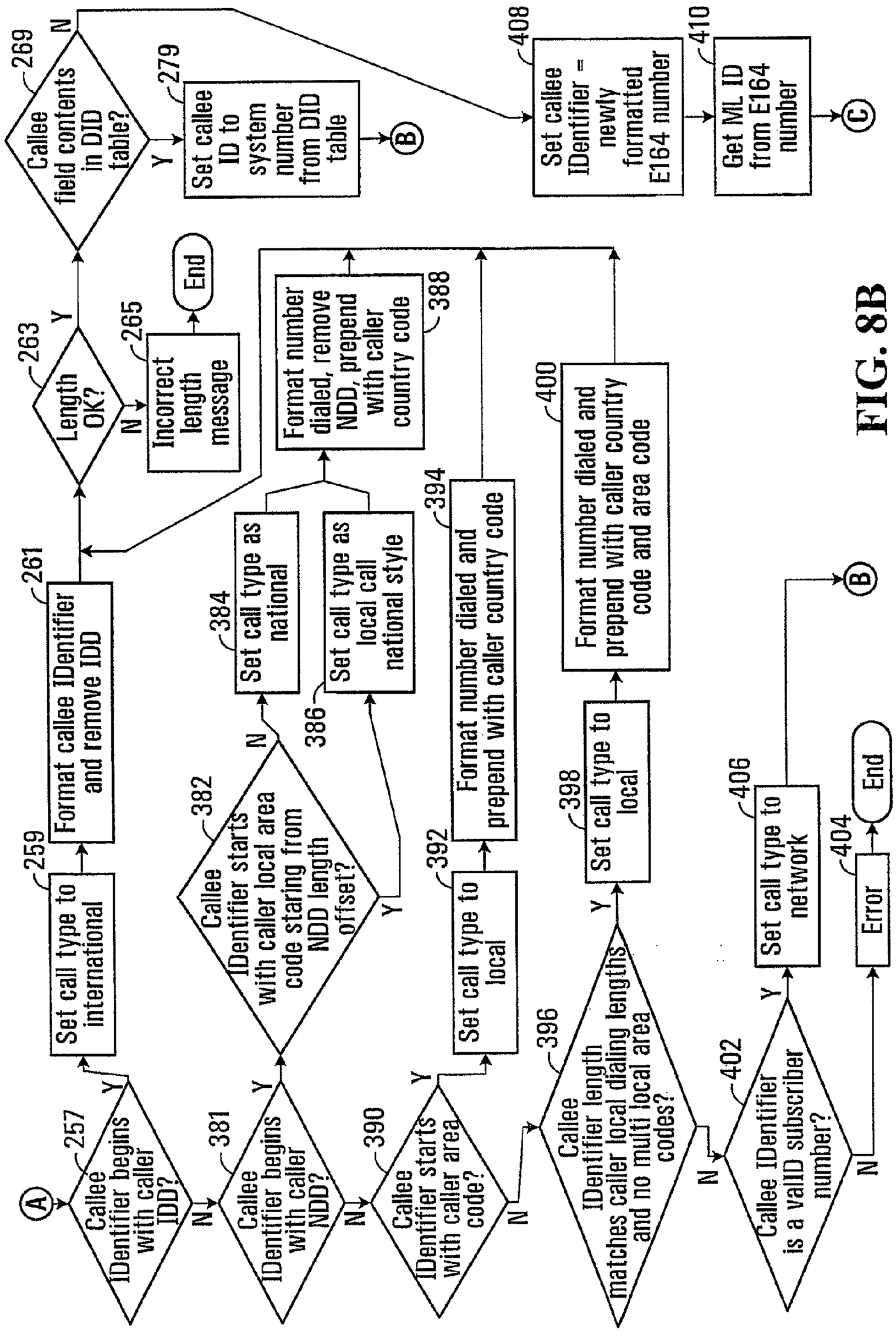
A
257
Callee IDentifier begins with caller IDD?
Y
N
259
Set call type to international
261
Format callee IDentifier and remove IDD
263
Length OK?
Y
N
265
Incorrect length message
End
269
Callee field contents in DID table?
Y
N
279
Set callee ID to system number from DID table
B
381
Callee IDentifier begins with caller NDD?
Y
N
382
Callee IDentifier starts with caller local area code staring from NDD length offset?
Y
N
384
Set call type as national
386
Set call type as local call national style
388
Format number dialed, remove NDD, prepend with caller country code
390
Callee IDentifier starts with caller area code?
Y
N
392
Set call type to local
394
Format number dialed and prepend with caller country code
396
Callee IDentifier length matches caller local dialing lengths and no multi local area codes?
Y
N
398
Set call type to local
400
Format number dialed and prepend with caller country code and area code
402
Callee IDentifier is a valID subscriber number?
Y
N
404
Error
End
406
Set call type to network
B
408
Set callee IDentifier = newly formatted E164 number
410
Get ML ID from E164 number
C

FIG. 8B

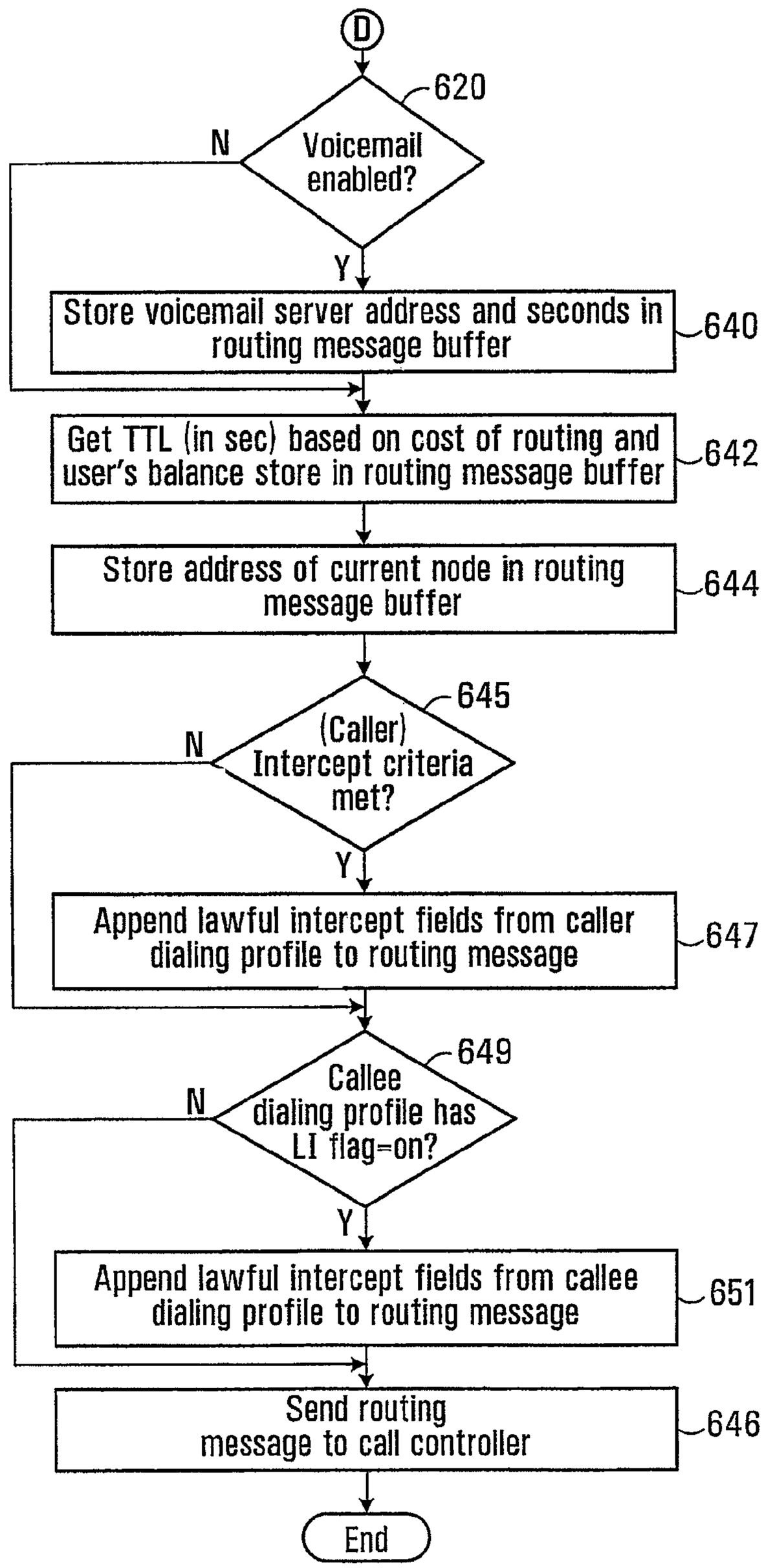
D
620
Voicemail enabled?
N
Y
Store voicemail server address and seconds in routing message buffer
640
Get TTL (in sec) based on cost of routing and user's balance store in routing message buffer
642
Store address of current node in routing message buffer
644
645
(Caller) Intercept criteria met?
N
Y
Append lawful intercept fields from caller dialing profile to routing message
647
649
Callee dialing profile has LI flag=on?
N
Y
Append lawful intercept fields from callee dialing profile to routing message
651
Send routing message to call controller
646
End

FIG. 8C

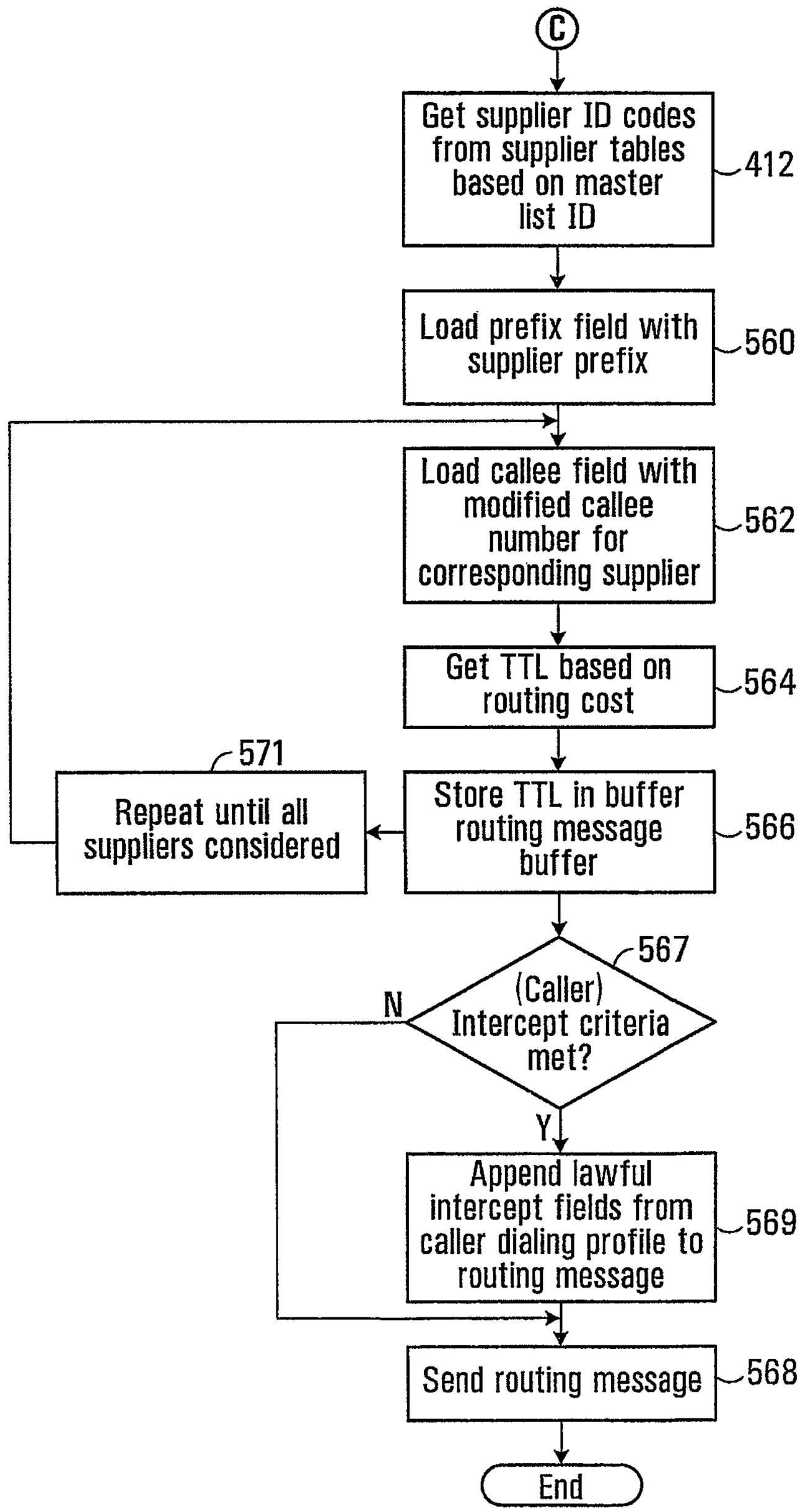
C
Get supplier ID codes from supplier tables based on master list ID
412
Load prefix field with supplier prefix
560
Load callee field with modified callee number for corresponding supplier
562
Get TTL based on routing cost
564
571
Repeat until all suppliers considered
Store TTL in buffer routing message buffer
566
567
(Caller) Intercept criteria met?
N
Y
Append lawful intercept fields from caller dialing profile to routing message
569
Send routing message
568
End

FIG. 8D

256

Dialing Profile for a User

258	Username	Assigned on Subscription
260	Domain	Domain Associated with User
262	NDD	National Dialing Digit Code
264	IDD	International Dialing Digit Code
266	Country Code	Country Dependant Code
267	Local Area Codes	Numeric
268	Caller Minimum Local Length	Numeric
270	Caller Maximum Local Length	Numeric
273	Reseller	Retailer
1150	Media Relay 1	Optional Media relay IDentifier #1
1150	Media Relay n	Optional Media relay IDentifier #2
702	LI flag	on or off
704	MD1 Address	Address of First Mediation Device
706	Warrant ID	From Law Enforcement Agency
708	LI-Start Date/Time	When to Begin Monitoring Period
710	LI-Stop Date/Time	When to End Monitoring Period

FIG. 9

Dialing Profile for Vancouver Subscriber

276

258	Username	2001 1050 8667 (61, 63, 70, 74)	
260	Domain	sp yvr digifonica com (284, 286, 288, 290)	282
262	NDD	1	
264	IDD	011	
266	Country Code	1	
267	Local Area Codes	604;778 (Vancouver)	
268	Caller Minimum Local Length	10	
270	Caller Maximum Local Length	10	
273	Reseller	Klondike	
	MR 1	192.168.1.10	
	⋮		
	MR N	192.168.2.59	

FIG. 10

Dialing Profile for Calgary Subscriber

Username	2001 1050 2222
Domain	sp.yvr.digifonica.com
NDD	1
IDD	011
Country Code	1
Local Area Codes	403 (Calgary)
Caller Minimum Local Length	7
Caller Maximum Local Length	10
Reseller	ABC
MR1	192.168.3.60
⋮	
MRn	192.168.4.69

FIG. 11

Dialing Profile for London Subscriber

Username	4401 1062 4444
Domain	sp.lhr.digifonica.com
NDD	0
IDD	00
Country Code	44
Local Area Codes	20 (London)
Caller Minimum Local Length	10
Caller Maximum Local Length	11
Reseller	DEF
MR1	192.168.5.70
⋮	
MRn	192.168.6.79

FIG. 12

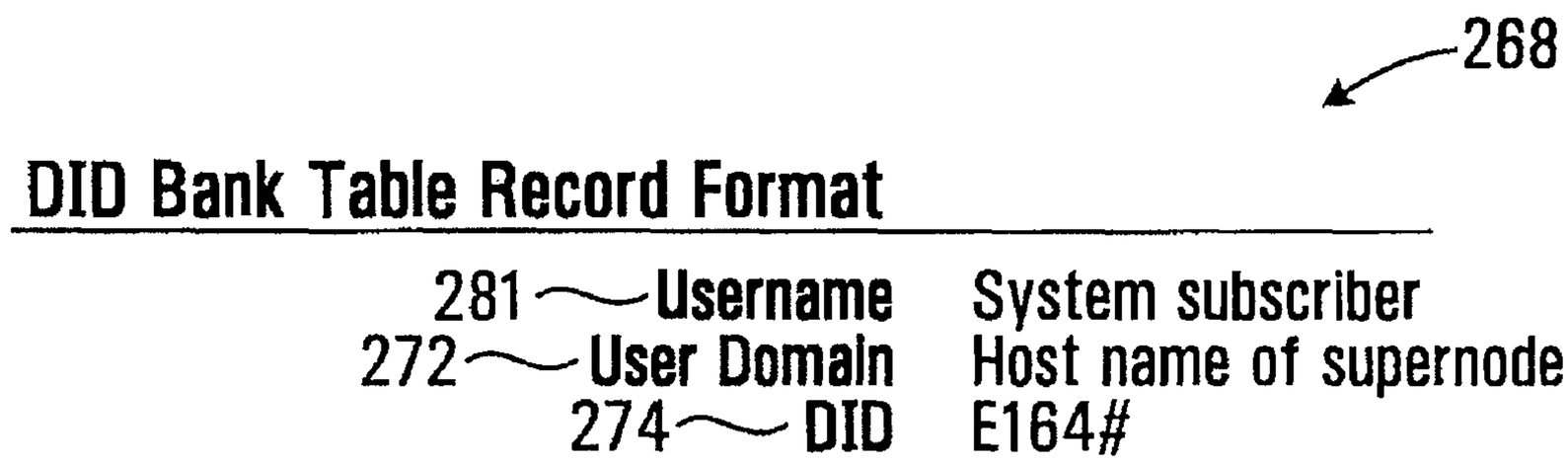
268
DID Bank Table Record Format
281 Username System subscriber
272 User Domain Host name of supernode
274 DID E164#

FIG. 13

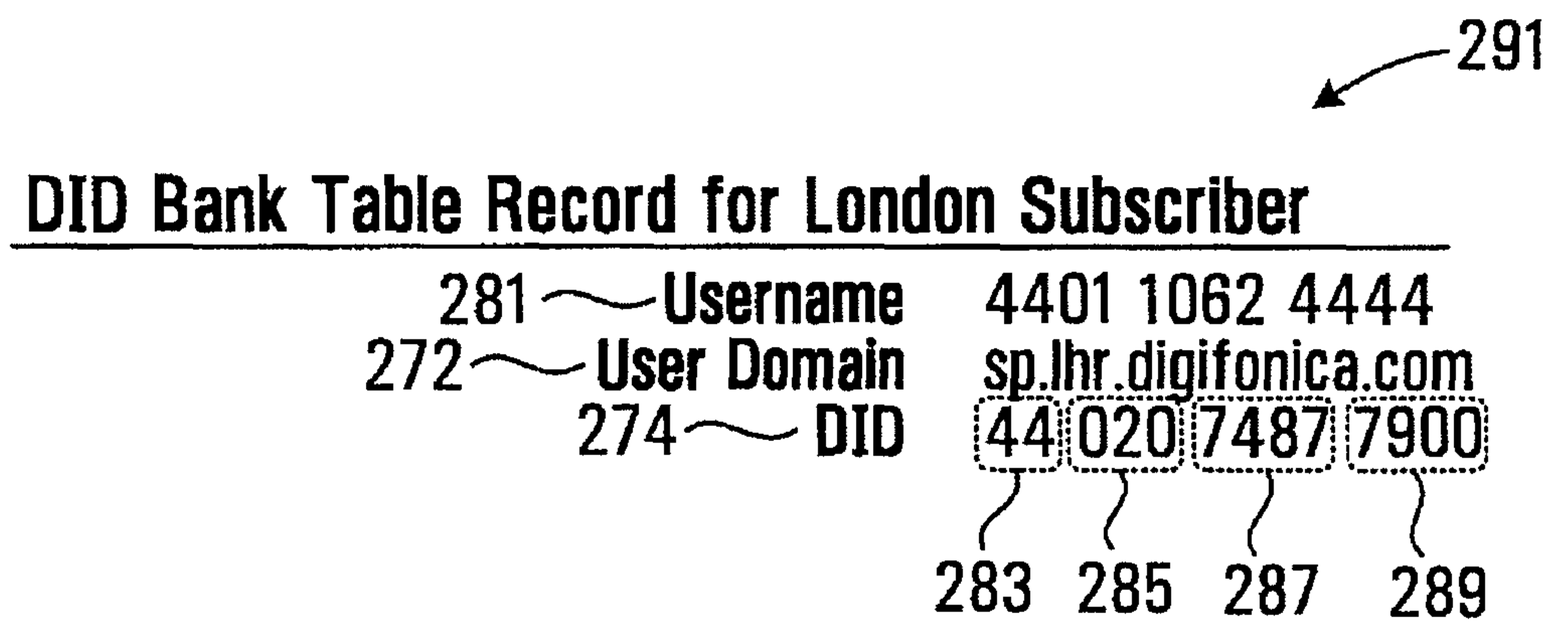
291
DID Bank Table Record for London Subscriber
281 Username 4401 1062 4444
272 User Domain sp.lhr.digifonica.com
274 DID 44 020 7487 7900
283 285 287 289

FIG. 14

352

Routing Message Format

354	Supplier Prefix (optional)	Code identifying supplier traffic
356	Delimiter	Symbol separating fields
358	Callee	PSTN compatible number or Digifonica number
360	Route	Domain name and IP address
362	Time to Live(TTL)	In seconds
364	Other	TBD

FIG. 15

366

Routing Message - Different Node

440110624444@sp.lhr.digifonica.com;ttl=9999

358 360 362

1152 Media Relays (optional)

FIG. 16

Routing Message - Different Node with lawful intercept fields

440110624444@sp.lhr.digifonica.com;ttl=999;LIflag=on;MDaddress=192.168.1.10;
WarrantID=20060515142;
LIstart=2006 05 16 00:00:00
LIstop=2006 12 31 23:59:59;
1152 Media Relays (optional)

FIG. 16A

370

Prefix to Supernode Table Record Format

372	Prefix	First n digits of callee identifier
374	Supernode Address	IP address or fully qualified domain name

FIG. 17

Prefix to Supernode Table Record for London Subscriber

Prefix	4
Supernode Address	sp.lhr.digifonica.com

FIG. 18

Master List Record Format

500	ml_ID	1019
502	Dialing code	1604
504	Country code	The country code is the national prefix to be used when dialing TO a particular country FROM another country.
506	Nat Sign #(Area Code)	Numeric
508	Min Length	Numeric
510	Max Length	Numeric
512	NDD	The NDD prefix is the access code used to make a call **WITHIN** that country from on city to another (when calling another city in the same vicinity, this may not be necessary).
514	IDD	The **IDD prefix** is the international prefix needed to dial a call **FROM** the country listed TO another country.
516	Buffer rate	Safe charge rate above the highest rate charged by suppliers

FIG. 19

Example: Master List Record with Populated Fields

Route_ID	1019
Dialing code	1604
Country code	1
Nat Sign #(Area Code)	604
Min Length	7
Max Length	7
NDD	1
IDD	011
Buffer rate	$0.009/min

FIG. 20

Suppliers List Record Format

540	Sup_ID	Name code
542	Route_ID	Numeric code
544	Prefix (optional)	String identifying supplier's traffic #
546	Route	IP address
548	NDD/IDD rewrite	
550	Rate	Cost per second to Digifonica to use this route

FIG. 21

Telus Supplier Record

	Sup_ID	2010 (Telus)
	Route_ID	1019
	Prefix (optional)	4973#
546	Route	72.64.39.58
	NDD/IDD rewrite	011
550	Rate	$0.02/min

FIG. 22

Shaw Supplier Record

	Sup_ID	2011 (Shaw)
	Route_ID	1019
	Prefix (optional)	4974#
	Route	73.65.40.59
	NDD/IDD rewrite	011
550	Rate	$0.025/min

FIG. 23

Sprint Supplier Record

	Sup_ID	2012 (Sprint)
	Route_ID	1019
	Prefix (optional)	4975#
	Route	74.66.41.60
	NDD/IDD rewrite	011
550	Rate	$0.03/min

FIG. 24

Routing Message Buffer for Gateway Call

4973#0116048675309@72.64.39.58;ttl=3600 ~ 570
4974#0116048675309@73.65.40.59;ttl=3600 ~ 572
4975#0116048675309@74.66.41.60;ttl=3600 ~ 574
Media Relays (optional) ~ 1152

FIG. 25

Routing Message Buffer for Gateway Call with Lawful Intercept Fields

4973#0116048675309@72.64.39.58;ttl=3600
4974#0116048675309@73.65.40.59;ttl=3600
4975#0116048675309@74.66.41.60;ttl=3600
LIflag=on;MDaddress=192.168.1.10;WarrantID=20060515142;
LIstart=2006051600:00:00;LIstop=2006123123:59:59
Media Relays (optional) ~ 1152

FIG. 25A

Call Block Record Format

604 ~	Username	Digifonica #
606 ~	Block Pattern	PSTN compatible or Digifonica #

FIG. 26

Call Block Record for Calgary Callee

604 ~	Username of Callee	2001 1050 2222
606 ~	Block Pattern	2001 1050 8664

FIG. 27

Call Forwarding Record Format for Callee

614 ~	Username of Callee	Digifonica #
616 ~	Destination Number	Digifonica #
618 ~	Sequence Number	Integer indicating order to try this

FIG. 28

Call Forwarding Table Record for Calgary Callee

614	Username of Callee	2001 1050 2222
616	Destination Number	2001 1055 2223
618	Sequence Number	1

FIG. 29

Voicemail Table Record Format

624	Username of Callee	Digifonica #
626	Vm Server	domain name
628	Seconds to Voicemail	time to wait before engaging voicemail
630	Enabled	yes/no

FIG. 30

Voicemail Table Record for Calgary Callee

624	Username of Callee	2001 1050 2222
626	Vm Server	vm.yvr.digifonica.com
628	Seconds to Voicemail	20
630	Enabled	1

FIG. 31

Routing Message Buffer for CF/VM Routing Message

650 ~ 200110502222@sp.yvr.digifonica.com;ttl=3600
652 ~ 200110552223@sp.yvr.digifonica.com;ttl=3600
654 ~ vm.yvr.digifonica.com;20;ttl=60
656 ~ sp.yvr.digifonica.com
1152 ~ Media Relays (optional)

FIG. 32

Routing Message Buffer for CF/VM Routing Message with Caller Lawful Intercept Fields

200110502222@sp.yvr.digifonica.com;ttl=3600
200110552223@sp.yvr.digifonica.com;ttl=3600
vm.yvr.digifonica.com;20;ttl=60
sp.yvr.digifonica.com
LIflag=on;MDaddress=192.168.1.10;WarrantID=20060615142;
LIstart=2006061500:00:00;LIstop=2006123123:59:59
Media Relays (optional) ~ 1152

FIG. 32A

Routing Message Buffer for CF/VM Routing Message with Caller and Callee Lawful Intercept Fields

200110502222@sp.yvr.digifonica.com;ttl=3600
200110552223@sp.yvr.digifonica.com;ttl=3600
vm.yvr.digifonica.com;20;ttl=60
sp.yvr.digifonica.com
LI1flag=on;Mdaddress=192.168.1.10;WarrantID=20060515142;
LI1start=2006051600:00:00;LI1stop=2006123123:59:59
LI2flag=0;MD2address=192.168.1.20;WarrantID=20060615142;
LI2start=2006061500:00:00;LI2stop=2006123123:59:59
Media Relays (optional) ~ 1152

FIG. 32B

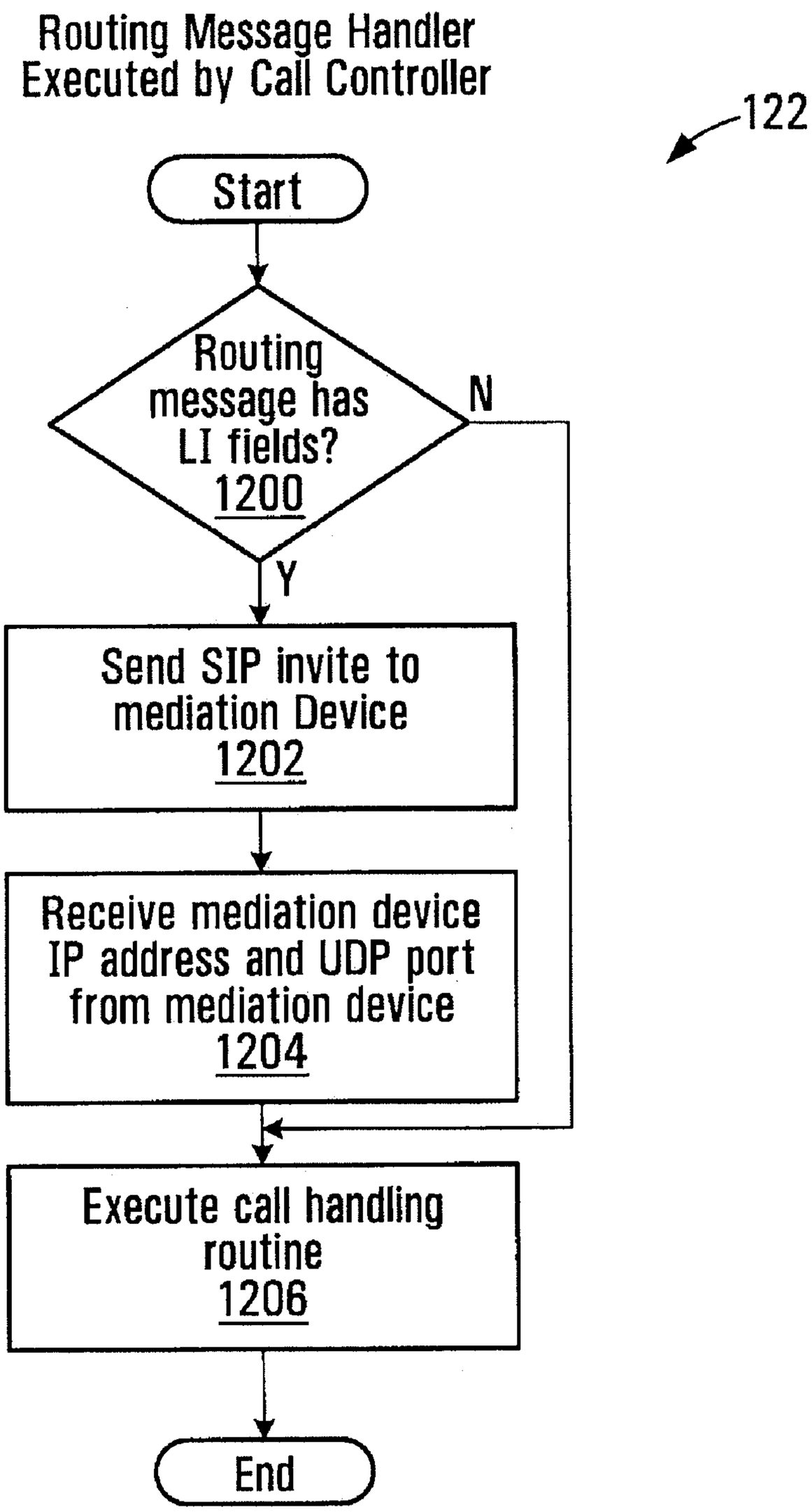
Routing Message Handler
Executed by Call Controller
122
Start
Routing message has LI fields? 1200
N
Y
Send SIP invite to mediation Device 1202
Receive mediation device IP address and UDP port from mediation device 1204
Execute call handling routine 1206
End

FIG. 33

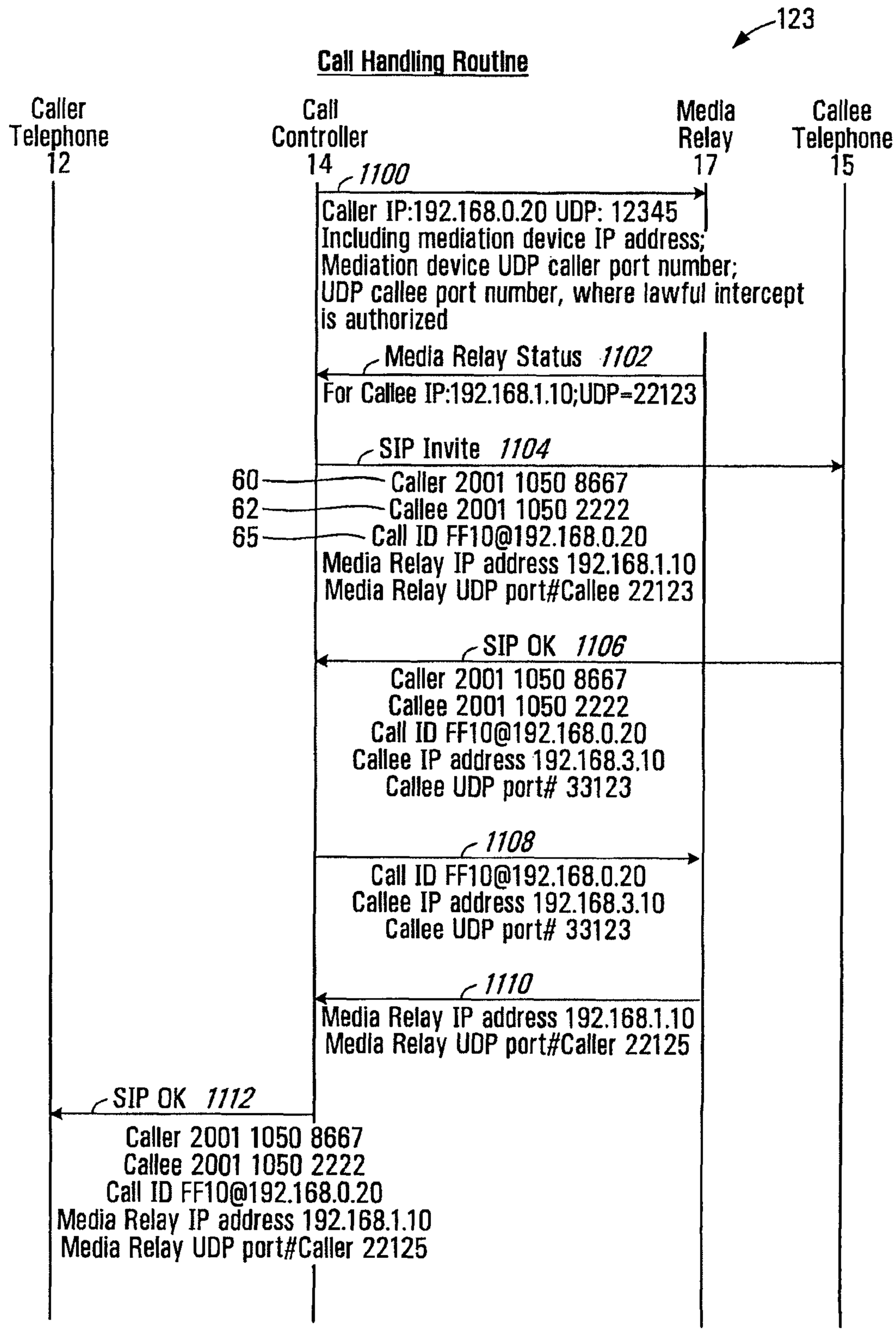
123
Call Handling Routine
Caller Telephone 12
Call Controller 14
Media Relay 17
Callee Telephone 15
1100
Caller IP:192.168.0.20 UDP: 12345
Including mediation device IP address;
Mediation device UDP caller port number;
UDP callee port number, where lawful intercept is authorized
Media Relay Status 1102
For Callee IP:192.168.1.10;UDP=22123
SIP Invite 1104
60
Caller 2001 1050 8667
62
Callee 2001 1050 2222
65
Call ID FF10@192.168.0.20
Media Relay IP address 192.168.1.10
Media Relay UDP port#Callee 22123
SIP OK 1106
Caller 2001 1050 8667
Callee 2001 1050 2222
Call ID FF10@192.168.0.20
Callee IP address 192.168.3.10
Callee UDP port# 33123
1108
Call ID FF10@192.168.0.20
Callee IP address 192.168.3.10
Callee UDP port# 33123
1110
Media Relay IP address 192.168.1.10
Media Relay UDP port#Caller 22125
SIP OK 1112
Caller 2001 1050 8667
Callee 2001 1050 2222
Call ID FF10@192.168.0.20
Media Relay IP address 192.168.1.10
Media Relay UDP port#Caller 22125

FIG. 34

Call Controller Active Call Record

1300	Call ID	FF10@192.168.0.20
1302	Caller IP Address	192.168.0.20
1304	Caller Port	12345
1306	Callee IP Address	192.168.3.10
1308	Callee Port	33123
1310	Media Relay ID	42
1312	Media Relay Caller Port	22125
1314	Media Relay Callee Port	22123

FIG. 35

Routing Controller Active Call Record

1316	Call ID	FF10@192.168.0.20
1318	Caller	2001 1050 8667
1320	Callee	2001 1050 2222
1322	Call Controller ID	61

FIG. 36

Message from Call Controller to Mediation Device - SIP Invite

1020	Caller	2001 1050 8667
1022	Callee	2001 1050 2222
1024	Call ID	FF10@192.168.0.20
1026	Warrant ID	12345678
1028	Intercept Related Info	XXXXXXXX

FIG. 37

Reply Message from Mediation Device - SIP Ok

1040	Caller	2001 1050 8667
1042	Callee	2001 1050 2222
1044	Call ID	FF10@192.168.0.20
1046	Mediation Device IP Address	192.138.2.10
1048	Mediation Device UDP Port # Caller	13678
1050	Mediation Device UDP Port # Callee	13679

FIG. 38

900

SIP Bye Message

902	Caller	Username
904	Callee	PSTN compatible # or Username
906	Call ID	unique call identifier (hexadecimal string@IP))

FIG. 39

908

SIP Bye Message

902	Caller	2001 1050 8667
904	Callee	2001 1050 2222
906	Call ID	FA10@192.168.0.20

FIG. 40

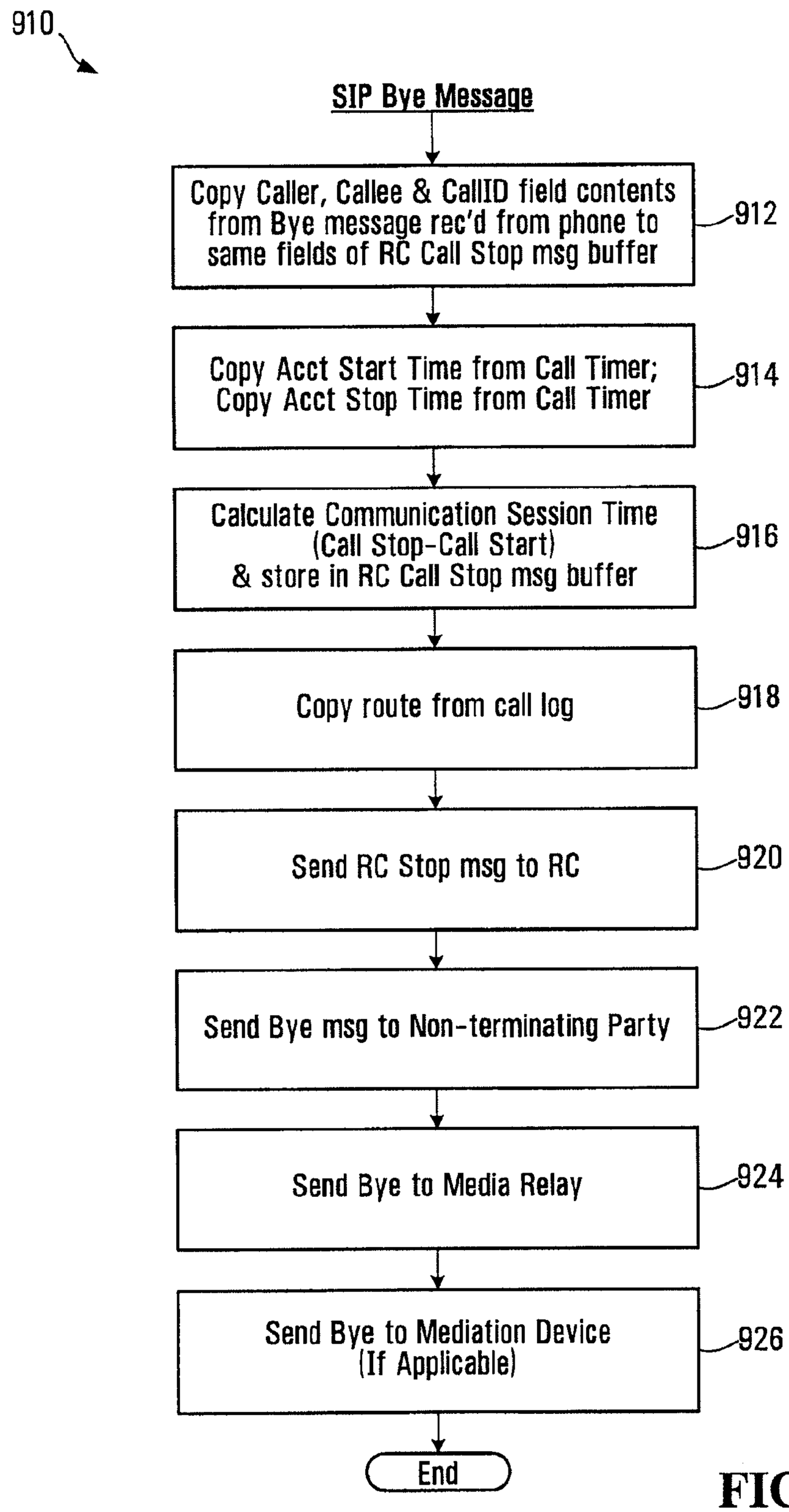
910
SIP Bye Message
Copy Caller, Callee & CallID field contents from Bye message rec'd from phone to same fields of RC Call Stop msg buffer
912
Copy Acct Start Time from Call Timer; Copy Acct Stop Time from Call Timer
914
Calculate Communication Session Time (Call Stop-Call Start) & store in RC Call Stop msg buffer
916
Copy route from call log
918
Send RC Stop msg to RC
920
Send Bye msg to Non-terminating Party
922
Send Bye to Media Relay
924
Send Bye to Mediation Device (If Applicable)
926
End

FIG. 41

1000

RC Call Stop Message

1002	Caller	Username
1004	Callee	PSTN compatible # or Username
1006	Call ID	unique call identifier (hexadecimal string@IP)
1008	Acct Start Time	start time of call
1010	Acct Stop Time	time the call ended
1012	Acct Session Time	start time-stop time (in seconds)
1014	Route	IP address for gateway, where a gateway is used

FIG. 42

1021

RC Call Stop Message for Calgary Callee

1002	Caller	2001 1050 8667
1004	Callee	2001 1050 2222
1006	Call ID	FA10@192.168.0.20
1008	Acct Start Time	2006-12-30 12:12:12
1010	Acct Stop Time	2006-12-30 12:12:14
1012	Acct Session Time	2
1014	Route	(72.64.39.58 if Telus gateway is used)

FIG. 43

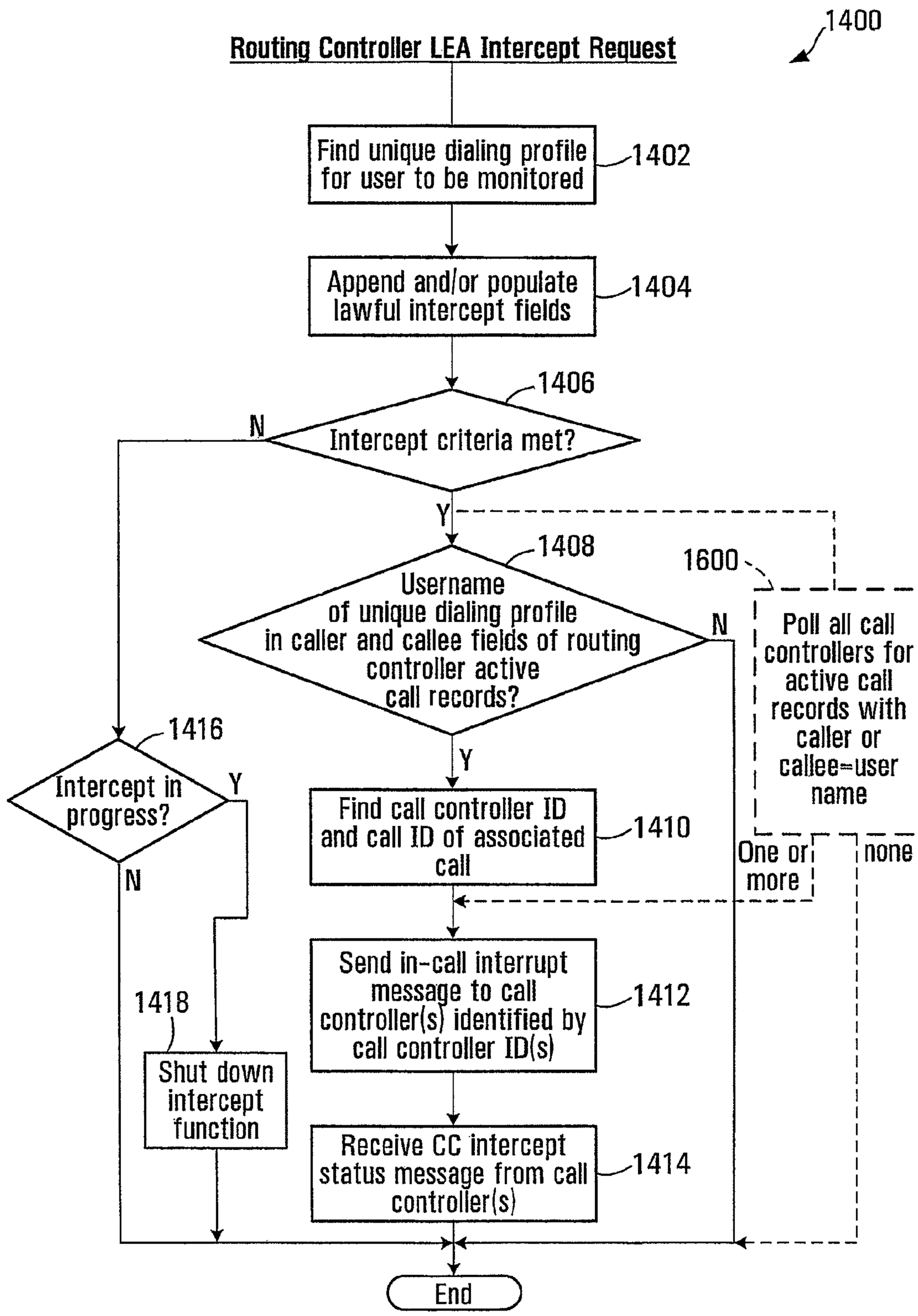
1400
Routing Controller LEA Intercept Request
Find unique dialing profile for user to be monitored
1402
Append and/or populate lawful intercept fields
1404
1406
Intercept criteria met?
N
Y
1408
Username of unique dialing profile in caller and callee fields of routing controller active call records?
N
Y
1600
Poll all call controllers for active call records with caller or callee=user name
One or more
none
1416
Intercept in progress?
Y
N
Find call controller ID and call ID of associated call
1410
Send in-call interrupt message to call controller(s) identified by call controller ID(s)
1412
1418
Shut down intercept function
Receive CC intercept status message from call controller(s)
1414
End

FIG. 44

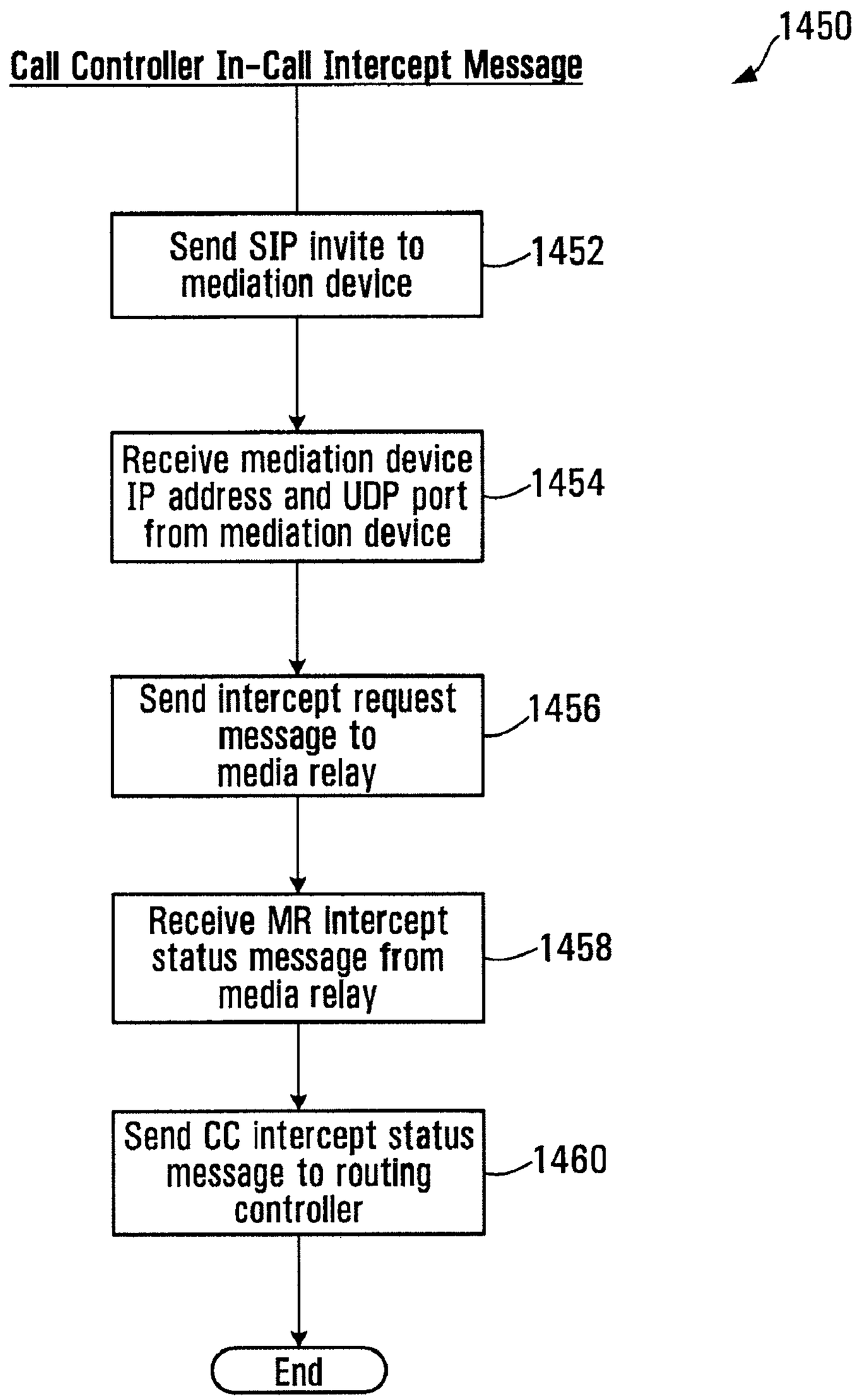
1450
Call Controller In-Call Intercept Message
Send SIP invite to mediation device
1452
Receive mediation device IP address and UDP port from mediation device
1454
Send intercept request message to media relay
1456
Receive MR intercept status message from media relay
1458
Send CC intercept status message to routing controller
1460
End

FIG. 45

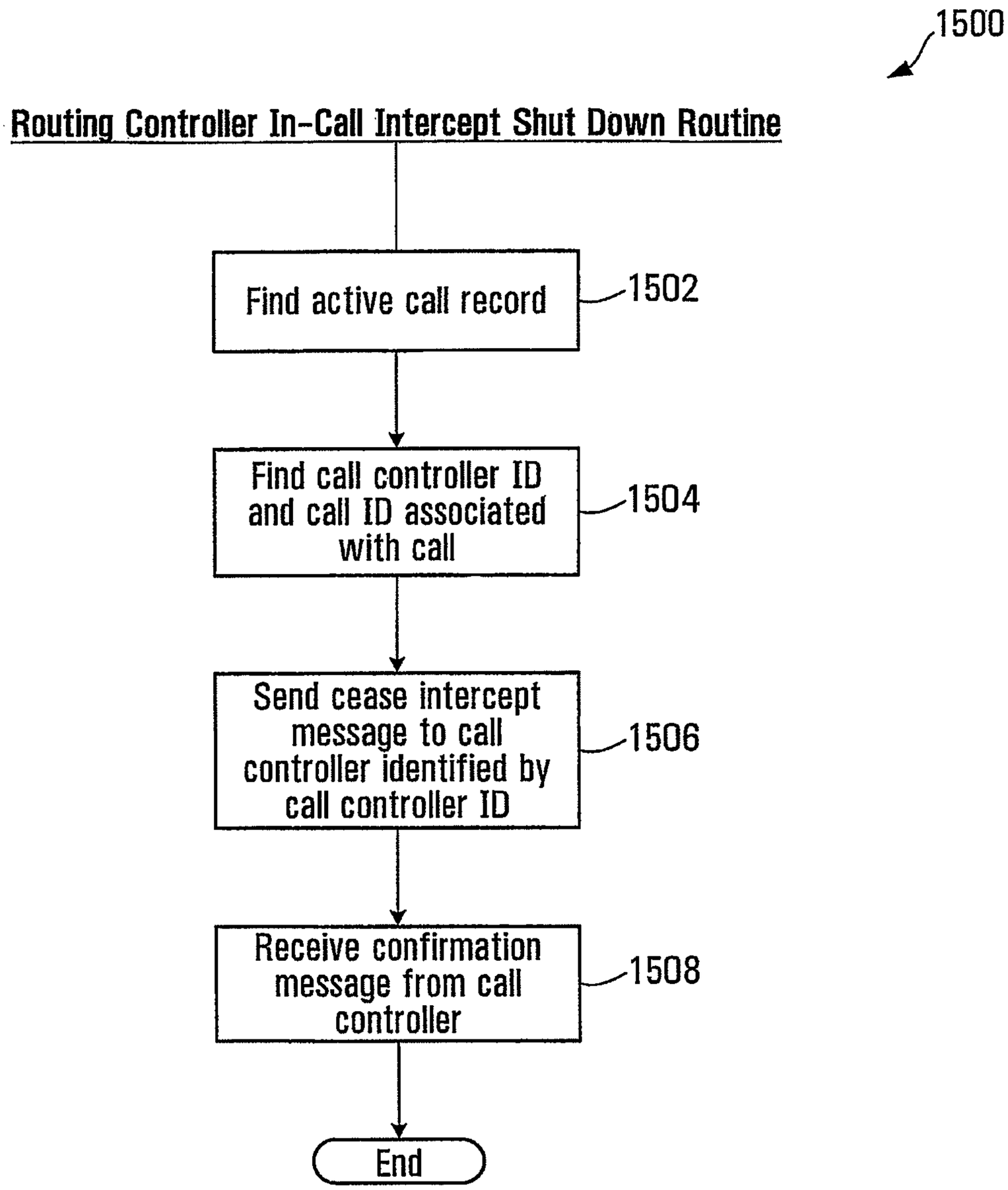
1500
Routing Controller In-Call Intercept Shut Down Routine
Find active call record
1502
Find call controller ID and call ID associated with call
1504
Send cease intercept message to call controller identified by call controller ID
1506
Receive confirmation message from call controller
1508
End

FIG. 46

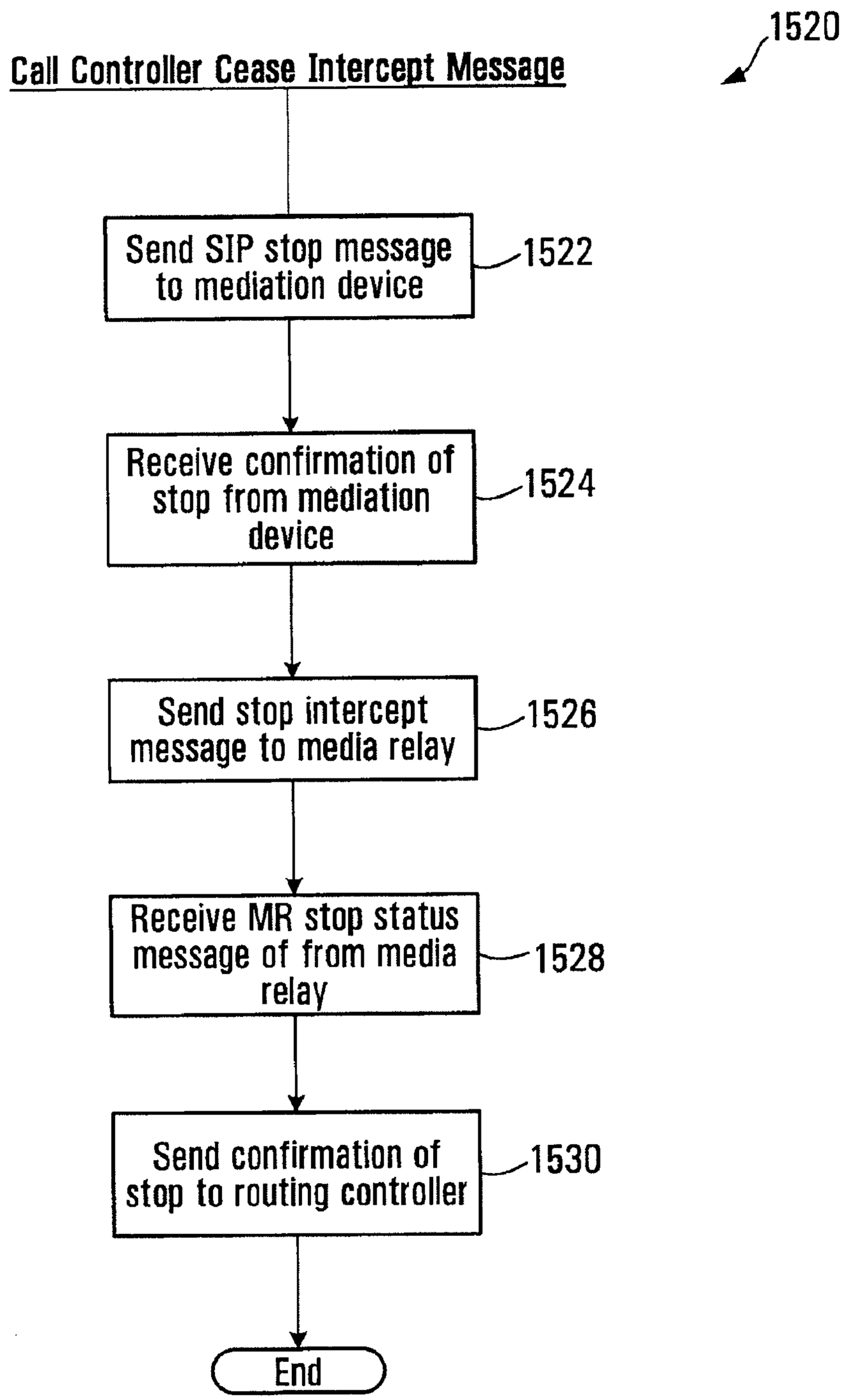
1520
Call Controller Cease Intercept Message
Send SIP stop message to mediation device
1522
Receive confirmation of stop from mediation device
1524
Send stop intercept message to media relay
1526
Receive MR stop status message of from media relay
1528
Send confirmation of stop to routing controller
1530
End

FIG. 47

INTERCEPTING VOICE OVER IP COMMUNICATIONS AND OTHER DATA COMMUNICATIONS

INCORPORATION BY REFERENCE TO ANY PRIORITY APPLICATIONS

Any and all applications for which a foreign or domestic priority claim is identified in the Application Data Sheet as filed with the present application are hereby incorporated by reference under 37 CFR **1.57**. This application is a continuation of U.S. patent application Ser. No. 12/517,026, filed Mar. 5, 2010, which is a national phase entry of PCT/CA2007/002150, filed Nov. 29, 2007, which claims the benefit of U.S. Provisional Application No. 60/861,431 filed on Nov. 29, 2006.

BACKGROUND

1. Field

This development relates to data communications and methods and apparatus for intercepting data communications, particularly voice over IP data communications, in an IP network.

2. Description of the Related Art

The term "lawful intercept" is used to describe a procedure which allows law enforcement agencies to perform electronic surveillance of telecommunications. Lawful intercept of telecommunications, particularly phone calls, is premised on a notion that a law enforcement agency has identified a person of interest, obtained a legal authorization for the surveillance (for example, a judicial or administrative warrant), and then contacted the person's telecommunications service provider that will be required to provide the law enforcement agency with a real-time copy of the person's communications. This real-time copy can then be used by the law enforcement agency to monitor or record the person's communications. Within the framework of traditional telecommunications networks, such as, for example, the Public Switched Telephone Network (PSTN) or cellular networks, lawful intercept generally presents a purely economic problem for the service providers that have to ensure that sufficient interception equipment and dedicated links to the law enforcement agencies have been deployed to satisfy lawful intercept requirements mandated by law. However, in the context of Voice over Internet Protocol (VoIP) communications, in addition to the economic problems mentioned above, lawful intercept presents significant technological challenges which often makes compliance with legally mandated lawful intercept requirements exceedingly difficult.

The problem lies in the very nature of the VoIP technology and the Internet Protocol (IP) networks (for example, the Internet) that underlie it.

Traditional telecommunications networks are "connection-oriented" or "circuit-switched". Communications over such networks occur via dedicated "circuits". Although the networks typically comprise a plurality of available parallel paths, when a circuit is established, only a single one of the available paths is picked. In situations where a circuit has failure protection, a redundant path, also determined at the time of the circuit establishment, can also be reserved. Once the circuit is established, all communications traverse from end to end. Interception of such communications is easy as the service provider can "tap" the circuit at any point in the network that is under its lawful control.

In contrast to circuit-switched networks, IP-based networks are "connectionless" by design. A connectionless IP network essentially comprises a plurality of interconnected network devices (routers) which establish a plurality of paths from any point on the network to any other point. Information that needs to traverse an IP network is divided into small "packets", each one comprising an IP header containing source and destination addressing information, and service flags; and user payload. The specific path that each packet in a communication between parties takes across an IP network is not determined in advance such as in a circuit-switched network. The path is defined on a hop-by-hop basis (router-by-router), each router at which the packet arrives examines the source and destination addresses contained in the IP header and applies a number of service variables such as hop-count (number of routers between the current router and the destination), latency and bandwidth of available links, and administrative considerations such as inter-provider agreements, to determine the next hop to which the packet will be forwarded. Because the service variables change dynamically, for example in response to a failure of a link in the network, the available paths may change significantly and it is impossible to reliably predict the path or paths that the packets that comprise a specific a specific communication will traverse. Furthermore, it is not even possible to predict the order in which the packets will arrive at their destination as the different paths taken may have different latency. While the plurality of available paths and out-of-order arrivals present no problems to IP-based applications that usually keep track of the packet sequence to reassemble the communication, the same factors present formidable problems for the lawful intercept of communication over IP networks, particularly lawful intercept of VoIP calls.

The problem of lawful intercept in VoIP systems is further exacerbated by the distributed technologies often utilized in such systems. While a VoIP caller typically communicates with a VoIP call controller to facilitate the connection to the VoIP callee, the actual communication between the parties typically occurs by establishing a direct IP connection between them using the User Datagram Protocol (UDP) to encapsulate audio information into IP packets. These packets may take any available path across the IP network as described above. Even if a service provider could place an interception device at every point in the network through which a subscriber's packet could traverse, in order to provide a useful copy of the communication to a law enforcement agency, the service provider would have to reassemble all of the intercepted packets at a single device and only then pass the result to the law enforcement agency. In essence, the service provider would have to mirror the functions of the callee VoIP telephone, except the packets that comprise the communication would have to be collected from multiple points in the network. The technological challenges and economic costs associated with this proposition have thus far resulted in lack of meaningful lawful intercept capabilities in VoIP systems.

SUMMARY

In accordance with one aspect, there is provided a method for intercepting communications in an Internet Protocol (IP) network. The method involves maintaining dialing profiles for respective subscribers to the IP network, each dialing profile including a username associated with the corresponding subscriber. The method also involves associating intercept information with the dialing profile of a subscriber whose communications are to be monitored, the intercept information including determination information for determining whether to intercept a communication involving the

subscriber, and destination information identifying a device to which intercepted communications involving the subscriber are to be sent. The method further involves, when the determination information meets intercept criteria, communicating with a media relay through which the communications involving the subscriber will be conducted or are being conducted to cause the media relay to send a copy of the communications to a mediation device specified by the destination information.

Associating intercept information may involve associating the intercept information with the dialing profile when communications involving the subscriber are not in progress.

Associating intercept information may involve associating the intercept information when communications involving the subscriber are in progress.

Associating the intercept information may involve populating intercept information fields in the dialing profile of the subscriber whose communications are to be monitored.

The method may involve producing a routing message for routing communications involving the subscriber through components of the IP network and determining whether the determination information meets the intercept criteria prior to producing the routing message and including at least some of the intercept information in the routing message when the determination information meets the intercept criteria.

Determining whether the determination information meets the intercept criteria may involve determining whether a current date and time is within a range specified by the determination information.

The method may involve identifying a media relay through which communications involving the subscriber will be conducted in response to the routing message.

The method may involve pre-associating at least one media relay with the dialing profile of the subscriber whose communications are to be monitored and identifying the media relay may involve identifying the media relay pre-associated with the subscriber whose communications are to be monitored.

Pre-associating may involve populating media relay fields in the dialing profile with an identification of at least one media relay.

The intercept information may be associated with the dialing profile of the subscriber whose communications are to be monitored, in response to receipt of an intercept request message, and the intercept request message may include the intercept information.

The method may involve invoking an intercept request message handler to find a dialing profile associated with the subscriber whose communications are to be monitored, and to perform the step of associating the intercept information with the dialing profile, and to determine whether the intercept criteria are met, and identify a media relay through which the communications are being conducted.

The method may involve maintaining active call records for communications in progress, and the active call records may include a username identifier and a media relay identifier identifying the media relay through which the communications are being conducted and identifying a media relay through which the communications are being conducted may involve locating an active call record associated with communications of the subscriber whose communication are to be monitored to find the media relay associated with the communications.

The method may involve maintaining direct-inward-dialing (DID) records associating PST telephone numbers with usernames of users subscribing to the IP network, and finding a dialing profile associated with the subscriber whose communications are to be monitored may involve finding a username in a DID record bearing a PSTN number associated with the subscriber whose communications are to be monitored. The username may be used to locate a dialing profile associated with the username.

In accordance with another aspect, there is provided an apparatus for intercepting communications in an Internet Protocol (IP) network. The apparatus includes provisions for maintaining dialing profiles for respective subscribers to the IP network, each dialing profile including a username associated with the corresponding subscriber. The apparatus also includes provisions for associating intercept information with the dialing profile of a subscriber whose communications are to be monitored, the intercept information including determination information for determining whether to intercept a communication involving the subscriber, and destination information identifying a device to which intercepted communications involving the subscriber are to be sent. The apparatus further includes provisions for communicating with a media relay through which the communications involving the subscriber will be conducted or are being conducted to cause the media relay to send a copy of the communications to a mediation device specified by the destination information, when the determination information meets intercept criteria.

The provisions for associating intercept information may be operably configured to associate the intercept information with the dialing profile when communications involving the subscriber are not in progress.

The provisions for associating intercept information may be operably configured to associate the intercept information when communications involving the subscriber are in progress.

The provisions for associating the intercept information may be operably configured to populate intercept information fields in the dialing profile of the subscriber whose communications are to be monitored.

The apparatus may further include provisions for producing a routing message for routing communications involving the subscriber through components of the IP network and provisions for determining whether the determination information meets the intercept criteria prior to producing the routing message and the provisions for producing the routing message may be operably configured to include at least some of the intercept information in the routing message when the determination information meets the intercept criteria.

The provisions for determining whether the determination information meets the intercept criteria may be operably configured to determine whether a current date and time is within a range specified by the determination information.

The apparatus may further include provisions for identifying a media relay through which communications involving the subscriber will be conducted in response to the routing message.

The apparatus may further include provisions for pre-associating at least one media relay with the dialing profile of the subscriber whose communications are to be monitored and the routing provisions may be operably configured to identify from the dialing profile the media relay pre-associated with the subscriber whose communications are to be monitored.

The provisions for pre-associating may be operably configured to populate media relay fields in the dialing profile with an identification of at least one media relay.

Provisions for associating the intercept information may be operably configured to associate the intercept information associated with the dialing profile of the subscriber whose communications are to be monitored, in response to receipt of

an intercept request message, wherein the intercept request message may comprise the intercept information.

The apparatus may further include provisions for handling an intercept request message. The provisions for handling an intercept request message may include provisions for finding a dialing profile associated with the subscriber whose communications are to be monitored. The provisions for finding a dialing profile may cooperate with the provisions for associating the intercept information with the dialing profile to cause the intercept information to be associated with the dialing profile. The provisions for handling an intercept request message may include provisions for determining whether the intercept criteria are met and provisions for identifying a media relay through which the communications are being conducted.

The apparatus may further include provisions for maintaining active call records for communications in progress, the active call records including a username identifier and a media relay identifier identifying the media relay through which the communications are being conducted and the provisions for identifying a media relay through which the communications are being conducted may be operably configured to locate an active call record associated with communications of the subscriber whose communication are to be monitored to find the media relay associated with the communications.

The apparatus may further include provisions for maintaining direct-inward-dialing (DID) records associating PST telephone numbers with usernames of users subscribing to the IP network, and the provisions for finding a dialing profile associated with the subscriber whose communications are to be monitored may be operably configured to find a username in a DID record bearing a PSTN number associated with the subscriber whose communications are to be monitored and use the username to locate a dialing profile associated with the username.

By employing a media replay, all VoIP communications traverse a point in the VoIP system that is under a provider's control and at which the communications can be copied in real-time to a mediation device that passes the intercepted communication to a law enforcement agency.

By maintaining dialing profiles for respective subscribers and associating intercept information of the type described, with the dialing profiles of subscribers whose communications are to be monitored, the dialing profile can serve as the source of determination information for determining whether or not communications involving the subscriber will be monitored and for providing destination information for specifying where the copy of the communications is to be sent. Use of the dialing profile in this manner easily facilitates the dialing profile to be considered a respository for intercept information for a given subscriber and this respository can be addressed whether a call is being initiated or in progress, thereby simplifying control algorithms because they can cooperate with a common source and format of data in the dialing profile.

In another embodiment, there is a method for causing Internet Protocol (IP) communications to be intercepted in an IP network system in which IP communications between a subscriber of the system and another party occur through a media relay to which the subscriber and the another party address their IP communications destined for each other and which relays the IP communications between the subscriber and the another party, the method comprising causing a call controller to receive a request from the subscriber seeking to initiate communications between the subscriber and the another party and to produce a request to establish an IP communications channel between the subscriber and the another party; and causing a call routing controller to receive from the call controller said request to establish said IP communications channel; access a database in response to receiving said request from said call controller, to locate a dialing profile associated with the subscriber, said dialing profile comprising intercept determination information and destination information, said intercept determination information indicating whether an IP communication from the subscriber should be monitored and said destination information indicating where to send monitored communications; and produce a routing message for receipt by the call controller and separate from any IP communication sent between the subscriber and the another party, for providing routing information for routing the IP communications through the media relay to enable the call controller to establish said IP communications channel through the media relay in response to the routing message; and when said determination information meets intercept criteria, cause said routing message to include at least some of said intercept determination information and said destination information.

The IP communications may include at least one of audio data, pure data, video data, multimedia data, text messaging data and instant messaging data. The method may further comprise causing said call controller to communicate with the media relay to cause the media relay to establish a communication path for relaying IP communications between the subscriber and the another party; and when said intercept determination information and said destination information are included in said routing message, produce a copy of said IP communications between the subscriber and the another party, while the media relay relays communications between the subscriber and the another party; and send said copy to a mediation device identified by said destination information in said routing message.

The method may further comprise associating said determination information and said destination information with said dialing profile when communications involving said subscriber are not in progress. The method may further comprise associating said determination information and said destination information with said dialing profile when communications involving said subscriber are in progress. Associating said determination information and said destination information may comprise populating intercept information fields in said dialing profile of a subscriber whose communications are to be monitored. Associating said determination information and said destination information may comprise populating intercept information fields in said dialing profile of a subscriber whose communications are to be monitored. Determining whether said determination information, meets said intercept criteria may comprise determining whether a current date and time is within a range specified by said determination information. Producing said routing message may comprise identifying a media relay through which communications involving said subscriber will be conducted and including an identification of said media relay in said routing message. The method may further comprise pre-associating at least one media relay with said dialing profile associated with the subscriber whose communications are to be monitored and wherein identifying said media relay may comprise identifying said at least one media relay pre-associated with said subscriber whose communications are to be monitored. Pre-associating may comprise populating media relay fields in said dialing profile with an identification of said at least one media relay.

Associating said determination information and said destination information may comprise associating said determi-

nation information and said destination information with said dialing profile of the subscriber whose communications are to be monitored, in response to receipt of an intercept request message, wherein said intercept request message may comprise said determination information and said destination information. The method may further comprise invoking an intercept request message handler to a) find a dialing profile associated with the subscriber whose communications are to be monitored; b) associate said determination information and said destination information with said dialing profile; and c) identify a media relay through which said communications are being conducted. The dialing profile may include a username identifier and may further comprise maintaining active call records for communications in progress, said active call records may comprise a username identifier and a media relay identifier identifying the media relay through which said communications are being conducted and wherein identifying a media relay through which said communications are being conducted may comprise locating an active call record associated with a channel used by the subscriber whose communications are to be monitored to identify the media relay associated with said channel. The method may further comprise maintaining direct-inward-dial (DID) records associating Public Switched Telephone Network (PSTN) telephone numbers with usernames of users subscribing to said IP network, and wherein finding a dialing profile associated with the subscriber whose communications are to be monitored may comprise finding a username in a DID record bearing a PSTN number associated with the subscriber whose communications are to be monitored and using said username to locate a dialing profile associated with said username. The method may further comprise causing the call controller to receive communications from the mediation device to cause the call controller to interact with the call routing controller to access a dialing profile of a subscriber whose communications are to be monitored and to enter said intercept determination information and destination information into said dialing profile.

In another embodiment, there is a system for causing Internet Protocol (IP) communications to be intercepted in an IP network in which IP communications between a subscriber of said system and another party occur through a media relay to which the subscriber and the another party address their IP communications destined for each other and which relays said IP communications between the subscriber and the another party, the system comprising a call controller and a call routing controller in communication with the call controller; said call controller being operably configured to receive a request from the subscriber seeking to initiate communications between the subscriber and the another party and to produce a request to establish an IP communications channel between the subscriber and the another party and for establishing said IP communications channel through the media relay in response to a routing message produced by said call routing controller; said call routing controller operably configured to receive from the call controller said request to establish said IP communications channel between the subscriber and the another party, access a database in response to receiving said request from said call controller to locate a dialing profile associated with the subscriber, said dialing profile comprising intercept determination information and destination information, said intercept determination information indicating whether an IP communication from the subscriber should be monitored and said destination information indicating where to send monitored communications; and produce a routing message for receipt by the call controller and separate from any IP communication sent between the subscriber and the another party, for providing routing information for routing the IP communications through the media relay; and when said determination information meets intercept criteria, cause said routing message to include at least some of said intercept determination information and said destination information.

The IP communications may include at least one of audio data, pure data, video data, multimedia data, text messaging data and instant messaging data. The call routing controller may be operably configured to respond to said routing message by communicating with the media relay to cause the media relay to establish a communication path to relay said IP communications between the subscriber and the another party; and when said intercept determination information and said destination information are included in said routing message, produce a copy of said IP communications between the subscriber and the another party, while said media relay relays communications between the subscriber and the another party; and send said copy to a mediation device identified by said destination information in said routing message. At least one of said call controller and said call routing controller may be operably configured to associate said intercept information with said dialing profile when communications involving said subscriber are not in progress. At least one of said call controller and said call routing controller may be operably configured to associate said intercept determination information with said dialing profile when communications involving said subscriber are in progress. At least one of said call controller and said call routing controller may be operably configured to populate intercept information fields in said dialing profile of the subscriber whose communications are to be monitored. At least one of said call controller and said call routing controller may be operably configured to populate intercept information fields in said dialing profile of the subscriber whose communications are to be monitored. At least one of said call controller and said call routing controller may be operably configured to determine whether a current date and time is within a range specified by said determination information. At least one of said call controller and said call routing controller may be operably configured to identify a media relay through which communications involving said subscriber will be conducted and to include an identification of said media relay in said routing message. At least one of said call controller and said call routing controller may be operably configured to pre-associate at least one media relay with said dialing profile of the subscriber whose communications are to be monitored and wherein at least one of said call controller and said call routing controller may be operably configured to identify from said dialing profile said at least one media relay pre-associated with said subscriber whose communications are to be monitored. At least one of said call controller and said call routing controller may be operably configured to populate media relay fields in said dialing profile with an identification of at said least one media relay.

At least one of said call controller and said call routing controller may be operably configured to associate said intercept information associated with said dialing profile of the subscriber whose communications are to be monitored, in response to receipt of an intercept request message, wherein said intercept request message may comprise said intercept information. At least one of said call controller and said call routing controller may be operably configured to a) find a dialing profile associated with the subscriber whose communications are to be monitored, b) cause said intercept information to be associated with said dialing profile; and c) identify a media relay through which said communications are

being conducted. The dialing profile may include a username identifier and wherein at least one of said call controller and said call routing controller may be operably configured to maintain active call records for communications in progress, said active call records may comprise a username identifier and a media relay identifier identifying a media relay through which said communications are being conducted and wherein said means for identifying a media relay may be operably configured to locate an active call record associated with a channel used by the subscriber whose communications are to be monitored to identify the media relay associated with said channel. At least one of said call controller and said call routing controller may be operably configured to access direct-inward-dial (DID) records associating Public Switched Telephone Network (PSTN) telephone numbers with usernames of users subscribing to said IP network, and wherein at least one of said call controller and said call routing controller may be operably configured to find a username in a DID record bearing a PSTN number associated with the subscriber whose communications are to be monitored and use said username to locate a dialing profile associated with said username. The call controller may be operably configured to receive communications from the mediation device to cause the call controller to interact with the call routing controller to access a dialing profile of a subscriber whose communications are to be monitored and to enter said intercept determination information and destination information into said dialing profile.

In yet another embodiment, there is a method for causing Internet Protocol (IP) communications to be intercepted in an IP network system in which IP communications between a subscriber of said system and another party occur through a media relay to which the subscriber and the another party address their IP communications destined for each other and which relays said IP communications between the subscriber and the another party, the method comprising in response to a request to establish an IP communications channel between the subscriber and the another party locating a dialing profile associated with the subscriber, said dialing profile comprising intercept determination information and destination information, said intercept determination information indicating whether an IP communication from the subscriber should be monitored and said destination information indicating where to send monitored communications; producing a routing message for receipt by a call controller and separate from any IP communication sent between the subscriber and the another party, for routing the IP communications through the media relay and when said determination information meets intercept criteria, causing said routing message to include at least some of said intercept determination information and said destination information.

The IP communications may include at least one of audio data, pure data, video data, multimedia data, text messaging data and instant messaging data. The method may further comprise responding to said routing message by communicating with the media relay to cause the media relay to establish a communication path for relaying IP communications between the subscriber and the another party; and when said intercept determination information and said destination information are included in said routing message, produce a copy of said IP communications between the subscriber and the another party, while the media relay relays communications between the subscriber and the another party; and send said copy to a mediation device identified by said destination information in said routing message. The method may further comprise associating said determination information and said destination information with said dialing profile when communications involving said subscriber are not in progress. The method may further comprise associating said determination information and said destination information with said subscriber dialing profile when communications involving said subscriber are in progress. Associating said determination information and said destination information may comprise populating intercept information fields in said dialing profile of a subscriber whose communications are to be monitored. Associating said determination information and said destination information may comprise populating intercept information fields in said dialing profile of a subscriber whose communications are to be monitored. Determining whether said determination information meets said intercept criteria may comprise determining whether a current date and time is within a range specified by said determination information. Producing said routing message may comprise identifying a media relay through which communications involving said subscriber will be conducted and including an identification of said media relay in said routing message. The method may further comprise pre-associating at least one media relay with said dialing profile associated with the subscriber whose communications are to be monitored and wherein identifying said media relay may comprise identifying said at least one media relay pre-associated with said subscriber whose communications are to be monitored. Pre-associating may comprise populating media relay fields in said dialing profile with an identification of said at least one media relay.

Associating said determination information and said destination information may comprise associating said determination information and said destination information with said dialing profile of the subscriber whose communications are to be monitored, in response to receipt of an intercept request message, wherein said intercept request message may comprise said determination information and said destination information. The method may further comprise invoking an intercept request message handler to a) find a dialing profile associated with the subscriber whose communications are to be monitored; b) associate said determination information and said destination information with said dialing profile; and c) identify a media relay through which said communications are being conducted. The dialing profile may include a username identifier and may further comprise maintaining active call records for communications in progress, said active call records may comprise a username identifier and a media relay identifier identifying the media relay through which said communications are being conducted and wherein identifying a media relay through which said communications are being conducted may comprise locating an active call record associated with a channel used by the subscriber whose communications are to be monitored to identify the media relay associated with said channel. The method may further comprise maintaining direct-inward-dial (DID) records associating Public Switched Telephone Network (PSTN) telephone numbers with usernames of users subscribing to said IP network, and wherein finding a dialing profile associated with the subscriber whose communications are to be monitored may comprise finding a username in a DID record bearing a PSTN number associated with the subscriber whose communications are to be monitored and using said username to locate a dialing profile associated with said username. The method may further comprise causing the call controller to receive communications from the mediation device to cause the dialing profile of a subscriber whose communications are to be monitored and to receive said intercept determination information and destination information.

Other aspects and features will become apparent to those ordinarily skilled in the art upon review of the following

description of specific embodiments of the development in conjunction with the accompanying figures.

BRIEF DESCRIPTION OF THE DRAWINGS

In drawings which illustrate embodiments of the development,

FIG. **1** is a block diagram of a system according to a first embodiment;

FIG. **2** is a block diagram of a caller VoIP telephone according to the first embodiment;

FIG. **3** is a schematic representation of a SIP Invite message transmitted between the caller telephone and a call controller (CC) shown in FIG. **1**;

FIG. **4** is a block diagram of the call controller shown in FIG. **1**;

FIG. **5** is a flowchart of a process executed by the call controller shown in FIG. **1**;

FIG. **6** is a schematic representation of a routing controller (RC) request message produced by the call controller shown in FIG. **1**;

FIG. **7** is a block diagram of a routing controller (RC) processor circuit of the system shown in FIG. **1**;

FIGS. **8**A-**8**D are flowcharts of a RC Request message handler executed by the RC processor circuit shown in FIG. **7**;

FIG. **9** is a tabular representation of a dialing profile stored in a database accessible by the RC shown in FIG. **1**;

FIG. **10** is a tabular representation of a dialing profile for a Vancouver subscriber;

FIG. **11** is a tabular representation of a dialing profile for a Calgary subscriber;

FIG. **12** is a tabular representation of a dialing profile for a London subscriber;

FIG. **13** is a tabular representation of a direct-inward-dialing (DID) bank table record stored in the database shown in FIG. **1**;

FIG. **14** is a tabular representation of an exemplary DID bank table record for the London subscriber referenced in FIG. **12**;

FIG. **15** is a tabular representation of a routing message transmitted from the routing controller to the call controller shown in FIG. **1**;

FIG. **16** is a tabular representation of a routing message buffer holding a routing message for routing a call to the London callee referenced in FIG. **12**;

FIG. **16**A is a tabular representation of a routing message buffer holding a message for routing a call to the London callee and to a law enforcement agency for the purpose of lawful intercept;

FIG. **17** is a tabular representation of a prefix to supernode table record stored in the database shown in FIG. **1**;

FIG. **18** is a tabular representation of a prefix to supernode table record that would be used for the Calgary callee referenced in FIG. **11**;

FIG. **19** is a tabular representation of a master list record stored in a master list table in the database shown in FIG. **1**;

FIG. **20** is a tabular representation of an exemplary populated master list record;

FIG. **21** is a tabular representation of a suppliers list record stored in the database shown in FIG. **1**;

FIG. **22** is a tabular representation of a specific supplier list record for a first supplier;

FIG. **23** is a tabular representation of a specific supplier list record for a second supplier;

FIG. **24** is a tabular representation of a specific supplier list record for a third supplier;

FIG. **25** is a tabular representation of a routing message, held in a routing message buffer, identifying to the routing controller a plurality of possible suppliers that may carry the call;

FIG. **25**A is a tabular representation of a routing message held in a routing message buffer, with lawful intercept fields appended;

FIG. **26** is a tabular representation of a call block table record;

FIG. **27** is a tabular representation of a call block table record for the Calgary callee;

FIG. **28** is a tabular representation of a call forwarding table record;

FIG. **29** is a tabular representation of am exemplary call forwarding table record specific for the Calgary callee;

FIG. **30** is a tabular representation of a voicemail table record specifying voicemail parameters to enable the caller to leave a voicemail message for the callee;

FIG. **31** is a tabular representation of an exemplary voicemail table record for the Calgary callee;

FIG. **32** is a tabular representation of an exemplary routing message, held in a routing message buffer, indicating call forwarding numbers and a voicemail server identifier;

FIG. **32**A is a tabular representation of an exemplary routing message, held in a routing message buffer, indicating call forwarding numbers and a voicemail server identifier with caller lawful intercept fields appended;

FIG. **32**B is a tabular representation of an exemplary routing message, held in a routing message buffer, indicating call forwarding numbers and a voicemail server identifier with caller and callee lawful intercept fields appended;

FIG. **33** is a flowchart of a routing message handler process executed by the call controller;

FIG. **34** is a schematic representation of messages exchanged during execution of process for establishing audio paths between telephones and a media relay;

FIG. **35** is a tabular representation of an active call record maintained by the call controller of FIG. **1**;

FIG. **36** is a tabular representation of an active call record maintained by the routing controller of FIG. **1**;

FIG. **37** is a tabular representation of a SIP Invite message transmitted from the call controller to the mediation device;

FIG. **38** is a tabular representation of a SIP OK message transmitted from the mediation device to the call controller;

FIG. **39** is a tabular representation of a SIP Bye message transmitted from either of the telephones shown in FIG. **1** to the call controller;

FIG. **40** is a tabular representation of a SIP Bye message sent to the call controller from the Calgary callee;

FIG. **41** is a flowchart of a process executed by the call controller for producing a RC stop message in response to receipt of a SIP Bye message;

FIG. **42** is a tabular representation of an exemplary RC Call Stop message;

FIG. **43** is a tabular representation of an exemplary RC Call Stop message for the Calgary callee;

FIG. **44** is a flowchart of a routing controller Law Enforcement Authority request message handler executed by the routing controller shown in FIG. **1**;

FIG. **45** is a flowchart of a call controller in-call intercept message handler executed by the call controller shown in FIG. **1**;

FIG. **46** is a flowchart of a routing controller in-call intercept shut down routine executed by the routing controller shown in FIG. **1**;

FIG. **47** is a flowchart of a call controller cease intercept message handler routing executed by the call controller shown in FIG. **1**.

DETAILED DESCRIPTION OF CERTAIN EMBODIMENTS

Referring to FIG. **1**, a system for making voice over IP telephone calls is shown generally at **10**. The system includes a first supernode shown generally at **11** and a second supernode shown generally at **21**. The first supernode **11** is located in a geographical area, such as Vancouver B.C., for example and the second supernode **21** is located in London England, for example. Different supernodes may be located in different geographical regions throughout the world to provide telephone service to subscribers in respective regions. These supernodes may be in communication with each other through high speed/high data throughput links including optical fiber, satellite and/or cable links, for example, forming a system backbone. These supernodes may alternatively or in addition be in communication with each other through conventional Internet services. In the embodiment shown, data communication media for providing for data communications between the first and second supernodes **11** and **21** are shown generally at **23** and may include very high speed data links, for example.

In the embodiment shown, the Vancouver supernode **11** provides telephone service to a geographical region comprising Western Canadian customers from Vancouver Island to Ontario and includes a Vancouver subscriber and a Calgary subscriber. Another supernode (not shown) may be located in Eastern Canada to provide services to subscribers in that area.

Other, smaller supernodes similar to the type shown may also be employed within the geographical area serviced by a supernode, to provide for call load sharing, for example within a region of the geographical area serviced by the supernode. However, in general, all supernodes are similar and have the properties described below in connection with the Vancouver supernode **11**.

In this embodiment, the Vancouver supernode includes a call controller (CC) **14**, a routing controller (RC) **16**, a database **18**, a media relay **17** and one or more mediation devices (MD), only one of which is shown at **31**. Subscribers such as the Vancouver subscriber and the Calgary subscriber communicate with the Vancouver supernode **11** using their own Internet Service Providers (ISPs) **13** and **19** which route Internet traffic from these subscribers over the Internet. To these subscribers the Vancouver supernode **11** is accessible at a pre-determined IP address or a fully qualified domain name (FQDN) so that it can be accessed in the usual way through a subscriber's ISP. The subscriber in the city of Vancouver uses a telephone **12** that is capable of communicating with the Vancouver supernode **11** using Session Initiation Protocol (SIP) messages and the Calgary subscriber uses a similar telephone **15**, to communicate with the Vancouver supernode from Calgary, AB.

It should be noted that throughout the description of the embodiments of this development, the IP/UDP addresses of all elements such as the caller and callee telephones, call controller, media relay, and any others, will be assumed to be valid IP/UDP addresses directly accessible via the Internet or a private IP network, for example, depending on the specific implementation of the system. As such, it will be assumed, for example, that the caller and callee telephones will have IP/UDP addresses directly accessible by the call controllers and the media relays on their respective supernodes, and that will not be obscured by Network Address Translation (NAT) or similar mechanisms. In other words, the IP/UDP information contained in SIP messages (for example the SIP Invite message or the RC Request message which will be described below) will match the IP/UDP addresses of the IP packets carrying these SIP messages.

It will be appreciated that in many situations, the IP addresses assigned to various elements of the system may be in a private IP address space, and thus not directly accessible from other elements. Furthermore, it will also be appreciated that NAT is commonly used to share a "public" IP address between multiple devices, for example between home PCs and IP telephones sharing a single Internet connection. For example, a home PC may be assigned an IP address such as 192.168.0.101 and a Voice over IP telephone may be assigned an IP address of 192.168.0.103. These addresses are located in so called "non-routable" address space and cannot be accessed directly from the Internet. In order for these devices to communicate with other computers located on the Internet, these IP addresses have to be converted into a "public" IP address, for example 24.10.10.123 assigned to the subscriber by the Internet Service Provider, by a device performing NAT, typically a home router. In addition to translating the IP addresses, the NAT typically also translates UDP port numbers, for example an audio path originating at an IP telephone and using a UDP port 12378 at its private IP address may have been translated to a UDP port 23465 associated with the public IP address of the NAT device. In other words, when a packet originating from the above IP telephone arrives at an Internet-based supernode, the source IP/UDP address contained in the IP packet header will be 24.10.10.1:23465, whereas the source IP/UDP address information contained in the SIP message inside this IP packet will be 192.168.0.103:12378. The mismatch in the IP/UDP addresses may cause a problem for SIP-based systems because, for example, a supernode will attempt to send messages to a private address of a telephone—the messages will never get there.

It will be appreciated that a number of methods are available to overcome this problem. For example, the SIP NATHelper open source software module may run on the supernode to correlate public IP/UDP address contained in the headers of the IP packets arriving from SIP devices with private IP/UDP addresses in the SIP messages contained in these packets. Therefore, the embodiments of the development described below will function whether or not any of the elements of the system are located behind NAT devices that obscure their real IP/UDP addresses.

Referring to FIG. **1**, in an attempt to make a call by the Vancouver telephone **12** to the Calgary telephone **15**, for example, the Vancouver telephone sends a SIP Invite message to the Vancouver supernode **11** and in response, the call controller **14** sends an RC Request message to the routing controller **16** which makes various enquiries of the database **18** to produce a routing message which is sent to the call controller **14**. The call controller **14** then causes a communications link including audio paths to be established through the media relay **17** which may include the same Vancouver supernode **11**, a different supernode or a communications supplier gateway, for example, to carry voice traffic to and from the call recipient or callee. Subject to certain conditions being satisfied, as will be described below, when lawful intercept of data is to occur, data on the audio paths is copied to the mediation device **31** which may provide for real time listening of the audio data or recording of same.

Subscriber Telephone

Referring to FIG. **2**, in this embodiment, the telephones **12**, **15**, **22** and **25** each includes a processor circuit shown generally at **30** comprising a microprocessor **32**, program memory

34, an input/output (I/O) interface 36, parameter memory 38 and temporary memory 40. The program memory 34, I/O interface 36, parameter memory 38 and temporary memory 40 are all in communication with the microprocessor 32. The I/O interface 36 has a dial input 42 for receiving a dialed telephone number from a keypad, for example, or from a voice recognition unit or from pre-stored telephone numbers stored in the parameter memory 38, for example. For simplicity, a box labelled dialing functions 44 represents any device capable of informing the microprocessor 32 of a callee identifier, e.g., a callee telephone number.

The microprocessor 32 stores the callee identifier in a dialed number buffer 41. In the case of the Vancouver subscriber for example, the dialed number may be 2001 1050 2222, identifying the Calgary subscriber or the dialed number may be a PSTN number, for example. The I/O interface 36 also has a handset interface 46 for receiving and producing signals from and to a handset 45 that the user may place to his ear. The handset interface 46 may include a BLUETOOTH™ wireless interface, a wired interface or speakerphone, for example. The handset 45 acts as a termination point for an audio path (not shown) which will be appreciated later.

The I/O interface 36 also has a network interface 48 to an IP network which may provide a high speed Internet connection, for example, and is operable to connect the telephone to an ISP. The network interface 48 also acts as a part of the audio path, as will be appreciated later.

The parameter memory 38 has a username field 50, a password field 52 an IP address field 53 and a SIP proxy address field 54. The username field 50 is operable to hold a username, which, for the Vancouver subscriber, is 2001 1050 8667. The username is assigned upon subscription or registration into the system and, in this embodiment includes a twelve digit number having a continent code 61, a country code 63, a dealer code 70 and a unique number code 74. The continent code 61 is comprised of the first or left-most digit of the username in this embodiment. The country code 63 is comprised of the next three digits. The dealer code 70 is comprised of the next four digits and the unique number code 74 is comprised of the last four digits. The password field 52 holds a password of up to 512 characters, in this example. The IP address field 53 stores an IP address and UDP port number of the telephone 12, which, for this explanation, is 192.168.0.20:12345. The SIP proxy address field 54 stores an IP address of a SIP proxy which may be provided to the telephone 12 through the network interface 48 as part of a registration procedure.

The program memory 34 stores blocks of codes for directing the microprocessor 32 to carry out the functions of the telephone, one of which includes a firewall block 56 which provides firewall functions to the telephone, to prevent unauthorized access through the network connection to the microprocessor 32 and memories 34, 38 and 40. The program memory 34 also stores call ID codes 57 for establishing a call ID. The call ID codes 57 direct the microprocessor 32 to produce call identifiers having the format of a hexadecimal string and an IP address of the telephone stored in the IP address field 53. Thus, an exemplary call identifier for a call might be FF10@192.168.0.20.

Generally, in response to activating the handset 45 and using the dialing function 44, the microprocessor 32 produces and sends a SIP Invite message as shown in FIG. 3, to the call controller 14 shown in FIG. 1.

Referring to FIG. 3, the SIP Invite message includes a caller identifier field 60, a callee identifier field 62, a digest parameters field 64, a call identifier field 65, a caller IP address field 67 and a caller UDP port field 69. In this embodiment, the caller identifier field 60 includes the username 2001 1050 8667, which is the username stored in the username field 50 of the parameter memory 38 in the Vancouver telephone 12 shown in FIG. 2. In addition, as an example, referring back to FIG. 3, the callee identifier field 62 includes the username 2001 1050 2222 which is the dialed number of the Calgary subscriber stored in the dialed number buffer 41 shown in FIG. 2. The digest parameters field 64 includes digest parameters and the call identifier field 65 includes a code comprising a generated prefix code (FF10) and a suffix which is the IP address of the telephone 12 stored in the IP address field 53. The caller IP address field 67 holds the IP address assigned to the telephone, in this embodiment 192.168.0.20, and the caller UDP port field 69 includes a UDP port identifier identifying a UDP port to which audio data is to be sent for reception by the caller's telephone.

Call Controller

Referring to FIG. 4, a call controller circuit of the call controller 14 (FIG. 1) is shown in greater detail at 100. The call controller circuit 100 includes a microprocessor 102, program memory 104 and an I/O interface 106. The call controller circuit 100 may include a plurality of microprocessors, a plurality of program memories and a plurality of I/O interfaces to be able to handle a large volume of calls. However, for simplicity, the call controller circuit 100 will be described as having only one microprocessor, program memory and I/O interface, it being understood that there may be more.

Generally, the I/O interface 106 includes an input 108 for receiving messages, such as the SIP Invite message shown in FIG. 3, from the telephone shown in FIG. 2. The I/O interface 106 also has an RC Request message output 110 for transmitting an RC Request message to the routing controller 16 of FIG. 1, an RC message input 112 for receiving routing messages from the routing controller 16 (FIG. 1), a media relay (MR) output 114 for transmitting messages to the media relay (FIG. 1) to advise the media relay to establish an audio path, and a MR input 116 for receiving messages from the media relay to which a message has been sent to attempt to establish the audio path. The I/O interface 106 further includes a SIP output 118 for transmitting SIP messages to the telephone 12 (FIG. 1) to advise the telephone of the IP address of the media relay 17 (FIG. 1) which will establish the audio path. The I/O interface 106 further includes mediation device input 119 and output 121 for communicating with the mediation device 31 (FIG. 1).

While certain inputs and outputs have been shown as separate, it will be appreciated that some may be associated with a single IP address and TCP or UDP port. For example, the messages sent and received from the routing controller 16 may be transmitted and received at the same single IP address and TCP or UDP port.

The program memory 104 of the call controller circuit 100 includes blocks of code for directing the microprocessor 102 to carry out various functions of the call controller 14. For example, these blocks of code include a first block 120 for causing the call controller circuit 100 to execute a SIP Invite-to-RC request process to produce an RC Request message in response to a received SIP Invite message. In addition, there is a Routing Message Handler block 122 which causes the call controller circuit 100 to engage the mediation device and/or execute a call handling routine to establish audio paths through a media relay to establish the call. The program memory 104 further includes an in-call intercept message handler 1450 for intercepting a call in progress and a cease intercept message handler 1520 for ceasing the interception of a call in progress.

Referring to FIG. **5**, the SIP Invite-to-RC Request process is shown in more detail at **120**. On receipt of a SIP Invite message of the type shown in FIG. **3**, block **132** of FIG. **5** directs the call controller circuit **100** of FIG. **4** to authenticate the user operating the telephone from which the SIP Invite message originated. This may be done, for example, by prompting the user for a password, by sending a message back to the telephone **12** which is interpreted at the telephone as a request for password entry or the password may automatically be sent to the call controller **14** from the telephone, in response to the message. The call controller **14** may then make enquiries of databases to which it has access, to determine whether or not the user's password matches a password stored in the database. Various functions may be used to pass encryption keys or hash codes back and forth to ensure the secure transmission of passwords.

Should the authentication process fail, the call controller circuit **100** is directed to an error handling block **134** which causes messages to be displayed at the telephone **12** to indicate that there was an authentication error. If the authentication process is successful, block **131** directs the call controller circuit **100** to determine whether or not the contents of the caller identifier field **60** of the SIP Invite message is a validly formatted IP address. If it is a valid IP address, then block **133** directs the call controller circuit **100** to associate a type code with the call to indicate that the call type is a third party invite.

If at block **131** the caller identifier field **60** contents do not identify an IP address, then block **135** directs the call controller circuit **100** to associate a type code with the call to indicate the call type is a regular SIP Invite message. Then, block **136** directs the call controller circuit **100** to establish a call ID by assigning the call ID provided in the call identifier field **65** of the SIP Invite message from the telephone **12**, and at block **138** the call controller circuit is directed to produce an RC Request message of the type shown in FIG. **6** that includes that call ID. Referring back to FIG. **5**, block **139** then directs the call controller circuit **100** to send the RC Request message to the routing controller **16**.

Referring to FIG. **6**, an RC Request message is shown generally at **150** and includes a caller identifier field **152**, a callee identifier field **154**, a digest field **156**, a call ID field **158** and a type field **160**. The caller, callee, digest, and call identifier fields **152**, **154**, **156** and **158** contain copies of the caller, callee, digest parameters and call ID fields **60**, **62**, **64** and **65** of the SIP Invite message **59** shown in FIG. **3**. The type field **160** contains the type code established at block **133** or **135** of FIG. **5** to indicate whether the call is from a third party or system subscriber, respectively. The callee identifier field **154** may include a PSTN number or a system subscriber username as shown, for example.

Routing Controller

Referring to FIG. **7**, the routing controller **16** is shown in greater detail and includes a routing controller processor circuit shown generally at **200**. The RC processor circuit **200** includes a microprocessor **202**, program memory **204**, a table memory **206** and an I/O interface **208**, all in communication with the processor. There may be a plurality of processor circuits (**202**), memories (**204**), etc.

The I/O interface **208** includes a database output port **210** through which a request to the database **18** (FIG. **1**) can be made and includes a database response port **212** for receiving a reply from the database. The I/O interface **208** further includes an RC Request message input **214** for receiving the RC Request message from the call controller **14** and includes a routing message output **216** for sending a routing message back to the call controller **14**.

The program memory **204** includes blocks of codes for directing the RC processor circuit **200** to carry out various functions of the routing controller **16**. One of these blocks implements an RC Request message handler process **250** which directs the RC to produce a routing message in response to a received RC Request message of the type shown at **150** in FIG. **6**. Referring back to FIG. **7**, the program memory **204** further includes a Law Enforcement Authority (LEA) request message handler **1400** and an in-call intercept shut down routine **1500**.

The RC Request message handler process **250** is shown in greater detail in FIGS. **8**A through **8**D.

RC Request Message Handler

Referring to FIG. **8**A, the RC Request message handler process **250** begins with a first block **252** that directs the RC processor circuit **200** (FIG. **7**) to store the contents of the RC Request message **150** (FIG. **6**) in buffers. Block **254** then directs the RC processor circuit **200** to use the contents of the caller identifier field **152** in the RC Request message shown in FIG. **6**, to locate and retrieve a dialing profile for the caller from the database **18**.

The routing controller maintains, in the database, a dialing profile for each subscriber to the system. Referring to FIG. **9**, an exemplary dialing profile is shown generally at **256** and includes system fields including a username field **258**, a domain field **260**, a national dialing digits (NDD) field **262**, an IDDs (IDD) field **264**, a country code field **266**, a local area codes field **267**, a caller minimum local length field **268**, a caller maximum local length field **270** and a reseller field **273**.

The exemplary dialing profile further includes lawful intercept related fields including a lawful intercept (LI) flag field **702**, at least one mediation device field **704**, at least one warrant ID field **706**, and intercept period start and stop date/time fields **708** and **710**. The LI flag field **702**, the warrant ID filed **706** and the LI start/stop fields **708** and **710** may be regarded as determination information fields for determining whether to intercept a communication involving the subscriber and the MD1 address field **704** may be regarded as a destination information field for identifying a device to which intercepted communications involving the subscriber are to be sent.

The system fields (**258**, **260**, **262**, **264**, **266**, **267**, **268**, **270**, **273**) are assigned values by a system operator or are assigned automatically according to pre-defined algorithms (not shown) when a user registers with the system to become a subscriber. The lawful intercept fields (**702**, **704**, **706**, **708**, **710**) are assigned values in response to communications with one or more authorized devices and may be populated at any time regardless of whether or not communications involving the subscriber are in progress.

For example, referring back to FIG. **1** the mediation device **31** may be regarded as an authorized device operated by a law enforcement authority **293**. A communications channel between the call controller **14** and the mediation device **31** may be established to permit the mediation device to communicate with the call controller to cause the call controller to communicate with the routing controller **16** to find a subscriber record in the database **18** which is associated with a subscriber for which a warrant for lawful intercept has been obtained. For example, once a warrant identifying a user and permitting lawful intercept of that user's communications has been received by the law enforcement authority **293**, that authority can use its own computers to communicate with the mediation device **31** to cause the mediation device to communicate with the call controller **14** to cause the call controller to interact with the routing controller **16** to access a dialing profile (FIG. **9**) for the user specified in the warrant and load

the lawful intercept fields (**702**, **704**, **706**, **708**, **710**) with data that sets the lawful intercept flag field **702** to "on", stores an IP address of the mediation device **31** in the MD1 address field **704**, loads the warrant ID field **706** with an identifier of the warrant and loads the start and stop fields **708** and **710** with start and stop dates and times to specify a period during which lawful intercept of communications of the identified user may occur according to the warrant. Thus, intercept information is associated with the dialing profile by the routing controller, in response to information it receives from the call controller.

A plurality of groups of lawful intercept fields of the type shown may be added, each group being added by a different authorized device, for example, if several different law enforcement agencies operating the same or different mediation devices have warrants to monitor communications of a user. Alternatively the authorized device may include a handover interface operable to communicate with the call controller or routing controller to access the database to load the lawful intercept fields associated with a subscriber of interest.

An exemplary dialing profile for the Vancouver subscriber is shown generally at **276** in FIG. **10** and indicates that the username field includes the username 2001 1050 8667 which is the same as the contents of the username field **50** in the Vancouver telephone **12** shown in FIG. **2**.

Referring back to FIG. **10**, the domain field **260** includes a domain name as shown at **282**, including a supernode type identifier **284**, a location code identifier **286**, a system provider identifier **288** and a top level domain identifier **290**, identifying a domain or supernode associated with the user identified by the contents of the username field **258**.

In this embodiment, the supernode type identifier **284** includes the code "sp" identifying a supernode and the location code identifier **286** identifies the supernode as being in Vancouver (YVR). The system provider identifier **288** identifies the company supplying the service and the top level domain identifier **290** identifies the "com" domain.

The national dialing digit (NDD) field **262** in this embodiment includes the digit "1" and, in general, includes a digit specified by the International Telecommunications Union-Telecommunications Standardization Sector (ITU-T) E.164 Recommendation which assigns national dialing digits to certain countries. Herein numbering sequences compliant with this standard will be regarded as "E.164" numbers.

The International Dialing Digit (IDD) field **264** includes the code 011 and in general includes a code assigned by the ITU-T according to the country or geographical location of the user.

The country code field **266** includes the digit "1" and in general includes a number assigned by the ITU-T to represent the country in which the user is located.

The local area codes field **267** includes the numbers **604** and **778** and generally includes a list of area codes that have been assigned by the ITU-T to the geographical area in which the subscriber is located. The caller minimum and maximum local number length fields **268** and **270** hold the number **10** representing minimum and maximum local number lengths permitted in the area code(s) specified by the contents of the local area codes field **267**. The reseller field **273** holds a code identifying a retailer of the telephone services, and in the embodiment shown, the retailer is "Klondike".

Initially, the lawful intercept fields shown in FIG. **9** might not be included in the dialing profile and may be added as described above, by the mediation device **31**, in the event a warrant is obtained to intercept the user's calls. Alternatively, the lawful intercept fields may be included, but populated with null values until modified by a mediation device **31**.

A dialing profile of the type shown at **256** in FIG. **9** is produced whenever a user registers with the system or agrees to become a subscriber to the system. Thus, for example, a user wishing to subscribe to the system may contact an office maintained by a system operator and personnel in the office may ask the user certain questions about his location and service preferences, whereupon tables can be used to provide office personnel with appropriate information to be entered into the username, domain, NDD, IDD, country code, local area codes and caller minimum and maximum local length fields **258**, **260**, **262**, **264**, **266**, **267**, **268**, **270** to establish a dialing profile for the user.

Referring to FIGS. **11** and **12**, dialing profiles for subscribers in Calgary and London, respectively for example, are shown.

In addition to creating dialing profiles, optionally when a user registers with the system, a direct inward dialing (DID) record of the type shown at **268** in FIG. **13** is added to a direct inward dialing table in the database **18** to associate the username with a host name of the supernode with which the user is associated and with an E.164 number on the PSTN network.

In this embodiment, the DID bank table records include a username field **281**, a user domain field **272** and a DID field **274**, for holding the username, hostname of the supernode, and an E.164 number respectively.

A DID bank table record for the London subscriber is shown generally at **291** in FIG. **14**.

In addition to creating dialing profiles and DID records when a user registers with the system, call blocking records of the type shown in FIG. **26**, call forwarding records of the type shown in FIG. **28** and voicemail records of the type shown in FIG. **30** may be stored in the database **18** when a new subscriber is added to the system.

Referring back to FIG. **8**A, after being directed at block **254** to retrieve a dialing profile for the caller, a dialing profile such as shown at **276** in FIG. **10** is retrieved and the RC processor circuit **200** is directed to perform certain checks on the callee identifier provided by the contents of the callee identifier field **154** of the RC Request message shown in FIG. **6**. These checks are shown in greater detail in FIG. **8**B.

Referring to FIG. **8**B, the RC processor circuit **200** is directed to a first block **257** that causes it to determine whether a digit pattern of the callee identifier **154** provided in the RC Request message includes a pattern that matches the contents of the IDD field **264** in the caller dialing profile **276** shown in FIG. **10**. If so, then block **259** directs the RC processor circuit **200** to set a call type code identifier (not shown) to indicate that the call is a long distance call, e.g., from the Vancouver subscriber to the London subscriber, and block **261** directs the RC processor circuit **200** to produce a reformatted callee identifier by reformatting the callee identifier into a predetermined target format. In this embodiment, this is done by removing the pattern of digits matching the IDD field contents **264** of the caller dialing profile **276** to effectively shorten the number. Then, block **263** directs the RC processor circuit **200** to determine whether or not the reformatted callee identifier meets criteria establishing it as a number compliant with the E.164 Recommendation set by the ITU-T and if the length does not meet this criteria, block **265** directs the RC processor circuit **200** to send back to the call controller **14** a message indicating that the length of the call identifier is not correct. The process **250** is then ended. At the call controller **14**, routines may respond to the incorrect length message by transmitting a message back to the telephone **12** to indicate that an invalid number has been dialed.

Still referring to FIG. **8**B, if the length of the reformatted callee identifier meets the criteria set forth at block **263**, block **269** directs the RC processor circuit **200** to determine whether or not the reformatted callee identifier is associated with a direct inward dialing (DID) bank table record such as shown at **268** in FIG. **13**.

An exemplary DID bank table record entry for the London callee is shown generally at **291** in FIG. **14**. The username field **281** and user domain field **272** are as specified in the username and user domain fields **258** and **260** of the dialing profile **276** shown in FIG. **12**. The contents of the DID field **274** include an E.164 telephone number including a country code **283**, an area code **285**, an exchange code **287** and a number **289**. If the user has multiple telephone numbers, then multiple records of the type shown at **291** would be included in the DID bank table in the database **18**, each having the same username and user domain, but different DID field **274** contents reflecting the different telephone numbers associated with that user.

Referring back to FIG. **8**B, at block **269**, if the RC processor circuit **200** finds that the reformatted callee identifier produced at block **261** is found in a record in the DID bank table, then the callee is a subscriber to the system and block **279** directs the RC processor circuit **200** to copy the contents of the corresponding username field **270** into a callee ID buffer (not shown). Thus, the RC processor circuit **200** locates a subscriber username associated with the reformatted callee identifier. The processor is then directed to block **275** at point B in FIG. **8**A.

Subscriber to Subscriber Calls Between Different Nodes

Referring back to FIG. **8**A, block **275** then directs the RC processor circuit **200** to determine whether or not the subscriber username is associated with the same supernode as the caller. To do this, the RC processor circuit **200** determines whether or not the continent code (**61**) of the username stored in the callee ID buffer is the same as the continent code (**61**) of the username of the caller specified by the caller identifier field **152** of the RC Request message shown in FIG. **6**. If they are not the same, block **277** directs the RC processor circuit **200** to set a call type flag (not shown) to indicate that the call is a cross-domain call. Then, block **350** directs the RC processor circuit **200** to produce a routing message identifying the supernode in the system with which the callee is associated and to set a TTL for the call to the maximum value of 99999. The supernode in the system, with which the callee is associated, is determined by using the callee username stored in the callee ID buffer to address a supernode table having records of the type as shown at **370** in FIG. **17**.

Referring to FIG. **17**, each prefix to supernode table record **370** has a prefix field **372** and a supernode address field **374**. The prefix field **372** includes the first n digits of the callee identifier. In this case n=1. The supernode address field **374** holds a code representing the IP address or a fully qualified domain name of the supernode associated with the code stored in the prefix field **372**. Referring to FIG. **18**, for example, if the prefix is 4, the supernode address associated with that prefix is sp.1 hr.digifonica.com, identifying the London supernode **21**, for example.

Referring to FIG. **15**, a generic routing message is shown generally at **352** and includes a supplier prefix field **354**, a delimiter field **356**, a callee field **358**, at least one route field **360**, a time-to-live (TTL) field **362** and other fields **364**. The supplier prefix field **354** holds a code for identifying supplier traffic. The delimiter field holds a symbol that delimits the supplier prefix code from the callee field **358** and in this embodiment, the symbol is a number sign (#). The route field **360** holds a domain name or an IP address of a gateway or supernode that is to carry the call and the TTL field **362** holds a value representing the number of seconds the call is permitted to be active, based on subscriber available minutes and other billing parameters, for example.

Referring to FIG. **8**A and FIG. **16**, in this example the routing message produced by the RC processor circuit **200** at block **350** is shown generally at **366** and includes only a callee field **358**, a route field **360** and a TTL field **362**.

The callee field **358** holds the full username of the callee and the route field **360**, shown in FIG. **15**, contains the identification of the domain with which the callee is associated, i.e., sp.1 hr.digifonica.com.

Having produced the routing message **366** as shown in FIG. **16**A, referring back to FIG. **8**A, block **351** then directs the RC processor circuit **200** to check the caller dialing profile (see FIG. **9**) to determine whether or not it contains lawful intercept fields (**702**, **704**, **706**, **708**, **710**) and if so, to determine whether or not the determination information contained therein meets intercept criteria. The intercept criteria may be that the lawful intercept flag field **702** (FIG. **9**) contains a flag indicating lawful intercept is enabled and whether the current date and time is within the period specified by the LI start date/time field contents **708** and the LI stop date/time field contents **710**, for example. If the intercept criteria are met, block **353** directs the RC processor circuit **200** to append the contents of the lawful intercept fields **702**, **704**, **706**, **708**, **710** to the routing message produced at block **350** to produce a routing message as shown in FIG. **16**A. Generally, the determination of whether or not the destination information meets intercept criteria is done prior to producing the routing message so that when the intercept criteria are met, at least some of the intercept information, in this embodiment all of it, can be included in the routing message.

If at block **351** in FIG. **8**A, it is determined there are no lawful intercept fields associated with the caller dialing profile or that the intercept criteria are not met, the processor does not append any lawful intercept fields to the routing message produced at block **350** in FIG. **8**A and the routing message shown in FIG. **16** is sent to the call controller **14** as shown at block **380**. If the lawful intercept fields have been appended, block **380** directs the RC processor circuit **200** to send the routing message shown in FIG. **16**A to the call controller **14** (FIG. **1**).

Referring back to FIG. **8**B, if at block **257**, the callee identifier specified by the contents of the callee field **154** of the RC Request message shown in FIG. **6** does not begin with an IDD, block **381** directs the RC processor circuit **200** to determine whether or not the callee identifier begins with the same national dial digit code as assigned to the caller. To do this, the processor is directed to refer to the caller dialing profile shown in FIG. **10**. In the embodiment shown, the NDD code **262** is the digit 1. Thus, if the callee identifier begins with the digit 1, the RC processor circuit **200** is directed to block **382** in FIG. **8**B.

Block **382** directs the RC processor circuit **200** to examine the callee identifier to determine whether or not digits following the NDD code identify an area code that is the same as any of the area codes identified in the local area codes field **267** of the caller dialing profile **276** shown in FIG. **10**. If not, block **384** directs the RC processor circuit **200** to set a call type variable (not shown) to a code indicating the call is a national code. If the digits identify an area code that is the same as a local area code associated with the caller, block **386** directs the RC processor circuit **200** to set the call type variable to indicate that the call type is a local call, national style. After executing blocks **384** or **386**, block **388** directs the RC processor circuit **200** to format the number dialed by removing

the national dial digit (NDD) and prepending a caller country code identified by the country code field **266** of the caller dialing profile shown in FIG. **10**. The RC processor circuit **200** is then directed to block **263** to perform the processes described above beginning at block **263**.

If at block **381**, the callee identifier does not begin with an NDD code, block **390** directs the RC processor circuit **200** to determine whether the callee identifier begins with digits that identify the same area code as the caller. Again, the reference for this is the caller profile shown in FIG. **10** and the RC processor circuit **200** determines whether or not the first few digits in the callee identifier identify an area code identified by the local area code field **267** of the caller profile. If so, then block **392** directs the RC processor circuit **200** to set the call type to a code indicating the call is a local call and block **394** directs the RC processor circuit **200** to prepend the caller country code to the callee identifier, the caller country code being determined from the country code field **266** in the caller profile shown in FIG. **10**. The RC processor circuit **200** is then directed to block **263** for processing as described above beginning at block **263**.

If at block **390**, the callee identifier does not have the same area code as the caller, block **396** directs the RC processor circuit **200** to determine whether the callee identifier has the same number of digits as the number of digits indicated in either the caller minimum local number length field **268** or the caller maximum local number length field **270** of the caller profile shown in FIG. **10**. If so, then block **398** directs the RC processor circuit **200** to set the call type to local and block **400** directs the processor to prepend to the callee identifier the caller country code as indicated by the country code field **266** of the caller profile shown in FIG. **10** followed by the caller area code as indicated by the local area code field **267** of the caller profile shown in FIG. **10**. The RC processor circuit **200** is then directed to block **263** for further processing as described above beginning at block **263**.

If at block **396**, the callee identifier has a length that does not match the length specified by the contents of the caller minimum local number length field **268** or the caller maximum local number length field **270**, block **402** directs the RC processor circuit **200** to determine whether or not the callee identifier identifies a valid username. To do this, the RC processor circuit **200** searches through the database of dialing profiles to find a dialing profile having username field contents **258** that match the callee identifier. If no match is found, block **404** directs the RC processor circuit **200** to send an error message back to the call controller (**14**). If at block **402**, a dialing profile having a username field **258** that matches the callee identifier is found, block **406** directs the RC processor circuit **200** to set the call type to a code indicating the call is a network call and the processor is directed to block **275** of FIG. **8**A, to continue processing the RC message handler process **250**.

From FIG. **8**B, it will be appreciated that there are certain groups of blocks of codes that direct the RC processor circuit **200** to determine whether the callee identifier has certain features such as an IDD code, a NDD code, an area code and a length that meet certain criteria and to reformat the callee identifier as necessary into a predetermined target format including only a country code, area code, and a normal telephone number, for example, to cause the callee identifier to be compatible with the E.164 number plan standard, in this embodiment. This enables the RC processor circuit **200** directed by block **279** to have a consistent format of callee identifiers for use in searching through the DID bank table records of the type shown in FIG. **13** to determine how to route calls for subscriber to subscriber calls on the same system.

Subscriber to Non-Subscriber Calls

Not all calls will be subscriber-to-subscriber calls and this will be detected by the RC processor circuit **200** when it executes block **269** of FIG. **8**B, and does not find a record that is associated with the callee in the DID bank table. When this occurs, the RC processor circuit **200** is directed to block **408** which causes it to set the callee identifier equal to the reformatted callee identifier, i.e., the number compatible with the E.164 standard. Then, block **410** directs the RC processor circuit **200** to address a master list having records of the type shown in FIG. **19**.

Each master list record includes a master list ID field **500**, a dialing code field **502**, a country code field **504**, a national sign number field **506**, a minimum length field **508**, a maximum length field **510**, a NDD field **512**, an IDD field **514** and a buffer rate field **516**.

The master list ID field **500** holds a unique code such as **1019**, for example, identifying a route identification (route ID). The dialing code field **502** holds a predetermined number pattern which the RC processor circuit **200** uses at block **410** in FIG. **8**B to find the master list record having a dialing code matching the first few digits of the reformatted callee identifier. The country code field **504** holds a number representing the country code associated with the record and the national sign number field **506** holds a number representing the area code associated with the record. (It will be observed that the dialing code is a combination of the contents of the country code field **504** and the national sign number field **506**). The minimum length field **508** holds a number representing the minimum number of digits that can be associated with the record and the maximum length field **51** holds a number representing the maximum number of digits in a number with which the record may be compared. The NDD field **512** holds a number representing an access code used to make a call within the country specified by the contents of the country code field **504** and the IDD field **514** holds a number representing the international prefix needed to dial a call from the country indicated by the country code.

Thus, for example, a master list record may have a format as shown in FIG. **20** with exemplary field contents as shown.

Referring back to FIG. **8**B, using the country code and area code portions of the reformatted callee identifier that has been formatted for compatibility with the E.164 standard, block **410** directs the RC processor circuit **200** to find a master list record such as the one shown in FIG. **20** having a dialing code that matches the country code and area code of the callee identifier. Thus, in this example, the RC processor circuit **200** would find a master list record having an ID field with the number **1019**. This number may be also referred to as a route ID. Thus, a route ID number is found in the master list record associated with a predetermined number pattern in the reformatted callee identifier.

After execution of block **410** in FIG. **8**B, the process **250** continues as shown in FIG. **8**D. Referring to FIG. **8**D, block **412** directs the RC processor circuit **200** to use the route ID number to locate at least one supplier record identifying a supplier operable to supply a communications link for this route. To do this, block **412** directs the RC processor circuit **200** to search a supplier ID table having records of the type shown in FIG. **21**.

Referring to FIG. **21**, the supplier list records include a supplier ID field **540**, a route ID field **542**, an optional prefix field **544**, a route identifier field **546**, a NDD/IDD rewrite field **548** and a rate field **550**. The supplier ID field **540** holds a code

identifying the name of the supplier and the route ID field **542** holds a code for associating the supplier record with a route, and hence with a master list record. The prefix field **544** holds a string used to identify the supplier traffic and the route identifier field **546** holds an IP address of a gateway operated by the supplier indicated by the supplier ID field **540**. The NDD/IDD rewrite field **548** holds a code and the rate field **550** holds a code indicating the cost per second to the system operator to use the route provided by the gateway specified by the contents of the route identifier field **546**. Exemplary supplier records are shown in FIGS. **22**, **23** and **24** for the suppliers shown in FIG. **1** which may include Telus, Shaw and Sprint, respectively, for example.

Referring back to FIG. **8**D, at block **412** the RC processor circuit **200** finds all supplier records that identify the route ID found at block **410** of FIG. **8**B.

Referring back to FIG. **8**D, block **560** directs the RC processor circuit **200** to begin to produce routing messages of the type shown in FIG. **16**. To do this, the RC processor circuit **200** loads a routing message buffer as shown in FIG. **25** with a supplier prefix of the least costly supplier where the least costly supplier is determined from the rate fields **550** of the records associated with respective suppliers.

Referring to FIGS. **22-24**, in the embodiment shown, the supplier "Telus" has the lowest number in the rate field **550** and therefore the prefix **4973** associated with that supplier is loaded into the routing message buffer shown in FIG. **25** first. The prefix **4973** is then delimited by the number sign and the reformatted callee identifier is next loaded into the routing message buffer. Then, the contents of the route identifier field **546** of the record associated with the supplier Telus are added to the message after an @ sign delimiter and then block **564** in FIG. **8**D directs the RC processor circuit **200** to get a TTL value, which in this embodiment may be 3600 seconds, for example. Block **566** then directs the RC processor circuit **200** to load this TTL value in the routing message buffer shown in FIG. **25**. Accordingly, the first part of the routing message is shown generally at **570** in FIG. **25**.

Referring back to FIG. **8**D, block **568** directs the RC processor circuit **200** back to block **560** and causes it to repeat blocks **560**, **562**, **564** and **566** for each successive supplier until the routing message buffer is loaded with information pertaining to each supplier. Thus, the second portion of the routing message is shown at **572** in FIG. **25** and this second portion relates to the second supplier identified by the record shown in FIG. **23** and referring back to FIG. **25**, the third portion of the routing message is shown at **574** which is associated with a third supplier as indicated by the supplier record shown in FIG. **24**. Consequently, referring to FIG. **25**, the routing message buffer holds a routing message identifying a plurality of different suppliers able to provide gateways to establish a communication link to permit the caller to contact the callee. Each of the suppliers is identified, in ascending order according the rates contained in the rate fields **550** of the supplier list records shown in FIGS. **22-24**, in this embodiment. Other criteria for determining the order in which suppliers are listed in the routing message may include preferred supplier priorities which may be established based on service agreements, for example. In this case additional fields may be provided in respective supplier records to hold values representing supplier priority.

After the routing message buffer has been loaded as shown in FIG. **25**, block **567** directs the RC processor circuit **200** to check the caller dialing profile shown in FIG. **10** to determine whether or not it contains lawful intercept fields as shown in FIG. **9**, and if so, to determine whether or not the intercept criteria are met by checking whether the lawful intercept flag field **702** contains a flag indicating that lawful intercept is enabled and checking whether the current date and time are within the period specified by the LI start date/time field contents **708** and the LI stop date/time field contents **710**. If the intercept criteria are met, block **569** directs the RC processor circuit **200** to append the contents of the lawful intercept fields **702**, **704**, **706**, **708**, **710** to the routing message stored in the routing message buffer, as shown in FIG. **25**A. Again, the determination of whether or not the destination information meets intercept criteria is done prior to producing the routing message so that when the intercept criteria are met, at least some of the intercept information, in this embodiment all of it, can be included in the routing message.

If at block **567**, it is determined there are no lawful intercept fields associated with the caller dialing profile shown in FIG. **10** or that the intercept criteria are not met, the RC processor circuit **200** does not append any lawful intercept fields to the routing message stored in the routing message buffer shown in FIG. **25**.

Block **568** then directs the RC processor circuit **200** to send the contents of the routing message buffer, i.e. the routing message shown in FIG. **25** or **25**A, to the call controller **14** in FIG. **1**.

Subscriber to Subscriber Calls within the Same Node

Referring back to FIG. **8**A, if at block **275**, the callee identifier stored in the callee ID buffer has a prefix that identifies the same supernode as that associated with the caller, block **600** directs the RC processor circuit **200** to use the callee identifier to locate and retrieve a dialing profile for the callee identified by the callee identifier. The dialing profile is of the type shown in FIG. **9**, and may contain data as shown in FIG. **11**, for example. Block **602** of FIG. **8**A directs the RC processor circuit **200** to get call block, call forward and voicemail tables from the database **18** based on the username identified in the callee profile retrieved by the RC processor circuit at block **600**. Call block, call forward and voicemail tables have records as shown in FIGS. **26**, **28** and **30** for example.

Referring to FIG. **26**, the call block records include a username field **604** and a block pattern field **606**. The username field holds a username matching the username in the username field **258** of the dialing profile associated with the callee and the block pattern field **606** holds one or more E.164-compatible numbers or usernames identifying PSTN numbers or system subscribers from whom the subscriber identified by the contents of the username field **604** does not wish to receive calls.

Referring back to FIG. **8**A and referring to FIG. **27**, block **608** directs the RC processor circuit **200** to determine whether or not the caller identifier matches a block pattern stored in the block pattern field **606** of the call block record associated with the callee identified by the contents of the username field **604** in FIG. **26**. If the caller identifier matches a block pattern stored in the block pattern field **606**, block **610** directs the RC processor circuit **200** to send a drop call or non-completion message to the call controller (**14**) and the process is ended. If the caller identifier does not match a block pattern associated with the callee, block **612** directs the RC processor circuit **200** to determine whether or not call forwarding is required.

Referring to FIG. **28**, records in the call forwarding table include a username field **614**, a destination number field **616**, a destination number field **616** and a sequence number field **618**. The username field **614** stores a code representing a subscriber with which the record is associated. The destination number field **616** holds a username or number representing a number to which the current call should be forwarded and the sequence number field **618** holds an integer number

indicating the order in which the username associated with the corresponding destination number field **616** should be attempted for call forwarding. The call forwarding table may have a plurality of records for a given user. The RC processor circuit **200** uses the contents of the sequence number field **618** to consider the records for a given subscriber in order. As will be appreciated below, this enables the call forwarding numbers to be tried in an ordered sequence.

Referring back to FIG. **8**A and referring to FIG. **28**, if at block **612** in FIG. **8**A, the call forwarding record for the callee identified by the callee identifier contains no contents in the destination number field **616** and accordingly no contents in the sequence number field **618**, there are no call forwarding entries and the RC processor circuit **200** is directed to load the routing message buffer shown in FIG. **32** with the callee username and domain, as shown at **650** in FIG. **32**. The processor is then directed to block **620** in FIG. **8**C.

If there are contents in the destination number field of the call forwarding record as shown in FIG. **29**, block **622** shown in FIG. **8**A directs the RC processor circuit **200** to search the dialing profile table to find a dialing profile record of the type shown in FIG. **9**, for the user identified in the destination number field **616** in the call forwarding table record of FIG. **29** and to store the contents of the destination number field in the routing message buffer shown in FIG. **32**. The RC processor circuit **200** is then directed to load the contents of the domain field **260** shown in FIG. **9** associated with the username specified by the contents of the destination number field **616** of FIG. **29** into the routing message buffer as shown at **652** in FIG. **32**. This process is repeated for each call forwarding record associated with the callee identified by the callee identifier to add to the routing message buffer all call forwarding usernames and domains associated with the callee.

Referring to FIG. **8**C, at block **620** the processor is directed to determine whether or not the user identified by the callee identifier has paid for voicemail service and this is done by checking to see whether or not a flag is set in a voicemail record of the type shown in FIG. **30** in a voicemail table stored in the database **18** in FIG. **1**.

Referring to FIG. **30**, voicemail table records include a username field **624**, a voicemail server field **626**, a seconds-to-voicemail field **628** and an enable field **630**. The username field **624** stores the username of the subscriber who purchased the service. The voicemail server field **626** holds a code identifying an IP address or a fully qualified domain name (FQDN) of a voicemail server associated with the subscriber identified by the username field **624**. The seconds-to-voicemail field **628** holds a code identifying the time to wait before engaging voicemail and the enable field **630** holds a code representing whether or not voicemail is enabled for the user identified by the contents of the username field **624**.

Therefore, referring back to FIG. **8**C, at block **620** the processor searches for a voicemail record as shown in FIG. **31** having username field **624** contents matching the callee identifier and looks at the contents of the enabled field **630** to determine whether or not voicemail is enabled. If voicemail is enabled, then block **640** in FIG. **8**C directs the processor to store the contents of the voicemail server field **626** of FIG. **31** and the contents of the seconds to voicemail field **628** of FIG. **31** in the routing message buffer as shown at **654** in FIG. **32**. Referring back to FIG. **8**C, block **642** then directs the processor to get time to live (TTL) values for each route specified by the routing message according to any of a plurality of criteria such as, for example, the cost of routing and the user's account balance. These TTL values are then appended to corresponding routes already stored in the routing message buffer.

Block **644** of FIG. **8**C then directs the RC processor circuit **200** to store the IP address of the current supernode in the routing message buffer as shown at **656** in FIG. **32**. An exemplary routing message is shown in the routing message buffer shown in FIG. **32**.

Block **645** of FIG. **8**C then directs the processor to check the caller dialing profile shown in FIG. **10** to determine whether or not it contains lawful intercept fields of the type shown in FIG. **9** and if so, to determine whether or not the intercept criteria are met. In this embodiment, this includes determining whether the lawful intercept flag field **702** contains a flag indicating that lawful intercept is enabled and checking whether the current date and time is within the period specified by the LI start date/time field contents **708** and the LI stop date/time field contents **710**. If the intercept criteria are met, block **647** directs the RC processor circuit **200** to append the contents of the lawful intercept fields **702**, **704**, **706**, **708**, **710** to the routing message shown in FIG. **32**A to produce a routing message with lawful intercept field contents, as shown in FIG. **32**A. Again, the determination of whether or not the destination information meets intercept criteria is done prior to producing the routing message so that when the intercept criteria are met, at least some of the intercept information, in this embodiment all of it, can be included in the routing message.

Referring back to FIG. **8**C, if at block **645**, it is determined there are no lawful intercept fields associated with the caller dialing profile of FIG. **10** or that the intercept criteria are not met after producing the routing message shown in FIG. **32**A the processor is directed to block **649** which causes the processor to check the callee dialing profile shown in FIG. **11** to determine whether or not it contains lawful intercept fields of the type shown in FIG. **9** and if so, to determine whether or not the intercept criteria are met by checking whether the current date and time is within the period specified by the LI start date/time field contents **708** and the LI stop date/time field contents **710** of the callee dialing profile. If the intercept criteria are met, block **651** directs the RC processor circuit **200** to append the contents of the lawful intercept fields **702**, **704**, **706**, **708**, **710** associated with the callee dialing profile to the routing message shown in FIG. **32**A to produce a routing message. If at block **649** of FIG. **8**C, it is determined there are no lawful intercept fields associated with the callee dialing profile or that the intercept criteria are not met, no lawful intercept fields associated with the callee are appended to the routing message shown in FIG. **32** or **32**A. Referring back to FIG. **8**C, block **646** then directs the RC processor circuit **200** to send the routing message to the call controller **14**.

Response to Routing Message

Referring back to FIG. **1**, the routing message, whether of the type shown in FIG. **16**, **16**A, **25**, **25**A, **32**, **32**A or **32**B, is received at the call controller **14**. Referring to FIG. **33**, when a routing message is received at the call controller, the routing message handler **122** is invoked at the call controller. The routing message handler is shown in detail in FIG. **33**.

Referring to FIG. **33**, the routing message handler begins with a first block **1200** that directs the processor circuit to determine whether the routing message includes lawful intercept fields. If not, the processor is directed to block **1206** which causes it to invoke a call handling routine shown in FIG. **34**. Referring to FIG. **34**, as a first step in the call handling routine, a message **1100** is sent from the call controller **14** to the media relay **17**, the message including the caller telephone IP address and UDP port as determined from the caller IP address field **67** and caller UDP port field **69** in the SIP Invite message shown in FIG. **3**.

The specific media relay **17** to which the message **1100** is sent may be selected from a pool of available media relays and such media relays may be at any geographical location. The purpose of the message **1100** is to advise the media relay that a call is desired to be set up to communicate with the IP address and UDP number of the caller telephone.

A media relay selected from media relays located at a geographical location that facilitates communication at a desired quality of service between the media relay **17** and the caller telephone **12** and callee telephone **15** may provide the best service. Alternatively, media relays may be pre-assigned or pre-associated with users by including and populating media relay fields of the dialing profiles of users, such as shown at **1150** in FIG. **9**, identifying one or more media relays through which calls associated with the associated user are to be directed. In this case, the identifications of possible media relays obtained from the media relay fields **1150** may be sent to the call controller in additional fields in the routing message. These media relay fields are shown at **1152** in FIGS. **16**, **16**A, **25**, **25**A, **32**, **32**A and **32**B. In essence, the media relay through which communications involving the communications involving the subscriber will be conducted is identified in response to the routing message.

Referring back to FIG. **34**, in this case, the message **1100** may be sent in a polling fashion to all media relays identified by the media relay fields **1150**, until one responds. Alternatively, the message **1100** may be sent simultaneously to all of the media relays.

In response, in the case where the media relay is known or is involved in polling as described above, the media relay **17** to which the message **1100** is sent sends a media relay status message **1102** back to the call controller **14**, the message including a media relay IP address and UDP port number at which the media relay will establish a UDP connection to the callee telephone **15**. Audio data to/from the callee telephone **15** will be transmitted over this connection. In the case where the message **1100** is sent to a plurality of media relays, the first one to respond with a media relay status message is the one through which the call will be carried. Media relay status messages from the remaining media relays can be ignored.

After the media relay status message **1102** is received at the call controller, the call controller **14** then sends a SIP Invite message **1104** of the type shown in FIG. **3** to the callee telephone **15**, including the contents of the caller and callee identifier fields (**60** and **62**), the call identifier field (**65**) and the media relay IP address and the media relay UDP port number assigned to the audio path connection with the callee telephone **15**, to invite the callee telephone to establish a connection with the media relay **17**.

The purpose of the SIP Invite message **1104** is to advise the callee telephone of the caller and call ID and of the IP address and UDP port number of the media relay through which the callee telephone should send and receive audio data.

The callee telephone **15** stores the media relay IP address and assigned UDP port number in the audio path IP address buffer **47** shown in FIG. **2** and configures itself to create a socket between the media relay IP/UDP address and the callee telephone IP address and a UDP port number that the callee telephone **15** desires to use as an audio path to the caller telephone. Instead of being sent or received directly to or from the caller telephone, the callee telephone **15** will send and receive audio data from the media relay. To indicate this, the callee telephone **15** sends a SIP OK message **1106** back to the call controller **14**, the message including the callee IP address and UDP port number from its IP address field (**53** in FIG. **3**) at which the callee telephone **15** will establish an audio path connection with the media relay **17**. The purpose of this SIP OK message **1106** is to advise the call controller of the IP address and UDP port number through which the media relay should send and receive audio data to and from the callee telephone.

The call controller **14** then sends a message **1108** to the media relay **17** including the IP address and UDP port number that the callee telephone **15** will use for the audio path connection with the media relay. The purpose of the message **1108** is to advise the media relay of the IP address and UDP port number through which it should send and receive audio data to and from the callee telephone.

The media relay **17** then determines a UDP port through which it will carry audio data to and from the caller telephone **12** and sends a message **1110** to the call controller (**14**), the message including the media relay IP address and the media relay UDP port number the media relay will use to carry audio to and from the caller telephone **12**. The purpose of this message **1110** is to advise the call controller **14** of the IP address and UDP port number through which it expects to transfer audio data to and from the caller telephone.

The call controller **14** then sends a SIP OK message **1112** to the caller telephone **12** to indicate that the call may now proceed. The SIP OK message includes the caller and callee usernames, the call ID and the media relay **17** IP address and the UDP port number assigned to the audio connection with the caller telephone **12**. The purpose of this SIP OK message **1112** is to advise the caller telephone **12** of the IP address and UDP port number through which it should exchange audio data with the media relay **17**.

If the routing message is of the type shown in FIG. **25** where there are a plurality of suppliers available, the call handling routine proceeds as described above with the exception that instead of communicating with the callee telephone directly, the call controller **14** communicates with a gateway provided by a supplier. If a SIP OK message is not received back from the first gateway, the processor is directed to send the SIP Invite message **1104** to a gateway of the next indicated supplier. For example, the call controller **14** sends the SIP Invite message **1104** to the first supplier, in this case Telus, to determine whether or not Telus is able to handle the call. If Telus does not send back a SIP OK message **1106** within a specified time or sends a message indicating that it is not able to handle the call, the call controller proceeds to send a SIP Invite message **1104** to the next supplier, in this case Shaw. The process is repeated until one of the suppliers responds with a SIP OK message **1'06** indicating that it is available to carry the call and the process proceeds as shown in connection with messages **1108**, **1110** and **1112**. For example, the supplier "Telus" sends back a SIP OK message and thus provides a gateway to the PSTN at IP address 72.64.39.58 as provided by the routing message from the contents of the route identifier field **546** of the corresponding supplier record shown in FIG. **22**.

Referring back to FIG. **1**, if the call controller **14** receives a message of the type shown in FIG. **32**, i.e., a type that has one call forwarding number and/or a voicemail number, the call controller attempts to establish a call (using SIP Invite message **1104**) to the callee telephone **15** and if no call is established (i.e., message **1106** is not received) within a predetermined time, the call controller **14** attempts to establish a call with the next user identified in the call routing message, by sending a SIP invite message like message **1104** to the next user. This process is repeated until all call forwarding possibilities have been exhausted, in which case an audio path is established with the voicemail server **19** identified in the routing message. The voicemail server **19** sends the SIP OK message **1106** in response to receipt of the SIP invite message

1104 and functions as described above in connection with the callee telephone 15 to permit an outgoing audio message provided by the voicemail server to be heard by the caller and to permit the caller to record an audio message on the voicemail server.

When audio paths are established, a call timer (not shown) maintained by the call controller logs the start date and time of the call and logs the call ID and adds an active call record of the type shown in FIG. 35 to an active call list, maintained by the call controller.

In this embodiment, the call controller active call record shown in FIG. 35 includes a call ID field 1300, a caller IP address field 1302, a caller port field 1304, a callee IP address field 1306, a callee port field 1308, a media relay ID field 1310, a media relay caller port field 1312 and a media relay callee port field 1314. The contents of the call ID field 1300 are established at block 136 in FIG. 5. The contents of the caller IP address field 1302 are established from the contents of the caller IP address field 67 of the SIP invite message shown in FIG. 3. The contents of the caller port field 1304 are established from the caller UDP port field 69 of the SIP invite message shown in FIG. 3. The contents of the callee IP address field 1306 and callee port field 1308 are established from the SIP OK message 1106 shown in FIG. 34.

The media relay ID field 1310 is populated with an identification of the media relay handling the call. In the example shown, the media relay is number 42. The contents of the media relay caller port field are obtained from the message 1110 shown in FIG. 34 and the contents in the media relay callee port field 1314 are obtained from the media relay status message 1102 shown in FIG. 34. Each time a call is established, an active call record of the type shown in FIG. 35 is added to an active call log maintained by the call controller.

The routing controller also maintains an active call log containing active call records however the active call records maintained by the routing controller are different from the active call records held by the call controller. For example, referring to FIG. 36, an active call record held by the routing controller includes a call ID field 1316, a caller field 1318, a callee field 1320 and a call controller ID field 1322. Information for populating these fields may be received in a message (not shown) transmitted from the call controller to the routing controller after an active call record has been entered into the active call log of the call controller.

The message from the call controller 14 to the routing controller 16, indicating that an active call has been established may include the contents of the call ID field 1300 shown in FIG. 35 and a call controller unique ID number held by the call controller. The routing controller 16 matches the call ID with the caller and callee user names contained in the original call routing message (FIG. 16, 16A, 25, 25A, 32, 32A, 32B) that caused the call controller 14 to route the call, to populate the caller and callee fields 1318 and 1320 shown in FIG. 36, respectively. It will be appreciated that a plurality of call controllers may be associated with a single routing controller, in which case the call controller ID allows the routing controller to uniquely identify the call controller associated with the call ID indicated by the contents of the call ID field 1316. In the example shown, the call controller is number 61.

The active call records facilitate intercepting a call already in progress, as will be described below.

Referring back to FIG. 33, if at block 1200 it is determined that the routing message has lawful intercept fields, block 1202 directs the call controller circuit 100 (FIG. 4) to send a SIP Invite message as shown in FIG. 37 to a mediation device identified by the mediation device IP address in the routing message as obtained from the user dialing profile MD1 address field 704 as shown at 256 in FIG. 9. Referring to FIG. 37, the SIP Invite message includes caller and callee identifier fields 1020, 1022, a call ID field 1024, a warrant ID field 1026 and other intercept related information fields 1028, if desired. The caller, callee and call ID field contents 1020, 1022, and 1024 are obtained from the original SIP Invite message shown in FIG. 6. The contents of the warrant ID field 1026 and intercept related info fields 1028 are obtained from the routing message which would be of the type shown in FIG. 16A, 25A, 32A or 32B.

Referring back to FIG. 33, block 1204 then directs the call controller 14 to receive a reply message, as shown in FIG. 38, from the mediation device 31. The reply message is a SIP OK message that includes caller, callee, and call ID fields 1040, 1042, 1044 as described above and further includes a mediation device IP address field 1046 and a mediation device UDP caller port number field 1048 and a UDP callee port number field 1050 identifying UDP ports at the mediation device IP address to which the media relay is to send copies of audio data streams received from the caller and callee telephones respectively. Block 1206 then directs the call controller to execute the call handling routine shown in FIG. 34 with the exception that the message 1100 additionally includes the contents of the mediation device IP address field 1046, the mediation device UDP caller port number field 1048 and the UDP callee port number field 1050 of the SIP OK message shown in FIG. 38.

All other messages are the same as described above in connection with the call handling routine as shown in FIG. 34, but in response to receiving the additional information in the message 1100, the media relay automatically configures itself to provide for copying the audio data received from both the caller telephone and the callee telephone to the mediation device IP address and the UDP caller port number and the UDP callee port number respectively.

Referring back to FIG. 1, as audio data originating at the caller telephone 12 and callee telephone 15 passes through the media relay 17, this data is copied to the mediation device UDP port for the caller and the mediation device UDP port for the callee, as indicated by the SIP invite message 1100. This enables law enforcement agencies to monitor audio communications between the caller and callee and/or to record such communications at the mediation device.

Thus, when the determination information in the dialing profile meets intercept criteria, the call controller communicates with the media relay through which communications involving the subscriber whose communications are to be monitored will be handled to cause the media relay to send a copy of such communications to a mediation device specified by the destination information included in the intercept information associated with the dialing profile associated with the subscriber whose communications are to be monitored.

Terminating the Call

In the event that either the caller or the callee terminates a call, the telephone of the terminating party sends a SIP Bye message to the call controller 14. An exemplary SIP Bye message is shown at 900 in FIG. 39 and includes a caller field 902, a callee field 904 and a call ID field 906. The caller field 902 holds the caller username, the callee field 904 holds a PSTN compatible number or username, and the call ID field 906 holds a unique call identifier field of the type shown in the call identifier field 65 of the SIP Invite message shown in FIG. 3.

Thus, for example, referring to FIG. 40, a SIP Bye message for the Calgary callee is shown generally at 908 and the caller field 902 holds a username identifying the Vancouver caller,

in this case 2001 1050 8667, the callee field **904** holds a username identifying the Calgary callee, in this case 2001 1050 2222, and the call ID field **906** holds the code FA10@192.168.0.20, which is the call ID for the call.

The SIP Bye message shown in FIG. **40** is received at the call controller **14** and the call controller executes a process as shown generally at **910** in FIG. **41**. The process includes a first block **912** that directs the call controller circuit (**100**) to copy the caller, callee and call ID field contents from the SIP Bye message **900** shown in FIG. **39** received from the terminating party to corresponding fields of an RC stop message buffer (not shown). Block **914** then directs the call controller circuit **100** to copy the call start time from the call timer and to obtain a Call Stop time from the call timer. Block **916** then directs the call controller to calculate a communication session time by determining the difference in time between the call start time and the Call Stop time. This communication session time is then stored in a corresponding field of the RC Call Stop message buffer. Block **918** then directs the call controller circuit **100** to populate the route field with the IP address of the gateway supplier, if any. An RC Call Stop message produced as described above is shown generally at **1000** in FIG. **42**. An RC Call Stop message specifically associated with the call made to the Calgary callee is shown generally at **1021** in FIG. **43**.

Referring to FIG. **42**, the RC call stop message **1000** includes a caller field **1002**, callee field **1004**, a call ID field **1006**, an account start time field **1008**, an account stop time field **1010**, a communication session time field **1012** and a route field **1014**. The caller field **1002** holds a username, the callee field **1004** holds a PSTN-compatible number or system number, the call ID field **1006** holds the unique call identifier received from the SIP Invite message shown in FIG. **3**, the account start time field **1008** holds the date and start time of the call, the account stop time field **1010** holds the date and time the call ended, the communication session time field **1012** holds a value representing the difference between the start time and the stop time, in seconds, and the route field **1014** holds the IP address for a gateway, if a gateway is used to establish the call.

Referring to FIG. **43**, an exemplary RC call stop message for the Calgary callee is shown generally at **1021**. In this example the caller field **1002** holds the username 2001 1050 8667 identifying the Vancouver caller and the callee field **1004** holds the username 2001 1050 2222 identifying the Calgary callee. The contents of the call ID field **1006** are FA10@192.168.0.20. The contents of the account start time field **1008** are 2006-12-30 12:12:12 and the contents of the account stop time field **1010** are 2006-12-30 12:12:14. The contents of the communication session time field **1012** are 2 to indicate 2 seconds call duration and the contents of the route field are blank but would be 72.64.39.58 if the "Telus" gateway were used, for example.

Referring back to FIG. **41**, after having produced an RC Call Stop message, block **920** directs the call controller circuit **100** to send the RC stop message contained in the RC Call Stop message buffer to the routing controller (**16**).

The RC (**16**) receives the Call Stop message and a routing controller Call Stop message process (not shown) is invoked at the routing controller to deal with charges and billing for the call.

Block **922** directs the call controller circuit **100** to send a Bye message to the party that did not terminate the call i.e. to the non-terminating party.

Block **924** then directs the call controller circuit **100** to send a SIP Bye message of the type shown in FIG. **39** to the media relay **17** to cause the media relay to disconnect the audio path sockets associated with the caller telephone IP/UDP address and the callee telephone IP/UDP address. In disconnecting these communication sockets, the media relay **17** deletes associations between the caller telephone IP/UDP address media relay caller IP/UDP address and between the caller telephone IP/UDP address and media relay callee IP/UDP address.

If the media relay (**17**) was configured for lawful intercept, block **926** of FIG. **41** then directs the call controller circuit **100** to send a SIP Bye message of the type shown in FIG. **39** to the mediation device **31** to inform the mediation device that the call has ended and to disconnect communication sockets between the media relay caller and callee IP/UDP port addresses and the IP/UDP port address to which the audio data received at the caller and callee IP/UDP port addresses were being copied.

It will be appreciated that in the foregoing description, the components described cooperate to detect a requirement for intercept at the time a call is set up. In the following description an explanation is provided to describe how to intercept a call while the call is in progress.

Intercepting a Call in Progress

Referring back to FIG. **1**, to intercept a call while the call is in progress, the law enforcement authority **293** may communicate with a mediation device, or may communicate with the call controller or may communicate with the routing controller or may communicate with a handover interface that communicates with any of the foregoing components to cause the routing controller to receive a law enforcement authority (LEA) intercept request message including intercept information, such as that which would be associated with fields **702-710** in FIG. **9**, for example.

In response to receipt of a LEA intercept request message, the routing controller LEA request message handler shown at **1400** in FIG. **44** is invoked.

The LEA request message handler **1400** begins with a first block **1402** that directs the routing controller processor circuit to communicate with the database **18** in which dialing profile records of the type shown in FIG. **9** are stored to find a dialing profile associated with the user whose calls are to be monitored.

If the username is not known, but a DID number (i.e. a PSTN number) is known, the routing controller may cause a search through the DID bank table records of the type shown in FIG. **13**, for example to find a username associated with a DID number. If the username is not known but a name and address is known, other records such as billing records (not shown) associating names and addresses with usernames may be searched to find a username associated with a given name and/or address of a person whose calls are to be intercepted. Regardless of the information available, to facilitate call interception any way of finding the unique dialing profile associated with the user whose calls are to be intercepted is a first step to facilitating call interception, in this embodiment.

Once the dialing profile is located, block **1404** directs the routing controller processor circuit to associate the intercept information with the dialing profile by appending and/or populating the lawful intercept fields of the dialing profile with such information as provided in the LEA intercept request message.

Block **1406** then directs the routing controller processor circuit to determine whether the intercept criteria are met by the intercept information now included in the dialing profile. This is done by determining whether the LI flag (**702**) is on, and the current date and time is within the LI start stop

date/time ranges. If the intercept criteria are not met, the process is ended. Otherwise the processor is directed to block **1408**.

Block **1408** directs the routing controller processor circuit to use the username of the dialing profile found at block **1402** to search caller and callee fields of routing controller active call records shown in FIG. **36** that have contents matching the username associated with the dialing profile. If no such record is found, the user is not currently engaged in a call and the process is ended. If the user is engaged in a call, the routing controller active call record will be found. Block **1410** then directs the routing controller processor circuit to find the call controller id and call id of the associated call, from the routing controller active call record shown in FIG. **36**.

Block **1412** then directs the routing controller processor circuit to transmit an in-call intercept message to the call controller identified by the contents of the call controller id field **1322** of the routing controller active call record. The in-call intercept message includes the call id as determined from the routing controller active call record and the IP address of the mediation device associated with the law enforcement authority interested in intercepting the call. The IP address of the mediation device may be obtained from the law enforcement authority request message, or the dialing profile, for example.

Block **1414** then directs the routing controller processor circuit to wait a specified time to receive a call controller intercept status message back from the call controller indicating whether or not the intercept function has been activated.

Referring to FIG. **45**, upon receipt of an in-call intercept message at the call controller (**14**) the call controller executes an in-call intercept message handler shown generally at **1450**. The in-call intercept message handler **1450** begins with a first block **1452** that directs the call controller processor circuit to send a SIP invite message to the mediation device associated with the IP address of the mediation device, received in the in-call intercept message.

Block **1454** then directs the call controller processor circuit to receive an IP address and callee and caller UDP port numbers from the mediation device, where this IP address and UDP port numbers are network locations at which the mediation device will expect to receive audio data streams from the media relay through which the call is carried.

Block **1456** then directs the call controller processor circuit to identify a media relay through which communications to be monitored are being conducted by using the username of the subscriber whose communications are to be monitored to locate an active call record in the call controller active call list to locate a media relay identifier such as the IP address of the media relay indicated by the contents of the media relay ID field **1310** of the call controller active call record shown in FIG. **35**. The call controller processor circuit is then directed to send an intercept request message to the media relay (**17**) that is handling the call. The intercept request message includes the mediation device IP address and caller and callee UDP port numbers to identify to the media relay (**17**) the mediation device IP address and UDP port number(s) at which it expects to receive a copy of the audio data stream from the caller and callee respectively.

In response, the media relay establishes internal connections between the caller and callee IP addresses and UDP ports and callee IP address and UDP port of the mediation device. Then, the media relay sends a media relay status message back to the call controller indicating whether or not internal connections have been established and that call intercept has been initiated.

As seen at block **1458**, the call controller processor circuit is directed to receive the media relay status message and block **1460** directs the call controller processor circuit to send a call controller intercept status message back to the routing controller to indicate that the call intercept function has been established. The routing controller may communicate this status back to the law enforcement authority that issued the law enforcement authority request message. In the meantime, communications involving the caller or callee whose communications are to be monitored, which travel through the media relay, are copied and sent to the mediation device.

Thus, after associating intercept information with the dialing profile of the subscriber whose communications are to be monitored, when the determination information included in the intercept information meets intercept criteria, the call controller communicates with the media relay through which the communications of the subscriber whose communications are to be monitored to cause such media relay to send a copy of such communications to a mediation device specified by the destination information included in the intercept information.

When the call is ended, the call is shut down in the same way as described above.

Should the law enforcement authority desire to cease interception of the call during the call, an LEA request message requesting that the intercept function be stopped is sent to the routing controller from the law enforcement authority through any of the paths described above. This invokes the LEA request message handler such as shown in FIG. **44** which causes the routing controller processor circuit to execute blocks **1402**, **1404**. At block **1404**, the routing controller processor circuit is directed to change the contents of the lawful intercept fields to at least set the lawful intercept flag (**702** in FIG. **9**) inactive.

Then, at block **1406**, the intercept criteria are not met and the processor is directed to block **1416**, which causes the routing controller processor circuit to determine whether or not an interception function is in progress. This can be determined, for example, by maintaining evidence of the receipt of the confirmation message from the call controller, received at block **1414** of the LEA request message handler **1400**.

If an intercept is not in progress, the LEA request message handler **1400** is ended.

If an intercept if in progress, block **1418** directs the routing controller processor circuit to execute an in-call intercept shut down routine as shown at **1500** in FIG. **46**. The in-call intercept shut down routine begins with a first block **1502** which directs the routing controller processor circuit to locate the routing controller active call record having caller or callee field contents equal to the username indicated in the dialing profile found at bock **1402** of the LEA request message handler **1400** shown in FIG. **44**. Having found the active call record, block **1504** directs the routing controller processor circuit to find, in the routing controller active call record shown in FIG. **36**, the call controller id (**1322**) and the call id (**1316**) associated with the call. Block **1506** then directs the routing controller processor circuit to send a cease intercept message (not shown) to the call controller identified by the call controller id determined at block **1504**. This cease intercept message includes the call id determined at block **1504** and an identification of the mediation device, the identification being obtained from the MD1 address field (**704** in FIG. **9**) of the dialing profile for the user whose calls are currently being intercepted. Block **1508** then directs the routing controller processor circuit to wait a specified time to receive a confirmation message from the call controller to indicate that the intercept function has been shut down.

Referring to FIG. **47**, upon receipt of the cease intercept message at the call controller (**14**), a cease intercept message handler **1520** is invoked at the call controller. The cease intercept message handler **1520** begins with a first block **1522** that directs the call controller processor circuit to send a SIP stop message to the mediation device identified in the cease intercept message received from the routing controller. In response to the SIP stop message, the mediation device stops receiving audio data and sends a confirmation message back to the call controller.

Block **1524** directs the call controller processor circuit to receive the confirmation message back from the mediation device.

Block **1526** then directs the call controller processor circuit to send a stop intercept message to the media relay **17** identified by the contents of the media relay ID field **1310** of the active call record shown in FIG. **35**. The stop intercept message includes the contents of the media relay caller port ID field **1312** and media relay callee port field **1314** included in the active call record and identifies to the media relay which ports to shut down. In response to the stop intercept message, the media relay **17** disconnects the connections between the media relay caller port and the mediation device port that was receiving the audio data from the caller and the connection between the media relay callee port and the mediation device port that was receiving audio data from the callee. The media relay then sends an MR stop status message to the call controller.

Block **1528** directs the call controller processor circuit to receive the MR stop status message and block **1530** directs the call controller to send a stop status message to the routing controller **16**.

In an alternative embodiment, the routing controller does not maintain active call records but each call controller does. In such an embodiment, blocks **1408** and **1410** of FIG. **44** are replaced with a single block **1600** that directs the routing controller processor circuit to poll each call controller to determine whether or not its active call list contains an entry having caller or callee field contents equal to the username determined from the dialing profile located at block **1402**.

If any of the polled call controllers has such a record, that call controller transmits a response message back to the routing controller, the response message including a call controller ID identifying that call controller. More than one call controller may have an active call record having caller or callee field contents equal to the username determined from the user profile. Such would be the case in a conference call, for example.

The routing controller processor circuit then executes blocks **1412** and **1414** as described above or the process is ended if none of the polled call controllers contains a call record with caller and callee field contents matching the username determined from the dialing profile located at block **1402**.

In effect therefore, block **1600** provides an alternate way of finding call controllers that are currently carrying a call associated with the user of interest.

In another embodiment, an interface to the routing controller and/or the call controller may be provided to enable law enforcement authorities to have direct access or a copy of the active call list maintained by the call controller and/or routing controller.

From the foregoing, it will be appreciated that indications of whether or not communications of a subscriber to the system are to be monitored are provided by law enforcement agencies directly into a subscriber dialing profile shown in FIG. **9**. This dialing profile is used to route a call involving the subscriber and is checked for lawful intercept requirements to determine whether or not the media relay should copy audio data associated with the call to a mediation device for lawful monitoring and/or recording purposes.

While the system has been described in connection with the monitoring of audio streams, it may similarly be used for monitoring any other data streams such as pure data and/or video or multimedia data, for example, between subscribers to the system or between a subscriber and a non-subscriber to the system.

While specific embodiments of the invention have been described and illustrated, such embodiments should be considered illustrative of the invention only and not as limiting the invention as construed in accordance with the accompanying claims.

What is claimed is:

1. A method for causing Internet Protocol (IP) communications to be intercepted in an IP network system in which IP communications between a subscriber of the system and another party occur through a media relay to which the subscriber and the another party address their IP communications destined for each other and which relays the IP communications between the subscriber and the another party, the method comprising:

causing a call controller to receive a request from the subscriber seeking to initiate communications between the subscriber and the another party and to produce a request to establish an IP communications channel between the subscriber and the another party; and

causing a call routing controller to:

receive from the call controller said request to establish said IP communications channel;

access a database in response to receiving said request from said call controller, to locate a dialing profile associated with the subscriber, said dialing profile comprising intercept determination information and destination information, said intercept determination information indicating whether an IP communication from the subscriber should be monitored and said destination information indicating where to send monitored communications; and

produce a routing message for receipt by the call controller and separate from any IP communication sent between the subscriber and the another party, for providing routing information for routing the IP communications through the media relay to enable the call controller to establish said IP communications channel through the media relay in response to the routing message; and

when said determination information meets intercept criteria, cause said routing message to include at least some of said intercept determination information and said destination information.

2. The method of claim **1** wherein said IP communications include at least one of audio data, pure data, video data, multimedia data, text messaging data and instant messaging data.

3. The method of claim **2** further comprising causing said call controller to communicate with the media relay to cause the media relay to:

establish a communication path for relaying IP communications between the subscriber and the another party; and

when said intercept determination information and said destination information are included in said routing message, produce a copy of said IP communications between the subscriber and the another party, while the

media relay relays communications between the subscriber and the another party; and

send said copy to a mediation device identified by said destination information in said routing message.

4. The method of claim **2** further comprising associating said determination information and said destination information with said dialing profile when communications involving said subscriber are not in progress.

5. The method of claim **2** further comprising associating said determination information and said destination information with said dialing profile when communications involving said subscriber are in progress.

6. The method of claim **4** wherein associating said determination information and said destination information comprises populating intercept information fields in said dialing profile of a subscriber whose communications are to be monitored.

7. The method of claim **5** wherein associating said determination information and said destination information comprises populating intercept information fields in said dialing profile of a subscriber whose communications are to be monitored.

8. The method of claim **7** wherein determining whether said determination information meets said intercept criteria comprises determining whether a current date and time is within a range specified by said determination information.

9. The method of claim **8** wherein producing said routing message comprises identifying a media relay through which communications involving said subscriber will be conducted and including an identification of said media relay in said routing message.

10. The method of claim **9** further comprising pre-associating at least one media relay with said dialing profile associated with the subscriber whose communications are to be monitored and wherein identifying said media relay comprises identifying said at least one media relay pre-associated with said subscriber whose communications are to be monitored.

11. The method of claim **10** wherein pre-associating comprises populating media relay fields in said dialing profile with an identification of said at least one media relay.

12. The method of claim **5** wherein associating said determination information and said destination information comprises associating said determination information and said destination information with said dialing profile of the subscriber whose communications are to be monitored, in response to receipt of an intercept request message, wherein said intercept request message comprises said determination information and said destination information.

13. The method of claim **12** further comprising invoking an intercept request message handler to:

a) find a dialing profile associated with the subscriber whose communications are to be monitored;

b) associate said determination information and said destination information with said dialing profile; and

c) identify a media relay through which said communications are being conducted.

14. The method of claim **13** wherein said dialing profile includes a username identifier and further comprising maintaining active call records for communications in progress, said active call records comprising a username identifier and a media relay identifier identifying the media relay through which said communications are being conducted and wherein identifying a media relay through which said communications are being conducted comprises locating an active call record associated with a channel used by the subscriber whose communications are to be monitored to identify the media relay associated with said channel.

15. The method of claim **14** further comprising maintaining direct-inward-dial (DID) records associating Public Switched Telephone Network (PSTN) telephone numbers with usernames of users subscribing to said IP network, and wherein finding a dialing profile associated with the subscriber whose communications are to be monitored comprises finding a username in a DID record bearing a PSTN number associated with the subscriber whose communications are to be monitored and using said username to locate a dialing profile associated with said username.

16. The method of claim **3** further comprising causing the call controller to receive communications from the mediation device to cause the call controller to interact with the call routing controller to access a dialing profile of a subscriber whose communications are to be monitored and to enter said intercept determination information and destination information into said dialing profile.

17. A system for causing Internet Protocol (IP) communications to be intercepted in an IP network in which IP communications between a subscriber of said system and another party occur through a media relay to which the subscriber and the another party address their IP communications destined for each other and which relays said IP communications between the subscriber and the another party, the system comprising:

a call controller and a call routing controller in communication with the call controller;

said call controller being operably configured to receive a request from the subscriber seeking to initiate communications between the subscriber and the another party and to produce a request to establish an IP communications channel between the subscriber and the another party and for establishing said IP communications channel through the media relay in response to a routing message produced by said call routing controller;

said call routing controller operably configured to:

receive from the call controller said request to establish said IP communications channel between the subscriber and the another party, access a database in response to receiving said request from said call controller to locate a dialing profile associated with the subscriber, said dialing profile comprising intercept determination information and destination information, said intercept determination information indicating whether an IP communication from the subscriber should be monitored and said destination information indicating where to send monitored communications; and

produce a routing message for receipt by the call controller and separate from any IP communication sent between the subscriber and the another party, for providing routing information for routing the IP communications through the media relay; and

when said determination information meets intercept criteria, cause said routing message to include at least some of said intercept determination information and said destination information.

18. The system of claim **17** wherein said IP communications include at least one of audio data, pure data, video data, multimedia data, text messaging data and instant messaging data.

19. The system of claim **18** wherein said call routing controller is operably configured to respond to said routing message by communicating with the media relay to cause the media relay to:

establish a communication path to relay said IP communications between the subscriber and the another party; and

when said intercept determination information and said destination information are included in said routing message, produce a copy of said IP communications between the subscriber and the another party, while said media relay relays communications between the subscriber and the another party; and

send said copy to a mediation device identified by said destination information in said routing message.

20. The system of claim **19** wherein at least one of said call controller and said call routing controller is operably configured to associate said intercept information with said dialing profile when communications involving said subscriber are not in progress.

21. The system of claim **19** wherein at least one of said call controller and said call routing controller is operably configured to associate said intercept determination information with said dialing profile when communications involving said subscriber are in progress.

22. The system of claim **20** wherein at least one of said call controller and said call routing controller is operably configured to populate intercept information fields in said dialing profile of the subscriber whose communications are to be monitored.

23. The system of claim **21** wherein at least one of said call controller and said call routing controller is operably configured to populate intercept information fields in said dialing profile of the subscriber whose communications are to be monitored.

24. The system of claim **23** wherein at least one of said call controller and said call routing controller is operably configured to determine whether a current date and time is within a range specified by said determination information.

25. The system of claim **24** wherein at least one of said call controller and said call routing controller is operably configured to identify a media relay through which communications involving said subscriber will be conducted and to include an identification of said media relay in said routing message.

26. The system of claim **25** wherein at least one of said call controller and said call routing controller is operably configured to pre-associate at least one media relay with said dialing profile of the subscriber whose communications are to be monitored and wherein at least one of said call controller and said call routing controller is operably configured to identify from said dialing profile said at least one media relay pre-associated with said subscriber whose communications are to be monitored.

27. The system of claim **26** wherein at least one of said call controller and said call routing controller is operably configured to populate media relay fields in said dialing profile with an identification of at said least one media relay.

28. The system of claim **21** wherein at least one of said call controller and said call routing controller is operably configured to associate said intercept information associated with said dialing profile of the subscriber whose communications are to be monitored, in response to receipt of an intercept request message, wherein said intercept request message comprises said intercept information.

29. The system of claim **28** wherein at least one of said call controller and said call routing controller is operably configured to:

a) find a dialing profile associated with the subscriber whose communications are to be monitored,

b) cause said intercept information to be associated with said dialing profile; and

c) identify a media relay through which said communications are being conducted.

30. The system of claim **29** wherein said dialing profile includes a username identifier and wherein at least one of said call controller and said call routing controller is operably configured to maintain active call records for communications in progress, said active call records comprising a username identifier and a media relay identifier identifying a media relay through which said communications are being conducted and wherein said means for identifying a media relay is operably configured to locate an active call record associated with a channel used by the subscriber whose communications are to be monitored to identify the media relay associated with said channel.

31. The system of claim **30** wherein at least one of said call controller and said call routing controller is operably configured to access direct-inward-dial (DID) records associating Public Switched Telephone Network (PSTN) telephone numbers with usernames of users subscribing to said IP network, and wherein at least one of said call controller and said call routing controller is operably configured to find a username in a DID record bearing a PSTN number associated with the subscriber whose communications are to be monitored and use said username to locate a dialing profile associated with said username.

32. The system of claim **19** wherein the call controller is operably configured to receive communications from the mediation device to cause the call controller to interact with the call routing controller to access a dialing profile of a subscriber whose communications are to be monitored and to enter said intercept determination information and destination information into said dialing profile.

33. A method for causing Internet Protocol (IP) communications to be intercepted in an IP network system in which IP communications between a subscriber of said system and another party occur through a media relay to which the subscriber and the another party address their IP communications destined for each other and which relays said IP communications between the subscriber and the another party, the method comprising:

in response to a request to establish an IP communications channel between the subscriber and the another party:

locating a dialing profile associated with the subscriber, said dialing profile comprising intercept determination information and destination information, said intercept determination information indicating whether an IP communication from the subscriber should be monitored and said destination information indicating where to send monitored communications;

producing a routing message for receipt by a call controller and separate from any IP communication sent between the subscriber and the another party, for routing the IP communications through the media relay and when said determination information meets intercept criteria, causing said routing message to include at least some of said intercept determination information and said destination information.

34. The method of claim **33** wherein said IP communications include at least one of audio data, pure data, video data, multimedia data, text messaging data and instant messaging data.

35. The method of claim **34** further comprising responding to said routing message by communicating with the media relay to cause the media relay to:

establish a communication path for relaying IP communications between the subscriber and the another party; and

when said intercept determination information and said destination information are included in said routing message, produce a copy of said IP communications between the subscriber and the another party, while the media relay relays communications between the subscriber and the another party; and

send said copy to a mediation device identified by said destination information in said routing message.

36. The method of claim **34** further comprising associating said determination information and said destination information with said dialing profile when communications involving said subscriber are not in progress.

37. The method of claim **34** further comprising associating said determination information and said destination information with said subscriber dialing profile when communications involving said subscriber are in progress.

38. The method of claim **36** wherein associating said determination information and said destination information comprises populating intercept information fields in said dialing profile of a subscriber whose communications are to be monitored.

39. The method of claim **37** wherein associating said determination information and said destination information comprises populating intercept information fields in said dialing profile of a subscriber whose communications are to be monitored.

40. The method of claim **39** wherein determining whether said determination information meets said intercept criteria comprises determining whether a current date and time is within a range specified by said determination information.

41. The method of claim **40** wherein producing said routing message comprises identifying a media relay through which communications involving said subscriber will be conducted and including an identification of said media relay in said routing message.

42. The method of claim **41** further comprising pre-associating at least one media relay with said dialing profile associated with the subscriber whose communications are to be monitored and wherein identifying said media relay comprises identifying said at least one media relay pre-associated with said subscriber whose communications are to be monitored.

43. The method of claim **42** wherein pre-associating comprises populating media relay fields in said dialing profile with an identification of said at least one media relay.

44. The method of claim **37** wherein associating said determination information and said destination information comprises associating said determination information and said destination information with said dialing profile of the subscriber whose communications are to be monitored, in response to receipt of an intercept request message, wherein said intercept request message comprises said determination information and said destination information.

45. The method of claim **44** further comprising invoking an intercept request message handler to:

a) find a dialing profile associated with the subscriber whose communications are to be monitored;

b) associate said determination information and said destination information with said dialing profile; and

c) identify a media relay through which said communications are being conducted.

46. The method of claim **45** wherein said dialing profile includes a username identifier and further comprising maintaining active call records for communications in progress, said active call records comprising a username identifier and a media relay identifier identifying the media relay through which said communications are being conducted and wherein identifying a media relay through which said communications are being conducted comprises locating an active call record associated with a channel used by the subscriber whose communications are to be monitored to identify the media relay associated with said channel.

47. The method of claim **46** further comprising maintaining direct-inward-dial (DID) records associating Public Switched Telephone Network (PSTN) telephone numbers with usernames of users subscribing to said IP network, and wherein finding a dialing profile associated with the subscriber whose communications are to be monitored comprises finding a username in a DID record bearing a PSTN number associated with the subscriber whose communications are to be monitored and using said username to locate a dialing profile associated with said username.

48. The method of claim **35** further comprising causing the call controller to receive communications from the mediation device to cause the dialing profile of a subscriber whose communications are to be monitored and to receive said intercept determination information and destination information.

* * * * *