US009168001B2

(12) **United States Patent**
Stivoric et al.

(10) **Patent No.: US 9,168,001 B2**
(45) **Date of Patent: Oct. 27, 2015**

(54) **ADHESIVELY MOUNTED APPARATUS FOR DETERMINING PHYSIOLOGICAL AND CONTEXTUAL STATUS**

(71) Applicant: **BodyMedia, Inc.**, Pittsburgh, PA (US)

(72) Inventors: **John M. Stivoric**, Pittsburgh, PA (US); **Scott K. Boehmke**, Wexford, PA (US); **Eric Teller**, Palo Alto, CA (US); **Christopher Kasabach**, New York, NY (US)

(73) Assignee: **BodyMedia, Inc.**, San Francisco, CA (US)

(*) Notice: Subject to any disclaimer, the term of this patent is extended or adjusted under 35 U.S.C. 154(b) by 0 days.

(21) Appl. No.: **14/058,563**

(22) Filed: **Oct. 21, 2013**

(65) **Prior Publication Data**

US 2014/0180023 A1 Jun. 26, 2014

Related U.S. Application Data

(60) Division of application No. 11/239,748, filed on Sep. 30, 2005, which is a continuation of application No. 10/227,575, filed on Aug. 22, 2002, now Pat. No. 7,020,508.

(51) **Int. Cl.**
A61B 5/02 (2006.01)
A61B 5/00 (2006.01)
(Continued)

(52) **U.S. Cl.**
CPC ***A61B 5/6802*** (2013.01); ***A61B 5/0022*** (2013.01); ***A61B 5/0082*** (2013.01);
(Continued)

(58) **Field of Classification Search**
CPC A61B 2560/0252; A61B 2560/0295; A61B 2562/08; A61B 5/0022; A61B 5/0082; A61B 5/01; A61B 5/0205; A61B 5/02055; A61B 5/02438; A61B 5/0408; A61B 5/0533; A61B 5/0537; A61B 5/1102; A61B 5/1118; A61B 5/145; A61B 5/14532; A61B 5/14542; A61B 5/1468; A61B 5/411; A61B 5/4809; A61B 5/4866; A61B 5/6802; A61B 5/6804; A61B 5/681; A61B 5/6831; A61B 5/6832; A61B 5/7207; A61B 5/7275; A61B 5/7278; A61B 5/7282; A61B 5/742; A61B 5/7445; A61B 7/7455; A61B 5/7475; A61B 7/04
USPC 600/508
See application file for complete search history.

(56) **References Cited**

U.S. PATENT DOCUMENTS

3,870,034 A 3/1975 James
3,967,628 A * 7/1976 Vredenbregt 607/149
(Continued)

FOREIGN PATENT DOCUMENTS

BR 00010758 11/2001
CH 579798 A5 9/1976
(Continued)

OTHER PUBLICATIONS

Industrial Micro-Foil Heat Flux Sensor, RdF Corporation Datasheet No. HFS-B, Mar. 1998.
(Continued)

Primary Examiner — George Manuel
(74) *Attorney, Agent, or Firm* — Kokka & Backus, PC

(57) **ABSTRACT**

The invention comprises an apparatus for determining the contextual or physiological status of the individual wearing the apparatus. The apparatus is designed to be consumable or disposable. In most embodiments the invention comprises an adhesive housing. In some embodiments, two different sensors are secured to the housing. The apparatus is in electronic communication with a processing unit that can derive analytical status data by using the data received from the two sensors. In some embodiments, the processing unit is programmed to control other devices, or is programmed to trigger an event. In still other embodiments, the apparatus is in electronic communication with a separate computing device, which may contain the processing unit.

31 Claims, 37 Drawing Sheets

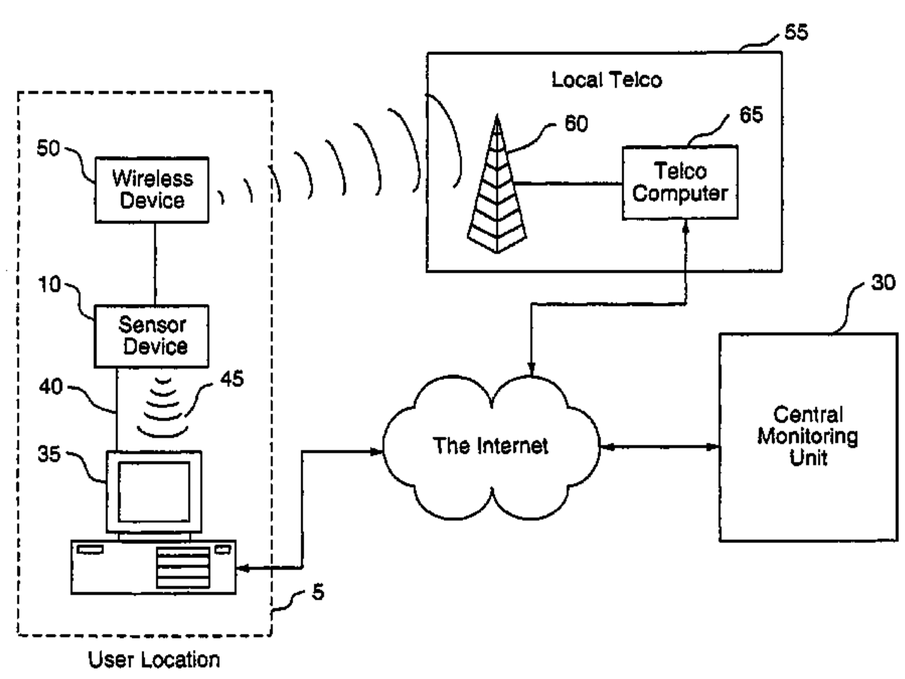

(51) **Int. Cl.**

A61B 5/0205	(2006.01)
A61B 5/024	(2006.01)
A61B 5/053	(2006.01)
A61B 5/145	(2006.01)
A61B 5/01	(2006.01)
A61B 5/0408	(2006.01)
A61B 5/11	(2006.01)
A61B 5/1468	(2006.01)
A61B 7/04	(2006.01)

(52) **U.S. Cl.**

CPC ***A61B 5/01*** (2013.01); ***A61B 5/0205*** (2013.01); ***A61B 5/02055*** (2013.01); ***A61B 5/02438*** (2013.01); ***A61B 5/0408*** (2013.01); ***A61B 5/0533*** (2013.01); ***A61B 5/0537*** (2013.01); ***A61B 5/1102*** (2013.01); ***A61B 5/1118*** (2013.01); ***A61B 5/145*** (2013.01); ***A61B 5/1468*** (2013.01); ***A61B 5/14532*** (2013.01); ***A61B 5/14542*** (2013.01); ***A61B 5/411*** (2013.01); ***A61B 5/4809*** (2013.01); ***A61B 5/4866*** (2013.01); ***A61B 5/681*** (2013.01); ***A61B 5/6804*** (2013.01); ***A61B 5/6831*** (2013.01); ***A61B 5/6832*** (2013.01); ***A61B 5/7207*** (2013.01); ***A61B 5/7278*** (2013.01); ***A61B 5/7282*** (2013.01); ***A61B 5/742*** (2013.01); ***A61B 5/7445*** (2013.01); ***A61B 5/7455*** (2013.01); ***A61B 5/7475*** (2013.01); ***A61B 7/04*** (2013.01); *A61B 5/7275* (2013.01); *A61B 2560/0252* (2013.01); *A61B 2560/0295* (2013.01); *A61B 2562/08* (2013.01)

(56) **References Cited**

U.S. PATENT DOCUMENTS

4,038,976	A *	8/1977	Hardy et al.	600/503
4,129,125	A	12/1978	Lester et al.	
4,148,304	A	4/1979	Mull	
4,151,831	A	5/1979	Lester	
4,192,000	A	3/1980	Lipsey	
4,364,398	A	12/1982	Sassi et al.	
4,377,171	A	3/1983	Wada	
4,407,295	A	10/1983	Steuer et al.	
4,488,558	A	12/1984	Simbruner et al.	
4,509,531	A	4/1985	Ward	
4,531,527	A	7/1985	Reinhold, Jr. et al.	
4,539,994	A	9/1985	Baumbach et al.	
4,557,273	A	12/1985	Stoller et al.	
4,608,987	A	9/1986	Mills	
4,622,979	A	11/1986	Katchis et al.	
4,627,738	A	12/1986	Kao	
4,672,977	A	6/1987	Kroll	
4,676,254	A	6/1987	Frohn	
4,757,453	A	7/1988	Nasiff	
RE32,758	E	10/1988	Zartman	
4,784,162	A	11/1988	Ricks et al.	
4,803,625	A	2/1989	Fu et al.	
4,819,860	A	4/1989	Hargrove et al.	
4,827,943	A	5/1989	Bornn et al.	
4,828,257	A	5/1989	Dyer et al.	
4,883,063	A	11/1989	Bernard et al.	
4,891,756	A	1/1990	Williams, III	
4,917,108	A	4/1990	Mault	
4,958,645	A	9/1990	Cadell et al.	
4,966,154	A	10/1990	Cooper et al.	
4,981,139	A	1/1991	Pfohl	
5,007,427	A	4/1991	Suzuki et al.	
5,012,411	A	4/1991	Policastro et al.	
5,027,824	A	7/1991	Dougherty et al.	
5,038,792	A	8/1991	Mault	
5,040,541	A	8/1991	Poppendiek	
5,050,612	A	9/1991	Matsumura	
5,072,458	A	12/1991	Suzuki	
5,111,818	A	5/1992	Suzuki et al.	
5,135,311	A	8/1992	Alpert	
5,148,002	A	9/1992	Kuo et al.	
5,178,155	A	1/1993	Mault	
5,179,958	A	1/1993	Mault	
5,216,599	A	6/1993	Uebe et al.	
5,224,479	A	7/1993	Sekine	
5,263,491	A	11/1993	Thornton	
5,285,398	A	2/1994	Janik	
5,305,244	A	4/1994	Newman et al.	
5,335,664	A	8/1994	Nagashima	
5,353,793	A	10/1994	Bornn	
5,410,471	A	4/1995	Alyfuku et al.	
5,435,315	A	7/1995	McPhee et al.	
5,445,149	A	8/1995	Rotolo et al.	
5,458,123	A	10/1995	Unger	
5,474,090	A	12/1995	Begun et al.	
5,476,103	A	12/1995	Nahsner	
5,484,389	A	1/1996	Stark et al.	
5,491,651	A	2/1996	Janik	
5,507,288	A	4/1996	Boecker et al.	
5,511,553	A	4/1996	Segalowitz	
5,515,858	A	5/1996	Myllymaeki	
5,515,865	A	5/1996	Scanlon	
5,523,730	A	6/1996	Van Zeeland	
5,524,618	A	6/1996	Pottgen et al.	
5,555,490	A	9/1996	Carroll	
5,559,497	A	9/1996	Hong	
5,564,429	A	10/1996	Bornn et al.	
5,566,679	A	10/1996	Herriott	
5,581,238	A	12/1996	Chang et al.	
5,581,492	A	12/1996	Janik	
5,583,758	A	12/1996	McIlroy et al.	
5,611,085	A	3/1997	Rasmussen	
5,617,477	A	4/1997	Boyden	
5,622,180	A	4/1997	Tammi et al.	
5,645,068	A	7/1997	Mezack et al.	
5,652,570	A	7/1997	Lepkofker	
5,663,703	A	9/1997	Pearlman et al.	
5,666,096	A	9/1997	Van Zeeland	
5,670,944	A	9/1997	Myllymaki	
5,673,691	A	10/1997	Abrams et al.	
5,673,692	A	10/1997	Schulze et al.	
5,686,516	A	11/1997	Tzur	
5,687,734	A	11/1997	Dempsey et al.	
5,697,791	A	12/1997	Nashner et al.	
5,701,894	A	12/1997	Cherry et al.	
5,704,350	A	1/1998	Williams, III	
5,719,743	A	2/1998	Jenkins et al.	
5,720,770	A	2/1998	Nappholz et al.	
5,724,025	A	3/1998	Tavori	
5,726,631	A	3/1998	Lin	
5,729,203	A	3/1998	Oka et al.	
5,730,140	A	3/1998	Fitch	
5,738,104	A	4/1998	Lo et al.	
5,741,217	A	4/1998	Gero	
5,752,976	A	5/1998	Duffin et al.	
5,771,001	A	6/1998	Cobb	
5,778,882	A	7/1998	Raymond et al.	
5,798,907	A	8/1998	Janik	
5,803,915	A	9/1998	Kremenchugsky et al.	
5,813,766	A	9/1998	Chen	
5,813,994	A	9/1998	Pottgen et al.	
5,823,975	A	10/1998	Stark et al.	
5,827,180	A	10/1998	Goodman	
5,828,943	A	10/1998	Brown	
5,832,296	A	11/1998	Wang et al.	
5,832,448	A	11/1998	Brown	
5,836,300	A	11/1998	Mault	
5,839,901	A	11/1998	Karkanen	
5,853,005	A	12/1998	Scanlon	
5,855,550	A	1/1999	Lai et al.	
5,857,939	A	1/1999	Kaufman	
5,857,967	A	1/1999	Frid et al.	
5,862,803	A	1/1999	Besson et al.	
5,865,733	A	2/1999	Malinouskas et al.	
5,868,669	A	2/1999	Iliff	
5,868,671	A	2/1999	Mahoney	

(56) **References Cited**

U.S. PATENT DOCUMENTS

5,871,451 A 2/1999 Unger et al.
5,876,350 A 3/1999 Lo et al.
5,879,163 A 3/1999 Brown et al.
5,879,309 A 3/1999 Johnson et al.
5,884,198 A 3/1999 Kese et al.
5,888,172 A 3/1999 Andrus et al.
5,897,493 A 4/1999 Brown
5,899,855 A 5/1999 Brown
5,902,250 A 5/1999 Verrier et al.
5,908,396 A 6/1999 Hayakawa et al.
5,912,865 A 6/1999 Ortega
5,913,310 A 6/1999 Brown
5,919,141 A 7/1999 Money et al.
5,929,782 A 7/1999 Stark et al.
5,931,791 A 8/1999 Saltzstein et al.
5,933,136 A 8/1999 Brown
5,941,837 A 8/1999 Amano et al.
5,944,661 A * 8/1999 Swette et al. 600/345
5,951,300 A 9/1999 Brown
5,956,501 A 9/1999 Brown
5,957,854 A 9/1999 Besson et al.
5,959,529 A 9/1999 Kail, IV
5,959,611 A 9/1999 Smailagic et al.
5,960,380 A 9/1999 Flentov et al.
5,960,403 A 9/1999 Brown
5,976,083 A 11/1999 Richardson et al.
5,989,157 A 11/1999 Walton
5,990,772 A 11/1999 Van Zeeland
6,013,007 A 1/2000 Root et al.
6,030,342 A 2/2000 Amano et al.
6,032,119 A 2/2000 Brown et al.
6,047,203 A 4/2000 Sackner et al.
6,053,872 A 4/2000 Mohler
6,059,692 A 5/2000 Hickman
6,067,468 A 5/2000 Korenman et al.
6,069,552 A 5/2000 Van Zeeland
6,091,973 A 7/2000 Colla et al.
6,095,949 A 8/2000 Arai
6,101,407 A 8/2000 Groezinger
6,101,478 A 8/2000 Brown
6,126,595 A 10/2000 Amano et al.
6,135,107 A 10/2000 Mault
6,138,079 A 10/2000 Putnam
6,154,668 A 11/2000 Pedersen et al.
6,168,563 B1 1/2001 Brown
6,184,797 B1 2/2001 Stark et al.
6,190,314 B1 2/2001 Ark et al.
6,198,394 B1 3/2001 Jacobsen et al.
6,208,900 B1 3/2001 Ecker et al.
6,225,901 B1 5/2001 Kail, IV
6,225,980 B1 5/2001 Weiss et al.
6,247,647 B1 6/2001 Courtney et al.
6,248,065 B1 6/2001 Brown
6,251,048 B1 6/2001 Kaufman
6,254,536 B1 7/2001 DeVito
6,265,978 B1 7/2001 Atlas
6,266,623 B1 7/2001 Vock et al.
6,285,897 B1 9/2001 Kilcoyne et al.
6,287,252 B1 9/2001 Lugo
6,290,646 B1 9/2001 Cosentino et al.
6,290,650 B1 9/2001 Butterfield et al.
6,292,698 B1 9/2001 Duffin et al.
6,298,218 B1 10/2001 Lowe et al.
6,302,844 B1 10/2001 Walker et al.
6,305,071 B1 10/2001 Van Zeeland
6,306,088 B1 10/2001 Krausman et al.
6,307,384 B2 10/2001 Havey et al.
6,312,363 B1 11/2001 Watterson et al.
6,315,719 B1 11/2001 Rode et al.
6,327,495 B1 12/2001 Iwabuchi et al.
6,336,900 B1 1/2002 Alleckson et al.
6,339,720 B1 1/2002 Anzellini et al.
6,341,229 B1 1/2002 Akiva
6,364,834 B1 4/2002 Reuss et al.
6,366,871 B1 4/2002 Geva
6,368,287 B1 4/2002 Hadas
6,371,123 B1 4/2002 Stark et al.
6,377,162 B1 4/2002 Delestienne et al.
6,385,473 B1 5/2002 Haines et al.
6,392,515 B1 5/2002 Van Zeeland et al.
6,416,471 B1 7/2002 Kumar et al.
6,420,959 B1 7/2002 Lizzi
6,450,922 B1 9/2002 Henderson et al.
6,450,953 B1 9/2002 Place et al.
6,454,707 B1 9/2002 Casscells, III et al.
6,454,708 B1 9/2002 Ferguson et al.
6,466,232 B1 10/2002 Newell et al.
6,468,222 B1 10/2002 Mault et al.
6,478,736 B1 11/2002 Mault
6,494,829 B1 12/2002 New, Jr. et al.
6,513,532 B2 2/2003 Mault et al.
6,514,200 B1 2/2003 Khouri
6,516,289 B2 2/2003 David
6,527,711 B1 3/2003 Stivoric et al.
6,532,381 B2 3/2003 Bayer et al.
6,533,731 B2 3/2003 Pottgen et al.
6,539,336 B1 3/2003 Vock et al.
6,547,745 B1 4/2003 Rubinstein
6,551,251 B2 4/2003 Zuckerwar et al.
6,558,320 B1 5/2003 Causey, III et al.
6,569,094 B2 5/2003 Suzuki et al.
6,571,200 B1 5/2003 Mault
6,579,231 B1 6/2003 Phipps
6,584,344 B2 6/2003 Hannula
6,595,929 B2 7/2003 Stivoric et al.
6,597,944 B1 7/2003 Hadas
6,605,038 B1 8/2003 Teller et al.
6,607,484 B2 8/2003 Suzuki et al.
6,610,012 B2 8/2003 Mault
6,611,206 B2 8/2003 Eshelman et al.
6,616,613 B1 9/2003 Goodman
6,635,015 B2 10/2003 Sagel
6,656,125 B2 12/2003 Misczynski et al.
6,665,559 B2 12/2003 Rowlandson
6,690,959 B2 2/2004 Thompson
6,694,182 B1 2/2004 Yamazaki et al.
6,712,615 B2 3/2004 Martin
6,734,802 B2 5/2004 Halleck et al.
6,755,795 B2 6/2004 Marmaropoulos et al.
6,790,178 B1 9/2004 Mault et al.
6,808,473 B2 10/2004 Hisano et al.
6,817,979 B2 11/2004 Nihtilä
6,834,436 B2 12/2004 Townsend et al.
6,842,877 B2 1/2005 Robarts et al.
6,852,085 B2 2/2005 Rubinstein
6,874,127 B2 3/2005 Newell et al.
6,920,348 B2 7/2005 Vasin et al.
6,942,615 B2 9/2005 Suzuki et al.
6,959,259 B2 10/2005 Vock et al.
6,968,375 B1 11/2005 Brown
7,020,508 B2 3/2006 Stivoric et al.
7,073,129 B1 7/2006 Robarts et al.
7,092,846 B2 8/2006 Vock et al.
7,171,331 B2 1/2007 Vock et al.
7,285,090 B2 10/2007 Stivoric et al.
7,454,002 B1 11/2008 Gardner et al.
7,485,095 B2 2/2009 Shusterman
7,676,384 B2 3/2010 Baker et al.
8,374,688 B2 2/2013 Libbus et al.
2001/0029340 A1 10/2001 Mault et al.
2001/0032059 A1 10/2001 Kelly, Jr. et al.
2001/0044581 A1 11/2001 Mault
2001/0044588 A1 11/2001 Mault
2001/0049470 A1 12/2001 Mault et al.
2001/0056229 A1 12/2001 Cosentino et al.
2002/0019296 A1 2/2002 Freeman et al.
2002/0019586 A1 2/2002 Teller et al.
2002/0027164 A1 3/2002 Mault et al.
2002/0028988 A1 3/2002 Suzuki et al.
2002/0028995 A1 3/2002 Mault
2002/0032386 A1 3/2002 Sackner et al.
2002/0035340 A1 3/2002 Fraden et al.
2002/0055857 A1 5/2002 Mault
2002/0062069 A1 5/2002 Mault

(56) **References Cited**

U.S. PATENT DOCUMENTS

2002/0088160	A1	7/2002	Beretta
2002/0107450	A1	8/2002	Ogura
2002/0111539	A1	8/2002	Cosentino et al.
2002/0128804	A1	9/2002	Geva
2002/0133378	A1	9/2002	Mault et al.
2002/0169634	A1	11/2002	Nishi et al.
2003/0055460	A1	3/2003	Owen et al.
2003/0069510	A1	4/2003	Semler
2003/0083559	A1	5/2003	Thompson
2003/0149349	A1	8/2003	Jensen
2003/0152607	A1	8/2003	Mault
2003/0176797	A1	9/2003	Anzellini
2003/0208113	A1	11/2003	Mault et al.
2004/0102931	A1	5/2004	Ellis et al.
2005/0070778	A1	3/2005	Lackey et al.
2005/0101841	A9	5/2005	Kaylor et al.
2005/0226310	A1	10/2005	Nakazawa et al.
2006/0031102	A1	2/2006	Teller et al.
2006/0122474	A1	6/2006	Teller et al.
2006/0293921	A1	12/2006	McCarthy et al.
2007/0173705	A1	7/2007	Teller et al.
2008/0287751	A1	11/2008	Stivoric et al.
2008/0287817	A1	11/2008	Stivoric et al.
2014/0180020	A1	6/2014	Stivoric et al.
2014/0180021	A1	6/2014	Stivoric et al.
2014/0180022	A1	6/2014	Stivoric et al.
2014/0180137	A1	6/2014	Stivoric et al.

FOREIGN PATENT DOCUMENTS

DE	19832361	A1	2/2000
DE	19911766	A1	9/2000
EP	670064	A1	9/1995
EP	707825	A2	4/1996
EP	880936	A2	12/1998
EP	2491857	A2	8/2012
GB	2322952	A	9/1998
HK	1175091	A	6/2013
JP	02114009	A	4/1990
JP	04341243	A	11/1992
JP	6-7307		1/1994
JP	06319723	A	11/1994
JP	09056705		3/1997
JP	10118052	A	5/1998
JP	10295651	A	11/1998
JP	10305016	A	11/1998
JP	10305072	A	11/1998
JP	2002095637	A	4/2002
KR	200244874	Y1	8/2001
WO	9301574	A1	1/1993
WO	9425841	A1	11/1994
WO	9706499	A1	2/1997
WO	9747239	A1	12/1997
WO	9850873	A1	11/1998
WO	9927483	A1	6/1999
WO	9944494	A1	9/1999
WO	9959465	A1	11/1999
WO	0011578	A1	3/2000
WO	0026882	A2	5/2000
WO	0032098	A1	6/2000
WO	0047108	A1	8/2000
WO	0051543	A2	9/2000
WO	0052604	A1	9/2000
WO	0108554	A1	2/2001
WO	0126535	A2	4/2001
WO	0126547	A1	4/2001
WO	0128416	A1	4/2001
WO	0128495	A2	4/2001
WO	0139089	A1	5/2001
WO	0141645	A1	6/2001
WO	0152718	A2	7/2001
WO	0156454	A2	8/2001
WO	0182783	A2	11/2001
WO	0182789	A2	11/2001
WO	0189365	A2	11/2001
WO	0189368	A2	11/2001
WO	0189368	A3	3/2002
WO	0189365	A3	4/2002
WO	02051308	A1	7/2002
WO	02069798	A1	9/2002
WO	02093272	A1	11/2002
WO	2005046433	A2	5/2005

OTHER PUBLICATIONS

Polar USA—Product Detail—M91ti, (downloaded from www.polarusa.com), Polar USA, Oct. 4, 2002.

Polar USA- Product Detail- S-610 (downloaded from www.polarusa.com), Polar USA, Oct. 4, 2002.

Weight Watchers TurnAround, Weight Watchers, (downloaded from www.weightwatchers.com, 2004.

Micro-Foil Heat Flux Sensors, RdF Corporation Catalog No. HFS-A, Mar. 1998.

Warfighter Physiological Status Monitoring. MOMRP Fact Sheet No. 6. USAMRMC Military Operational Medicine Research Program. [Retrieved on May 5, 2003]. Retrieved from Internet. URL: <http://www.momrp.org/publications/WPSM.pdf >., Aug. 9, 1999.

"CoolPoly, the Original Thermally Conductive Polymer", (article downloaded from www.coolpolymers.com), Feb. 7, 2001.

"CYBeR-CARE Announces U.S. Patent Office Allows 25 Additional Claims for its Internet Healthcare Technologies", BW Health Wire, Oct. 7, 1999.

"Estee Soft Announces New Version ofLifeConnect, Providing Advanced Telemonitoring Capabilities for the Mobile Practitioner", Business Wire, Jan. 20, 1999.

"FDA Clears New Datex-Ohmeda 3900/3900P Pulse Oximeter With World's First Remote Fax Capability", BW Health Wire, Dec. 3, 1998.

"Georgia Tech Researchers Develop First 'SmartT-shirt", press release, Georgia Institute of Technology, Nov. 14, 1997.

"Industrial Micro-Foil Heat Flux Sensors Models 27060 & 27070", Datasheet No. HFS-B, RdF Corporation, Oct. 1995.

"Ironman Speed and Distance System", (downloaded from www.timex.com), Timex, Oct. 4, 2002.

"Matsushita Electric Works to Sell Home Health Check System", The Nihon Keizai Shimbun, Dec. 17, 1998.

"The Complete Nutrition & Weight Management Solution Based on Your Unique Metabolic Fingerprint & Goals", BalanceLog, (downloaded from www. healthetech. com), 2004.

"What is FitDay?", FitDay, (downloaded from www.fitday.com), 2004.

03793253.0, "European Application Serial No. 03793253.0, Supplementary European Search Report mailed May 8, 2008", Bodymedia, Inc., 3 pages.

12161108.1, "European Application Serial No. 12161108.1, Extended European Search Report mailed Aug. 23, 2012", 6.

Craig, Weight Loss Programs, (downloaded from wwwjennycraig.com), 2004.

Henshaw, et al., The H. J. Andrews Climatological Field Measurement Program . . . [Retrieved on May 5, 2003). Retrieved from Internet. URL: <http://www.fsl.orst.edu/Iter/research/component/climate/summary.cfm?sum=clim97&topnav=57>, Aug. 9, 1997.

Katz, "Once Again, Timex, Revolutionizes the Sportwatch", htto:www.timex.com/sod/oressrelease.html, Oct. 4, 2002, 3 pages.

Krebs, Brianna , "Nearer to the Heart", Washington Post, Jan. 17, 1999.

PCT/US2003/26261, "International Application Serial No. PCT/US2003/26261, International Search Report mailed Feb. 15, 2005", BodyMedia, Inc., 1 page.

Rennie, et al., "A combined heart rate and movement sensor: proof of concept and preliminary testing study", 2000.

THERM-A-GAP, "Interface Materials Highly Conformable, Thermally Conductive Gap Fillers", Chomerics Technical Bulletin 70, downloaded from chomerics' web site at www.chomerics.com/products/documents/tb70.pdf, Feb. 6, 2001.

Tuomisto, et al., "Personal Health Monitor for Homes", ERCIM News, No. 29, Apr. 1997.

(56) **References Cited**

OTHER PUBLICATIONS

Weekly, "Portable sensor provides remote monitoring of heart", Oct. 27, 1998.
Young, "Thermal Gap Fillers: New Material Overcomes Performance Trade-Offs", downloaded from Chomerics' website at www.chomerics.com/products/documents/Gap_Filler_ARticle_2.pdf, Feb. 6, 2001.
File History of U.S. Appl. No. 95/002,367, filed Sep. 14, 2012, 1,299 pages.
File History of U.S. Appl. No. 95/002,354, filed Sep. 14, 2012, 914 pages.
File History of U.S. Appl. No. 95/002,360, filed Sep. 14, 2012, 1,474 pages.
File History of U.S. Appl. No. 95/002,382, filed Sep. 14, 2012, 1,636 pages.
File History of U.S. Appl. No. 95/002,366, filed Sep. 14, 2012, 959 pages.
File History of U.S. Appl. No. 95/002,376, filed Sep. 14, 2012, 684 pages.
File History of U.S. Appl. No. 95/002,371, filed Sep. 14, 2012, 733 pages.

* cited by examiner

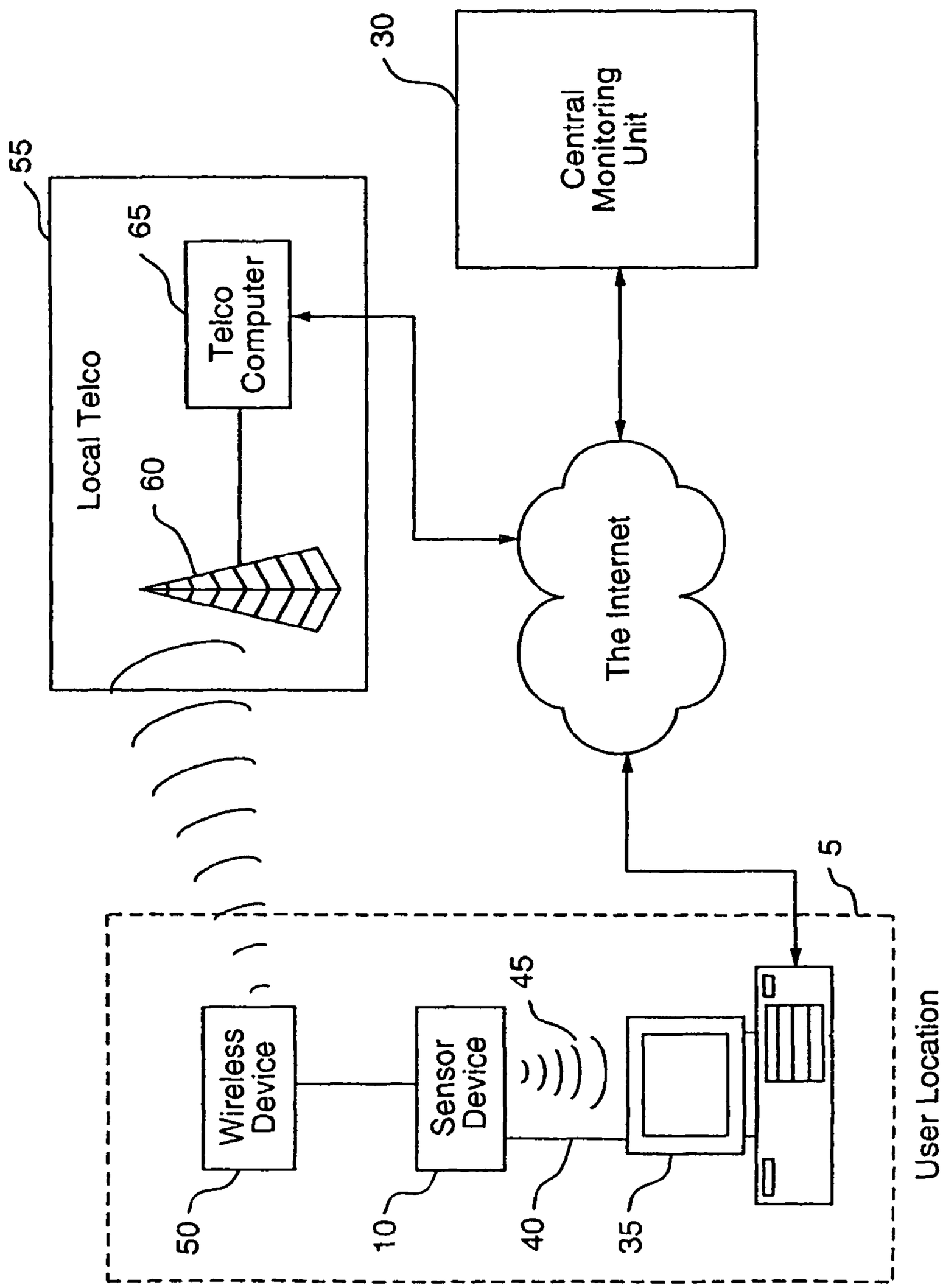
Central Monitoring Unit
30
Local Telco
55
Telco Computer
65
60
The Internet
5
Wireless Device
50
Sensor Device
10
45
40
35
User Location

FIG. 1

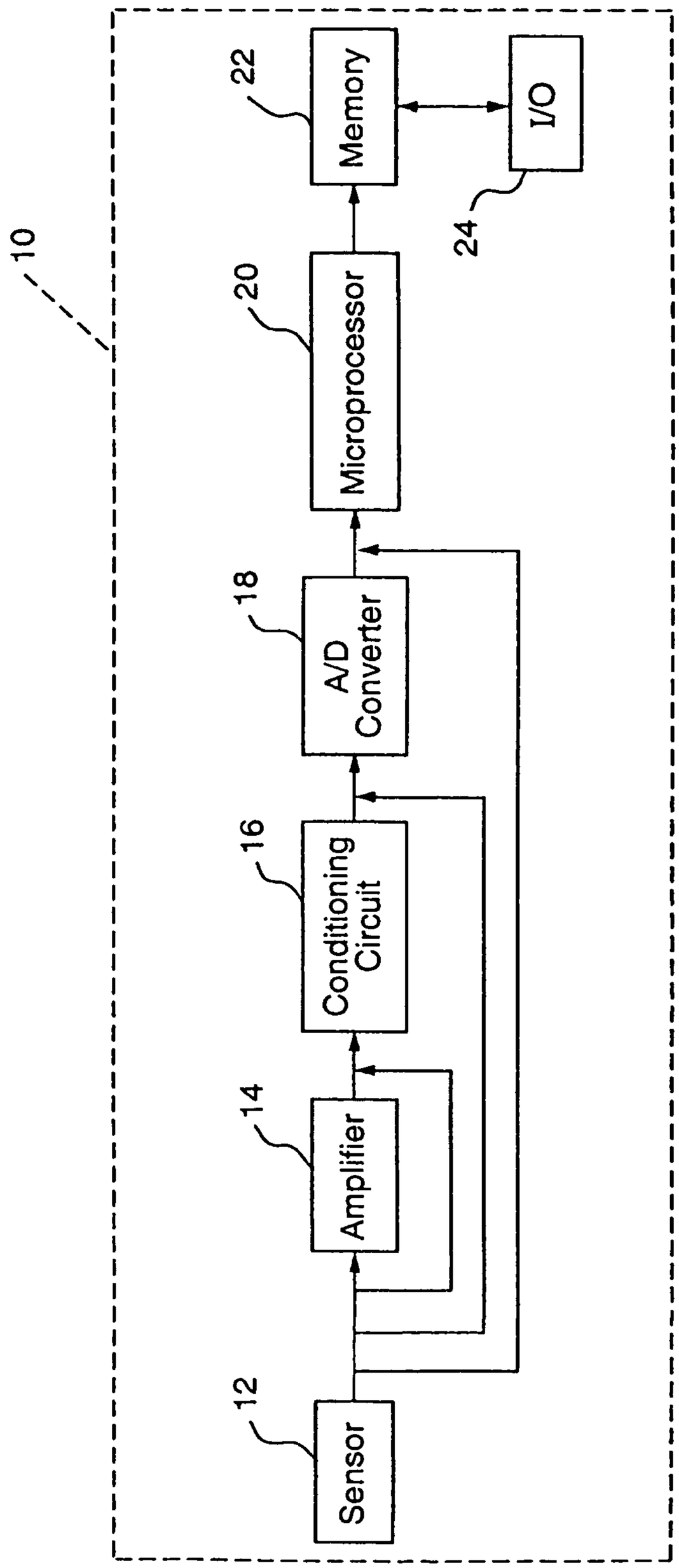
10
12
Sensor
14
Amplifier
16
Conditioning Circuit
18
A/D Converter
20
Microprocessor
22
Memory
24
I/O

FIG. 2

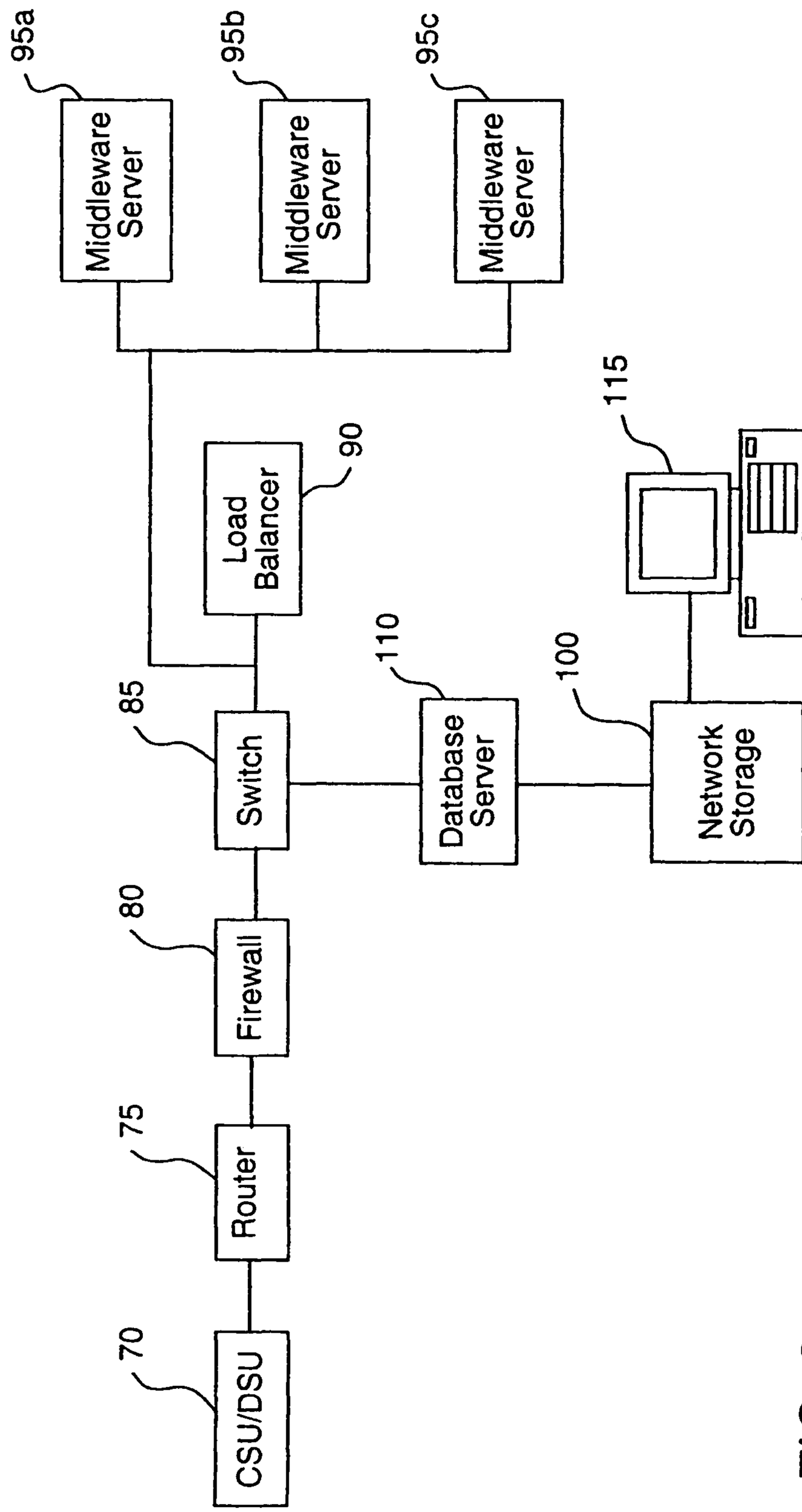
95a
Middleware Server
95b
Middleware Server
95c
Middleware Server
115
90
Load Balancer
110
100
85
Switch
Database Server
Network Storage
80
Firewall
75
Router
70
CSU/DSU

FIG. 3

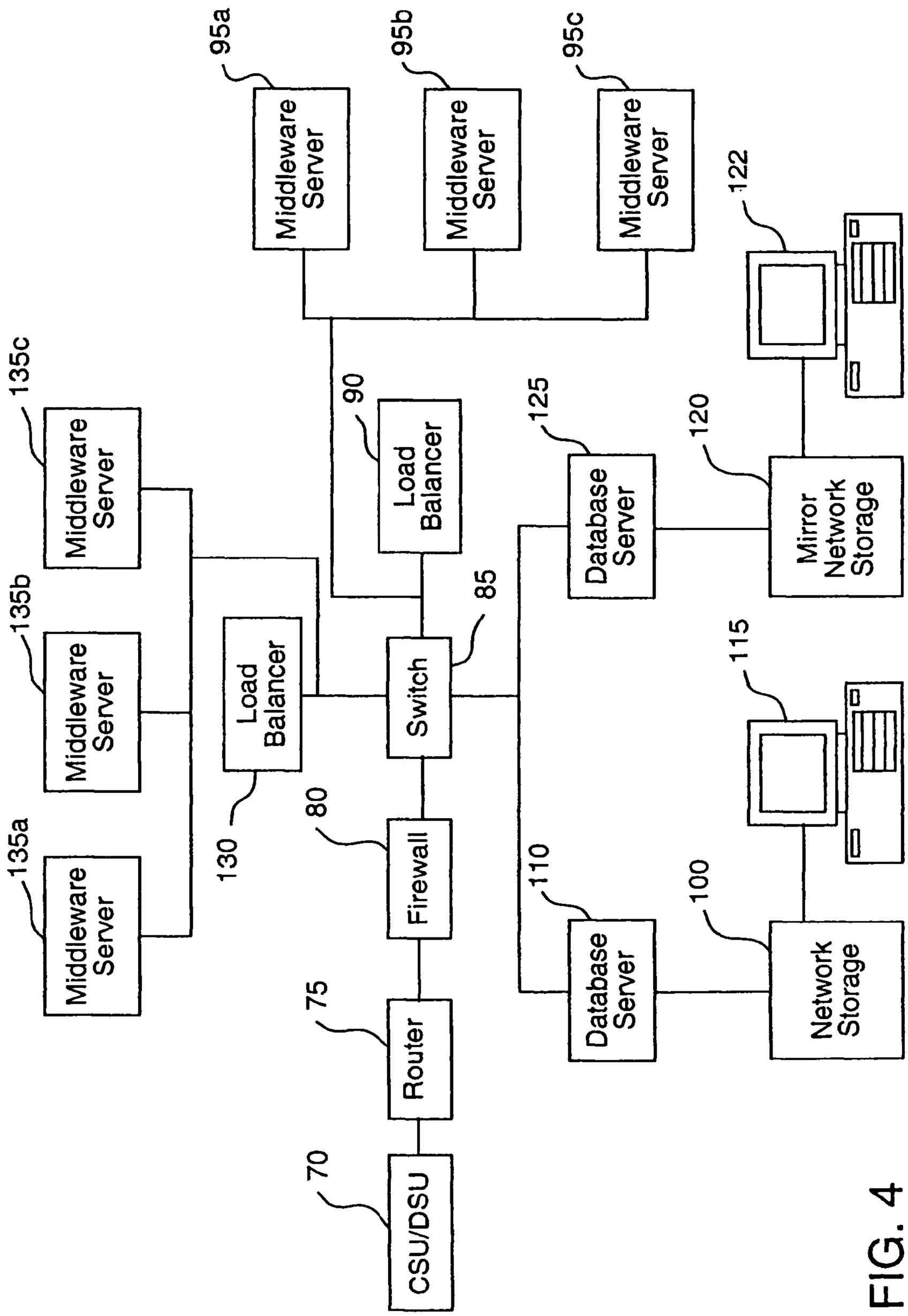
95a
Middleware Server
95b
Middleware Server
95c
Middleware Server
122
135c
Middleware Server
90
Load Balancer
125
Database Server
120
Mirror Network Storage
135b
Middleware Server
85
Switch
115
Load Balancer
130
80
Firewall
110
100
135a
Middleware Server
Database Server
Network Storage
75
Router
70
CSU/DSU

FIG. 4

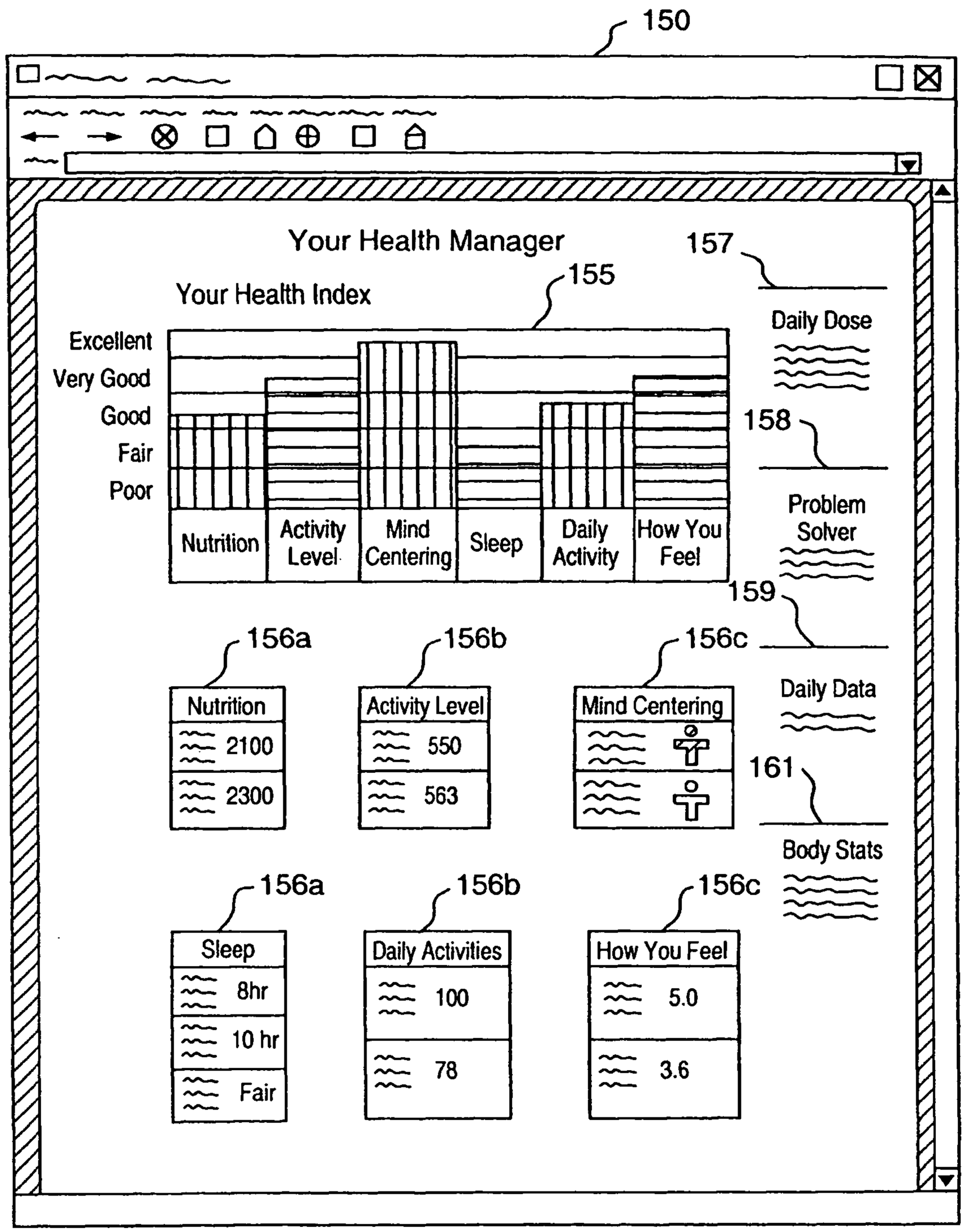
150
Your Health Manager
157
155
Your Health Index
Daily Dose
Excellent
Very Good
Good
Fair
Poor
158
Nutrition
Activity Level
Mind Centering
Sleep
Daily Activity
How You Feel
Problem Solver
159
156a
156b
156c
Nutrition
2100
2300
Activity Level
550
563
Mind Centering
Daily Data
161
Body Stats
156a
156b
156c
Sleep
8hr
10 hr
Fair
Daily Activities
100
78
How You Feel
5.0
3.6

FIG. 5

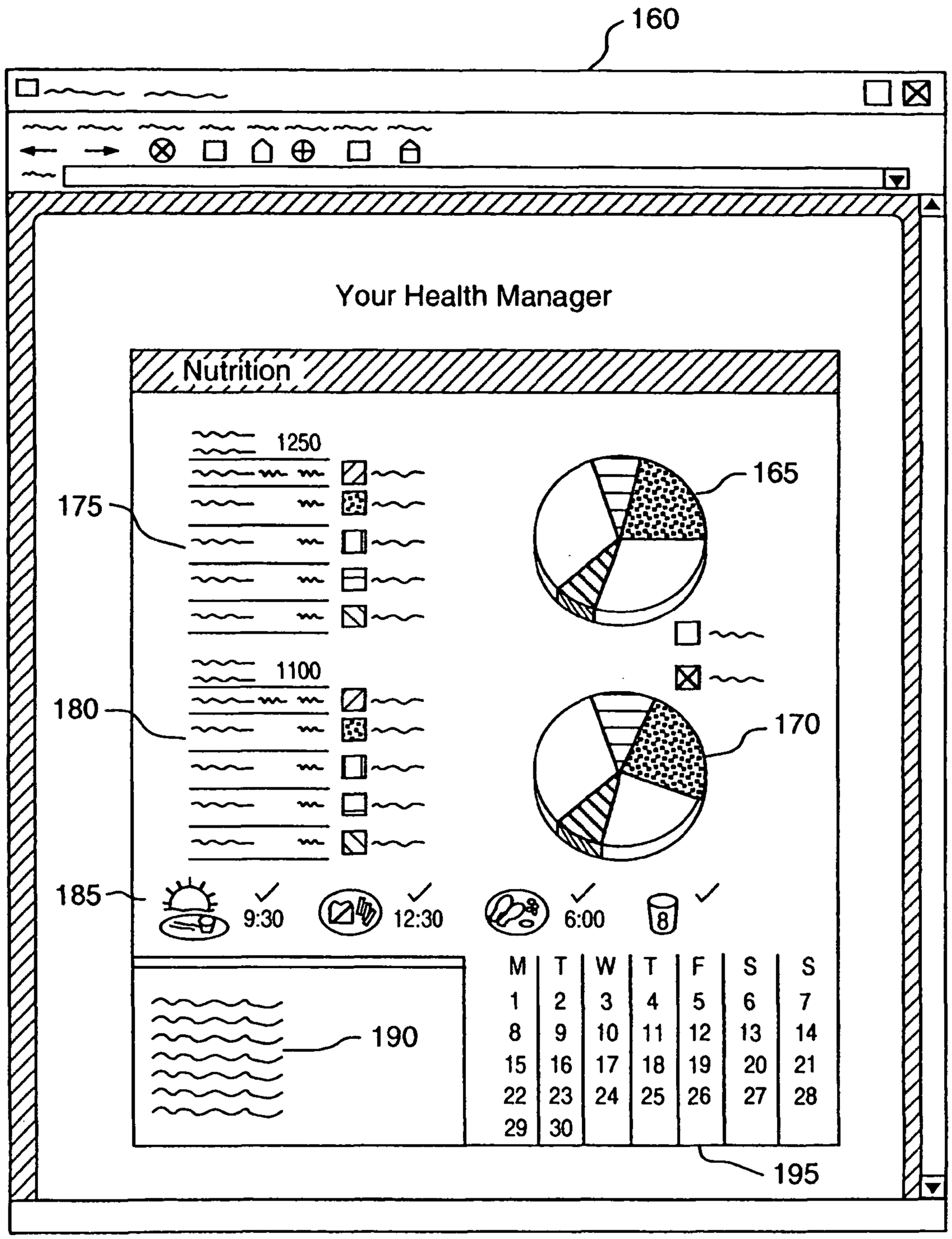
160
Your Health Manager
Nutrition
1250
175
165
1100
180
170
185
9:30
12:30
6:00
8
190
M T W T F S S
1 2 3 4 5 6 7
8 9 10 11 12 13 14
15 16 17 18 19 20 21
22 23 24 25 26 27 28
29 30
195

FIG. 6

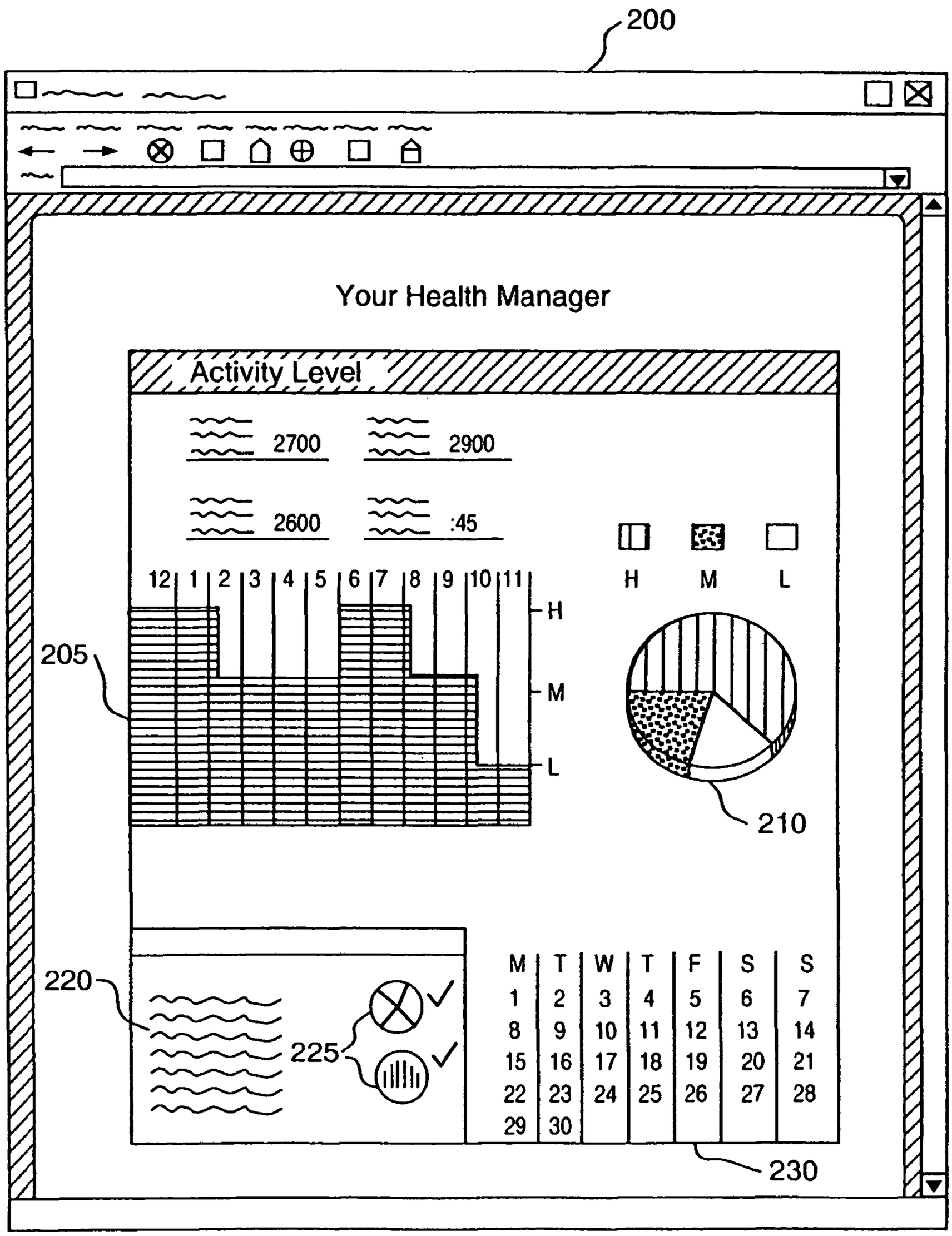
200
Your Health Manager
Activity Level
2700
2900
2600
:45
12 1 2 3 4 5 6 7 8 9 10 11
H
M
L
205
210
220
225
M T W T F S S
1 2 3 4 5 6 7
8 9 10 11 12 13 14
15 16 17 18 19 20 21
22 23 24 25 26 27 28
29 30
230

FIG. 7

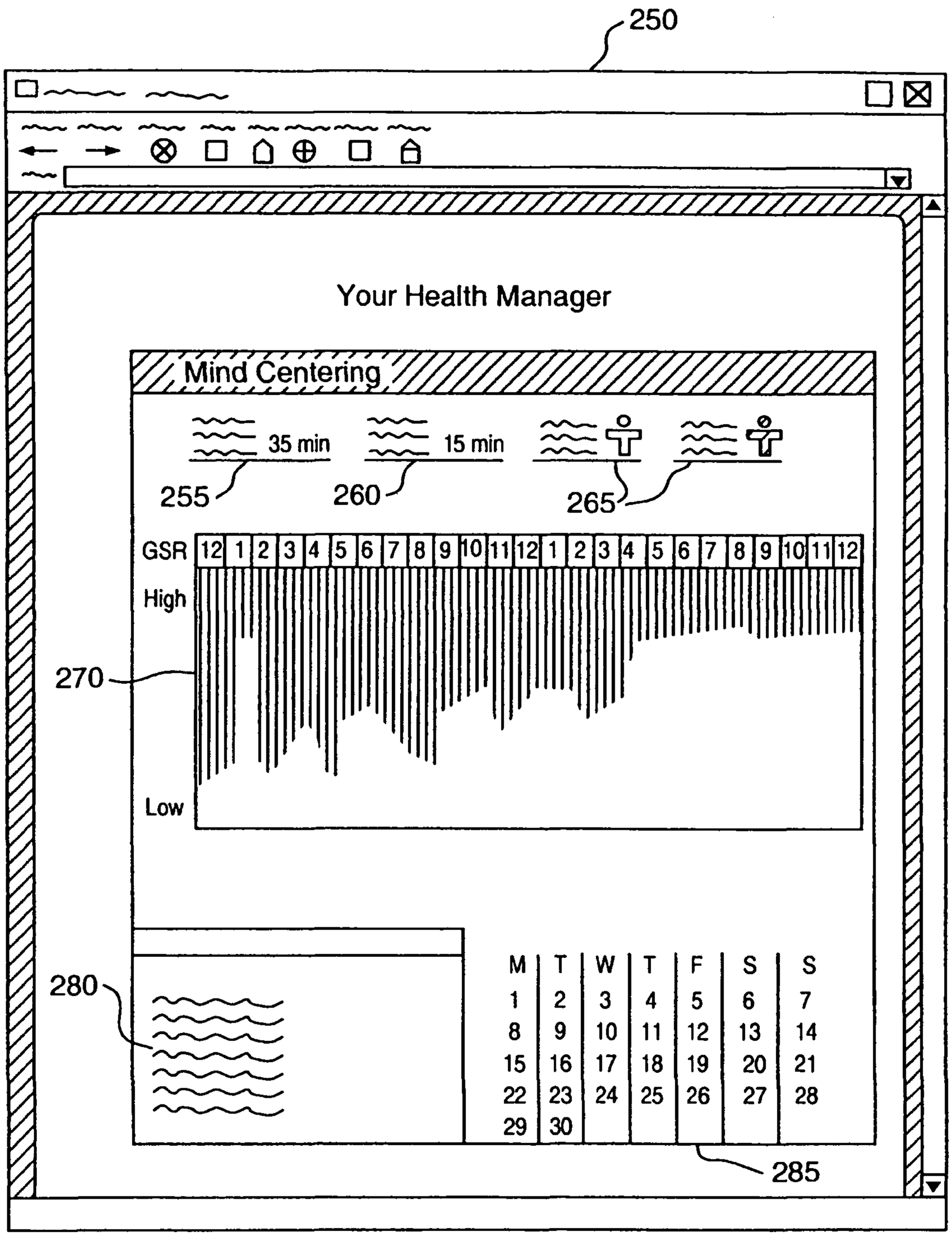
250
Your Health Manager
Mind Centering
35 min
15 min
255
260
265
GSR
12 1 2 3 4 5 6 7 8 9 10 11 12 1 2 3 4 5 6 7 8 9 10 11 12
High
Low
270
280
M T W T F S S
1 2 3 4 5 6 7
8 9 10 11 12 13 14
15 16 17 18 19 20 21
22 23 24 25 26 27 28
29 30
285

FIG. 8

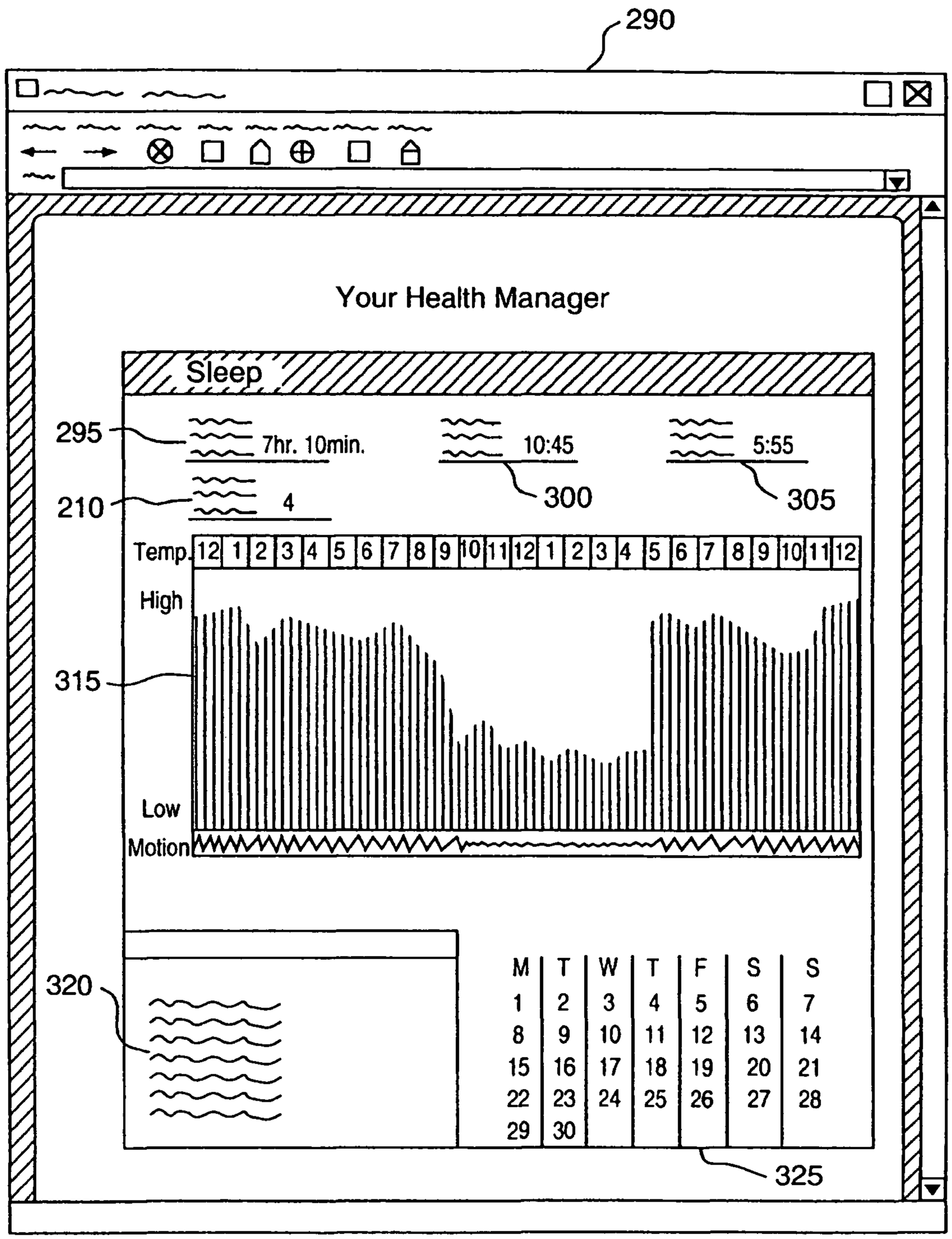
290
Your Health Manager
Sleep
295
7hr. 10min.
10:45
5:55
210
4
300
305
Temp.
12 1 2 3 4 5 6 7 8 9 10 11 12 1 2 3 4 5 6 7 8 9 10 11 12
High
315
Low
Motion
320
M T W T F S S
1 2 3 4 5 6 7
8 9 10 11 12 13 14
15 16 17 18 19 20 21
22 23 24 25 26 27 28
29 30
325

FIG. 9

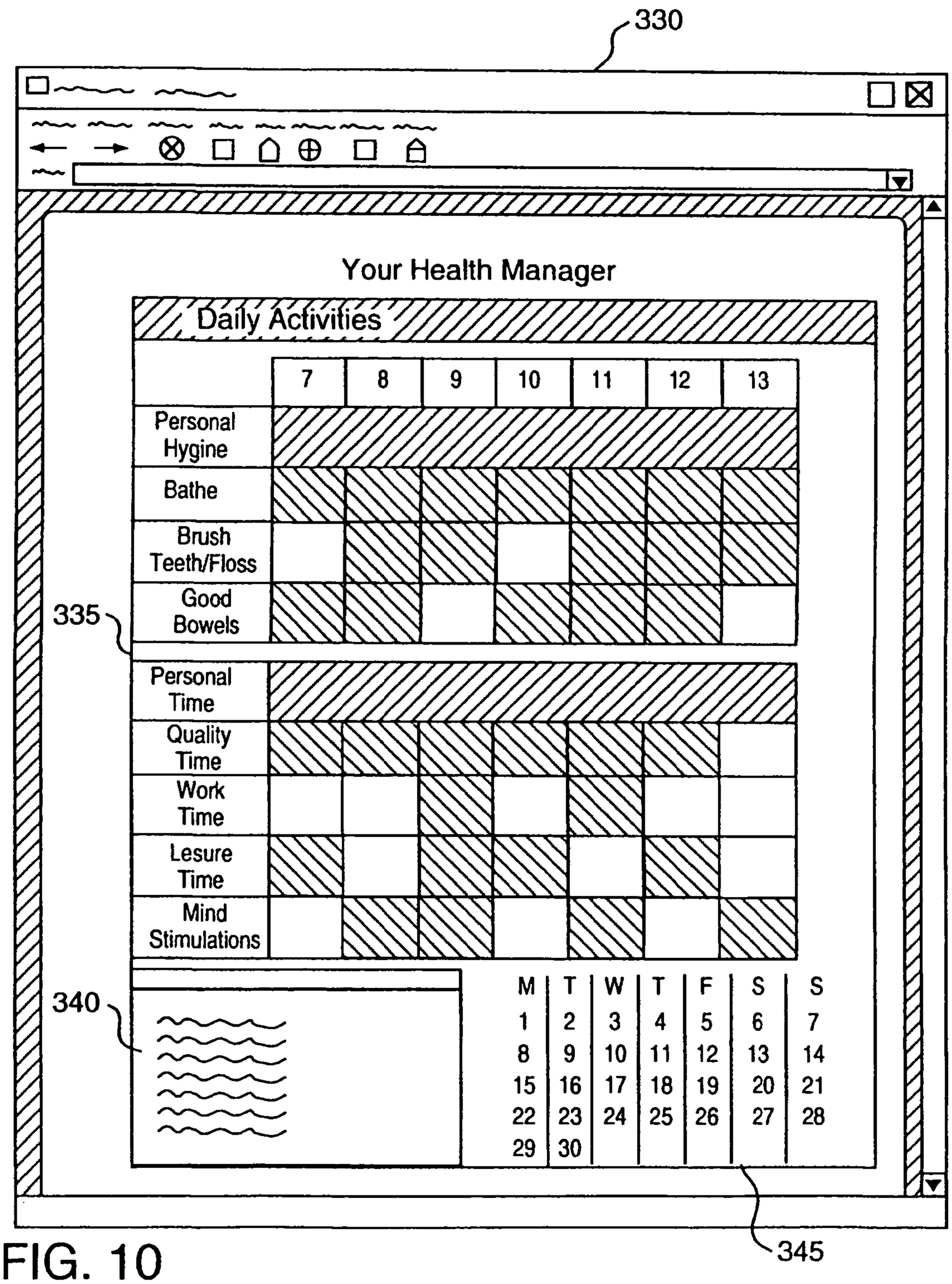
330
Your Health Manager
Daily Activities
7
8
9
10
11
12
13
Personal Hygine
Bathe
Brush Teeth/Floss
Good Bowels
335
Personal Time
Quality Time
Work Time
Lesure Time
Mind Stimulations
340
M T W T F S S
1 2 3 4 5 6 7
8 9 10 11 12 13 14
15 16 17 18 19 20 21
22 23 24 25 26 27 28
29 30
345

FIG. 10

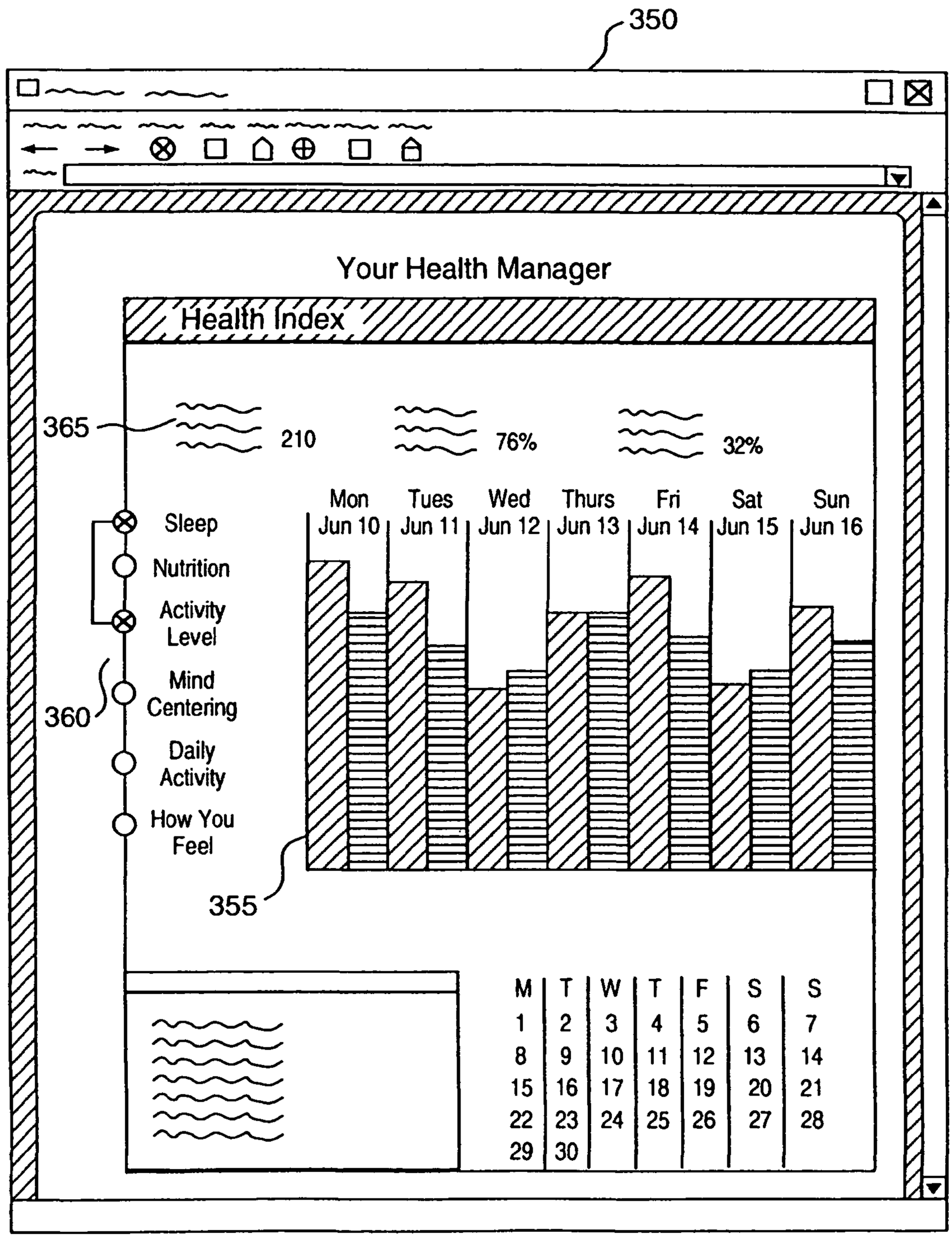
350
Your Health Manager
Health Index
365
210
76%
32%
Mon Jun 10
Tues Jun 11
Wed Jun 12
Thurs Jun 13
Fri Jun 14
Sat Jun 15
Sun Jun 16
Sleep
Nutrition
Activity Level
Mind Centering
Daily Activity
How You Feel
360
355
M T W T F S S
1 2 3 4 5 6 7
8 9 10 11 12 13 14
15 16 17 18 19 20 21
22 23 24 25 26 27 28
29 30

FIG. 11

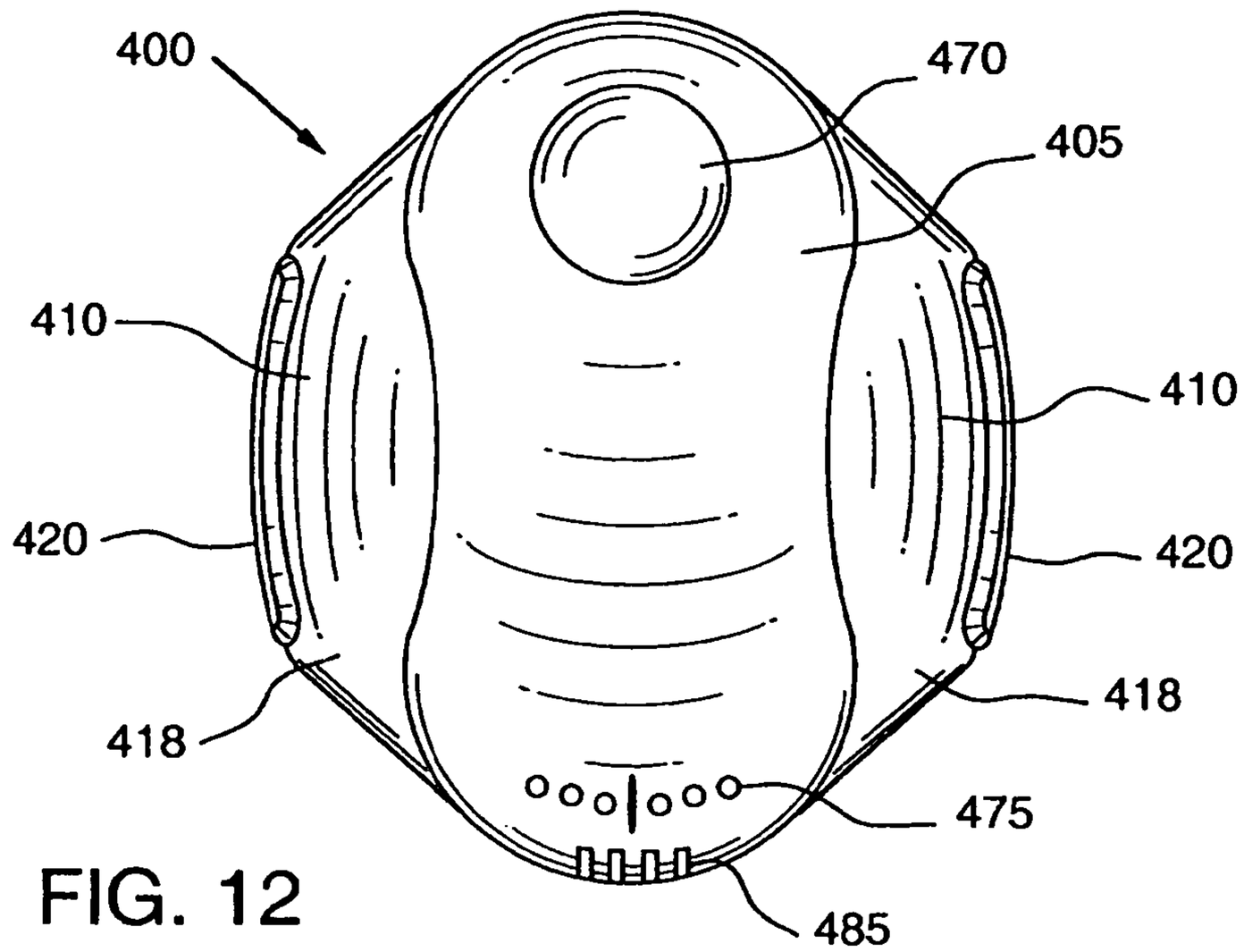
400
470
405
410
410
420
420
418
418
475
485

FIG. 12

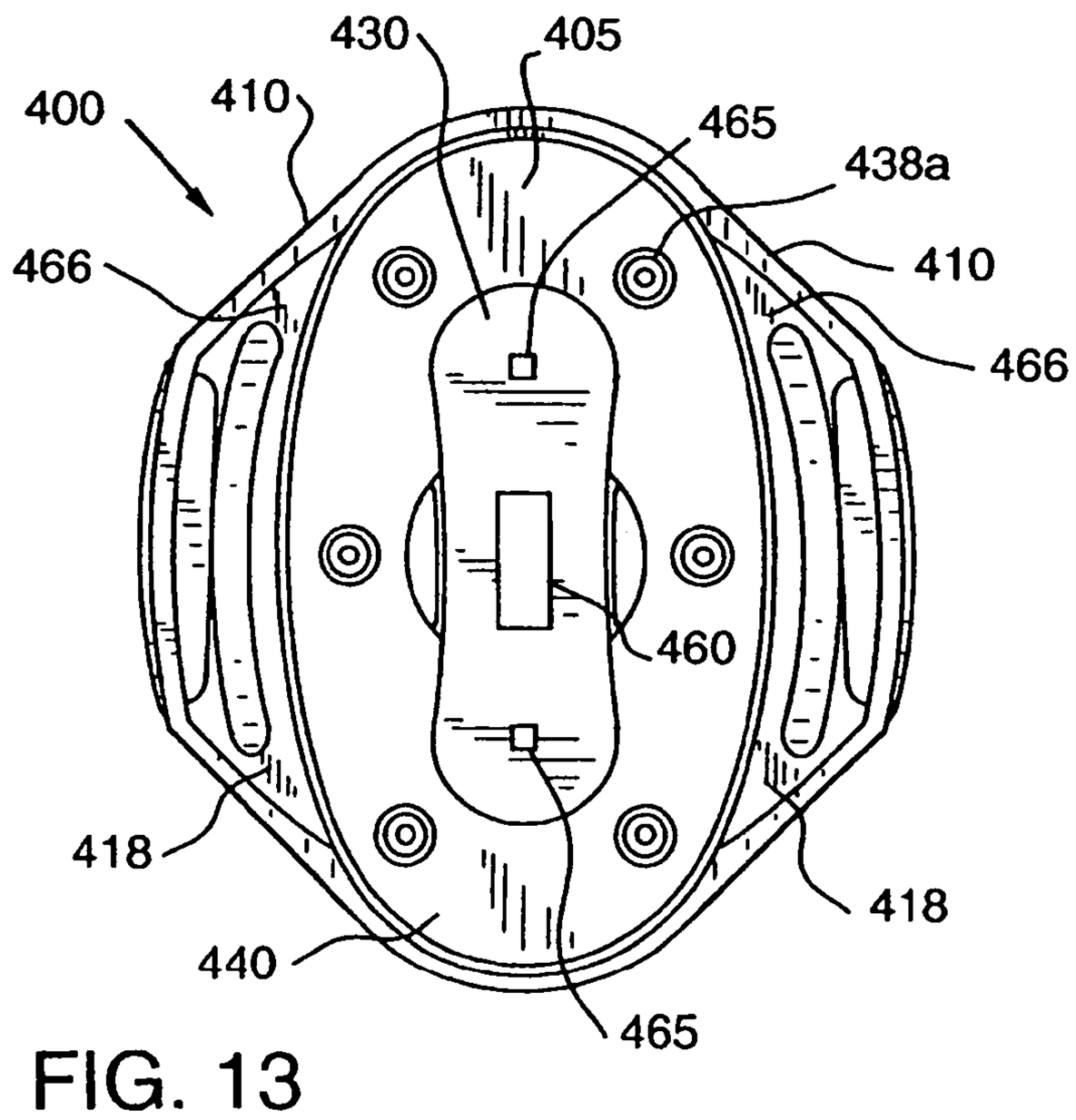
430
405
400
410
465
438a
466
410
466
460
418
418
440
465

FIG. 13

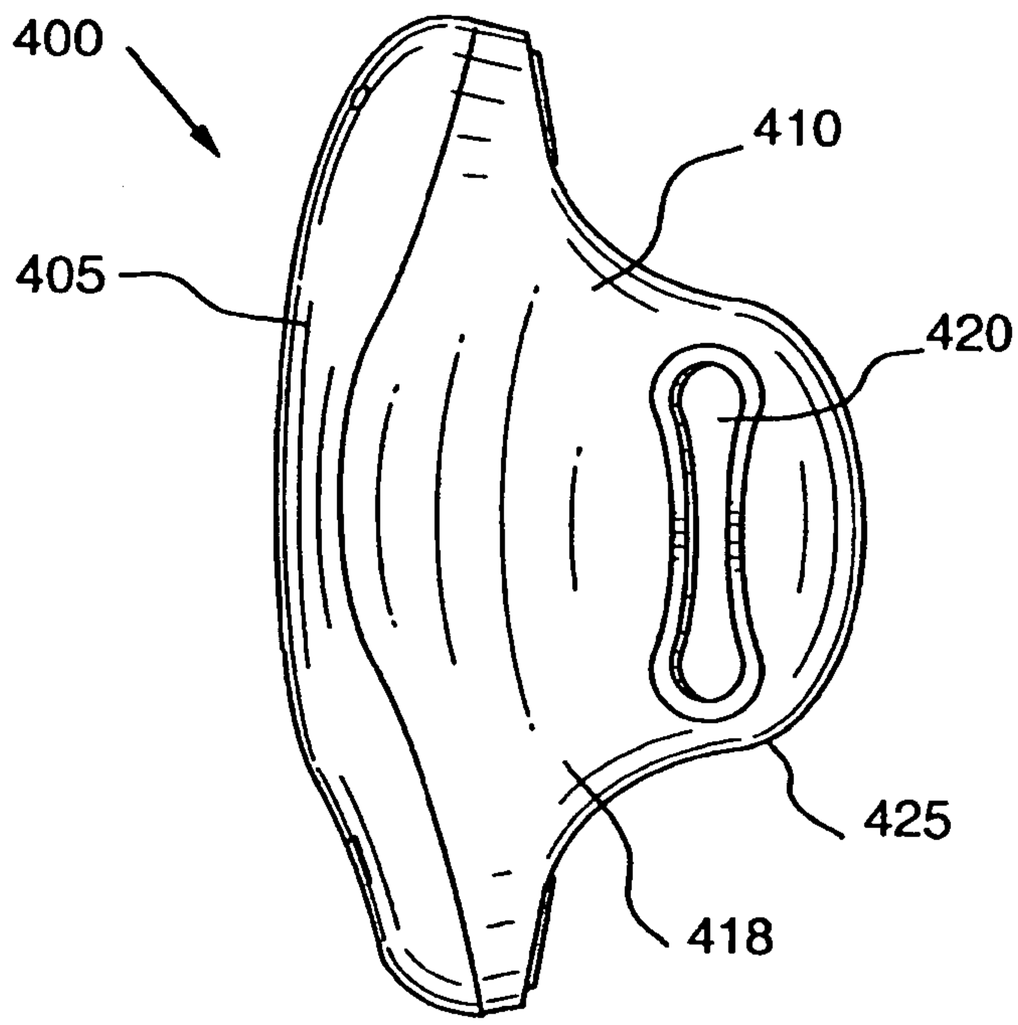
400
410
405
420
425
418

FIG. 14

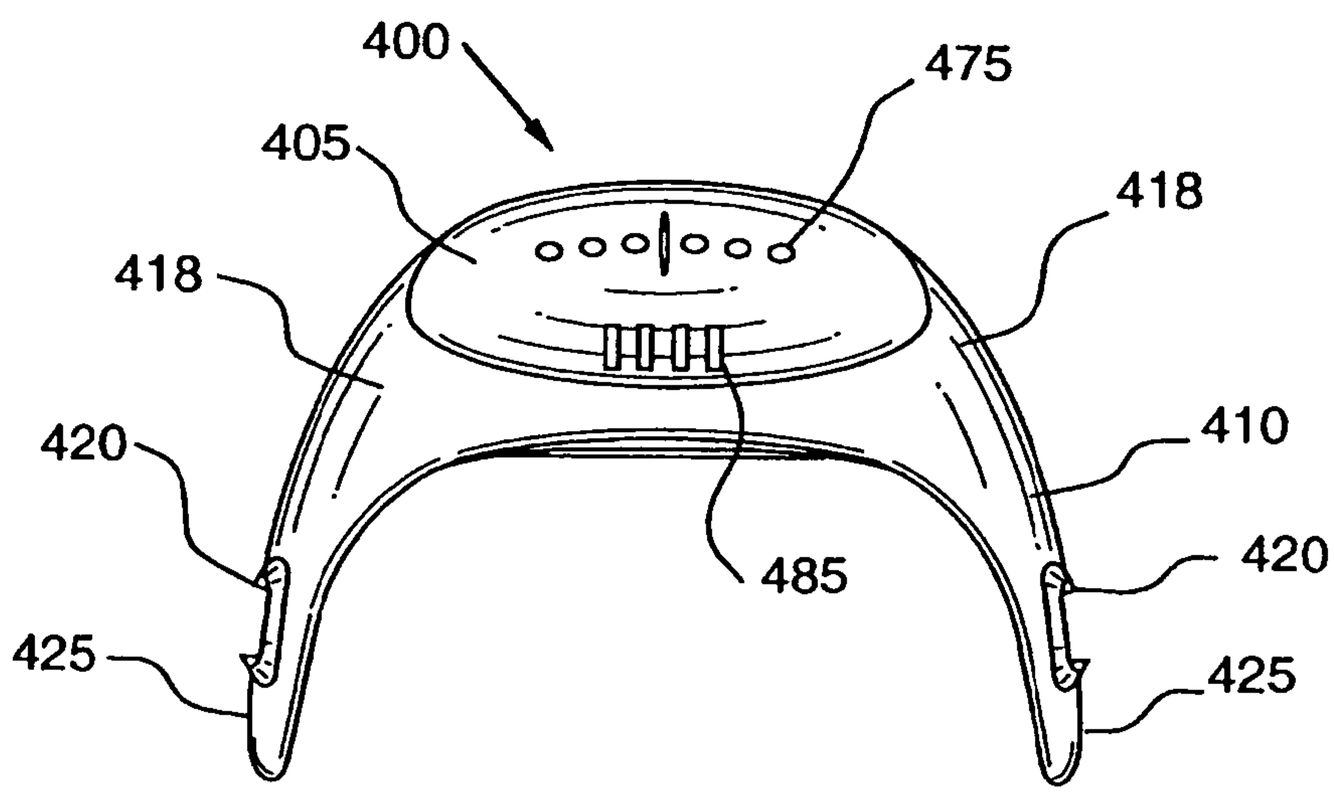
400
475
405
418
418
410
420
485
420
425
425

FIG. 15

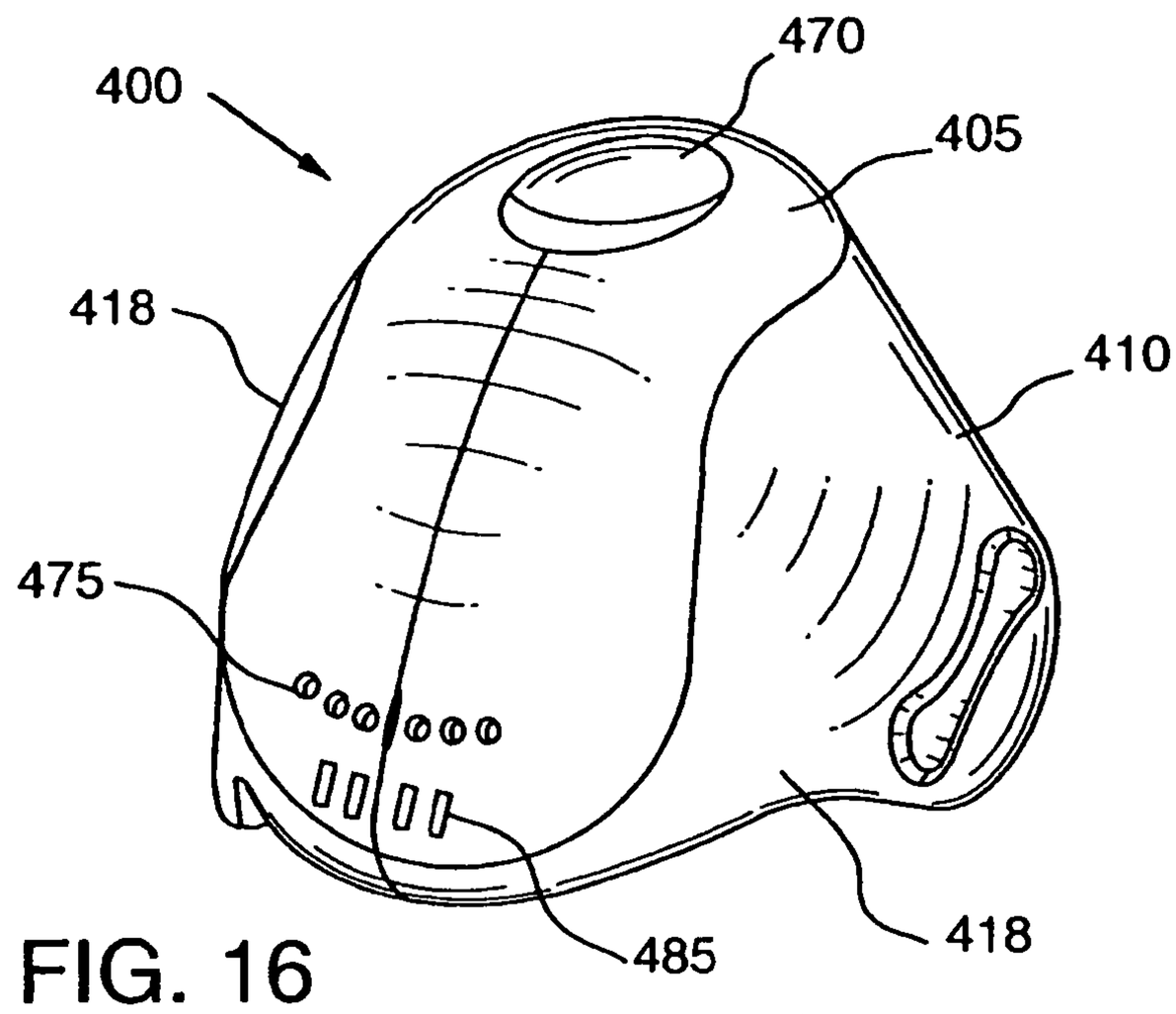
400
470
405
418
410
475
485
418

FIG. 16

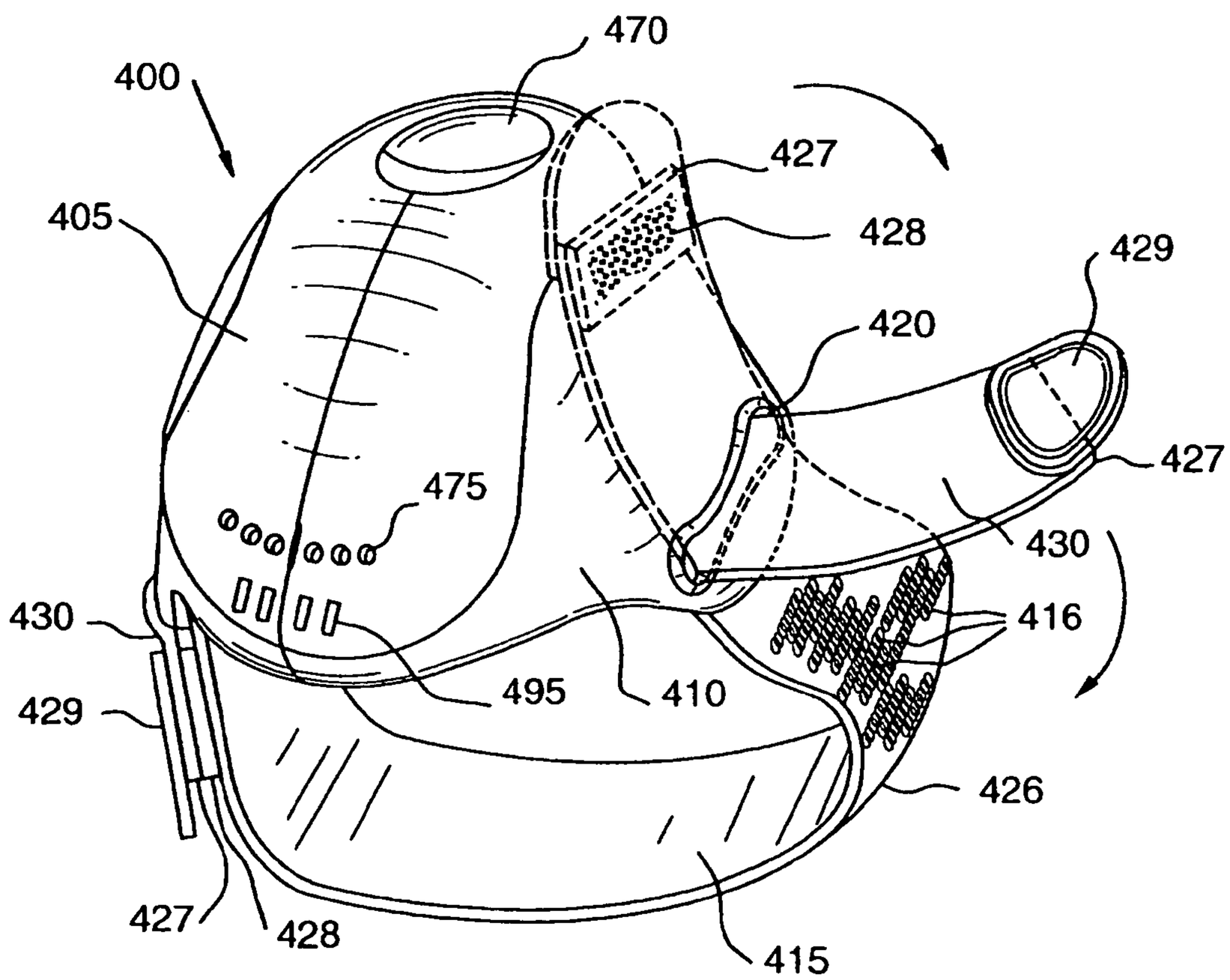
400
470
427
405
428
429
420
427
475
430
416
430
429
495
410
426
427
428
415

FIG. 17

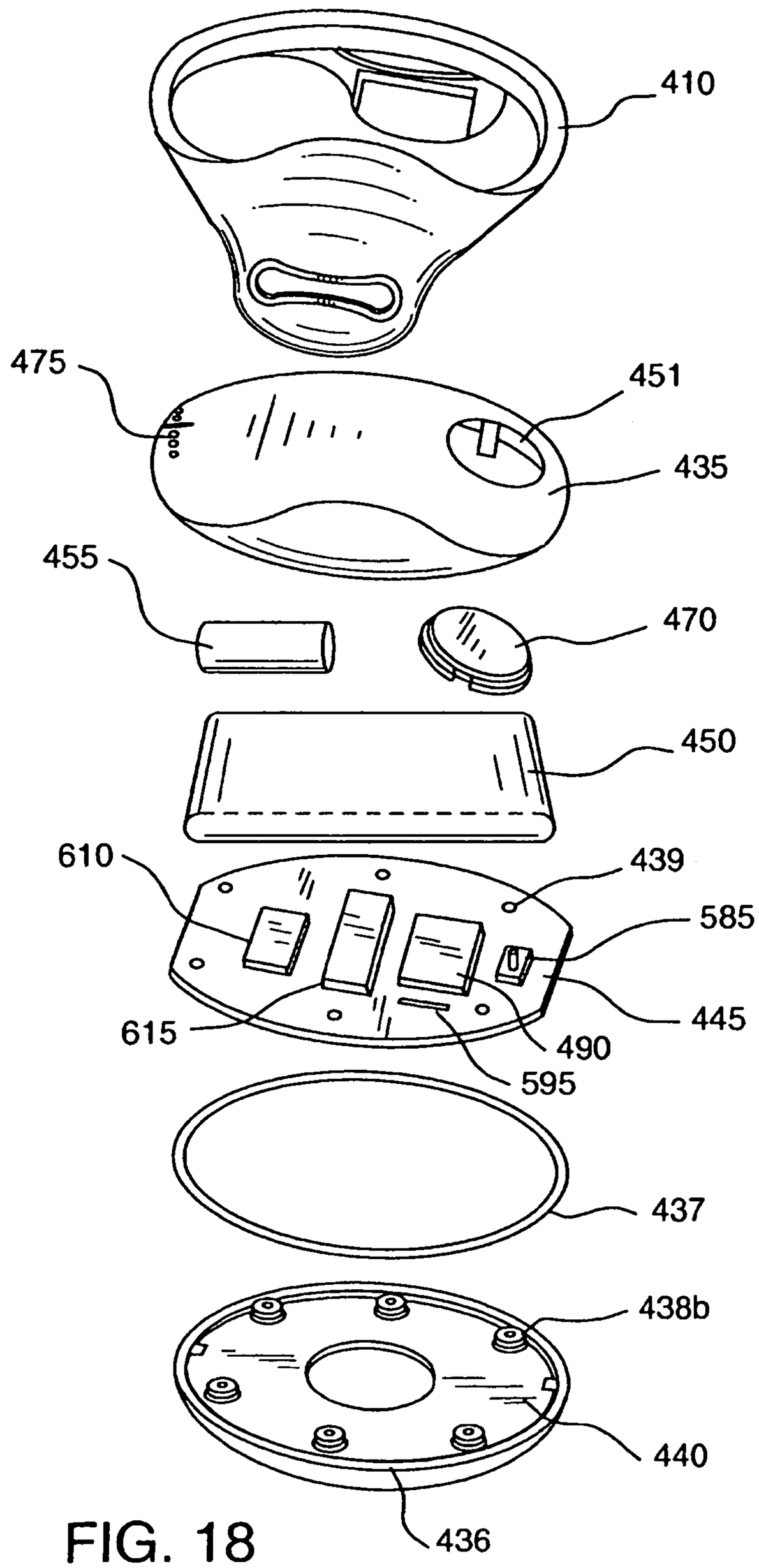
410
475
451
435
455
470
450
610
439
585
445
615
490
595
437
438b
440
436

FIG. 18

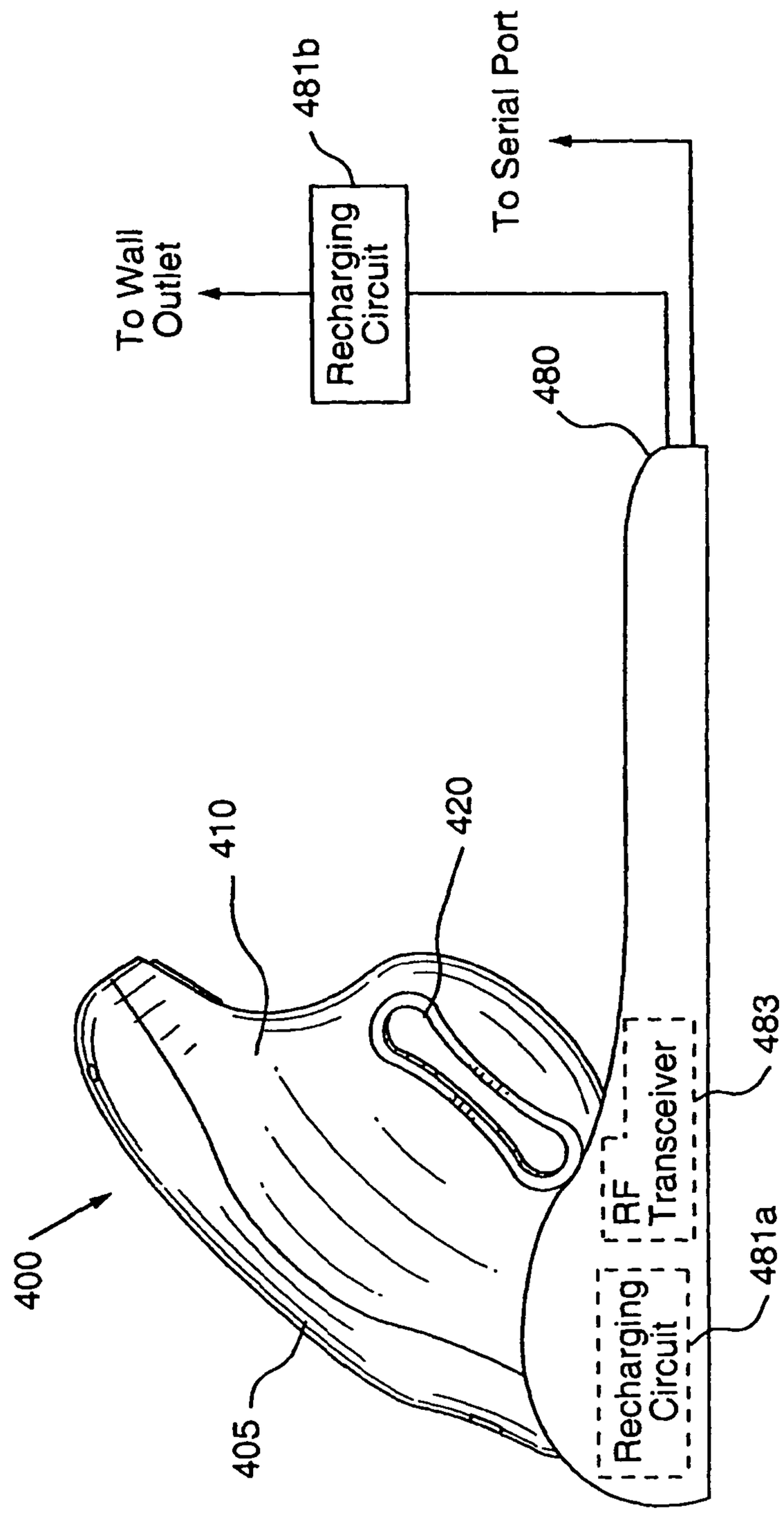
To Wall Outlet
Recharging Circuit
481b
To Serial Port
480
410
420
400
405
Recharging Circuit
RF Transceiver
481a
483

FIG. 19

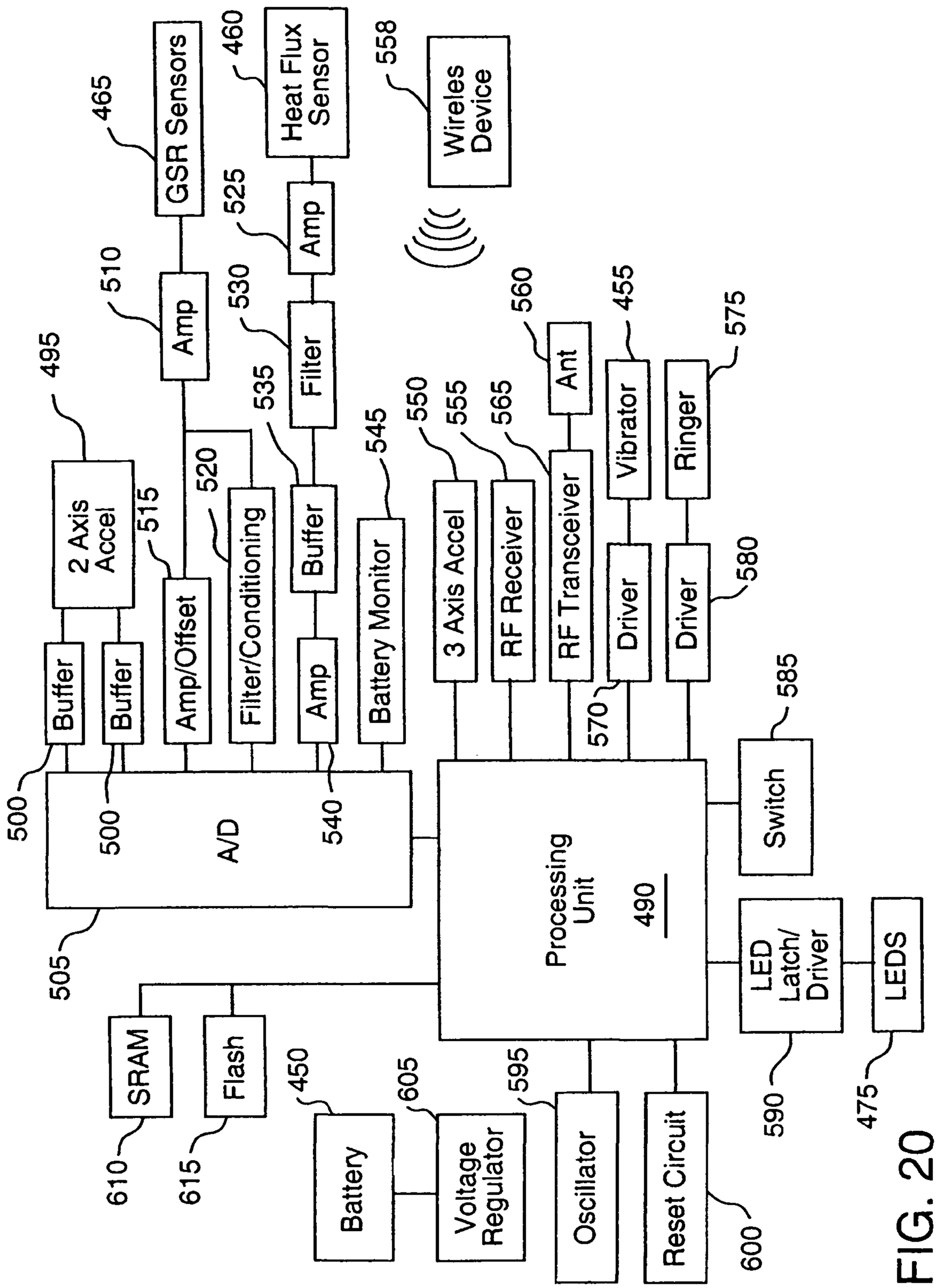
GSR Sensors
465
Heat Flux Sensor
460
Wireles Device
558
Amp
525
Amp
510
Filter
530
Ant
560
Vibrator
455
Ringer
575
2 Axis Accel
495
Buffer
515
Amp/Offset
520
Filter/Conditioning
535
Buffer
Battery Monitor
545
3 Axis Accel
550
RF Receiver
555
RF Transceiver
565
Driver
570
Driver
580
Buffer
500
Buffer
500
A/D
505
Amp
540
Processing Unit
490
Switch
585
LED Latch/ Driver
590
LEDS
475
SRAM
610
Flash
615
Battery
450
Voltage Regulator
605
Oscillator
595
Reset Circuit
600

FIG. 20

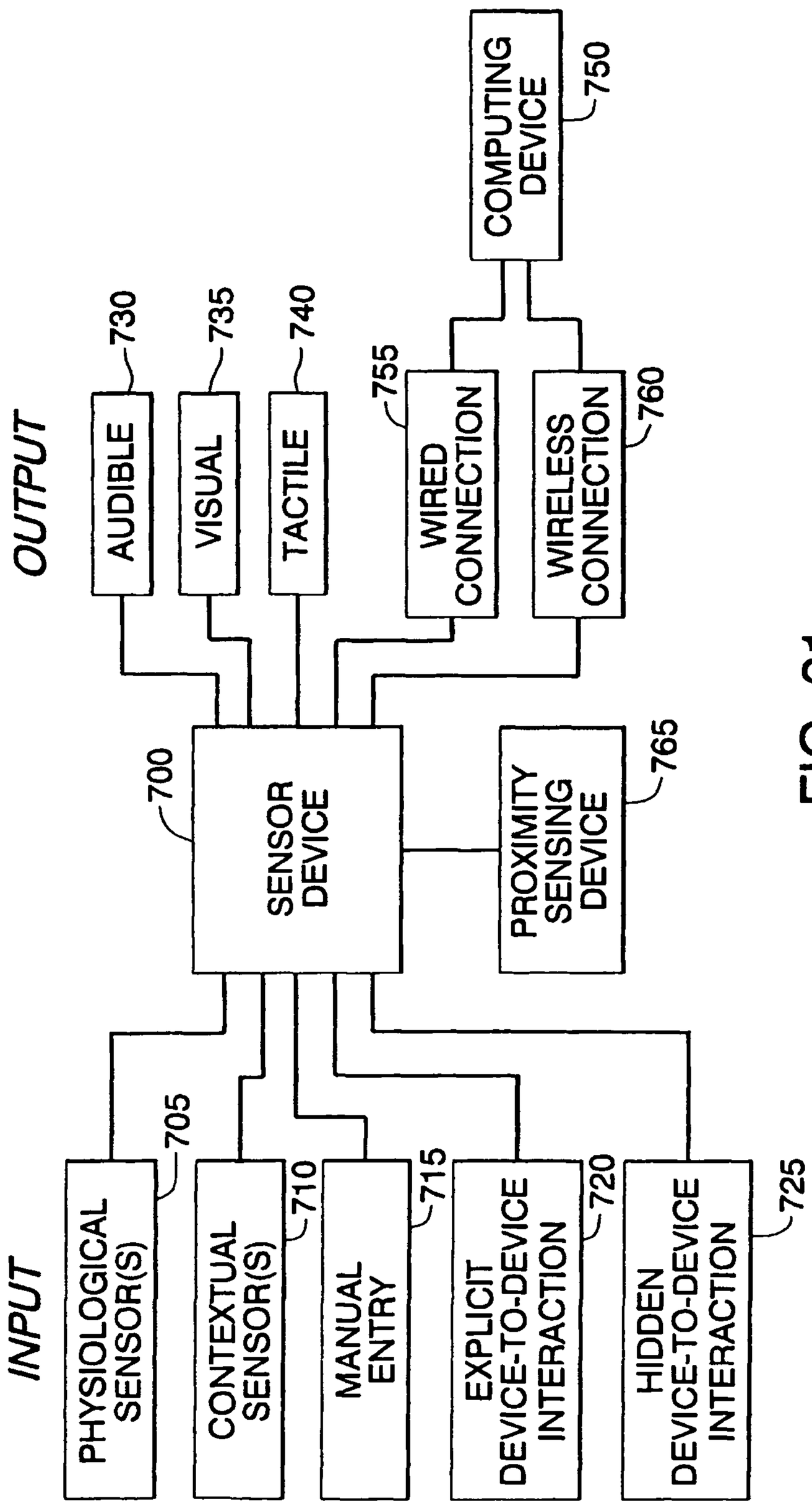
INPUT
PHYSIOLOGICAL SENSOR(S)
705
CONTEXTUAL SENSOR(S)
710
MANUAL ENTRY
715
EXPLICIT DEVICE-TO-DEVICE INTERACTION
720
HIDDEN DEVICE-TO-DEVICE INTERACTION
725
SENSOR DEVICE
700
PROXIMITY SENSING DEVICE
765
OUTPUT
AUDIBLE
730
VISUAL
735
TACTILE
740
WIRED CONNECTION
755
WIRELESS CONNECTION
760
COMPUTING DEVICE
750

FIG. 21

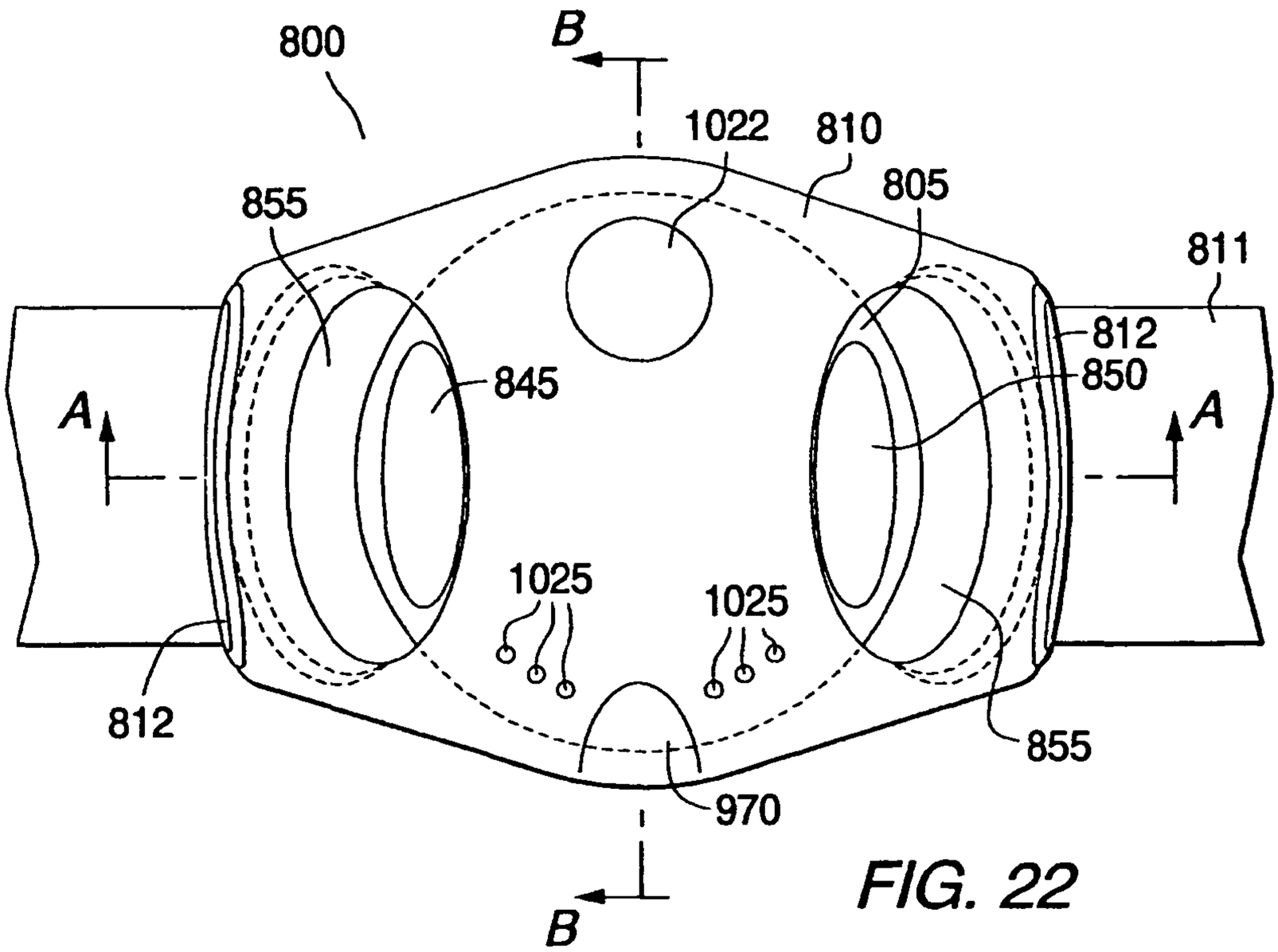
800
B
1022
810
805
855
811
812
850
845
A
A
1025
1025
812
855
970
B

FIG. 22

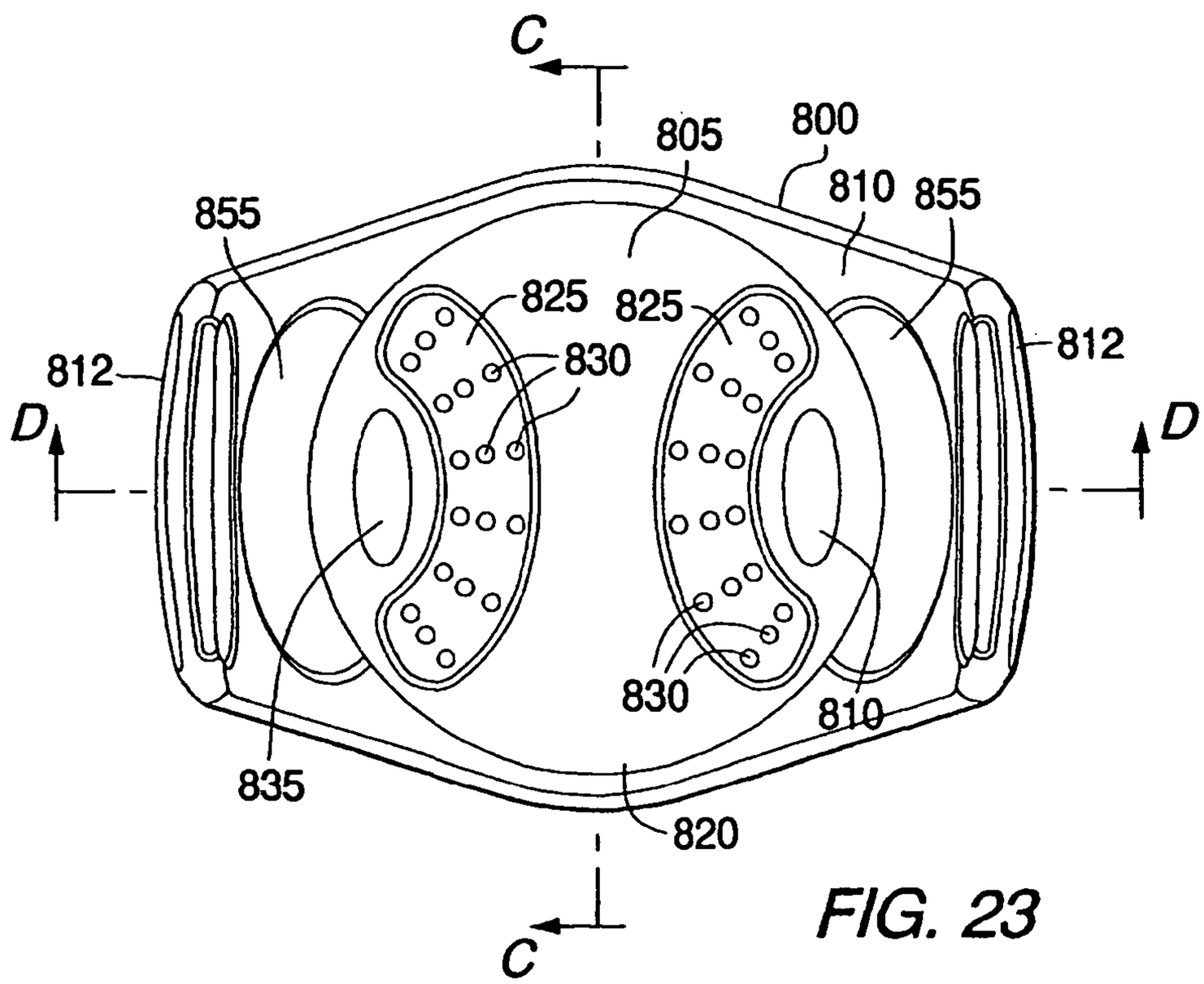
C
805
800
810
855
855
825
825
812
830
812
D
D
830
810
835
820
C

FIG. 23

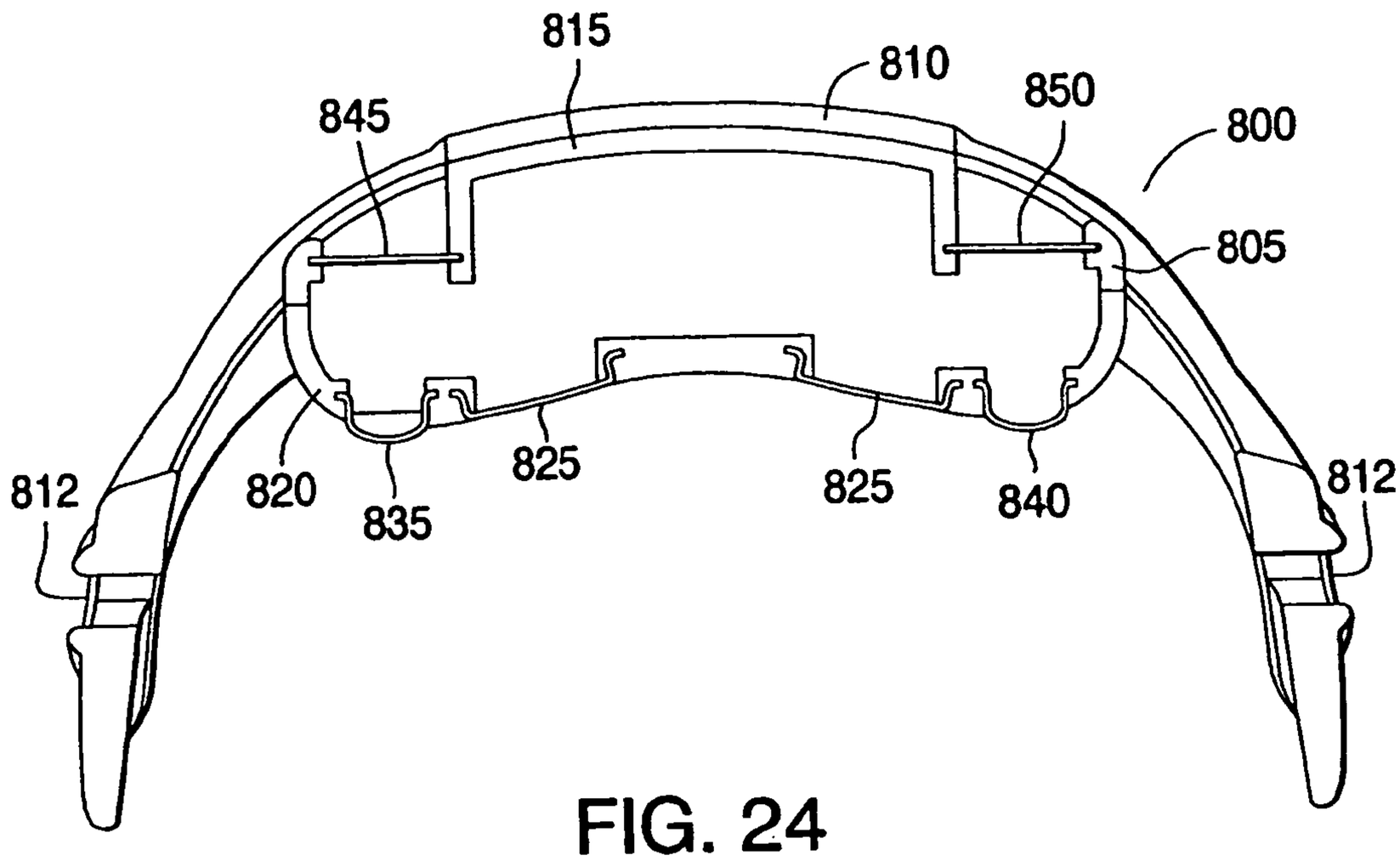
815
810
850
845
800
805
825
825
820
835
840
812
812

FIG. 24

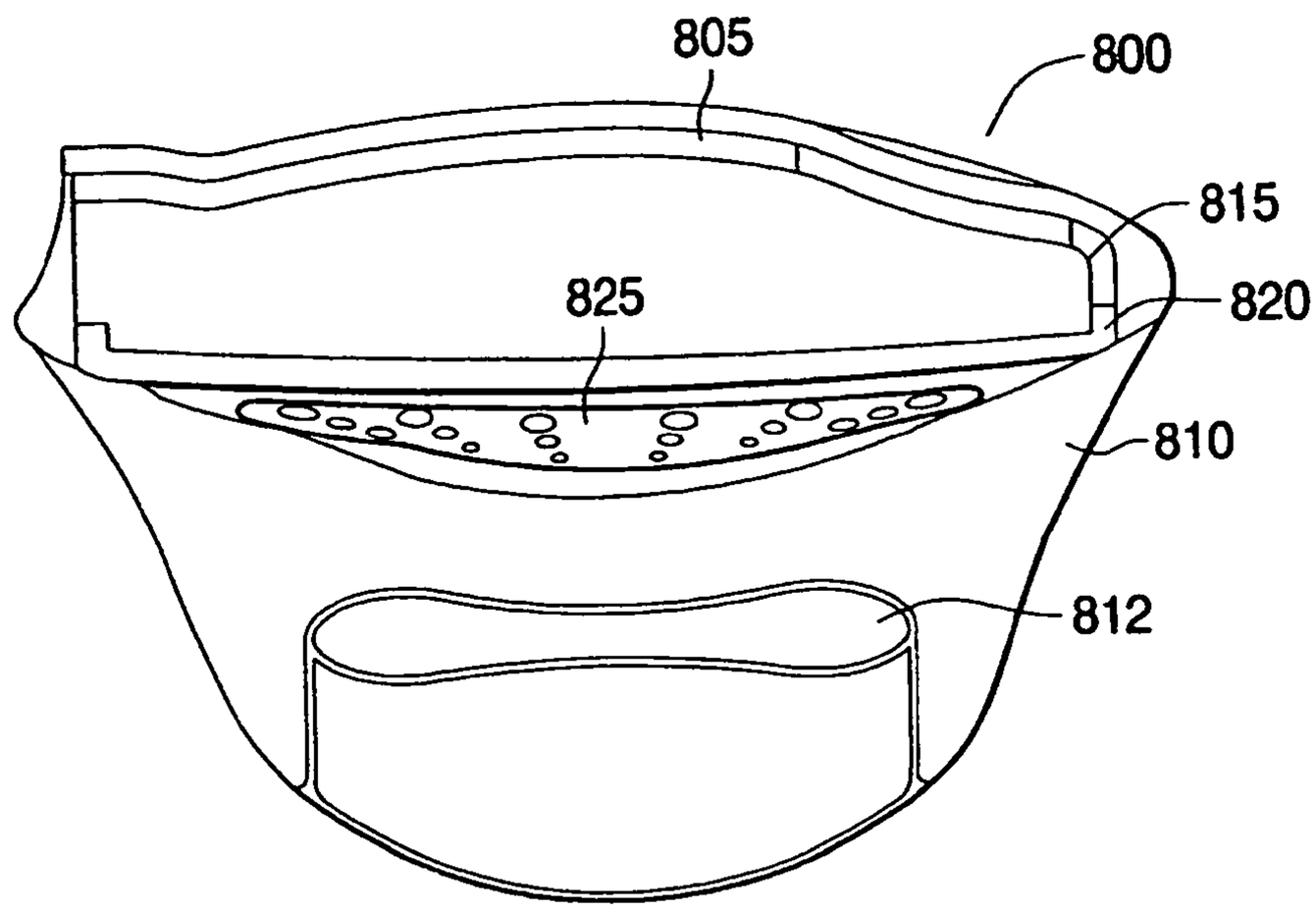
805
800
815
825
820
810
812

FIG. 25

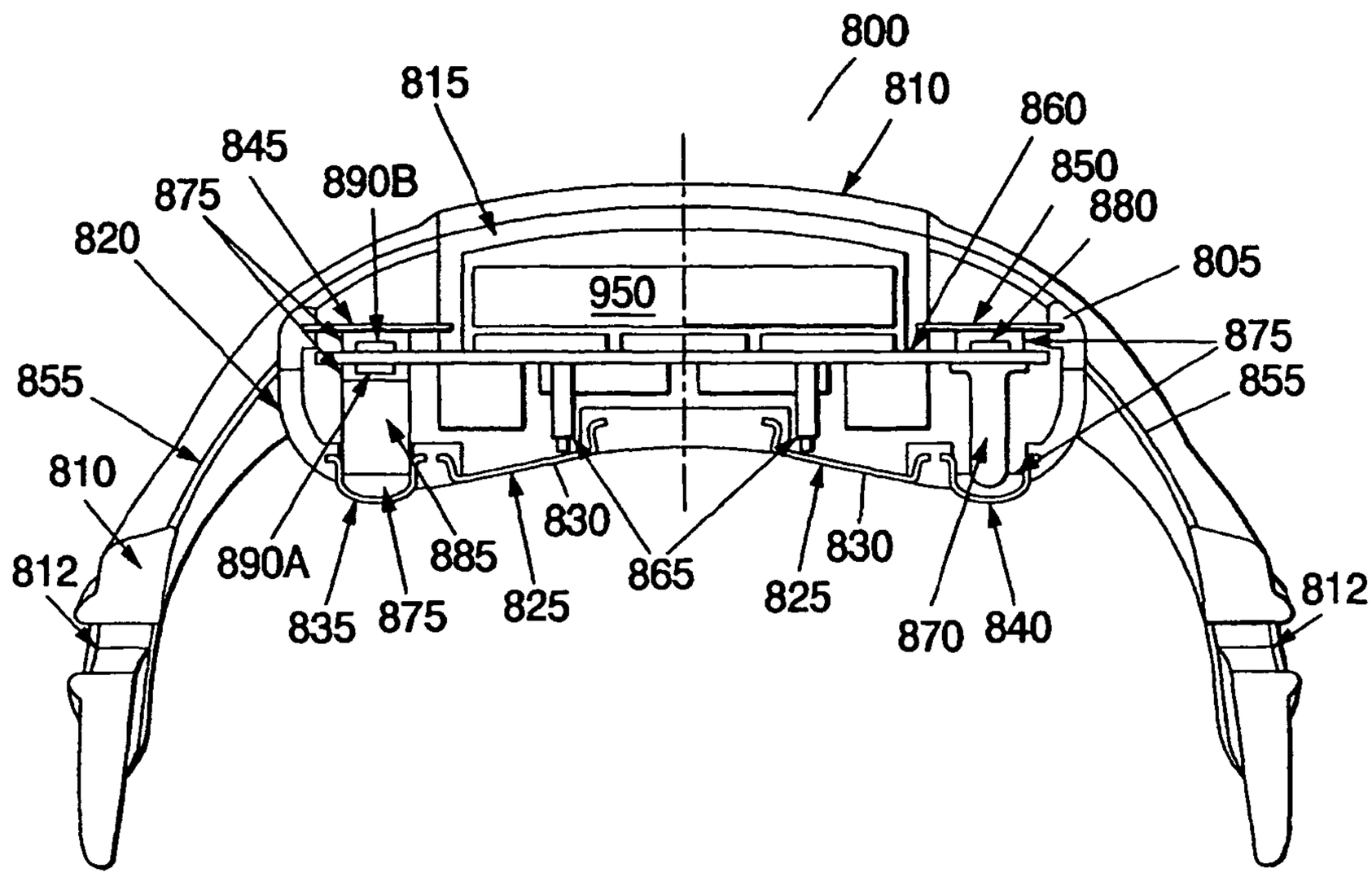
800
810
815
860
845
850
890B
875
880
820
805
950
875
855
855
810
830
890A
885
865
830
812
835
875
825
825
870
840
812

FIG. 26

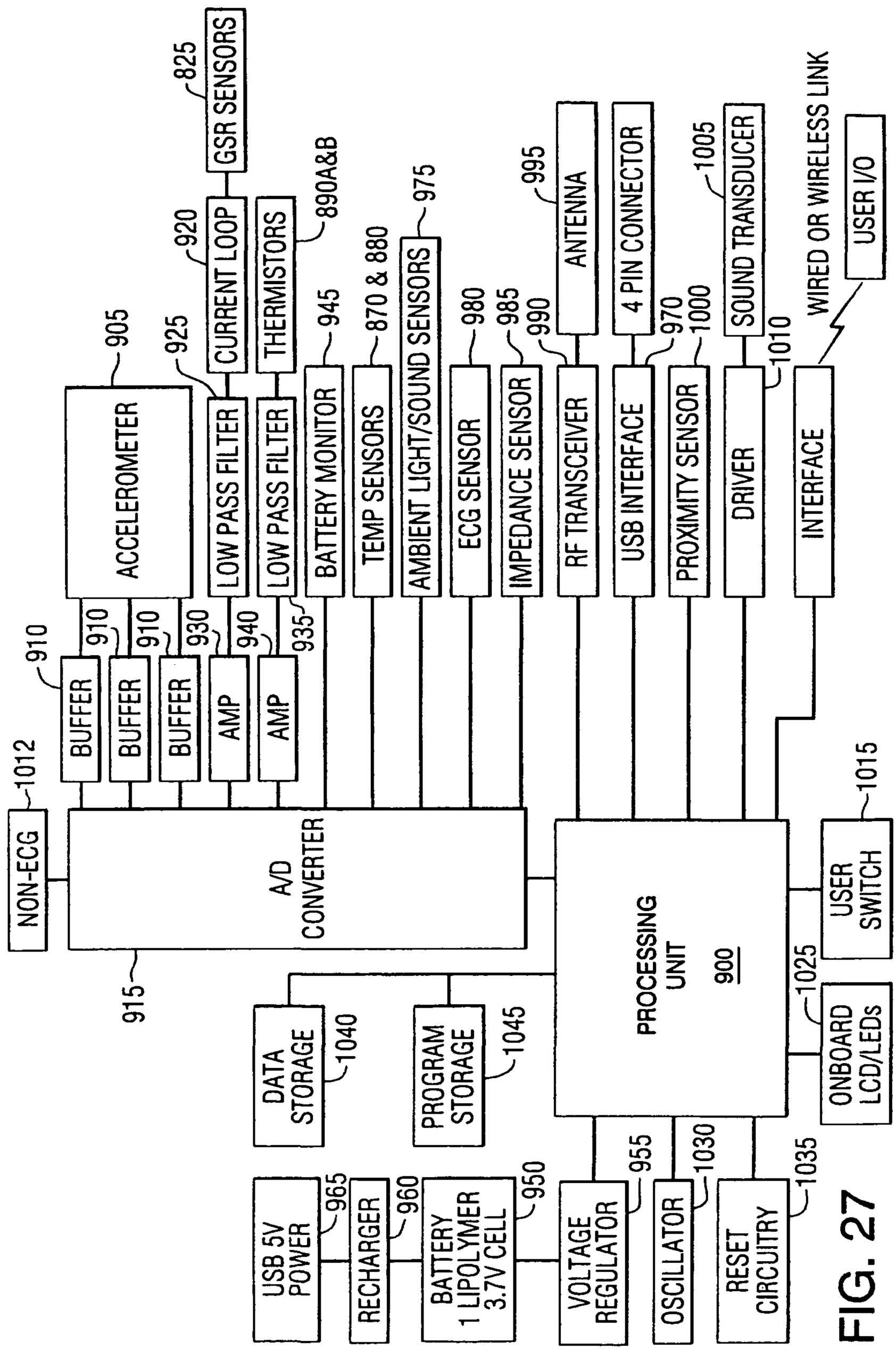
ACCELEROMETER
905
CURRENT LOOP
920
GSR SENSORS
825
LOW PASS FILTER
925
THERMISTORS
890A&B
LOW PASS FILTER
935
BATTERY MONITOR
945
TEMP SENSORS
870 & 880
AMBIENT LIGHT/SOUND SENSORS
975
ECG SENSOR
980
IMPEDANCE SENSOR
985
RF TRANSCEIVER
990
ANTENNA
995
USB INTERFACE
4 PIN CONNECTOR
970
PROXIMITY SENSOR
1000
DRIVER
SOUND TRANSDUCER
1005
INTERFACE
1010
WIRED OR WIRELESS LINK
USER I/O
BUFFER
910
BUFFER
910
BUFFER
910
AMP
930
AMP
940
NON-ECG
1012
A/D CONVERTER
915
PROCESSING UNIT
900
USER SWITCH
1015
ONBOARD LCD/LEDs
1025
DATA STORAGE
1040
PROGRAM STORAGE
1045
USB 5V POWER
965
RECHARGER
960
BATTERY 1 LIPOLYMER 3.7V CELL
950
VOLTAGE REGULATOR
955
OSCILLATOR
1030
RESET CIRCUITRY
1035

FIG. 27

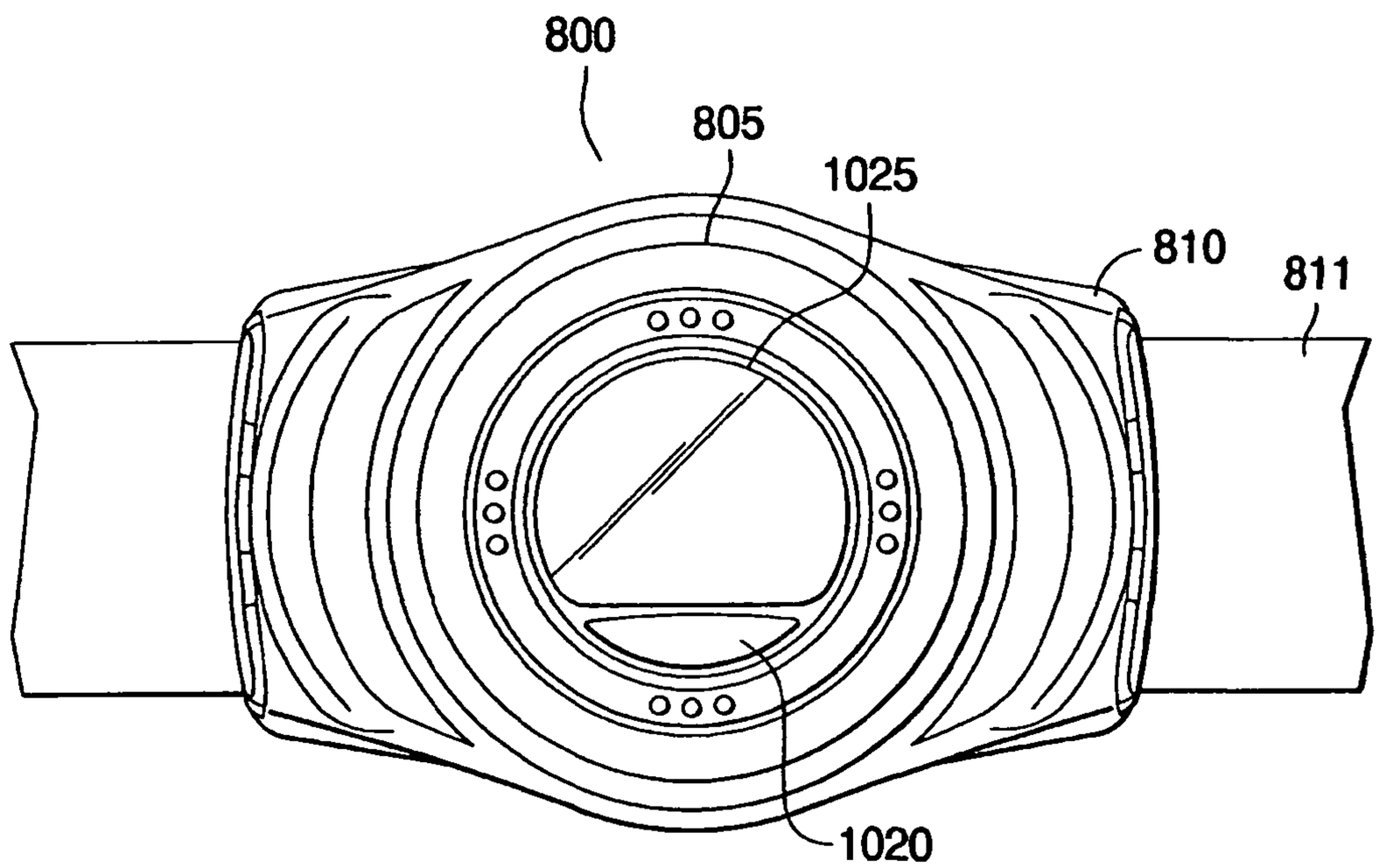

FIG. 28

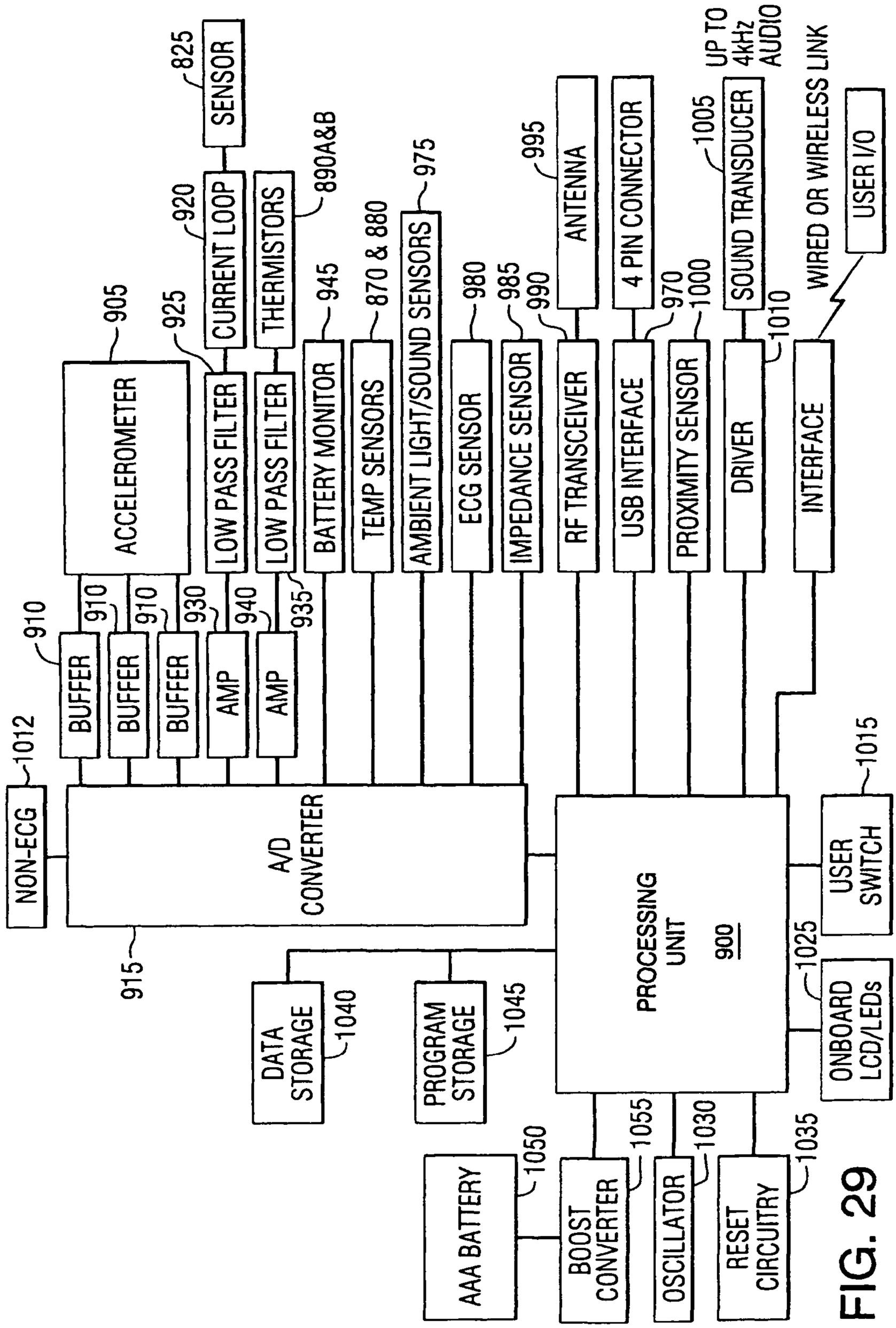
ACCELEROMETER
905
LOW PASS FILTER
925
CURRENT LOOP
920
SENSOR
825
LOW PASS FILTER
THERMISTORS
890A&B
935
BATTERY MONITOR
945
TEMP SENSORS
870 & 880
AMBIENT LIGHT/SOUND SENSORS
975
ECG SENSOR
980
IMPEDANCE SENSOR
985
RF TRANSCEIVER
990
ANTENNA
995
USB INTERFACE
4 PIN CONNECTOR
970
PROXIMITY SENSOR
1000
DRIVER
1005
SOUND TRANSDUCER
UP TO 4kHz AUDIO
1010
INTERFACE
WIRED OR WIRELESS LINK
USER I/O
BUFFER
910
BUFFER
910
BUFFER
910
AMP
930
AMP
940
NON-ECG
1012
A/D CONVERTER
915
PROCESSING UNIT
900
USER SWITCH
1015
ONBOARD LCD/LEDs
1025
DATA STORAGE
1040
PROGRAM STORAGE
1045
AAA BATTERY
1050
BOOST CONVERTER
1055
OSCILLATOR
1030
RESET CIRCUITRY
1035

FIG. 29

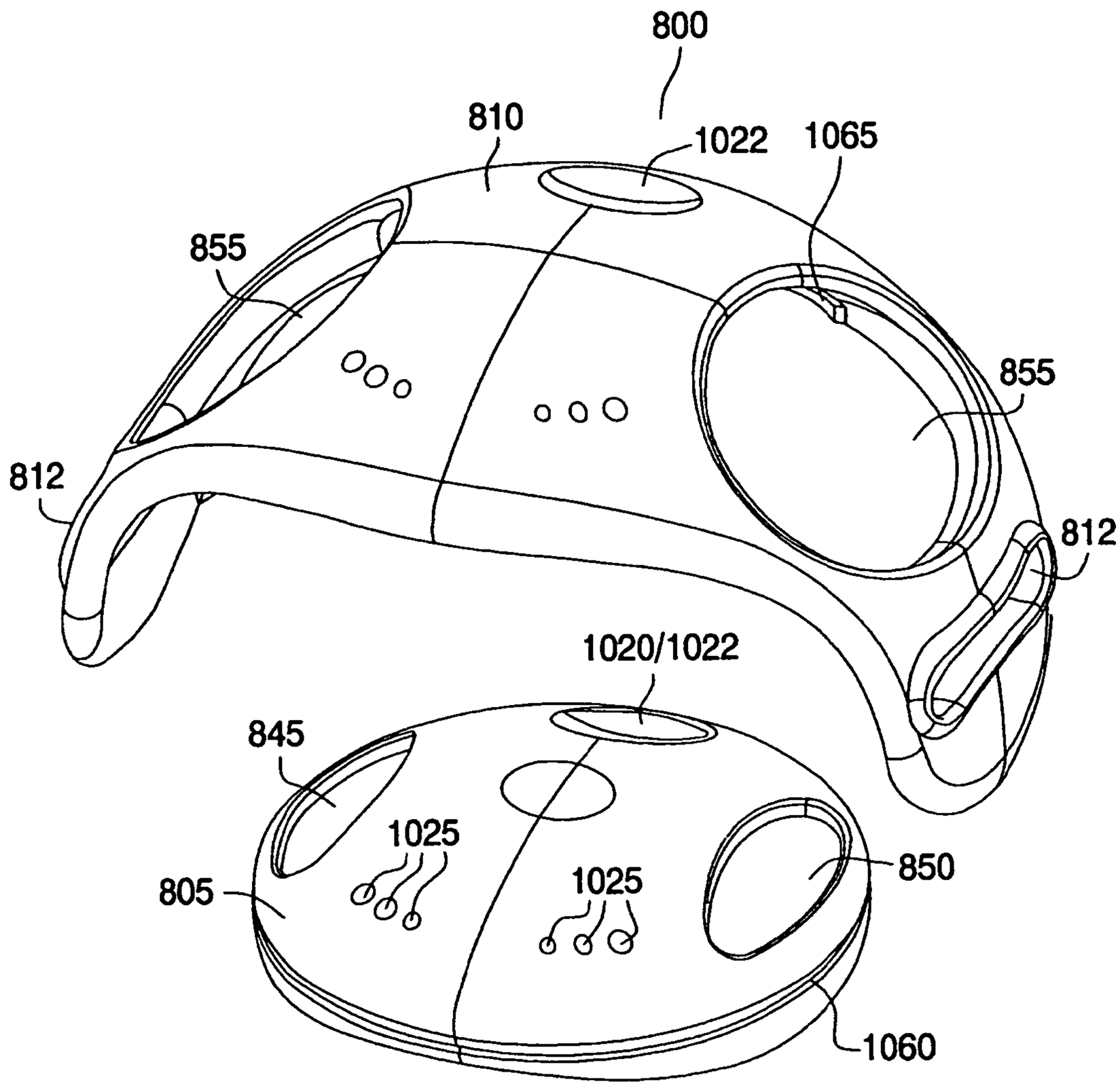
800
810
1022
1065
855
855
812
812
1020/1022
845
1025
1025
805
850
1060

FIG. 30

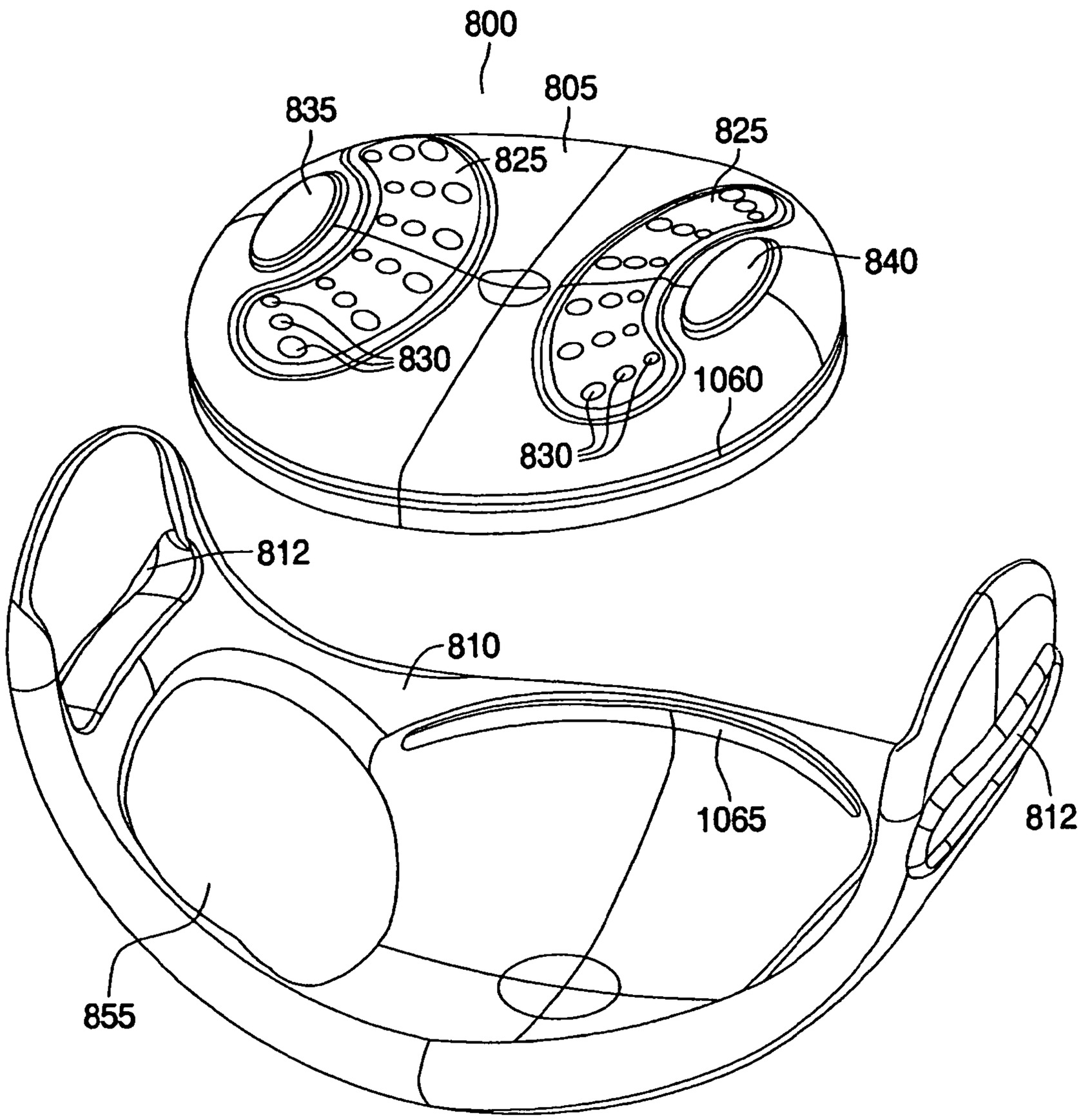

FIG. 31

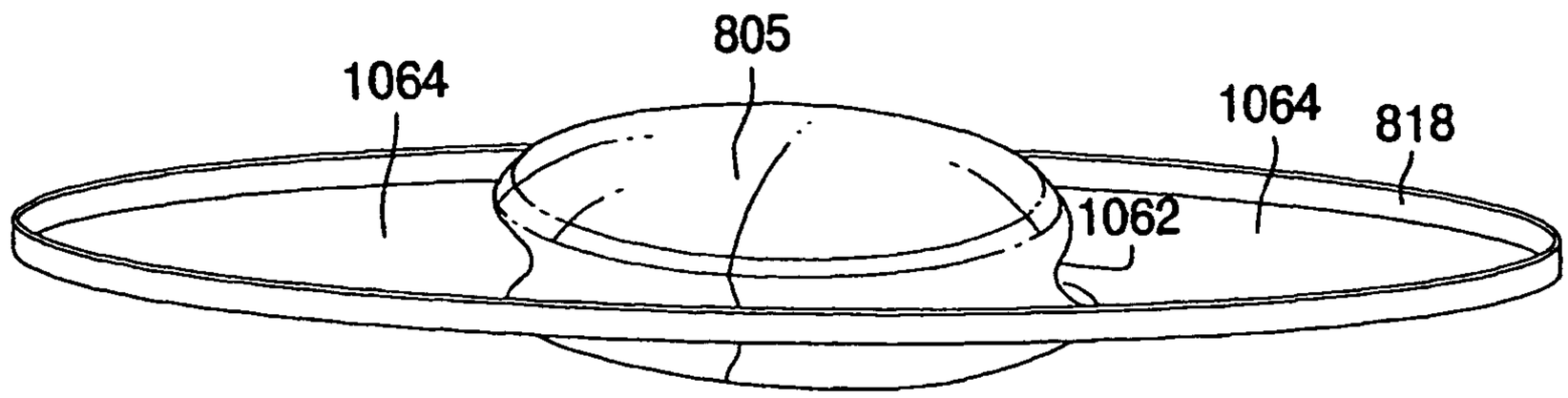
805
1064
1064
818
1062

FIG. 32

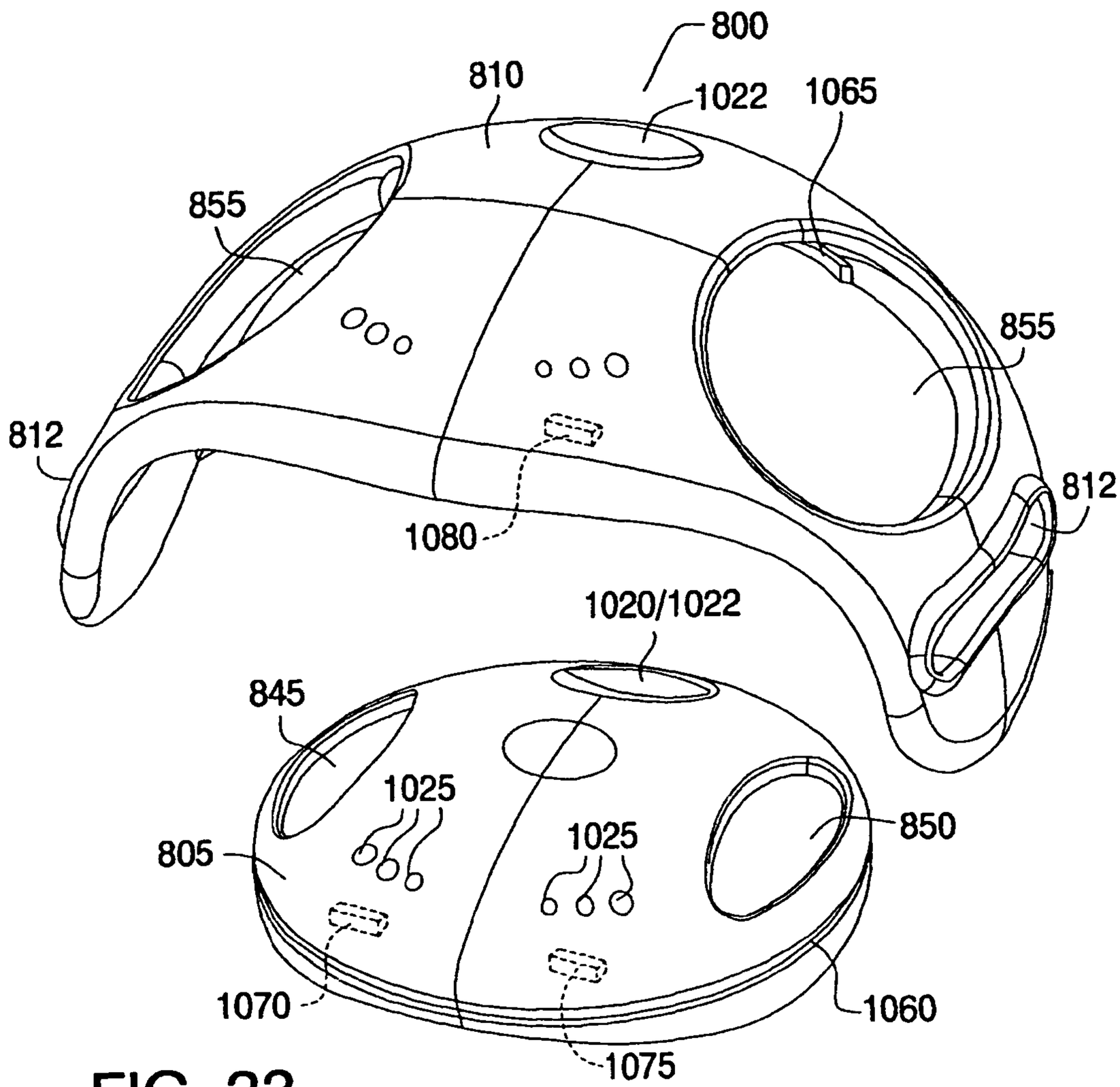
800
810
1022
1065
855
855
812
812
1080
1020/1022
845
1025
1025
850
805
1070
1060
1075

FIG. 33

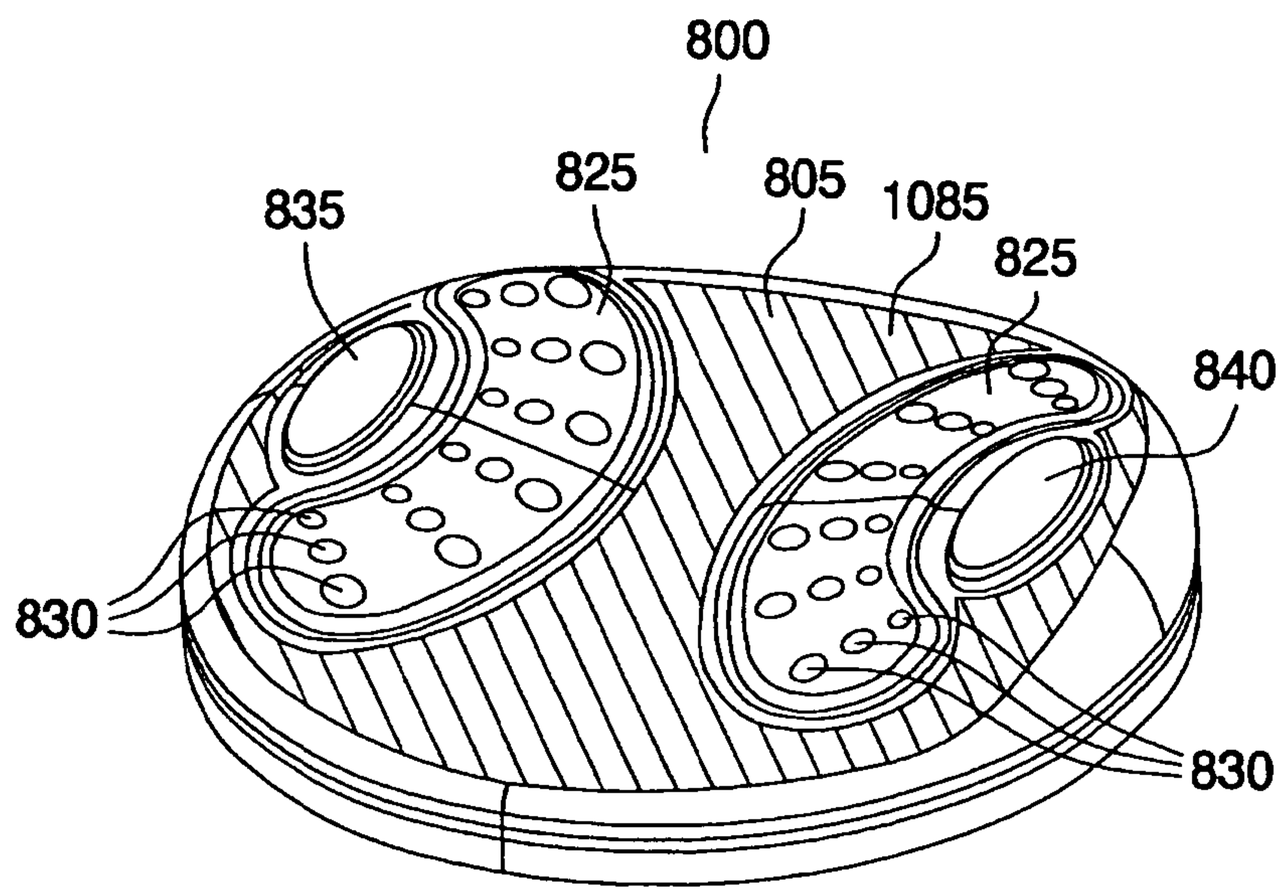

FIG. 34

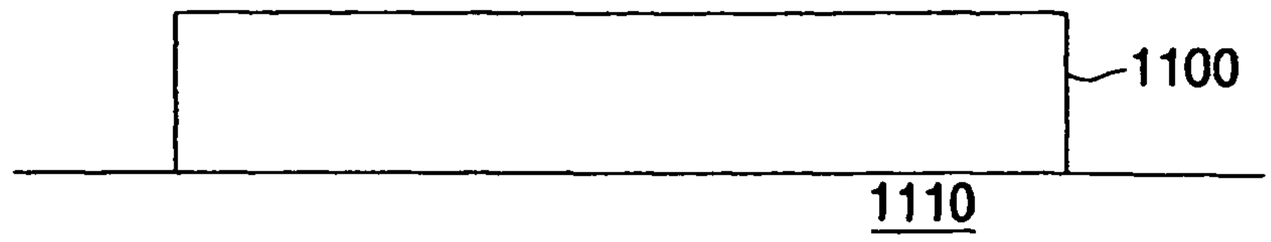

FIG. 35A
PRIOR ART

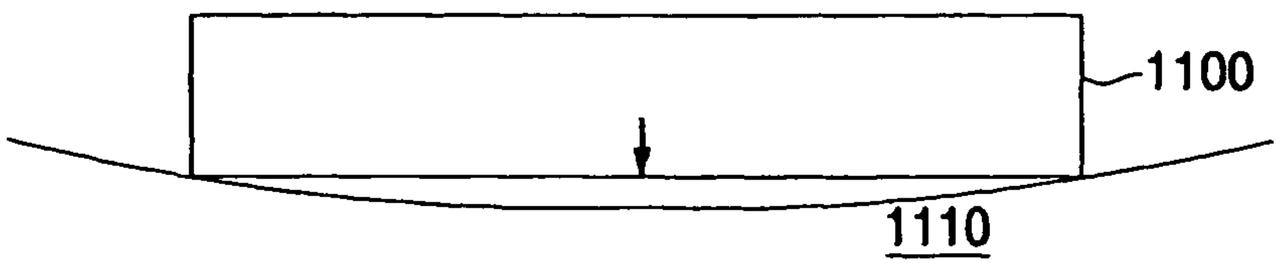

FIG. 35B
PRIOR ART

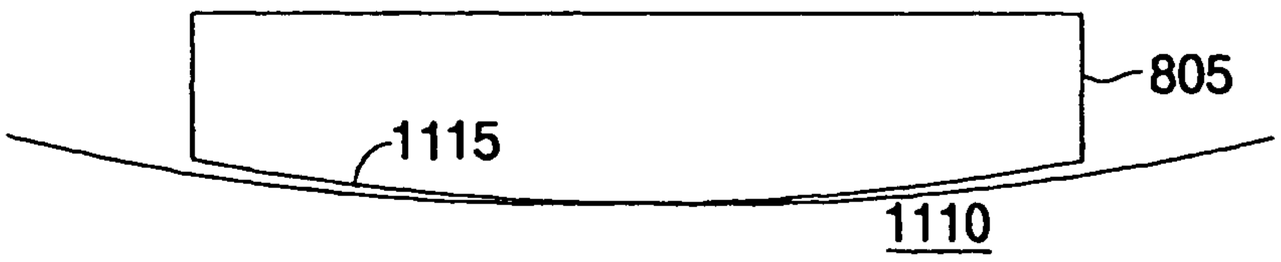

FIG. 35C

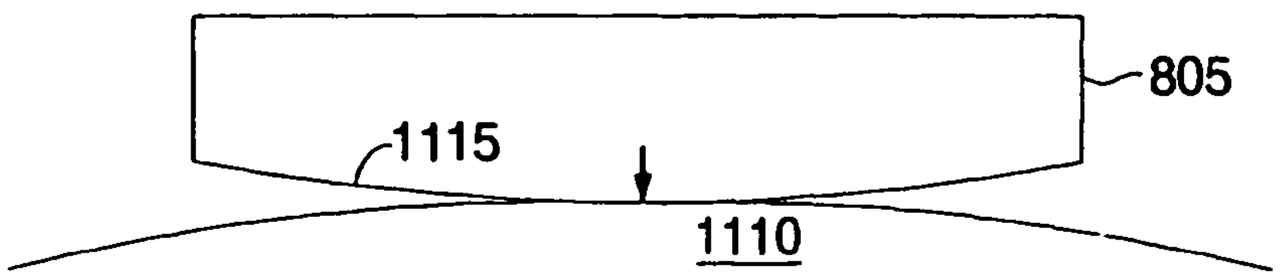

FIG. 35D

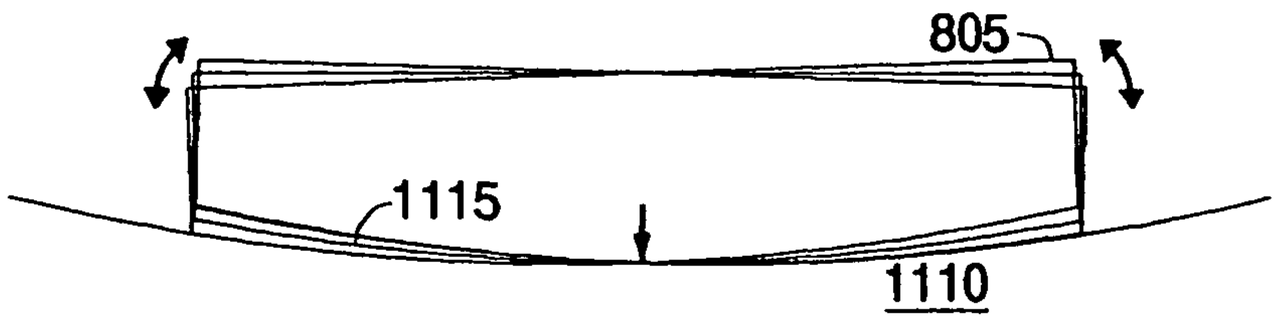

FIG. 35E

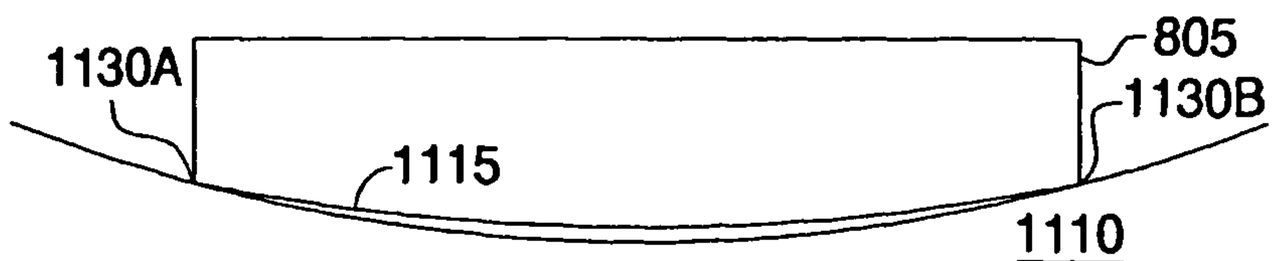

FIG. 35F

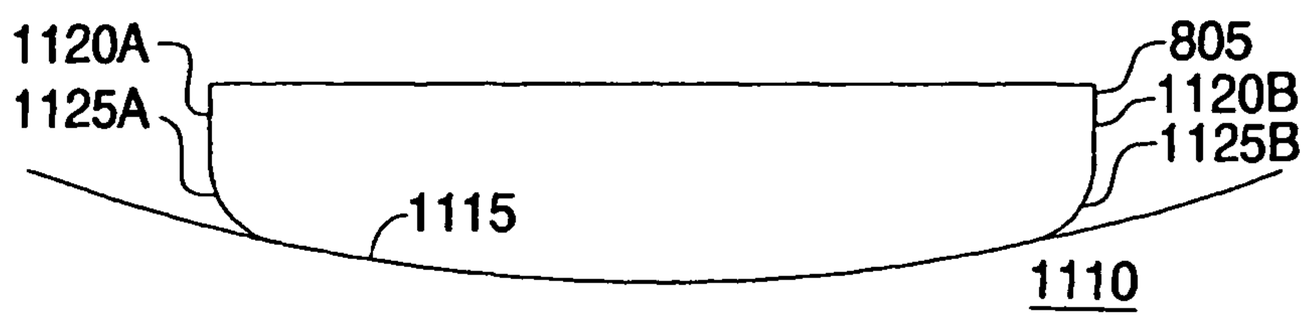

FIG. 35G

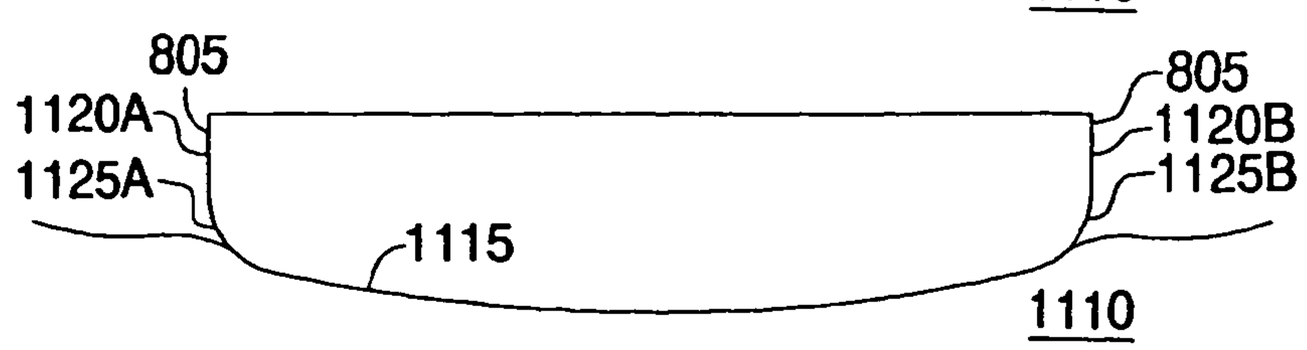

FIG. 35H

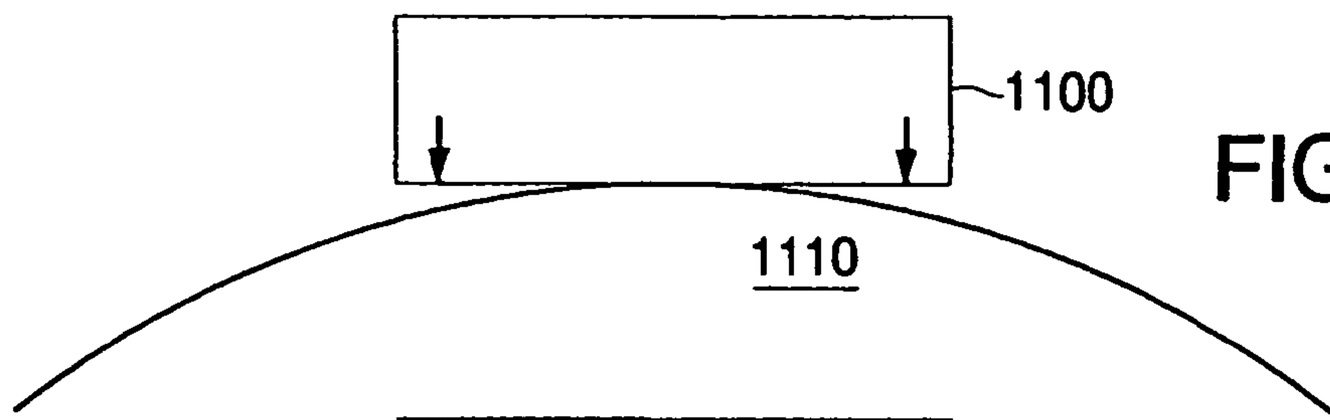

FIG. 36A

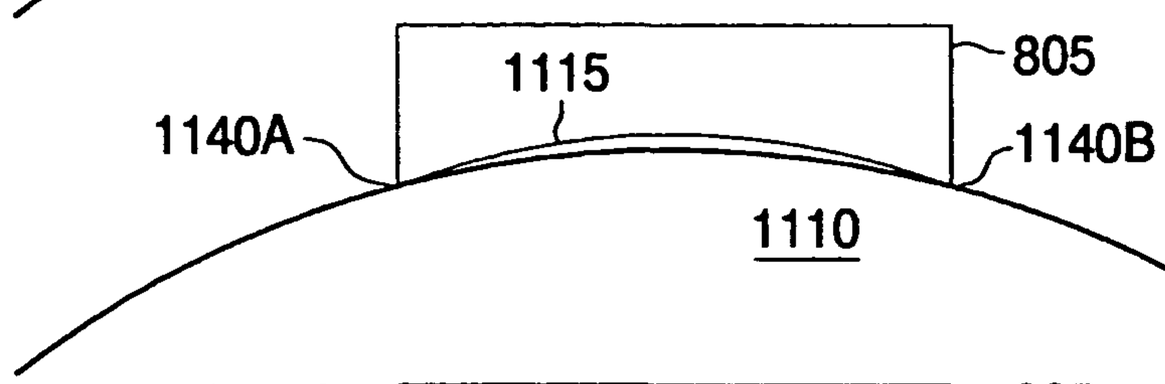

FIG. 36B

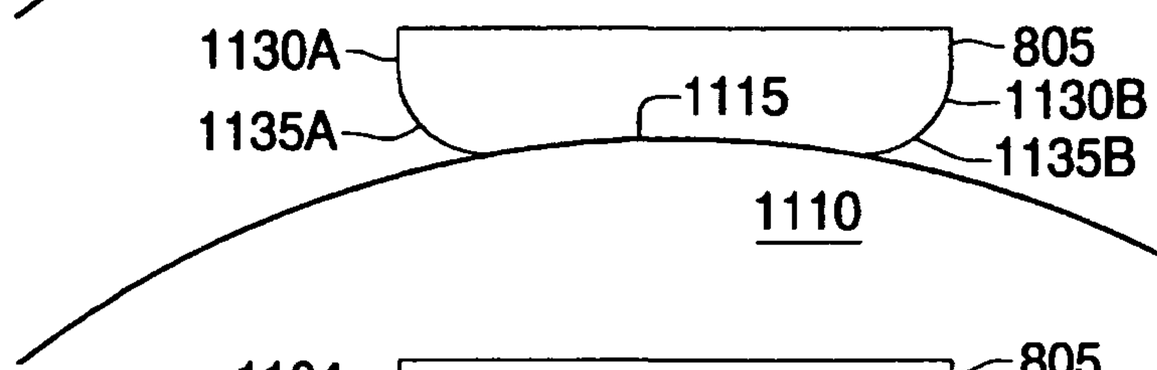

FIG. 36C

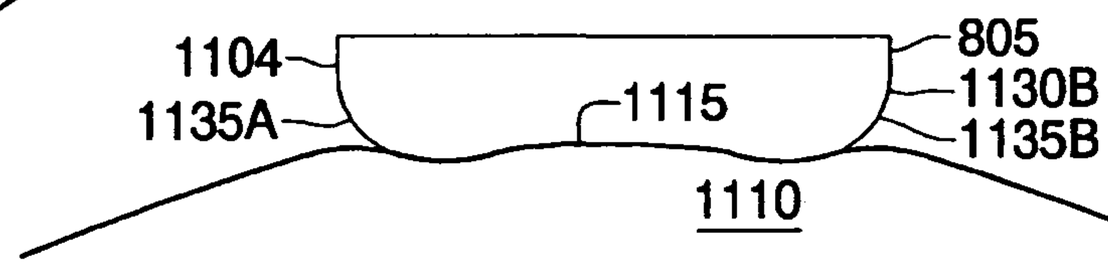

FIG. 36D

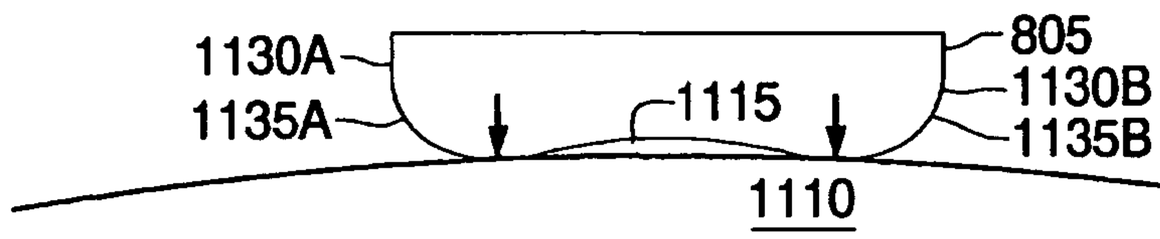

FIG. 36E

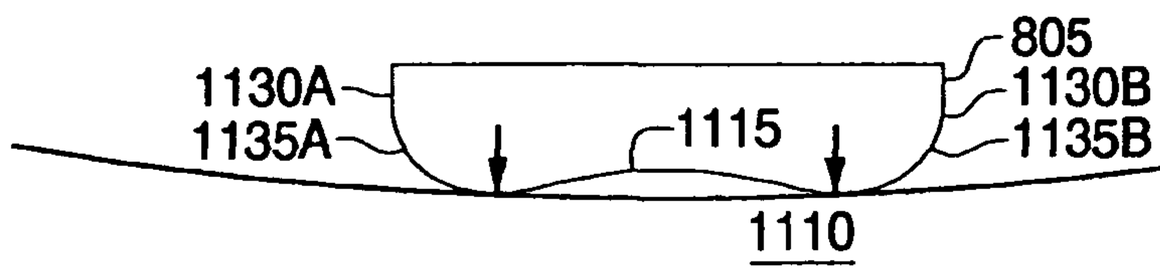

FIG. 36F

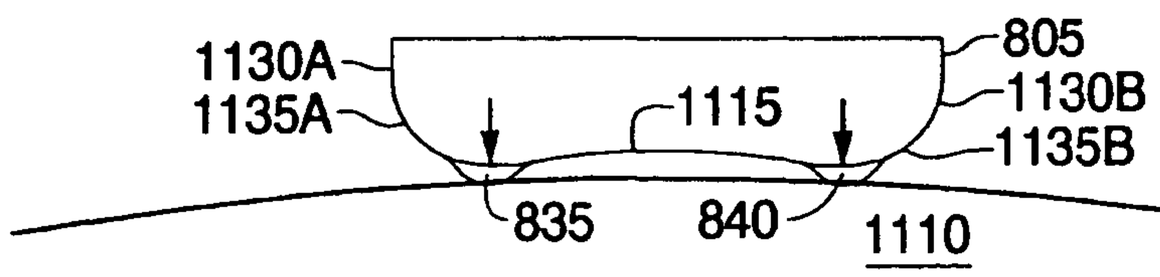

FIG. 36G

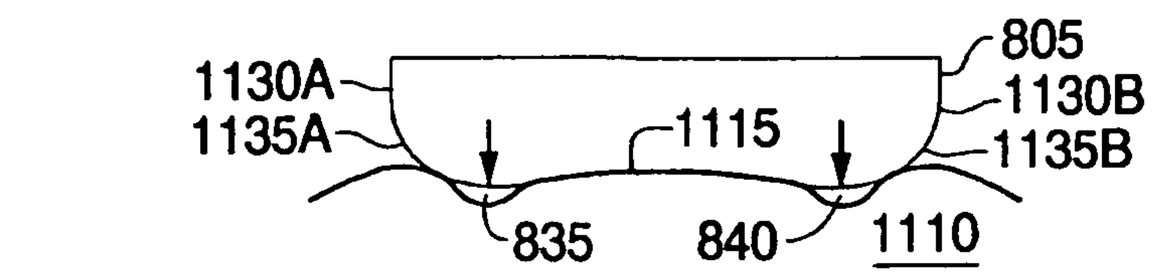

FIG. 36H

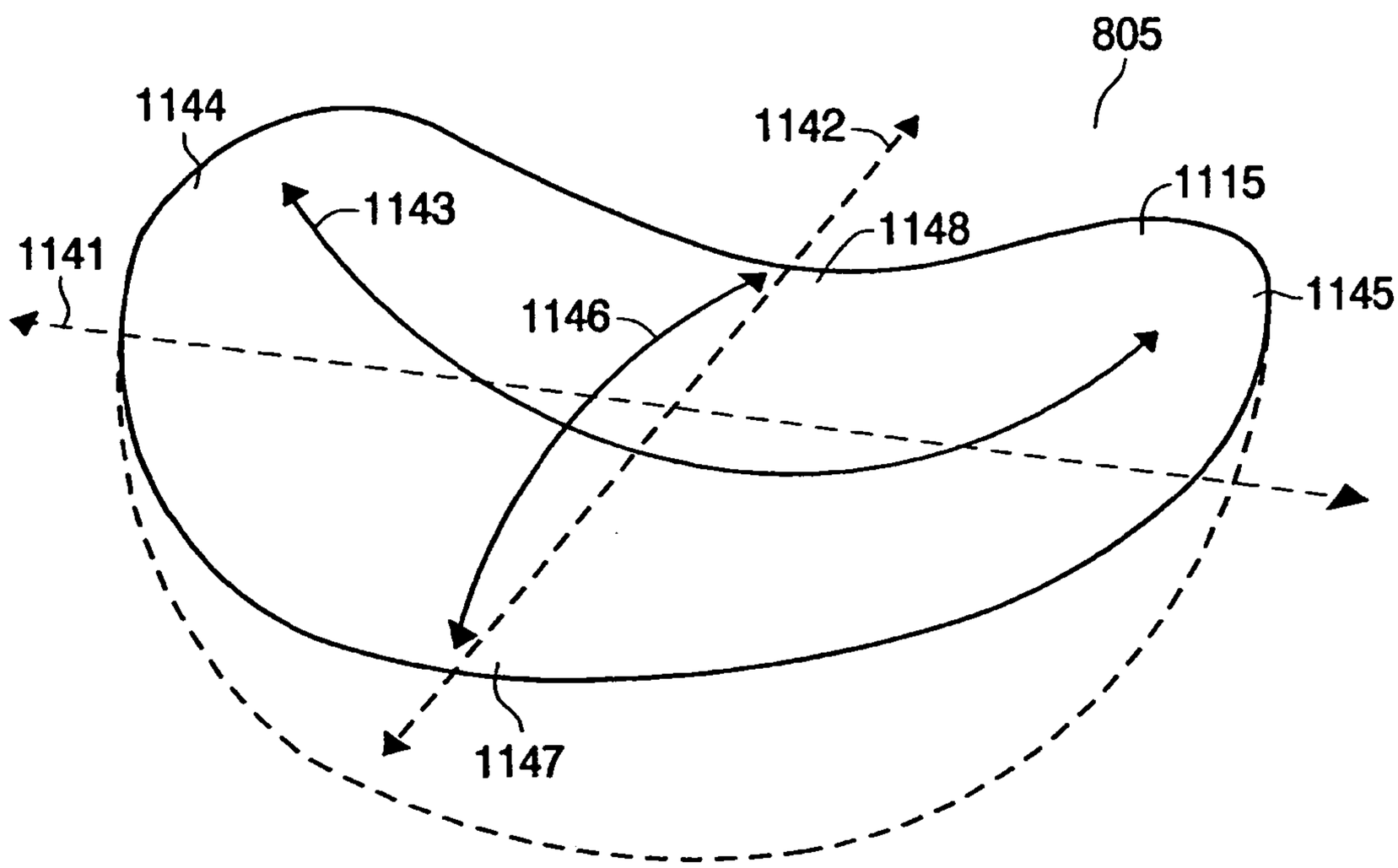

FIG. 37

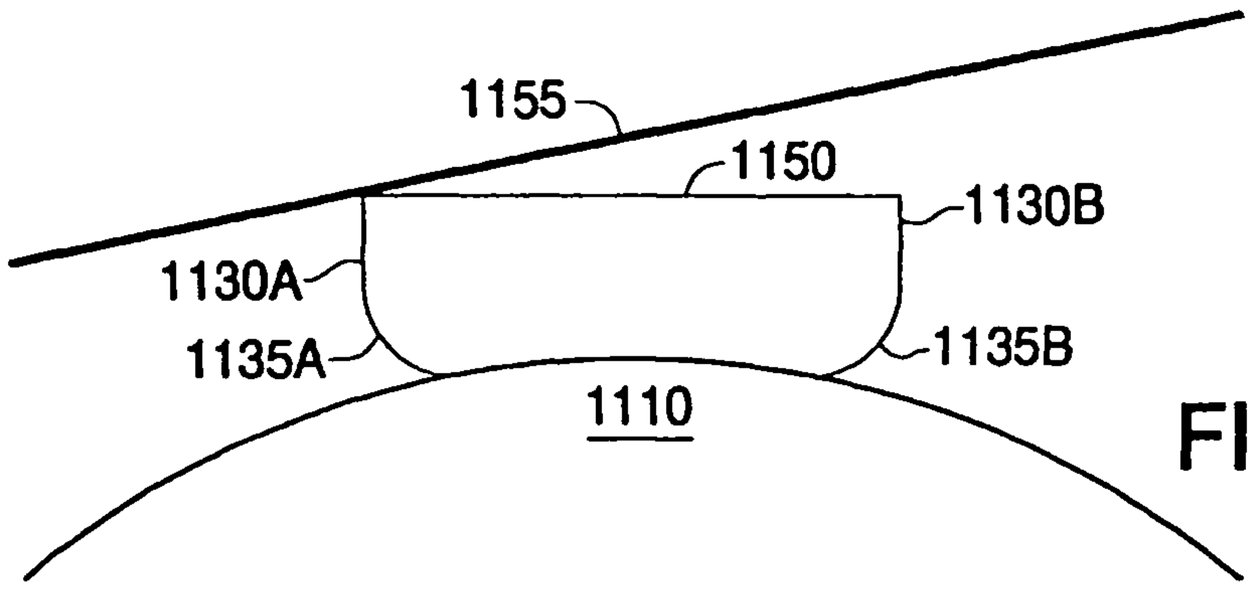

FIG. 38A

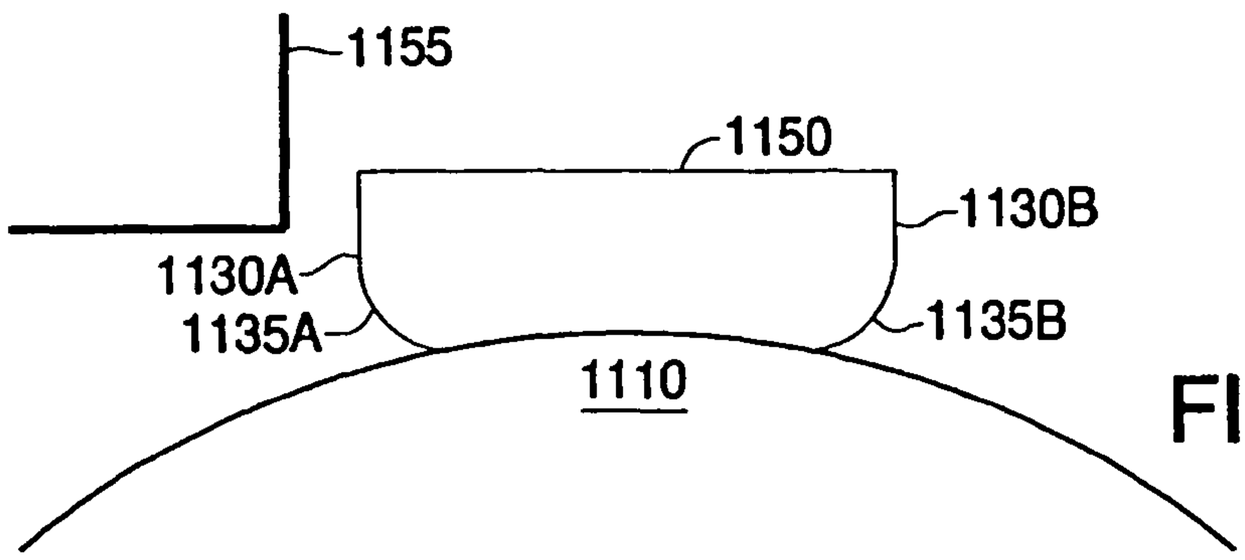

FIG. 38B

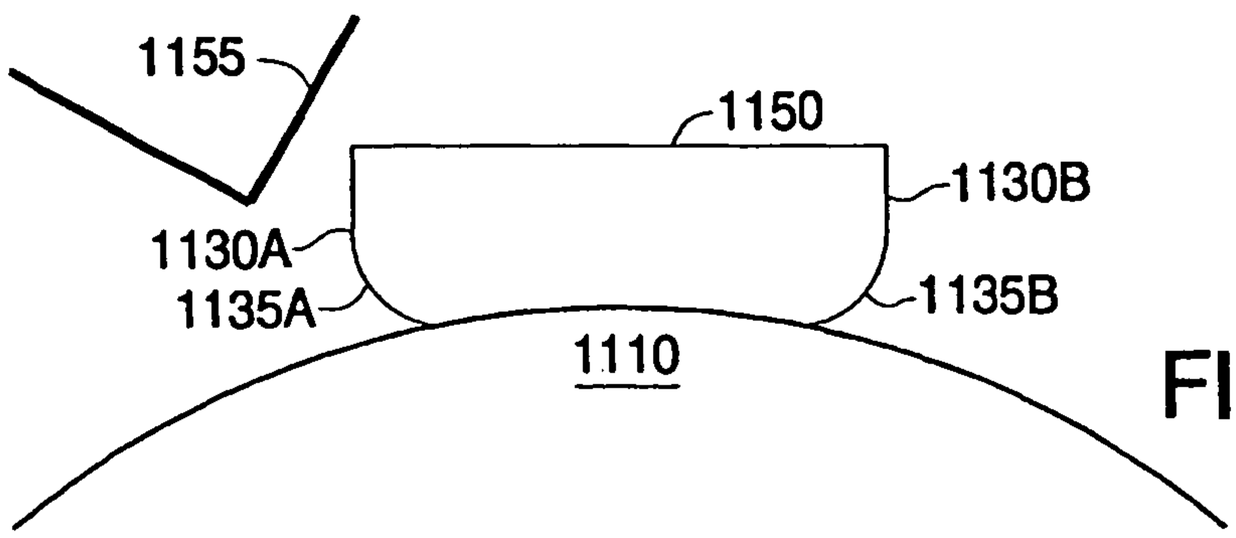

FIG. 38C

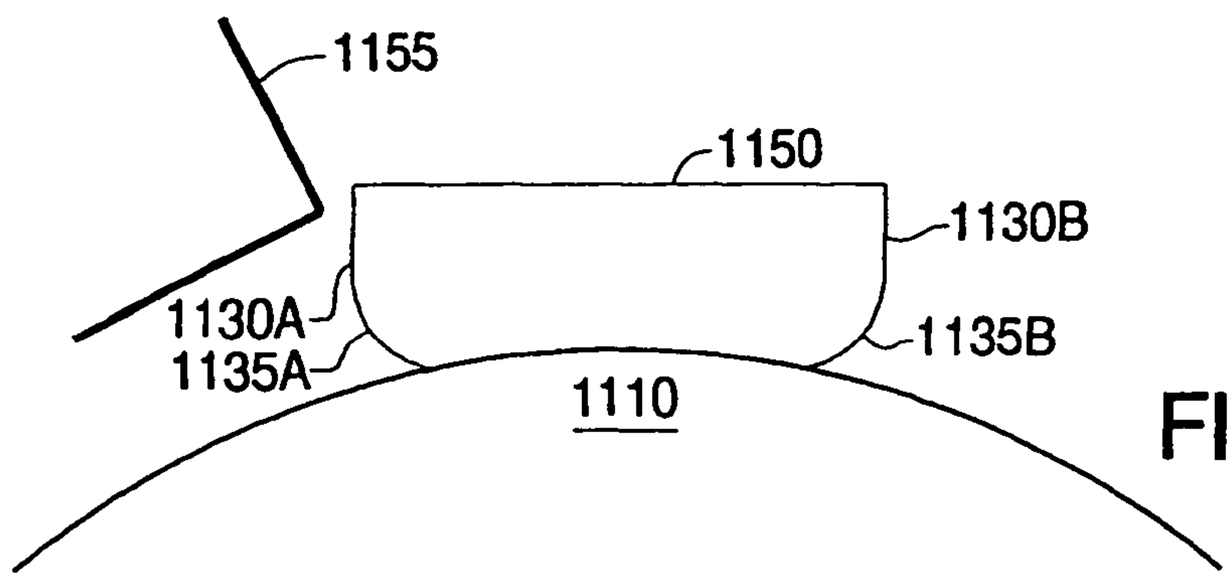

FIG. 38D

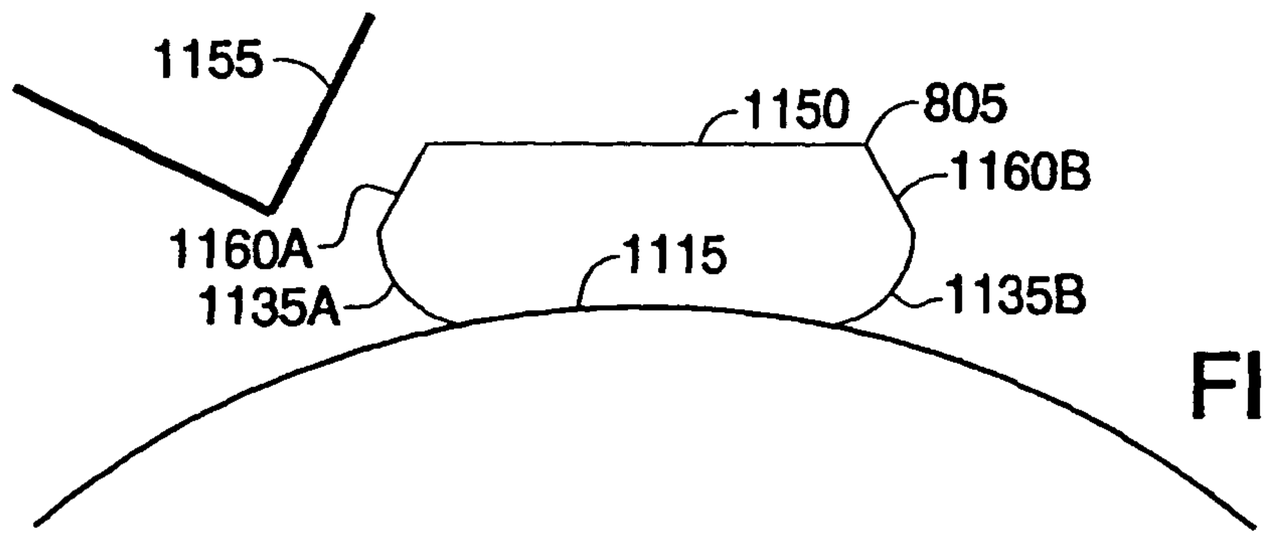

FIG. 39A

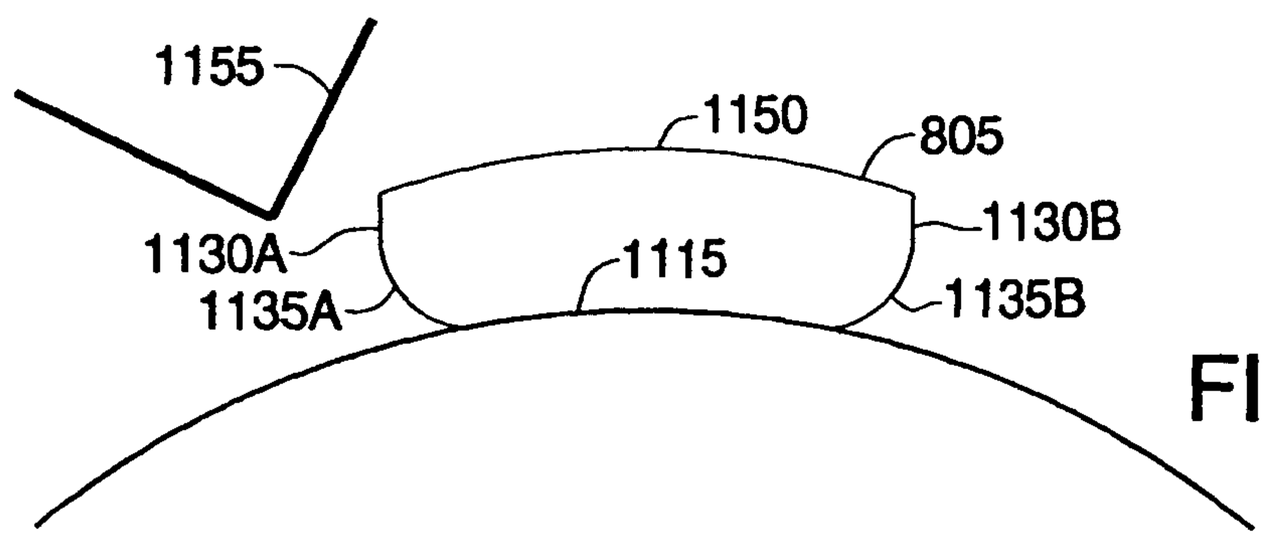

FIG. 39B

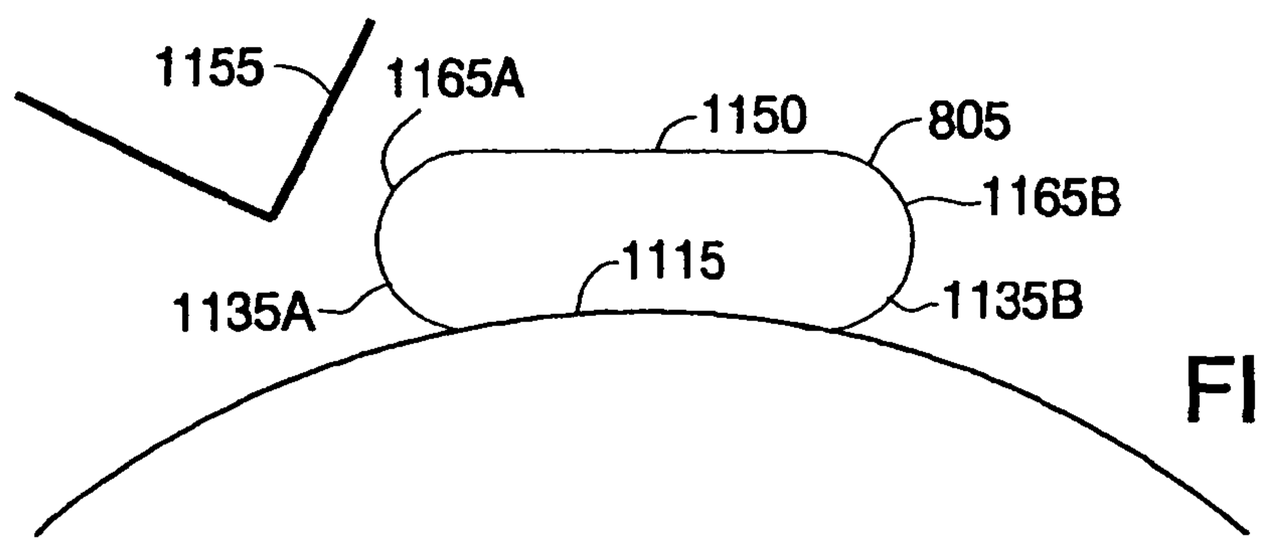

FIG. 39C

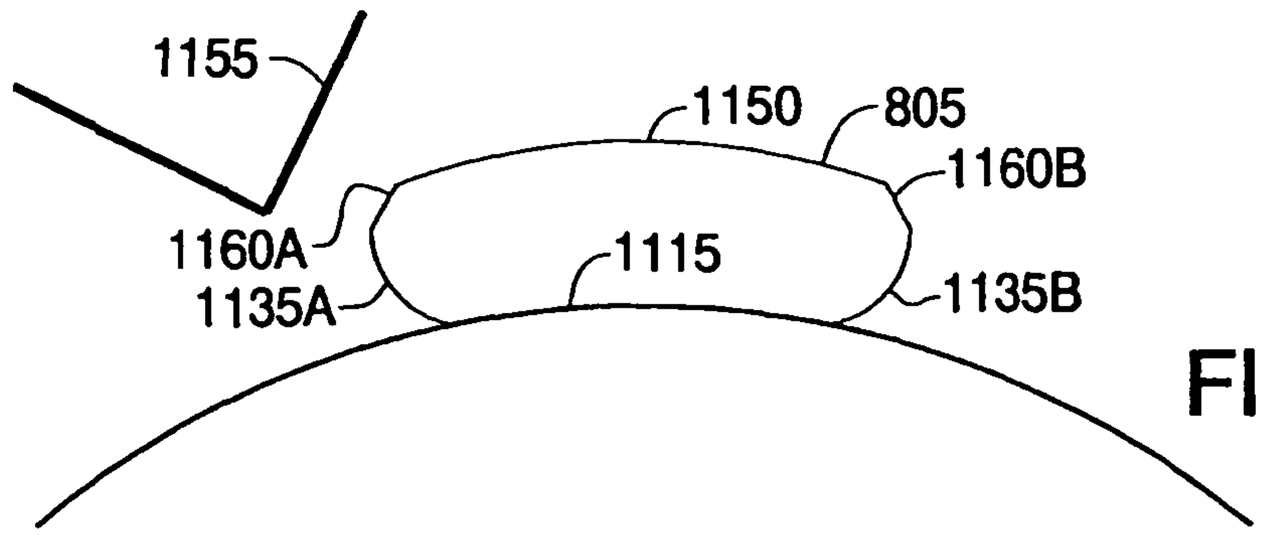

FIG. 39D

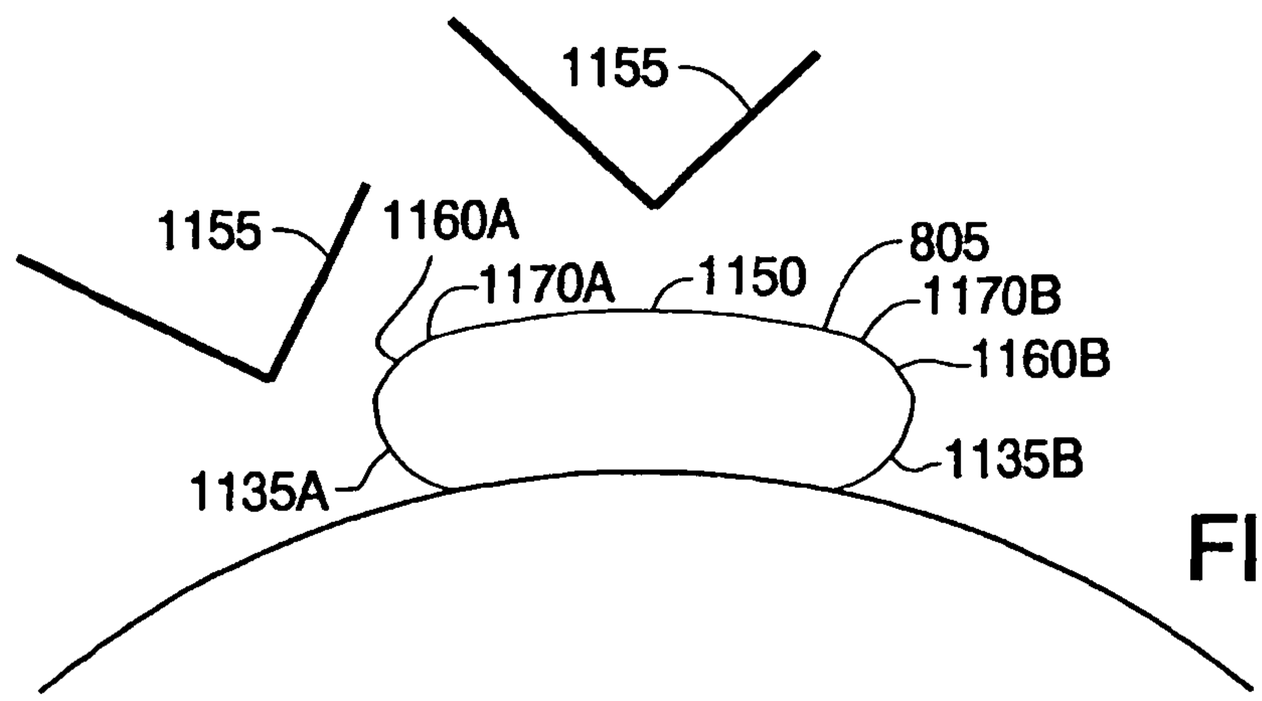

FIG. 39E

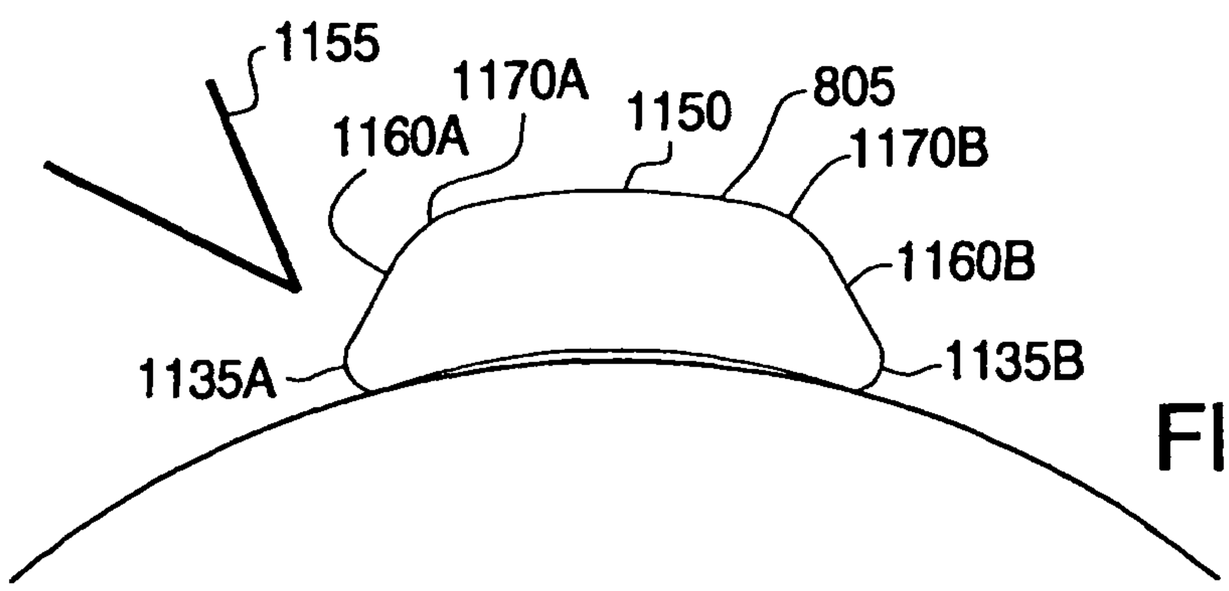

FIG. 39F

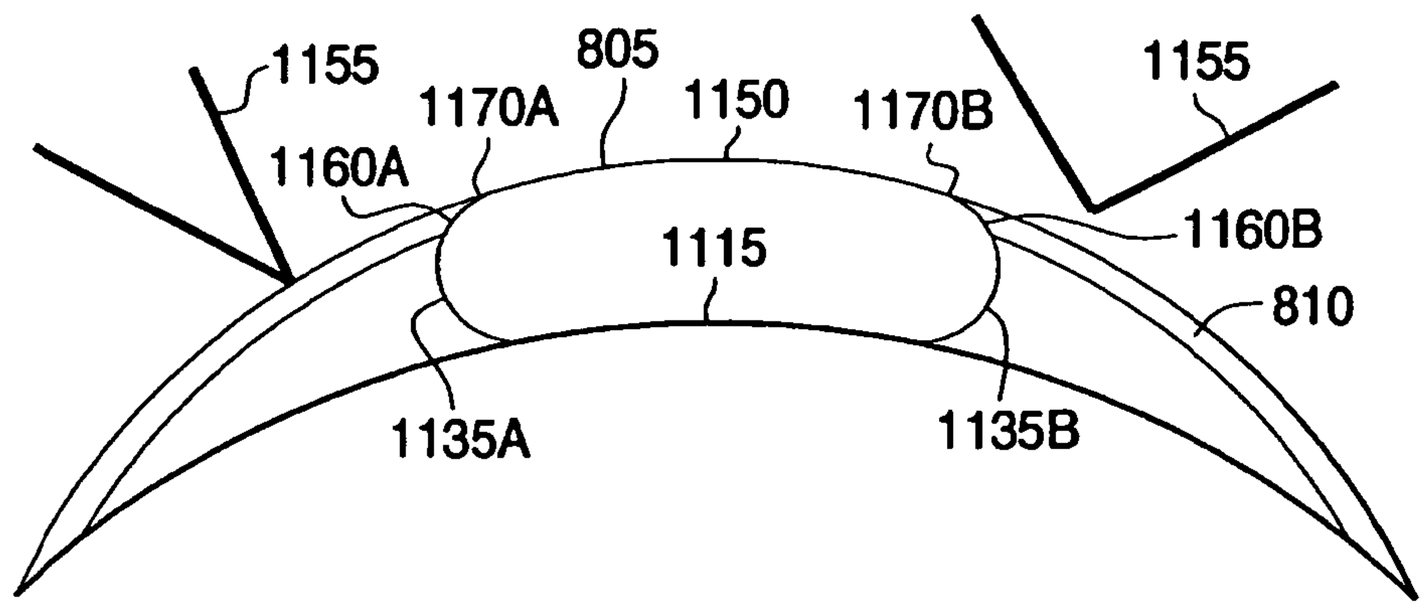
1155
805
1170A
1150
1170B
1155
1160A
1160B
1115
810
1135A
1135B

FIG. 39G

FIG. 40A.

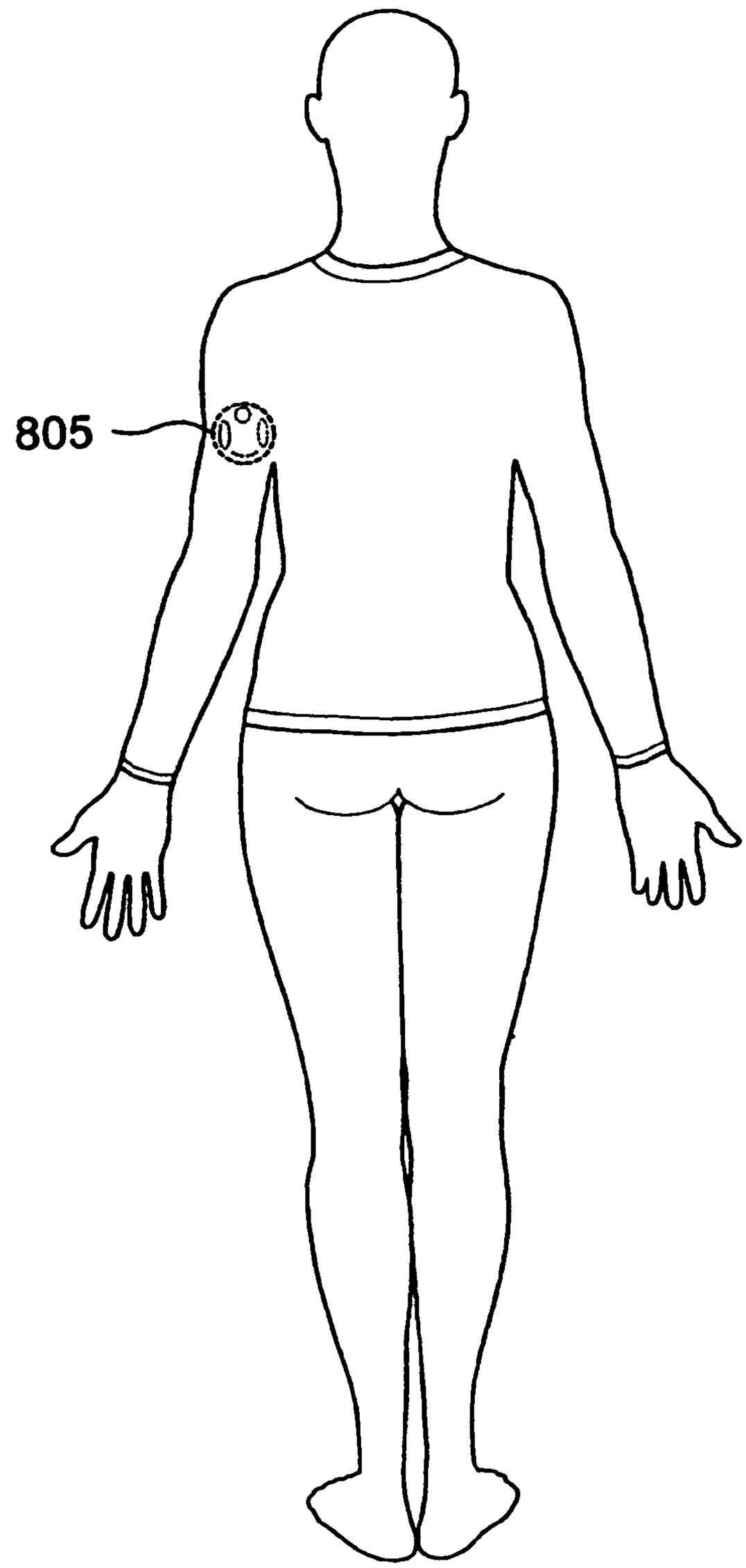

FIG. 40B.

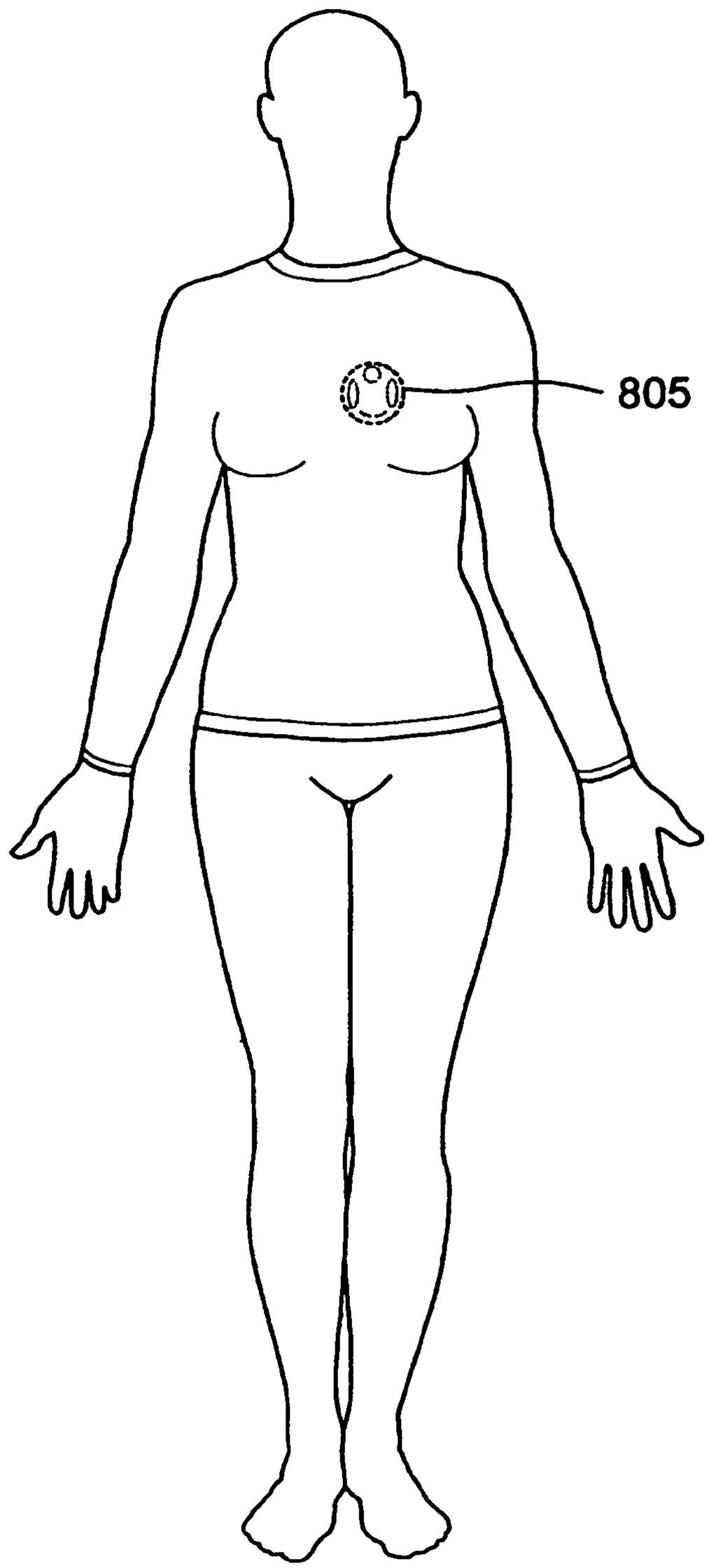

ADHESIVELY MOUNTED APPARATUS FOR DETERMINING PHYSIOLOGICAL AND CONTEXTUAL STATUS

RELATED APPLICATION DATA

This application is a divisional of U.S. patent application Ser. No. 11/239,748 filed on Sep. 30, 2005 which is a continuation of U.S. patent application Ser. No. 10/227,575 filed on Aug. 22, 2002, now issued (now U.S. Pat. No. 7,020,508, issued Mar. 28, 2006).

FIELD OF THE INVENTION

The present invention also relates to a number of embodiments of an apparatus which includes one or more sensors for collecting data relating to an individual's physiological state and various contextual parameters. Specifically, an apparatus containing two sensors that is capable of being disposed of after use.

BACKGROUND OF THE INVENTION

Research has shown that a large number of the top health problems in society are either caused in whole or in part by an unhealthy lifestyle. More and more, our society requires people to lead fast-paced, achievement-oriented lifestyles that often result in poor eating habits, high stress levels, lack of exercise, poor sleep habits and the inability to find the time to center the mind and relax. Recognizing this fact, people are becoming increasingly interested in establishing a healthier lifestyle.

Traditional medicine, embodied in the form of an HMO or similar organizations, does not have the time, the training, or the reimbursement mechanism to address the needs of those individuals interested in a healthier lifestyle. There have been several attempts to meet the needs of these individuals, including a perfusion of fitness programs and exercise equipment, dietary plans, self-help books, alternative therapies, and most recently, a plethora of health information web sites on the Internet. Each of these attempts are targeted to empower the individual to take charge and get healthy. Each of these attempts, however, addresses only part of the needs of individuals seeking a healthier lifestyle and ignores many of the real barriers that most individuals face when trying to adopt a healthier lifestyle. These barriers include the fact that the individual is often left to himself or herself to find motivation, to implement a plan for achieving a healthier lifestyle, to monitor progress, and to brainstorm solutions when problems arise; the fact that existing programs are directed to only certain aspects of a healthier lifestyle, and rarely come as a complete package; and the fact that recommendations are often not targeted to the unique characteristics of the individual or his life circumstances.

SUMMARY OF THE INVENTION

An apparatus is disclosed for detecting human physiological or contextual information from the body of an individual wearing the apparatus. The apparatus includes a flexible section that is adapted to engage a portion of the wearer's body, and a housing that is removably attached to the flexible section. The housing supports one or more physiological and/or contextual sensors and a processor in electrical communication with the sensors. According to one embodiment, the apparatus may include multiple flexible sections that may be selectively attached to the housing. The apparatus may also

have operating parameters that are adjustable depending on the particular flexible section that is attached to the housing at a particular time. The operating parameters, for example, may be adjusted through the interaction of a switch or switches provided on or in the housing and a switch activator or switch activators provided on or in each of the flexible sections. Various structures for removably attaching the housing to the flexible section are described, including, but no limited to, tongues and grooves, adhesives, magnets, and elastic bands. The apparatus may also include a wireless transceiver for transmitting information to and receiving information from a computing device.

Also described is an apparatus that is adapted to measure heat flux between the body of the wearer and the ambient environment. The apparatus includes a housing and a base member having a preselected, known resistivity mounted within the housing. The base member may comprise a printed circuit board. A first temperature measuring device is attached to a first side of the base member and a second temperature measuring device is attached to a second side of the base member. The temperature measuring devices may comprise, for example, a thermistor, a thermocouple, or a thermopile. The apparatus further includes a thermal energy communicator mounted between a portion of the body of the wearer and the first temperature measuring device. The thermal energy communicator may include one or more of a heat conduit, a thermally conductive interface material or materials, and a thermally conductive interface component in various combinations. The second temperature measuring device is in thermal communication with the ambient environment. The apparatus may include a thermal interface material and/or a thermally conductive interface component for providing thermal communication between the ambient environment and the second temperature measuring device. A processing unit is provided in the housing and is in electrical communication with the temperature measuring devices. The apparatus may further include a flexible section attached to the housing adapted to engage a portion of the body of the wearer, or a plurality of flexible sections adapted to be selectively attached to the housing. According to one embodiment, the apparatus has operating parameters that may be adjusted depending on the particular flexible section that is attached to the housing.

An apparatus for detecting, monitoring and reporting at least one of human physiological and contextual information from the body of a wearer is also described. The apparatus includes a housing having an adhesive material on at least a portion of an external surface thereof that enables the housing to be removably attached to a portion of the body of the wearer. At least two physiological and/or contextual sensors are supported by the housing. The physiological sensors are adapted to facilitate the generation of data indicative of one or more physiological parameters of the wearer and the contextual sensors are adapted to facilitate the generation of data indicative of one or more contextual parameters of the wearer. A processor is also included and is an electrical communication with the sensors. The processor generates: (i) derived data from at least one of at least a portion of the data indicative of physiological parameters and at least a portion of the data indicative of contextual parameters; and (ii) analytical status data from at least a portion of at least one of the data indicative of physiological parameters, the data indicative of contextual parameters, the derived data and the analytical status data. The apparatus further includes an electronic memory for retrievably storing at least one of the data indicative of physiological parameters, the data indicative of contextual parameters, the derived data and the analytical status data. The

apparatus is adapted to transmit to the wearer at least one of the data indicative of physiological parameters, the data indicative of contextual parameters, the derived data and the analytical status data. The housing may be made of a rigid material or a flexible material, such as a flexible plastic film. The apparatus may include a number of displays for transmitting information, including, but not limited to, an LED or an electrochemical display. The apparatus may further include a wireless transceiver for receiving information from and transmitting information to a computing device. The processor of the apparatus and the computing device may be adapted to engage in shared computing. Furthermore, a computing device may be included in the apparatus for transmitting information to the wearer. The computing device may be coupled to the processor, and the processor may be adapted to cause the computing device to trigger an event upon detection of one or more physiological conditions of the individual. The apparatus may further include various structures for manually entering information into the apparatus, such as a button or a touch pad or keyboard provided on the apparatus or on a computing device coupled to the processor. According to one embodiment, the apparatus monitors the degree to which the wearer has followed a predetermined routine. In this embodiment, the analytical status data comprises feedback to the individual relating to the degree to which the individual has followed the predetermined routine, with the feedback being generated from at least a portion of at least one of the data indicative of one or more physiological parameters of the individual, the derived data, and manually entered data. Also described is an apparatus for detecting human physiological or contextual information from the body of an individual wearing the apparatus that includes a housing having an inner surface for mounting adjacent the body and an outer surface opposite the inner surface. The inner surface includes a longitudinal axis and a transverse axis, with the inner surface being generally concave in a first direction and having an axis of concavity coincident with the longitudinal axis and generally convex in a second direction perpendicular to the first direction and having an axis of concavity coincident with the transverse axis. The inner surface may have first and second lateral ends at opposite ends of the axis of concavity, and the housing may have a first radiused portion adjacent to and including the first lateral end and a second radiused portion adjacent to and including the second lateral end. The inner surface may also have third and fourth lateral ends at opposite ends of the axis of convexity, and the housing may have a third radiused portion adjacent to and including the third lateral end and a fourth radiused portion adjacent to and including the fourth lateral end. Further, the outer surface of the housing may have a convex shape between a first lateral side and a second lateral side of the outer surface. According to one embodiment, the housing includes a width dimension as measured between a first lateral side and a second lateral side of the housing, with at least a portion of the first lateral side and second lateral side each having a taper such that the width dimension generally decreases in a direction from the inner surface to the outer surface. The apparatus may include a flexible section attached to the housing that engages the body of the wearer and has a generally convex outer surface.

Also described is an apparatus for detecting from the body of a wearer parameters relating to the heart of the wearer including an acoustic-based non-ECG heart parameter sensor that generates a first signal including a first acoustic component generated from the motion of the wearers heart and a second acoustic component generated from non-heart related motion of the body of the wearer, such as, for example, from footfalls. The apparatus also includes one or more filtering sensors, such as an accelerometer, for generating a second signal related to the non-heart related motion of the body. The second signal is used to subtract the second acoustic component from the first signal to generate a third signal, with the third signal being used to generate the heart related parameters. The first signal may also include an acoustic component generated from ambient noise, and the apparatus may include an ambient noise sensor. In this configuration, the signal form the ambient noise sensor is used to subtract out the acoustic component generated from ambient noise from the signal that is used to generate the heart related parameters.

In addition, a method is disclosed for detecting from the body of a wearer parameters relating to the heart of the wearer. The method comprises steps of generating a first acoustic signal including a first acoustic component generated from the motion of the wearer's heart and a second acoustic component generated from non-heart related motion of the body of the wearer, generating a second signal related to the non-heart related motion of the body, generating a third signal by using the second signal to subtract the second acoustic component from the first signal, and generating the heart related parameters from the third signal. The first acoustic signal may further include a third acoustic component generated from ambient noise and the method may further comprise generating a fourth signal related to the ambient noise with the step of generating the third signal further comprising using the fourth signal to subtract the third acoustic component from the first signal.

BRIEF DESCRIPTION OF THE DRAWINGS

Further features and advantages of the present invention will be apparent upon consideration of the following detailed description of the present invention, taken in conjunction with the following drawings, in which like reference characters refer to like parts, and in which:

FIG. **1** is a diagram of an embodiment of a system for monitoring physiological data and lifestyle over an electronic network according to the present invention;

FIG. **2** is a block diagram of an embodiment of the sensor device shown in FIG. **1**;

FIG. **3** is a block diagram of an embodiment of the central monitoring unit shown in FIG. **1**;

FIG. **4** is a block diagram of an alternate embodiment of the central monitoring unit shown in FIG. **1**;

FIG. **5** is a representation of a preferred embodiment of the Health Manager web page according to an aspect of the present invention;

FIG. **6** is a representation of a preferred embodiment of the nutrition web page according to an aspect of the present invention;

FIG. **7** is a representation of a preferred embodiment of the activity level web page according to an aspect of the present invention;

FIG. **8** is a representation of a preferred embodiment of the mind centering web page according to an aspect of the present invention;

FIG. **9** is a representation of a preferred embodiment of the sleep web page according to an aspect of the present invention;

FIG. **10** is a representation of a preferred embodiment of the daily activities web page according to an aspect of the present invention;

FIG. **11** is a representation of a preferred embodiment of the Health Index web page according to an aspect of the present invention;

FIG. **12** is a front view of a specific embodiment of the sensor device shown in FIG. **1**;

FIG. **13** is a back view of a specific embodiment of the sensor device shown in FIG. **1**;

FIG. **14** is a side view of a specific embodiment of the sensor device shown in FIG. **1**;

FIG. **15** is a bottom view of a specific embodiment of the sensor device shown in FIG. **1**;

FIGS. **16** and **17** are front perspective views of a specific embodiment of the sensor device shown in FIG. **1**;

FIG. **18** is an exploded side perspective view of a specific embodiment of the sensor device shown in FIG. **1**;

FIG. **19** is a side view of the sensor device shown in FIGS. **12** through **18** inserted into a battery recharger unit;

FIG. **20** is a block diagram illustrating all of the components either mounted on or coupled to the printed circuit board forming a part of the sensor device shown in FIGS. **12** through **18**; and

FIG. **21** is a block diagram of an apparatus for monitoring health, wellness and fitness according to an alternate embodiment of the present invention.

FIG. **22** is a front view of an alternate embodiment of a sensor device according to the present invention;

FIG. **23** is a back view of an alternate embodiment of a sensor device according to the present invention;

FIG. **24** is a cross-sectional view of the sensor device shown in FIG. **22** taken along lines A-A;

FIG. **25** is a cross-sectional view of the sensor device shown in FIG. **22** taken along lines B-B;

FIG. **26** is a cross-sectional view of the sensor device shown in FIG. **22** taken along lines A-A showing the internal components of the housing of the sensor device;

FIG. **27** is a block diagram illustrating the components mounted on or coupled to the printed circuit board forming a part of an embodiment of the sensor device shown in FIGS. **22** through **26**;

FIG. **28** is a front view of an alternate embodiment of a sensor device according to the present invention including an LCD;

FIG. **29** is a block diagram illustrating the components mounted on or coupled to the printed circuit board forming a part of an alternate embodiment of the sensor device shown in FIGS. **22** through **26**;

FIGS. **30** and **31** are isometric views of an alternate embodiment of a sensor device according to the present invention having a housing adapted to be removably attached to a flexible section;

FIG. **32** is an isometric view of a further alternate embodiment of a sensor device according to the present invention having a housing adapted to be removably attached to a flexible section;

FIG. **33** is an isometric view of an embodiment of a sensor device having adjustable operating parameters according to an aspect of the present invention;

FIG. **34** is an isometric view of an alternate embodiment of a sensor device according to the present invention having a housing having an adhesive material on an external surface thereof for removably attaching the housing to the body;

FIGS. **35**A and B are cross-sectional views of a housing for a prior art sensor device;

FIGS. **35**C through H are cross-sectional views of various embodiments of a housing for a sensor device according to an aspect of the present invention taken along lines C-C in FIG. **23**.

FIG. **36**A is a cross-sectional view of a housing for a prior art sensor device;

FIGS. **36**B through H are cross-sectional views of various embodiments of a housing for a sensor device according to an aspect of the present invention taken along lines D-D in FIG. **23**;

FIG. **37** is an isometric view of an embodiment of a housing for a sensor device according to the present invention having a bottom or inner surface having a concavity in one direction and a convexity in another direction;

FIGS. **38**A through D are cross-sectional views of a housing for a sensor device having a flat top surface and flat lateral ends;

FIGS. **39**A through F are cross-sectional views of various embodiments of a housing for a sensor device having surfaces designed to deflect objects and prevent movement of the housing; and

FIG. **39**G is a cross-sectional view of the housing shown in FIG. **39**E attached to a flexible section.

FIG. **40**A is an elevational drawing of the sensor device mounted within a garment on the upper arm of a wearer.

FIG. **40**B is an elevational drawing of the sensor device mounted within a garment on the left chest area of a wearer.

DESCRIPTION OF THE PREFERRED EMBODIMENTS

In general, according to the present invention, data relating to the physiological state, the lifestyle and certain contextual parameters of an individual is collected and transmitted, either subsequently or in real-time, to a site, preferably remote from the individual, where it is stored for later manipulation and presentation to a recipient, preferably over an electronic network such as the Internet. Contextual parameters as used herein means parameters relating to the environment, surroundings and location of the individual, including, but not limited to, air quality, sound quality, ambient temperature, global positioning and the like. Referring to FIG. **1**, located at user location **5** is sensor device **10** adapted to be placed in proximity with at least a portion of the human body. Sensor device **10** is preferably worn by an individual user on his or her body, for example as part of a garment such as a form fitting shirt, or as part of an arm band or the like. Sensor device **10**, includes one or more sensors, which are adapted to generate signals in response to physiological characteristics of an individual, and a microprocessor. Proximity as used herein means that the sensors of sensor device **10** are separated from the individual's body by a material or the like, or a distance such that the capabilities of the sensors are not impeded.

Sensor device **10** generates data indicative of various physiological parameters of an individual, such as the individual's heart rate, pulse rate, beat-to-beat heart variability, EKG or ECG, respiration rate, skin temperature, core body temperature, heat flow off the body, galvanic skin response or GSR, EMG, EEG, EOG, blood pressure, body fat, hydration level, activity level, oxygen consumption, glucose or blood sugar level, body position, pressure on muscles or bones, and UV radiation exposure and absorption. In certain cases, the data indicative of the various physiological parameters is the signal or signals themselves generated by the one or more sensors and in certain other cases the data is calculated by the microprocessor based on the signal or signals generated by the one or more sensors. Methods for generating data indicative of various physiological parameters and sensors to be used therefor are well known. Table 1 provides several examples of such well known methods and shows the parameter in question, the method used, the sensor device used, and the signal that is generated. Table 1 also provides an indication as to whether further processing based on the generated signal is required to generate the data.

TABLE 1

Parameter	Method	Sensor	Signal	Further Processing
Heart Rate	EKG	2 Electrodes	DC Voltage	Yes
Pulse Rate	BVP	LED Emitter and Optical Sensor	Change in Resistance	Yes
Beat-to-Beat Variability	Heart Rate	2 Electrodes	DC Voltage	Yes
EKG	Skin Surface Potentials	3-10 Electrodes	DC Voltage	No
Respiration Rate	Chest Volume Change	Strain Gauge	Change in Resistance	Yes
Skin Temperature	Surface Temperature Probe	Thermistors	Change in Resistance	Yes
Core Temperature	Esophageal or Rectal Probe	Thermistors	Change in Resistance	Yes
Heat Flow	Heat Flux	Thermopile	DC Voltage	Yes
Galvanic Skin Response	Skin Conductance	2 Electrodes	Change in Resistance	No
EMG	Skin Surface Potentials	3 Electrodes	DC Voltage	No
EEG	Skin Surface Potentials	Multiple Electrodes	DC Voltage	Yes
EOG	Eye Movement	Thin Film Piezoelectric Sensors	DC Voltage	Yes
Blood Pressure	Non-Invasive Korotkuff Sounds	Electronic Sphygromarometer	Change in Resistance	Yes
Body Fat	Body Impedance	2 Active Electrodes	Change in Impedance	Yes
Activity in Interpreted G Shocks per Minute	Body Movement	Accelerometer	DC Voltage, Capacitance Changes	Yes
Oxygen Consumption	Oxygen Uptake	Electro-chemical	DC Voltage Change	Yes
Glucose Level	Non-Invasive	Electro-chemical	DC Voltage Change	Yes
Body Position (e.g. supine, erect, sitting)	N/A	Mercury Switch Array	DC Voltage Change	Yes
Muscle Pressure	N/A	Thin Film Piezoelectric Sensors	DC Voltage Change	Yes
UV Radiation Absorption	N/A	UV Sensitive Photo Cells	DC Voltage Change	Yes

The types of data listed in Table 1 are intended to be examples of the types of data that can be generated by sensor device **10**. It is to be understood that other types of data relating to other parameters can be generated by sensor device **10** without departing from the scope of the present invention.

The microprocessor of sensor device **10** may be programmed to summarize and analyze the data. For example, the microprocessor can be programmed to calculate an average, minimum or maximum heart rate or respiration rate over a defined period of time, such as ten minutes. Sensor device **10** may be able to derive information relating to an individual's physiological state based on the data indicative of one or more physiological parameters. The microprocessor of sensor device **10** is programmed to derive such information using known methods based on the data indicative of one or more physiological parameters. Table 2 provides examples of the type of information that can be derived, and indicates some of the types of data that can be used therefor.

TABLE 2

Derived Information	Data Used
Ovulation	Skin temperature, core temperature, oxygen consumption

TABLE 2-continued

Derived Information	Data Used
Sleep onset/wake	Beat-to-beat variability, heart rate, pulse rate, respiration rate, skin temperature, core temperature, heat flow, galvanic skin response, EMG, EEG, EOG, blood pressure, oxygen consumption
Calories burned	Heart rate, pulse rate, respiration rate, heat flow, activity, oxygen consumption
Basal metabolic rate	Heart rate, pulse rate, respiration rate, heat flow, activity, oxygen consumption
Basal temperature	Skin temperature, core temperature
Activity level	Heart rate, pulse rate, respiration rate, heat flow, activity, oxygen consumption
Stress level	EKG, beat-to-beat variability, heart rate, pulse rate, respiration rate, skin temperature, heat flow, galvanic skin response, EMG, EEG, blood pressure, activity, oxygen consumption
Relaxation level	EKG, beat-to-beat variability, heart rate, pulse rate, respiration rate, skin temperature, heat flow, galvanic skin response, EMG, EEG, blood pressure, activity, oxygen consumption
Maximum oxygen consumption rate	EKG, heart rate, pulse rate, respiration rate, heat flow, blood pressure, activity, oxygen consumption
Rise time or the time it takes to rise from a resting rate to 85% of a target maximum	Heart rate, pulse rate, heat flow, oxygen consumption

TABLE 2-continued

Derived Information	Data Used
Time in zone or the time heart rate was above 85% of a target maximum	Heart rate, pulse rate, heat flow, oxygen consumption
Recovery time or the time it takes heart rate to return to a resting rate after heart rate was above 85% of a target maximum	Heart rate, pulse rate, heat flow, oxygen consumption

Additionally, sensor device **10** may also generate data indicative of various contextual parameters relating to the environment surrounding the individual. For example, sensor device **10** can generate data indicative of the air quality, sound level/quality, light quality or ambient temperature near the individual, or even the global positioning of the individual. Sensor device **10** may include one or more sensors for generating signals in response to contextual characteristics relating to the environment surrounding the individual, the signals ultimately being used to generate the type of data described above. Such sensors are well known, as are methods for generating contextual parametric data such as air quality, sound level/quality, ambient temperature and global positioning.

FIG. **2** is a block diagram of an embodiment of sensor device **10**. Sensor device **10** includes at least one sensor **12** and microprocessor **20**. Depending upon the nature of the signal generated by sensor **12**, the signal can be sent through one or more of amplifier **14**, conditioning circuit **16**, and analog-to-digital converter **18**, before being sent to microprocessor **20**. For example, where sensor **12** generates an analog signal in need of amplification and filtering, that signal can be sent to amplifier **14**, and then on to conditioning circuit **16**, which may, for example, be a band pass filter. The amplified and conditioned analog signal can then be transferred to analog-to-digital converter **18**, where it is converted to a digital signal. The digital signal is then sent to microprocessor **20**. Alternatively, if sensor **12** generates a digital signal, that signal can be sent directly to microprocessor **20**.

A digital signal or signals representing certain physiological and/or contextual characteristics of the individual user may be used by microprocessor **20** to calculate or generate data indicative of physiological and/or contextual parameters of the individual user. Microprocessor **20** is programmed to derive information relating to at least one aspect of the individual's physiological state. It should be understood that microprocessor **20** may also comprise other forms of processors or processing devices, such as a microcontroller, or any other device that can be programmed to perform the functionality described herein.

The data indicative of physiological and/or contextual parameters can, according to one embodiment of the present invention, be sent to memory **22**, such as flash memory, where it is stored until uploaded in the manner to be described below. Although memory **22** is shown in FIG. **2** as a discrete element, it will be appreciated that it may also be part of microprocessor **20**. Sensor device **10** also includes input/output circuitry **24**, which is adapted to output and receive as input certain data signals in the manners to be described herein. Thus, memory **22** of the sensor device **10** will build up, over time, a store of data relating to the individual user's body and/or environment. That data is periodically uploaded from sensor device **10** and sent to remote central monitoring unit **30**, as shown in FIG. **1**, where it is stored in a database for subsequent processing and presentation to the user, preferably through a local or global electronic network such as the Internet. This uploading of data can be an automatic process that is initiated by sensor device **10** periodically or upon the happening of an event such as the detection by sensor device **10** of a heart rate below a certain level, or can be initiated by the individual user or some third party authorized by the user, preferably according to some periodic schedule, such as every day at 10:00 p.m. Alternatively, rather than storing data in memory **22**, sensor device **10** may continuously upload data in real time.

The uploading of data from sensor device **10** to central monitoring unit **30** for storage can be accomplished in various ways. In one embodiment, the data collected by sensor device **10** is uploaded by first transferring the data to personal computer **35** shown in FIG. **1** by means of physical connection **40**, which, for example, may be a serial connection such as an RS232 or USB port. This physical connection may also be accomplished by using a cradle, not shown, that is electronically coupled to personal computer **35** into which sensor device **10** can be inserted, as is common with many commercially available personal digital assistants. The uploading of data could be initiated by then pressing a button on the cradle or could be initiated automatically upon insertion of sensor device **10**. The data collected by sensor device **10** may be uploaded by first transferring the data to personal computer **35** by means of short-range wireless transmission, such as infrared or RF transmission, as indicated at **45**.

Once the data is received by personal computer **35**, it is optionally compressed and encrypted by any one of a variety of well known methods and then sent out over a local or global electronic network, preferably the Internet, to central monitoring unit **30**. It should be noted that personal computer **35** can be replaced by any computing device that has access to and that can transmit and receive data through the electronic network, such as, for example, a personal digital assistant such as the Palm VII sold by Palm, Inc., or the Blackberry 2-way pager sold by Research in Motion, Inc.

Alternatively, the data collected by sensor device **10**, after being encrypted and, optionally, compressed by microprocessor **20**, may be transferred to wireless device **50**, such as a 2-way pager or cellular phone, for subsequent long distance wireless transmission to local telco site **55** using a wireless protocol such as e-mail or as ASCII or binary data. Local telco site **55** includes tower **60** that receives the wireless transmission from wireless device **50** and computer **65** connected to tower **60**. According to the preferred embodiment, computer **65** has access to the relevant electronic network, such as the Internet, and is used to transmit the data received in the form of the wireless transmission to the central monitoring unit **30** over the Internet. Although wireless device **50** is shown in FIG. **1** as a discrete device coupled to sensor device **10**, it or a device having the same or similar functionality may be embedded as part of sensor device **10**.

Sensor device **10** may be provided with a button to be used to time stamp events such as time to bed, wake time, and time of meals. These time stamps are stored in sensor device **10** and are uploaded to central monitoring unit **30** with the rest of the data as described above. The time stamps may include a digitally recorded voice message that, after being uploaded to central monitoring unit **30**, are translated using voice recognition technology into text or some other information format that can be used by central monitoring unit **30**.

In addition to using sensor device **10** to automatically collect physiological data relating to an individual user, a kiosk could be adapted to collect such data by, for example,

weighing the individual, providing a sensing device similar to sensor device **10** on which an individual places his or her hand or another part of his or her body, or by scanning the individual's body using, for example, laser technology or an iStat blood analyzer. The kiosk would be provided with processing capability as described herein and access to the relevant electronic network, and would thus be adapted to send the collected data to the central monitoring unit **30** through the electronic network. A desktop sensing device, again similar to sensor device **10**, on which an individual places his or her hand or another part of his or her body may also be provided. For example, such a desktop sensing device could be a blood pressure monitor in which an individual places his or her arm. An individual might also wear a ring having a sensor device **10** incorporated therein. A base, not shown, could then be provided which is adapted to be coupled to the ring. The desktop sensing device or the base just described may then be coupled to a computer such as personal computer **35** by means of a physical or short range wireless connection so that the collected data could be uploaded to central monitoring unit **30** over the relevant electronic network in the manner described above. A mobile device such as, for example, a personal digital assistant, might also be provided with a sensor device **10** incorporated therein. Such a sensor device **10** would be adapted to collect data when mobile device is placed in proximity with the individual's body, such as by holding the device in the palm of one's hand, and upload the collected data to central monitoring unit **30** in any of the ways described herein.

Furthermore, in addition to collecting data by automatically sensing such data in the manners described above, individuals can also manually provide data relating to various life activities that is ultimately transferred to and stored at central monitoring unit **30**. An individual user can access a web site maintained by central monitoring unit **30** and can directly input information relating to life activities by entering text freely, by responding to questions posed by the web site, or by clicking through dialog boxes provided by the web site. Central monitoring unit **30** can also be adapted to periodically send electronic mail messages containing questions designed to elicit information relating to life activities to personal computer **35** or to some other device that can receive electronic mail, such as a personal digital assistant, a pager, or a cellular phone. The individual would then provide data relating to life activities to central monitoring unit **30** by responding to the appropriate electronic mail message with the relevant data. Central monitoring unit **30** may also be adapted to place a telephone call to an individual user in which certain questions would be posed to the individual user. The user could respond to the questions by entering information using a telephone keypad, or by voice, in which case conventional voice recognition technology would be used by central monitoring unit **30** to receive and process the response. The telephone call may also be initiated by the user, in which case the user could speak to a person directly or enter information using the keypad or by voice/voice recognition technology. Central monitoring unit **30** may also be given access to a source of information controlled by the user, for example the user's electronic calendar such as that provided with the Outlook product sold by Microsoft Corporation of Redmond, Wash., from which it could automatically collect information. The data relating to life activities may relate to the eating, sleep, exercise, mind centering or relaxation, and/or daily living habits, patterns and/or activities of the individual. Thus, sample questions may include: What did you have for lunch today? What time did you go to sleep last night? What time did you wake up this morning? How long did you run on the treadmill today?

Feedback may also be provided to a user directly through sensor device **10** in a visual form, for example through an LED or LCD or by constructing sensor device **10**, at least in part, of a thermochromatic plastic, in the form of an acoustic signal or in the form of tactile feedback such as vibration. Such feedback may be a reminder or an alert to eat a meal or take medication or a supplement such as a vitamin, to engage in an activity such as exercise or meditation, or to drink water when a state of dehydration is detected. Additionally, a reminder or alert can be issued in the event that a particular physiological parameter such as ovulation has been detected, a level of calories burned during a workout has been achieved or a high heart rate or respiration rate has been encountered.

As will be apparent to those of skill in the art, it may be possible to "download" data from central monitoring unit **30** to sensor device **10**. The flow of data in such a download process would be substantially the reverse of that described above with respect to the upload of data from sensor device **10**. Thus, it is possible that the firmware of microprocessor **20** of sensor device **10** can be updated or altered remotely, i.e., the microprocessor can be reprogrammed, by downloading new firmware to sensor device **10** from central monitoring unit **30** for such parameters as timing and sample rates of sensor device **10**. Also, the reminders/alerts provided by sensor device **10** may be set by the user using the web site maintained by central monitoring unit **30** and subsequently downloaded to the sensor device **10**.

Referring to FIG. **3**, a block diagram of an embodiment of central monitoring unit **30** is shown. Central monitoring unit **30** includes CSU/DSU **70** which is connected to router **75**, the main function of which is to take data requests or traffic, both incoming and outgoing, and direct such requests and traffic for processing or viewing on the web site maintained by central monitoring unit **30**. Connected to router **75** is firewall **80**. The main purpose of firewall **80** is to protect the remainder of central monitoring unit **30** from unauthorized or malicious intrusions. Switch **85**, connected to firewall **80**, is used to direct data flow between middleware servers **95***a* through **95***c* and database server **110**. Load balancer **90** is provided to spread the workload of incoming requests among the identically configured middleware servers **95***a* through **95***c*. Load balancer **90**, a suitable example of which is the F5 ServerIron product sold by Foundry Networks, Inc. of San Jose, Calif., analyzes the availability of each middleware server **95***a* through **95***c*, and the amount of system resources being used in each middleware server **95***a* through **95***c*, in order to spread tasks among them appropriately.

Central monitoring unit **30** includes network storage device **100**, such as a storage area network or SAN, which acts as the central repository for data. In particular, network storage device **100** comprises a database that stores all data gathered for each individual user in the manners described above. An example of a suitable network storage device **100** is the Symmetrix product sold by EMC Corporation of Hopkinton, Mass. Although only one network storage device **100** is shown in FIG. **3**, it will be understood that multiple network storage devices of various capacities could be used depending on the data storage needs of central monitoring unit **30**. Central monitoring unit **30** also includes database server **110** which is coupled to network storage device **100**. Database server **110** is made up of two main components: a large scale multiprocessor server and an enterprise type software server component such as the 8/8i component sold by Oracle Corporation of Redwood City, Calif., or the 506 7 component

sold by Microsoft Corporation of Redmond, Wash. The primary functions of database server **110** are that of providing access upon request to the data stored in network storage device **100**, and populating network storage device **100** with new data. Coupled to network storage device **100** is controller **115**, which typically comprises a desktop personal computer, for managing the data stored in network storage device **100**.

Middleware servers **95***a* through **95***c*, a suitable example of which is the 22OR Dual Processor sold by Sun Microsystems, Inc. of Palo Alto, Calif., each contain software for generating and maintaining the corporate or home web page or pages of the web site maintained by central monitoring unit **30**. As is known in the art, a web page refers to a block or blocks of data available on the World-Wide Web comprising a file or files written in Hypertext Markup Language or HTML, and a web site commonly refers to any computer on the Internet running a World-Wide Web server process. The corporate or home web page or pages are the opening or landing web page or pages that are accessible by all members of the general public that visit the site by using the appropriate uniform resource locator or URL. As is known in the art, URLs are the form of address used on the World-Wide Web and provide a standard way of specifying the location of an object, typically a web page, on the Internet. Middleware servers **95***a* through **95***c* also each contain software for generating and maintaining the web pages of the web site of central monitoring unit **30** that can only be accessed by individuals that register and become members of central monitoring unit **30**. The member users will be those individuals who wish to have their data stored at central monitoring unit **30**. Access by such member users is controlled using passwords for security purposes. Preferred embodiments of those web pages are described in detail below and are generated using collected data that is stored in the database of network storage device **100**.

Middleware servers **95***a* through **95***c* also contain software for requesting data from and writing data to network storage device **100** through database server **110**. When an individual user desires to initiate a session with the central monitoring unit **30** for the purpose of entering data into the database of network storage device **100**, viewing his or her data stored in the database of network storage device **100**, or both, the user visits the home web page of central monitoring unit **30** using a browser program such as Internet Explorer distributed by Microsoft Corporation of Redmond, Wash., and logs in as a registered user. Load balancer **90** assigns the user to one of the middleware servers **95***a* through **95***c*, identified as the chosen middleware server. A user will preferably be assigned to a chosen middleware server for each entire session. The chosen middleware server authenticates the user using any one of many well known methods, to ensure that only the true user is permitted to access the information in the database. A member user may also grant access to his or her data to a third party such as a health care provider or a personal trainer. Each authorized third party may be given a separate password and may view the member user's data using a conventional browser. It is therefore possible for both the user and the third party to be the recipient of the data.

When the user is authenticated, the chosen middleware server requests, through database server **110**, the individual user's data from network storage device **100** for a predetermined time period. The predetermined time period is preferably thirty days. The requested data, once received from network storage device **100**, is temporarily stored by the chosen middleware server in cache memory. The cached data is used by the chosen middleware server as the basis for presenting information, in the form of web pages, to the user again through the user's browser. Each middleware server **95***a* through **95***c* is provided with appropriate software for generating such web pages, including software for manipulating and performing calculations utilizing the data to put the data in appropriate format for presentation to the user. Once the user ends his or her session, the data is discarded from cache. When the user initiates a new session, the process for obtaining and caching data for that user as described above is repeated. This caching system thus ideally requires that only one call to the network storage device **100** be made per session, thereby reducing the traffic that database server **110** must handle. Should a request from a user during a particular session require data that is outside of a predetermined time period of cached data already retrieved, a separate call to network storage device **100** may be performed by the chosen middleware server. The predetermined time period should be chosen, however, such that such additional calls are minimized. Cached data may also be saved in cache memory so that it can be reused when a user starts a new session, thus eliminating the need to initiate a new call to network storage device **100**.

As described in connection with Table 2, the microprocessor of sensor device **10** may be programmed to derive information relating to an individual's physiological state based on the data indicative of one or more physiological parameters. Central monitoring unit **30**, and preferably middleware servers **95***a* through **95***c*, may also be similarly programmed to derive such information based on the data indicative of one or more physiological parameters.

It is also contemplated that a user will input additional data during a session, for example, information relating to the user's eating or sleeping habits. This additional data is preferably stored by the chosen middleware server in a cache during the duration of the user's session. When the user ends the session, this additional new data stored in a cache is transferred by the chosen middleware server to database server **110** for population in network storage device **100**. Alternatively, in addition to being stored in a cache for potential use during a session, the input data may also be immediately transferred to database server **110** for population in network storage device **100**, as part of a write-through cache system which is well known in the art.

Data collected by sensor device **10** shown in FIG. **1** is periodically uploaded to central monitoring unit **30**. Either by long distance wireless transmission or through personal computer **35**, a connection to central monitoring unit **30** is made through an electronic network, preferably the Internet. In particular, connection is made to load balancer **90** through CSU/DSU **70**, router **75**, firewall **80** and switch **85**. Load balancer **90** then chooses one of the middleware servers **95***a* through **95***c* to handle the upload of data, hereafter called the chosen middleware server. The chosen middleware server authenticates the user using any one of many well known methods. If authentication is successful, the data is uploaded to the chosen middleware server as described above, and is ultimately transferred to database server **110** for population in the network storage device **100**.

Referring to FIG. **4**, an alternate embodiment of central monitoring unit **30** is shown. In addition to the elements shown and described with respect to FIG. **3**, the embodiment of the central monitoring unit **30** shown in FIG. **4** includes a mirror network storage device **120** which is a redundant backup of network storage device **100**. Coupled to mirror network storage device **120** is controller **122**. Data from network storage device **100** is periodically copied to mirror network storage device **120** for data redundancy purposes.

Third parties such as insurance companies or research institutions may be given access, possibly for a fee, to certain

of the information stored in mirror network storage device **120**. Preferably, in order to maintain the confidentiality of the individual users who supply data to central monitoring unit **30**, these third parties are not given access to such user's individual database records, but rather are only given access to the data stored in mirror network storage device **120** in aggregate form. Such third parties may be able to access the information stored in mirror network storage device **120** through the Internet using a conventional browser program. Requests from third parties may come in through CSU/DSU **70**, router **75**, firewall **80** and switch **85**. In the embodiment shown in FIG. **4**, a separate load balancer **130** is provided for spreading tasks relating to the accessing and presentation of data from mirror drive array **120** among identically configured middleware servers **135***a* through **135***c*. Middleware servers **135***a* through **135***c* each contain software for enabling the third parties to, using a browser, formulate queries for information from mirror network storage device **120** through separate database server **125**. Middleware servers **135***a* through **135***c* also contain software for presenting the information obtained from mirror network storage device **120** to the third parties over the Internet in the form of web pages. In addition, the third parties can choose from a series of prepared reports that have information packaged along subject matter lines, such as various demographic categories.

As will be apparent to one of skill in the art, instead of giving these third parties access to the backup data stored in mirror network storage device **120**, the third parties may be given access to the data stored in network storage device **100**. Also, instead of providing load balancer **130** and middleware servers **135***a* through **135***c*, the same functionality, although at a sacrificed level of performance, could be provided by load balancer **90** and middleware servers **95***a* through **95***c*.

When an individual user first becomes a registered user or member, that user completes a detailed survey. The purposes of the survey are to: identify unique characteristics/circumstances for each user that they might need to address in order to maximize the likelihood that they will implement and maintain a healthy lifestyle as suggested by central monitoring unit **30**; gather baseline data which will be used to set initial goals for the individual user and facilitate the calculation and display of certain graphical data output such as the Health Index pistons; identify unique user characteristics and circumstances that will help central monitoring unit **30** customize the type of content provided to the user in the Health Manager's Daily Dose; and identify unique user characteristics and circumstances that the Health Manager can guide the user to address as possible barriers to a healthy lifestyle through the problem-solving function of the Health Manager.

The specific information to be surveyed may include: key individual temperamental characteristics, including activity level, regularity of eating, sleeping, and bowel habits, initial response to situations, adaptability, persistence, threshold of responsiveness, intensity of reaction, and quality of mood; the user's level of independent functioning, i.e., self-organization and management, socialization, memory, and academic achievement skills; the user's ability to focus and sustain attention, including the user's level of arousal, cognitive tempo, ability to filter distractions, vigilance, and self-monitoring; the user's current health status including current weight, height, and blood pressure, most recent general physician visit, gynecological exam, and other applicable physician/healthcare contacts, current medications and supplements, allergies, and a review of current symptoms and/or health-related behaviors; the user's past health history, i.e., illnesses/surgeries, family history, and social stress events, such as divorce or loss of a job, that have required adjustment by the individual; the user's beliefs, values and opinions about health priorities, their ability to alter their behavior and, what might contribute to stress in their life, and how they manage it; the user's degree of self-awareness, empathy, empowerment, and self-esteem, and the user's current daily routines for eating, sleeping, exercise, relaxation and completing activities of daily living; and the user's perception of the temperamental characteristics of two key persons in their life, for example, their spouse, a friend, a co-worker, or their boss, and whether there are clashes present in their relationships that might interfere with a healthy lifestyle or contribute to stress.

Each member user will have access, through the home web page of central monitoring unit **30**, to a series of web pages customized for that user, referred to as the Health Manager. The opening Health Manager web page **150** is shown in FIG. **5**. The Health Manager web pages are the main workspace area for the member user. The Health Manager web pages comprise a utility through which central monitoring unit **30** provides various types and forms of data, commonly referred to as analytical status data, to the user that is generated from the data it collects or generates, namely one or more of: the data indicative of various physiological parameters generated by sensor device **10**; the data derived from the data indicative of various physiological parameters; the data indicative of various contextual parameters generated by sensor device **10**; and the data input by the user. Analytical status data is characterized by the application of certain utilities or algorithms to convert one or more of the data indicative of various physiological parameters generated by sensor device **10**, the data derived from the data indicative of various physiological parameters, the data indicative of various contextual parameters generated by sensor device **10**, and the data input by the user into calculated health, wellness and lifestyle indicators. For example, based on data input by the user relating to the foods he or she has eaten, things such as calories and amounts of proteins, fats, carbohydrates, and certain vitamins can be calculated. As another example, skin temperature, heart rate, respiration rate, heat flow and/or GSR can be used to provide an indicator to the user of his or her stress level over a desired time period. As still another example, skin temperature, heat flow, beat-to-beat heart variability, heart rate, pulse rate, respiration rate, core temperature, galvanic skin response, EMG, EEG, EOG, blood pressure, oxygen consumption, ambient sound and body movement or motion as detected by a device such as an accelerometer can be used to provide indicators to the user of his or her sleep patterns over a desired time period.

Located on the opening Health Manager web page **150** is Health Index **155**. Health Index **155** is a graphical utility used to measure and provide feedback to member users regarding their performance and the degree to which they have succeeded in reaching a healthy daily routine suggested by central monitoring unit **30**. Health Index **155** thus provides an indication for the member user to track his or her progress. Health Index **155** includes six categories relating to the user's health and lifestyle: Nutrition, Activity Level, Mind Centering, Sleep, Daily Activities and How You Feel. The Nutrition category relates to what, when and how much a person eats and drinks. The Activity Level category relates to how much a person moves around. The Mind Centering category relates to the quality and quantity of time a person spends engaging in some activity that allows the body to achieve a state of profound relaxation while the mind becomes highly alert and focused. The Sleep category relates to the quality and quantity of a person's sleep. The Daily Activities category relates to the daily responsibilities and health risks people encounter. Finally, the How You Feel category relates to the general

perception that a person has about how they feel on a particular day. Each category has an associated level indicator or piston that indicates, preferably on a scale ranging from poor to excellent, how the user is performing with respect to that category.

When each member user completes the initial survey described above, a profile is generated that provides the user with a summary of his or her relevant characteristics and life circumstances. A plan and/or set of goals is provided in the form of a suggested healthy daily routine. The suggested healthy daily routine may include any combination of specific suggestions for incorporating proper nutrition, exercise, mind centering, sleep, and selected activities of daily living in the user's life. Prototype schedules may be offered as guides for how these suggested activities can be incorporated into the user's life. The user may periodically retake the survey, and based on the results, the items discussed above will be adjusted accordingly.

The Nutrition category is calculated from both data input by the user and sensed by sensor device **10**. The data input by the user comprises the time and duration of breakfast, lunch, dinner and any snacks, and the foods eaten, the supplements such as vitamins that are taken, and the water and other liquids consumed during a relevant, pre-selected time period. Based upon this data and on stored data relating to known properties of various foods, central monitoring unit **30** calculates well known nutritional food values such as calories and amounts of proteins, fats, carbohydrates, vitamins, etc., consumed.

The Nutrition Health Index piston level is preferably determined with respect to the following suggested healthy daily routine: eat at least three meals; eat a varied diet consisting of 6-11 servings of bread, pasta, cereal, and rice, 2-4 servings fruit, 3-5 servings of vegetables, 2-3 servings of fish, meat, poultry, dry beans, eggs, and nuts, and 2-3 servings of milk, yogurt and cheese; and drink 8 or more 8 ounce glasses of water. This routine may be adjusted based on information about the user, such as sex, age, height and/or weight. Certain nutritional targets may also be set by the user or for the user, relating to daily calories, protein, fiber, fat, carbohydrates, and/or water consumption and percentages of total consumption. Parameters utilized in the calculation of the relevant piston level include the number of meals per day, the number of glasses of water, and the types and amounts of food eaten each day as input by the user.

Nutritional information is presented to the user through nutrition web page **160** as shown in FIG. **6**. The preferred nutritional web page **160** includes nutritional fact charts **165** and **170** which illustrate actual and target nutritional facts, respectively as pie charts, and nutritional intake charts **175** and **180** which show total actual nutritional intake and target nutritional intake, respectively as pie charts. Nutritional fact charts **165** and **170** preferably show a percentage breakdown of items such as carbohydrates, protein and fat, and nutritional intake charts **175** and **180** are preferably broken down to show components such as total and target calories, fat, carbohydrates, protein, and vitamins. Web page **160** also includes meal and water consumption tracking **185** with time entries, hyperlinks **190** which allow the user to directly access nutrition-related news items and articles, suggestions for refining or improving daily routine with respect to nutrition and affiliate advertising elsewhere on the network, and calendar **195** for choosing between views having variable and selectable time periods. The items shown at **190** may be selected and customized based on information learned about the individual in the survey and on their performance as measured by the Health Index.

The Activity Level category of Health Index **155** is designed to help users monitor how and when they move around during the day and utilizes both data input by the user and data sensed by sensor device **10**. The data input by the user may include details regarding the user's daily activities, for example the fact that the user worked at a desk from 8 a.m. to 5 p.m. and then took an aerobics class from 6 p.m. to 7 p.m. Relevant data sensed by sensor device **10** may include heart rate, movement as sensed by a device such as an accelerometer, heat flow, respiration rate, calories burned, GSR and hydration level, which may be derived by sensor device **60** or central monitoring unit **30**. Calories burned may be calculated in a variety of manners, including: the multiplication of the type of exercise input by the user by the duration of exercise input by the user; sensed motion multiplied by time of motion multiplied by a filter constant; or sensed heat flux multiplied by time multiplied by a filter constant.

The Activity Level Health Index piston level is preferably determined with respect to a suggested healthy daily routine that includes: exercising aerobically for a pre-set time period, preferably 20 minutes, or engaging in a vigorous lifestyle activity for a pre-set time period, preferably one hour, and burning at least a minimum target number of calories, preferably 205 calories, through the aerobic exercise and/or lifestyle activity. The minimum target number of calories may be set according to information about the user, such as sex, age, height and/or weight. Parameters utilized in the calculation of the relevant piston level include the amount of time spent exercising aerobically or engaging in a vigorous lifestyle activity as input by the user and/or sensed by sensor device **10**, and the number of calories burned above pre-calculated energy expenditure parameters.

Information regarding the individual user's movement is presented to the user through activity level web page **200** shown in FIG. **7**, which may include activity graph **205** in the form of a bar graph, for monitoring the individual user's activities in one of three categories: high, medium and low intensity with respect to a pre-selected unit of time. Activity percentage chart **210**, in the form or a pie chart, may also be provided for showing the percentage of a pre-selected time period, such as one day, that the user spent in each category. Activity level web page **200** may also include calorie section **215** for displaying items such as total calories burned, daily target calories burned, total caloric intake, and duration of aerobic activity. Finally, activity level web page **200** may include at least one hyperlink **220** to allow a user to directly access relevant news items and articles, suggestions for refining or improving daily routine with respect to activity level and affiliate advertising elsewhere on the network. Activity level web page **200** may be viewed in a variety of formats, and may include user-selectable graphs and charts such as a bar graph, pie chart, or both, as selectable by Activity level check boxes **225**. Activity level calendar **230** is provided for selecting among views having variable and selectable time periods. The items shown at **220** may be selected and customized based on information learned about the individual in the survey and on their performance as measured by the Health Index.

The Mind Centering category of Health Index **155** is designed to help users monitor the parameters relating to time spent engaging in certain activities which allow the body to achieve a state of profound relaxation while the mind becomes focused, and is based upon both data input by the user and data sensed by the sensor device **10**. In particular, a user may input the beginning and end times of relaxation activities such as yoga or meditation. The quality of those activities as determined by the depth of a mind centering

event can be measured by monitoring parameters including skin temperature, heart rate, respiration rate, and heat flow as sensed by sensor device **10**. Percent change in GSR as derived either by sensor device **10** or central monitoring unit **30** may also be utilized.

The Mind Centering Health Index piston level is preferably calculated with respect to a suggested healthy daily routine that includes participating each day in an activity that allows the body to achieve profound relaxation while the mind stays highly focused for at least fifteen minutes. Parameters utilized in the calculation of the relevant piston level include the amount of time spent in a mind centering activity, and the percent change in skin temperature, heart rate, respiration rate, heat flow or GSR as sensed by sensor device **10** compared to a baseline which is an indication of the depth or quality of the mind centering activity.

Information regarding the time spent on self-reflection and relaxation is presented to the user through mind centering web page **250** shown in FIG. **8**. For each mind centering activity, referred to as a session, the preferred mind centering web page **250** includes the time spent during the session, shown at **255**, the target time, shown at **260**, comparison section **265** showing target and actual depth of mind centering, or focus, and a histogram **270** that shows the overall level of stress derived from such things as skin temperature, heart rate, respiration rate, heat flow and/or GSR. In comparison section **265**, the human figure outline showing target focus is solid, and the human figure outline showing actual focus ranges from fuzzy to solid depending on the level of focus. The preferred mind centering web page may also include an indication of the total time spent on mind centering activities, shown at **275**, hyperlinks **280** which allow the user to directly access relevant news items and articles, suggestions for refining or improving daily routine with respect to mind centering and affiliate advertising, and a calendar **285** for choosing among views having variable and selectable time periods. The items shown at **280** may be selected and customized based on information learned about the individual in the survey and on their performance as measured by the Health Index.

The Sleep category of Health Index **155** is designed to help users monitor their sleep patterns and the quality of their sleep. It is intended to help users learn about the importance of sleep in their healthy lifestyle and the relationship of sleep to circadian rhythms, being the normal daily variations in body functions. The Sleep category is based upon both data input by the user and data sensed by sensor device **10**. The data input by the user for each relevant time interval includes the times the user went to sleep and woke up and a rating of the quality of sleep. As noted in Table 2, the data from sensor device **10** that is relevant includes skin temperature, heat flow, beat-to-beat heart variability, heart rate, pulse rate, respiration rate, core temperature, galvanic skin response, EMG, EEG, EOG, blood pressure, and oxygen consumption. Also relevant is ambient sound and body movement or motion as detected by a device such as an accelerometer. This data can then be used to calculate or derive sleep onset and wake time, sleep interruptions, and the quality and depth of sleep.

The Sleep Health Index piston level is determined with respect to a healthy daily routine including getting a minimum amount, preferably eight hours, of sleep each night and having a predictable bed time and wake time. The specific parameters which determine the piston level calculation include the number of hours of sleep per night and the bed time and wake time as sensed by sensor device **10** or as input by the user, and the quality of the sleep as rated by the user or derived from other data.

Information regarding sleep is presented to the user through sleep web page **290** shown in FIG. **9**. Sleep web page **290** includes a sleep duration indicator **295**, based on either data from sensor device **10** or on data input by the user, together with user sleep time indicator **300** and wake time indicator **305**. A quality of sleep rating **310** input by the user may also be utilized and displayed. If more than a one day time interval is being displayed on sleep web page **290**, then sleep duration indicator **295** is calculated and displayed as a cumulative value, and sleep time indicator **300**, wake time indicator **305** and quality of sleep rating **310** are calculated and illustrated as averages. Sleep web page **290** also includes a user-selectable sleep graph **315** which calculates and displays one sleep related parameter over a pre-selected time interval. For illustrative purposes, FIG. **9** shows heat flow over a one-day period, which tends to be lower during sleeping hours and higher during waking hours. From this information, a person's bio-rhythms can be derived. Sleep graph **315** may also include a graphical representation of data from an accelerometer incorporated in sensor device **10** which monitors the movement of the body. The sleep web page **290** may also include hyperlinks **320** which allow the user to directly access sleep related news items and articles, suggestions for refining or improving daily routine with respect to sleep and affiliate advertising available elsewhere on the network, and a sleep calendar **325** for choosing a relevant time interval. The items shown at **320** may be selected and customized based on information learned about the individual in the survey and on their performance as measured by the Health Index.

The Activities of Daily Living category of Health Index **155** is designed to help users monitor certain health and safety related activities and risks and is based entirely on data input by the user. The Activities of Daily Living category is divided into four sub-categories: personal hygiene, which allows the user to monitor activities such as brushing and flossing his or her teeth and showering; health maintenance, that tracks whether the user is taking prescribed medication or supplements and allows the user to monitor tobacco and alcohol consumption and automobile safety such as seat belt use; personal time, that allows the user to monitor time spent socially with family and friends, leisure, and mind centering activities; and responsibilities, that allows the user to monitor certain work and financial activities such as paying bills and household chores.

The Activities of Daily Living Health Index piston level is preferably determined with respect to the healthy daily routine described below. With respect to personal hygiene, the routine requires that the users shower or bathe each day, brush and floss teeth each day, and maintain regular bowel habits. With respect to health maintenance, the routine requires that the user take medications and vitamins and/or supplements, use a seat belt, refrain from smoking, drink moderately, and monitor health each day with the Health Manager. With respect to personal time, the routine requires the users to spend at least one hour of quality time each day with family and/or friends, restrict work time to a maximum of nine hours a day, spend some time on a leisure or play activity each day, and engage in a mind stimulating activity. With respect to responsibilities, the routine requires the users to do household chores, pay bills, be on time for work, and keep appointments. The piston level is calculated based on the degree to which the user completes a list of daily activities as determined by information input by the user.

Information relating to these activities is presented to the user through daily activities web page **330** shown in FIG. **10**. In preferred daily activities web page **330**, activities chart

335, selectable for one or more of the sub-categories, shows whether the user has done what is required by the daily routine. A colored or shaded box indicates that the user has done the required activity, and an empty, non-colored or shaded box indicates that the user has not done the activity. Activities chart **335** can be created and viewed in selectable time intervals. For illustrative purposes, FIG. **10** shows the personal hygiene and personal time sub-categories for a particular week. In addition, daily activities web page **330** may include daily activity hyperlinks **340** which allow the user to directly access relevant news items and articles, suggestions for improving or refining daily routine with respect to activities of daily living and affiliate advertising, and a daily activities calendar **345** for selecting a relevant time interval. The items shown at **340** may be selected and customized based on information learned about the individual in the survey and on their performance as measured by the Health Index.

The How You Feel category of Health Index **155** is designed to allow users to monitor their perception of how they felt on a particular day, and is based on information, essentially a subjective rating, that is input directly by the user. A user provides a rating, preferably on a scale of 1 to 5, with respect to the following nine subject areas: mental sharpness; emotional and psychological well being; energy level; ability to cope with life stresses; appearance; physical well being; self-control; motivation; and comfort in relating to others. Those ratings are averaged and used to calculate the relevant piston level.

Referring to FIG. **11**, Health Index web page **350** is shown. Health Index web page **350** enables users to view the performance of their Health Index over a user selectable time interval including any number of consecutive or non-consecutive days. Using Health Index selector buttons **360**, the user can select to view the Health Index piston levels for one category, or can view a side-by-side comparison of the Health Index piston levels for two or more categories. For example, a user might want to just turn on Sleep to see if their overall sleep rating improved over the previous month, much in the same way they view the performance of their favorite stock. Alternatively, Sleep and Activity Level might be simultaneously displayed in order to compare and evaluate Sleep ratings with corresponding Activity Level ratings to determine if any day-to-day correlations exist. Nutrition ratings might be displayed with How You Feel for a pre-selected time interval to determine if any correlation exists between daily eating habits and how they felt during that interval. For illustrative purposes, FIG. **11** illustrates a comparison of Sleep and Activity Level piston levels for the week of June 10 through June 16. Health Index web page **350** also includes tracking calculator **365** that displays access information and statistics such as the total number of days the user has logged in and used the Health Manager, the percentage of days the user has used the Health Manager since becoming a subscriber, and percentage of time the user has used the sensor device **10** to gather data.

Referring again to FIG. **5**, opening Health Manager web page **150** may include a plurality of user selectable category summaries **156***a* through **156***f*, one corresponding to each of the Health Index **155** categories. Each category summary **156***a* through **156***f* presents a pre-selected filtered subset of the data associated with the corresponding category. Nutrition category summary **156***a* displays daily target and actual caloric intake. Activity Level category summary **156***b* displays daily target and actual calories burned. Mind Centering category summary **156***c* displays target and actual depth of mind centering or focus. Sleep category summary **156***d* displays target sleep, actual sleep, and a sleep quality rating. Daily Activities category summary **156***e* displays a target and actual score based on the percentage of suggested daily activities that are completed. The How You Feel category summary **156***f* shows a target and actual rating for the day.

Opening Health Manager web page **150** also may include Daily Dose section **157** which provides, on a daily time interval basis, information to the user, including, but not limited to, hyperlinks to news items and articles, commentary and reminders to the user based on tendencies, such as poor nutritional habits, determined from the initial survey. The commentary for Daily Dose **157** may, for example, be a factual statement that drinking **8** glasses of water a day can reduce the risk of colon cancer by as much as 32%, accompanied by a suggestion to keep a cup of water by your computer or on your desk at work and refill often. Opening Health Manager web page **150** also may include a Problem Solver section **158** that actively evaluates the user's performance in each of the categories of Health Index **155** and presents suggestions for improvement. For example, if the system detects that a user's Sleep levels have been low, which suggest that the user has been having trouble sleeping, Problem Solver **158** can provide suggestions for way to improve sleep. Problem Solver **158** also may include the capability of user questions regarding improvements in performance. Opening Health Manager web page **150** may also include a Daily Data section **159** that launches an input dialog box. The input dialog box facilitates input by the user of the various data required by the Health Manager. As is known in the art, data entry may be in the form of selection from pre-defined lists or general free form text input. Finally, opening Health Manager web page **150** may include Body Stats section **161** which may provide information regarding the user's height, weight, body measurements, body mass index or BMI, and vital signs such as heart rate, blood pressure or any of the identified physiological parameters.

Referring to FIGS. **12-17**, a specific embodiment of sensor device **10** is shown which is in the form of an armband adapted to be worn by an individual on his or her upper arm, between the shoulder and the elbow. The specific embodiment of sensor device **10** shown in FIGS. **12-17** will, for convenience, be referred to as armband sensor device **400**. Armband sensor device **400** includes computer housing **405**, flexible wing body **410**, and, as shown in FIG. **17**, elastic strap **415**. Computer housing **405** and flexible wing body **410** are preferably made of a flexible urethane material or an elastomeric material such as rubber or a rubber-silicone blend by a molding process. Flexible wing body **410** includes first and second wings **418** each having a thru-hole **420** located near the ends **425** thereof. First and second wings **418** are adapted to wrap around a portion of the wearer's upper arm.

Elastic strap **415** is used to removably affix armband sensor device **400** to the individual's upper arm. As seen in FIG. **17**, bottom surface **426** of elastic strap **415** is provided with Velcro loops **416** along a portion thereof. Each end **427** of elastic strap **415** is provided with Velcro hook patch **428** on bottom surface **426** and pull tab **429** on top surface **430**. A portion of each pull tab **429** extends beyond the edge of each end **427**.

In order to wear armband sensor device **400**, a user inserts each end **427** of elastic strap **415** into a respective thru-hole **420** of flexible wing body **410**. The user then places his arm through the loop created by elastic strap **415**, flexible wing body **410** and computer housing **405**. By pulling each pull tab **429** and engaging Velcro hook patches **428** with Velcro loops **416** at a desired position along bottom surface **426** of elastic strap **415**, the user can adjust elastic strap **415** to fit comfortably. Since Velcro hook patches **428** can be engaged with Velcro loops **416** at almost any position along bottom surface

426, armband sensor device 400 can be adjusted to fit arms of various sizes. Also, elastic strap 415 may be provided in various lengths to accommodate a wider range of arm sizes. As will be apparent to one of skill in the art, other means of fastening and adjusting the size of elastic strap may be used, including, but not limited to, snaps, buttons, or buckles. It is also possible to use two elastic straps that fasten by one of several conventional means including Velcro, snaps, buttons, buckles or the like, or merely a single elastic strap affixed to wings 418.

Alternatively, instead of providing thru-holes 420 in wings 418, loops having the shape of the letter D, not shown, may be attached to ends 425 of wings 418 by one of several conventional means. For example, a pin, not shown, may be inserted through ends 425, wherein the pin engages each end of each loop. In this configuration, the D-shaped loops would serve as connecting points for elastic strap 415, effectively creating a thru-hole between each end 425 of each wing 418 and each loop.

As shown in FIG. 18, which is an exploded view of armband sensor device 400, computer housing 405 includes a top portion 435 and a bottom portion 440. Contained within computer housing 405 are printed circuit board or PCB 445, rechargeable battery 450, preferably a lithium ion battery, and vibrating motor 455 for providing tactile feedback to the wearer, such as those used in pagers, suitable examples of which are the Model 12342 and 12343 motors sold by MG Motors Ltd. of the United Kingdom.

Top portion 435 and bottom portion 440 of computer housing 405 sealingly mate along groove 436 into which O-ring 437 is fit, and may be affixed to one another by screws, not shown, which pass through screw holes 438*a* and stiffeners 438*b* of bottom portion 440 and apertures 439 in PCB 445 and into threaded receiving stiffeners 451 of top portion 435. Alternately, top portion 435 and bottom portion 440 may be snap fit together or affixed to one another with an adhesive. Preferably, the assembled computer housing 405 is sufficiently water resistant to permit armband sensor device 400 to be worn while swimming without adversely affecting the performance thereof.

As can be seen in FIG. 13, bottom portion 440 includes, on a bottom side thereof, a raised platform 430. Affixed to raised platform 430 is heat flow or flux sensor 460, a suitable example of which is the micro-foil heat flux sensor sold by RdF Corporation of Hudson, N.H. Heat flux sensor 460 functions as a self-generating thermopile transducer, and preferably includes a carrier made of a polyamide film. Bottom portion 440 may include on a top side thereof, that is on a side opposite the side to which heat flux sensor 460 is affixed, a heat sink, not shown, made of a suitable metallic material such as aluminum. Also affixed to raised platform 430 are GSR sensors 465, preferably comprising electrodes formed of a material such as conductive carbonized rubber, gold or stainless steel. Although two GSR sensors 465 are shown in FIG. 13, it will be appreciated by one of skill in the art that the number of GSR sensors 465 and the placement thereof on raised platform 430 can vary as long as the individual GSR sensors 465, i.e., the electrodes, are electrically isolated from one another. By being affixed to raised platform 430, heat flux sensor 460 and GSR sensors 465 are adapted to be in contact with the wearer's skin when armband sensor device 400 is worn. Bottom portion 440 of computer housing 405 may also be provided with a removable and replaceable soft foam fabric pad, not shown, on a portion of the surface thereof that does not include raised platform 430 and screw holes 438*a*. The soft foam fabric is intended to contact the wearer's skin and make armband sensor device 400 more comfortable to wear.

Electrical coupling between heat flux sensor 460, GSR sensors 465, and PCB 445 may be accomplished in one of various known methods. For example, suitable wiring, not shown, may be molded into bottom portion 440 of computer housing 405 and then electrically connected, such as by soldering, to appropriate input locations on PCB 445 and to heat flux sensor 460 and GSR sensors 465. Alternatively, rather than molding wiring into bottom portion 440, thru-holes may be provided in bottom portion 440 through which appropriate wiring may pass. The thru-holes would preferably be provided with a water tight seal to maintain the integrity of computer housing 405.

Rather than being affixed to raised platform 430 as shown in FIG. 13, one or both of heat flux sensor 460 and GSR sensors 465 may be affixed to the inner portion 466 of flexible wing body 410 on either or both of wings 418 so as to be in contact with the wearer's skin when armband sensor device 400 is worn. In such a configuration, electrical coupling between heat flux sensor 460 and GSR sensors 465, whichever the case may be, and the PCB 445 may be accomplished through suitable wiring, not shown, molded into flexible wing body 410 that passes through one or more thru-holes in computer housing 405 and that is electrically connected, such as by soldering, to appropriate input locations on PCB 445. Again, the thru-holes would preferably be provided with a water tight seal to maintain the integrity of computer housing 405. Alternatively, rather than providing thru-holes in computer housing 405 through which the wiring passes, the wiring may be captured in computer housing 405 during an overmolding process, described below, and ultimately soldered to appropriate input locations on PCB 445.

As shown in FIGS. 12, 16, 17 and 18, computer housing 405 includes a button 470 that is coupled to and adapted to activate a momentary switch 585 on PCB 445. Button 470 may be used to activate armband sensor device 400 for use, to mark the time an event occurred or to request system status information such as battery level and memory capacity. When button 470 is depressed, momentary switch 585 closes a circuit and a signal is sent to processing unit 490 on PCB 445. Depending on the time interval for which button 470 is depressed, the generated signal triggers one of the events just described. Computer housing 405 also includes LEDs 475, which may be used to indicate battery level or memory capacity or to provide visual feedback to the wearer. Rather than LEDs 475, computer housing 405 may also include a liquid crystal display or LCD to provide battery level, memory capacity or visual feedback information to the wearer. Battery level, memory capacity or feedback information may also be given to the user tactily or audibly.

Armband sensor device 400 may be adapted to be activated for use, that is collecting data, when either of GSR sensors 465 or heat flux sensor 460 senses a particular condition that indicates that armband sensor device 400 has been placed in contact with the user's skin. Also, armband sensor device 400 may be adapted to be activated for use when one or more of heat flux sensor 460, GSR sensors 465, accelerometer 495 or 550, or any other device in communication with armband sensor device 400, alone or in combination, sense a particular condition or conditions that indicate that the armband sensor device 400 has been placed in contact with the user's skin for use. At other times, armband sensor device 400 would be deactivated, thus preserving battery power.

Computer housing 405 is adapted to be coupled to a battery recharger unit 480 shown in FIG. 19 for the purpose of

recharging rechargeable battery **450**. Computer housing **405** includes recharger contacts **485**, shown in FIGS. **12**, **15**, **16** and **17**, that are coupled to rechargeable battery **450**. Recharger contacts **485** may be made of a material such as brass, gold or stainless steel, and are adapted to mate with and be electrically coupled to electrical contacts, not shown, provided in battery recharger unit **480** when armband sensor device **400** is placed therein. The electrical contacts provided in battery recharger unit **480** may be coupled to recharging circuit **481***a* provided inside battery recharger unit **480**. In this configuration, recharging circuit **481** would be coupled to a wall outlet, such as by way of wiring including a suitable plug that is attached or is attachable to battery recharger unit **480**. Alternatively, electrical contacts **480** may be coupled to wiring that is attached to or is attachable to battery recharger unit **480** that in turn is coupled to recharging circuit **481***b* external to battery recharger unit **480**. The wiring in this configuration would also include a plug, not shown, adapted to be plugged into a conventional wall outlet.

Also provided inside battery recharger unit **480** is RF transceiver **483** adapted to receive signals from and transmit signals to RF transceiver **565** provided in computer housing **405** and shown in FIG. **20**. RF transceiver **483** is adapted to be coupled, for example by a suitable cable, to a serial port, such as an RS 232 port or a USB port, of a device such as personal computer **35** shown in FIG. **1**. Thus, data may be uploaded from and downloaded to armband sensor device **400** using RF transceiver **483** and RF transceiver **565**. It will be appreciated that although RF transceivers **483** and **565** are shown in FIGS. **19** and **20**, other forms of wireless transceivers may be used, such as infrared transceivers. Alternatively, computer housing **405** may be provided with additional electrical contacts, not shown, that would be adapted to mate with and be electrically coupled to additional electrical contacts, not shown, provided in battery recharger unit **480** when armband sensor device **400** is placed therein. The additional electrical contacts in the computer housing **405** would be coupled to the processing unit **490** and the additional electrical contacts provided in battery recharger unit **480** would be coupled to a suitable cable that in turn would be coupled to a serial port, such as an RS R32 port or a USB port, of a device such as personal computer **35**. This configuration thus provides an alternate method for uploading of data from and downloading of data to armband sensor device **400** using a physical connection.

FIG. **20** is a schematic diagram that shows the system architecture of armband sensor device **400**, and in particular each of the components that is either on or coupled to PCB **445**.

As shown in FIG. **17**, PCB **445** includes processing unit **490**, which may be a microprocessor, a microcontroller, or any other processing device that can be adapted to perform the functionality described herein. Processing unit **490** is adapted to provide all of the functionality described in connection with microprocessor **20** shown in FIG. **2**. A suitable example of processing unit **490** is the Dragonball EZ sold by Motorola, Inc. of Schaumburg, Ill. PCB **445** also has thereon a two-axis accelerometer **495**, a suitable example of which is the Model ADXL210 accelerometer sold by Analog Devices, Inc. of Norwood, Mass. Two-axis accelerometer **495** is preferably mounted on PCB **445** at an angle such that its sensing axes are offset at an angle substantially equal to 45 degrees from the longitudinal axis of PCB **445** and thus the longitudinal axis of the wearer's arm when armband sensor device **400** is worn. The longitudinal axis of the wearer's arm refers to the axis defined by a straight line drawn from the wearer's shoulder to the wearer's elbow. The output signals of two-axis accelerometer **495** are passed through buffers **500** and input into analog to digital converter **505** that in turn is coupled to processing unit **490**. GSR sensors **465** are coupled to amplifier **510** on PCB **445**. Amplifier **510** provides amplification and low pass filtering functionality, a suitable example of which is the Model AD8544 amplifier sold by Analog Devices, Inc. of Norwood, Mass. The amplified and filtered signal output by amplifier **510** is input into amp/offset **515** to provide further gain and to remove any bias voltage and into filter/conditioning circuit **520**, which in turn are each coupled to analog to digital converter **505**. Heat flux sensor **460** is coupled to differential input amplifier **525**, such as the Model INA amplifier sold by Burr-Brown Corporation of Tucson, Ariz., and the resulting amplified signal is passed through filter circuit **530**, buffer **535** and amplifier **540** before being input to analog to digital converter **505**. Amplifier **540** is configured to provide further gain and low pass filtering, a suitable example of which is the Model AD8544 amplifier sold by Analog Devices, Inc. of Norwood, Mass. PCB **445** also includes thereon a battery monitor **545** that monitors the remaining power level of rechargeable battery **450**. Battery monitor **545** preferably comprises a voltage divider with a low pass filter to provide average battery voltage. When a user depresses button **470** in the manner adapted for requesting battery level, processing unit **490** checks the output of battery monitor **545** and provides an indication thereof to the user, preferably through LEDs **475**, but also possibly through vibrating motor **455** or ringer **575**. An LCD may also be used.

PCB **445** may include three-axis accelerometer **550** instead of or in addition to two-axis accelerometer **495**. The three-axis accelerometer outputs a signal to processing unit **490**. A suitable example of three-axis accelerometer is the μPAM product sold by I.M. Systems, Inc. of Scottsdale, Ariz. Three-axis accelerometer **550** is preferably tilted in the manner described with respect to two-axis accelerometer **495**.

PCB **445** also includes RF receiver **555** that is coupled to processing unit **490**. RF receiver **555** may be used to receive signals that are output by another device capable of wireless transmission, shown in FIG. **20** as wireless device **558**, worn by or located near the individual wearing armband sensor device **400**. Located near as used herein means within the transmission range of wireless device **558**. For example, wireless device **558** may be a chest mounted heart rate monitor such as the Tempo product sold by Polar Electro of Oulu, Finland. Using such a heart rate monitor, data indicative of the wearer's heart rate can be collected by armband sensor device **400**. Antenna **560** and RF transceiver **565** are coupled to processing unit **490** and are provided for purposes of uploading data to central monitoring unit **30** and receiving data downloaded from central monitoring unit **30**. RF transceiver **565** and RF receiver **555** may, for example, employ Bluetooth technology as the wireless transmission protocol. Also, other forms of wireless transmission may be used, such as infrared transmission.

The fact that RF Transceiver **565** may be used for wirelessly uploading data from and wirelessly downloading data to armband sensor device **400** is advantageous because it eliminates the need to remove armband sensor device **400** to perform these functions, as would be required with a physical connection. For example, if armband sensor device **400** was being worn under the user's clothing, requiring removal of armband sensor device **400** prior to uploading and/or downloading data increases user inconvenience. In addition, the wearing of armband sensor device **400** has an effect on the user's skin and underlying blood vessels, which in turn may effect any measurements being made with respect thereto. It may be necessary for a period of time during which armband

sensor device **400** is worn by the user to elapse before a steady state is achieved and consistent, accurate measurements can be made. By providing armband sensor device **400** with wireless communications capability, data can be uploaded and downloaded without disturbing an established steady state equilibrium condition. For example, programming data for processing unit **490** that controls the sampling characteristics of armband sensor device **400** can be downloaded to armband sensor device **400** without disturbing the steady state equilibrium condition.

In addition, antenna **560** and RF transceiver **565** permit armband sensor device **400** to communicate wirelessly with other devices capable of wireless communication, i.e., transmit information to and receive information from those devices. The devices may include, for example, devices that are implanted in the body of the person using armband sensor device **400**, such as an implantable heart pacemaker or an implantable insulin dispensing device, for example the MiniMed® 2007 implantable insulin pump sold by MiniMed Inc. of Northridge, Calif., devices worn on the body of the person using armband sensor device **400**, or devices located near the person using armband sensor device **400** at any particular time, such as an electronic scale, a blood pressure monitor, a glucose monitor, a cholesterol monitor or another armband sensor device **400**. With this two-way wireless communication capability, armband sensor device **400** may be adapted to transmit information that activates or deactivates such a device for use or information that programs such a device to behave in a particular way. For example, armband sensor device **400** may be adapted to activate a piece of exercise equipment such as a treadmill and program it to operate with certain parameters that are dictated or desired by or optimal for the user of armband sensor device **400**. As another example, armband sensor device **400** may be adapted to adjust a computer controlled thermostat in a home based on the detected skin temperature of the wearer or turn off a computer controlled lighting system, television or stereo when the wearer is determined to have fallen asleep.

Vibrating motor **455** is coupled to processing unit **490** through vibrator driver **570** and provides tactile feedback to the wearer. Similarly, ringer **575**, a suitable example of which is the Model SMT916A ringer sold by Projects Unlimited, Inc. of Dayton, Ohio, is coupled to processing unit **490** through ringer driver **580**, a suitable example of which is the Model MMBTA14 CTI darlington transistor driver sold by Motorola, Inc. of Schaumburg, Ill., and provides audible feedback to the wearer. Feedback may include, for example, celebratory, cautionary and other threshold or event driven messages, such as when a wearer reaches a level of calories burned during a workout.

Also provided on PCB **445** and coupled to processing unit **490** is momentary switch **585**. Momentary switch **585** is also coupled to button **470** for activating momentary switch **585**. LEDs **475**, used to provide various types of feedback information to the wearer, are coupled to processing unit **490** through LED latch/driver **590**.

Oscillator **595** is provided on PCB **445** and supplies the system clock to processing unit **490**. Reset circuit **600**, accessible and triggerable through a pin-hole in the side of computer housing **405**, is coupled to processing unit **490** and enables processing unit **490** to be reset to a standard initial setting.

Rechargeable battery **450**, which is the main power source for the armband sensor device **400**, is coupled to processing unit **490** through voltage regulator **605**. Finally, memory functionality is provided for armband sensor device **400** by SRAM **610**, which stores data relating to the wearer of armband sensor device **400**, and flash memory **615**, which stores program and configuration data, provided on PCB **445**. SRAM **610** and flash memory **615** are coupled to processing unit **490** and each preferably have at least 512K of memory.

In manufacturing and assembling armband sensor device **400**, top portion **435** of computer housing **405** is preferably formed first, such as by a conventional molding process, and flexible wing body **410** is then overmolded on top of top portion **435**. That is, top portion **435** is placed into an appropriately shaped mold, i.e., one that, when top portion **435** is placed therein, has a remaining cavity shaped according to the desired shape of flexible wing body **410**, and flexible wing body **410** is molded on top of top portion **435**. As a result, flexible wing body **410** and top portion **435** will merge or bond together, forming a single unit. Alternatively, top portion **435** of computer housing **405** and flexible wing body **410** may be formed together, such as by molding in a single mold, to form a single unit. The single unit however formed may then be turned over such that the underside of top portion **435** is facing upwards, and the contents of computer housing **405** can be placed into top portion **435**, and top portion **435** and bottom portion **440** can be affixed to one another. As still another alternative, flexible wing body **410** may be separately formed, such as by a conventional molding process, and computer housing **405**, and in particular top portion **435** of computer housing **405**, may be affixed to flexible wing body **410** by one of several known methods, such as by an adhesive, by snap-fitting, or by screwing the two pieces together. Then, the remainder of computer housing **405** would be assembled as described above. It will be appreciated that rather than assembling the remainder of computer housing **405** after top portion **435** has been affixed to flexible wing body **410**, the computer housing **405** could be assembled first and then affixed to flexible wing body **410**.

Referring to FIG. **21**, a block diagram of an alternate embodiment of the present invention is shown. This alternate embodiment includes stand alone sensor device **700** which functions as an independent device, meaning that it is capable of collecting and/or generating the various types of data described herein in connection with sensor device **10** and sensor device **400** and providing analytical status data to the user without interaction with a remotely located apparatus such as central monitoring unit **30**. Stand alone sensor device **700** includes a processor that is programmed and/or otherwise adapted to include the utilities and algorithms necessary to create analytical status data from the data indicative of various physiological and/or contextual parameters of the user, the data derived therefrom, and the data input by the user, all of which is stored in and accessed as needed from memory provided in stand alone sensor device **700**. Stand alone sensor device **700** may comprise sensor device **10** shown in FIGS. **1** and **2** that includes microprocessor **20** and memory **22** or armband sensor device **400** shown in FIGS. **12-17** that includes processing unit **490** and SRAM **610**.

As shown schematically in FIG. **21**, data may be input into stand alone sensor device **700** in a number of ways. Stand alone sensor device **700** may include one or more physiological sensors **705** as described herein for facilitating the collection of data indicative of various physiological parameters of the user. Stand alone sensor device **700** may also include one or more contextual sensors **710** as described herein for facilitating the collection of data indicative of various contextual parameters of the user. As indicated by reference number **715**, stand alone sensor device **700** may be adapted to enable the manual entry of data by the user. For example, stand alone sensor device **700** may include a data input button, such as a button **470** of armband sensor device **400**, through which a

user could manually enter information such as information relating to various life activities of the user as described herein or information relating to the operation and/or control of stand alone sensor device **700**, for example, the setting of reminders or alerts as described herein. In this example, activation of button **470** may simply record or time stamp that an event such as a meal has occurred, with the wearer needing to assign a meaning to that time stamp through data entry at a later time. Alternatively, activation of button **470** in certain sequences, such as one activation, two successive activations, three successive activations, etc., can be preset to have different specific meanings. A wearer would need to follow a menu or guide of such preset activation sequences to input relevant data. Alternatively, stand alone sensor device **700** may include a more sophisticated means for manual entry of information such as a keypad, a touch screen, a microphone, or a remote control device, for example a remote control device incorporated into a wristwatch. In the case of a microphone, the processor of stand alone sensor device **700** would be provided with well known voice recognition software or the like for converting the input speech into usable data.

As indicated by reference numbers **720** and **725**, information comprising data indicative of various physiological and/or contextual parameters and data derived therefrom may be input into stand alone sensor device **700** through interaction with other devices. In addition, information such as handshake data or data indicative of various physiological and/or contextual parameters and data derived therefrom may be output from stand alone sensor device **700** to such other devices. According to one embodiment, the interaction is in the form of wireless communication between stand alone sensor device **700** and another device capable of wireless communication by way of a wireless transceiver provided in stand alone sensor device **700**, such as wireless transceiver **565** shown and described in connection with FIG. **20**. The device-to-device interaction may, as shown by reference number **720**, be explicit, meaning that the user of stand alone sensor device **700** has knowingly initiated the interaction. For example, a user may activate a button on a scale to upload data to stand alone sensor device **700**. The device-to-device interaction may also, as shown by reference number **725**, be hidden, meaning that the user of stand alone sensor device **700** does not knowingly initiate the interaction. For example, a gym may have a sensor that wirelessly transmits a signal to sensing device **700** when the user enters and leaves the gym to time stamp when the user began and ended a workout.

As shown schematically in FIG. **21**, information may be output or transmitted from stand alone sensor device **700** in a number of ways. Such information may include the data indicative of various physiological parameters and/or contextual parameters, the data derived therefrom, the data manually input by the user, the analytical status data, or any combination thereof. As shown by reference numbers **730**, **735** and **740**, information may be output or transmitted in an audible fashion such as by a series of tones or beeps or a recorded voice by a device such as a speaker, in a visual fashion such as by one or more LEDs, or in a tactile fashion such as by vibration. For example, stand alone sensor device **700** may be adapted to output a tone or tones, light an LED or LEDs, or vibrate as a reminder for an event, such as a reminder to eat or exercise at a particular time, or when a goal has been reached, such as a target number of calories burned during a workout, or a condition has been sensed, such as ovulation. Alternatively, stand alone sensor device **700** may be provided with a more sophisticated visual output means such as an LCD similar to those found on commercially available cell phones, pagers and personal digital assistants. With an LCD or a similar device and the expanded visual output capabilities it would provide, stand alone sensor device **700** may be adapted to output or transmit some or all of the information described in connection with FIGS. **5** through **11** in the same or a similar format. For example, stand alone sensor device **700** could provide analytical status data in the form of the Health Index to the user. As a further alternative, stand alone sensor device **700** may be coupled to computing device **750** such as a personal computer, a cell phone, a pager, a personal digital assistant, another stand alone sensor device **700** or any other device having a processor by either wired connection **755** or wireless connection **760**. For example, battery recharger unit **480** shown in FIG. **19** may be used to provide the wired connection **755** or wireless connection **760**. In this configuration, the display of the computing device could be used to visually output information from stand alone sensor device **700**. It will be appreciated that since computing device **750** includes a sophisticated output means such as an LCD, it may be used to output or transmit to the user some or all of the information described in connection with FIGS. **5** through **11**, such as the Health Index, in the same or a similar format.

Also, computing device **750** may in turn be used to control other devices, such as the lights or thermostat in a home, based on data output by stand alone sensor device **700**, such as the fact that the wearer has fallen asleep or the fact that the wearer's skin temperature has reached a certain level. In other words, stand alone sensor device **700**, and in particular its processor, may be adapted to cause a computing device **750** to trigger an event upon detection of one or more physiological and/or contextual conditions by stand alone sensor device **700**. Alternatively, stand alone sensor device **700** may be adapted to cause a computing device **750** to trigger an event based upon information received from another computing device **750**.

Stand alone sensor device **700** may be adapted to interact with and influence an interactive electronic media device, such as a video game, or non-interactive electronic media device, such as on a display device such as a DVD or digital video disc player playing a digitally recorded movie. For example, stand alone sensor device **700** may be adapted to transmit information relating to the physiological state of the wearer to the video game, which in turn adjusts the characteristics of the game, such as the level of difficulty. As another example, stand alone sensor device **700** may be adapted to transmit information relating to the physiological state of the wearer to the device displaying the digitally recorded movie which in turn adjusts the characteristics, such as the outcome, of the movie.

Furthermore, stand alone sensor device **700** may include location sensing device **765**, such as an ultrasonic or a radio-frequency identification tag, for enabling a computing device **750** to detect the geographic location of stand alone sensor device **700**, such as the location of stand alone sensor device **700** within a defined space such as a building. In one embodiment, a location indication causes computing device **750** to trigger an event, such as lowering the temperature in a room corresponding to the indicated location, preferably based on the detection by stand alone sensor device **700** of one or more physiological conditions of the wearer, such as skin temperature. In another embodiment, the location indication causes computing device **750** to trigger an event, such as lowering the temperature in a room corresponding to the indicated location, if stand alone sensor device **700** detects one or more physiological conditions, such as a skin temperature of the wearer being above a certain level. In addition, the input means of the computing device, such as the mouse and keyboard of a personal computer, the keypad of a cell phone or

pager, or the touch screen of a personal digital assistant, may be used to manually input information into stand alone sensor device **700**.

The different modes of output may be used in combination to provide different types and levels of information to a user. For example, stand alone sensor device **700** could be worn by an individual while exercising and an LED or a tone can be used to signal that a goal of a certain number of calories burned has been reached. The user could then transmit additional data wirelessly from stand alone sensor device **700** to a computing device **750** such as a cell phone after he or she is finished exercising to view data such as heart rate and/or respiration rate over time.

As a further alternative embodiment of the present invention, rather than the processor provided in stand alone sensor device **700** being programmed and/or otherwise adapted to generate the derived data and to include the utilities and algorithms necessary to create analytical status data, computing device **750** could be so programmed. In this embodiment, stand alone sensor device **700** collects and/or generates the data indicative of various physiological and/or contextual parameters of the user, the data manually input by the user, and/or data input as a result of device-to-device interaction shown at **720** and **725**, all of which is stored in the memory provided in stand alone sensor device **700**. This data is then periodically uploaded to computing device **750** which in turn generates derived data and/or analytical status data. Alternatively, the processor of stand alone sensor device **700** could be programmed to generate the derived data with computing device **750** being programmed and/or otherwise adapted to include the utilities and algorithms necessary to create analytical status data based on data indicative of one or more physiological and/or contextual parameters, data derived therefrom, data manually input by the user and/or data input as a result of device-to-device interaction shown at **720** and **725** uploaded from stand alone sensor device **700**. As still a further alternative, the processor of stand alone sensor device **700** could be programmed and/or otherwise adapted to include the utilities and algorithms necessary to create analytical status data based on data indicative of one or more physiological and/or contextual parameters, data derived therefrom, data manually input by the user and/or data input as a result of device-to-device interaction shown at **720** and **725** uploaded from stand alone sensor device **700** with computing device **750** being programmed to generate the derived data. In either alternative, any or all of the data indicative of physiological and/or contextual parameters of the user, the data derived therefrom, the data manually input by the user, the data input as a result of device-to-device interaction shown at **720** and **725** and the analytical status data may then be viewed by the user using the output means of the programmed computing device **750** or another computing device **750** to which the data is downloaded. In the latter alternative, everything but the analytical status data may also be output by stand alone sensor device **700** as described herein.

Computing device **750** in these alternative embodiments may be connected to an electronic network, such as the Internet, to enable it to communicate with central monitoring unit **30** or the like. The programming of computing device **750** that enables it to generate the derived data and/or the analytical status data may, with such a configuration, be modified or replaced by downloading the relevant data to computing device **750** over the electronic network.

As still a further alternative embodiment, computing device **750** may be provided with a custom written plug-in adapted to provide data display functionality through use of a well known browser program. In this embodiment, stand alone sensor device **700** collects and/or generates the data indicative of various physiological and/or contextual parameters of the user, the derived data, the data input by the user, data input as a result of device-to-device interaction shown at **720** and **725**, and/or analytical status data based thereon and uploads this data to computing device **750**. The plug-in provided in computing device **750** then generates appropriate display pages based on the data which may be viewed by the user using the browser provided with computing device **750**. The plug-in may be modified/updated from a source such as central monitoring unit **30** over an electronic network such as the Internet.

Referring to FIGS. **22-26**, an alternate embodiment of a sensor device is shown at **800**. Sensor device **800** may be a specific embodiment of either sensor device **10** described in connection with FIGS. **1-11** or stand alone sensor device **700** described in connection with FIG. **21**. Sensor device **800** includes housing **805** affixed to flexible section **810**, which is similar to flexible wing body **410** shown in FIGS. **12-17**. Flexible section **810** is adapted to engage, such as by wrapping around or conforming to, at least a portion of the human body, such as the upper arm, to enable sensor device **800**, in combination with a removable strap **811** inserted through slots **812** provided in flexible section **810**, to be worn on the body. Preferably, flexible section **810** is made of a material having a durometer of between 75 and 85 Shore A. Flexible section **810** may take on a variety of shapes and may be made of a cloth material, a flexible plastic film, or an elastic material having an adhesive similar in structure to a Band-Aide disposable adhesive bandage. In the embodiment shown in FIGS. **22-26**, housing **805** is permanently affixed to flexible section **810**, such as by an over molding or co-molding process, through the use of an adhesive material, or by a fastening mechanism such as one or more screws. Housing **805** includes top portion **815** affixed to bottom portion **820** by any known means, including, for example, an adhesive material, screws, snap fittings, sonic welding, or thermal welding. According to a preferred embodiment, a watertight seal is provided between top portion **815** and bottom portion **820**. Such a water-tight seal is provided when sonic welding or thermal welding is used. Alternatively, an O-ring could be provided between top portion **815** and bottom portion **820** to create the water-tight seal.

As can be seen most readily in FIGS. **23**, **24** and **26**, affixed to bottom portion **820** of housing **805** are GSR sensors **825**. GSR sensors **825** measure the conductivity of the skin between two points and may comprise electrodes formed of a material such as stainless steel, gold or a conductive carbonized rubber. Preferably, GSR sensors **825** have an oblong, curved shape as shown in FIG. **23**, much like a kidney bean shape, that allows some portion of GSR sensors **825** to maintain contact with the body even if sensor device **800** is rocking or otherwise moving while being worn. Most preferably, GSR sensors **825** include raised bumps **830**, or some other three-dimensional textured surface, along the surface thereof to perturb the skin and push between hairs to ensure good contact with the skin. In addition, raised bumps **830** provide channels for the movement of sweat underneath sensor device **800**, rather than trapping sweat, no matter the orientation of sensor device with respect to the body. Also affixed to bottom portion **820** are heat flux skin interface component **835** and skin temperature skin interface component **840**, each comprising a plate made of a thermally conductive material such as stainless steel. Preferably, heat flux skin interface component **835** and skin temperature skin interface component **840** are made of a material having thermal conduction properties of at least 12.9 W/mK, such as 304 stainless steel. Preferably,

GSR sensors **825** are spaced at least 0.44 inches apart from one another, and at least 0.09 inches apart from heat flux skin interface component **835** and skin temperature skin interface component **840**. GSR sensors **825**, heat flux skin interface component **835** and skin temperature skin interface component **840** are adapted to be in contact with the wearer's skin when sensor device **800** is worn, and facilitate the measurement of GSR, heat flux from the body and skin temperature data. As can be seen most readily in FIGS. **22**, **24** and **26**, affixed to top portion **815** of housing **805** are heat flux ambient interface component **845** and ambient temperature interface component **850**, which also are made of a thermally conductive material such as stainless steel, preferably a material having thermal conduction properties of at least 12.9 W/mK, such as 304 stainless steel. Heat flux ambient interface component **845** and ambient temperature interface component **850** facilitate the measurement of heat flux from the body and ambient temperature, respectively, by providing a thermal interface to the surrounding environment. To further enhance the measurement of these parameters, holes **855** are provided in flexible section **810** to expose heat flux ambient interface component **845** and ambient temperature interface component **850** to the ambient air. Preferably, holes **855** are sized so that flexible section **810** occludes as little skin as possible in the regions surrounding heat flux ambient interface component **845** and ambient temperature interface component **850** so as to allow air flowing off of the skin of the wearer to pass these components.

GSR Sensors **825**, heat flux, skin interface component **835**, skin temperature skin interface component **840**, or any other sensing component that comes into contact with the skin may be provided with a plurality of microneedles for, among other things, enhancing electrical contact with the skin and providing real time access to interstitial fluid in and below the epidermis, which access may be used to measure various parameters such as pH level of the skin through electrochemical, impedance based or other well known methods. Microneedles enhance electrical contact by penetrating the stratum corneum of the skin to reach the epidermis. Such microneedles are well known in the art and may be made of a metal or plastic material. Prior art microneedles are described in, for example, U.S. Pat. No. 6,312,612 owned by the Procter and Gamble Company. Based on the particular application, the number, density, length, width at the point or base, distribution and spacing of the microneedles will vary.

Referring to FIG. **26**, which is a cross-section taken along lines A-A in FIG. **22**, the internal components of sensor device **800**, housed within housing **805**, are shown. Printed circuit board or PCB **860** is affixed to top portion **815** of housing **805** and receives and supports the electronic components provided inside housing **805**. Affixed to a bottom side of PCB **860** and electronically coupled to GSR sensors **825** are contacts **865**, which preferably comprise gold plated contact pins such as the Pogo® contacts available from Everett Charles Technologies in Pomona, Calif. Also affixed to the bottom side of PCB **860** is skin temperature thermistor **870**, a suitable example of which is the model 100K6D280 thermistor manufactured by BetaTherm Corporation in Shrewsbury, Mass. Skin temperature thermistor **870** is, according to a preferred embodiment, thermally coupled to skin temperature skin interface component **840** by a thermally conductive interface material **875**. Thermally conductive interface material **875** may be any type of thermally conductive interface known in the art, including, for example, thermally conductive gap fillers, thermally conductive phase change interface materials, thermally conductive tapes, thermally conductive cure-in-place compounds or epoxies, and thermal greases. Suitable thermally conductive interface materials include a boron nitride filled expanded polytetrafluoroethylene matrix sold under the trademark PolarChip CP8000 by W. L. Gore & Associates, Inc. and a boron nitride and alumina filled silicone elastomer on an adhesive backed 5 mil. (0.013 cm) thick aluminum foil carrier called A574, which is available from the Chomerics division of Parker Hannefin Corp. located in Woburn, Mass. Provided on top of PCB **860** is near-body ambient temperature thermistor **880**, a suitable example of which is the model NTHS040ZN0IN100KJ thermistor manufactured by Vishay Intertechnology, Inc. in Malvern, Pa. Near-body ambient temperature thermistor **880** is thermally coupled to ambient temperature interface component **850** by thermally conductive interface material **875**.

Still referring to FIG. **26**, a preferred embodiment of sensor device **800** includes a particular embodiment of an apparatus for measuring heat flux between a living body and the ambient environment described in U.S. Pat. No. 6,595,929 B2 owned by the assignee hereof, the disclosure of which is incorporated herein by reference in its entirety. Specifically, heat conduit **885** is provided within housing **805**. As used herein, the term heat conduit refers to one or more heat conductors which are adapted to singly or jointly transfer heat from one location to another, such as a conductor made of stainless steel. Heat conduit **885** is thermally coupled to heat flux skin interface component **835** by thermally conductive interface material **875**. Provided on the bottom side of PCB **860** is a first heat flux thermistor **890**A, and provided on the top side of PCB **860** is a second heat flux thermistor **890**B. PCB **860** acts as a base member for supporting these components. It will be appreciated that a base member separate and apart from PCB **860** may be substituted therefor as an alternative configuration. A suitable example of both heat flux thermistors **890**A and **890**B is the model 100K6D280 thermistor manufactured by BetaTherm Corporation in Shrewsbury, Mass. Heat flux Thermistor **890**A and **890**B are soldered to pads provided on PCB **860**. The second heat flux thermistor **890**B is thermally coupled to heat flux ambient interface **845** by thermally conductive interface material **875**. As is well-known in the art, PCB **860** is made of a rigid or flexible material, such as a fiberglass, having a preselected, known thermal resistance or resistivity K. The heat flux off of the body of the wearer can be determined by measuring a first voltage V1 with heat flux thermistor **890**A and a second voltage V2 with heat flux thermistor **890**B. These voltages are then electrically differenced, such as by using a differential amplifier, to provide a voltage value that, as is well known in the art, can be used to calculate the temperature difference (T2−T1) between the top and bottom sides of PCB **860**. Heat flux can then be calculated according to the following formula:

$$\text{Heat Flux}=K(T2-T1)$$

The combination of PCB **860** and heat flux thermistors **890**A and **890**B are thus a form of a heat flux sensor One advantage of the configuration of the apparatus for measuring heat flux shown in FIG. **26** is that, due to the vertical orientation of the components, assembly of the apparatus for measuring heat flux, and thus sensor device **800** as a whole, is simplified. Also adding to the simplicity is the fact that thermally conductive interface materials that include a thin adhesive layer on one or both sides may be used for thermally conductive interface materials **875**, enabling components to be adhered to one another. In addition, thermistors **890**A and **890**B are relatively inexpensive components, as compared to an integral heat flux sensor such as those commercially available from RdF Corporation of Hudson, N.H., thereby reducing the cost

of sensor device **800**. Although heat flux thermistors **890**A and **890**B are described as being provided on PCB **860** in the embodiment shown in FIG. **26**, it will be appreciated that any piece of material having a known resistivity K may be used. Furthermore, other temperature measuring devices known in the art, such as a thermocouple or thermopile, may be substituted for heat flux thermistors **890**A and **890**B. As a further alternative, heat conduit **885** may be omitted such that thermal communication between heat flux thermistor **890**A and heat flux skin interface component **835** is provided by one or more pieces of thermally conductive interface material **875**. As still a further alternative, heat flux skin interface component **835** may be omitted such that thermal communication between heat flux thermistor **890**A and the skin is provided by either or both of heat conduit **885** and one or more pieces of thermally conductive interface material **875**. In any of the embodiments described herein, the combination of one or more of heat conduit **885**, one or more pieces of thermally conductive interface material **875**, and heat flux skin interface component **835** act as a thermal energy communicator for placing heat flux thermistor **890**A in thermal communication with the body of the wearer of sensor device **800**.

FIG. **27** is a schematic diagram that shows an embodiment of the system architecture of sensor device **800**, and in particular each of the components that is either provided on or coupled to PCB **860**.

As shown in FIG. **27**, PCB **860** includes processing unit **900**, which may be a microprocessor, a microcontroller, or any other processing device that can be adapted to perform the functionality described herein, in particular the functionality described in connection with microprocessor **20** shown in FIG. **2**, processing unit **490** shown in FIG. **20**, or stand alone sensor device **700** shown in FIG. **21**. A suitable example of processing unit **900** is the Dragonball EZ sold by Motorola, Inc. of Schaumburg, Ill. Also provided on PCB **860** is accelerometer **905**, which may be either a two-axis or a three-axis accelerometer. A suitable example of a two-axis accelerometer is the Model ADXL202 accelerometer sold by Analog Devices, Inc. of Norwood, Mass., and a suitable example of a three-axis accelerometer is the model ACH-04-08-05 accelerator sold by Measurement Specialties Incorporated in Norristown, Pa. The output signals of accelerometer **905** are passed through buffers **910** and input analog to digital, referred to as A/D, converter **915** that in turn is coupled to processing unit **900**. GSR sensors **825** are coupled to A/D converter **915** through current loop **920**, low pass filter **925**, and amplifier **930**. Current loop **920** comprises an opamp and a plurality of resistors, and applies a small, fixed current between the two GSR sensors **825** and measures the voltage across them. The measured voltage is directly proportional to the resistance of the skin in contact with the electrodes. Similarly, heat flux thermistors **890**A and **890**B are coupled to A/D converter **915** and processing unit **900**, where the heat flux calculations are performed, through low pass filter **935** and amplifier **940**.

Battery monitor **945**, preferably comprising a voltage divider with low pass filter to provide average battery voltage, monitors the remaining power level of rechargeable battery **950**. Rechargeable battery **950** is preferably a LiIon/LiPolymer 3.7 V Cell. Rechargeable battery **950**, which is the main power source for sensor device **800**, is coupled to processing unit **900** through voltage regulator **955**. Rechargeable battery **950** may be recharged either using recharger **960** or USB cable **965**, both of which may be coupled to sensor device **800** through USB interface **970**. Preferably, USB interface **970** is hermetically sealable, such as with a removable plastic or rubber plug, to protect the contacts of USB interface **970** when not in use.

PCB **860** further includes skin temperature thermistor **870** for sensing the temperature of the skin of the wearer of sensor device **800**, and near-body ambient temperature thermistor **880** for sensing the ambient temperature in the area near the body of the wearer of sensor device **800**. Each of these components is biased and coupled to processing unit **900** through A/D converter **915**.

According to a specific embodiment of sensor device **800**, PCB **860** may include one or both of an ambient light sensor and an ambient sound sensor, shown at **975** in FIG. **27**, coupled to A/D converter **915**. The ambient light sensor and ambient sound sensor may be adapted to merely sense the presence or absence of ambient light or sound, the state where a threshold ambient light or sound level has been exceeded, or a reading reflecting the actual level of ambient light or sound. A suitable example of an ambient sound sensor is the WM-60A Condenser Microphone Cartridge sold by Matsushita Electric Corporation of America located in Secaucus, N.J., and suitable examples of an ambient light sensor are the Optek OPR5500 phototransistor and the Optek OPR5910 photodiode sold by Optek Technology, Inc. located in Carrollton, Tex. In addition, PCB **860** may include ECG sensor **980**, including two or more electrodes, for measuring the heart rate of the wearer, and impedance sensor **985**, also including a plurality of electrodes, for measuring the impedance of the skin of the wearer. Impedance sensor **985** may also be an EMG sensor which gives an indication of the muscular activity of the wearer. The electrodes forming part of ECG sensor **980** or impedance sensor **985** may be dedicated electrodes for such sensors, or may be the electrodes from GSR sensors **825** multiplexed for appropriate measurements. ECG sensor **980** and impedance sensor **985** are each coupled to A/D converter **915**.

PCB **860** further includes RF transceiver **990**, coupled to processing unit **900**, and antenna **995** for wirelessly transmitting and receiving data to and from wireless devices in proximity to sensor device **800**. RF transceiver **990** and antenna **995** may be used for transmitting and receiving data to and from a device such as a treadmill being used by a wearer of sensor device **800** or a heart rate monitor worn by the wearer of sensor device **800**, or to upload and download data to and from a computing device such as a PDA or a PC. In addition, RF transceiver **990** and antenna **995** may be used to transmit information to a feedback device such as a bone conductivity microphone worn by a fireman to let the fireman know if a condition that may threaten the fireman's safety, such as hydration level or fatigue level, has been sensed by sensor device **800**. As described in detail in connection with FIG. **21**, stand along sensor device **700** may be coupled to computing device **750** to enable data to be communicated therebetween. Thus, as a further alternative, RF transceiver **990** and antenna **995** may be used to couple sensor device **800** to a computing device such as computing device **750** shown in FIG. **21**. Such a configuration would enable sensor device **800** to transmit data to and receive data from the computing device **750**, for example a computing device worn on the wrist. The computing device could be used to enable a user to input data, which may then be stored therein or transmitted to sensor device **800**, and to display data, including data transmitted from sensor device **800**. The configuration would also allow for computing tasks to be divided between sensor device **800** and computing device **750**, referred to herein as shared computing, as described in detail in connection with FIG. **21**.

As shown in FIG. **27**, PCB **860** may include proximity sensor **1000** which is coupled to processing unit **900** for sensing whether sensor device **800** is being worn on the body. Proximity sensor **1000** may also be used as a way to automatically power on and off sensor device **800**. Proximity sensor preferably comprises a capacitor, the electrical capacitance of which changes as sensor device **800** gets closer to the body. PCB **860** may also include sound transducer **1005**, such as a ringer, coupled to processing unit **900** through driver **1010**.

Sensor device **800** may also be provided with sensors in addition to those shown in FIG. **27**, such as those taught by U.S. Pat. No. 5,853,005, the disclosure of which is incorporated herein by reference. The '005 patent teaches a sound transducer coupled to a pad containing an acoustic transmission material. The pad and sound transducer may be used to sense acoustic signals generated by the body which in turn may be converted into signals representative of physiological parameters such as heart rate or respiration rate. In addition, rather than being integrated in sensor device **800** as part of one or more of housing **805**, flexible section **810** or strap **811**, a sensing apparatus as taught by the '005 patent may be provided separate from sensor device **800** and be coupled, wired or wirelessly, to sensor device **800**. According to the '005 patent, the sound or acoustic transducer is preferably a piezoelectric, electret, or condenser-based hydrophone, similar to those used by the Navy in sonar applications, but can be any other type of waterproof pressure and motion sensing type of sensor.

The sensing apparatus as taught by the '005 patent is an example of what shall be referred to herein as a non-ECG heart parameter sensor, meaning that it has the following two qualities: (1) it does not need to make measurements across the torso using at least two contacts separated by some distance; and (2) it does not measure electrical activity of the heart. The sensing apparatus as taught by the '005 patent has been shown to be capable of detecting heart rate information and information relating to individual beats of the heart with high reliability under certain circumstances, depending primarily on factors including the proximity of the apparatus to the heart, the level of ambient noise, and motion related sound artifacts caused by the movement of the body. As a result, the sensing apparatus as taught by the '005 patent is most reliable when worn in an ambient environment with a low level of ambient noise and when the body is not moving.

Certain characteristics, sensors and sensing capabilities of sensor device **800** are able to improve the reliability and accuracy of an acoustic-based non-ECG heart parameter sensor **1012** such as the sensing apparatus as taught by the '005 patent that is incorporated therein or coupled thereto. For example, in one specific embodiment, sensor device **800** is particularly suited to be worn on the upper arm. The upper arm is a good location for a sensor device **800** having an acoustic-based non-ECG heart parameter sensor **1012** incorporated therein because it is near the heart and provides a space for sensor device that allows it to be unobtrusive and comfortable to wear. In addition, ambient sound sensor shown at **975** in FIG. **27** may be used to filter out ambient noise from the signals detected by the acoustic-based non-ECG heart parameter sensor **1012** in order to isolate the sound signals originating from the body. Filtering of the signal produced by an acoustic-based non-ECG heart parameter sensor **1012** such as the sensing apparatus as taught by the '005 patent in this manner may be used both in the case where such an apparatus is incorporated in sensor device **800** and in the case where it is separated from but coupled to sensor device **800** as described above. Furthermore, the sound generated from the motion of the body that is not created by the heart can be accounted for and adjusted for through the use of a sensor or sensors that detect or that may be used to identify body sounds generated as a result of motion of the body, such as accelerometer **905** shown in FIGS. **27** and **29** or the body position or muscle pressure sensors identified in Table 1. For example, footfalls create sound within the body that can lower the signal to noise ratio of an acoustic-based non-ECG heart parameter sensor **1012**, which will likely result in false positive and false negative heart beat identifications. As is well known in the art, accelerometer **905** may function as a footfall indicator. Accelerometer **905** may thus be used to filter or subtract out from the signal detected by the acoustic-based non-ECG heart parameter sensor **1012** signals related sound motion artifacts caused by the movement of the body such as by footfalls.

Several methodologies for performing the filtering or subtracting of signals described herein are known to those of ordinary skill in the art. Such filtering or subtracting of signals used in connection with the monitoring of disparate signals, some used for noise cancellation and some used for their direct measure, is also known as data integration.

Sensor device **800** may also be used to put parameters around and provide a context for the readings made by a non-ECG heart parameter sensor **1012** so that inaccurate readings can be identified and compensated for. For example, sensor device **800** may be used to detect real time energy expenditure of the wearer as well as the type of activity in which the wearer is engaging, such as running or riding a bike. Thus, as another example of how the sensors and sensing capabilities of sensor device **800** may be used to increase the reliability and accuracy of a non-ECG heart parameter sensor **1012** through data integration, the energy expenditure and activity type information can be used to provide a context in which the heart related parameters detected by the non-ECG heart parameter sensor **1012** can be assessed and possibly filtered. For example, if sensor device **800** detects that a person is burning 13 calories per minute and is biking, and the non-ECG heart parameter sensor **1012** is indicating that the wearer's heart rate is 60 beats per minute, then it is highly likely that further filtration of the signal from the non-ECG heart parameter sensor **1012** is necessary.

Other well known non-ECG heart parameter sensing devices include, for example, those based on micro-power impulse radar technology, those based on the use of piezoelectric based strain gauges, and those based on plethysmography, which involves the measurement of changes in the size of a body part as modified by the circulation of blood in that part. It will be appreciated that the performance of these devices may also be enhanced through the use of data integration as described herein.

Another sensor that may be incorporated into the sensor device **800** measures the pressure with which sensor device **800** is held against the body of the wearer. Such a sensor could be capacitive or resistive in nature. One such instantiation places a piezo-resistive strain gauge on the back of the enclosure to measure the small deflection of the plastic as increasing force is applied. Data gathered from such a sensor can be used to compensate the readings of other sensors in sensor device **800** according to the readings of such as a sensor.

Also provided on PCB **860** and coupled to processing unit **900** is switch **1015**. Switch **1015** is also coupled to button **1020** provided on housing **805**. Button **1020**, by activating switch **1015**, may be used to enter information into sensor device **800**, such as a time stamp to mark the occurrence of an event such taking medication. Preferably, button **1020** has a tactile, positive d-tent feedback when depressed, and a con-

cave shape to prevent accidental depression. Also, in the embodiment shown in FIGS. **22-26**, flexible section **810** includes membrane **1022** that covers and seals button **1020**. In the embodiments shown in FIGS. **30-32**, a similar membrane **1022** may be provided on flexible section **810**, and, preferably, also on housing **805** such that button **1020** is sealed when housing **805** is removed from flexible section **810**. Alternatively, a hole may be provided in flexible section **810** exposing button **1020** and membrane **1022** when housing **805** is attached to flexible section **810**. In addition, coupled to processing unit **900** on PCB **860** are LCDs and/or LEDs **1025** for outputting information to the wearer. FIG. **28** shows an alternate embodiment of sensor device **800** in which LCD **1025** is provided on a top face of housing **805**. As an alternative to LCDs or LEDs **1025**, sensor device **800** may include a prior art electrochemical display that retains its ability to display information even when power is no longer being provided thereto. Such a display is described in U.S. Pat. No. 6,368,287 B1, the disclosure of which is incorporated herein by reference, and includes a plurality of markers comprising a miniature heating element and a coating of heat sensitive material. When current is passed through one of the heating elements, it heats up, thereby inducing a change in the color of the coating material. The color change is permanent, even after the heating element cools down. Such displays are relatively inexpensive and thus are well adapted for use in embodiments of sensor device **800** that are designed to be disposable, possibly single use, items.

Oscillator **1030** is provided on PCB **860** and supplies the system clock to processing unit **900**. Reset circuit **1035** is coupled to processing unit **900** and enables processing unit to be reset to a standard initial setting.

Finally, non-volatile data storage device **1040**, such as a FLASH memory chip, is provided for storing information collected and/or generated by sensor device **800**. Preferably, data storage device **1040** includes at least 128K of memory. Non-volatile program storage device **1045**, such as a FLASH ROM chip, is provided for storing the programs required to operate sensor device **800**.

As an alternative, a microprocessor with integral A/D converters, data storage, and program storage may be substituted for processing unit **900**, A/D converter **915**, data storage device **1040** and non-volatile memory **1045**. A suitable example of such a microprocessor is the Texas Instruments Model MSP430 processor.

Any component forming a part of sensor device **800** that comes in contact with the wearer's skin should not, in a preferred embodiment, degrade in durometer, elasticity, color or other physical or chemical properties when exposed to skin oils, perspiration, deodorant, suntan oils or lotions, skin moisturizers, perfume or isopropyl alcohol. In addition, such components preferably are hypoallergenic.

FIG. **29** shows an alternate embodiment of PCB **860** in which rechargeable battery **950**, voltage regulator **955**, recharger **960** and USB cable **965** have been replaced by disposable AAA battery **1050** and boost converter **1055**. Boost converter **1055** uses an inductor to boost the voltage of AAA battery **1050** to the 3.0-3.3 V required to run the electronics on PCB **860**. A suitable boost converter **1055** is the model MAX 1724 sold by Maxim Integrated Products, Inc. of Sunnydale, Calif.

Referring to FIGS. **30** and **31**, an alternate embodiment of sensor device **800** is shown in which housing **805** is removably attached to flexible section **810**. As shown in FIGS. **30** and **31**, housing **805** is provided with groove **1060** along the outer edge thereof which is adapted to receive therein tongue **1065** provided on the bottom side of flexible section **810** for securely but removably attaching housing **805** to flexible section **810**. Through the interaction of groove **1060** and tongue **1065**, housing **805** may thus be readily popped in and out of flexible section **810**. Such a configuration enables housing **805** to be readily attached to multiple flexible sections having sizes and shapes that are different than flexible section **810** as long as the flexible section includes a tongue similar to tongue **1065**. Such alternate flexible sections may be sized and shaped to fit on particular parts of the body, such as the calf or thigh, and may comprise a garment such as a shirt having the tongue or tongues located in places of interest, such as the upper arm or upper left chest, the latter enabling housing **805** to be positioned over the heart of the wearer, as shown in FIGS. **40**A and **40**B. U.S. Pat. No. 6,527,711, owned by the assignee of the present application and incorporated herein by reference, identifies several locations on the body that are particularly well adapted to receive particularly sized and shaped sensor devices so as to avoid interference with the motion and flexibility of the body. As will be appreciated by those of skill in the art, groove **1060** and tongue **1065** may be swapped such that groove **1060** is provided in flexible section **810** and tongue **1065** is provided on housing **805**. As will also be appreciated by those of skill in the art, multiple alternative structures exist for securely but removably attaching housing **805** to flexible section **810**. These alternative structures include, without limitation, temporary adhesives, screws, a tight fit between having **805** and flexible section **810** that holds the two together by friction, magnets provided in each of housing **805** and flexible section **810**, well-known snaps and snapping mechanisms, a threaded portion provided on housing **805** adapted to be received by threads in flexible section **810**, an O-ring or similar elastic band adapted to fit around a portion of flexible section **810** and into a groove provided in housing **805** when flexible section **810** is placed over housing **805**, or merely pressure when housing **805** is placed on the body and flexible section **810** is placed thereover and attached to the body such as by strap **811**. Referring to FIG. **32**, a still further alternative structure for removably securing flexible section **810** to housing **805** is shown in which flexible section **810** comprises and elastic or similar band that is adapted to fit into a groove **1062** provided in housing **805**. Housing **805** and flexible section **810** may then be placed on the body and held in place by strap **811** or the like inserted through gaps **1064** between housing **805** and flexible section **810**.

FIG. **33** shows an alternate embodiment of sensor device **800** as shown in FIGS. **30** and **31** that is adapted to automatically adjust or alter the operating parameters of sensor device **800**, such as its functionality, settings or capabilities, depending on the particular flexible section to which housing **805** is attached. For example, the calculation of a parameter, such as energy expenditure, may depend on information that is particular each individual, such as age, height, weight, and sex. Rather than having each individual enter that information in sensor device **800** each time he or she wants to wear the device, each individual that is going to wear the device could enter the information once and have their own flexible section that causes sensor device to make measurements based on his or her particular information. Alternatively, the memory in sensor device **800** for storage of user data may be divided into several compartments, one for each user, so as to avoid comingling of user data. Sensor device **800** may be adapted to alter where collected data is stored depending on the particular flexible section that is being used. In addition, sensor device **800** may be calibrated and recalibrated differently over time depending on the particular flexible section to which

housing **805** is attached as it learns about each particular wearer and his or her habits, demographics and/or activities.

According to a particular embodiment, housing **805** is provided with first magnetic switch **1070** and second magnetic switch **1075**, each on PCB **860**. Provided on or inside flexible section **810**, such as by an insert molding technique, is magnet **1080**. Magnet **1080** is positioned on or inside flexible section **810** such that it aligns with and thereby activates one of first magnetic switch **1080** and second magnetic switch **1075** when housing **805** is attached to flexible section **810**. In the embodiment shown in FIG. **33**, second magnetic switch **1075** will be activated. A second flexible section **810** similar to flexible section **810** shown in FIG. **33** will also be provided, the difference being that the magnet **1080** provided therewith will be positioned such that first magnetic switch **1070** is activated when housing **805**, the same housing **805** shown in FIG. **33**, is attached to the second flexible section **810**. Housing **805**, and in particular processing unit **900**, may be programmed to alter its functionality, settings or capabilities depending on which one of first magnetic switch **1070** and second magnetic switch **1075** is activated, i.e., which particular flexible section **810** is being used. Thus, a husband and wife may share a single housing **805** but have different flexible wings **810** with magnets **1080** located in different places. In such a case, housing **805** may be programmed to operate with functionality, settings or capabilities particular to the husband when first magnetic switch **1070** is activated, and with functionality, settings or capabilities particular to the wife when second magnetic switch **1075** is activated. Although only two magnetic switches are shown in FIG. **33**, it will be appreciated that multiple magnetic switches and multiple flexible sections may be used to allow sensor device **800** to be programmed for multiple wearers, such as an entire family, with each family member having his or her own flexible section. As still a further alternative, multiple flexible sections may be provided that are adapted to be worn on different parts of the body, each having a magnet placed in a different location. Housing **805** may then be programmed to have functionality, settings or capabilities particular to the type of sensing to be done on each different part of the body, with magnetic switches placed so as to be activated when housing **805** is attached to the appropriate flexible section. Sensor device **800** according to this embodiment is thus a "smart" device. As will be appreciated by one of skill in the art, many alternatives to first and second magnetic switches **1070** and **1075** and magnet **1080** may be used to provide the functionality described in connection with FIG. **33**. Such alternatives include, without limitation, mechanical switches provided in housing **805** that are activated by a protruding portion, such as a pin, provided at a particular location on flexible section **810**, optical switches comprising an array of light sensors provided in housing **805** that are activated when the surrounding light is blocked, reflected or filtered in a particular way with one or more translucent sections and a single opaque, reflective or filtering section being selectively provided on flexible section **810** at particular locations, the translucent sections not activating the corresponding optical switches and the opaque, reflective or filtering section activating the corresponding optical switch, electronic switches provided in housing **805** activated by a conductor provided in particular locations in flexible section **810**. As still a further alternative, housing **805** may be provided with multiple switches and each flexible section **810** may be provided with one or more switch activators positioned to activate certain selected switches. The operating parameters of housing **805** would in this embodiment be adapted to change depending upon the particular set of one or more switches that are activated. This embodiment thus employs an encoding scheme to alter the operating parameters of housing **805** depending on which flexible section **810** is used. As still a further alternative, housing **805** may be provided with a single switch adapted to alter the operating parameters of housing **805** depending upon the way in which or state in which it is activated, such as by the properties of the switch activators. For example, the switch may be a magnetic switch that is activated a plurality of different ways depending upon the magnetic level or strength of the magnet provided in each flexible section **810**. A plurality of flexible sections **810** could then be provided, each having a magnet of a different strength. In addition, any particular flexible section **810** may be provided with a plurality of magnets having different strengths with each magnet being able to activate the switch in housing **805** in a different manner. Such a flexible section **810** would be able to selectively trigger different operating parameters of housing **805**, such as by rotating a portion of flexible wing **805** to align a particular magnet with the switch. As an alternative, the switch could be an electrical switch and the switch activators could be conductors having different resistances. The switch would, in this embodiment, be activated in different ways depending on the measured resistance of the switch activator that closes the circuit.

Referring to FIG. **34**, as still a further embodiment of sensor device **800**, housing **805** may be provided with adhesive material **1085** on a back side thereof to enable housing **805** to be removably attached to selected portions of the body, such as the upper left chest over the heart, without flexible section **810**. Adhesive material **1085** may be any well-known adhesive that would securely attach housing **805** to the body and enable it to be worn for a period of time, but that would also readily enable housing **805** to be removed from the body after use. Adhesive material **1085** may comprise, for example, a double sided adhesive foam backing that would allow for comfortable attachment of housing **805** to the body. Furthermore, housing **805** may be made of a well-known flexible plastic film or the like, such as that taught in U.S. Pat. No. 6,368,287 B1, the disclosure of which is incorporated herein by reference, that would, due to low cost, enable sensor device **800** to be disposable. Such a disposable sensor device may also include an electrochemical display described above to enhance its disposability. In an embodiment adapted for placement over the upper left chest or any other appropriate region for detecting heart related parameters, sensor device **800** would include one or more sensors described herein for sensing heart related parameters such as heart rate, beat-to-beat or interbeat variability, ECG or EKG, pulse oximetry, heart sounds, such as detected with a microphone, and mechanical action of the heart, such as detected with ultrasound or micro-pulse radar devices.

FIGS. **35**A-H and **36**A-H illustrate aspects of the present invention relating to the ergonomic design of sensor device **800**. Referring to FIGS. **35**A and **35**B, a housing **1100** of a prior art sensor device having a rectangular cross-section is shown resting on the body **1110** of a wearer of the prior art sensor device. As seen in FIG. **35**B, when body **1110** flexes and forms a concavity, as may happen many times each minute on various parts of the body or for extended periods of time depending on the position of various body parties during particular activities, a significant portion of housing **1100** is caused to be removed from body **1110**. When housing **1100** is caused to be removed in this manner, the ability of the prior art sensor device to accurately make measurements and collect data will be jeopardized, especially for any readings to be taken near the center of the cross-section indicated by the arrows in FIG. **35**B.

FIGS. **35**C-H illustrate a cross-section of housing **805** of sensor device **800** taken along lines C-C shown in FIG. **23** according to various aspects of the present invention. The cross-section shown in FIGS. **35**C-H is taken near the middle portion of housing **805** shown in FIG. **23** between GSR sensors **825**. As seen in FIG. **35**C, bottom surface **1115** of housing **805** is provided with a generally convex shape such that, when body **1110** flexes and forms a concavity, a substantial portion of bottom surface **1115** of housing **805** remains in contact with body **1110** by fitting into the concavity. As seen in FIG. **35**D, when body **1110** flexes in the opposite direction so as to create a convexity, the center portion of housing **805**, indicated by the arrow in FIG. **35**D, remains in contact with body **1110**. As shown in FIG. **35**E, this is true even if housing **805** were to rock within the concavity formed in body **1110**. Referring to FIG. **35**F, body **1110** may, at times, flex to an extreme degree, i.e., more than the anticipated maximum that it was designed for, such that, even if bottom surface **1115** is provided with a convex shape, it may still cause bottom surface **1115** to be removed from body **1110**. A solution to this problem is illustrated in FIG. **35**G, wherein the lateral ends **1120**A and **1120**B of housing **805** are provided with radiused portions **1125**A and **1125**B, respectively adjacent to and including opposite lateral ends of bottom surface **1115**. Radiused portions **1125**A and **1125**B enable housing **805** to sit lower and fit into the concavity created when body **1110** flexes to an extreme degree. In addition, radiused portions **1125**A and **1125**B provide for more comfortable wear as they eliminate sharp edges **1130**A and **1130**B shown in FIG. **35**F that contact body **1110**. FIG. **35**H shows how body **1110** will tend to conform to the shape of housing **805** due at least in part to the viscosity of the skin when body **1110** is in a relaxed condition.

FIG. **36**A shows a cross-section of housing **1100** of prior art sensor device taken along a line perpendicular to the line on which the cross-section shown in FIGS. **35**A and **35**B was taken. As seen in FIG. **36**A, when housing **1100** is placed on a convex portion of body **1110**, significant portions of housing **1100**, specifically the lateral ends thereof indicated by the arrows in FIG. **36**A, are not in contact body **1110**. FIGS. **36**B-H show a cross-section of housing **805** according to various aspects of the present invention taken along lines D-D shown in FIG. **23**. As seen in FIG. **36**B, bottom surface **1115** of housing **805** is provided with a generally concave shape adapted to receive the convex portion of body **1110**. Referring to FIG. **36**C, lateral ends **1130**A and **1130**B may be provided with radiused portions **1135**A and **1135**B adjacent to and including opposite lateral ends of bottom surface **1115**, which allow housing **805** to rest in closer contact with body **1110**, even when body **1110** flexes to an extreme degree, i.e., more than the anticipated maximum that it was designed for, and remove sharp edges **1140**A and **1140**B shown in FIG. **36**B, providing for more comfortable wear. As shown in FIG. **36**D, body **1110** will tend to conform to the shape of housing **805** when body **1110** is in a relaxed condition. As shown in FIGS. **36**E and **36**F, good contact with body **1110** is maintained at the points illustrated by the arrows when body **1110** is flexed in a manner that decreases the convex shape thereof or that creates a convexity therein. Thus, it will be appreciated that it is advantageous to place sensors or sensing elements at the points indicated by the arrows because those points will tend to remain in contact with body **1110**. FIGS. **36**G and **36**H, showing, for example, heat flux skin interface component **835** and skin temperature skin interface component **840** placed at the points indicated by the arrows, illustrate this point. As seen in FIGS. **36**G and **36**H, there is more than point contact between body **1110** and skin temperature skin interface component **840**.

FIG. **37** is an isometric view of housing **805** according to an embodiment of the present invention in which bottom surface **1115** has both the generally convex shape shown in FIGS. **35**C-H and the generally concave shape shown in FIGS. **36**B-H. Specifically, bottom surface **1115**, which is the inner surface of housing **805** for mounting adjacent to the body of the wearer, includes a longitudinal axis **1141** and a transverse axis **1142**. Bottom surface **115** has a generally concave shape having an axis of concavity **1143** that is coincident with longitudinal axis **1141**, meaning that it runs in a first direction from first lateral end **1144** of inner surface **1115** to second lateral end **1145** of inner surface **1115**. Bottom surface **1115** has a generally convex shape having an axis of convexity **1146** that is coincident with transverse axis **1142**, meaning that it runs in a second direction from third lateral end **1147** of inner surface **1115** to fourth lateral end **1148** of inner surface **1115**. As seen if FIG. **37**, the first and second directions, and longitudinal axis **1141** and transverse axis **1142**, are generally perpendicular to one another.

Referring to FIGS. **38**A-D, it will be appreciated that housing **805** having a flat top surface **1150** and flat lateral ends **1130**A and **1130**B may tend to be jostled and bumped by object **1155**, such as a wall or door or the corner or edge of a drawer, cabinet or desk, thereby moving housing **805** on body **1110** because such flat surfaces are not well adapted to deflect object **1155**. Movement of housing **805** on body **1110** will detrimentally effect the ability of sensor device **800** to accurately make measurements and collect data. FIGS. **39**A-G illustrate various aspects of the present invention that are adapted to deflect object **1155** and substantially prevent movement of housing **805** on body **1110**. In addition, the forms shown in FIGS. **39**A-G increase the durability of sensor device **800** and make it easier to put on and wear clothing and the like, such as a wetsuit, over sensor device **800**. As seen in FIG. **39**A, housing **805** may have tapered sides **1160**A and **1160**B such that the width of housing **805** decreases in the direction from bottom surface **1115** to top surface **1150**. Alternatively, referring to FIG. **39**B, top surface **1150** of housing **805** may have a convex shape. As a further alternative, as seen in FIG. **39**C, housing **805** may be provided with radiused portions **1165**A and **1165**B that meet with radiused portions **1135**A and **1135**B such that the lateral ends of housing **805** have a substantially semicircular shape. As shown in FIG. **39**D, housing **805** may have both tapered sides **1160**A and **1160**B and a top surface **1150** with a convex shape. FIG. **39**E is a modification of housing **805** shown in FIG. **39**E in which the points **1170**A and **1170**B where radiused portions **1135**A and **1135**B meet tapered sides **1160**A and **1160**B, respectively, are themselves radiused. FIG. **39**F is a variation of housing **805** shown in FIG. **39**E having elongated tapered sides **1160**A and **1160**B. FIG. **39**G shows how the ability of housing **805**, such as the embodiment shown in FIG. **39**E, to deflect object **1155** may be enhanced by the addition of flexible section **810** having a substantially convex outer surface. In addition, an air channel is provided between flexible section **810** and body **1110** to allow for heat to flow away from body **1110**.

The terms and expressions which have been employed herein are used as terms of description and not as limitation, and there is no intention in the use of such terms and expressions of excluding equivalents of the features shown and described or portions thereof, it being recognized that various modifications are possible within the scope of the invention claimed. Although particular embodiments of the present

invention have been illustrated in the foregoing detailed description, it is to be further understood that the present invention is not to be limited to just the embodiments disclosed, but that they are capable of numerous rearrangements, modifications and substitutions.

What is claimed is:

1. An apparatus, comprising:

a housing including a bottom surface having a concave shape and an adhesive material disposed on a portion of the bottom surface, the adhesive material operable to removably attach said housing to an individual;

a first sensor including a first pair of temperature measuring devices and a second pair of temperature measuring devices, the first sensor mounted within said housing, the first pair of temperature measuring devices configured to generate temperature-related data of the individual and the second pair of temperature measuring devices configured to generate near-body ambient temperature data of an area near the individual,

the first and second pairs of temperature measuring devices are spaced apart from each other on a printed circuit board disposed within the housing, the first pair of temperature measuring devices are disposed adjacent to each other on opposite sides of the printed circuit board, and the second pair of temperature measuring devices are disposed adjacent to each other on opposite sides of a printed circuit board;

a second sensor mounted within said housing, said second sensor to generate data related to a change in resistance across the individual's skin; and

a processing unit mounted within said housing in electronic communication with said first and second sensors, said processing unit programmed to use both of said temperature-related data from said first sensor and said data related to said change in resistance across the individual's skin from said second sensor to derive analytical status data.

2. The apparatus according to claim **1** wherein said housing is comprised of a flexible material.

3. The apparatus of claim **1** wherein said first sensor is a sensor selected from the group consisting of a thermistor, a thermocouple, and a thermopile.

4. The apparatus of claim **1** wherein said temperature-related data of said individual comprises said individual's skin temperature.

5. The apparatus of claim **1** wherein said temperature-related data of said individual comprises said individual's core temperature.

6. The apparatus of claim **1** wherein said second sensor comprises at least two electrodes.

7. The apparatus of claim **6** wherein said at least two electrodes comprise a textured surface.

8. The apparatus of claim **1** wherein said second sensor comprises a GSR sensor.

9. The apparatus of claim **8** wherein said GSR sensor comprises a skin contacting surface, said skin contacting surface being textured.

10. The apparatus of claim **1** further comprising a computing device in electronic communication with said processing unit.

11. The apparatus of claim **10** wherein said processing unit is located within said computing device.

12. The apparatus of claim **11** wherein said computing device is selected from the group consisting of a cellular phone, a personal computer, a pager, a personal digital assistant, and a sensor device.

13. The apparatus of claim **11** wherein processing unit is programmed to trigger an event based on said analytical status data.

14. The apparatus of claim **11** wherein said processing unit is programmed to control, based on said analytical status data, at least one of an interactive electronic media device and a separate apparatus.

15. The apparatus of claim **10** wherein said computing device is selected from the group consisting of a cellular phone, a personal computer, a pager, a personal digital assistant, and a sensor device.

16. The apparatus of claim **10** wherein said computing device comprises at least one structure configured to input additional information related to said individual.

17. The apparatus of claim **16** wherein said processing unit is programmed to use said additional information to derive said analytical status data.

18. The apparatus of claim **10** wherein said computing device is programmed to trigger an event based on said analytical status data.

19. The apparatus of claim **10** wherein said computing device is programmed to control, based on said analytical status data, at least one of an interactive electronic media device and a separate apparatus.

20. The apparatus of claim **1** further comprising at least one structure configured to input additional information related to said individual.

21. The apparatus of claim **20** wherein said processing unit is programmed to use said additional information to derive said analytical status data.

22. The apparatus of claim **1** wherein said processing unit is programmed to control a separate apparatus based on said analytical status data.

23. The apparatus of claim **1** wherein said processing unit is programmed to trigger an event based on said analytical status data.

24. The apparatus of claim **1** wherein said processing unit is programmed to control an interactive electronic media device based on said analytical status data.

25. The apparatus of claim **1** further comprising a display configured to display said analytical status data.

26. The apparatus of claim **25** wherein said display comprises an electrochemical display.

27. The apparatus of claim **1** wherein said analytical status data comprises an indicator of nutrition.

28. The apparatus of claim **1** wherein said analytical status data comprises an indicator of sleep.

29. The apparatus of claim **1** wherein said analytical status data comprises an indicator of activity level.

30. The apparatus of claim **1** wherein said analytical status data comprises an indicator of stress.

31. The apparatus of claim **1** wherein said analytical status data comprises an indicator of mind centering.

* * * * *