US009189944B2

(12) **United States Patent**
Johnson, Jr. et al.

(10) **Patent No.: US 9,189,944 B2**
(45) **Date of Patent: *Nov. 17, 2015**

(54) **SYSTEM FOR PROVIDING REAL TIME LOCATING AND GAS EXPOSURE MONITORING**

(71) Applicant: **Accenture Global Services Limited**, Dublin (IE)

(72) Inventors: **Ernest K Johnson, Jr.**, Novelty, OH (US); **Mark J. Davisson**, Rensselaer, IN (US)

(73) Assignee: **Accenture Global Services Limited**, Dublin (IE)

(*) Notice: Subject to any disclaimer, the term of this patent is extended or adjusted under 35 U.S.C. 154(b) by 0 days.

This patent is subject to a terminal disclaimer.

(21) Appl. No.: **14/610,505**

(22) Filed: **Jan. 30, 2015**

(65) **Prior Publication Data**

US 2015/0145686 A1 May 28, 2015

Related U.S. Application Data

(63) Continuation of application No. 13/863,726, filed on Apr. 16, 2013, which is a continuation of application No. 12/847,718, filed on Jul. 30, 2010, now Pat. No. 8,451,120, which is a continuation-in-part of

(Continued)

(51) **Int. Cl.**
G08B 17/10 (2006.01)
G08B 21/12 (2006.01)
(Continued)

(52) **U.S. Cl.**
CPC ***G08B 21/12*** (2013.01); ***G01N 33/0004*** (2013.01); ***G01N 33/0006*** (2013.01);
(Continued)

(58) **Field of Classification Search**
CPC G08B 21/12
USPC 340/632
See application file for complete search history.

(56) **References Cited**

U.S. PATENT DOCUMENTS

4,665,385 A 5/1987 Henderson
5,568,121 A 10/1996 Lamensdorf
(Continued)

FOREIGN PATENT DOCUMENTS

CA 1301844 C 11/2005
CN 2849859 Y 12/2006
(Continued)

OTHER PUBLICATIONS

U.S. Appl. No. 60/890,396 Unpublished.
(Continued)

Primary Examiner — Kerri McNally
(74) *Attorney, Agent, or Firm* — Brinks Gilson & Lione

(57) **ABSTRACT**

A system, method, and apparatus for gas exposure monitoring of a work area are described. The system may include components that receive an alarm data item from a sensor device. The alarm data item may be generated in response to a first user being exposed to a gas concentration measured by the sensor device. A processor may receive a location of the sensor device in the work area based on a location identifier of the sensor device. A second user located within a predetermined vicinity of the sensor device may be identified. The second user may be identified by the processor. The system may transmit an indication of the alarm data item received from the first user and the location of the sensor device in the work area to the second user. The transmission may be automatic on detection of the second user's location.

20 Claims, 20 Drawing Sheets

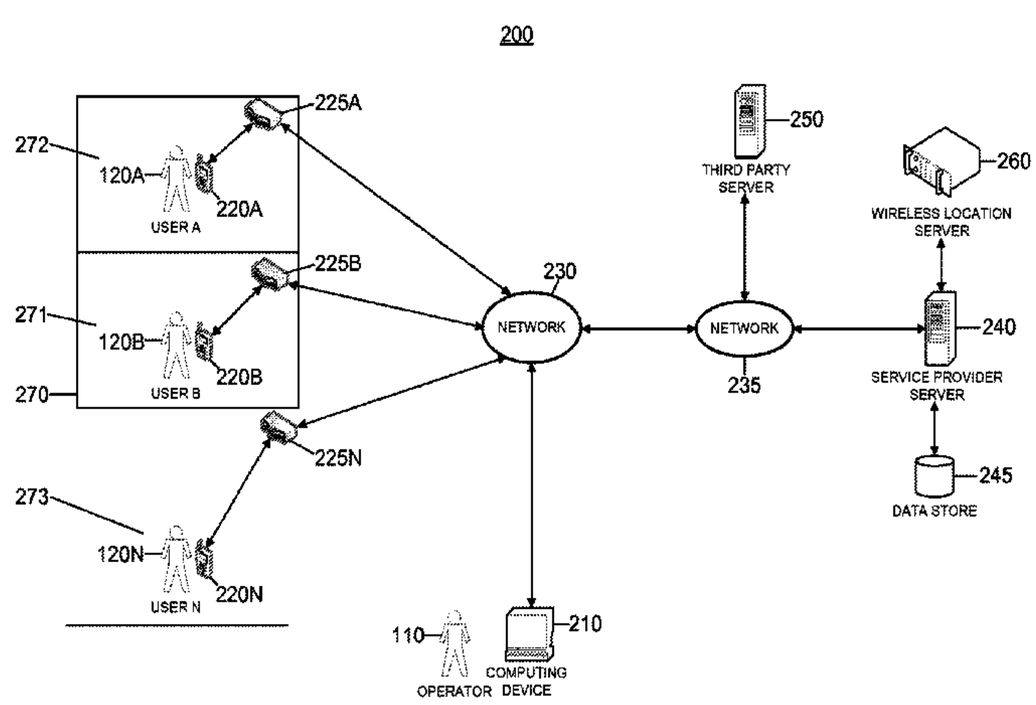

Related U.S. Application Data

application No. 12/634,110, filed on Dec. 9, 2009, now Pat. No. 8,330,605.

(60) Provisional application No. 61/234,134, filed on Aug. 14, 2009.

(51) **Int. Cl.**

G06K 7/00	(2006.01)
G08C 21/00	(2006.01)
H04W 4/04	(2009.01)
G01N 33/00	(2006.01)
G08B 21/14	(2006.01)
G08B 25/12	(2006.01)
H04W 4/02	(2009.01)
H04Q 9/00	(2006.01)

(52) **U.S. Cl.**

CPC ***G01N33/0075*** (2013.01); ***G06K 7/0095*** (2013.01); ***G08B 21/14*** (2013.01); ***G08B 25/12*** (2013.01); ***G08C 21/00*** (2013.01); ***H04Q 9/00*** (2013.01); ***H04W 4/021*** (2013.01); ***H04W 4/043*** (2013.01)

(56) **References Cited**

U.S. PATENT DOCUMENTS

5,771,004	A	6/1998	Suppelsa et al.	
6,031,454	A	2/2000	Lovejoy et al.	
6,053,030	A	4/2000	Whynall et al.	
6,091,959	A *	7/2000	Souissi et al.	340/7.46
6,182,497	B1	2/2001	Krajci	
6,415,646	B1	7/2002	Kessel et al.	
6,608,559	B1 *	8/2003	Lemelson et al.	340/539.13
6,670,887	B2	12/2003	Dungan	
6,856,253	B1	2/2005	Crook	
7,071,821	B2	7/2006	Adamczyk et al.	
7,080,544	B2	7/2006	Stepanik et al.	
7,102,517	B2	9/2006	Reyes et al.	
7,126,104	B2	10/2006	Smith et al.	
7,148,803	B2	12/2006	Bandy et al.	
7,171,312	B2	1/2007	Steinthal et al.	
7,197,013	B2	3/2007	Douglas et al.	
7,259,656	B1	8/2007	Wright	
7,263,379	B1 *	8/2007	Parkulo et al.	455/521
7,302,313	B2	11/2007	Sharp et al.	
7,369,945	B2	5/2008	Miller et al.	
7,463,160	B2	12/2008	Crook	
7,515,578	B2	4/2009	Alizadeh-Shabdiz et al.	
7,528,711	B2	5/2009	Kates	
7,663,359	B2	2/2010	Li et al.	
7,737,841	B2	6/2010	Derrick et al.	
8,034,290	B1	10/2011	Skiba et al.	
8,330,605	B2 *	12/2012	Johnson et al.	340/632
8,386,164	B1	2/2013	Moses	
8,400,317	B2	3/2013	Johnson, Jr. et al.	
8,451,120	B2	5/2013	Johnson, Jr. et al.	
2002/0155622	A1 *	10/2002	Slater et al.	436/181
2003/0043073	A1	3/2003	Gray et al.	
2003/0132830	A1 *	7/2003	Dow et al.	340/5.22
2004/0120857	A1	6/2004	Smith et al.	
2004/0236547	A1	11/2004	Rappaport et al.	
2005/0001720	A1	1/2005	Mason et al.	
2005/0088299	A1	4/2005	Bandy et al.	
2005/0250440	A1	11/2005	Zhou et al.	
2007/0005267	A1	1/2007	Li	
2007/0219645	A1	9/2007	Thomas et al.	
2008/0088434	A1	4/2008	Frieder et al.	
2008/0117066	A1 *	5/2008	Kononov et al.	340/632
2008/0280565	A1	11/2008	Jevremovic et al.	
2009/0029716	A1	1/2009	Thomas	
2009/0043504	A1	2/2009	Bandyopadhyay et al.	
2010/0081411	A1	4/2010	Montenero	

FOREIGN PATENT DOCUMENTS

CN	10126987	A	7/2008
CN	101545897		9/2009
CN	201314243	Y	9/2009
CN	201340646	Y	11/2009
EP	1 235 192	A2	8/2002
JP	08-315277		11/1996

OTHER PUBLICATIONS

U.S. Appl. No. 60/941,985 Unpublished.
U.S. Appl. No. 61/023,355 Unpublished.
U.S. Appl. No. 61/057,124 Unpublished.
LDARtools.com—News around fugitive, Jul. 22, 2010, 1 pg., URL: http://www.idartools.com/News.aspx.
Gas Detecting and Monitoring Solutions for Life, 2008, vol. 7, No. 1, pp. 1-88, Industrial Scientific Corporation.
AeroScout T6 GPS Tags, Aug. 12, 2009, 1 pg., URL: http://www.aeroscout.com/content/t6gps.
AeroScout Mobile View, Aug. 12, 2009, 1 pg. URL: http://www.aeroscout.com/content/mobileview.
WiFi Tags, Sep. 28, 2009, pp. 1-2 URL: http://www.airetrak.com/wifi/wifi_tags.php.
AeroScout T3 Tags, Aug. 12, 2009, pp. 1-2, URL: http://www.aeroscount.com/content/t3.
AeroScout T5 Sensor Tabs, Aug. 12, 2009, pp. 1-2, URL: http://www.aeroscout.com/content/t5sensor.
Oil and Gas, Aug. 12, 2009, 1 pg. URL: http://www.aeroscout.com/content/energy.
Oil and Gas, Sep. 28, 2009, 1 pg., URL: http://www.rtls.se/OilGas.aspx.
Asset Visibility Solutions for Manufacturing and Logistics Real-time location and status throughout your enterprise, November 228, pp. 1-6, AeroScout, Inc.
Cisco and AeroScout Location-Based Services for Manufacturing, 2006, pp. 1-4, Cisco Systems.
Cisco Wireless Location Appliance, 2007, pp. 1-7, Cisco Systems.
iNet—How it works, Aug. 12, 2009, pp. 1-2, URL: http://www.indsci.com/inethowitworks.aspx.
iNet—Control, Aug. 12, 2009, pp. 1-3 URL: http://www.indsci.com/inetcontrol.aspx.
Inet._web.jpb, Aug. 12, 2009, 1 pg.
Webinetflow.jpb Aug. 12, 2009, 1 pg.
GasBadge Pro® Dockable Single Gas Monitor, Jun. 2007, pp. 1-2, Industrial Scientific Corp.
GasBadge Plus® Personal Single Gas Monitor, Jun. 2007, pp. 1-2, Industrial Scientific Corp.
Roseberg P.Eng, Steve, RFID in the Oilfield Location Based Services for Industrial Environments, Jun. 5, 2008, pp. 1-30, Cisco.
U.S. Office Action, dated Mar. 17, 2015, pp. 1-16, issued in U.S. Appl. No. 14/610,120, U.S. Patent and Trademark Office, Alexandria, VA.

* cited by examiner

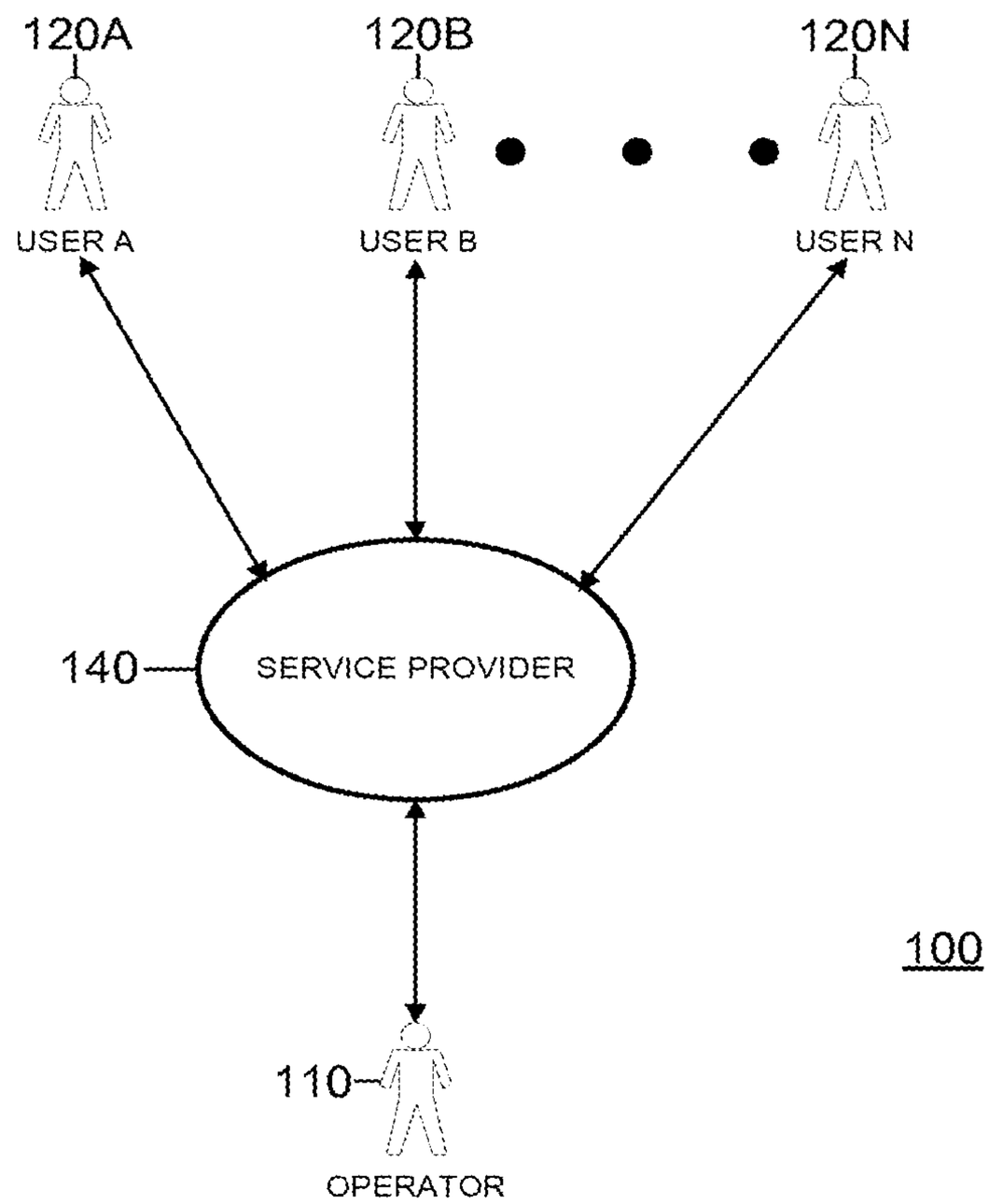
120A
120B
120N
USER A
USER B
USER N
140
SERVICE PROVIDER
100
110
OPERATOR

FIG. 1

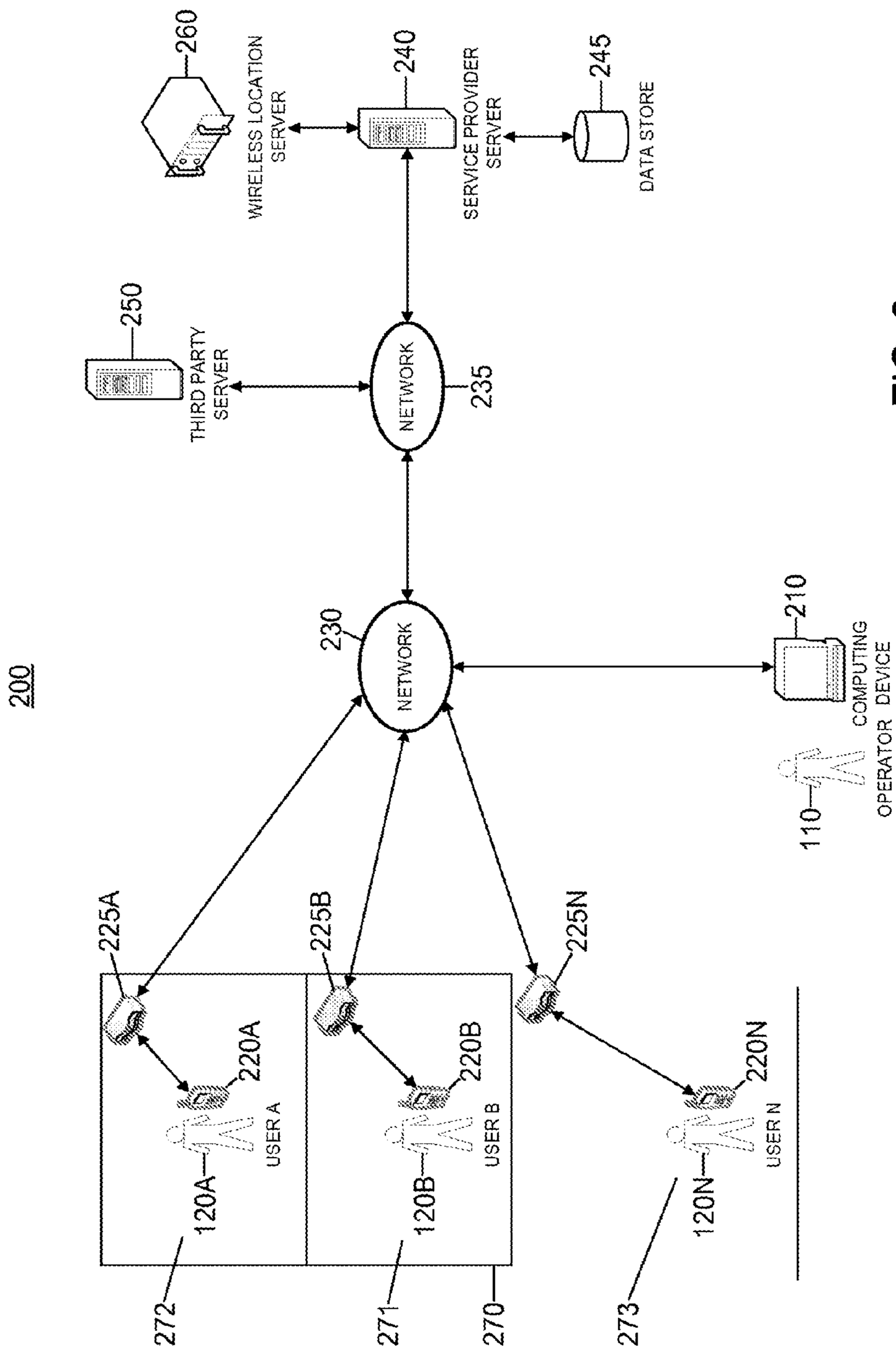
200
260
WIRELESS LOCATION SERVER
240
SERVICE PROVIDER SERVER
245
DATA STORE
250
THIRD PARTY SERVER
NETWORK
235
NETWORK
230
210
COMPUTING DEVICE
110
OPERATOR
225A
225B
225N
220A
220B
220N
USER A
USER B
USER N
120A
120B
120N
272
271
270
273

FIG. 2

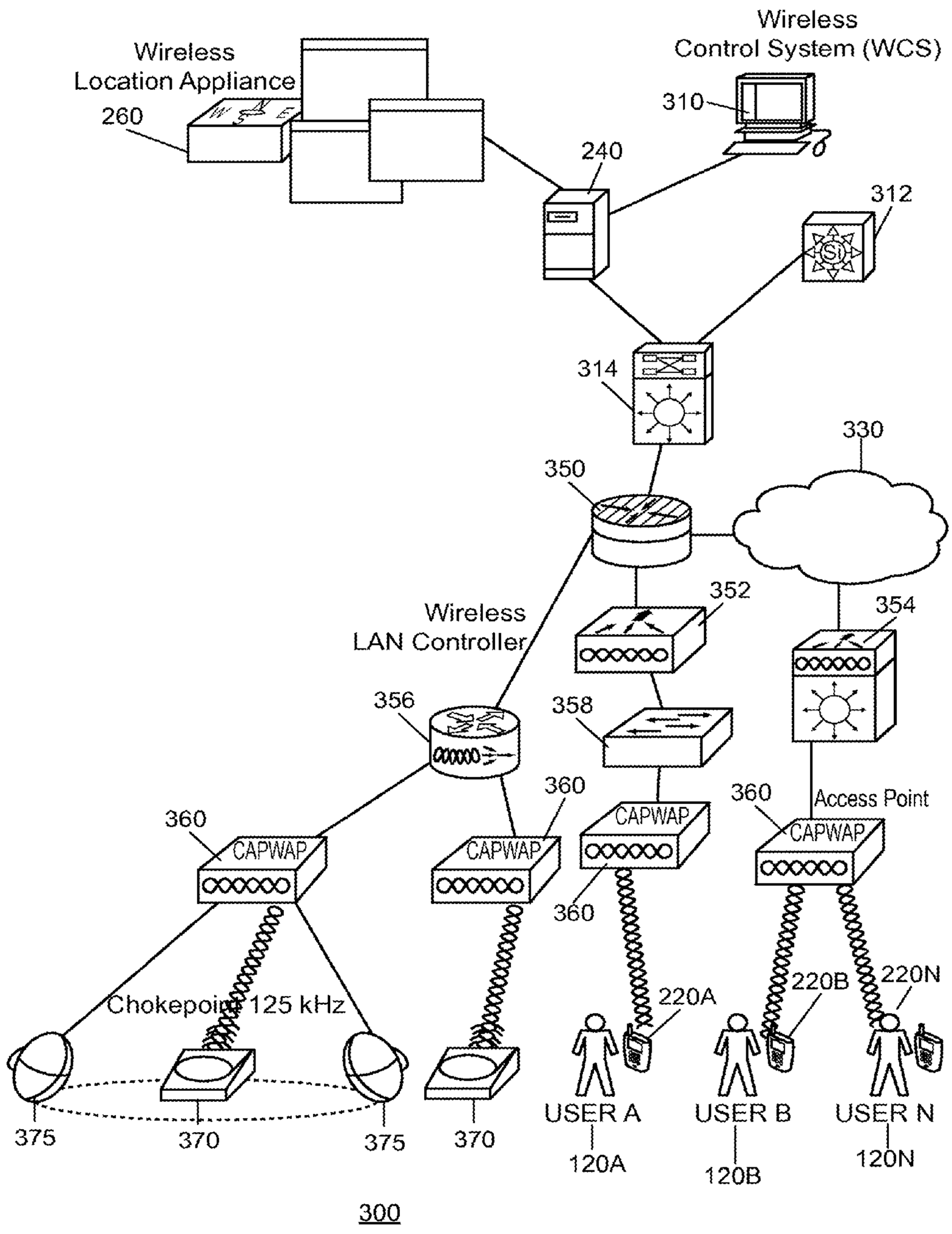
Wireless
Location Appliance
260
Wireless
Control System (WCS)
310
240
312
314
330
350
352
354
Wireless
LAN Controller
356
358
360
CAPWAP
Access Point
Chokepoint 125 kHz
220A
220B
220N
USER A
USER B
USER N
120A
120B
120N
375
370
300

FIG. 3

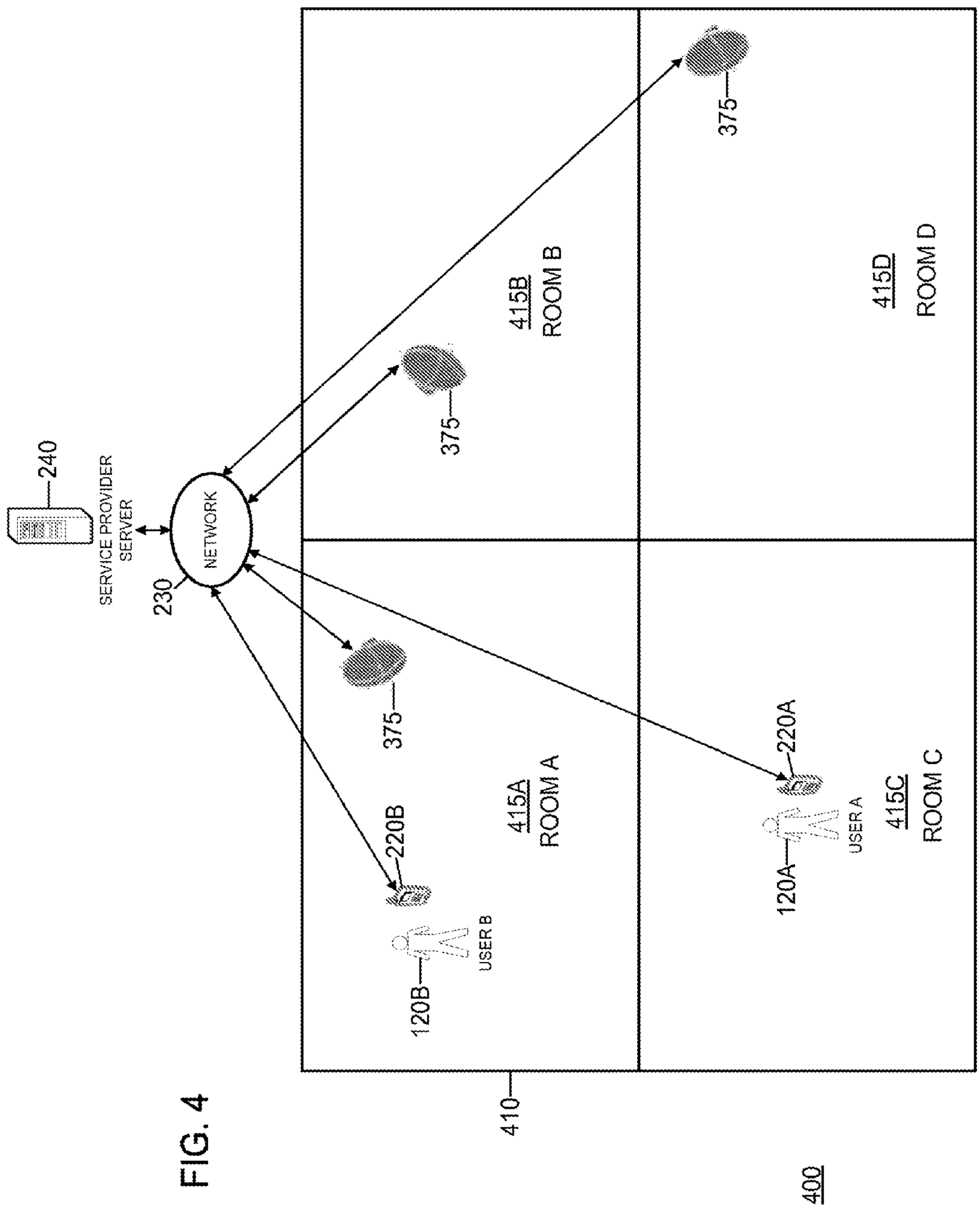
240
SERVICE PROVIDER SERVER
230
NETWORK
375
415B
ROOM B
375
415D
ROOM D
375
415A
ROOM A
220B
120B
USER B
220A
120A
USER A
415C
ROOM C
410
400

FIG. 4

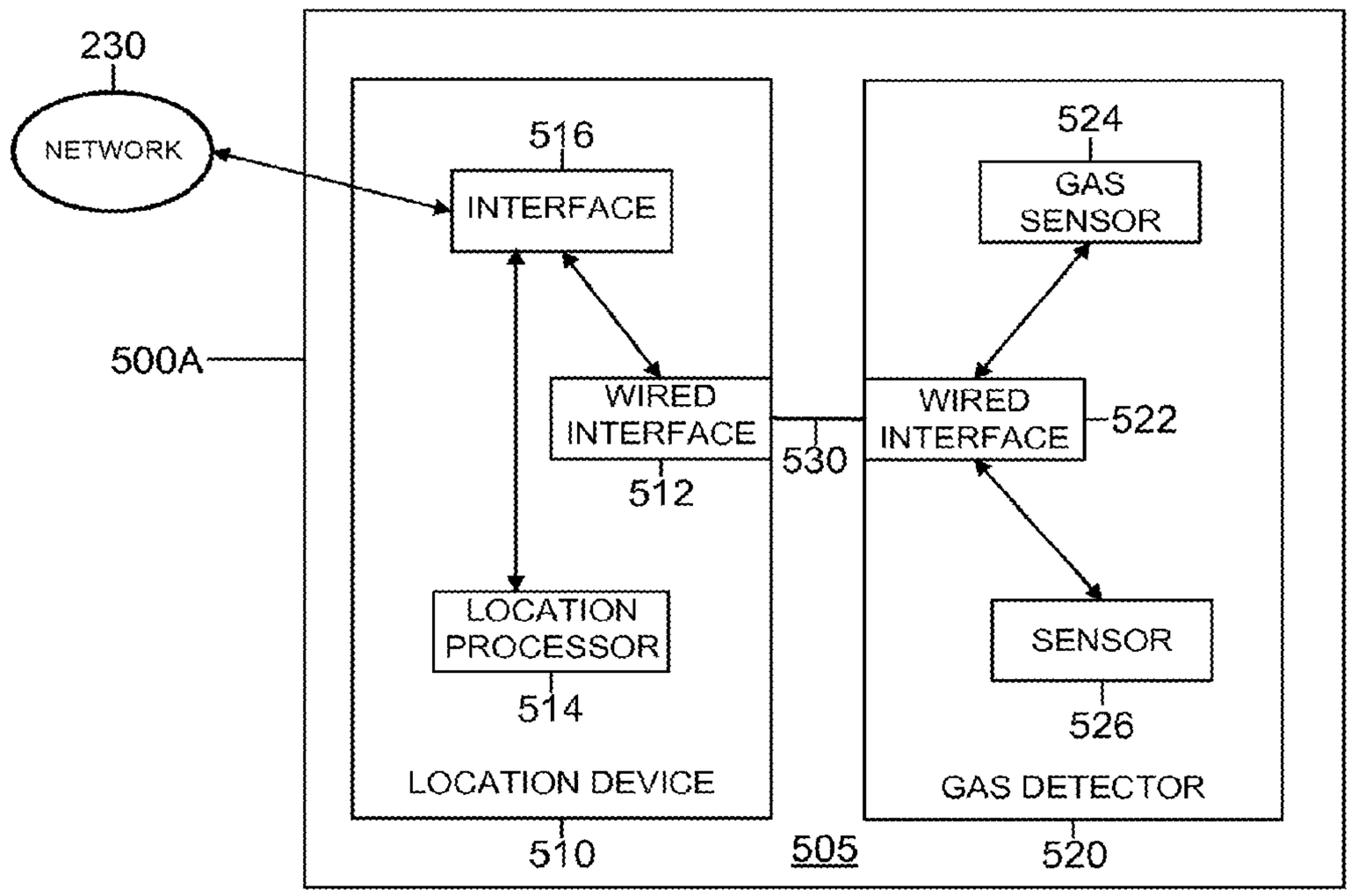
230
NETWORK
516
INTERFACE
524
GAS SENSOR
500A
WIRED INTERFACE
512
530
WIRED INTERFACE
522
LOCATION PROCESSOR
514
SENSOR
526
LOCATION DEVICE
GAS DETECTOR
510
505
520

FIG. 5A

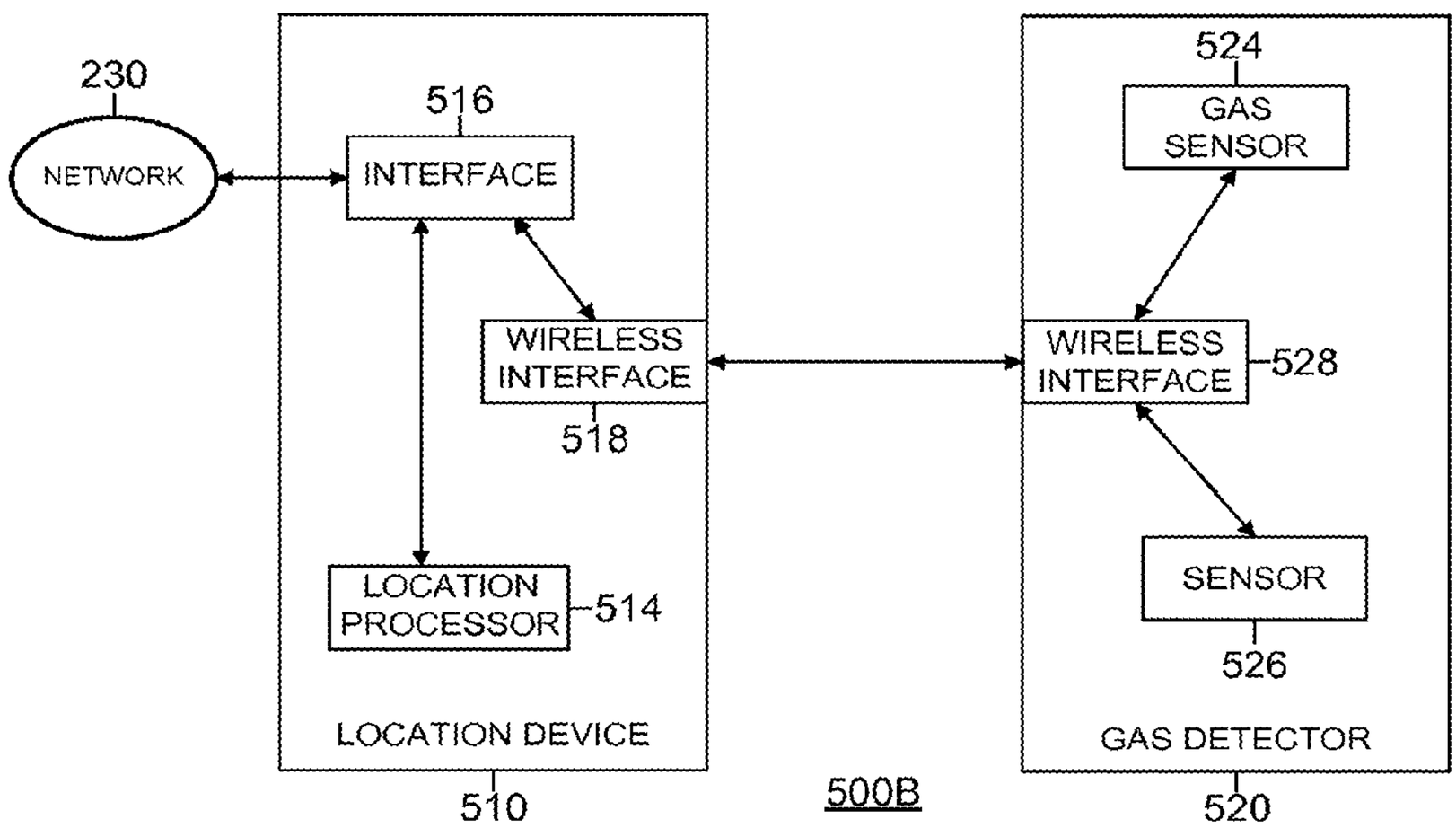
230
NETWORK
516
INTERFACE
524
GAS SENSOR
WIRELESS INTERFACE
518
WIRELESS INTERFACE
528
LOCATION PROCESSOR
514
SENSOR
526
LOCATION DEVICE
GAS DETECTOR
510
500B
520

FIG. 5B

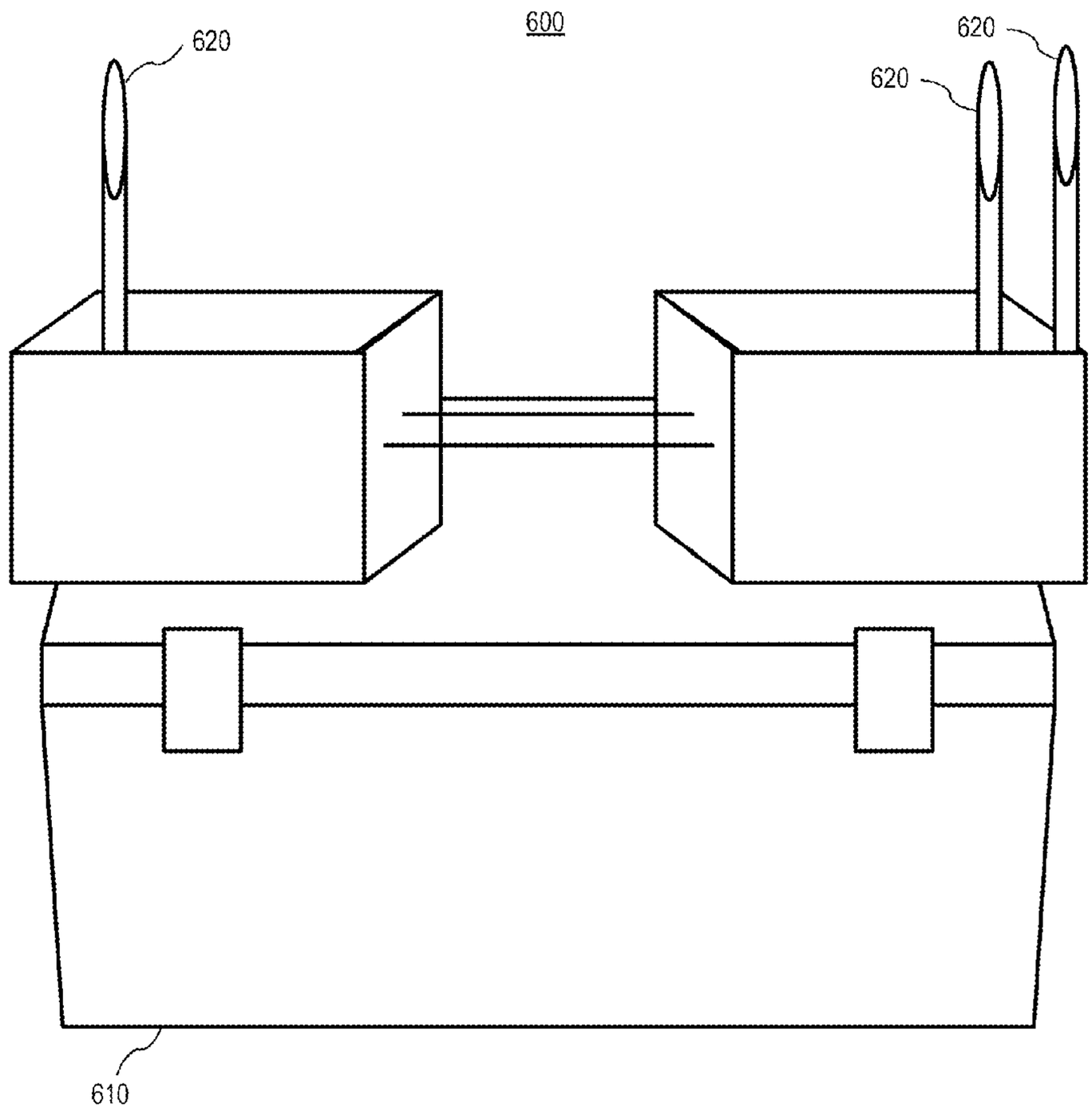

FIG. 6

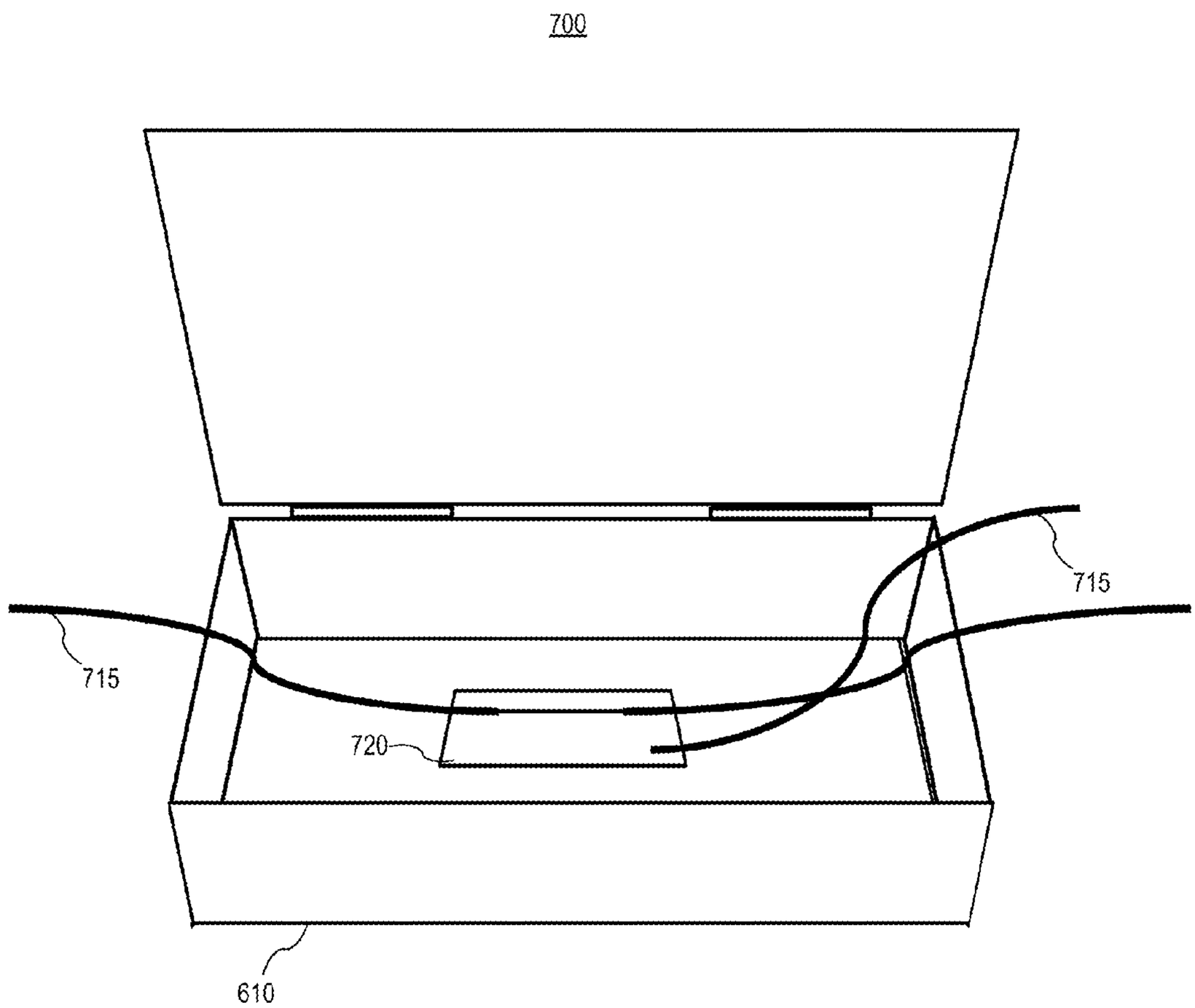

FIG. 7

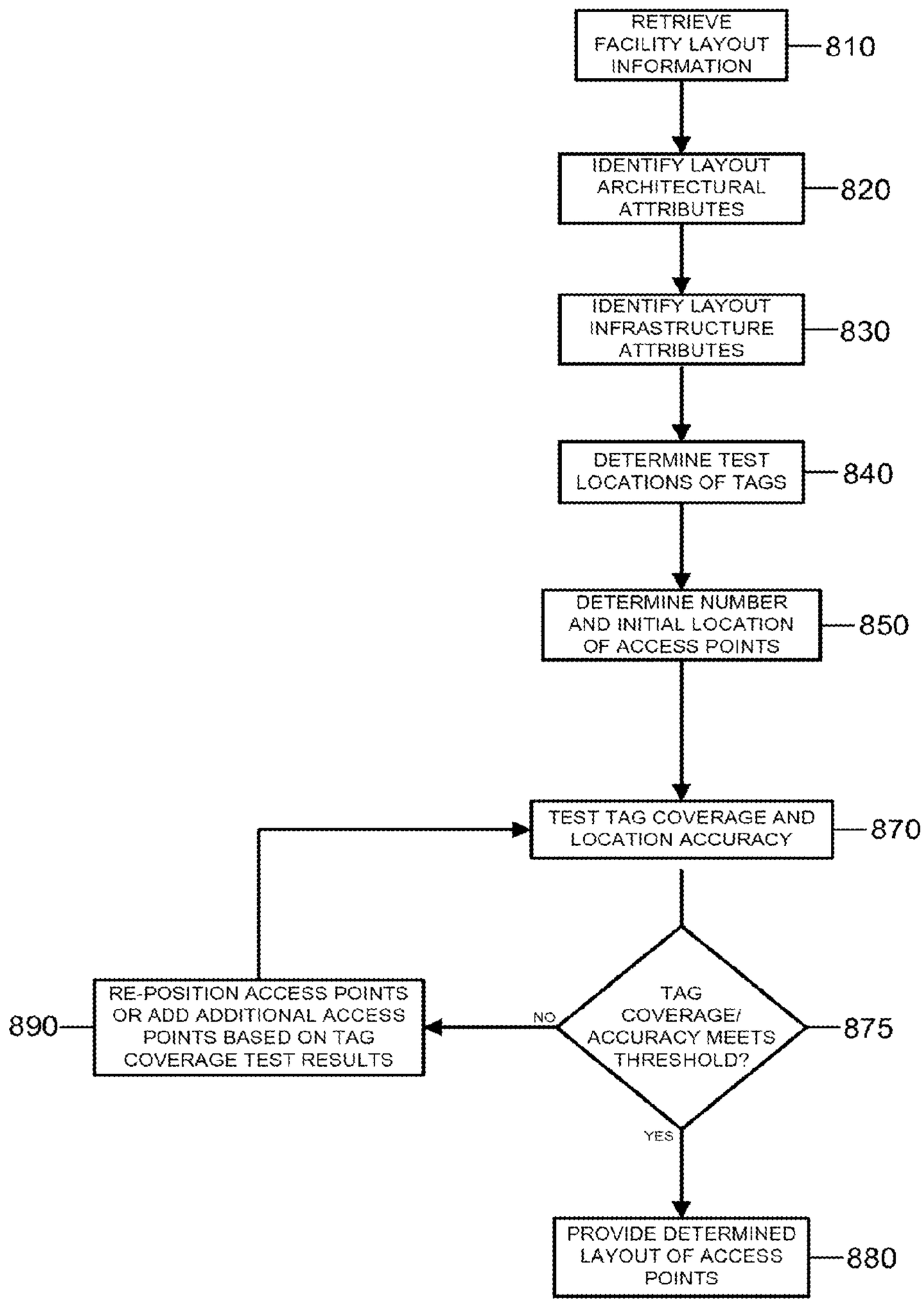
RETRIEVE FACILITY LAYOUT INFORMATION
810
IDENTIFY LAYOUT ARCHITECTURAL ATTRIBUTES
820
IDENTIFY LAYOUT INFRASTRUCTURE ATTRIBUTES
830
DETERMINE TEST LOCATIONS OF TAGS
840
DETERMINE NUMBER AND INITIAL LOCATION OF ACCESS POINTS
850
TEST TAG COVERAGE AND LOCATION ACCURACY
870
TAG COVERAGE/ ACCURACY MEETS THRESHOLD?
875
NO
YES
RE-POSITION ACCESS POINTS OR ADD ADDITIONAL ACCESS POINTS BASED ON TAG COVERAGE TEST RESULTS
890
PROVIDE DETERMINED LAYOUT OF ACCESS POINTS
880

FIG. 8

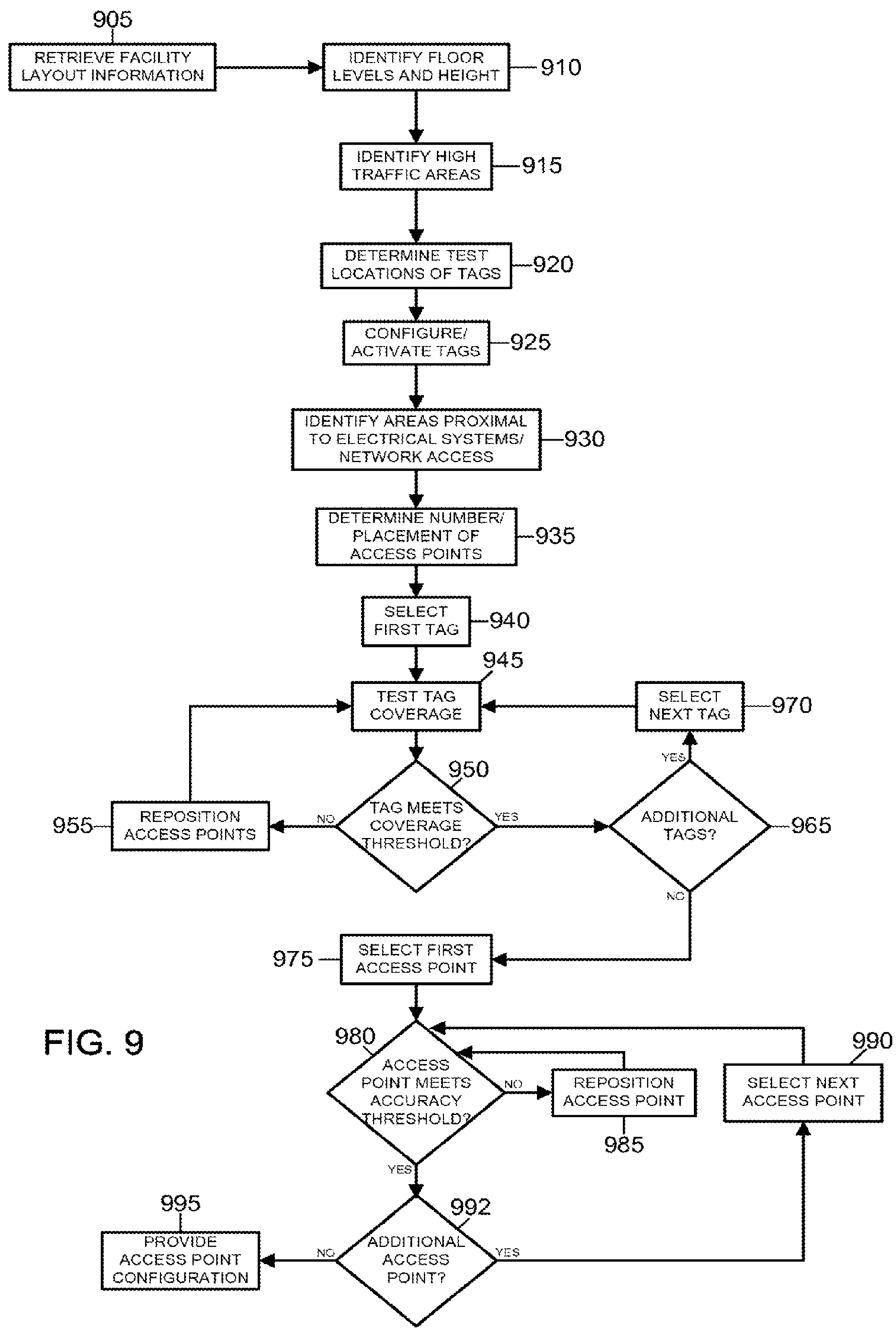
905
RETRIEVE FACILITY LAYOUT INFORMATION
IDENTIFY FLOOR LEVELS AND HEIGHT
910
IDENTIFY HIGH TRAFFIC AREAS
915
DETERMINE TEST LOCATIONS OF TAGS
920
CONFIGURE/ ACTIVATE TAGS
925
IDENTIFY AREAS PROXIMAL TO ELECTRICAL SYSTEMS/ NETWORK ACCESS
930
DETERMINE NUMBER/ PLACEMENT OF ACCESS POINTS
935
SELECT FIRST TAG
940
945
TEST TAG COVERAGE
SELECT NEXT TAG
970
YES
950
955
REPOSITION ACCESS POINTS
NO
TAG MEETS COVERAGE THRESHOLD?
YES
ADDITIONAL TAGS?
965
NO
975
SELECT FIRST ACCESS POINT
980
ACCESS POINT MEETS ACCURACY THRESHOLD?
NO
REPOSITION ACCESS POINT
985
990
SELECT NEXT ACCESS POINT
YES
995
PROVIDE ACCESS POINT CONFIGURATION
NO
992
ADDITIONAL ACCESS POINT?
YES

FIG. 9

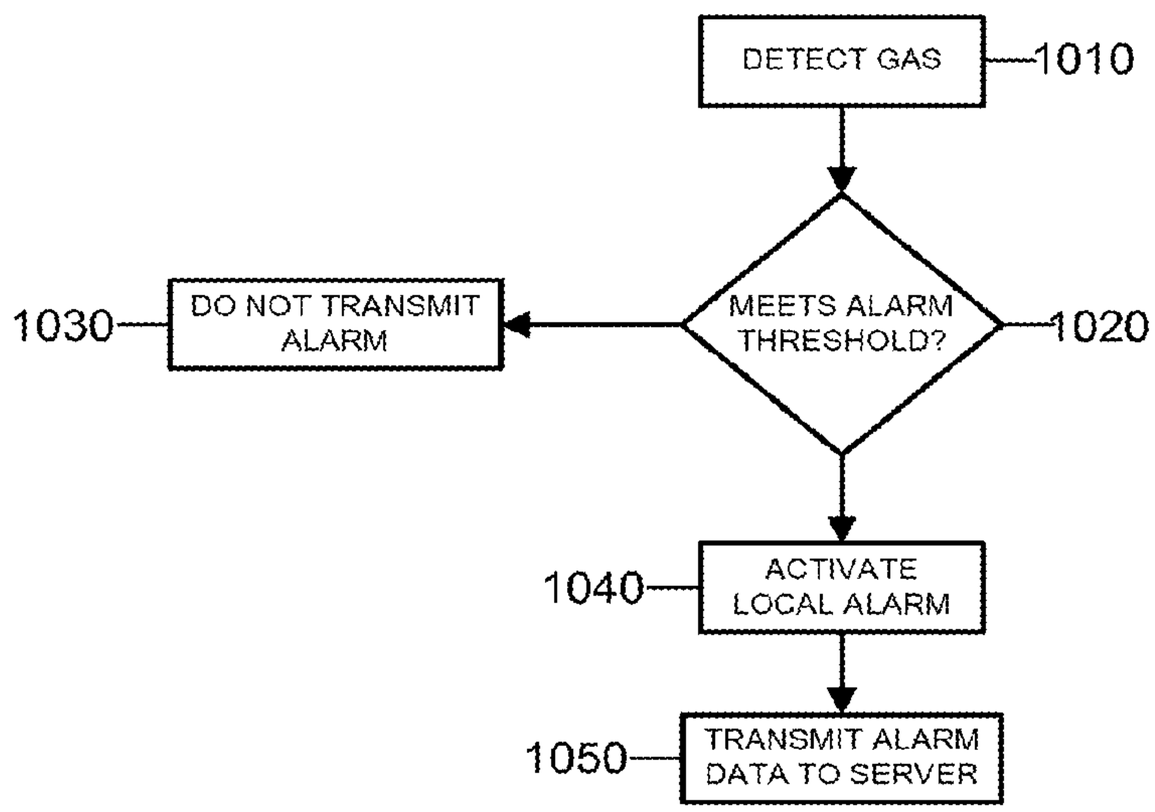

FIG. 10

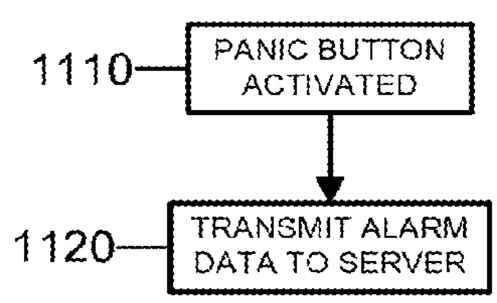

FIG. 11

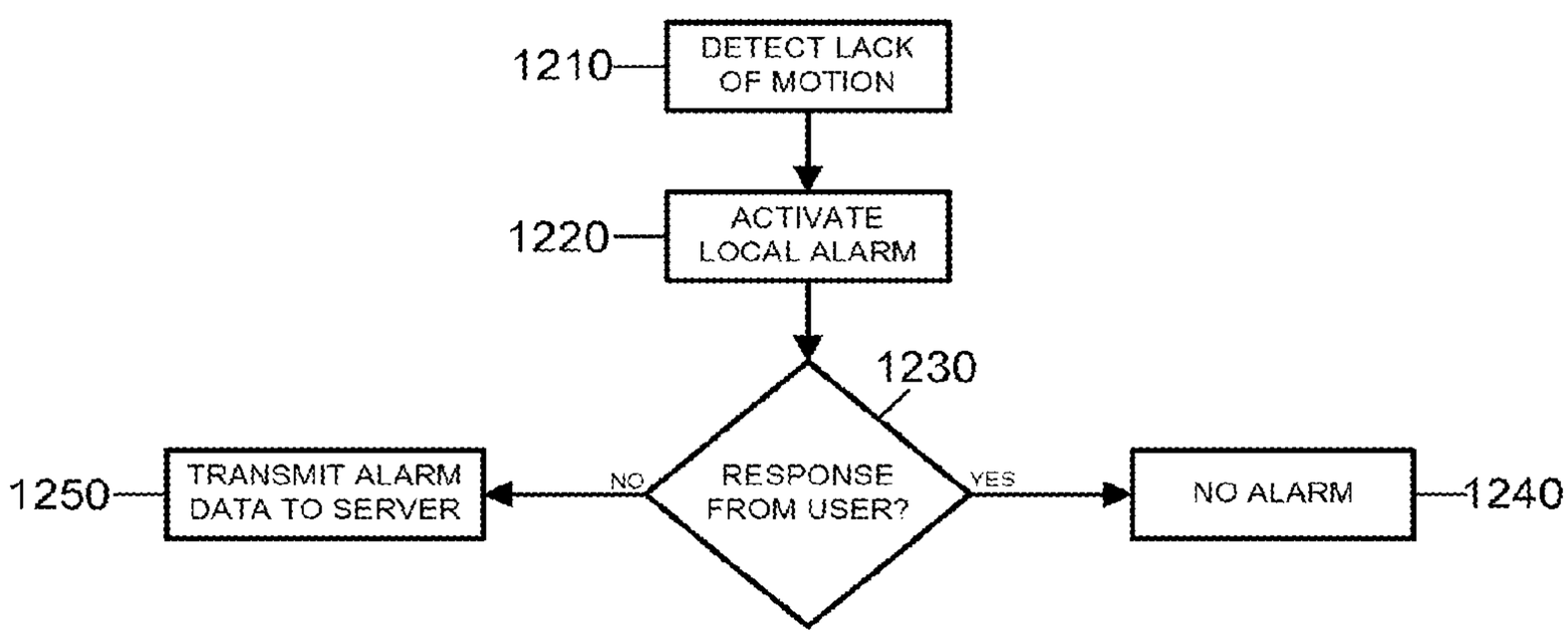

FIG. 12

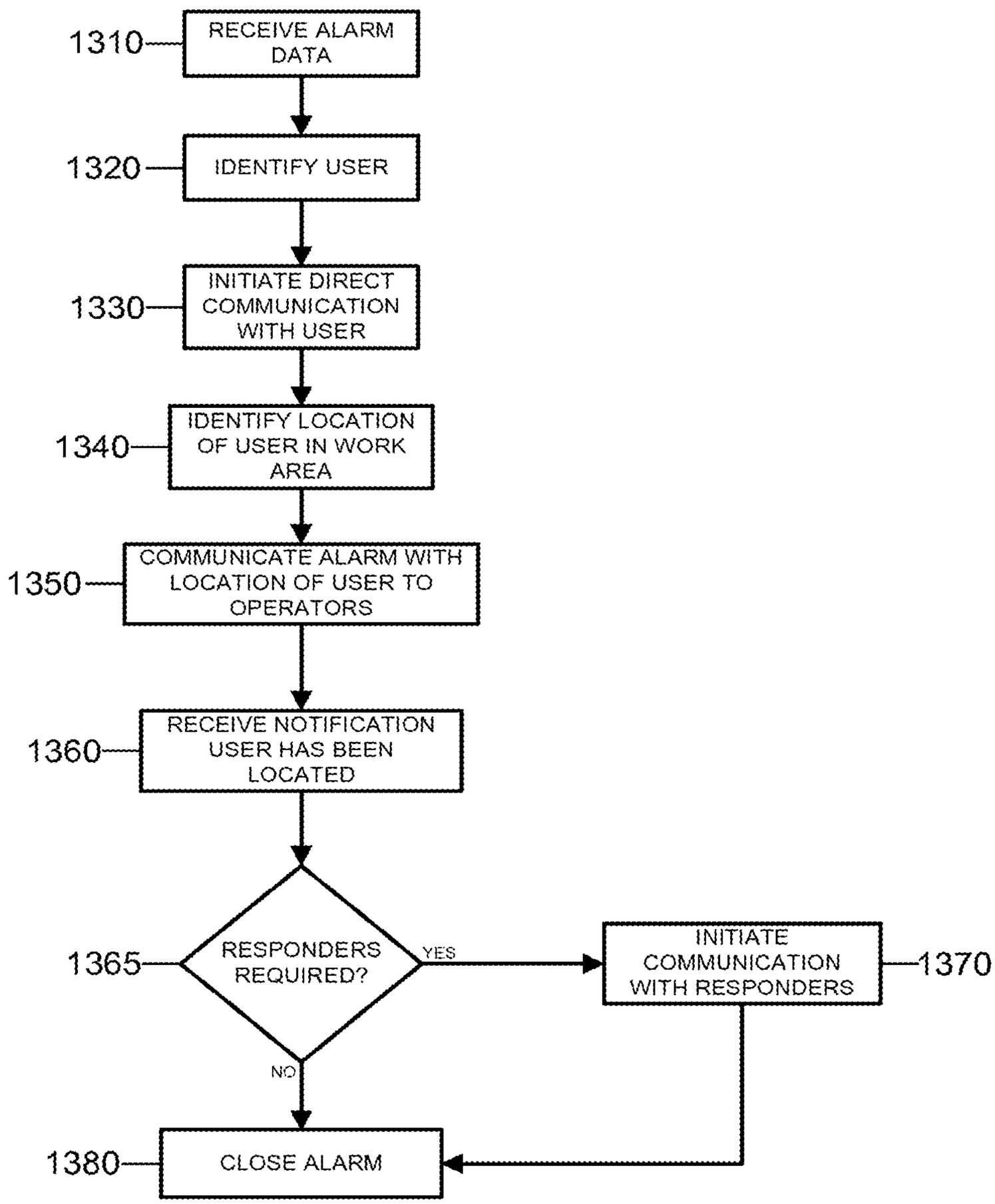
1310
RECEIVE ALARM DATA
1320
IDENTIFY USER
1330
INITIATE DIRECT COMMUNICATION WITH USER
1340
IDENTIFY LOCATION OF USER IN WORK AREA
1350
COMMUNICATE ALARM WITH LOCATION OF USER TO OPERATORS
1360
RECEIVE NOTIFICATION USER HAS BEEN LOCATED
1365
RESPONDERS REQUIRED?
YES
NO
INITIATE COMMUNICATION WITH RESPONDERS
1370
1380
CLOSE ALARM

FIG. 13

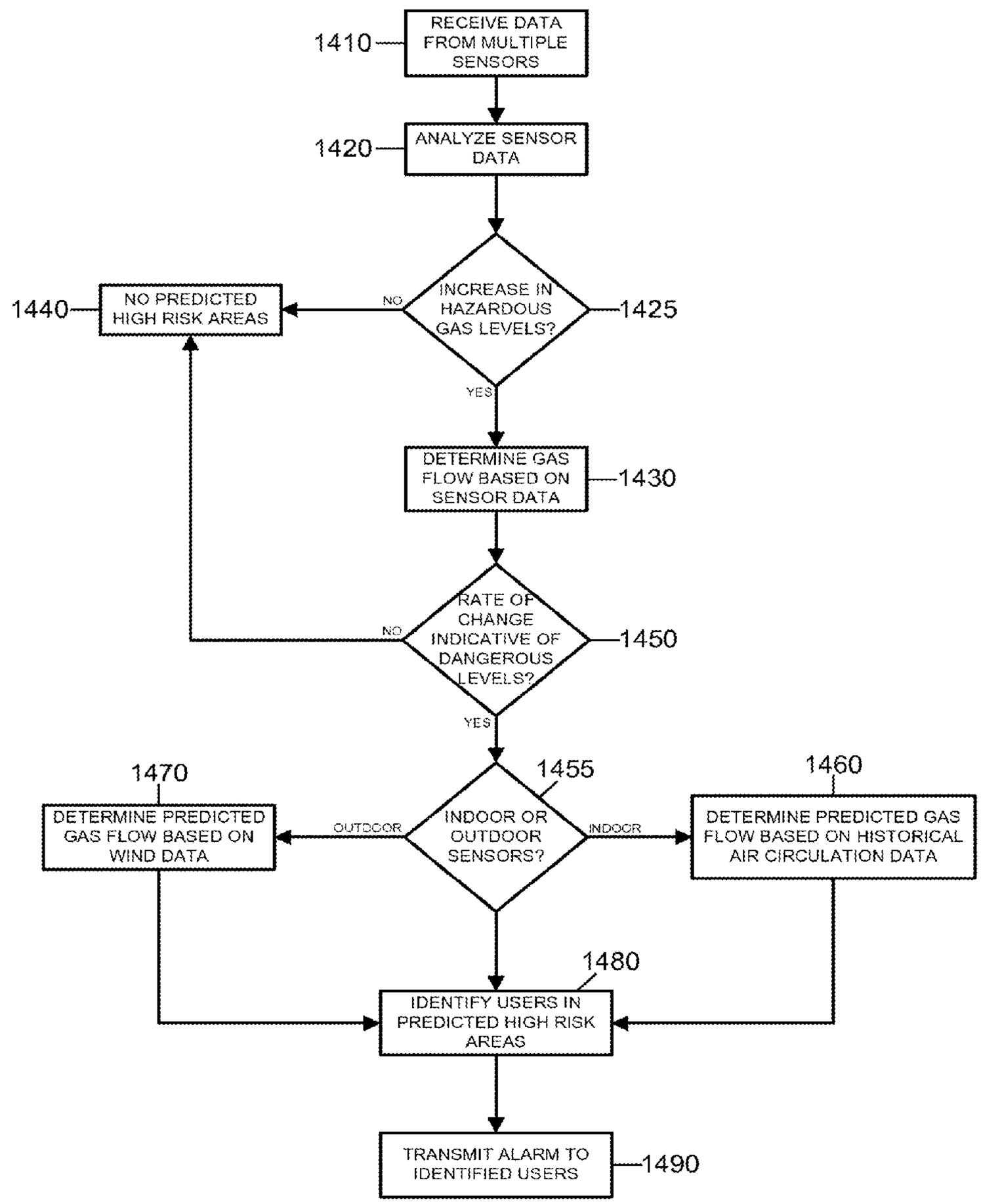
1410
RECEIVE DATA FROM MULTIPLE SENSORS
1420
ANALYZE SENSOR DATA
INCREASE IN HAZARDOUS GAS LEVELS?
1425
NO
1440
NO PREDICTED HIGH RISK AREAS
YES
DETERMINE GAS FLOW BASED ON SENSOR DATA
1430
RATE OF CHANGE INDICATIVE OF DANGEROUS LEVELS?
1450
NO
YES
1455
INDOOR OR OUTDOOR SENSORS?
OUTDOOR
INDOOR
1470
DETERMINE PREDICTED GAS FLOW BASED ON WIND DATA
1460
DETERMINE PREDICTED GAS FLOW BASED ON HISTORICAL AIR CIRCULATION DATA
1480
IDENTIFY USERS IN PREDICTED HIGH RISK AREAS
TRANSMIT ALARM TO IDENTIFIED USERS
1490

FIG. 14

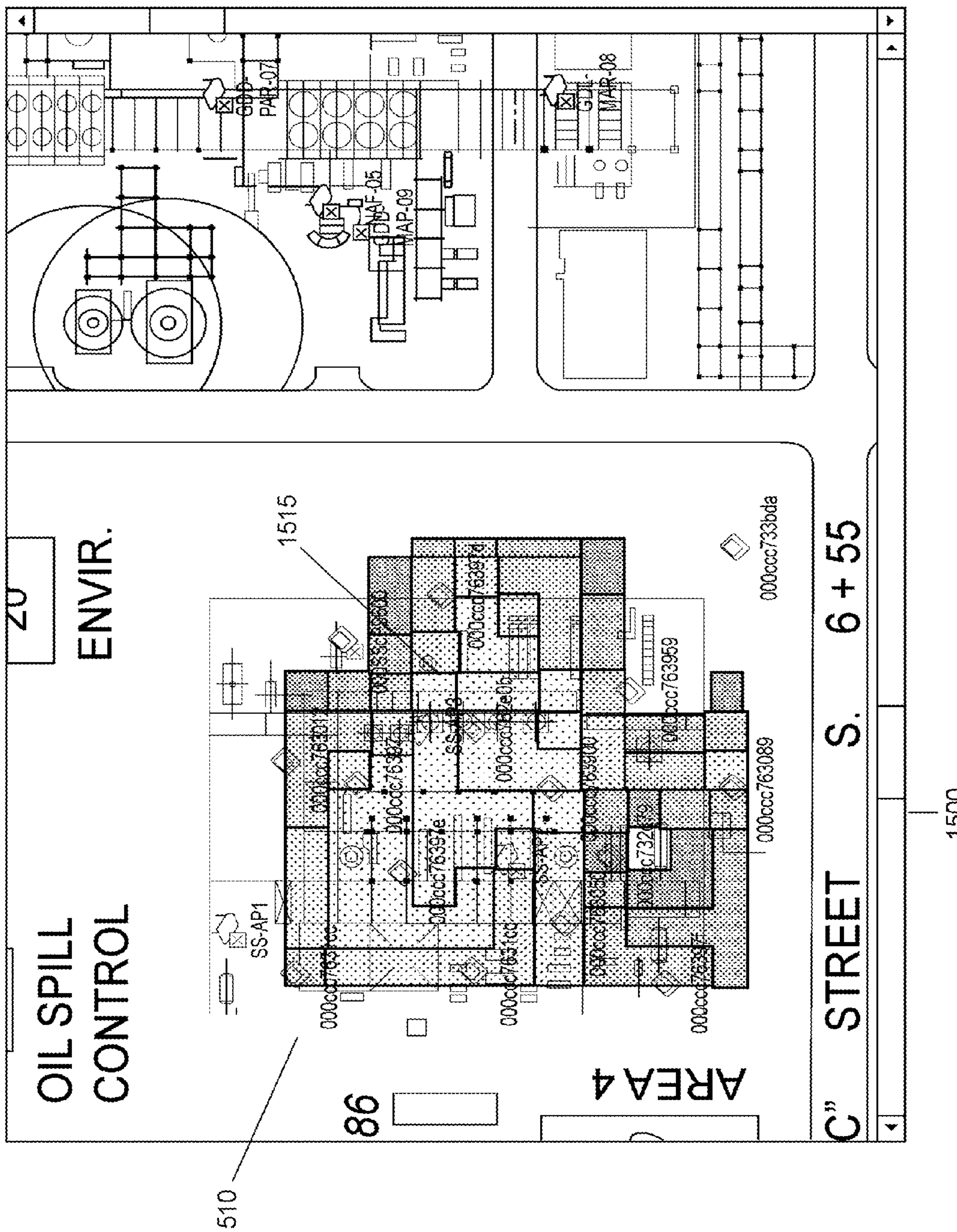
OIL SPILL
CONTROL
ENVIR.
20
86
AREA 4
"C" STREET S. 6 + 55
SS-AP1
000ccc763089
000ccc763959
000ccc733bda
PAR-07
MAR-08
1510
1515
1500

FIG. 15

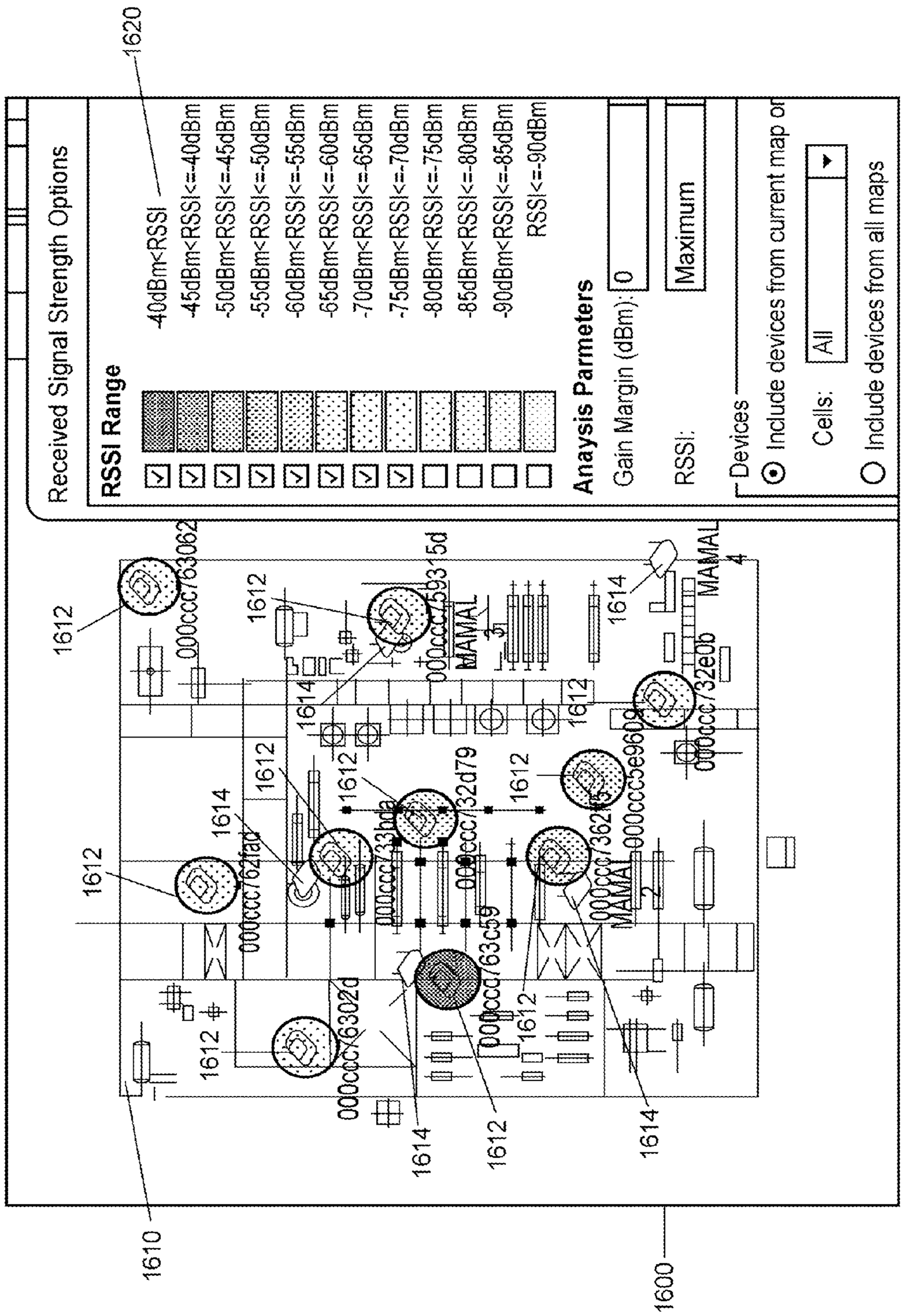
Received Signal Strength Options
RSSI Range
-40dBm<RSSI
-45dBm<RSSI<=-40dBm
-50dBm<RSSI<=-45dBm
-55dBm<RSSI<=-50dBm
-60dBm<RSSI<=-55dBm
-65dBm<RSSI<=-60dBm
-70dBm<RSSI<=-65dBm
-75dBm<RSSI<=-70dBm
-80dBm<RSSI<=-75dBm
-85dBm<RSSI<=-80dBm
-90dBm<RSSI<=-85dBm
RSSI<=-90dBm
Anaysis Parmeters
Gain Margin (dBm): 0
RSSI: Maximum
Devices
Include devices from current map or
Cells: All
Include devices from all maps
1620
1612
1614
1610
1600

FIG. 16

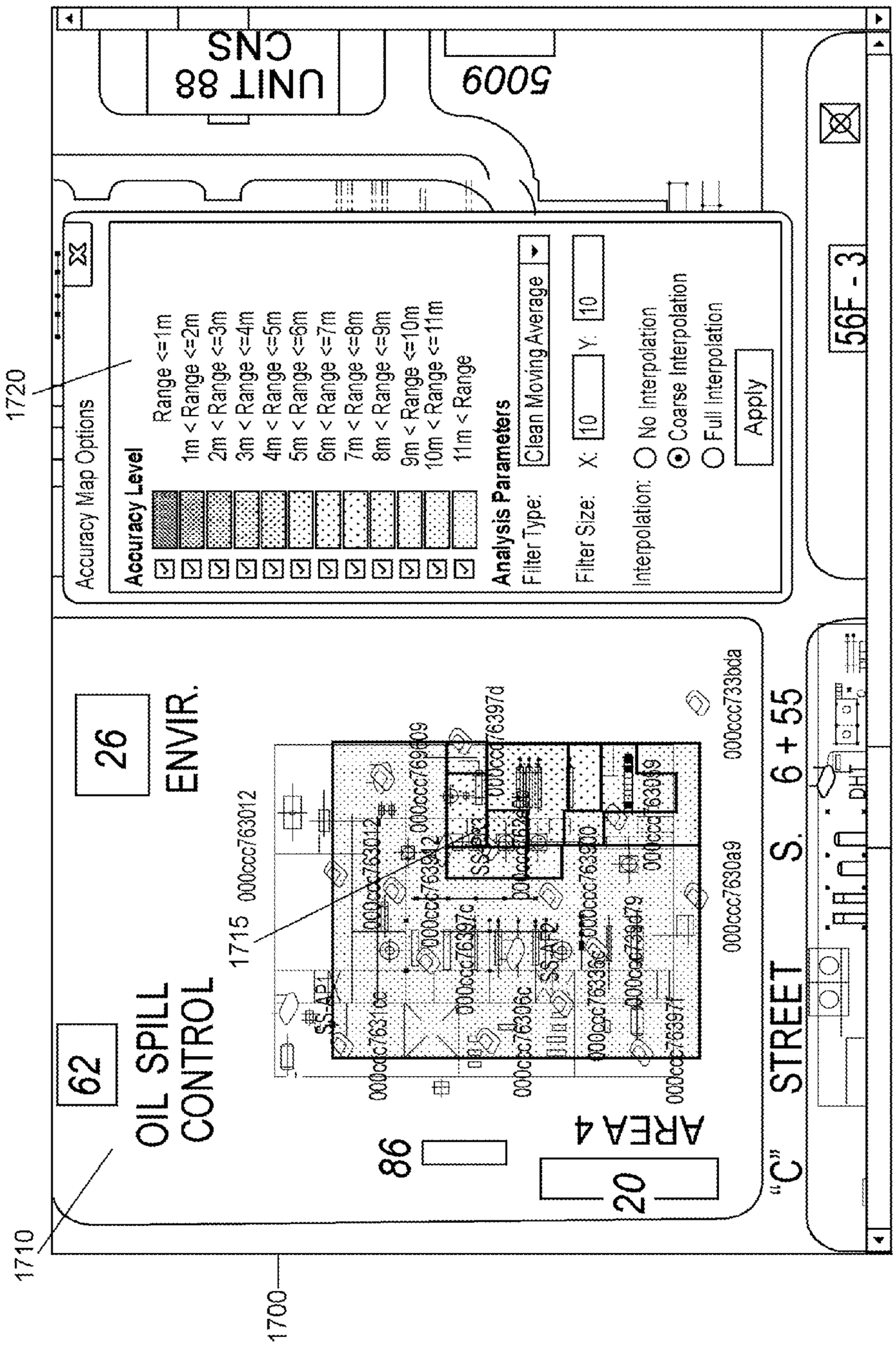
1720
Accuracy Map Options
Accuracy Level
Range <=1m
1m < Range <=2m
2m < Range <=3m
3m < Range <=4m
4m < Range <=5m
5m < Range <=6m
6m < Range <=7m
7m < Range <=8m
8m < Range <=9m
9m < Range <=10m
10m < Range <=11m
11m < Range
Analysis Parameters
Filter Type:
Clean Moving Average
Filter Size:
X: 10
Y: 10
Interpolation:
No Interpolation
Coarse Interpolation
Full Interpolation
Apply
UNIT 88
CNS
5009
56F - 3
26
ENVIR.
62
OIL SPILL
CONTROL
1715
000ccc763012
000ccc763012
000ccc763912
000ccc769909
000ccc76397d
000ccc763900
000ccc763a9
000ccc733bda
000ccc763106
000ccc76306c
000ccc763397
000ccc763306
000ccc739d79
SS-AP1
SS-AP2
86
AREA 4
20
"C"
STREET
S. 6 + 55
DHT
1710
1700

FIG. 17

1800 1805

1810	Test Number:	1
1820	Recording Title:	Penex Baseline AP 4 move to boiler- 2010_06_23
1830	AP Placement Description:	AP1 – NW corner by boiler on the ground AP2 – Center west of area next to pump room on the ground AP3 – Center of area 30 feet up on platform AP4 - NE corner in front of boiler 15 feet up
1840	Change Description:	AP 4 moved from open area north of the area's center to the NE corner by a boiler
1850	Individual AP Coverage:	AP1 – Good AP2 – Good AP3 – Great AP4 - Bad
1860	Accuracy:	41.17M
1870	Number of Tags not Covered:	5
1880	Results Description:	Accuracy of the AP placement was below the acceptable about. This was most likely due to AP 4's signal being blocked by the boiler it was placed near.
1890	Overall Coverage and Accuracy Maps:	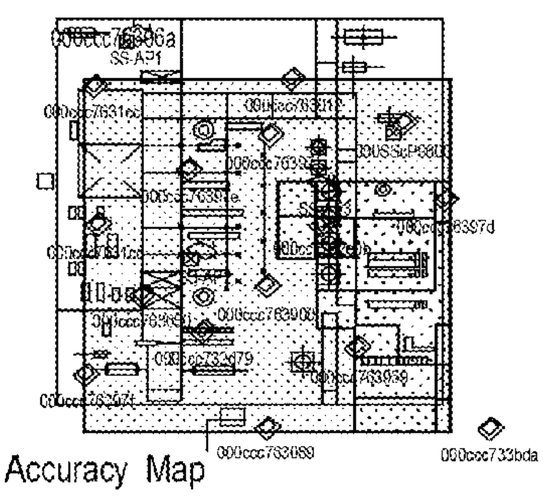 Accuracy Map 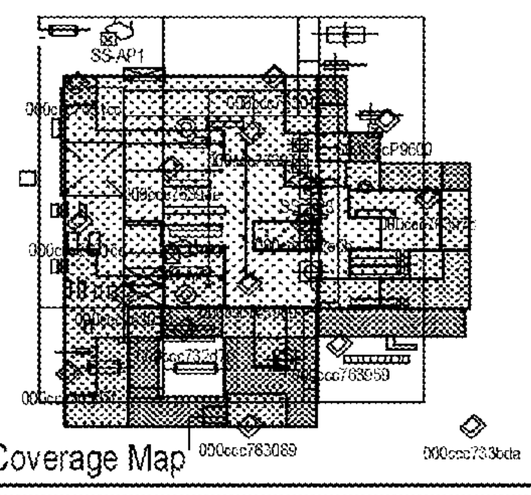 Coverage Map

FIG. 18

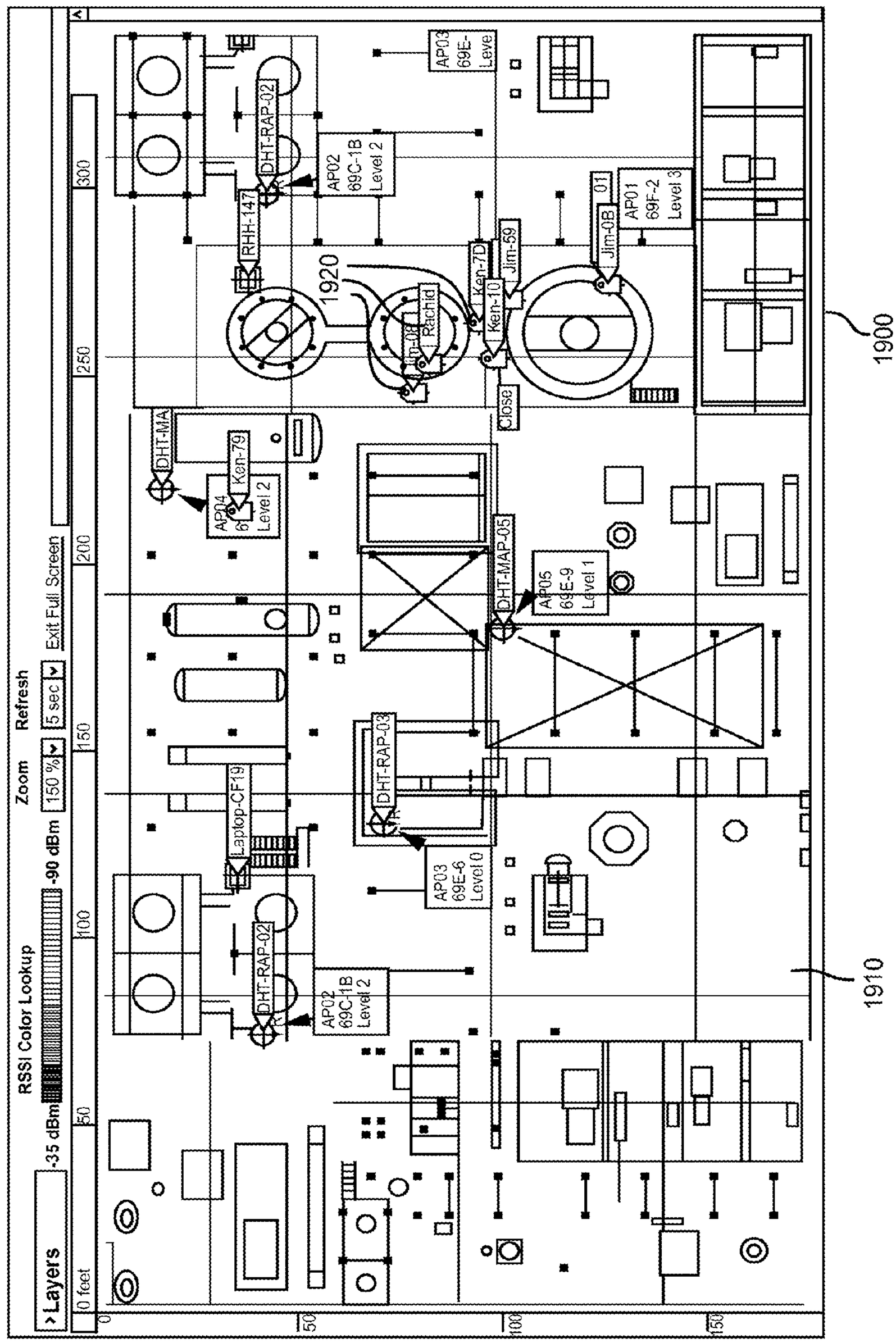
1900
1910
1920
Layers
RSSI Color Lookup
-35 dBm
-90 dBm
Zoom
150 %
Refresh
5 sec
Exit Full Screen
0 feet
50
100
150
200
250
300
DHT-RAP-02
RHH-147
AP02
69C-1B
Level 2
AP03
69E-
Leve
Ken-7D
Ken-10
Jim-69
Jim-0B
01
AP01
69F-2
Level 3
Rachid
Jim-08
Close
DHT-MA
Ken-79
AP04
Level 2
DHT-MAP-05
AP05
69E-9
Level 1
DHT-RAP-03
AP03
69E-6
Level 0
Laptop-CF19
DHT-RAP-02
AP02
69C-1B
Level 2

FIG. 19

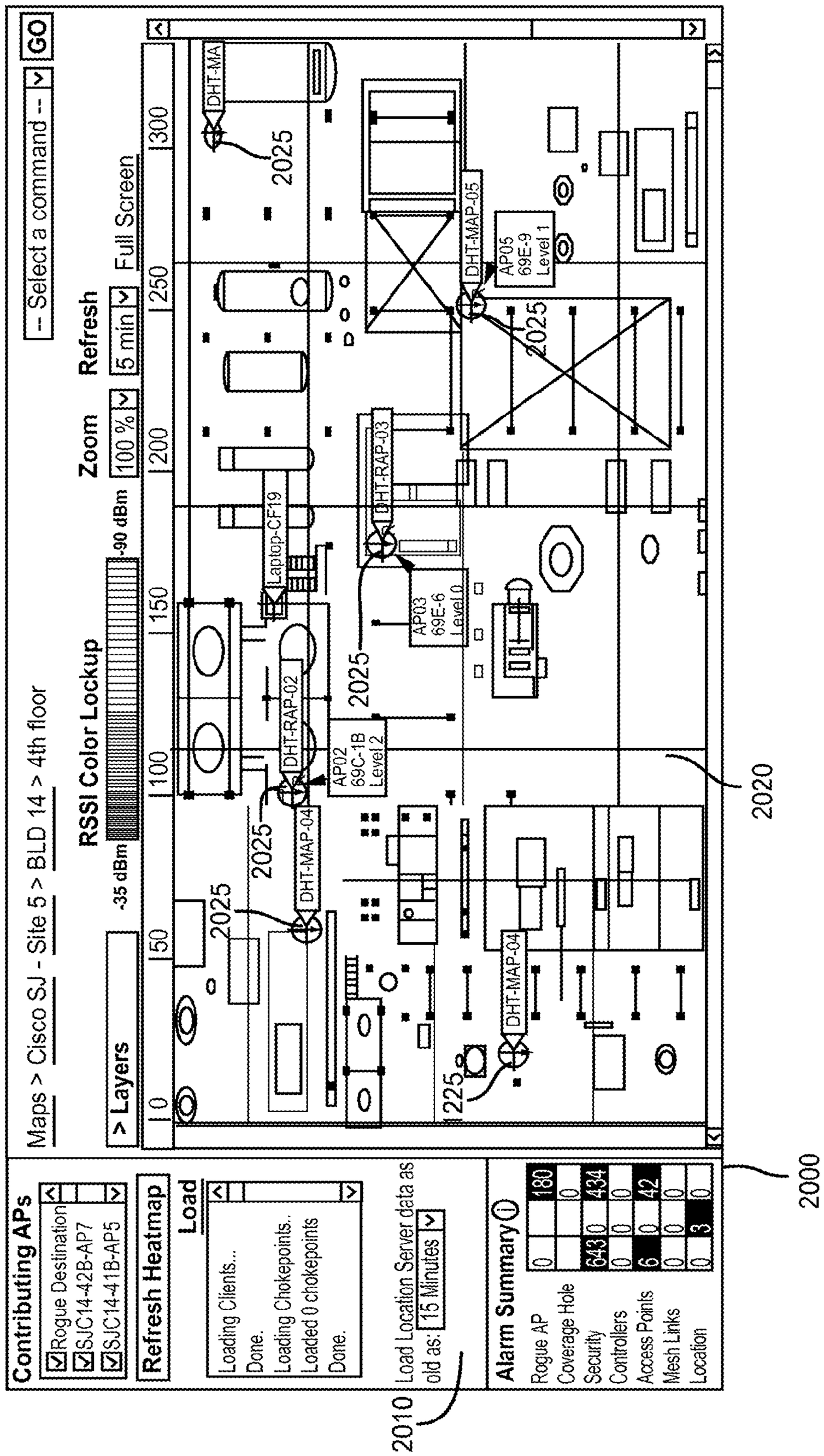
Maps > Cisco SJ - Site 5 > BLD 14 > 4th floor
-- Select a command --
GO
Zoom
100 %
Refresh
5 min
Full Screen
RSSI Color Lockup
-35 dBm
-90 dBm
> Layers
0
50
100
150
200
250
300
DHT-MA
DHT-MAP-05
AP05
69E-9
Level 1
DHT-RAP-03
AP03
69E-6
Level 0
Laptop-CF19
DHT-RAP-02
AP02
69C-1B
Level 2
DHT-MAP-04
DHT-MAP-04
2025
2020
225
Contributing APs
Rogue Destination
SJC14-42B-AP7
SJC14-41B-AP5
Refresh Heatmap
Load
Loading Clients...
Done.
Loading Chokepoints..
Loaded 0 chokepoints
Done.
Load Location Server data as old as: 15 Minutes
Alarm Summary
Rogue AP 0 180
Coverage Hole 0
Security 643 0 434
Controllers 0 0 0
Access Points 6 0 42
Mesh Links 0 0 0
Location 0 3 0
2010
2000

FIG. 20

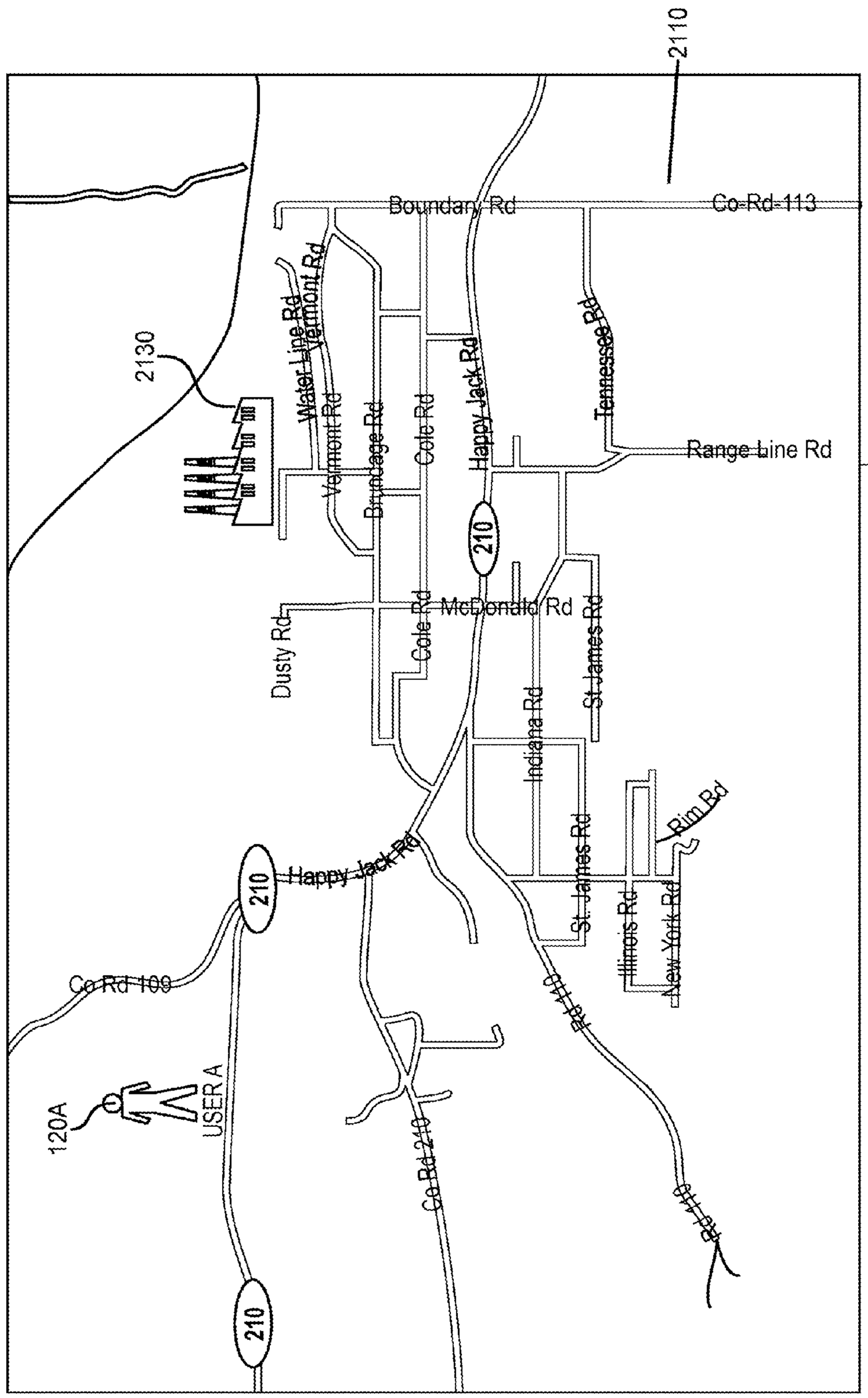
2110
Boundary Rd
Co-Rd-113
Water Line Rd
Vermont Rd
Vermont Rd
Brundage Rd
Cole Rd
Happy Jack Rd
Tennessee Rd
Range Line Rd
2130
2100
210
Dusty Rd
Cole Rd
McDonald Rd
St James Rd
Indiana Rd
St. James Rd
Rim Rd
Illinois Rd
New York Rd
210
Happy Jack Rd
Co Rd 109
Co Rd 210
120A
USER A
210

FIG. 21

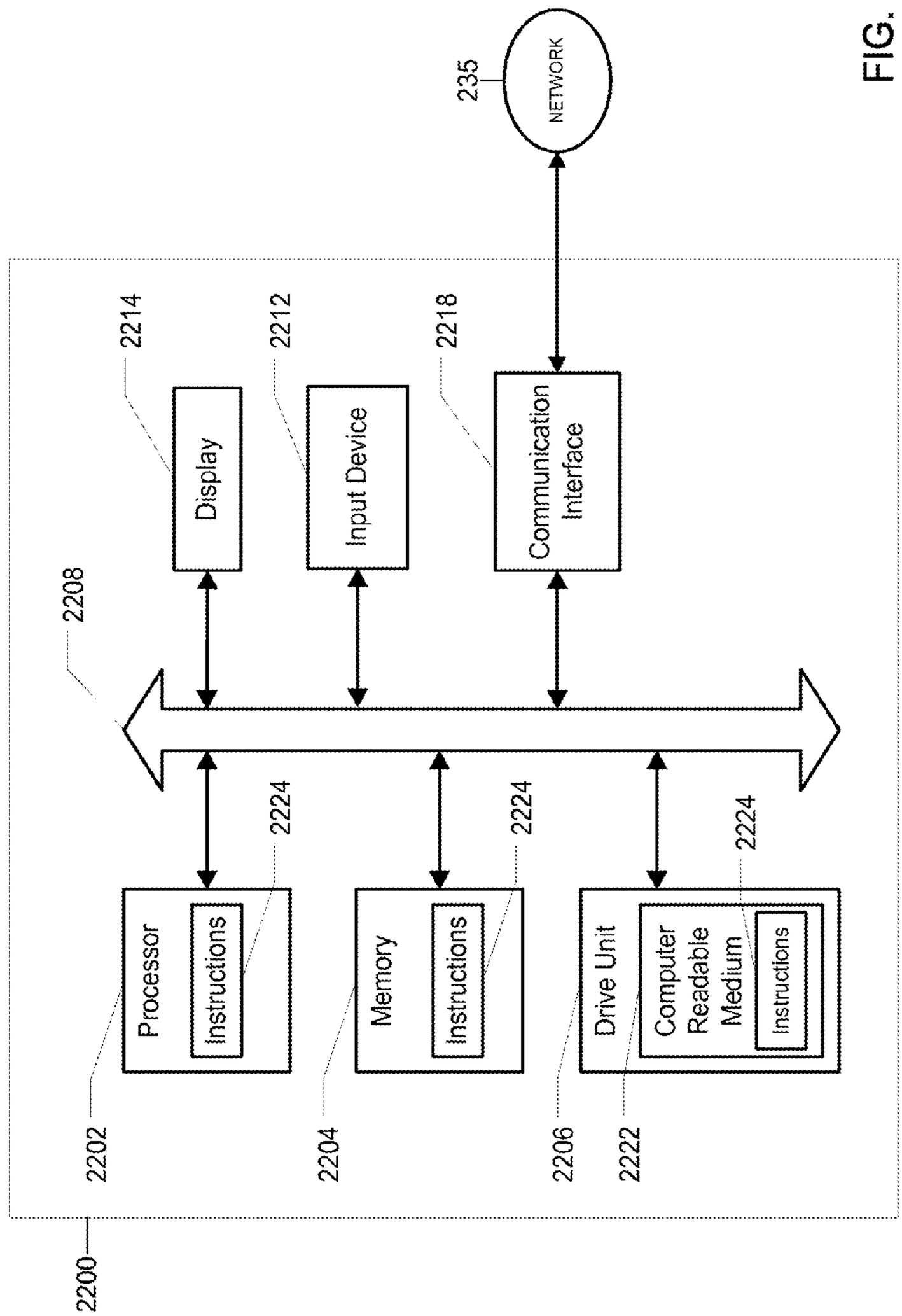
NETWORK
235
Display
2214
Input Device
2212
Communication Interface
2218
2208
Processor
Instructions
2224
Memory
Instructions
2224
Drive Unit
Computer Readable Medium
Instructions
2224
2202
2204
2206
2222
2200

FIG. 22

SYSTEM FOR PROVIDING REAL TIME LOCATING AND GAS EXPOSURE MONITORING

CROSS-REFERENCE TO RELATED APPLICATIONS

This application is a continuation of U.S. patent application Ser. No. 13/863,726, filed on Apr. 16, 2013, which is a continuation of U.S. patent application Ser. No. 12/847,718, filed Jul. 30, 2010 (now U.S. Pat. No. 8,451,120), which is a continuation-in-part of U.S. patent application Ser. No. 12/634,110, filed on Dec. 9, 2009 (now U.S. Pat. No. 8,330,605), which claims the benefit of U.S. Provisional Application No. 61/234,134, filed on Aug. 14, 2009. The entirety of U.S. patent application Ser. No. 13/863,726, U.S. patent application Ser. No. 12/847,718, U.S. Non-provisional application Ser. No. 12/634,110 and U.S. Provisional Application No. 61/234,134 are incorporated by reference herein.

TECHNICAL FIELD

The present description relates generally to a system and method, generally referred to as a system, for relative positioning of access points in a real time locating system, and more particularly, but not exclusively, to relative positioning of access points in a real time locating system which substantially maximizes coverage and accuracy.

BACKGROUND

Individuals working in hazardous environments, such as refineries, chemical plants, or nuclear power plants, may be exposed to hazardous materials, such as hazardous gases, chemical compounds, or radiation. Prolonged exposure to hazardous materials may lead to sickness or death. Thus, each individual entering a hazardous environment may be required to wear a badge containing a sensor which detects the level of exposure of the individual to the hazardous materials. The badge may alert the individual if the individual is being exposed to harmful levels of hazardous materials. When the badge alerts the individual, the individual is expected to vacate the contaminated area containing the hazardous materials, thereby reducing their exposure to the hazardous materials. However, in some instances the individual may not vacate the contaminated area and may continue to be exposed to the hazardous materials for a prolonged period of time. For example, the individual may not notice the alert, or may simply ignore the alert. The prolonged exposure to the hazardous materials may cause the individual to suffer from serious sickness or death.

SUMMARY

A system for relative positioning of access points in a real time locating system may include a memory, an interface, and a processor. The memory may be connected to the processor and the interface and may store layout information of a work area which includes architectural and infrastructure attributes of the work area. The processor may receive the layout information of the work area and determine a number of access points to position in the work area based on the architectural attributes. The processor may determine a placement in the work area of a test radio frequency tag based on the infrastructure attributes. The processor may determine a positioning of the plurality of access points in the work area which substantially maximizes a coverage and an accuracy of locating the test radio frequency tag in the work area. The processor may determine a repositioning of one of the access points when the coverage and accuracy do not satisfy a threshold. The processor may provide a graphical representation of the positioning of the access points in the work area, relative to one another, when the coverage and the accuracy satisfy the threshold.

Other systems, methods, features and advantages will be, or will become, apparent to one with skill in the art upon examination of the following figures and detailed description. It is intended that all such additional systems, methods, features and advantages be included within this description, be within the scope of the embodiments, and be protected by the following claims and be defined by the following claims. Further aspects and advantages are discussed below in conjunction with the description.

BRIEF DESCRIPTION OF THE DRAWINGS

The system and/or method may be better understood with reference to the following drawings and description. Non-limiting and non-exhaustive descriptions are described with reference to the following drawings. The components in the figures are not necessarily to scale, emphasis instead being placed upon illustrating principles. In the figures, like referenced numerals may refer to like parts throughout the different figures unless otherwise specified.

FIG. **1** is a block diagram of a general overview of a system for relative positioning of access points in a real time locating system.

FIG. **2** is a block diagram of a network environment implementing the system of FIG. **1** or other systems for relative positioning of access points in a real time locating system.

FIG. **3** is a block diagram of an exemplary network architecture implementing the system of FIG. **1** or other systems for relative positioning of access points in a real time locating system.

FIG. **4** is a block diagram of a sensor network implementing the system of FIG. **1** or other systems for relative positioning of access points in a real time locating system.

FIG. **5**A is a block diagram of an exemplary gas detection and locating device with wired components in the system of FIG. **1** or other systems for relative positioning of access points in a real time locating system.

FIG. **5**B is a block diagram of an exemplary gas detection device with wireless components in the system of FIG. **1** or other systems for relative positioning of access points in a real time locating system.

FIG. **6** is a block diagram of an exemplary mobile access point measurement and location unit in the system of FIG. **1** or other systems for relative positioning of access points in a real time locating system.

FIG. **7** is a block diagram of an exemplary mobile access point measurement and location unit in the system of FIG. **1** or other systems for relative positioning of access points in a real time locating system.

FIG. **8** is a flowchart illustrating the general operations of relative positioning of access points in the system of FIG. **1**, or other systems for relative positioning of access points in a real time locating system.

FIG. **9** is a flowchart illustrating the generation of an access point configuration in the system of FIG. **1**, or other systems for relative positioning of access points in a real time locating system.

FIG. **10** is a flowchart illustrating the detection of gas by a gas detection and locating device in the system of FIG. **1**, or other systems for relative positioning of access points in a real time locating system.

FIG. **11** is a flowchart illustrating a panic button activation by a gas detection and locating device in the system of FIG. **1**, or other systems for relative positioning of access points in a real time locating system.

FIG. **12** is a flowchart illustrating a lack of motion detection by a gas detection and locating device in the system of FIG. **1**, or other systems for relative positioning of access points in a real time locating system.

FIG. **13** is a flowchart illustrating an alarm received from a gas detection and locating device in the system of FIG. **1**, or other systems for relative positioning of access points in a real time locating system.

FIG. **14** is a flowchart illustrating high risk area prediction in the system of FIG. **1**, or other systems for relative positioning of access points in a real time locating system.

FIG. **15** is a screenshot of a user interface for viewing access point coverage of a facility in the system of FIG. **1**, or other systems for relative positioning of access points in a real time locating system.

FIG. **16** is a screenshot of a user interface for viewing access point coverage of individual access points in the system of FIG. **1**, or other systems for relative positioning of access points in a real time locating system.

FIG. **17** is a screenshot of a user interface for viewing access point locating accuracy in the system of FIG. **1**, or other systems for relative positioning of access points in a real time locating system.

FIG. **18** is a screenshot of a user interface displaying a placement analysis report in the system of FIG. **1**, or other systems for relative positioning of access points in a real time locating system.

FIG. **19** is a screenshot of a user interface for monitoring the location and gas exposure level of users in the system of FIG. **1**, or other systems for relative positioning of access points in a real time locating system.

FIG. **20** is a screenshot of a user interface for monitoring gas exposure levels in the system of FIG. **1**, or other systems for relative positioning of access points in a real time locating system.

FIG. **21** is a screenshot of a user interface for monitoring the location and gas exposure level of users using a positioning system in the system of FIG. **1**, or other systems for relative positioning of access points in a real time locating system.

FIG. **22** is an illustration of a general computer system that may be used in the systems of FIG. **2**, FIG. **3**, or other systems for relative positioning of access points in a real time locating system.

DETAILED DESCRIPTION

A system and method, generally referred to as a system, may relate to relative positioning of access points in a real time locating system, and more particularly, but not exclusively, relative positioning of access points in a real time locating system for substantially maximizing coverage and accuracy. For explanatory purposes, the detailed description discusses relative positioning of access points for a real time locating and gas exposure monitoring system. However, the system may be used for relative positioning of access points in any system for which substantially maximizing coverage and accuracy would be beneficial. The principles described herein may be embodied in many different forms.

The system may allow an organization to determine a relative positioning of access points in a work area such that the access points substantially maximize the wireless coverage and accuracy in the work area. For example, a real time locating and gas exposure monitoring system may allow an organization to monitor the location of individuals in a work area, and the level of exposure of each individual to one or more hazardous materials. However, if portions of a work area do not have comprehensive wireless coverage, the real time locating and gas exposure monitoring system may be unable to monitor individuals in the entire work area. Furthermore, the real time locating and gas exposure monitoring system may be unable to accurately locate individuals in the work area if the relative positioning of the access points does not provide for substantially accurate locating. Thus, the system for relative positioning of access points may allow an organization to substantially maximize coverage and locating accuracy of a work area.

The system may allow an organization to effectively position access points in order to improve visibility into hazardous events for individuals within a hazardous environment. An organization may use specialized wireless (WiFi) enabled gas detectors, mesh wireless access points, Real Time Location Services (RTLS), and alert monitoring systems to relay gas levels and locations of individuals to a continuously monitored control console. The control console may alert operators via audible and visual alarms indicating specific gas thresholds, a panic button, and lack of motion events. The system may allow an organization to effectively position the wireless access points based on one or more factors, such as accuracy, wireless coverage, individual safety, system reliability and cost.

The system may allow an organization to effectively position access points in order to monitor the location of each individual in a work area, and the level of exposure of each individual to one or more hazardous materials. Each individual entering the area may be provided with a gas detection and real time locating device which communicates the gas exposure and location of the individual to a server. When the gas exposure of the individual meets an alarm threshold, the system performs one or more alarm handling actions, such as locating the individual, initiating communication with the individual, alerting operators in the vicinity of the individual, initiating communication with responders, or generally any actions which may be necessary to respond to the alarm. The gas detection and real time locating device may include a panic button, which, when activated by an individual, communicates an alarm to the server. The gas detection and real time locating device may also detect when an individual fails to move for a period of time. The gas detection and real time locating device may send a local alert to the individual, such as by vibrating. If the individual does not respond to the local alert, the device may send an alarm to the server. The gas detection and real time locating device may also include additional sensors to monitor other stimuli, such as biometric sensors for monitoring heart rate, blood pressure or other health related measures.

The system may allow the organization to effectively position access points in order to quickly locate individuals exposed to harmful levels of hazardous materials and evacuate the individuals from the contaminated area. The system may allow the organization to expand their gas detection network to include each individual carrying a gas detection device in the work area. The expanded gas sensor network may provide the organization with advanced notice of gas leaks or contamination and may allow the organization to quickly evacuate the individuals located in the proximity of

the contamination. The system may use a combination of network infrastructure and satellite positioning systems to monitor the location of individuals in an indoor/outdoor work environment.

FIG. **1** provides a general overview of a system **100** for relative positioning of access points in a real time locating system. Not all of the depicted components may be required, however, and some implementations may include additional components. Variations in the arrangement and type of the components may be made without departing from the spirit or scope of the claims as set forth herein. Additional, different or fewer components may be provided.

The system **100** may include one or more users **120**A-N, an operator **110**, and a service provider **140**. The users **120**A-N may be employees of an organization who work in a hazardous work environment, such as a refinery, a nuclear power plant, a chemical plant, a mine, or any other hazardous work environment. The users **120**A-N may be exposed to harmful levels of one or more hazardous materials, such as hazardous gases, hazardous chemical compounds, or hazardous radiation while working in the hazardous work environment. The users **120**A-N may suffer from sickness or death if they are exposed to harmful levels of the hazardous materials, such as hazardous gases, chemicals and/or nuclear particles. Alternatively or in addition, the users **120**A-N may be deprived of oxygen, such as in a mine, and may suffer from sickness or death from lack of oxygen. The work environment, or work area, may include multiple structures, such as buildings, and each building may include multiple levels or floors. The work environment may further include one or more outdoor areas, and/or subterranean areas, such as a basement, tunnel or cave. The users **120**A-N may be located in any of the structures or levels within the work environment.

The service provider **140** may provide the operator **110** with access to the system **100** for relative positioning of access points to maximize wireless coverage and location accuracy. The system **100** may analyze the architectural and infrastructure attributes to determine a relative positioning of access points which substantially maximizes the wireless coverage and accuracy of the access points. Coverage may be a measure of radio frequency signal propagation throughout an area, measured by a Received Signal Strength Indicator (RSSI) value. Increased coverage may be directly correlated to more accurate location tracking. The architectural attributes of the work area may include the number of levels of the work area, the height of each level, the average amount of foot traffic in each area, the wireless frequency of the environment (and structures which may affect the wireless frequency, such as metallic or concrete objects), and generally any other attributes which are related to, or affected by, the architectural design of the work area. The infrastructure attributes may include the location of power outlets, the location of wired Ethernet outlets, such as for power over Ethernet (PoE) functionality, or generally any other attributes which may be related to, or affected by, the infrastructure of the work area. The steps of determining the relative positioning of the access points is discussed in more detail in FIGS. **8-9** below. The operator **110** may use one or more mobile access point measurement and location units (MAMALs) to test the wireless coverage and accuracy. Exemplary MAMALs are discussed in more detail in FIGS. **6** and **7** below. The service provider **140** may provide the operator **110** with one or more user interfaces for viewing the coverage and accuracy of the access points. The system **100** may also provide the operator **110** with a user interface which displays a construction estimate based on the determined number, and location, of wireless access points, and a user interface which displays the work area and the relative positioning of the access points within the work area. Exemplary user interfaces are discussed in more detail in FIGS. **15-18** below.

The users **120**A-N may each wear a gas detection and locating device, such as a badge or tag, which may include a sensor for monitoring the exposure of the users **120**A-N to the hazardous materials, such as hazardous gases or chemical compounds. The badge may include a hazardous gas sensor, a locating device, and an interface, such as a network interface. The interface may transmit data describing the amount of hazardous gas a user A **120**A has been exposed to, and the location of the user A **120**A, to a central server. The hazardous gas exposure and location data of the user A **120**A may be transmitted to the central server on a periodic basis, such as every minute. The period of time between transmissions of each user **120**A-N may be manually configurable and/or may be automatically configurable by the central server. For example, if the central server detects that a user A **120**A has entered an area with a high concentration of hazardous gases, the central server may automatically instruct the badge to transmit the gas exposure information of the user A **120**A more frequently. Alternatively or in addition, if the hazardous gas exposure of the user A **120**A is approaching dangerous levels, the central server may automatically instruct the badge to transmit the gas exposure data more frequently. For example, there may be one or more gas exposure thresholds which, when met by a user A **120**A, may cause the badge of the user A **120**A to increase the frequency of the transmissions of gas exposure information.

Alternatively or in addition, users **120**A-N in a nuclear power plant work environment may wear a radiation detector and locating device. The radiation detector and locating device may include a Geiger counter for determining the exposure of the users **120**A-N to radiation. Alternatively or in addition, users **120**A-N working in a chemical plant may wear chemical detectors and locating devices which may detect whether the users **120**A-N are being exposed to harmful levels of chemical compounds. Alternatively or in addition, users **120**A-N working in a mine may wear gas detectors and locating devices which detect whether the users **120**A-N are being exposed to enough, or too much, oxygen. In general, the sensor, or detector, worn by the users **120**A-N may be determined based on the potential hazards of the work area. The badge should be worn within a breathing zone of the user A **120**A, such as within ten inches of the nose and/or mouth of the user A **120**A.

Alternatively or in addition, the badge may function as an identification device for the user A **120**A. For example, the badge may include a radio frequency identification tag, which may communicate with one or more radio frequency readers. The readers may be in communication with one or more access points, such as doorways. Each reader may either allow or deny the user A **120**A to pass through the access point, based on the permissions associated with the radio frequency identification tag of the user A **120**A. The radio frequency identification readers may be used as supplemental location devices. That is, the readers may be in communication with the service provider server **240**, such as via the networks **230**, **235**, and may communicate the location and identification of the user A **120**A to the service provider sever **240** when the radio frequency identification tag of the user A **120**A passes by the reader. Thus, the current location of the user A **120**A may be supplemented or verified when the user A **120**A passes by one of the radio frequency identification readers.

The badge may further include a location processor, such as a positioning system processor, for determining informa-

tion describing the location of a user A **120**A and communicating the location information to the central server. The positioning processor may determine the location of the user A **120**A based on data received from a satellite, such as a global positioning system (GPS). Exemplary badges including location processors are discussed in more detail in FIGS. **5**A-B below. Alternatively or in addition, if the user A **120**A is located indoors, and the badge is not able to receive data from a satellite, the location of the user A **120**A may be identified by the network infrastructure used in the work environment. The components of the network infrastructure are discussed in more detail in FIG. **2** below. The system **100** may be capable of seamlessly switching between identifying the location of the user A **120**A through the GPS data or through the network infrastructure, thereby allowing the system **100** to track the location of the user A **120**A as they move from indoors to outdoors and vice-versa. If the user A **120**A cannot be located through the GPS data or the network infrastructure, the user A **120**A may be shown as "out of range" and may reconnect when the user A **120**A is back within range of the system **100**.

If a badge determines that a user A **120**A has been exposed to harmful levels of the hazardous gas, the badge may initiate a local alarm, such as by vibrating, flashing, or sounding an alarm, such as a beep, and may communicate an alarm to the central server including the current location of the user A **120**A and the level of gas exposure of the user A **120**A. Alternatively or in addition, the central server may determine that the user A **120**A has been exposed to harmful levels of the hazardous gases and may communicate a gas exposure alarm to the badge. Detection of harmful levels of hazardous gas by a badge is discussed in more detail in FIG. **6** below.

The badges may also include a panic button, which may be activated by a user A **120**A when the user A **120**A believes there may be a problem. When a user A **120**A activates the panic button, the badge may communicate an alarm to the central server including the location of the user A **120**A and the gas exposure of the user A **120**A. The badge may also initiate a local alarm. The activation of a panic button on a badge is discussed in more detail in FIG. **7** below.

The badge may also detect if the user A **120**A has not moved for a period of time. If the badge detects that the user A **120**A has not moved for a period of time, the badge may initiate a local alarm, such as by vibrating, flashing, or sounding a noise. The user A **120**A may cancel the lack of motion alarm by pressing a cancel button on the tag or touching their badge. If the user A **120**A does not press the cancel button within a period of time, then the badge may communicate an alarm to the central server. Alternatively or in addition, the central server may monitor the movement of the user A **120**A and may send a lack of motion alarm to the badge. An alarm related to a lack of motion of the user A **120**A may be referred to as a "man down" alarm, or alert, because the user A **120**A is presumed to be motionless.

The service provider **140** may provide an organization with the central server, referred to as the service provider server **240** in FIG. **2** below, which receives the location data items and the gas exposure data items from the badges of the users **120**A-N. Alternatively or in addition, the service provider **140** may provide the badges to the users **120**A-N. For example, the service provider **140** may be consulting organization which provides the badges, and the central server, to the organization in order to enable the organization to monitor the location and gas exposure of their employees. The service provider **140** may customize the server with vendor software for monitoring the location and gas exposure of the users **120**A-N. The user interfaces of exemplary monitoring software applications are shown in FIGS. **11-16** below.

The server may receive data transmissions from the badges which may include a location identifier identifying the location of the users **120**A-N and the gas exposure of the users **120**A-N. The location of the users **120**A-N may be determined by a positioning system on the badge, or may be determined by the network infrastructure. The location of the users **120**A-N may also include the elevation of the users **120**A-N. The location identifier may include coordinates, such longitude and latitude coordinates. The server may determine when a user A **120**A has been exposed to harmful levels of gas and may activate an alarm for the user A **120**A. Alternatively or in addition, the server may receive an alarm data item from a badge when the badge detects harmful levels of hazardous gases.

The operator **110** may be a person who operates the server provided by the service provider server **140**. Alternatively or in addition, the operator **110** may be a machine or automated process. The operator **110** may monitor the users **120**A-N and may be alerted by the server when one of the users **120**A-N is exposed to harmful levels of the hazardous gases. The operator may attempt to initiate contact with the user A **120**A, such as over a walkie-talkie or over a mobile phone. The operator **110** may also initiate communication with emergency personnel, such as responders, if necessary. Alternatively or in addition, there may be one or more operators spread throughout the workplace that may be in communication with the server, such as via a mobile device or other computing device.

In operation, when the server receives an alarm data item or initiates an alarm, such as for a user A **120**A who is exposed to harmful levels of a hazardous gas, the server may perform a series of alarm handling actions based on the received alarm data item. The alarm handling actions may include alerting the operator **110** to the alarm, attempting to open a communication channel to the user A **120**A, identifying the location of the user A **120**A in the facility, and communicate the alarm and the location of the user A **120**A to any other operators in the facility. The server may also determine whether emergency responders, such as medical personnel, are required based on the level of gas exposure of the user A **120**A, and may automatically initiate communication with the emergency responders. The reception of alarm data by the server is discussed in more detail in FIG. **9** below.

Alternatively or in addition, the service provider **140** may provide a prepackaged solution for real time locating and gas detection which may further include add-on applications. The add-on applications may include video surveillance, unified communications, asset tracking, mobile worker, fixed gas monitoring, gas cloud simulation, and/or productivity, such as worker scheduling and time card reporting. The solution may include a hardware installation template/approach which may describe a process for optimized infrastructure deployment. The solution may include a solution deployment template, which may describe a process used to quickly and accurately deploy the solution. The solution may include change management, which may describe business process changes required by the personnel in the work area, such as a plant or refinery, in order to properly use the solution. The solution may include a communication template which may describe a process used to ensure comprehensive and optimized testing. The solution may include costing model template which may describe a cost estimating model for deployment based on plant layout. The solution may include an ongoing support accelerator, which may describe the management process required for long term support. The service provider **140** may also provide ongoing validation of the

solution, such as a process for ensuring that solution/application is functioning properly over time.

Alternatively or in addition, the service provider **140** may identify a single point of contact which may include negotiated vendor contracts and defined vendor responsibilities. The service provider server **240** may also provide z-axis calibration. For example, the service provider server **240** may calibrate on the ground and may calibrate in the air.

Alternatively or in addition, the service provider **140** may provide one or more productivity process improvements. For example, the service provider **140** may provide a change maintenance process for managing volatile organic compound (VOC) emissions using wireless gas sensors. The service provider **140** may also provide a change maintenance process for managing volatile organic compound (VOC) transmissions using wireless gas sensors. The service provider **140** may provide architecture to support enterprise level work efficiencies, as existing solutions may be plant/location specific an unable to scale on their own. The service provider **140** may provide process improvements aimed at workforce/resource sharing. The service provider **140** may provide contractor accountability, such as by linking to PEOPLESOFT time and labor reporting to create automated accountability/dashboards/reconciliation and analysis.

Alternatively or in addition, the gas detection devices worn by the users **120**A-N may be used in conjunction with stationary wireless gas sensors in order to build a wireless sensor network. An exemplary wireless sensor network is discussed in more detail in FIG. **4** below. The wireless sensor network may be used to predict the movement of a hazardous gas through a work area. Predicting the movement of the hazardous gas may allow an organization to pro-actively alert the users **120**A-N to imminent danger. Using a wireless sensor network to predict the movement of hazardous gas is discussed in more detail in FIG. **10** below.

Alternatively or in addition, the service provider **140** may provide 'best process' modeling. For example, the service provider **140** may model ideal work performances physically and through video-ip camera network on a WiFi infrastructure. The service provider **140** may offer playback of the performances to workforce/contractors for safety improvements and work efficiency/quality.

FIG. **2** provides a simplified view of a network environment **200** implementing the system of FIG. **1** or other systems for relative positioning of access points in a real time locating system. Not all of the depicted components may be required, however, and some implementations may include additional components not shown in the figure. Variations in the arrangement and type of the components may be made without departing from the spirit or scope of the claims as set forth herein. Additional, different or fewer components may be provided.

The network environment **200** may include one or more users **120**A-N, gas detection and locating devices ("badges") **220**A-N, network components **225**A-N, an operator **110**, a computing device **210**, a service provider server **240**, a third party server **250**, a data store **245**, a wireless location server **260**, and networks **230**, **235**. Some or all of the service provider server **240**, the third party server **250**, and the wireless location server **260** may be in communication with each other by way of network **235**. The users **120**A-N may be located across various parts of a facility, or work area, or an organization. The users **120**A-B may be located within a structure **270**, the user A **120**A being on the second floor **272** of the structure **270**, and the user B **120**B being on the first floor **271** of the structure **270**. The user N **120**N may be outdoors **273**.

The networks **230**, **235** may include wide area networks (WAN), such as the Internet, local area networks (LAN), metropolitan area networks, or any other networks that may allow for data communication. The network **230** may include the Internet and may include all or part of network **235**; network **235** may include all or part of network **230**. The networks **230**, **235** may be divided into sub-networks. The sub-networks may allow access to all of the other components connected to the networks **230**, **235** in the system **200**, or the sub-networks may restrict access between the components connected to the networks **230**, **235**. The network **235** may be regarded as a public or private network connection and may include, for example, a virtual private network or an encryption or other security mechanism employed over the public Internet, or the like.

The badges **220**A-N may be gas detection and locating devices, such as those shown in FIGS. **5**A-B below. The badges **220**A-N may include a sensor, such as for detecting gas, and a communication interface, such as to communicate over the networks **230**, **235**. The sensors may be automatically synchronized by the service provider server **240**.

Alternatively or in addition, the users **120**A-N may receive the badges **220**A-N when they are entering a hazardous work area. In this example, the service provider server **240** may scan an identification badge of a user A **120**A, such as by bar code or by radio frequency identification, and may then scan a badge **220**A. The badge **220**A may then be associated with the user A **120**A, and the user A **120**A may use the badge **220**A while in the hazardous work area. When the user A **120**A leaves the hazardous work area, they may return the badge **220**A and the badge **220**A may be unassociated with the user A **120**A. For example, the user A **120**A may dock the badge **220**A into a charger. Upon docking the badge **220**A into the charger, the service provider server **240** may remove the association between the badge **220**A and the user A **120**A. The badge **220**A may then be associated with any of the users **120**A-N who enters the hazardous work area. Alternatively or in addition, the service provider server **240** may also retrieve any sensor data stored on the badge **220**A prior to removing the association from the user A **120**A.

The badges **220**A-N may communicate over the networks **230**, **235** via the network components **225**A-N. Each of the network components **225**A-N may represent one or more wireless routers, wired routers, switches, controllers, or generally any network components which may be used to provide communications over the networks **230**, **235**. For example, the network components **225**A-N may be CISCO AIRONET Access Points and/or CISCO Wireless LAN Controllers. The network components **225**A-N may be capable of identifying the location of the badges **220**A-N and communicating the location of the badges to the service provider server **240**. In the example where the network components **225**A-N are access points, the access points may be strategically placed throughout the facility **270** and/or work area to ensure the entire area of the facility and/or work place is within range of one of the access points. The user N **120**N located outdoors **273** may be out of the range of the wireless network, and may communicate with the service provider server **240** via cellular telephone towers. Alternatively, the location of the user N **120**N, or the users **120**A-B may be determined based on triangulating signals received by cellular telephone towers, third party location services, such as GOOGLE LATITUDE™, or generally any mechanism for determining the location of the user N **120**N. Alternatively or in addition, the user N **120**N located outdoors **273** may be located remotely from the work area. In this example, the badge **220**N may communicate with the service provider server **240** via a sat-

ellite data connection. Alternatively or in addition, the location of the user N **120**N may be tracked based on a satellite positioning system, such as the global positioning system (GPS).

The service provider server **240** may include one or more of the following: an application server, a mobile application server, a data store, a database server, and a middleware server. The service provider server **240** may exist on one machine or may be running in a distributed configuration on one or more machines. The service provider server **240**, the computing device **210**, the badges **220**A-N, and the wireless location server **260** may be one or more computing devices of various kinds, such as the computing device in FIG. **22**. Such computing devices may generally include any device that may be configured to perform computation and that may be capable of sending and receiving data communications by way of one or more wired and/or wireless communication interfaces. Such devices may be configured to communicate in accordance with any of a variety of network protocols, including but not limited to protocols within the Transmission Control Protocol/Internet Protocol (TCP/IP) protocol suite. For example, the computing device **210** may employ the Hypertext Transfer Protocol ("HTTP") to request information, such as a web page, from a web server, which may be a process executing on the service provider server **240**.

There may be several configurations of database servers, application servers, mobile application servers, and middleware applications included in the service provider server **240**. The data store **245** may be part of the service provider server **240** and may be a database server, such as MICROSOFT SQL SERVER®, ORACLE®, IBM DB2®, SQLITE®, or any other database software, relational or otherwise. The application server may be APACHE TOMCAT®, MICROSOFT IIS®, ADOBE COLDFUSION®, or any other application server that supports communication protocols.

The third party server **250** may be a server which provides external data or services to the service provider server **240**. For example, the third party server **250** may be part of an emergency response system. The service provider server **240** may request emergency assistance for a user A **120**A by communicating with the third party server **250**. Alternatively or in addition, the service provider server **240** may provide services or information to the service provider server **240**. For example, the third party server **250** may belong to a neighboring business. The service provider server **240** may notify the third party server **250** of gas leaks, such as gas clouds, which may affect the geographical location of the neighboring business based on data received from the badges **220**A-N or other gas sensors.

The wireless location server **260** may be a network component capable of identifying the location of the badges **220**A-N, and consequently, the location of the users **120**A-N. The wireless location server **260** may utilize information received from the network components **225**A-N, and/or the badges **220**A-N, to determine the location of the users **120**A-N. For example, the wireless location server **260** may be a CISCO WIRELESS LOCATION APPLIANCE.

The networks **230**, **235** may be configured to couple one computing device, such as the badges **220**A-N, to another computing device, such as the service provider server **240**, to enable communication of data between the devices. The networks **230**, **235** may generally be enabled to employ any form of machine-readable media for communicating information from one device to another. Each of networks **230**, **235** may include one or more of a wireless network, a wired network, a local area network (LAN), a wide area network (WAN), a direct connection such as through a Universal Serial Bus (USB) port, and the like, and may include the set of interconnected networks that make up the Internet. If wireless the networks **230**, **235** may be cellular telephone networks, 802.11, 802.16, 802.20, or WiMax networks, or generally any wireless network. The networks **230**, **235** may include any communication method by which information may travel between computing devices.

The operator **110** may utilize the computing device **110** to monitor the location and the gas exposure of the users **120**A-N. The computing device **110** may be configured to run one or more computing applications, such as AEROSCOUT MOBILE VIEW, CISCO WIRELESS CONTROL SYSTEM (WCS) NAVIGATOR or INDUSTRIAL SCIENTIFIC INET CONTROL. The computing applications may assist the operator **110** with monitoring the location and gas exposure of the users **120**A-N. The computing applications may utilize Simple Object Access Protocol/Extensible Markup Language (SOAP/XML) application programming interfaces (API) to communicate data with one another. For example, the AEROSCOUT MOBILE VIEW computing application may retrieve data describing the location of the users **120**A-N from the CISCO WIRELESS CONTROL SYSTEM using one or more SOAP/XML APIs.

The operator **110** and the computing device **210** may be located within the work area of the organization. Alternatively or in addition, the operator **110** and computing device **210** may be located external to the work area, such as within a remote monitoring facility. The remote monitoring facility may monitor the gas exposure and location of users **120**A-N in multiple work areas of multiple organizations. The computing device **210** may provide the operator **110** with access to various applications, such as Cisco™ Wireless Controller System (WCS) version 6.0.132.0, Cisco™ Mobility Services Engine version 6.0.85.0, AeroScout™ Mobileview System Manager version 3.2 (MSE 6.0), AeroScout™ Mobileview Analyzer version 1.5, Secure Copy™ WwinSCP version 4.2.7, and/or AeroScout™ Tag Manager version 4.02.22.

In operation, a gas sensor in a badge A **220**A may detect the level of exposure of a user A **120**A to one or more hazardous gases. The badge A **220**A may communicate the amount of gas exposure of the user A **120**A, and the location of the user A **120**A, to the service provider server **240** on a periodic basis. The location of the user A **120**A may be determined based on a positioning system, such as a global positioning system (GPS). Alternatively or in addition, if the users **120**A-B are located indoors, or the location information can otherwise not be retrieved from a positioning system, the location information may be determined by the network infrastructure. In this example, the wireless location server **260** may determine the location of a user A **120**A, such as by triangulating the wireless data signal from the badge A **220**A to the network components **225**A-N, and may communicate the location of the user A **120**A to the service provider server **240**. Alternatively, the network components **225**A-N may include a radio frequency (RF) reader and may detect the location of the badges **220**A-N by triangulating a radio frequency (RF) received from the badges **220**A-N.

If the badge A **220**A detects that the user A **120**A has been exposed to a harmful level of a hazardous gas, the badge A **220**A may communicate an alarm to the service provider server **240**. The alarm may include the amount of gas the user A **120**A has been exposed to and the location of the user A **120**A. There may be multiple levels of alarms depending upon the determined danger of the user A **120**A. For example, if the user A **120**A is not responding to a lack of motion alarm,

then an emergency alarm may be issued. However, if the user A **120**A is entering a potentially dangerous area, then a warning alarm may be initiated.

The service provider server **240** may receive the alarm data, may transmit an automatic confirmation back to the badge A **120**A confirming receipt of the alarm, and may perform one or more alarm response actions based on the alarm data. For example, the service provider server **240** may attempt to initiate communication with the user A **120**A, may communicate the alarm to an operator **110** in close proximity of the user A **120**A, or, depending on the level of gas exposure, may contact emergency response personnel. The alarm response actions of the service provider server **240** are discussed in more detail in FIG. **9** below.

Alternatively or in addition, the service provider server **240** may monitor the gas exposure information received from the gas detection and locating devices **225**A-N and other gas detection devices. The service provider server **240** may analyze the received data to determine areas where the gas level may be dangerously high. If the service provider server **240** detects a user A **120**A entering one of the dangerous areas, the service provider server **240** may automatically transmit an alarm to the gas detection and locating device of the user A **120**A.

Alternatively or in addition, a plant performance solution, such as ACCENTURE PLANT PERFORMANCE SOLUTION, may be used as an overarching graphical user interface which may be used by the management of the organization. The plant performance solution may be running on the service provider server **240** and/or the computing device **210**. The plant performance solution may provide overall plant performance management, such as a heat map display of the alarms. Alternatively or in addition, the service provider server **240** may provide a new graphical user interface depending upon a gap assessment.

Alternatively or in addition, the service provider server **240** may perform one or more analytics on the data collected from the gas detection and locating devices **220**A-N and other sensors in the work area. For example, the service provider server **240** may predict high risk work events by integrating the received data with real-time historical/unit level data. Based on the analyzed data, the service provider server **240** may provide proactive alerts to the users **120**A-N, managers and/or operators. The service provider server **240** may correlate gas releases to unplanned processes for historical analysis, may plan for future events and may continuously improve the system **100**. Generally, the service provider server **240** may maintain historical data gathered from the gas detection and locating devices **220**A-N and other sensors to identify trends, such as exposure levels per area, exposure levels per user, or generally any trends.

Alternatively or in addition, the network environment **200** may be tested on a periodic basis, such as each month, to ensure the entire system **100** is operating properly. The network environment **200** may further include additional sensors, such as wireless magnetic temperature sensors, which are in communication with the service provider server **240**, such as via the networks **230**, **235**. Alternatively or in addition, the data received from the gas detection and locating devices **225**A-N and/or other sensors, referred to as telemetry data, may be integrated into MSE. Alternatively or in addition, the system **100** and/or one or more components of the network environment **200** may be integrated into DCS.

Alternatively or in addition, there may be multiple operators **110** operating multiple computing devices **210**. In this example the service provider server **240** may determine the proper operator **110** for receiving each alarm, such as based on geographic location, language spoken, or other factors.

Alternatively or in addition, the network environment **200** may further include supplemental tags for assistance with determined dead spots. A dead spot may be a location where there is no gas detection or no wireless infrastructure. Alternatively or in addition, the service provider server **240** may include the Experion DCS which may be used for alarming of either gas sensor based alarms of alarms initiate by the activation of the panic button.

Alternatively or in addition, each alarm may indicate the reason for the alarm on both the gas detection and locating devices **220**A-N and the computing device **210** of the operator **110**. The alarm on the gas detection and locating devices may include an audible tone which may differ for each type of alarm.

FIG. **3** is a block diagram of an exemplary network architecture **300** implementing the system of FIG. **1** or other systems for relative positioning of access points in a real time locating system. Not all of the depicted components may be required, however, and some implementations may include additional components not shown in the figure. Variations in the arrangement and type of the components may be made without departing from the spirit or scope of the claims as set forth herein. Additional, different or fewer components may be provided.

The network architecture **300** may include a wireless location server **260**, a wireless control system **310**, a service provider server **240**, a multilayer switch **312**, a route switch processor **314**, a network **330**, a router **350**, a wireless LAN controller **352**, a wireless services module **354**, a wireless LAN controller module **356**, a switch **358**, wireless access points **360**, Wi-Fi tags **370**, stationary wireless sensors **375**, or chokepoints, users **120**A-N and badges **220**A-N. For example, the wireless location server **260** may be a CISCO WIRELESS LOCATION APPLIANCE, the wireless control system **310** may be a CISCO WIRELESS CONTROL SYSTEM, the wireless LAN controller **352** may be a CISCO WIRELESS LAN CONTROLLER, and the wireless access points **360** may be lightweight wireless access points, such as CISCO AIRONET ACCESS POINTS. Alternatively, or in addition, the wireless access points **360** may be CAPWAP wireless access points. Alternatively or in addition, the access points **360** may include mobile access point measurement and location units (MAMALs) when the positioning of the wireless access points **360** is being determined. MAMALs are discussed in more detail in FIG. **6** and FIG. **7** below.

The stationary wireless sensors **375** may include gas sensors, such as hazardous gas sensors, and may be mounted in areas requiring monitoring. The stationary wireless sensors **375** may detect the presence of the Wi-Fi tags **370** and/or the badges **220**A-N. Alternatively or in addition, if the stationary wireless sensors **375** include gas sensors, the stationary wireless sensors **375** may detect the presence of hazardous gases. The sensors of the stationary wireless sensors **375**, and the sensors of the badges **220**A-N, may function as a sensor network, such as the sensor network described in FIG. **4** below. The controllers **352**, **356**, may be stationary, or may be mobile, such as located inside a vehicle. In the case of a mobile controller **352**, **356**, the controller **352**, **356** is mobile across high latency links.

FIG. **4** is a block diagram of a sensor network **400** implementing the system of FIG. **1** or other systems for relative positioning of access points in a real time locating system. Not all of the depicted components may be required, however, and some implementations may include additional components not shown in the figure. Variations in the arrangement

and type of the components may be made without departing from the spirit or scope of the claims as set forth herein. Additional, different or fewer components may be provided.

The sensor network **400** may include a facility **410**, a network **230**, and a service provider server **240**. The facility may include rooms **415**A-D. Room A **415** A may include a user B **120**B, a badge B **220**B, and a stationary wireless sensor **375**. Room B **415**B may include a stationary wireless sensor **375**. Room C **415**C may include a user A **120**A, and a badge A **120**A. Room D **415**D may include a stationary wireless sensor **375**. In operation, the badges **220**A-B and stationary wireless sensors **375** may detect hazardous gas levels and may communicate the hazardous gas levels to the service provider server **240** through the network **230**. The sensor network **400** may also include one or more network components which are not shown in FIG. **4**, such as the network components shown in FIG. **3**.

The stationary wireless sensors **375** may be mounted in rooms or areas which are not frequently visited by the users **120**A-N. For example, the room B **415**B and the room D **415**D may not be frequently visited by the users **120**A-N. Alternatively, sensors **375** may not be placed in rooms or areas where users **120**A-N are frequently present. For rooms or areas where users **120**A-N are frequently present, the badges **220**A-N of the users **120**A-N may act as substitutes for the sensors **375**. That is, since the users **120**A-N wearing badges **220**A-N containing sensors are frequently present in these areas, there may not be a need for additional stationary sensors **375**. Alternatively or in addition, stationary wireless sensors **375** may be placed in rooms where users **120**A-N are frequently present if these areas require a higher level of fidelity in the detection of hazardous gases. In this instance, the service provider server **240** may be able to identify both the specific room where hazardous gas is detected and a particular region of the room where hazardous gas is detected.

The sensor network **400** may also be used to predict the movement of a hazardous gas. For example, the differing levels of a hazardous gas detected by the sensors **375** and the badges **220**A-B, along with the rate of change in the levels of the hazardous gas, may be used to predict the movement of the hazardous gas. Predicting the movement of the hazardous gas may allow the service provider server **240** to transmit pro-active alarms to the badges **220**A-N of the users **120**A-N. That is, the service provider server **240** may transmit alarms to users **120**A-N that are not currently in danger, but have a high likelihood of being in danger in a short period of time, such as 5 minutes. Using the sensor network to predict high risk areas is discussed in more detail in FIG. **10** below.

FIG. **5**A provides an illustration of an exemplary gas detection and locating device **500**A with wired components in the system of FIG. **1** or other systems for relative positioning of access points in a real time locating system. Not all of the depicted components may be required, however, and some implementations may include additional components not shown in the figure. Variations in the arrangement and type of the components may be made without departing from the spirit or scope of the claims as set forth herein. Additional, different or fewer components may be provided.

The gas detection and locating device **500**A may be used as one of the badges **220**A-N in FIGS. **2-4** above. The gas detection and locating device **500**A may include a casing **505**, a location device **510**, a gas detector **520**, and a connector **530**. The location device **510** may include a wired interface **512**, a location processor **514**, and an interface **516**, such as a network interface. The gas detector **520** may include a wired interface **522**, a gas sensor **524**, and a sensor **526**. In one example, the location device **510** may be a LENEL badge, or location sensor, or an AEROSCOUT TAG, such as an AEROSCOUT T3 TAG, an AEROSCOUT T4B tag, an AEROSCOUT T5 SENSOR TAG, or an AEROSCOUT T6 GPS TAG, and the gas detector **520** may be an INDUSTRIAL SCIENTIFIC GAS BADGE, such as an INDUSTRIAL SCIENTIFIC GASBADGE PLUS, an INDUSTRIAL SCIENTIFIC MX-4, an INDUSTRIAL SCIENTIFIC MX-6, or an INDUSTRIAL SCIENTIFIC GASBADGE PRO. The casing **505** may be the original housing of the location device **510**. In this example, the gas detector **520** would be added to the casing of the location device **510**. Alternatively, the casing **505** may be the original housing of the gas detector **520**. In this example, the location device **510** would be added to the casing of the gas detector **520**.

The location device **510** and the gas detector **520** may be in communication via the connector **530**. For example, the wired interface **512** of the location device may be connected to the connector **530**, and the connector **530** may be connected to the wired interface **522** of the gas detector. The connector **530** may be a wired connector, such as an RS-232 serial connection cable, a wire, or generally any connector capable of coupling the location device **510** to the gas detector **520**. The gas detector **520** may communicate information determined by the gas sensor **524** and/or the sensor **526**, such as the amount of gas the user A **120**A has been exposed to, to the location device **510**.

The location processor **514** of the location device **510** may determine the location of the gas detection and locating device **500**A, such as through a positioning system. For example, the location processor **514** may be in communication with one or more GPS satellites, and may receive location information from the GPS satellites. The location processor **514** may communicate the location information to the interface **516**. The interface **516** may enable the gas detection and locating device **500**A to communicate with the network **230**. The interface **516** may be a wireless network connection, a wired network connection, an infrared network connection, or generally any connection capable of providing communication between the gas detection and location device **500**A and the network **230**. When the location device **510** receives sensor information from the gas detector, the location device **510** may communicate the sensor information, and the current location of the gas detection and locating device **500**A to the service provider server **240** via the network **230**.

The gas sensor **524** of the gas detector **520** may be a sensor capable of detecting the amount of hazardous gas a user is being exposed to. The gas sensor **524** may be capable of detecting one or more hazardous gases, such as hydrogen sulfide (H_2S), nitrogen dioxide (NO_2), sulfur dioxide (SO_2), carbon dioxide (CO_2), carbon monoxide (CO), oxygen (O_2), LEL, or generally any gases. In order to ensure the gas sensor **524** is accurately identifying the amount of gas a user A **120**A is being exposed to, the gas detection and locating device **500**A may be worn close to the mouth and/or nose of the user A **120**A, such as within ten inches of the mouth of the user A **120**A. The gas sensor **524** may communicate the amount of gas detected to the wired interface **522**. The wired interface **522** may communicate the amount of gas detected to the location device **510**. Alternatively or in addition, the gas sensor **524**, or a coupled processor, may process the amount of gas detected to determine if the amount satisfies an alarm threshold. If the gas sensor **524** determines that the amount satisfies the alarm threshold, the gas sensor **524** may communicate an alarm to the location device **510** via the wired interface **522**. Alternatively or in addition, the location processor **514**, or a coupled processor, may determine if the amount of gas detected satisfies the alarm threshold.

The sensor **526** may detect other stimuli, such as biometric information or heat exhaustion information. The sensor **526** may communicate the biometric information to the location device **510** via the wired interface **522**. Alternatively or in addition, the sensor **526** may detect whether the user A **120**A is moving. For example, the sensor **526** may detect that the user A **120**A has not moved for an extended period of time. In this instance, the sensor **526** may activate a local alarm on the gas detecting and locating device **500**A. The local alarm may cause the gas detection and locating device **500**A to vibrate, light up, beep, or otherwise notify the user A **120**A of the lack of movement. The user A **120**A may respond to the local alarm by pressing a button on the outside of the casing **505**. If the user A **120**A does not press the button within a period of time, such as ten seconds, the sensor **526** may communicate an alarm to the service provider server **240** via the location device **510**.

Alternatively or in addition, the outside of the casing **505** of the gas detection and locating device **500**A may include one or more buttons, lights, sensors, and/or displays. For example, the outside of the casing **505** may have a panic button that can be activated by the user A **120**A in the case of an emergency. The casing **505** may also have a cancel button, which may allow the user A **120**A to cancel an alarm, such as an alarm caused by lack of motion. The casing **505** may also include one or more lights, or displays, which may light up or change colors when the user A **120**A is exposed to different levels of gases. Alternatively or in addition, the outside of the casing **505** may include a display which may display the amount of gas the user A **120**A is currently being exposed to and whether the current level of exposure is dangerous to the health of the user A **120**A. The display may also display the reason an alarm has been initiated by the gas detection and locating device **500**A.

Alternatively or in addition, the gas detection and locating device **500**A may be intrinsically safe, such as Class I, Division 2, simple and easy to use, reasonably sized, such as no longer than a mobile phone, and able to attach to a front pocket or helmet, such as generally within ten inches of a breathing zone of a user A **120**A.

FIG. **5**B provides an illustration of an exemplary gas detection and locating device **500**B in the system of FIG. **1** or other systems for relative positioning of access points in a real time locating system. Not all of the depicted components may be required, however, and some implementations may include additional components not shown in the figure. Variations in the arrangement and type of the components may be made without departing from the spirit or scope of the claims as set forth herein. Additional, different or fewer components may be provided.

The gas detection and locating device **500**B may be used as one of the badges **220**A-N in FIG. **2** above. The gas detection and locating device **500**B may include a location device **510** and a gas detector **520**. The location device **510** may include a wireless interface **518**, a location processor **514**, and an interface **516**. The gas detector **520** may include a wireless interface **528**, a gas sensor **524**, and a sensor **526**. In one example, the location device **510** may be an AEROSCOUT TAG, such as an AEROSCOUT T3 TAG, an AEROSCOUT T5 SENSOR TAG, or an AEROSCOUT T6 GPS TAG, and the gas detector **520** may be a INDUSTRIAL SCIENTIFIC GAS BADGE, such as an INDUSTRIAL SCIENTIFIC GASBADGE PLUS, an INDUSTRIAL SCIENTIFIC MX-4, an INDUSTRIAL SCIENTIFIC MX-6, or an INDUSTRIAL SCIENTIFIC GASBADGE PRO.

The location device **510** and the gas detector **520** may be in communication via the wireless interfaces **518**, **528**. The wireless interfaces **518**, **528** may communicate via one or more wireless communication protocols, such as Bluetooth, infrared, Wi-Fi, wireless universal serial bus (USB), radio frequency, or generally any wireless communication protocol. The gas detector **520** may communicate information determined by the gas sensor **524** and/or the sensor **526**, such as the amount of gas the user A **120**A has been exposed to, to the location device **510** via the wireless interfaces **518**, **528**. The wireless interfaces **518**, **528**, may allow for the location device **510** to be located remotely from the gas detector **520**, on the user A **120**A. For example, the gas detector may be part of an identification badge which may be within a certain distance of the mouth and/or nose of the user A **120**A, such as ten inches. However, the location device **510**, may be in the pocket of the user A **120**A, or may be clipped to the belt of the user A **120**A, thus reducing the size and weight of the identification badge.

The location processor **514** of the location device **510** may determine the location of the gas detection and locating device **500**A, such as through a positioning system. For example, the location processor **514** may be in communication with one or more GPS satellites, and may receive location information from the GPS satellites. The location processor **514** may communicate the location information to the interface **516**. The interface **516** may enable the gas detection and locating device **500**A to communicate with the network **230**. The interface **516** may be a wireless network connection, a wired network connection, an infrared network connection, or generally any connection capable of providing communication between the gas detection and location device **500**A and the network **230**. When the location device **510** receives sensor information from the gas detector, the location device **510** may communicate the sensor information, and the current location of the gas detection and locating device **500**A to the service provider server **240** via the network **230**.

The gas sensor **524** of the gas detector **520** may be a sensor capable of detecting the amount of hazardous gas a user is being exposed to. The gas sensor **524** may be capable of detecting one or more hazardous gases, such as hydrogen sulfide, nitrogen dioxide, sulfur dioxide, carbon dioxide, carbon monoxide, or generally any gases. In order to ensure the gas sensor **524** is accurately identifying the amount of gas a user A **120**A is being exposed to, the gas detection and locating device **500**A may be worn close to the mouth and/or nose of the user A **120**A, such as within ten inches of the mouth of the user A **120**A. The gas sensor **524** may communicate the amount of gas detected to the wired interface **522**. The wired interface **522** may communicate the amount of gas detected to the location device **510**. Alternatively or in addition, the gas sensor **524**, or a coupled processor, may process the amount of gas detected to determine if the amount satisfies an alarm threshold. If the gas sensor **524** determines that the amount satisfies the alarm threshold, the gas sensor **524** may communicate an alarm to the location device **510** via the wired interface **522**. Alternatively or in addition, the location processor **514**, or a coupled processor, may determine if the amount of gas detected satisfies the alarm threshold.

The sensor **526** may detect other stimuli, such as biometric information. The sensor **526** may communicate the biometric information to the location device **510** via the wired interface **522**. Alternatively or in addition, the sensor **526** may detect whether the user A **120**A is moving. For example, the sensor **526** may detect that the user A **120**A has not moved for an extended period of time. In this instance, the sensor **526** may activate a local alarm on the gas detecting and locating device **500**A. The local alarm may cause the gas detection and locating device **500**A to vibrate, light up, beep, or otherwise notify

the user A **120**A of the lack of movement. The user A **120**A may respond to the local alarm by pressing a button on the outside of the location device **510** and/or the gas detector **520**. If the user A **120**A does not press the button within a period of time, such as ten seconds, the sensor **526** may communicate an alarm to the service provider server **240** via the location device **510**.

Alternatively or in addition, the outside casing of the location device **510** and/or the gas detector **520** may include one or more buttons, lights, sensors, and/or displays. For example, the outside casing of the location device **510** and/or the gas detector **520** may include a panic button that may be activated by the user A **120**A in the case of an emergency. The outside casing of the location device **510** and/or the gas detector **520** may also include a cancel button, which may allow the user A **120**A to cancel an alarm, such as an alarm caused by lack of motion. The outside of the location device **510** and/or the gas detector **520** may further include one or more lights, or displays, such as a liquid crystal display (LCD) which may light up or change colors when the user A **120**A is exposed to different levels of gases. Alternatively or in addition, the outside casing of the location device **510** and/or the gas detector **520** may include a display which may display the amount of gas the user A **120**A is currently being exposed to and whether the current level of exposure is dangerous to the health of the user A **120**A.

Alternatively or in addition the gas detector **520** may include an interface, such as a network interface, for communicating gas data to the service provider server **240**. In this example, the gas detector **520** and the location device **510** may be associated with a user A **120**A. For example, there may be record in the data store **245** which associates an identifier of the gas detector **520** and an identifier of the location device **510** with an identifier of the user A **120**A. The gas detector **520** may communicate gas data and an identifier of the gas detector **520** to the service provider server **240**. The service provider server **240** may use the identifier of the gas detector **520** to retrieve from the data store **245** an identifier of the user A **120**A associated with the gas detector **520**, and the location device **510** associated with the user A **120**A. The service provider server **240** may then request location data from the identified location device **510**. Thus, the service provider server **240** is able to communicate individually with the gas detector **520** and the location device **510**.

FIG. **6** is a block diagram of an exemplary mobile access point measurement and location unit (MAMAL) **600** in the system of FIG. **1** or other systems for relative positioning of access points in a real time locating system. Not all of the depicted components may be required, however, and some implementations may include additional components not shown in the figure. Variations in the arrangement and type of the components may be made without departing from the spirit or scope of the claims as set forth herein. Additional, different or fewer components may be provided.

The MAMAL **600** may include an enclosure **610**, one or more antennas **620**, one or more access points, a power supply and one or more zip ties to secure the antennas **620**. For example, the enclosure **610** may be a rugged enclosure such that the MAMAL can be transported to various work environments. The antennas **620** may include one or more 2.4 gigahertz 6 dBi mast antennas and/or one or more 5.8 gigahertz 6 dBi mast antennas. The antennas **620** may further include one foot shielded cable extension. The access points may be any wireless access points, such as Cisco 1242 AG access points. The access points may also include Power over Ethernet functionality, such as IEEE 802.3af Power over Ethernet (PoE). The power supply may be a TerraWave MIMO site survey battery pack.

In operation, one or more MAMALs **600** may be used as a self-contained access points to deploy a temporary mesh network used for RF site surveying. The MAMAL **600** may be moved freely from structure to structure, and work area to work area, without the need for in-line power. One or more MAMALs **600** may also be used to rapidly deploy a meshed network for proof of concepts and pilots. A minimum number of MAMALs **600** may be required for various sized work areas and/or structures. For example, a minimum of three MAMALs may be needed for site surveying with the guidelines of one MAMAL for every 10,000 square feet to cover.

FIG. **7** is a block diagram of an exemplary mobile access point measurement and location unit (MAMAL) **700** in the system of FIG. **1** or other systems for relative positioning of access points in a real time locating system. Not all of the depicted components may be required, however, and some implementations may include additional components not shown in the figure. Variations in the arrangement and type of the components may be made without departing from the spirit or scope of the claims as set forth herein. Additional, different or fewer components may be provided.

The MAMAL **700** may include an enclosure **710**, one or more wires **715**, a power supply **720**, one or more antennas, one or more access points, and one or more zip ties to secure the antennas. For example, the enclosure **710** may be a rugged enclosure such that the MAMAL can be transported to various work environments. The power supply **720** may be a TerraWave MIMO site survey battery pack. The wires **715** may be connected to the power supply **720** and the one or more access points. The one or more access points may be any wireless access points, such as Cisco 1242 AG access points. The access points may also include Power over Ethernet functionality, such as IEEE 802.3af Power over Ethernet (PoE). The antennas may include one or more 2.4 gigahertz 6 dBi mast antennas and/or one or more 5.8 gigahertz 6 dBi mast antennas. The antennas may include one foot shielded cable extension.

In operation, one or more MAMALs **700** may be used as a self-contained access points to deploy a temporary mesh network used for RF site surveying. The MAMAL **700** may be moved freely from structure to structure, and work area to work area, without the need for in-line power. One or more MAMALs **700** may also be used to rapidly deploy a meshed network for proof of concepts and pilots. A minimum number of MAMALs **700** may be required for various sized work areas and/or structures. For example, a minimum of three MAMALs may be needed for site surveying with the guidelines of one MAMAL for every 10,000 square feet to cover.

FIG. **8** is a flowchart illustrating the general operations of relative positioning of access points in the system of FIG. **1**, or other systems for relative positioning of access points in a real time locating system. The steps of FIG. **8** are described as being performed by the service provider server **240**. However, the steps may be performed by the processor of the service provider server **240**, or by any other hardware component of the service provider server **240**. Alternatively the steps may be performed by an external hardware component.

At step **810**, the service provider server **240** may retrieve the layout of the facility or work area, such as from the data store **245**. Alternatively or in addition, the service provider server **240** may receive the layout of the facility from the third party server **250**, or from the operator **110** via the computing device **210**. Alternatively or in addition, the service provider server **240** may also receive one or more business require-

ments associated with the positioning of the access points **360**. For example, the business requirements may include location accuracy, such as no less than fifty feet, wireless coverage, individual safety, system reliability, cost and deployment timeframe. The layout of the work area may include one or more architectural attributes, and one or more infrastructure attributes.

At step **820**, the service provider server **240** identifies the one or more architectural attributes of the layout. For example, the architectural attributes may include the physical layout of the work area, such as the number of levels, the unit dimensions, key structures within the unit, such as boilers, pipe alleys, etc., hazardous areas, high foot traffic areas, or generally any attributes related to, or affected by, the architectural design of the work area. At step **830**, the service provider server **240** identifies the infrastructure attributes of the work area. For example, the infrastructure attributes may include network switch locations, fiber or copper runs, lighting systems, backup power systems, power outlets, network outlets, or generally any attributes related to, or affected by, the infrastructure of the work area.

At step **840**, the service provider server **240** may determine test locations of tags, such as radio frequency identification tags, or the gas detection and locating devices **500**A-B. The location of the test tags may be based on operator rounds and the high foot traffic areas of the work area, that is, areas where many individuals are expected to be. The tags may be initialized and configured prior to placing them within the work area. The tags may be activated using a tag activator. The operator may input the actual location of the test tags to the service provider server **240**, such that the actual locations can be compared against the locations determined based on readings of the access points.

At step **850**, the service provider server **240** may determine the number and initial location of access points in the work area. The initial number of access points may be based on the overall square footage of the work area. The access points may be positioned using a top-down approach. Elevated access points may be used to provide coverage on high levels within the work area. The initial location of the access points may be based on the architectural and infrastructure attributes of the work area. For example, access points may not be placed within close proximity, such as eight feet, to large concrete or metal obstructions identified in the attributes. The positioning of the access points may provide line-of-sight coverage for high traffic walkways. The positioning of the access points may include a mixture of elevations, such as ground, mid-level and high. The access points may be positioned relative to one another to form equilateral triangles or squares. Alternatively or in addition, the access points may form a circle or other polygons, such as rhombus, trapezoid, parallelograms, or rectangles. The positioning of the access points may avoid lines, as they may provide less accuracy. The location and coverage of nearby access points may be included in determining where to position an access point. The access points may be positioned such that tags in the work area receive good signal coverage from three or more access points. The access points may be positioned such that the perimeter of the access points closely coincides with the physical perimeter of the work area. The access points may be positioned close to, or inside of, the unit battery limits. If the target accuracy is fifty meters, the access points may not be placed more than twenty-five meters from physical boundaries. The access points may be positioned such that two access points in are not placed in the same location at different elevations.

Alternatively or in addition, the location of the tags may be re-determined once the access point locations are determined. For example, the location of test tags may be based on various proximities to access points. The test tags may also be distributed throughout the unit's battery limits, and at various elevations.

At step **870**, the service provider server **240** may test the wireless coverage of the tags, and location accuracy, provided by the positioning of the access points. The operator **110** may place MAMALs in the identified locations of the access points to test the tag coverage. By using the MAMALs, the operator may test portions of the work area, one by one, without requiring access points for the entire work area. The MAMALs may be reused for testing each portion, or partition, of the work area. The service provider server **240** may access the readings of the MAMALs, such as via the network **230**. The service provider server **240** may perform multiple readings of the coverage, such as ten to twelve, using different locations of the access points or tags. Likewise, the service provider server **240** may limit changes between recordings to a single access point or tag movement to minimize variation between recordings.

The test tags may be used as points of reference within the system **100** for taking RF measurements. For example, the operator **110** may provide the service provider server **240** with the actual location of a tag. The service provider server **240** may then test the accuracy of the access points by determining whether the location provided by the access points coincides with the actual location of the tags. For example, the operator **110** may identify a small, high elevation area within the work area. The operator **110** may place a high density of tags around the identified area. The service provider server **240** may then perform a test on the small area to determine the coverage and accuracy that may be possible. Once the operator **110** is able to arrange the tags into an acceptable accuracy for the area, such as less than twenty meters, the tags may be moved to various places and elevations to determine an overall reading. The small to large area approach may be executed from the top of the work area down.

The service provider server **240** may also generate one or more reports related to testing the coverage and location accuracy of the access points. For example, the service provider server **240** may generate a placement analysis report. The placement analysis report may include information describing multiple recordings, or readings, of the access point coverage and location accuracy. For example, each recording may be analyzed for coverage and location accuracy, such as by using the RSSI strength, the average accuracy, access point placement descriptions, tag coverage, or generally any other factors. An exemplary placement analysis report is discussed in FIG. **18** below. Alternatively or in addition, the service provider server **240** may provide one or more user interfaces which provide a graphical display of the coverage and location accuracy results. Exemplary user interfaces displaying the coverage and location accuracy results are discussed in more detail in FIGS. **15-17** below.

At step **875**, the service provider server **240** may determine whether the tag coverage and location accuracy satisfy a threshold. The threshold may be determined based on one or more of individual safety, system reliability, and cost. For example, the threshold may indicate that the coverage should be at least −75 dBm (decibels (dB) of the measured power referenced to one milliwatt (mW)) for the entire work area. Alternatively, the threshold may indicate that each test tag should be covered by three or more access points with at least −75 dBm of coverage. The threshold may also indicate that

the location accuracy should be an average of twenty meters or less. The location accuracy may be determined by comparing the actual location of the tags inputted by the operator with the location of the tags determined from information received from the access points. Alternatively, the threshold may indicate that a substantially minimal number of tags may have coverage from less than three access points. The threshold may also indicate that the access points individual coverage analysis should be OK or better.

If, at step **875**, the service provider server **240** determines that the coverage and location accuracy does not satisfy the threshold, the service provider server **240** moves to step **890**. At step **890**, the service provider server **240** determines a repositioning of one or more of the access points based on the tested coverage and location accuracy. For example, if a first test tag tested with an accuracy and coverage above the threshold, and a nearby second test tag tested with an accuracy and coverage below the threshold, then an access point between the two tags may be moved close to the second test tag. Alternatively or in addition, the service provider server **240** may determine that the threshold cannot be met with the number of access points currently in the configuration. In this case, the service provider server **240** may add additional access points to the configuration and may position the access points nearby tags for which the coverage or location accuracy does not meet the threshold.

If, at step **875**, the service provider server **240** determines that the location accuracy and coverage of the work area, or of the individual test tags, satisfies the threshold, the service provider server **240** moves to step **880**. At step **880**, the service provider may generate and provide the determined layout of the access points. The determined layout may include the placement of each access point, including the height of each access point.

Alternatively or in addition, the service provider server **240** may provide one or more verification tests prior to finalizing the layout of the access points. The verification tests may be designed to ensure the best case accuracy is achieved as well as mimic the production system during additional testing, such as a walk around testing. The verification tests may include a multipoint testing matching the selected access point and tag locations over multiple days. These tests may demonstrate RF change over time and confirm that the coverage and accuracy are consistent.

Another verification test may be a path loss test. Path loss may be a measure of RF power loss (dBm or watts) over a specific distance. By increasing the path loss value in the service provider server **240**, the service provider server **240** is able to effectively calculate a higher gain for the access points then they actually have. For example, a path loss of 3.5 may be used for indoor use and 2.5 for outdoor use. Since RF environments may be different, path loss should be determined for each unit, or facility, to determine best case accuracy. When taking multiple recordings, the path loss of each recording may be incremented by 0.2 until accuracy decreases. The recording with the best accuracy (the recording prior to the first decreased accuracy reading) should be used as the path loss number.

Another verification test may include a single click verification test. The single click test may be used to confirm coverage and accuracy using more reference points than multipoint test, such as forty to fifty. Single click tests may take more time to complete compared to multi-point recording tests. As such, the single click tests may not be performed until the location of the access points is known with a certain accuracy, such as ninety-five percent. The single click tests may take measurements by mapping individual test recordings together to create coverage and accuracy information. The tests may allow flexibility in reference point location since they do not require tags to be placed prior to recording. The operator may find a physical measurement location, input the reference point into the service provider server **240** and record. For the best results of the single click testing, the operator **110** may start on the outside of edge of the test area and take recordings every twenty to thirty feet in a clockwise pattern moving outside in. Once the ground level is completed, the operator **110** may move to the next level and take recordings using the clockwise click pattern. This pattern may be continued until all levels are completed.

Another verification test may be a walk around test. A walk around test may be designed to mimic what operators and users of the real time location and gas exposure monitoring system may view when individuals are being tracked. Alternatively, one or more of the above-described verification tests may be performed at step **870**, and the results of the tests may be used at step **875** to determine whether the threshold is met.

FIG. **9** is a flowchart illustrating the generation of an access point configuration in the system of FIG. **1**, or other systems for relative positioning of access points in a real time locating system. The steps of FIG. **9** are described as being performed by the service provider server **240**. However, the steps may be performed by the processor of the service provider server **240**, or by any other hardware component of the service provider server **240**. Alternatively the steps may be performed by an external hardware component.

At step **905**, the service provider server **240** may retrieve the layout of the facility or work area, such as from the data store **245**. Alternatively or in addition, the service provider server **240** may receive the layout of the facility from the third party server **250**, or from the operator **110** via the computing device **210**. The layout may include the architectural layout of the work area, including the number of rooms, the size of the rooms, the number of floors, the size of the floors, the height of the floors, and generally any other information that may be related to, or affected by the architectural layout of the work area. The layout may also include the infrastructure layout of the work area, including the location of power outlets, the location of network outlets, the location of power systems, the location and size of any metallic or concrete objects, or generally any information related to, or affected by, the infrastructure layout. Alternatively or in addition, the service provider server **240** may also receive one or more business requirements associated with the system **100**. For example, the business requirements may include location accuracy, such as no less than fifty feet, wireless coverage, individual safety, system reliability, cost and deployment timeframe. The layout of the work area may include one or more architectural attributes, and one or more infrastructure attributes.

At step **910**, the service provider server **240** may identify the floor levels and the heights of the floor levels, such as identifying from the layout. The floor levels and heights may be architectural attributes of the work area. At step **915**, the service provider server **240** may identify the high traffic areas of the work area, such as from the layout. The high traffic areas may be walkways or other areas where large numbers of people are expected. At step **920**, the service provider server **240** may determine test locations of tags, such as radio frequency identification tags, or the gas detection and locating devices **500**A-B. The location of the test tags may be based on operator rounds and the high foot traffic areas of the work area, that is, areas where many individuals are expected to be. The operator may input the actual location of the test tags to the service provider server **240**, such that the actual locations

can be compared against the locations determined based on information from the access points.

At step **925**, the service provider server **240** may configure, catalog, and/or activate the test tags. The tags may be activated prior to performing the testing and deactivated after performing the testing, in order to conserve battery power. Each tag may be cataloged using an identifier of the tag, such as a MAC address of the tag. Each tag may be activated using a tag activator. For example, the tag activator may be connected to the network **230**, such as using an Ethernet cable. The tag may be powered on and placed within close proximity of the tag activator. The service provider server **240** may then activate the tag via the tag activator. The tags may be configured with various settings, such as channel selection, transmission interval, motion sensoring, and any other settings which are supported by the tags.

At step **930**, the service provider server **240** may identify areas of the work area which are proximal to electrical access and network access. For example, the service provider sever **240** may identify power outlets and network outlets in the layout. The areas proximal to the network access may be beneficial for placing the access points such that the access points can be wired into the network. Likewise, the power outlets may be used to connect the access points through a power over Ethernet connection.

At step **935**, the service provider server **240** may determine the initial number and placement of the access points. The initial number of access points may be based on the overall square footage of the work area. The access points may be positioned using a top-down approach. Elevated access points may be used to provide coverage on high levels within the work area. The initial location of the access points may be based on the architectural and infrastructure attributes of the work area. For example, access points should not be placed within close proximity, such as eight feet, to large concrete or metal obstructions identified in the attributes. The positioning of the access points may provide line-of-sight coverage for high traffic walkways. The positioning of the access points should include a mixture of elevations, such as ground, mid-level and high. The access points should be positioned relative to one another to form equilateral triangles or squares. Alternatively or in addition, the access points may form a circle or other polygons, such as rhombus, trapezoid, parallelograms, or rectangles. The positioning of the access points should avoid lines, as they may provide less accuracy. The location and coverage of nearby access points should be included in determining where to position an access point. The access points should be positioned such that tags in the work area receive good signal coverage from three or more access points. The access points should be positioned such that the perimeter of the access points closely coincides with the physical perimeter of the work area. The access points should be positioned close to, or inside of, the unit battery limits. If the target accuracy is fifty meters, the access points should not be placed more than twenty-five meters from physical boundaries. The access points should be positioned such that two access points in are not placed in the same location at different elevations.

Alternatively or in addition, the location of the tags may be re-determined once the access point locations are determined. For example, the location of test tags may be based on various proximities to access points. The test tags may also be distributed throughout the unit's battery limits, and at various elevations.

At step **940**, the service provider server **240** selects the first tag. At step **945**, the service provider server **240** tests the coverage of the tag. At step **950**, the service provider server **240** may determine whether the coverage of the tag satisfies the coverage threshold. If the coverage of the tag does not meet the coverage threshold, the service provider server **240** moves to step **955**. At step **955**, the location of the access points are repositioned to improve the coverage of the tag. The service provider server **240** then returns to step **945** and test the tag coverage again.

If, at step **950**, the service provider server **240** determines that the coverage of the tag meets the coverage threshold, the service provider server **240** moves to step **965**. At step **965**, the service provider server **240** determines whether there are any additional tags to test. If, at step **965**, the service provider server **240** determines there are additional tags to test, the service provider server **240** moves to step **970**. At step **970**, the service provider server **240** selects the next tag and moves to step **945** to test the next tag. If, at step **965**, the service provider server **240** determines that there are no additional tags to test, the service provider server **240** moves to step **975**.

Alternatively or in addition, the service provider server **240** may reposition the access points as a whole. For example, the location of each access point may be considered a part of a vector, such that the location of each access point has some effect over the accuracy of the other access points. Thus, moving one access point may increase, or decrease, the accuracy of other access points.

At **975**, the service provider server **240** selects the first access point. At step **980**, the service provider server **240** determines whether the access point meets the location accuracy threshold. For example, the threshold may indicate that the location accuracy should be an average of twenty meters or less. The location accuracy may be determined by comparing the actual location of the tags inputted by the operator with the location of the tags determined from information received from the access points.

If, at step **980**, the service provider server **240** determines that the access point meets the accuracy threshold, the service provider server **240** moves to step **992**. At step **992**, the service provider server **240** determines whether there are additional access points. If, at step **992**, the service provider server **240** determines that there are additional access points, the service provider server **240** moves to step **990**. At step **990**, the service provider server **240** selects the next access point and then returns to step **980**.

If, at step **980**, the service provider server **240** determines that the access point does not meet the accuracy threshold, the service provider server **240** moves to step **985**. At step **985**, the service provider server **240** may reposition the access point and return to step **980** to re-test the location accuracy of the access point. If, at step **992**, the service provider server **240** determines that there are no additional access points, the service provider server **240** moves to step **995**. At step **955**, the service provider server **240** provides the access point configuration, such as to the operator.

FIG. **10** is a flowchart illustrating the detection of gas by a gas detection and locating device in the system of FIG. **1**, or other systems for relative positioning of access points in a real time locating system. The steps of FIG. **10** are described as being performed by a gas detection and locating device **500**A, **500**B. However, the steps may be performed by the processor of the gas detection and locating device **500**A, **500**B, or by any other hardware component of the gas detection and locating device **500**A, **500**B. Alternatively the steps may be performed by an external hardware component.

At step **1010**, the gas detection and locating device **500**A may detect a hazardous gas in the vicinity of the user A **120**A. For example, the gas sensor **524** of the gas detection and locating device **500**A may detect a hazardous gas, such as

hydrogen sulfide. At step **1020**, the gas detection and locating device **500**A may determine whether the level of hazardous gas meets an alarm threshold. The alarm threshold may be identified by the operator **110** and may be stored in the data store **245**. If, at step **1020**, the gas detection and locating device **500**A determines that the level of gas detected does not meet the alarm threshold, the gas detection and locating device **500**A moves to step **1030**. At step **1030**, the gas detection and locating device **500**A does not transmit an alarm as the level of gas detected does not meet the threshold level.

If, at step **1020**, the gas detection and locating device **500**A determines that the level of gas meets the alarm threshold, the gas detection and locating device **500**A moves to step **1040**. At step **1040**, the gas detection and location device **500**A activates a local alarm. The local alarm may cause the gas detection and locating device **500**A to vibrate, flash, play a sound, or otherwise attract the attention of the user A **120**A. At step **1050**, the gas detection and locating device **500**A transmits an alarm to the service provider server **240**. The alarm data may include the amount of gas the user A **120**A has been exposed to, and the location of the user A **120**A. For example, the gas sensor **524** may communicate the amount of gas exposure to the location device **510**. The location device may retrieve the location of the user A **120**A from the location processor **514**, if available. The location device **510** may then transmit the amount of gas exposure and the location of the user A **120**A to the service provider server **240**. Alternatively or in addition, if the location of the user A **120**A cannot be determined by the location device **510**, the service provider server **240** may retrieve the location of the user A **120**A from the wireless location server **260**. The service provider server **240** may receive the alarm data item and may perform one or more alarm handling actions based on the alarm data. The actions performed by the service provider server **240** are discussed in more detail in FIG. **13** below.

Alternatively or in addition, the gas detection and locating device **500**A may communicate the amount of gas exposure and the location of the user A **120**A to the service provider server **240** on a periodic basis, such as every minute. The service provider server **240** may analyze the amount of gas exposure and location of the user A **120**A to determine whether the user A **120**A has been exposed to harmful levels of gas. If the service provider server **240** determines that the user A **120**A has been exposed to harmful levels of gas, the service provider server **240** may communicate an alarm to the gas detection and locating device **500**A, and may perform the one or more alarm handling actions. The gas detection and locating device **500**A may activate the local alarm. By off-loading the processing of the gas exposure data to the service provider server **240**, the size and weight of the gas detection and locating device **500**A may be reduced.

FIG. **11** is a flowchart illustrating a panic button activation by a gas detection and locating device in the system of FIG. **1**, or other systems for relative positioning of access points in a real time locating system. The steps of FIG. **11** are described as being performed by a gas detection and locating device **500**A, **500**B. However, the steps may be performed by the processor of the gas detection and locating device **500**A, **500**B, or by any other hardware component of the gas detection and locating device **500**A, **500**B. Alternatively the steps may be performed by an external hardware component.

At step **1110**, the gas detection and locating device **500**A may detect that the panic button on the outside of the casing **505** of the gas detection and locating device **500**A has been activated, such as when a user A **120**A presses the panic button. At step **1120**, the location device **510** may transmit an alarm to the service provider server **240**. The alarm data item may include the current gas exposure of the user A **120**A, as detected by the gas sensor **524**, and the current location of the user A **120**A. The service provider server **240** may receive the alarm data item and may perform one or more alarm response actions based on the received alarm data item. The alarm response actions are discussed in more detail in FIG. **13** below.

FIG. **12** is a flowchart illustrating a lack of motion detection by a gas detection and locating device in the system of FIG. **1**, or other systems for relative positioning of access points in a real time locating system. The steps of FIG. **12** are described as being performed by a gas detection and locating device **500**A, **500**B. However, the steps may be performed by the processor of the gas detection and locating device **500**A, **500**B, or by any other hardware component of the gas detection and locating device **500**A, **500**B. Alternatively the steps may be performed by an external hardware component.

At step **1210**, the gas detection and locating device **500**A may detect a lack of motion by the user A **120**A. For example, the gas detection and locating device **500**A may detect that the user A **120**A has not moved locations for a period of time. The period of time may be configured by the operator **110**, and may be any period of time, such as one minute. The operator **110** may configure different periods of time for each user **120**A-N, such as based on the age of the users **120**A-N, or other demographic information of the users **120**A-N. Alternatively or in addition, the period of time may be based on the current location of a user A **120**A. For example, if the user A **120**A is in a cafeteria, then the user A **120**A may be expected to be stationary for an extended period of time. Thus, the period of time may be longer when the user A **120**A is located in a cafeteria. However, when the user A **120**A is located within a hallway, the user A **120**A may be expected to be continuously moving, and therefore the period of time may be shorter. Alternatively or in addition, the gas detecting and location device **500**A may include an accelerometer. The accelerometer may be able to detect motion of the user A **120**A. Thus, if the accelerometer does not detect any motion for a period of time, a lack of motion alarm may be initiated.

Alternatively or in addition, the service provider server **240** may monitor the movement of the user A **120**A and may detect that the user A **120**A has not moved for the period of time. In this instance, the service provider server **240** may communicate a lack of motion alarm to the gas detection and locating device **500**A, which may cause the gas detection and locating device **500**A to move to step **1220**.

At step **1220**, the gas detection and locating device **500**A may activate a local alarm. As mentioned above, the local alarm may cause the gas detection and locating device **500**A to vibrate, light up, play a sound, or otherwise attract the attention of the user A **120**A. At step **1230**, the gas detection and locating device **500**A determines whether the user A **120**A responded to the local alarm within a response time. For example, the user A **120**A may press a button on the casing **505** of the gas detection and locating device **500**A to acknowledge the alarm and verify that there is not a problem. Alternatively or in addition, the user A **120**A may press another button on the casing **505** of the gas detection and locating device to indicate that there is a problem. The response time may be configurable and may be determined by the operator **110**. The response time may be any period of time, such as five seconds.

If, at step **1220**, the gas detection and locating device **500**A determines that the user A **120**A presses the button indicating that there is no problem within the response time, the gas detection and locating device **500**A moves to step **1240**. At step **1240**, the gas detection and locating device **500**A closes

the alarm. If the alarm was initiated by the service provider server **240**, the gas detection and locating device **500**A transmits an indication that the alarm should be closed to the service provider server **240**.

If, at step **1220**, the gas detection and locating device **500**A determines that the user A **120**A did not press the button within the response time, or the user A **120**A pressed the button indicating that there is a problem, the gas detection and locating device **500**A moves to step **1250**. At step **1250**, the gas detection and locating device transmits an alarm to the service provider server **240**. The alarm data may include the amount of gas the user A **120**A was exposed to and the current location of the user A **120**A. The service provider server **240** may receive the alarm data and may perform one or more alarm response actions based on the alarm data. The alarm response actions performed by the service provider server **240** are discussed in more detail in FIG. **13** below.

FIG. **13** is a flowchart illustrating an alarm received from a gas detection and locating device in the system of FIG. **1**, or other systems for relative positioning of access points in a real time locating system. The steps of FIG. **13** are described as being performed by the service provider server **240**. However, the steps may be performed by the processor of the service provider server **240**, or by any other hardware component of the service provider server **240**. Alternatively the steps may be performed by an external hardware component.

At step **1310**, the service provider server **240** may receive alarm data, such as from one of the gas detection and locating devices **220**A-N, such as the gas detection and locating device A **220**A. The alarm data may have been transmitted to the service provider server **240** in response to the panic button being pressed, the user A **120**A being exposed to an unhealthy level of hazardous gas, the user A **120**A not responding to a lack of motion alarm within the response period, or generally any other alarm related to the activity of the user A **120**A in the work area.

At step **1320**, the service provider server **240** may identify the individual. For example, the alarm data communicated to the service provider server **240** may include information identifying the user A **120**A, or identifying the gas detection and locating device A **220**A. If the information identifies the gas detection and locating device A **220**A, the service provider server **240** may retrieve data from the data store **245** to determine the user A **120**A associated with the gas detection and locating device A **220**A.

At step **1330**, the service provider server **240** may initiate communication with the user A **120**A in the field. For example, the service provider server **240** may automatically attempt to connect the operator **110** to the walkie-talkie of the user A **120**A, or the mobile phone of the user A **120**A. The service provider server **240** may retrieve the walkie-talkie and/or mobile phone information of the user A **120**A from the data store **245**. The operator may inform the user A **120**A that they have been exposed to harmful amounts of hazardous gas and should evacuate the contaminated area immediately. Alternatively or in addition, the service provider server **240** may utilize an interactive voice response system (IVR). The IVR may automatically connect to the walkie-talkie or mobile device of the user A **120**A and may play a message to the user A **120**A instructing the user A **120**A to evacuate the area immediately.

The service provider server **240** may identify the contaminated area based on the amount of gas the other users **120**B-N have been exposed to and the location of the other users **120**B-N within the work area. Alternatively or in addition, the service provider server **240** may receive gas level information from one or more stationary gas sensors located throughout the work area. If the service provider server **240** cannot isolate a contaminated area, the service provider server **240** may assume that the entire indoor work area is contaminated.

At step **1340**, the service provider server **240** may identify the location of the user A **120**A in the work area. The location of the user A **120**A in the work area may be determined based on the location information received from the gas detection and locating device **500**A and/or the network infrastructure, such as the wireless location server **260**. At step **1350**, the service provider server **240** may communicate an alarm, with the location of the user A **120**A within the work area, to one or more operators located within the vicinity of the user A **120**A. The operators may use mobile devices, such as an APPLE IPHONE, to view the alarm data and view the location of the user A **120**A relative to each operator. For example, the mobile device may include a map of the work area, which may display the current location of the operator and the location of the user A **120**A. The operators may attempt to reach the user A **120**A and evacuate the user A **120**A from the area contaminated with the hazardous gas.

Alternatively or in addition, the service provider server **240** may communicate the location of other users **120**B-N who also may need to be evacuated from the contaminated area. Although the amount of gas exposure of the users **120**A-N may be below the alarm threshold, the service provider server **240** may be able to predict an expected amount of gas exposure of the users **120**B-N over a period of time based on the gas exposure of the user A **120**A. If the service provider server **240** predicts an amount of gas exposure which meets the alarm threshold for the users **120**B-N, the users **120**B-N may also be evacuated from the contaminated area.

At step **1360**, the service provider server **240** may receive notification that the user A **120**A has been located by one of the operators. For example, an operator may locate the user A **120**A and may activate a button on their mobile device to indicate that the user A **120**A has been located. Alternatively or in addition, an operator may initiate a communication with the operator **110** and may inform the operator **110** that the user A **120** has been located. The operator **110** may then update the service provider server **240** via the computing device **210**.

At step **1365**, the service provider server **240** may determine whether emergency responders are required. Emergency responders may include medical personnel, hazardous material (HAZMAT) personnel, security personnel, fire department personnel, or generally any emergency responders. In one example, the operator **110**, or one of the operators who locates the user A **120**A, may communicate an indication to the service provider server **240** that one or more types of emergency personnel are required. Alternatively or in addition, the service provider server **240** may automatically identify one or more emergency responders required using data received from the gas detection and locating devices **220**A-N of the users **120**A-N, stationary gas detection devices, fire sensors, and/or any additional sensors the service provider server **240** has access to. For example, the service provider server **240** may determine that fire department personnel are required if one or more fire alarms were triggered. Alternatively or in addition, the service provider server **240** may determine that hazardous material personnel are required if the gas contamination meets a threshold.

If, at step **1365**, the service provider server **240** determines that one or more emergency personnel are required, the service provider server **240** moves to step **1370**. At step **1370**, the service provider server **240** initiates communication with a communication device of the identified one or more emergency personnel, such as via a voice or data communication.

If, at step **1365**, the service provider server **240** determines that no emergency personnel are required, then the service provider server **240** moves to step **1380**. At step **1380**, the service provider server **240** closes the alarm. For example, the operators who located the user A **120**A may have evacuated the user A **120**A from the contaminated area.

FIG. **14** is a flowchart illustrating high risk area prediction in the system of FIG. **1**, or other systems for relative positioning of access points in a real time locating system. The steps of FIG. **14** are described as being performed by the service provider server **240**. However, the steps may be performed by the processor of the service provider server **240**, or by any other hardware component of the service provider server **240**. Alternatively the steps may be performed by an external hardware component.

At step **1410**, the service provider server **240** may receive sensor data, such as a hazardous gas level, from multiple sensors. The sensors may include sensors within the badges **220**A-N, and/or stationary wireless sensors **375**. At step **1420**, the service provider server **240** may analyze the sensor data. For example, the service provider server **240** may determine whether the level of hazardous gas is increasing or decreasing for each sensor, and may determine the rate of change of the level of hazardous gas for each sensor. At step **1425**, the service provider server **240** may determine whether there has been an increase in the level of hazardous gas for one or more sensors. If, at step **1425**, the service provider server **240** determines that there has not been an increase in any of the gas levels, the service provider server **240** moves to step **1440**. At step **1440**, the service provider server **240** determines there are no predicted high risk areas.

If, at step **1425**, the service provider server **240** determines that there is an increase in the gas levels detected by one or more of the sensors, the service provider server **240** moves to step **1430**. At step **1430**, the service provider server **240** determines the rate of change in the detected gas levels, such as based on the last several measurements received from the sensors. For example, if the gas levels are communicated from the sensors to the service provider server **240** every minute, the service provider server **240** may determine the rate of change over the last five minutes. At step **1450**, the service provider server **240** determines whether the rate of change of the gas levels indicates that dangerous levels of the hazardous gas may be imminent. For example, the service provider server **240** may identify a dangerous level of the hazardous gas and may determine, based on the rate of change in gas levels, whether the levels of the hazardous gas may reach the dangerous level.

If, at step **1450**, the service provider server **240** determines that the rate of change of the gas levels does not indicate that dangerous levels of the gas are imminent, the service provider server **240** moves to step **1440**. At step **1440**, the service provider server **240** determines there are no predicted high risk areas. If, at step **1450**, the service provider server **240** determines the rate of change of the hazardous gas level is indicative of imminent dangerous levels of the hazardous gas, the service provider server **240** moves to step **1455**. At step **1455**, the service provider server **240** determines whether the sensors in proximity to the imminent dangerous levels of the hazardous gas are located indoors or outdoors.

If, at step **1455**, the service provider server **240** determines the sensors are located outdoors, the service provider server **240** moves to step **1470**. At step **1470**, the service provider server **240** determines a predicted flow of the hazardous gas based on data describing the current direction and rate, or strength, of the wind. For example, if the wind is blowing in a southerly direction, then the gas may be likely to move to the south. Alternatively or in addition, the service provider server **240** may utilize historical sensor readings to determine how quickly the direction and rate of the wind may result in a dissipation of the hazardous gas.

If, at step **1455** the service provider server **240** determines that the sensors are located indoors, the service provider server **240** moves to step **1460**. At step **1460**, the service provider server **240** determines a predicted flow, or movement, of the hazardous gas based on historical sensor readings which are indicative of the circulation of the air indoors. For example, the historical progression of a gas through the sensor network can be analyzed by reviewing historical sensor measurements. The service provider server **240** may generate a gas flow model based on the historical sensor data and may use the gas flow model to predict the movement of the hazardous gas.

At step **1480**, the service provider server **240** may identify the users **120**A-N who are located in areas which are predicted to have high levels of the hazardous gas in the near future, such as within the next five minutes, the next ten minutes, or generally any time interval. The users **120**A-N may be identified based on the badges **220**A-N of the users **120**A-N. At step **1490**, the service provider server **240** may transmit a pre-emptive, or pro-active, alarm to the badges **220**A-N of the users **120**A-N who are located in the areas which are predicted to have high levels of hazardous gas in the near future. The users **120**A-N may receive the alerts and may evacuate the high risk areas.

Alternatively or in addition, the service provider server **240** may use the data retrieved from the sensors and the gas flow predictive model to determine which vents to open and/or close, such as to contain the hazardous gas. For example, the service provider server **240** may shut one or more vents to isolate the hazardous gas within a confined area, such as an evacuated room. Alternatively, the service provider server **240** may open vents to provide uncontaminated air to an area with high levels of the hazardous gas.

FIG. **15** is a screenshot of a user interface **1500** for viewing access point coverage of a facility in the system of FIG. **1**, or other systems for relative positioning of access points in a real time locating system. The user interface **1500** may include a map **1510** and one or more coverage indicators **1515**. The coverage indicators **1515** may indicate the level of coverage at each area of the map **1510**. The user interface **1500** may display the coverage of a single access point **360**. Alternatively or in addition, the user interface may simultaneously display the coverage of multiple access points **360**. The user interface **1500** displaying the coverage of an access point **360** may also be referred to as the heatmap of the access point **360**.

In operation, the user interface **1500** may be provided to the operator **110** via the computing device **210**. The operator **110** may use the user interface **1500** to view the coverage of one or more access points **360** in the system **100**. If the user interface **1500** indicates that the coverage of the access points **360** does not satisfy the coverage threshold, then the access points **360** may be re-positioned with the facility.

FIG. **16** is a screenshot of a user interface **1600** for viewing access point coverage of individual access points **360** in the system of FIG. **1**, or other systems for relative positioning of access points in a real time locating system. The user interface **1600** may include a map **1610** and a coverage key **1620**. The map **1610** may include one or more tags **1612** and one or more access points **1614**. The tags **1612** may represent the location of the test tags and the access points **1614** may represent the location of the MAMALs. The tags **1612** and/or access points **1614** may be surrounded by one or more colors. The colors may indicate the level of coverage at the tag **1612** and/or

access point **1614**. The coverage key **1620** may provide a mapping between the colors and the coverage values.

In operation, the user interface **1600** may be provided to the operator **110** via the computing device **210**. The operator **110** may use the user interface **1600** to view the coverage of multiple access points **360** in the system **100**. If the user interface **1600** indicates that the coverage of the access points **360** does not satisfy the coverage threshold, then the access points **360** may be re-positioned with the facility.

FIG. **17** is a screenshot of a user interface for viewing access point locating accuracy in the system of FIG. **1**, or other systems for relative positioning of access points in a real time locating system. The user interface **1700** may include a map **1710** and an accuracy key **1720**. The map **1710** may include one or more accuracy level indicators **1715**, which may be represented by various colored shading on the map **1710**. The colors of the accuracy indicators **1715** may indicate the level of accuracy at various locations on the map **1710**. The accuracy key **1720** may provide a mapping between the colors and the accuracy levels.

In operation, the user interface **1700** may be provided to the operator **110** via the computing device **210**. The operator **110** may use the user interface **1700** to view the coverage of multiple access points **360** in the system **100**. If the user interface **1700** indicates that the accuracy level of the access points **360** does not satisfy the accuracy threshold, then the access points **360** may be re-positioned with the facility.

FIG. **18** is a screenshot of a user interface **1800** displaying a placement analysis report **1805** in the system of FIG. **1**, or other systems for relative positioning of access points in a real time locating system. The placement analysis report **1805** may include one or more sections containing information relating to the positioning of one or more access points. The sections of the placement analysis report may include a test number section **1810**, a recording title section **1820**, a change section **1830**, an access point placement section **1840**, an individual coverage section **1850**, an accuracy section **1860**, a tags not covered section **1870**, a results description **1880**, and an overall coverage and accuracy map section **1890**.

The test number section **1810** may display the number of the RF test under review. For example, the service provider server **240** may assign a unique number to each RF test that is performed. The recording title section **1820** may display the name of the folder where the recording information is stored. The change section **1830** may display a description of an access point **360** that moved between the last test and the current test. For example, the change section **1830** may indicate that access point 1 moved to an elevation of ten feet. The access point placement section **1840** may list each of the access points' relative location on the map. For example, the access point placement section **1840** may list access point 1 as being in the northwest corner by the boiler and access point 2 in the southwest corner on the brick building. The individual access point coverage section **1850** may list if each access point's coverage is within the area. For example, the individual access point coverage section **1850** may include one or more descriptors indicating the quality of the coverage, such as "great,", "good," "ok", or "bad." The "great" descriptor may indicate that the majority of the access points **360** have coverage of at least −65 dBM and at least fifty percent of the work area is covered. The "good" descriptor may indicate that the majority of access points **360** have coverage of at least −75 dBM and at least fifty percent of the work area is covered. The "ok" descriptor may indicate that the majority of access points **360** have coverage of at least −75 dBM and at least twenty-five percent of the work area is covered. The "bad" descriptor may indicate that the majority of access points **360** have coverage of at least −85 dBM and at least twenty-five percent of the work area is covered. The accuracy section **1860** may display the measurement of the overall access point accuracy at 90% RE. The tags not covered section **1870** may display the number of tags not covered by at least three access points **360** at −75 dBm or greater. The results section **1880** may display a recommendation of the RF test's placement of access points and the coverage and accuracy interpretation. The overall coverage and accuracy maps section **1890** may display screenshots of the coverage and accuracy maps, such as those displayed in FIGS. **15-17** above.

FIG. **19** is a screenshot of a user interface **1900** for monitoring the location and gas exposure level of users in the system of FIG. **1**, or other systems for relative positioning of access points in a real time locating system. The user interface **1900** may include a map **1910** and one or more user identifiers **1920**. The user identifiers **1920** may indicate the location of the users **120**A-N in the workplace. Alternatively or in addition, the user identifiers **1920** may also display the amount of gas each user **120**A-N has been exposed to. The user identifiers may change colors based on the amount of gas each user **120**A-N has been exposed to. For example, if a user A **120**A has been exposed to small amounts of gas, the user identifier **1920** of the user A **120**A may be green. Alternatively, if a user B **120**B has been exposed to large amounts of gas, the user identifier **1920** of the user B **120**B may be red. The user identifier **1920** of a user B **120**B who has been exposed to large amounts of gas may also flash or otherwise be displayed visually distinct from the other user identifiers **1920**.

In operation, the user interface **1900** may be provided to the operator **110** via the computing device **210**. The operator **110** may use the user interface **1900** to monitor the location and amount of gas exposure of the users **120**A-N. The operator **110** may use the user interface **1500** to initiate a manual alarm for one or more users **120**A-N. The alarm may be transmitted to the gas detection and locating device **220**A-N of the users **120**A-N by the service provider server **240**. For example, if the operator **110** identifies a reason the users **120**A-N should be evacuated, such as a tornado or other weather related issue, the operator **110** may initiate a manual alarm. Alternatively or in addition, the service provider server **240** may be in communication with one or more third party servers **250** which provide severe weather alerts. The service provider server **240** may automatically initiate an alarm for all of the users **120**A-N if the service provider server **240** receives indication of imminent severe weather, such as a tornado or flood.

Alternatively or in addition, when an alarm is received, the user interface **1900** may be provided to a mobile device of one or more operators located within the vicinity of the user A **120**A associated with the alarm. The operators may use the user interface **1900** to locate the user A **120**A. Alternatively or in addition, the user interface **1900** may display directions to each operator to locate the user A **120**A based on the current location of each operator. Alternatively or in addition, the mobile device of each operator may provide audible directions to each operator.

Alternatively or in addition, if a "man down" alarm is received for a user A **120**A, the user interface **1900** may be configured to quickly open and zoom to the location of the user A **120**A. Alternatively or in addition, the user interface **1900** may be used to view a simulation of the effect of a gas leak, or gas cloud, on the work area. The user interface **1900** may also include time on tools calculation, which may provide a maintenance productivity calculation.

FIG. **20** is a screenshot of a user interface **2000** for monitoring gas exposure levels in the system of FIG. **1**, or other systems for relative positioning of access points in a real time

locating system. The user interface **2000** may include a selection interface **2010** and a gas level display **2020**. The gas level display **2020** may include one or more gas sensors **2025**. The selection interface **2010** may allow the user A **120**A to select one or more options, or filters, which may affect the format or display of the gas levels on the gas level display **2020**. The gas level display **2020** may display the location of the gas sensors **2025** and the levels of gas detected by the sensors. The sensors may be standalone sensors **375**, or may be badges **220**A-N. Since the badges **220**A-N also contain location data, the gas levels displayed on the gas level display **2020** may be updated as the users **120**A-N move throughout the workplace.

FIG. **21** is a screenshot of a user interface **2100** for monitoring the location and gas exposure level of users using a positioning system in the system of FIG. **1**, or other systems for relative positioning of access points in a real time locating system. The user interface **2100** may include a map display **2110**, a user A **120**A, and a workplace **2130**. The user interface **2100** may be provided to the operator **110**, such as through the computing device **210**.

In operation, the operator **110** may use the map display **2110** to view the location of the users **120**A-N outside of the workplace **2130**. The users **120**A-N may be located remotely from the workplace **2130**, or may be located in an area of the workplace outside of the sensor network. The service provider server **240** may utilize positioning data, such as GPS data, received from the gas detection and locating devices **220**A-N to identify the geographic location of each of the users **120**A-N and assets. Alternatively or in addition, if the user A **120**A is located out of range of the positioning system satellites, the service provider server **240** may receive location information from the wireless location server **260**, from third party programs or servers, such as GOOGLE LATITUDE™, or from cellular phone towers, such as by triangulating signals of cellular phone towers in communication with the badge **220**A of the user A **120**A. The map display **2110** may also include one or more metrics related to the user A **120**A, such as level of gas exposure, location, biometric information, such as heart rate or blood pressure, or generally any other information which may describe the selected user A **120**A or asset. Alternatively or in addition, the user interface **2100** may be used for mustering either thru integrating Lenel or through Exciter use.

FIG. **22** illustrates a general computer system **2200**, which may represent a service provider server **240**, a gas detection and location device **220**A-N, **500**A, **500**B, a computing device **210**, a wireless location server **260**, a third party server **250**, a MAMAL **600**, **700**, or any of the other computing devices referenced herein. The computer system **2200** may include a set of instructions **2224** that may be executed to cause the computer system **2200** to perform any one or more of the methods or computer based functions disclosed herein. The computer system **2200** may operate as a standalone device or may be connected, e.g., using a network, to other computer systems or peripheral devices.

In a networked deployment, the computer system may operate in the capacity of a server or as a client user computer in a server-client user network environment, or as a peer computer system in a peer-to-peer (or distributed) network environment. The computer system **2200** may also be implemented as or incorporated into various devices, such as a personal computer (PC), a tablet PC, a set-top box (STB), a personal digital assistant (PDA), a mobile device, a palmtop computer, a laptop computer, a desktop computer, a communications device, a wireless telephone, a land-line telephone, a control system, a camera, a scanner, a facsimile machine, a printer, a pager, a personal trusted device, a web appliance, a network router, switch or bridge, or any other machine capable of executing a set of instructions **2224** (sequential or otherwise) that specify actions to be taken by that machine. In a particular embodiment, the computer system **2200** may be implemented using electronic devices that provide voice, video or data communication. Further, while a single computer system **2200** may be illustrated, the term "system" shall also be taken to include any collection of systems or subsystems that individually or jointly execute a set, or multiple sets, of instructions to perform one or more computer functions.

As illustrated in FIG. **22**, the computer system **2200** may include a processor **2202**, such as, a central processing unit (CPU), a graphics processing unit (GPU), or both. The processor **2202** may be a component in a variety of systems. For example, the processor **2202** may be part of a standard personal computer or a workstation. The processor **2202** may be one or more general processors, digital signal processors, application specific integrated circuits, field programmable gate arrays, servers, networks, digital circuits, analog circuits, combinations thereof, or other now known or later developed devices for analyzing and processing data. The processor **2202** may implement a software program, such as code generated manually (i.e., programmed).

The computer system **2200** may include a memory **2204** that can communicate via a bus **2208**. The memory **2204** may be a main memory, a static memory, or a dynamic memory. The memory **2204** may include, but may not be limited to computer readable storage media such as various types of volatile and non-volatile storage media, including but not limited to random access memory, read-only memory, programmable read-only memory, electrically programmable read-only memory, electrically erasable read-only memory, flash memory, magnetic tape or disk, optical media and the like. In one case, the memory **2204** may include a cache or random access memory for the processor **2202**. Alternatively or in addition, the memory **2204** may be separate from the processor **2202**, such as a cache memory of a processor, the system memory, or other memory. The memory **2204** may be an external storage device or database for storing data. Examples may include a hard drive, compact disc ("CD"), digital video disc ("DVD"), memory card, memory stick, floppy disc, universal serial bus ("USB") memory device, or any other device operative to store data. The memory **2204** may be operable to store instructions **2224** executable by the processor **2202**. The functions, acts or tasks illustrated in the figures or described herein may be performed by the programmed processor **2202** executing the instructions **2224** stored in the memory **2204**. The functions, acts or tasks may be independent of the particular type of instructions set, storage media, processor or processing strategy and may be performed by software, hardware, integrated circuits, firmware, micro-code and the like, operating alone or in combination. Likewise, processing strategies may include multiprocessing, multitasking, parallel processing and the like.

The computer system **2200** may further include a display **2214**, such as a liquid crystal display (LCD), an organic light emitting diode (OLED), a flat panel display, a solid state display, a cathode ray tube (CRT), a projector, a printer or other now known or later developed display device for outputting determined information. The display **2214** may act as an interface for the user to see the functioning of the processor **2202**, or specifically as an interface with the software stored in the memory **2204** or in the drive unit **2206**.

Additionally, the computer system **2200** may include an input device **2212** configured to allow a user to interact with any of the components of system **2200**. The input device **2212**

may be a number pad, a keyboard, or a cursor control device, such as a mouse, or a joystick, touch screen display, remote control or any other device operative to interact with the system **2200**.

The computer system **2200** may also include a disk or optical drive unit **2206**. The disk drive unit **2206** may include a computer-readable medium **2222** in which one or more sets of instructions **2224**, e.g. software, can be embedded. Further, the instructions **2224** may perform one or more of the methods or logic as described herein. The instructions **2224** may reside completely, or at least partially, within the memory **2204** and/or within the processor **2202** during execution by the computer system **2200**. The memory **2204** and the processor **2202** also may include computer-readable media as discussed above.

The present disclosure contemplates a computer-readable medium **2222** that includes instructions **2224** or receives and executes instructions **2224** responsive to a propagated signal; so that a device connected to a network **235** may communicate voice, video, audio, images or any other data over the network **235**. Further, the instructions **2224** may be transmitted or received over the network **235** via a communication interface **2218**. The communication interface **2218** may be a part of the processor **2202** or may be a separate component. The communication interface **2218** may be created in software or may be a physical connection in hardware. The communication interface **2218** may be configured to connect with a network **235**, external media, the display **2214**, or any other components in system **2200**, or combinations thereof. The connection with the network **235** may be a physical connection, such as a wired Ethernet connection or may be established wirelessly as discussed below. Likewise, the additional connections with other components of the system **2200** may be physical connections or may be established wirelessly. In the case of a service provider server **240**, the service provider server may communicate with users **120**A-N through the communication interface **2218**.

The network **235** may include wired networks, wireless networks, or combinations thereof. The wireless network may be a cellular telephone network, an 802.11, 802.16, 802.20, or WiMax network. Further, the network **235** may be a public network, such as the Internet, a private network, such as an intranet, or combinations thereof, and may utilize a variety of networking protocols now available or later developed including, but not limited to TCP/IP based networking protocols.

The computer-readable medium **2222** may be a single medium, or the computer-readable medium **2222** may be a single medium or multiple media, such as a centralized or distributed database, and/or associated caches and servers that store one or more sets of instructions. The term "computer-readable medium" may also include any medium that may be capable of storing, encoding or carrying a set of instructions for execution by a processor or that may cause a computer system to perform any one or more of the methods or operations disclosed herein.

The computer-readable medium **2222** may include a solid-state memory such as a memory card or other package that houses one or more non-volatile read-only memories. The computer-readable medium **2222** also may be a random access memory or other volatile re-writable memory. Additionally, the computer-readable medium **2222** may include a magneto-optical or optical medium, such as a disk or tapes or other storage device to capture carrier wave signals such as a signal communicated over a transmission medium. A digital file attachment to an e-mail or other self-contained information archive or set of archives may be considered a distribution medium that may be a tangible storage medium. Accordingly, the disclosure may be considered to include any one or more of a computer-readable medium or a distribution medium and other equivalents and successor media, in which data or instructions may be stored.

Alternatively or in addition, dedicated hardware implementations, such as application specific integrated circuits, programmable logic arrays and other hardware devices, may be constructed to implement one or more of the methods described herein. Applications that may include the apparatus and systems of various embodiments may broadly include a variety of electronic and computer systems. One or more embodiments described herein may implement functions using two or more specific interconnected hardware modules or devices with related control and data signals that may be communicated between and through the modules, or as portions of an application-specific integrated circuit. Accordingly, the present system may encompass software, firmware, and hardware implementations.

The methods described herein may be implemented by software programs executable by a computer system. Further, implementations may include distributed processing, component/object distributed processing, and parallel processing. Alternatively or in addition, virtual computer system processing maybe constructed to implement one or more of the methods or functionality as described herein.

Although components and functions are described that may be implemented in particular embodiments with reference to particular standards and protocols, the components and functions are not limited to such standards and protocols. For example, standards for Internet and other packet switched network transmission (e.g., TCP/IP, UDP/IP, HTML, HTTP) represent examples of the state of the art. Such standards are periodically superseded by faster or more efficient equivalents having essentially the same functions. Accordingly, replacement standards and protocols having the same or similar functions as those disclosed herein are considered equivalents thereof.

The illustrations described herein are intended to provide a general understanding of the structure of various embodiments. The illustrations are not intended to serve as a complete description of all of the elements and features of apparatus, processors, and systems that utilize the structures or methods described herein. Many other embodiments may be apparent to those of skill in the art upon reviewing the disclosure. Other embodiments may be utilized and derived from the disclosure, such that structural and logical substitutions and changes may be made without departing from the scope of the disclosure. Additionally, the illustrations are merely representational and may not be drawn to scale. Certain proportions within the illustrations may be exaggerated, while other proportions may be minimized. Accordingly, the disclosure and the figures are to be regarded as illustrative rather than restrictive.

The above disclosed subject matter is to be considered illustrative, and not restrictive, and the appended claims are intended to cover all such modifications, enhancements, and other embodiments, which fall within the true spirit and scope of the description. Thus, to the maximum extent allowed by law, the scope is to be determined by the broadest permissible interpretation of the following claims and their equivalents, and shall not be restricted or limited by the foregoing detailed description.

The invention claimed is:

1. An apparatus comprising:

a communication interface configured to receive an alarm signal from a gas sensor unit in response to a detection of

a gas concentration measured by the gas sensor unit or an activation of a panic button in communication with the gas sensor unit;

a processor configured to identify a location of the gas sensor unit in a work area;

a display unit configured to display the location of the gas sensor unit in a map of the work area;

the display unit configured to display a location of a user in a vicinity of the location of the gas sensor unit based on a location of a device of the user; and

the processor configured to determine a distance of the user from the location of the gas sensor unit based on the location of the device of the user and transmit, via the communication interface:

an alert signal to the device associated with the user, and the location of the gas sensor unit to the device of the user automatically, in response to the determined distance being within a threshold range of the gas sensor unit.

2. The apparatus of claim **1**, wherein the gas sensor unit is one of a stationary gas sensor unit or a portable gas sensor unit associated with another user.

3. The apparatus of claim **1**, wherein the vicinity of the location of the gas sensor unit is based on a predetermined distance from the location of the gas sensor unit.

4. The apparatus of claim **1**, wherein the alarm signal is received in response to the detection of the gas concentration beyond a predetermined threshold by the gas sensor unit.

5. The apparatus of claim **1**, wherein the display unit is further configured to:

display, on a display device, the gas concentration measured by the gas sensor unit; and

prompt, on the display device, for an operator to determine whether to transmit the indication of the alert signal to a device of a second user.

6. The apparatus of claim **5**, wherein the device of the second user is a mobile sensor device associated with the second user.

7. The apparatus of claim **1**, wherein the gas sensor unit is a mobile device associated with the user.

8. An apparatus comprising:

a communication interface configured to receive an alarm signal from a gas sensor unit in response to a detection of a gas concentration measured by the gas sensor unit or an activation of a panic button in communication with the gas sensor unit;

a processor configured to identify a location of the gas sensor unit in a work area;

a display unit configured to display the location of the gas sensor unit in a map of the work area;

the display unit configured to display a location of a user in a vicinity of the location of the gas sensor unit based on a location of a device of the user; and

the processor configured to transmit, via the communication interface:

an alert signal to the device associated with the user, and the location of the gas sensor unit to the device of the user, and wherein the processor is configured to:

receive a user instruction to transmit the alert signal to the user; and

transmit the alert signal and the location of the gas sensor unit to the device of the user.

9. The apparatus of claim **8**, wherein the alarm signal is received in response to the detection of the gas concentration beyond a predetermined threshold by the gas sensor unit.

10. The apparatus of claim **8**, wherein the display unit is further configured to:

display, on a display device, the gas concentration measured by the gas sensor unit; and

prompt, on the display device, for an operator to determine whether to transmit the indication of the alert signal to a device of a second user.

11. The apparatus of claim **8**, wherein the gas sensor unit is a mobile device.

12. An apparatus comprising:

a communication interface configured to receive an alarm signal from a gas sensor unit in response to a detection of a gas concentration measured by the gas sensor unit or an activation of a panic button in communication with the gas sensor unit;

a processor configured to identify a location of the gas sensor unit in a work area;

a display unit configured to display the location of the gas sensor unit in a map of the work area;

the display unit configured to display a location of a user in a vicinity of the location of the gas sensor unit based on a location of a device of the user; and

the processor configured to transmit, via the communication interface:

an alert signal to the device associated with the user, and the location of the gas sensor unit to the device of the user,

wherein the user is a first user, and:

the display unit is further configured to display a second user in the vicinity of the location of the gas sensor unit based on a location of a device of the second user; and

the processor is further configured to:

receive a selection of the second user to receive the alert signal; and

transmit the alert signal and the location of the gas sensor unit to the device of the second user.

13. The apparatus of claim **12**, wherein the gas sensor unit is a mobile device associated with the first user.

14. The apparatus of claim **12**, wherein the device of the second user is a mobile device associated with the second user.

15. A system comprising:

a plurality of hazard detection units in a work area; and

a controller configured to monitor hazardous conditions in the work area,

the controller being configured to receive, from a first hazard detection unit of the plurality of hazard detection units, an alarm and a location of the first hazard detection unit, in response to the first hazard detection unit's detection of a predetermined hazardous condition, the first hazard being in a work zone of the work area;

the controller configured to identify a second hazard detection unit of the plurality of hazard detection units within the work zone in which the first hazard detection unit is, and transmit to the second hazard detection unit a request to check the safety of a user of the first hazard detection unit, wherein

the predetermined hazardous condition is a concentration of gas in a hazardous range; and

the controller is further configured to receive, from the second hazard detection unit, a concentration of the gas detected by the second hazard detection unit.

16. The system of claim **15**, wherein the controller is further configured to request an emergency response at the location of the first hazard detection unit based on the concentration of gas detected by the second hazard detection unit.

17. The system of claim **15**, wherein the controller is further configured to receive, from the second hazard detection unit, an indication of whether an emergency responder should be contacted.

18. The system of claim **17**, wherein the controller is further configured to initiate communication with a communication device of the emergency responder in response to the indication that the emergency responder should be contacted.

19. The system of claim **15**, wherein the first hazard detection unit is a mobile device associated with the user.

20. The system of claim **15**, wherein the second hazard detection unit is a mobile device associated with a second user.

* * * * *