US009191634B2

(12) **United States Patent**
Schofield et al.

(10) **Patent No.: US 9,191,634 B2**
(45) **Date of Patent: *Nov. 17, 2015**

(54) **VISION SYSTEM FOR VEHICLE**

(71) Applicant: **MAGNA ELECTRONICS INC.**, Auburn Hills, MI (US)

(72) Inventors: **Kenneth Schofield**, Holland, MI (US); **Niall R. Lynam**, Holland, MI (US)

(73) Assignee: **MAGNA ELECTRONICS INC.**, Auburn Hills, MI (US)

(*) Notice: Subject to any disclaimer, the term of this patent is extended or adjusted under 35 U.S.C. 154(b) by 0 days.

This patent is subject to a terminal disclaimer.

(21) Appl. No.: **14/678,146**

(22) Filed: **Apr. 3, 2015**

(65) **Prior Publication Data**

US 2015/0215588 A1 Jul. 30, 2015

Related U.S. Application Data

(63) Continuation of application No. 14/467,296, filed on Aug. 25, 2014, now Pat. No. 9,008,369, which is a continuation of application No. 14/082,577, filed on Nov. 18, 2013, now Pat. No. 8,818,042, which is a

(Continued)

(51) **Int. Cl.**
G06K 9/00 (2006.01)
H04N 7/18 (2006.01)

(Continued)

(52) **U.S. Cl.**
CPC ***H04N 7/183*** (2013.01); ***B60R 1/001*** (2013.01); ***G06K 9/00798*** (2013.01); ***G06K 9/00818*** (2013.01); ***G06K 9/209*** (2013.01); ***H04N 7/18*** (2013.01)

(58) **Field of Classification Search**
USPC 382/100, 103–104, 106–107, 113, 382/121–123, 154, 162, 170, 178, 181, 172, 382/190, 194, 199, 232, 254, 285, 295, 305, 382/319, 274, 203, 312; 701/1, 38, 93; 348/168, 211.3; 340/435, 815.4, 425.5, 340/440, 905, 309
See application file for complete search history.

(56) **References Cited**

U.S. PATENT DOCUMENTS

1,472,509 A 10/1923 Bitter
2,074,251 A 3/1937 Braun

(Continued)

FOREIGN PATENT DOCUMENTS

AT 519193 8/2011
AU 611418 4/1984

(Continued)

OTHER PUBLICATIONS

"Desert Storm technology comes to the suburban drive to work", Oct. 17, 1991.

(Continued)

Primary Examiner — Seyed Azarian
(74) *Attorney, Agent, or Firm* — Gardner, Linn, Burkhart & Flory, LLP

(57) **ABSTRACT**

A vision system for a vehicle includes a forward facing camera having a forward field of view through the vehicle windshield and operable to capture image data for a plurality of driver assistance systems of the vehicle. The plurality of driver assistance systems of the vehicle includes a lane departure warning system of the vehicle and at least two other driver assistance systems. Responsive at least in part to processing by an image processor of captured image data, a lane of a road along which the vehicle is traveling may determined, an oncoming vehicle approaching the vehicle may be detected, lane markers of the road lane along which the equipped vehicle is traveling may be detected, road curvature information may be extracted, and/or a surface property of the road being travelled by the equipped vehicle may be detected.

19 Claims, 4 Drawing Sheets

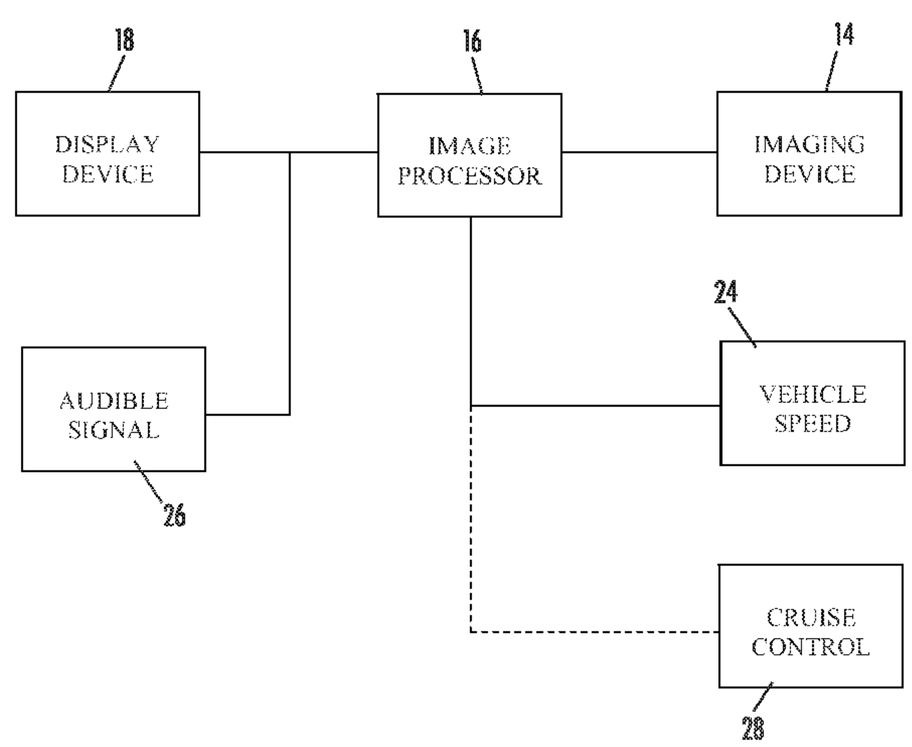

Related U.S. Application Data

continuation of application No. 13/689,796, filed on Nov. 30, 2012, now Pat. No. 8,593,521, which is a continuation of application No. 13/335,125, filed on Dec. 22, 2011, now Pat. No. 8,325,986, which is a continuation of application No. 13/107,318, filed on May 13, 2011, now Pat. No. 8,090,153, which is a continuation of application No. 12/979,499, filed on Dec. 28, 2010, now Pat. No. 7,949,152, which is a continuation of application No. 12/856,737, filed on Aug. 16, 2010, now Pat. No. 7,873,187, which is a continuation of application No. 12/606,476, filed on Oct. 27, 2009, now Pat. No. 7,792,329, which is a continuation of application No. 12/429,605, filed on Apr. 24, 2009, now Pat. No. 7,616,781, which is a continuation of application No. 11/105,757, filed on Apr. 14, 2005, now Pat. No. 7,526,103.

(60) Provisional application No. 60/644,903, filed on Jan. 19, 2005, provisional application No. 60/642,227, filed on Jan. 7, 2005, provisional application No. 60/607,963, filed on Sep. 8, 2004, provisional application No. 60/562,480, filed on Apr. 15, 2004.

(51) **Int. Cl.**

G06K 9/20	(2006.01)
B60R 1/00	(2006.01)
H04N 5/232	(2006.01)

(56) **References Cited**

U.S. PATENT DOCUMENTS

2,148,119	A	2/1939	Grist
2,240,843	A	5/1941	Gillespie
2,317,400	A	4/1943	Paulus et al.
2,331,144	A	10/1943	Sitter
2,339,291	A	1/1944	Paulus et al.
2,424,288	A	7/1947	Severy
2,598,420	A	5/1952	Onksen, Jr. et al.
2,632,040	A	3/1953	Rabinow
2,827,594	A	3/1953	Rabinow
2,750,583	A	6/1956	McCullough
2,762,932	A	9/1956	Falge
2,907,920	A	10/1956	McIlvane
2,855,523	A	10/1958	Berger
2,856,146	A	10/1958	Lehder
2,863,064	A	12/1958	Rabinow
2,892,094	A	6/1959	Lehovec
2,912,593	A	11/1959	Deuth
2,934,676	A	4/1960	Miller
2,959,709	A	11/1960	Vanaman et al.
3,008,532	A	11/1961	Reed
3,011,580	A	12/1961	Reid
3,085,646	A	4/1963	Paufve
3,158,835	A	11/1964	Hipkins
3,172,496	A	3/1965	Rabinow et al.
3,201,750	A	8/1965	Morin
3,208,070	A	9/1965	Boicey
3,249,761	A	5/1966	Baumanns
3,271,577	A	9/1966	Miller et al.
3,325,680	A	6/1967	Amacher
3,367,616	A	2/1968	Bausch et al.
3,486,066	A	12/1969	Jones et al.
3,515,472	A	6/1970	Schwitzgebel
3,572,428	A	3/1971	Monaco
3,623,671	A	11/1971	Hargroves
3,673,560	A	6/1972	Barsh et al.
3,680,951	A	8/1972	Jordan et al.
3,689,695	A	9/1972	Rosenfield et al.
3,708,668	A	1/1973	Tilley
3,751,711	A	8/1973	Schick
3,845,572	A	11/1974	McCanney
3,876,940	A	4/1975	Wickord et al.
3,971,065	A	7/1976	Bayer
3,985,424	A	10/1976	Steinacher
3,986,022	A	10/1976	Hyatt
4,003,445	A	1/1977	De Bruine
4,037,134	A	7/1977	Loper
4,044,853	A	8/1977	Melke
4,049,961	A	9/1977	Marcy
4,058,796	A	11/1977	Oishi et al.
4,093,364	A	6/1978	Miller
4,127,778	A	11/1978	Leitz
4,139,801	A	2/1979	Linares
4,143,264	A	3/1979	Gilbert et al.
4,176,728	A	12/1979	Otteblad et al.
4,200,361	A	4/1980	Malvano et al.
4,209,853	A	6/1980	Hyatt
4,214,266	A	7/1980	Myers
4,218,698	A	8/1980	Bart et al.
4,236,099	A	11/1980	Rosenblum
4,238,778	A	12/1980	Ohsumi
4,247,870	A	1/1981	Gabel et al.
4,249,160	A	2/1981	Chilvers
4,254,931	A	3/1981	Aikens et al.
4,257,703	A	3/1981	Goodrich
4,266,856	A	5/1981	Wainwright
4,277,804	A	7/1981	Robison
4,278,142	A	7/1981	Kono
4,281,898	A	8/1981	Ochiai
4,288,814	A	9/1981	Talley et al.
RE30,835	E	12/1981	Giglia
4,348,652	A	9/1982	Barnes et al.
4,348,653	A	9/1982	Tsuzuki et al.
4,355,271	A	10/1982	Noack
4,357,558	A	11/1982	Massoni et al.
4,357,594	A	11/1982	Ehrlich et al.
4,381,888	A	5/1983	Momiyama
4,389,537	A	6/1983	Tsunoda et al.
4,389,639	A	6/1983	Torii et al.
4,390,742	A	6/1983	Wideman
4,390,895	A	6/1983	Sato et al.
4,401,181	A	8/1983	Schwarz
4,403,208	A	9/1983	Hodgson et al.
4,420,238	A	12/1983	Felix
4,431,896	A	2/1984	Lodetti
4,441,125	A	4/1984	Parkinson
4,443,057	A	4/1984	Bauer et al.
4,460,831	A	7/1984	Oettinger et al.
4,464,789	A	8/1984	Sternberg
4,471,228	A	9/1984	Nishizawa et al.
4,481,450	A	11/1984	Watanabe et al.
4,483,011	A	11/1984	Brown
4,485,402	A	11/1984	Searby
4,491,390	A	1/1985	Tong-Shen
4,495,589	A	1/1985	Hirzel
4,512,637	A	4/1985	Ballmer
4,521,804	A	6/1985	Bendell
4,529,275	A	7/1985	Ballmer
4,529,873	A	7/1985	Ballmer et al.
4,532,550	A	7/1985	Bendell et al.
4,538,181	A	8/1985	Taylor
4,546,551	A	10/1985	Franks
4,549,208	A	10/1985	Kamejima et al.
4,564,833	A	1/1986	Seko et al.
4,566,032	A	1/1986	Hirooka et al.
4,571,082	A	2/1986	Downs
4,572,619	A	2/1986	Reininger et al.
4,580,875	A	4/1986	Bechtel et al.
4,587,522	A	5/1986	Warren
4,588,041	A	5/1986	Tsuchihashi
4,599,544	A	7/1986	Martin
4,600,913	A	7/1986	Caine
4,601,053	A	7/1986	Grumet
4,603,946	A	8/1986	Kato et al.
4,614,415	A	9/1986	Hyatt
4,620,141	A	10/1986	McCumber
4,623,222	A	11/1986	Ito et al.
4,625,329	A	11/1986	Ishikawa et al.
4,626,850	A	12/1986	Chey
4,629,941	A	12/1986	Ellis et al.

(56) **References Cited**

U.S. PATENT DOCUMENTS

4,630,109 A 12/1986 Barton
4,632,509 A 12/1986 Ohmi et al.
4,638,287 A 1/1987 Umebayashi et al.
4,645,320 A 2/1987 Muelling et al.
4,645,975 A 2/1987 Meitzler et al.
4,647,161 A 3/1987 Müller
4,647,975 A 3/1987 Alston et al.
4,653,316 A 3/1987 Fukuhara
4,665,321 A 5/1987 Chang et al.
4,669,825 A 6/1987 Itoh et al.
4,671,614 A 6/1987 Catalano
4,671,615 A 6/1987 Fukada et al.
4,672,457 A 6/1987 Hyatt
4,676,601 A 6/1987 Itoh et al.
4,679,077 A 7/1987 Yuasa et al.
4,681,431 A 7/1987 Sims et al.
4,688,085 A 8/1987 Imaide
4,690,508 A 9/1987 Jacob
4,692,798 A 9/1987 Seko et al.
4,697,883 A 10/1987 Suzuki et al.
4,699,484 A 10/1987 Howell et al.
4,701,022 A 10/1987 Jacob
4,701,613 A 10/1987 Watanabe et al.
4,713,685 A 12/1987 Nishimura et al.
4,717,830 A 1/1988 Botts
4,727,290 A 2/1988 Smith et al.
4,728,804 A 3/1988 Norsworthy
4,731,669 A 3/1988 Hayashi et al.
4,731,769 A 3/1988 Schaefer et al.
4,741,603 A 5/1988 Miyagi et al.
4,755,664 A 7/1988 Holmes et al.
4,758,883 A 7/1988 Kawahara et al.
4,768,135 A 8/1988 Kretschmer et al.
4,772,942 A 9/1988 Tuck
4,779,095 A 10/1988 Guerreri
4,785,280 A 11/1988 Fubini et al.
4,789,904 A 12/1988 Peterson
4,793,690 A 12/1988 Gahan et al.
4,799,267 A 1/1989 Kamejima et al.
4,805,015 A 2/1989 Copeland
4,816,828 A 3/1989 Feher
4,817,948 A 4/1989 Simonelli
4,820,933 A 4/1989 Hong
4,825,232 A 4/1989 Howdle
4,833,469 A 5/1989 David
4,833,534 A 5/1989 Paff et al.
4,838,650 A 6/1989 Stewart et al.
4,839,749 A 6/1989 Franklin
4,841,348 A 6/1989 Shizukuishi et al.
4,843,463 A 6/1989 Michetti
4,847,489 A 7/1989 Dietrich
4,847,772 A 7/1989 Michalopoulos et al.
4,849,731 A 7/1989 Melocik
4,855,822 A 8/1989 Narendra et al.
4,859,031 A 8/1989 Berman et al.
4,862,037 A 8/1989 Farber et al.
4,863,130 A 9/1989 Marks, Jr.
4,867,561 A 9/1989 Makino et al.
4,871,917 A 10/1989 O'Farrell et al.
4,872,051 A 10/1989 Dye
4,881,019 A 11/1989 Shiraishi et al.
4,882,466 A 11/1989 Friel
4,882,565 A 11/1989 Gallmeyer
4,883,349 A 11/1989 Mittelhauser
4,884,055 A 11/1989 Memmola
4,886,960 A 12/1989 Molyneux et al.
4,891,559 A 1/1990 Matsumoto et al.
4,892,345 A 1/1990 Rachael
4,895,790 A 1/1990 Swanson et al.
4,896,030 A 1/1990 Miyaji
4,899,296 A 2/1990 Khattak
4,900,133 A 2/1990 Berman
4,905,151 A 2/1990 Weiman et al.
4,906,940 A 3/1990 Greene et al.
4,907,870 A 3/1990 Brucker
4,910,591 A 3/1990 Petrossian et al.
4,916,374 A 4/1990 Schierbeek et al.
4,917,477 A 4/1990 Bechtel et al.
4,926,346 A 5/1990 Yokoyama
4,930,742 A 6/1990 Schofield et al.
4,931,937 A 6/1990 Kakinami et al.
4,936,533 A 6/1990 Adams et al.
4,937,796 A 6/1990 Tendler
4,948,246 A 8/1990 Shigematsu
4,949,186 A 8/1990 Peterson
4,953,305 A 9/1990 Van Lente et al.
4,954,962 A 9/1990 Evans et al.
4,956,591 A 9/1990 Schierbeek et al.
4,961,625 A 10/1990 Wood et al.
4,963,788 A 10/1990 King et al.
4,966,441 A 10/1990 Conner
4,967,319 A 10/1990 Seko
4,970,509 A 11/1990 Kissinger
4,970,589 A 11/1990 Hanson
4,970,653 A 11/1990 Kenue
4,971,405 A 11/1990 Hwang
4,971,430 A 11/1990 Lynas
4,974,078 A 11/1990 Tsai
4,975,703 A 12/1990 Delisle et al.
4,985,847 A 1/1991 Shioya et al.
4,987,357 A 1/1991 Masaki
4,987,410 A 1/1991 Berman et al.
4,991,054 A 2/1991 Walters
5,001,558 A 3/1991 Burley et al.
5,003,288 A 3/1991 Wilhelm
5,003,339 A 3/1991 Kikuchi et al.
5,008,739 A 4/1991 D'Luna et al.
5,008,946 A 4/1991 Ando
5,012,082 A 4/1991 Watanabe
5,012,092 A 4/1991 Kobayashi
5,012,335 A 4/1991 Cohodar
5,016,977 A 5/1991 Baude et al.
5,020,114 A 5/1991 Fujioka et al.
5,027,001 A 6/1991 Torbert
5,027,104 A 6/1991 Reid
5,027,200 A 6/1991 Petrossian et al.
5,031,101 A 7/1991 Kamimura et al.
5,036,437 A 7/1991 Macks
5,044,706 A 9/1991 Chen
5,044,956 A 9/1991 Behensky et al.
5,050,966 A 9/1991 Berman
5,051,906 A 9/1991 Evans, Jr. et al.
5,055,668 A 10/1991 French
5,059,877 A 10/1991 Teder
5,059,947 A 10/1991 Chen
5,063,603 A 11/1991 Burt
5,064,274 A 11/1991 Alten
5,072,154 A 12/1991 Chen
5,075,768 A 12/1991 Wirtz et al.
5,080,207 A 1/1992 Horneffer
5,080,309 A 1/1992 Ivins
5,081,585 A 1/1992 Kurami et al.
5,086,253 A 2/1992 Lawler
5,086,510 A 2/1992 Guenther et al.
5,087,969 A 2/1992 Kamada et al.
5,096,287 A 3/1992 Kakinami et al.
5,097,362 A 3/1992 Lynas
5,100,093 A 3/1992 Rawlinson
5,101,351 A 3/1992 Hattori
5,111,289 A 5/1992 Lucas et al.
5,113,721 A 5/1992 Polly
5,115,398 A 5/1992 De Jong
5,121,200 A 6/1992 Choi
5,122,957 A 6/1992 Hattori
5,124,549 A 6/1992 Michaels et al.
5,128,769 A 7/1992 Ari
5,130,709 A 7/1992 Toyama et al.
5,133,605 A 7/1992 Nakamura
5,137,238 A 8/1992 Hutten
5,139,327 A 8/1992 Tanaka
5,144,685 A 9/1992 Nasar et al.
5,146,340 A 9/1992 Dickerson
5,148,014 A 9/1992 Lynam
5,153,760 A 10/1992 Ahmed

(56) **References Cited**

U.S. PATENT DOCUMENTS

5,155,426 A 10/1992 Kurami
5,155,775 A 10/1992 Brown
5,159,557 A 10/1992 Ogawa
5,160,780 A 11/1992 Ono et al.
5,160,971 A 11/1992 Koshizawa et al.
5,161,632 A 11/1992 Asayama et al.
5,162,841 A 11/1992 Terashita
5,162,861 A 11/1992 Tamburino
5,163,002 A 11/1992 Kurami
5,165,108 A 11/1992 Asayama
5,166,681 A 11/1992 Bottesch et al.
5,168,355 A 12/1992 Asayama
5,168,378 A 12/1992 Black et al.
5,170,374 A 12/1992 Shimohigashi et al.
5,172,235 A 12/1992 Wilm et al.
5,172,317 A 12/1992 Asanuma et al.
5,173,881 A 12/1992 Sindle
5,177,462 A 1/1993 Kajiwara
5,177,606 A 1/1993 Koshizawa
5,177,685 A 1/1993 Davis et al.
5,182,502 A 1/1993 Slotkowski et al.
5,184,956 A 2/1993 Langlais et al.
5,185,812 A 2/1993 Yamashita et al.
5,187,383 A 2/1993 Taccetta et al.
5,189,561 A 2/1993 Hong
5,193,000 A 3/1993 Lipton et al.
5,193,029 A 3/1993 Schofield et al.
5,193,894 A 3/1993 Lietar et al.
5,204,536 A 4/1993 Vardi
5,204,778 A 4/1993 Bechtel
5,208,701 A 5/1993 Maeda
5,208,750 A 5/1993 Kurami et al.
5,212,468 A 5/1993 Adell
5,214,408 A 5/1993 Asayama
5,216,408 A 6/1993 Shirakawa
5,218,414 A 6/1993 Kajiwara et al.
5,220,508 A 6/1993 Ninomiya et al.
5,223,814 A 6/1993 Suman
5,223,907 A 6/1993 Asayama
5,225,827 A 7/1993 Persson
5,229,941 A 7/1993 Hattori
5,230,400 A 7/1993 Kakinami et al.
5,231,379 A 7/1993 Wood et al.
5,233,527 A 8/1993 Shinnosuke
5,234,070 A 8/1993 Noah et al.
5,235,178 A 8/1993 Hegyi
5,237,249 A 8/1993 Levers
5,243,524 A 9/1993 Ishida et al.
5,245,422 A 9/1993 Borcherts et al.
5,246,193 A 9/1993 Faidley
5,249,126 A 9/1993 Hattori
5,249,128 A 9/1993 Markandey et al.
5,249,157 A 9/1993 Taylor
5,251,680 A 10/1993 Miezawa et al.
5,253,050 A 10/1993 Karasudani
5,253,109 A 10/1993 O'Farrell et al.
5,265,172 A 11/1993 Markandey et al.
5,266,873 A 11/1993 Arditi et al.
5,267,160 A 11/1993 Ito et al.
5,276,389 A 1/1994 Levers
5,285,060 A 2/1994 Larson et al.
5,289,182 A 2/1994 Brillard et al.
5,289,321 A 2/1994 Secor
5,291,424 A 3/1994 Asayama et al.
5,293,162 A 3/1994 Bachalo
5,298,732 A 3/1994 Chen
5,301,115 A 4/1994 Nouso et al.
5,302,956 A 4/1994 Asbury et al.
5,304,980 A 4/1994 Maekawa
5,305,012 A 4/1994 Faris
5,307,136 A 4/1994 Saneyoshi
5,307,419 A 4/1994 Tsujino et al.
5,309,137 A 5/1994 Kajiwara
5,313,072 A 5/1994 Vachss
5,318,143 A 6/1994 Parker et al.
5,321,556 A 6/1994 Joe
5,325,096 A 6/1994 Pakett
5,325,386 A 6/1994 Jewell et al.
5,327,288 A 7/1994 Wellington et al.
5,329,206 A 7/1994 Slotkowski et al.
5,331,312 A 7/1994 Kudoh
5,336,980 A 8/1994 Levers
5,341,437 A 8/1994 Nakayama
5,343,206 A 8/1994 Ansaldi et al.
5,345,266 A 9/1994 Denyer
5,347,456 A 9/1994 Zhang et al.
5,351,044 A 9/1994 Mathur et al.
D351,370 S 10/1994 Lawlor et al.
5,355,118 A 10/1994 Fukuhara
5,359,666 A 10/1994 Nakayama et al.
5,367,457 A 11/1994 Ishida et al.
5,369,590 A 11/1994 Karasudani
5,371,535 A 12/1994 Takizawa
5,373,911 A 12/1994 Yasui
5,374,852 A 12/1994 Parkes
5,379,196 A 1/1995 Kobayashi et al.
5,379,353 A 1/1995 Hasegawa et al.
5,386,285 A 1/1995 Asayama
5,388,048 A 2/1995 Yavnayi et al.
5,394,333 A 2/1995 Kao
5,398,041 A 3/1995 Hyatt
5,406,395 A 4/1995 Wilson et al.
5,406,414 A 4/1995 O'Farrell et al.
5,408,330 A 4/1995 Squicciarini
5,408,346 A 4/1995 Trissel et al.
5,410,346 A 4/1995 Saneyoshi et al.
5,414,257 A 5/1995 Stanton
5,414,439 A 5/1995 Groves et al.
5,414,461 A 5/1995 Kishi et al.
5,414,625 A 5/1995 Hattori
5,416,313 A 5/1995 Larson et al.
5,416,318 A 5/1995 Hegyi
5,416,478 A 5/1995 Morinaga
5,416,711 A 5/1995 Gran et al.
5,424,952 A 6/1995 Asayama
5,426,294 A 6/1995 Kobayashi et al.
5,430,431 A 7/1995 Nelson
5,430,450 A 7/1995 Holmes
5,434,407 A 7/1995 Bauer et al.
5,434,927 A 7/1995 Brady et al.
5,436,839 A 7/1995 Dausch et al.
5,440,428 A 8/1995 Hegg et al.
5,444,478 A 8/1995 Lelong et al.
5,448,180 A 9/1995 Kienzler et al.
5,450,057 A 9/1995 Watanabe
5,451,822 A 9/1995 Bechtel et al.
5,457,493 A 10/1995 Leddy et al.
5,459,660 A 10/1995 Berra
5,461,357 A 10/1995 Yoshioka et al.
5,461,361 A 10/1995 Moore
5,465,079 A 11/1995 Bouchard et al.
5,467,284 A 11/1995 Yoshioka et al.
5,469,298 A 11/1995 Suman et al.
5,471,515 A 11/1995 Fossum et al.
5,473,515 A 12/1995 Liu
5,475,366 A 12/1995 Van Lente et al.
5,475,494 A 12/1995 Nishida et al.
5,481,257 A 1/1996 Brubaker et al.
5,482,133 A 1/1996 Iwata et al.
5,483,060 A 1/1996 Sugiura et al.
5,483,168 A 1/1996 Reid
5,483,453 A 1/1996 Uemura et al.
5,487,116 A 1/1996 Nakano et al.
5,488,496 A 1/1996 Pine
5,493,269 A 2/1996 Durley et al.
5,493,392 A 2/1996 Blackmon et al.
5,498,866 A 3/1996 Bendicks et al.
5,500,766 A 3/1996 Stonecypher
5,508,592 A 4/1996 Lapatovich et al.
5,510,983 A 4/1996 Iino
5,515,448 A 5/1996 Nishitani
5,521,633 A 5/1996 Nakajima et al.
5,528,698 A 6/1996 Kamei et al.
5,529,138 A 6/1996 Shaw et al.

(56) **References Cited**

U.S. PATENT DOCUMENTS

5,530,240 A 6/1996 Larson et al.
5,530,330 A 6/1996 Baiden et al.
5,530,420 A 6/1996 Tsuchiya et al.
5,530,771 A 6/1996 Maekawa
5,535,144 A 7/1996 Kise
5,535,314 A 7/1996 Alves et al.
5,537,003 A 7/1996 Bechtel et al.
5,539,397 A 7/1996 Asanuma et al.
5,541,590 A 7/1996 Nishio
5,545,960 A 8/1996 Ishikawa
5,550,677 A 8/1996 Schofield et al.
5,555,136 A 9/1996 Waldmann et al.
5,555,312 A 9/1996 Shima et al.
5,555,503 A 9/1996 Kyrtsos et al.
5,555,555 A 9/1996 Sato et al.
5,558,123 A 9/1996 Castel et al.
5,559,695 A 9/1996 Daily
5,566,224 A 10/1996 ul Azam et al.
5,568,027 A 10/1996 Teder
5,568,316 A 10/1996 Schrenk et al.
5,572,315 A 11/1996 Krell
5,574,443 A 11/1996 Hsieh
5,576,687 A 11/1996 Blank et al.
5,581,464 A 12/1996 Woll et al.
5,582,383 A 12/1996 Mertens et al.
5,588,123 A 12/1996 Loibl
5,594,222 A 1/1997 Caldwell
5,596,319 A 1/1997 Spry et al.
5,596,382 A 1/1997 Bamford
5,598,164 A 1/1997 Reppas et al.
5,602,457 A 2/1997 Anderson et al.
5,612,686 A 3/1997 Takano et al.
5,612,883 A 3/1997 Shaffer et al.
5,614,788 A 3/1997 Mullins
5,614,885 A 3/1997 Van Lente et al.
5,615,857 A 4/1997 Hook
5,619,370 A 4/1997 Guinosso
5,627,586 A 5/1997 Yamasaki
5,633,944 A 5/1997 Guibert et al.
5,634,709 A 6/1997 Iwama
5,638,116 A 6/1997 Shimoura et al.
5,642,299 A 6/1997 Hardin et al.
5,646,612 A 7/1997 Byon
5,648,835 A 7/1997 Uzawa
5,650,944 A 7/1997 Kise
5,660,454 A 8/1997 Mori et al.
5,661,303 A 8/1997 Teder
5,666,028 A 9/1997 Bechtel et al.
5,667,896 A 9/1997 Carter et al.
5,668,663 A 9/1997 Varaprasad et al.
5,670,935 A 9/1997 Schofield et al.
5,673,019 A 9/1997 Dantoni
5,675,489 A 10/1997 Pomerleau
5,676,484 A 10/1997 Chamberlin et al.
5,677,851 A 10/1997 Kingdon et al.
5,677,979 A 10/1997 Squicciarini et al.
5,680,263 A 10/1997 Zimmermann et al.
D388,107 S 12/1997 Huckins
5,699,044 A 12/1997 Van Lente et al.
5,699,057 A 12/1997 Ikeda et al.
5,699,149 A 12/1997 Kuroda et al.
5,706,355 A 1/1998 Raboisson et al.
5,707,129 A 1/1998 Kobayashi
5,708,410 A 1/1998 Blank et al.
5,710,633 A 1/1998 Klappenbach et al.
5,715,093 A 2/1998 Schierbeek et al.
5,719,551 A 2/1998 Flick
5,724,187 A 3/1998 Varaprasad et al.
5,724,316 A 3/1998 Brunts
5,737,226 A 4/1998 Olson et al.
5,757,949 A 5/1998 Kinoshita et al.
5,760,826 A 6/1998 Nayar
5,760,828 A 6/1998 Cortes
5,760,931 A 6/1998 Saburi et al.
5,760,962 A 6/1998 Schofield et al.
5,761,094 A 6/1998 Olson et al.
5,764,139 A 6/1998 Nojima et al.
5,765,116 A 6/1998 Wilson-Jones et al.
5,765,940 A 6/1998 Levy et al.
5,781,437 A 7/1998 Wiemer et al.
5,786,772 A 7/1998 Schofield et al.
5,790,403 A 8/1998 Nakayama
5,790,973 A 8/1998 Blaker et al.
5,793,308 A 8/1998 Rosinski et al.
5,793,420 A 8/1998 Schmidt
5,796,094 A 8/1998 Schofield et al.
5,798,575 A 8/1998 O'Farrell et al.
5,804,719 A 9/1998 Didelot et al.
5,808,589 A 9/1998 Fergason
5,811,888 A 9/1998 Hsieh
5,820,097 A 10/1998 Spooner
5,835,255 A 11/1998 Miles
5,835,613 A 11/1998 Breed et al.
5,835,614 A 11/1998 Aoyama et al.
5,837,994 A 11/1998 Stam et al.
5,841,126 A 11/1998 Fossum et al.
5,844,505 A 12/1998 Van Ryzin
5,844,682 A 12/1998 Kiyomoto et al.
5,845,000 A 12/1998 Breed et al.
5,847,755 A 12/1998 Wixson et al.
5,848,802 A 12/1998 Breed et al.
5,850,176 A 12/1998 Kinoshita et al.
5,850,254 A 12/1998 Takano et al.
5,867,591 A 2/1999 Onda
5,877,707 A 3/1999 Kowalick
5,877,897 A 3/1999 Schofield et al.
5,878,370 A 3/1999 Olson
5,883,193 A 3/1999 Karim
5,883,684 A 3/1999 Millikan et al.
5,883,739 A 3/1999 Ashihara et al.
5,884,212 A 3/1999 Lion
5,890,021 A 3/1999 Onoda
5,890,083 A 3/1999 Franke et al.
5,896,085 A 4/1999 Mori et al.
5,899,956 A 5/1999 Chan
5,904,725 A 5/1999 Iisaka et al.
5,905,457 A 5/1999 Rashid
5,912,534 A 6/1999 Benedict
5,914,815 A 6/1999 Bos
5,920,367 A 7/1999 Kajimoto et al.
5,922,036 A 7/1999 Yasui
5,923,027 A 7/1999 Stam et al.
5,929,784 A 7/1999 Kawaziri et al.
5,929,786 A 7/1999 Schofield et al.
5,938,320 A 8/1999 Crandall
5,938,810 A 8/1999 De Vries, Jr. et al.
5,940,120 A 8/1999 Frankhouse et al.
5,942,853 A 8/1999 Piscart
5,949,331 A 9/1999 Schofield et al.
5,956,181 A 9/1999 Lin
5,959,367 A 9/1999 O'Farrell et al.
5,959,555 A 9/1999 Furuta
5,961,571 A 10/1999 Gorr
5,963,247 A 10/1999 Banitt
5,964,822 A 10/1999 Alland et al.
5,971,552 A 10/1999 O'Farrell et al.
5,982,288 A 11/1999 Sawatari et al.
5,986,796 A 11/1999 Miles
5,990,469 A 11/1999 Bechtel et al.
5,990,649 A 11/1999 Nagao et al.
5,991,427 A 11/1999 Kakinami et al.
6,001,486 A 12/1999 Varaprasad et al.
6,009,336 A 12/1999 Harris et al.
6,020,704 A 2/2000 Buschur
6,028,537 A 2/2000 Suman et al.
6,031,484 A 2/2000 Bullinger et al.
6,037,860 A 3/2000 Zander
6,037,975 A 3/2000 Aoyama
6,049,171 A 4/2000 Stam et al.
6,052,124 A 4/2000 Stein et al.
6,057,754 A 5/2000 Kinoshita et al.
6,066,933 A 5/2000 Ponziana
6,084,519 A 7/2000 Coulling et al.
6,087,953 A 7/2000 DeLine et al.

(56) **References Cited**

U.S. PATENT DOCUMENTS

6,091,833 A 7/2000 Yasui et al.
6,094,198 A 7/2000 Shashua
6,097,023 A 8/2000 Schofield et al.
6,097,024 A 8/2000 Stam et al.
6,100,811 A 8/2000 Hsu et al.
6,107,939 A 8/2000 Sorden
6,116,743 A 9/2000 Hoek
6,122,597 A 9/2000 Saneyoshi et al.
6,124,647 A 9/2000 Marcus et al.
6,124,886 A 9/2000 DeLine et al.
6,139,172 A 10/2000 Bos et al.
6,140,980 A 10/2000 Spitzer et al.
6,144,022 A 11/2000 Tenenbaum et al.
6,144,158 A 11/2000 Beam
6,150,014 A 11/2000 Chu et al.
6,150,930 A 11/2000 Cooper
6,151,065 A 11/2000 Steed et al.
6,158,655 A 12/2000 DeVries, Jr. et al.
6,166,628 A 12/2000 Andreas
6,170,955 B1 1/2001 Campbell et al.
6,172,613 B1 1/2001 DeLine et al.
6,175,164 B1 1/2001 O'Farrell et al.
6,175,300 B1 1/2001 Kendrick
6,176,590 B1 1/2001 Prevost et al.
6,188,939 B1 2/2001 Morgan et al.
6,198,409 B1 3/2001 Schofield et al.
6,201,642 B1 3/2001 Bos
6,211,907 B1 4/2001 Scaman et al.
6,218,934 B1 4/2001 Regan
6,219,444 B1 4/2001 Shashua et al.
6,222,447 B1 4/2001 Schofield et al.
6,222,460 B1 4/2001 DeLine et al.
6,226,061 B1 5/2001 Tagusa
6,229,319 B1 5/2001 Johnson
6,243,003 B1 6/2001 DeLine et al.
6,247,819 B1 6/2001 Turnbull et al.
6,250,148 B1 6/2001 Lynam
6,259,412 B1 7/2001 Duroux
6,259,423 B1 7/2001 Tokito et al.
6,266,082 B1 7/2001 Yonezawa et al.
6,266,442 B1 * 7/2001 Laumeyer G06K 9/00818 382/104
6,278,377 B1 8/2001 DeLine et al.
6,281,804 B1 8/2001 Haller et al.
6,285,393 B1 9/2001 Shimoura et al.
6,285,778 B1 9/2001 Nakajima et al.
6,291,905 B1 9/2001 Drummond et al.
6,291,906 B1 9/2001 Marcus et al.
6,292,752 B1 9/2001 Franke et al.
6,294,989 B1 9/2001 Schofield et al.
6,297,781 B1 10/2001 Turnbull et al.
6,302,545 B1 10/2001 Schofield et al.
6,310,611 B1 10/2001 Caldwell
6,311,119 B2 10/2001 Sawamoto et al.
6,313,454 B1 11/2001 Bos et al.
6,315,421 B1 11/2001 Apfelbeck et al.
6,317,057 B1 11/2001 Lee
6,318,870 B1 11/2001 Spooner et al.
6,320,176 B1 11/2001 Schofield et al.
6,320,282 B1 11/2001 Caldwell
6,324,450 B1 11/2001 Iwama
6,326,613 B1 12/2001 Heslin et al.
6,329,925 B1 12/2001 Skiver et al.
6,333,759 B1 12/2001 Mazzilli
6,341,523 B2 1/2002 Lynam
6,353,392 B1 3/2002 Schofield et al.
6,359,392 B1 3/2002 He
6,362,729 B1 3/2002 Hellmann et al.
6,366,213 B2 * 4/2002 DeLine B60K 35/00 340/425.5
6,366,236 B1 4/2002 Farmer et al.
6,370,329 B1 4/2002 Teuchert
6,388,565 B1 5/2002 Bernhard et al.
6,388,580 B1 5/2002 Graham
6,389,340 B1 5/2002 Rayner
6,392,218 B1 5/2002 Kuehnle
6,396,397 B1 5/2002 Bos et al.
6,396,408 B2 5/2002 Drummond et al.
6,411,204 B1 6/2002 Bloomfield et al.
6,411,328 B1 6/2002 Franke et al.
6,420,975 B1 * 7/2002 DeLine B60R 1/12 340/425.5
6,424,273 B1 7/2002 Gutta et al.
6,428,172 B1 8/2002 Hutzel et al.
6,429,594 B1 8/2002 Stam et al.
6,430,303 B1 8/2002 Naoi et al.
6,433,676 B2 8/2002 DeLine et al.
6,433,817 B1 8/2002 Guerra
6,441,748 B1 8/2002 Takagi et al.
6,442,465 B2 8/2002 Breed et al.
6,445,287 B1 9/2002 Schofield et al.
6,445,809 B1 9/2002 Sasaki et al.
6,449,540 B1 9/2002 Rayner
6,452,148 B1 9/2002 Bendicks et al.
6,466,136 B2 10/2002 DeLine et al.
6,466,684 B1 10/2002 Sasaki et al.
6,469,739 B1 10/2002 Bechtel et al.
6,472,977 B1 10/2002 Poechmueller
6,472,979 B2 10/2002 Schofield et al.
6,477,260 B1 11/2002 Shimomura
6,477,464 B2 11/2002 McCarthy et al.
6,483,438 B2 11/2002 DeLine et al.
6,485,155 B1 11/2002 Duroux et al.
6,497,503 B1 12/2002 Dassanayake et al.
6,498,620 B2 12/2002 Schofield et al.
6,509,832 B1 1/2003 Bauer et al.
6,513,252 B1 2/2003 Schierbeek et al.
6,515,378 B2 2/2003 Drummond et al.
6,516,272 B2 2/2003 Lin
6,516,664 B2 2/2003 Lynam
6,523,964 B2 2/2003 Schofield et al.
6,534,884 B2 3/2003 Marcus et al.
6,535,242 B1 3/2003 Strumolo et al.
6,539,306 B2 3/2003 Turnbull
6,540,193 B1 4/2003 DeLine
6,547,133 B1 4/2003 DeVries, Jr. et al.
6,553,130 B1 4/2003 Lemelson et al.
6,559,435 B2 5/2003 Schofield et al.
6,570,998 B1 5/2003 Ohtsuka et al.
6,574,033 B1 6/2003 Chui et al.
6,577,334 B1 6/2003 Kawai et al.
6,578,017 B1 6/2003 Ebersole et al.
6,587,573 B1 7/2003 Stam et al.
6,587,968 B1 7/2003 Leyva
6,589,625 B1 7/2003 Kothari et al.
6,593,011 B2 7/2003 Liu et al.
6,593,565 B2 7/2003 Heslin et al.
6,593,698 B2 7/2003 Stam et al.
6,593,960 B1 7/2003 Sugimoto et al.
6,594,583 B2 7/2003 Ogura et al.
6,611,202 B2 8/2003 Schofield et al.
6,611,610 B1 8/2003 Stam et al.
6,614,579 B2 9/2003 Roberts et al.
6,617,564 B2 9/2003 Ockerse et al.
6,627,918 B2 9/2003 Getz et al.
6,631,316 B2 10/2003 Stam et al.
6,631,994 B2 10/2003 Suzuki et al.
6,636,258 B2 10/2003 Strumolo
6,648,477 B2 11/2003 Hutzel et al.
6,650,233 B2 11/2003 DeLine et al.
6,650,455 B2 11/2003 Miles
6,653,614 B2 11/2003 Stam et al.
6,672,731 B2 1/2004 Schnell et al.
6,674,562 B1 1/2004 Miles
6,674,878 B2 1/2004 Retterath et al.
6,678,056 B2 1/2004 Downs
6,678,590 B1 1/2004 Burchfiel
6,678,614 B2 1/2004 McCarthy et al.
6,680,792 B2 1/2004 Miles
6,681,163 B2 1/2004 Stam et al.
6,690,268 B2 2/2004 Schofield et al.
6,700,605 B1 3/2004 Toyoda et al.
6,703,925 B2 3/2004 Steffel
6,704,621 B1 3/2004 Stein et al.

(56) **References Cited**

U.S. PATENT DOCUMENTS

6,710,908 B2 3/2004 Miles et al.
6,711,474 B1 * 3/2004 Treyz G01C 21/26 455/414.1
6,714,331 B2 3/2004 Lewis et al.
6,717,524 B2 4/2004 DeLine et al.
6,717,610 B1 4/2004 Bos et al.
6,728,393 B2 4/2004 Stam et al.
6,728,623 B2 4/2004 Takenaga et al.
6,735,506 B2 5/2004 Breed et al.
6,738,088 B1 5/2004 Uskolovsky et al.
6,741,186 B2 5/2004 Ross
6,741,377 B2 5/2004 Miles
6,744,353 B2 6/2004 Sjönell
6,754,367 B1 6/2004 Ito et al.
6,757,109 B2 6/2004 Bos
6,762,867 B2 7/2004 Lippert et al.
6,764,210 B2 7/2004 Akiyama
6,765,480 B2 7/2004 Tseng
6,774,988 B2 8/2004 Stam et al.
6,784,828 B2 8/2004 Delcheccolo et al.
6,794,119 B2 9/2004 Miles
6,795,221 B1 9/2004 Urey
6,801,127 B2 10/2004 Mizusawa
6,801,244 B2 10/2004 Takeda et al.
6,802,617 B2 10/2004 Schofield et al.
6,806,452 B2 10/2004 Bos et al.
6,807,287 B1 10/2004 Hermans
6,811,330 B1 11/2004 Tozawa
6,812,463 B2 11/2004 Okada
6,813,545 B2 11/2004 Stromme
6,819,231 B2 11/2004 Berberich et al.
6,819,779 B1 11/2004 Nichani
6,822,563 B2 11/2004 Bos et al.
6,823,241 B2 11/2004 Shirato et al.
6,823,261 B2 11/2004 Sekiguchi
6,824,281 B2 11/2004 Schofield et al.
6,831,261 B2 12/2004 Schofield et al.
6,838,980 B2 1/2005 Gloger et al.
6,842,189 B2 1/2005 Park
6,847,487 B2 1/2005 Burgner
6,850,629 B2 2/2005 Jeon
6,853,738 B1 2/2005 Nishigaki et al.
6,859,148 B2 2/2005 Miller et al.
6,861,809 B2 3/2005 Stam
6,864,930 B2 3/2005 Matsushita et al.
6,873,253 B2 3/2005 Veziris
6,882,287 B2 4/2005 Schofield
6,888,447 B2 5/2005 Hori et al.
6,889,161 B2 5/2005 Winner et al.
6,891,563 B2 5/2005 Schofield et al.
6,898,518 B2 5/2005 Padmanabhan
6,906,620 B2 6/2005 Nakai et al.
6,906,639 B2 6/2005 Lemelson et al.
6,909,753 B2 6/2005 Meehan et al.
6,914,521 B2 7/2005 Rothkop
6,928,180 B2 8/2005 Stam et al.
6,932,669 B2 8/2005 Lee et al.
6,933,837 B2 8/2005 Gunderson et al.
6,940,423 B2 9/2005 Takagi et al.
6,946,978 B2 9/2005 Schofield
6,950,035 B2 9/2005 Tanaka et al.
6,953,253 B2 10/2005 Schofield et al.
6,956,469 B2 10/2005 Hirvonen et al.
6,959,994 B2 11/2005 Fujikawa et al.
6,961,178 B2 11/2005 Sugino et al.
6,961,661 B2 11/2005 Sekiguchi
6,963,661 B1 11/2005 Hattori et al.
6,967,569 B2 11/2005 Weber et al.
6,968,736 B2 11/2005 Lynam
6,975,775 B2 12/2005 Rykowski et al.
6,980,092 B2 12/2005 Turnbull et al.
6,989,736 B2 1/2006 Berberich et al.
6,990,397 B2 1/2006 Albou et al.
6,995,687 B2 2/2006 Lang et al.
7,004,593 B2 2/2006 Weller et al.
7,004,606 B2 2/2006 Schofield
7,005,974 B2 2/2006 McMahon et al.
7,012,507 B2 3/2006 DeLine et al.
7,012,727 B2 3/2006 Hutzel et al.
7,023,331 B2 4/2006 Kodama
7,027,387 B2 4/2006 Reinold et al.
7,027,615 B2 4/2006 Chen
7,030,738 B2 4/2006 Ishii
7,030,775 B2 4/2006 Sekiguchi
7,030,778 B2 4/2006 Ra
7,038,577 B2 5/2006 Pawlicki et al.
7,046,448 B2 5/2006 Burgner
7,057,505 B2 6/2006 Iwamoto
7,057,681 B2 6/2006 Hinata et al.
7,062,300 B1 6/2006 Kim
7,065,432 B2 6/2006 Moisel et al.
7,068,289 B2 6/2006 Satoh et al.
7,068,844 B1 6/2006 Javidi et al.
7,085,633 B2 8/2006 Nishira et al.
7,085,637 B2 * 8/2006 Breed B60N 2/2863 340/440
7,091,837 B2 8/2006 Nakai et al.
7,092,548 B2 * 8/2006 Laumeyer G06K 9/00818 340/309
7,095,432 B2 8/2006 Nakayama et al.
7,106,213 B2 9/2006 White
7,110,021 B2 9/2006 Nobori et al.
7,110,156 B2 9/2006 Lawlor et al.
7,113,867 B1 9/2006 Stein
7,116,246 B2 10/2006 Winter et al.
7,121,028 B2 10/2006 Shoen et al.
7,123,168 B2 10/2006 Schofield
7,133,661 B2 11/2006 Hatae et al.
7,149,613 B2 12/2006 Stam et al.
7,151,996 B2 12/2006 Stein
7,167,796 B2 1/2007 Taylor et al.
7,171,027 B2 1/2007 Satoh
7,184,585 B2 2/2007 Hamza et al.
7,187,498 B2 3/2007 Bengoechea et al.
7,188,963 B2 3/2007 Schofield et al.
7,195,381 B2 3/2007 Lynam et al.
7,202,776 B2 * 4/2007 Breed B60N 2/2863 340/435
7,202,987 B2 4/2007 Varaprasad et al.
7,205,904 B2 4/2007 Schofield
7,221,363 B2 5/2007 Roberts et al.
7,224,324 B2 5/2007 Quist et al.
7,227,459 B2 6/2007 Bos et al.
7,227,611 B2 6/2007 Hull et al.
7,235,918 B2 6/2007 McCullough et al.
7,248,283 B2 7/2007 Takagi et al.
7,248,344 B2 7/2007 Morcom
7,249,860 B2 7/2007 Kulas et al.
7,253,723 B2 8/2007 Lindahl et al.
7,255,451 B2 8/2007 McCabe et al.
7,271,951 B2 9/2007 Weber et al.
7,304,661 B2 12/2007 Ishikura
7,311,406 B2 12/2007 Schofield et al.
7,325,934 B2 2/2008 Schofield et al.
7,325,935 B2 2/2008 Schofield et al.
7,337,055 B2 * 2/2008 Matsumoto B60K 31/0083 340/905
7,338,177 B2 3/2008 Lynam
7,339,149 B1 3/2008 Schofield et al.
7,344,261 B2 3/2008 Schofield et al.
7,355,524 B2 4/2008 Schofield
7,360,932 B2 4/2008 Uken et al.
7,362,883 B2 4/2008 Otsuka et al.
7,370,983 B2 5/2008 DeWind et al.
7,375,803 B1 5/2008 Bamji
7,380,948 B2 6/2008 Schofield et al.
7,388,182 B2 6/2008 Schofield et al.
7,402,786 B2 7/2008 Schofield et al.
7,403,659 B2 7/2008 Das et al.
7,420,756 B2 9/2008 Lynam
7,423,248 B2 9/2008 Schofield et al.
7,423,821 B2 9/2008 Bechtel et al.
7,425,076 B2 9/2008 Schofield et al.
7,429,998 B2 9/2008 Kawauchi et al.

(56) **References Cited**

U.S. PATENT DOCUMENTS

7,432,248 B2 10/2008 Roberts et al.
7,432,967 B2 10/2008 Bechtel et al.
7,446,924 B2 11/2008 Schofield et al.
7,459,664 B2 12/2008 Schofield et al.
7,460,007 B2 12/2008 Schofield et al.
7,468,652 B2 12/2008 DeLine et al.
7,474,963 B2 1/2009 Taylor et al.
7,480,149 B2 1/2009 DeWard et al.
7,489,374 B2 2/2009 Utsumi et al.
7,495,719 B2 2/2009 Adachi et al.
7,525,604 B2 4/2009 Xue
7,526,103 B2 4/2009 Schofield et al.
7,533,998 B2 5/2009 Schofield et al.
7,541,743 B2 6/2009 Salmeen et al.
7,543,946 B2 6/2009 Ockerse et al.
7,545,429 B2 6/2009 Travis
7,548,291 B2 6/2009 Lee et al.
7,551,103 B2 6/2009 Schofield
7,561,181 B2 7/2009 Schofield et al.
7,565,006 B2 7/2009 Stam et al.
7,566,639 B2 7/2009 Kohda
7,566,851 B2 7/2009 Stein et al.
7,567,291 B2 7/2009 Bechtel et al.
7,605,856 B2 10/2009 Imoto
7,613,327 B2 11/2009 Stam et al.
7,616,781 B2 11/2009 Schofield et al.
7,619,508 B2 11/2009 Lynam et al.
7,629,996 B2 12/2009 Rademacher et al.
7,633,383 B2 12/2009 Dunsmoir et al.
7,639,149 B2 12/2009 Katoh
7,650,030 B2 1/2010 Shan et al.
7,653,215 B2 1/2010 Stam
7,655,894 B2 2/2010 Schofield et al.
7,663,798 B2 2/2010 Tonar et al.
7,676,087 B2 3/2010 Dhua et al.
7,683,326 B2 3/2010 Stam et al.
7,702,133 B2 4/2010 Muramatsu et al.
7,719,408 B2 5/2010 DeWard et al.
7,720,580 B2 5/2010 Higgins-Luthman
7,724,434 B2 5/2010 Cross et al.
7,731,403 B2 6/2010 Lynam et al.
7,742,864 B2 6/2010 Sekiguchi
7,786,898 B2 8/2010 Stein et al.
7,791,694 B2 9/2010 Molsen et al.
7,792,329 B2 9/2010 Schofield et al.
7,825,600 B2 11/2010 Stam et al.
7,842,154 B2 11/2010 Lynam
7,843,451 B2 11/2010 Lafon
7,854,514 B2 12/2010 Conner et al.
7,855,755 B2 12/2010 Weller et al.
7,855,778 B2 12/2010 Yung et al.
7,859,565 B2 12/2010 Schofield et al.
7,877,175 B2 1/2011 Higgins-Luthman
7,881,496 B2 2/2011 Camilleri et al.
7,903,324 B2 3/2011 Kobayashi et al.
7,903,335 B2 3/2011 Nieuwkerk et al.
7,914,187 B2 3/2011 Higgins-Luthman et al.
7,914,188 B2 3/2011 DeLine et al.
7,930,160 B1 4/2011 Hosagrahara et al.
7,949,152 B2 5/2011 Schofield et al.
7,965,357 B2 6/2011 Van De Witte et al.
7,991,522 B2 8/2011 Higgins-Luthman
7,994,462 B2 8/2011 Schofield et al.
7,995,067 B2 8/2011 Navon
8,004,392 B2 8/2011 DeLine et al.
8,017,898 B2 9/2011 Lu et al.
8,027,691 B2 9/2011 Bernas et al.
8,045,760 B2 10/2011 Stam et al.
8,064,643 B2 11/2011 Stein et al.
8,082,101 B2 12/2011 Stein et al.
8,090,153 B2 1/2012 Schofield et al.
8,094,002 B2 1/2012 Schofield et al.
8,095,310 B2 1/2012 Taylor et al.
8,098,142 B2 1/2012 Schofield et al.
8,100,568 B2 1/2012 DeLine et al.
8,116,929 B2 2/2012 Higgins-Luthman
8,120,652 B2 2/2012 Bechtel et al.
8,164,628 B2 4/2012 Stein et al.
8,179,437 B2 5/2012 Schofield et al.
8,184,159 B2 5/2012 Luo
8,203,440 B2 6/2012 Schofield et al.
8,222,588 B2 7/2012 Schofield et al.
8,224,031 B2 7/2012 Saito
8,233,045 B2 7/2012 Luo et al.
8,254,635 B2 8/2012 Stein et al.
8,288,711 B2 10/2012 Heslin et al.
8,289,430 B2 10/2012 Bechtel et al.
8,300,058 B2 10/2012 Navon et al.
8,305,471 B2 11/2012 Bechtel et al.
8,308,325 B2 11/2012 Takayanagi et al.
8,314,689 B2 11/2012 Schofield et al.
8,324,552 B2 12/2012 Schofield et al.
8,325,028 B2 12/2012 Schofield et al.
8,325,986 B2 12/2012 Schofield et al.
8,339,526 B2 12/2012 Minikey, Jr. et al.
8,350,683 B2 1/2013 DeLine et al.
8,362,883 B2 1/2013 Hale et al.
8,378,851 B2 2/2013 Stein et al.
8,386,114 B2 2/2013 Higgins-Luthman
8,405,726 B2 3/2013 Schofield et al.
8,414,137 B2 4/2013 Quinn et al.
8,452,055 B2 5/2013 Stein et al.
8,481,910 B2 7/2013 Schofield et al.
8,481,916 B2 7/2013 Heslin et al.
8,492,698 B2 7/2013 Schofield et al.
8,508,593 B1 8/2013 Schofield et al.
8,513,590 B2 8/2013 Heslin et al.
8,531,278 B2 9/2013 Deward et al.
8,531,279 B2 9/2013 DeLine et al.
8,534,887 B2 9/2013 DeLine et al.
8,538,205 B2 9/2013 Sixsou et al.
8,543,330 B2 9/2013 Taylor et al.
8,553,088 B2 10/2013 Stein et al.
8,599,001 B2 12/2013 Schofield et al.
8,629,768 B2 1/2014 Schofield et al.
8,636,393 B2 1/2014 Schofield
8,637,801 B2 1/2014 Schofield et al.
8,643,724 B2 2/2014 Schofield et al.
8,656,221 B2 2/2014 Sixsou et al.
8,676,491 B2 3/2014 Taylor et al.
8,686,840 B2 4/2014 Drummond et al.
8,692,659 B2 4/2014 Schofield et al.
8,818,042 B2 8/2014 Schofield et al.
2001/0002451 A1 5/2001 Breed
2002/0003571 A1 1/2002 Schofield et al.
2002/0005778 A1 1/2002 Breed et al.
2002/0011611 A1 1/2002 Huang et al.
2002/0029103 A1 3/2002 Breed et al.
2002/0060522 A1 5/2002 Stam et al.
2002/0080235 A1 6/2002 Jeon
2002/0113873 A1 8/2002 Williams
2002/0116106 A1 8/2002 Breed et al.
2002/0126002 A1 9/2002 Patchell
2002/0126875 A1 9/2002 Naoi et al.
2003/0040864 A1 2/2003 Stein
2003/0070741 A1 4/2003 Rosenberg et al.
2003/0103142 A1 6/2003 Hitomi et al.
2003/0125855 A1 7/2003 Breed et al.
2003/0128106 A1 7/2003 Ross
2003/0137586 A1 7/2003 Lewellen
2003/0209893 A1 11/2003 Breed et al.
2003/0222982 A1 12/2003 Hamdan et al.
2004/0016870 A1 1/2004 Pawlicki et al.
2004/0086153 A1 5/2004 Tsai et al.
2004/0096082 A1 5/2004 Nakai et al.
2004/0146184 A1 7/2004 Hamza et al.
2004/0148063 A1 7/2004 Patchell
2004/0164228 A1 8/2004 Fogg et al.
2004/0200948 A1 10/2004 Bos et al.
2005/0073853 A1 4/2005 Stam
2005/0131607 A1 6/2005 Breed
2005/0219852 A1 10/2005 Stam et al.
2005/0226490 A1 10/2005 Phillips et al.
2005/0237385 A1 10/2005 Kosaka et al.

(56) **References Cited**

U.S. PATENT DOCUMENTS

2006/0018511	A1	1/2006	Stam et al.
2006/0018512	A1	1/2006	Stam et al.
2006/0050018	A1	3/2006	Hutzel et al.
2006/0091813	A1	5/2006	Stam et al.
2006/0095175	A1	5/2006	deWaal et al.
2006/0103727	A1	5/2006	Tseng
2006/0250224	A1	11/2006	Steffel et al.
2006/0250501	A1	11/2006	Wildmann et al.
2007/0024724	A1	2/2007	Stein et al.
2007/0104476	A1	5/2007	Yasutomi et al.
2007/0109406	A1	5/2007	Schofield et al.
2007/0115357	A1	5/2007	Stein et al.
2007/0120657	A1	5/2007	Schofield et al.
2007/0154063	A1	7/2007	Breed
2007/0154068	A1	7/2007	Stein et al.
2007/0193811	A1	8/2007	Breed et al.
2007/0221822	A1	9/2007	Stein et al.
2007/0229238	A1	10/2007	Boyles et al.
2007/0230792	A1	10/2007	Shashua et al.
2007/0242339	A1	10/2007	Bradley
2008/0036576	A1	2/2008	Stein et al.
2008/0043099	A1	2/2008	Stein et al.
2008/0137908	A1	6/2008	Stein
2008/0147321	A1	6/2008	Howard et al.
2008/0234899	A1	9/2008	Breed et al.
2008/0239393	A1	10/2008	Navon
2008/0266396	A1	10/2008	Stein
2009/0052003	A1	2/2009	Schofield et al.
2009/0066065	A1	3/2009	Breed et al.
2009/0113509	A1	4/2009	Tseng et al.
2009/0143986	A1	6/2009	Stein et al.
2009/0182690	A1	7/2009	Stein
2009/0190015	A1	7/2009	Bechtel et al.
2009/0201137	A1	8/2009	Weller et al.
2009/0243824	A1	10/2009	Peterson et al.
2009/0256938	A1	10/2009	Bechtel et al.
2009/0300629	A1	12/2009	Navon et al.
2010/0125717	A1	5/2010	Navon
2011/0018700	A1	1/2011	Stein et al.
2011/0219217	A1	9/2011	Sixsou et al.
2011/0280495	A1	11/2011	Sixsou et al.
2011/0307684	A1	12/2011	Kreinin et al.
2012/0002053	A1	1/2012	Stein et al.
2012/0045112	A1	2/2012	Lundblad et al.
2012/0056735	A1	3/2012	Stein et al.
2012/0069185	A1	3/2012	Stein
2012/0105639	A1	5/2012	Stein et al.
2012/0140076	A1	6/2012	Rosenbaum et al.
2012/0200707	A1	8/2012	Stein et al.
2012/0212593	A1	8/2012	Na'aman et al.
2012/0233841	A1	9/2012	Stein
2012/0314071	A1	12/2012	Rosenbaum et al.
2013/0135444	A1	5/2013	Stein et al.
2013/0141580	A1	6/2013	Stein et al.
2013/0147957	A1	6/2013	Stein
2013/0169536	A1	7/2013	Wexler et al.
2013/0271584	A1	10/2013	Wexler et al.
2013/0308828	A1	11/2013	Stein et al.
2014/0015976	A1	1/2014	DeLine et al.
2014/0033203	A1	1/2014	Dogon et al.
2014/0049648	A1	2/2014	Stein et al.
2014/0082307	A1	3/2014	Kreinin et al.
2014/0093132	A1	4/2014	Stein et al.
2014/0122551	A1	5/2014	Dogon et al.
2014/0156140	A1	6/2014	Stein et al.
2014/0160244	A1	6/2014	Berberian et al.
2014/0161323	A1	6/2014	Livyatan et al.
2014/0198184	A1	7/2014	Stein et al.

FOREIGN PATENT DOCUMENTS

BE	1008142	A7	1/1996
CA	1101522		5/1981
CA	2392578		11/2000
CA	2392652		11/2000
CH	6446	A5	7/1984
CN	2074262	U	4/1991
CN	2185701	Y	12/1994
CN	1104741	A	7/1995
CN	2204254	Y	8/1995
CN	1194056		6/1996
CN	1235913		5/1999
CN	102193852		3/2001
CN	1383032		4/2002
CN	102542256		12/2011
DE	1152627		8/1963
DE	1182971		12/1964
DE	1190413		4/1965
DE	1196598		7/1965
DE	1214174		4/1966
DE	2064839		7/1972
DE	3004247		8/1981
DE	3040555	A1	5/1982
DE	3101855		8/1982
DE	3240498		5/1984
DE	3248511		7/1984
DE	3433671	A1	3/1985
DE	3535588		10/1985
DE	3515116	A1	10/1986
DE	3528220	A1	2/1987
DE	3601388		7/1987
DE	3637165		5/1988
DE	3636946	A1	6/1988
DE	3642196	A1	6/1988
DE	4015959	A1	6/1988
DE	3838365		11/1988
DE	3734066	A1	4/1989
DE	3737395	A1	5/1989
DE	3937576		11/1989
DE	3833022		4/1990
DE	3839512		5/1990
DE	3839513		5/1990
DE	4015927		5/1990
DE	3840425		6/1990
DE	3844364		7/1990
DE	9010196		9/1990
DE	3932216	A1	4/1991
DE	4007646	A	9/1991
DE	4107965		9/1991
DE	4111993		10/1991
DE	4136427		11/1991
DE	4116255		12/1991
DE	4023952	A1	2/1992
DE	4304005		2/1992
DE	4130010		3/1992
DE	4032927	A1	4/1992
DE	4133882		4/1992
DE	4035956	A1	5/1992
DE	4122531		1/1993
DE	4124654		1/1993
DE	4137551		3/1993
DE	4300941		7/1993
DE	4206142	A1	9/1993
DE	4214223	A1	11/1993
DE	4344485		12/1993
DE	4231137		2/1994
DE	4328304		3/1994
DE	4328902	A1	3/1994
DE	4332612		4/1994
DE	4238599		6/1994
DE	4337756	A1	6/1994
DE	4332836		9/1994
DE	4407082		9/1994
DE	4407757		9/1994
DE	4411179		10/1994
DE	4412669		10/1994
DE	4418122		12/1994
DE	4446452		12/1994
DE	4423966		1/1995
DE	19505487		2/1995
DE	4336288		3/1995
DE	4428069		3/1995
DE	4434698		3/1995

(56) **References Cited**

FOREIGN PATENT DOCUMENTS

DE	4341409		6/1995
DE	69107283		7/1995
DE	19518978		11/1995
DE	4480341		3/1996
DE	29703084		4/1997
DE	29805142	U1	5/1998
DE	19829162	A1	6/1998
DE	19755008	A1	7/1999
DE	19530617		2/2009
EP	0048492		9/1981
EP	0049722		4/1982
EP	0072406	A2	2/1983
EP	0176615		4/1986
EP	0202460		11/1986
EP	0169734		10/1989
EP	0340735	A2	11/1989
EP	0341985		11/1989
EP	0348691		1/1990
EP	0353200		1/1990
EP	0354561		2/1990
EP	0360880	A1	4/1990
EP	0361914		4/1990
EP	0387817		9/1990
EP	473866		1/1991
EP	0527665		2/1991
EP	0426503		5/1991
EP	0433538	A2	6/1991
EP	529346		8/1991
EP	0450553		10/1991
EP	0454516		10/1991
EP	0455524		11/1991
EP	0459433		12/1991
EP	0477986		4/1992
EP	0479271		4/1992
EP	0487100		5/1992
EP	0487465	A1	5/1992
EP	0492591		7/1992
EP	0495508		7/1992
EP	0496411		7/1992
EP	0501345	A2	9/1992
EP	0505237		9/1992
EP	0513476		11/1992
EP	0514343		11/1992
EP	0532379	A1	3/1993
EP	0533508	A2	3/1993
EP	0550397	A1	7/1993
EP	0558027	A1	9/1993
EP	0564858	A2	10/1993
EP	0567059	A1	10/1993
EP	0582236		2/1994
EP	0586857	A1	3/1994
EP	0588815	A1	3/1994
EP	0590588	A1	4/1994
EP	0591743	A1	4/1994
EP	0602962		6/1994
EP	0605045		7/1994
EP	0606586		7/1994
EP	0617296		9/1994
EP	0626654		11/1994
EP	733252		11/1994
EP	0640903		3/1995
EP	0642950		3/1995
EP	0654392		5/1995
EP	0687594		5/1995
EP	0667708	A1	8/1995
EP	0677428		10/1995
EP	0686865		12/1995
EP	0697641		2/1996
EP	0756968		2/1997
EP	0788947		8/1997
EP	0487332		10/1997
EP	0874331		3/1998
EP	677428		6/1998
EP	0893308	A2	7/1998
EP	0913751	A1	10/1998
EP	0889801		1/1999
EP	0899157		3/1999
EP	0949818		10/1999
EP	1022903		7/2000
EP	1236126		11/2000
EP	1257971		11/2000
EP	1727089		11/2000
EP	1058220		12/2000
EP	1065642		1/2001
EP	1074430		2/2001
EP	1115250		7/2001
EP	0830267		12/2001
EP	1170173		1/2002
EP	0860325		11/2002
EP	1359557	A1	5/2003
EP	1741079		1/2005
EP	2068269		1/2005
EP	1754179		4/2005
EP	1748644		7/2006
EP	1790541		11/2006
EP	1806595		11/2006
EP	1837803		3/2007
EP	1978484		4/2007
EP	1887492		8/2007
EP	1930863		12/2007
EP	2383679		12/2007
EP	2383713		12/2007
EP	2101258		3/2008
EP	2150437		4/2008
EP	2674323	A1	4/2008
EP	2131278		3/2009
EP	2187316		3/2009
EP	2172873		10/2009
EP	2365441		3/2010
EP	2395472		6/2010
EP	2431917		9/2011
EP	2448251		10/2011
EP	2463843		12/2011
EP	2690548		7/2012
EP	2602741		12/2012
EP	2605185		12/2012
EP	2629242		2/2013
EP	2709020		9/2013
EP	2728462		10/2013
ES	2250218		11/2000
FR	2610401		8/1988
FR	2641237		7/1990
FR	2646383	A1	11/1990
FR	2674201	A1	9/1992
FR	2674354	A1	9/1992
FR	2687000		8/1993
FR	2706211	A1	12/1994
FR	2721872	A1	1/1996
GB	914827		1/1963
GB	1098610	A	7/1965
GB	1000265		8/1965
GB	1008411		10/1965
GB	1054064		1/1967
GB	1098608		1/1968
GB	1106339	A	3/1968
GB	1178416		1/1970
GB	1197710		7/1970
GB	2210835		6/1989
GB	2233530		9/1991
GB	2255649	A	11/1992
GB	9303807		2/1993
GB	2261339	A	5/1993
GB	2262829	A	6/1993
GB	9310728		7/1993
GB	2267341		12/1993
GB	2271139	A	4/1994
GB	2280810	A	2/1995
GB	2289332	A	11/1995
IE	970014		7/1998
JP	1980156901		5/1979
JP	S5539843		3/1980
JP	S5885110		11/1981
JP	S5871230	A	4/1983
JP	58110334		6/1983

(56) **References Cited**

FOREIGN PATENT DOCUMENTS

JP	58122421		7/1983
JP	59114139		7/1984
JP	59127200		7/1984
JP	S6047737	A	3/1985
JP	6079889		5/1985
JP	6080953		5/1985
JP	1986260217		5/1985
JP	S6078312	A	5/1985
JP	1987001652		6/1985
JP	S60206746	A	10/1985
JP	60240545		11/1985
JP	S60219133	A	11/1985
JP	S60255537	A	12/1985
JP	S6141929	A	2/1986
JP	S6185238	A	4/1986
JP	S61105245	A	5/1986
JP	S61191937	A	8/1986
JP	S61285151	A	12/1986
JP	S61285152	A	12/1986
JP	S6221010	A	1/1987
JP	S6226141	A	2/1987
JP	62080143		4/1987
JP	S6216073		4/1987
JP	6272245		5/1987
JP	S62115600		5/1987
JP	62131837		6/1987
JP	S62253543	A	11/1987
JP	S62253546	A	11/1987
JP	S62287164	A	12/1987
JP	63011446		1/1988
JP	H01242917		3/1988
JP	63258236		10/1988
JP	63258237		10/1988
JP	1442399		11/1988
JP	63192788	U	12/1988
JP	6414700		1/1989
JP	01123587		5/1989
JP	H1168538		7/1989
JP	H01233129	A	9/1989
JP	H01265400	A	10/1989
JP	H01275237	A	11/1989
JP	H0268237	A	3/1990
JP	02190978		7/1990
JP	H236417		8/1990
JP	H02212232	A	8/1990
JP	H2117935		9/1990
JP	H0314739	A	1/1991
JP	H0374231	A	3/1991
JP	03099952		4/1991
JP	03266739		11/1991
JP	H03246413	A	11/1991
JP	H05137144		11/1991
JP	03282707		12/1991
JP	03282709		12/1991
JP	03286399	A	12/1991
JP	H03273953	A	12/1991
JP	H042909	A	1/1992
JP	H0410200	A	1/1992
JP	04114587		4/1992
JP	O4127280		4/1992
JP	04137014	A	5/1992
JP	H04137112		5/1992
JP	038157		7/1992
JP	H04194827		7/1992
JP	04239400		8/1992
JP	04242391		8/1992
JP	H04238219	A	8/1992
JP	04250786		9/1992
JP	04291405		10/1992
JP	H04303047	A	10/1992
JP	H0516722	A	1/1993
JP	H0538977		2/1993
JP	H06229759		2/1993
JP	0577657		3/1993
JP	05050883		3/1993
JP	H06258		3/1993
JP	H06332370		5/1993
JP	H05155287	A	6/1993
JP	05189694		7/1993
JP	H05172638	A	7/1993
JP	05213113		8/1993
JP	H05201298	A	8/1993
JP	05244596		9/1993
JP	H05229383	A	9/1993
JP	H07078258		9/1993
JP	05298594	A	11/1993
JP	5313736	A	11/1993
JP	H05297141	A	11/1993
JP	06048247		2/1994
JP	H0640286	A	2/1994
JP	06076200		3/1994
JP	H0672234	A	3/1994
JP	06107035		4/1994
JP	06113215		4/1994
JP	06117924		4/1994
JP	06150198		5/1994
JP	H06162398		6/1994
JP	H06174845	A	6/1994
JP	H06191344	A	7/1994
JP	06215291		8/1994
JP	6227318		8/1994
JP	06230115		8/1994
JP	H06229739	A	8/1994
JP	06247246		9/1994
JP	6266825	A	9/1994
JP	06267304		9/1994
JP	06270733		9/1994
JP	06274626		9/1994
JP	06276524		9/1994
JP	H06262963	A	9/1994
JP	H06267303	A	9/1994
JP	H06275104	A	9/1994
JP	06295601		10/1994
JP	H06289138	A	10/1994
JP	H06293236	A	10/1994
JP	05093981		11/1994
JP	06310740		11/1994
JP	06321007		11/1994
JP	H06321010	A	11/1994
JP	H06324144	A	11/1994
JP	06337938		12/1994
JP	06341821		12/1994
JP	07002021		1/1995
JP	07004170		1/1995
JP	07025286		1/1995
JP	07242147		1/1995
JP	H072022	A	1/1995
JP	732936		2/1995
JP	07032935		2/1995
JP	07047878		2/1995
JP	07052706		2/1995
JP	08235484		2/1995
JP	H0737180		2/1995
JP	H0740782		2/1995
JP	H0746460		2/1995
JP	07069125		3/1995
JP	07078240		3/1995
JP	H0764632	A	3/1995
JP	H0771916	A	3/1995
JP	H07057200		3/1995
JP	07105496		4/1995
JP	H07101291	A	4/1995
JP	H07105487	A	4/1995
JP	H07108873	A	4/1995
JP	H07108874	A	4/1995
JP	3395289	B2	5/1995
JP	07125571		5/1995
JP	07137574		5/1995
JP	H07125570	A	5/1995
JP	H730149		6/1995
JP	H07141588	A	6/1995
JP	H07144577	A	6/1995
JP	07186818		7/1995
JP	07192192	A	7/1995

(56) **References Cited**

FOREIGN PATENT DOCUMENTS

JP	06000927		8/1995
JP	H07249128	A	9/1995
JP	H08320997		9/1995
JP	H07280563	A	10/1995
JP	H07315122	A	12/1995
JP	H0840138	A	2/1996
JP	H0840140	A	2/1996
JP	H0843082	A	2/1996
JP	H0850697	A	2/1996
JP	H08044999	A	2/1996
JP	8138036		5/1996
JP	08166221		6/1996
JP	H10090188		9/1996
JP	H07239714		12/1996
JP	02630604		4/1997
JP	H0991596	A	4/1997
JP	H1178693		9/1997
JP	09330415		12/1997
JP	H10090188		1/1998
JP	10038562		2/1998
JP	10063985		3/1998
JP	10134183		5/1998
JP	10171966		6/1998
JP	H10222792		8/1998
JP	10261189		9/1998
JP	2000085474		9/1998
JP	2000207575		1/1999
JP	11069211		3/1999
JP	11078737		3/1999
JP	H1178717		3/1999
JP	2000305136		4/1999
JP	H1123305		7/1999
JP	11250228		9/1999
JP	H11259634		9/1999
JP	11345392		12/1999
JP	2000113374	A	4/2000
JP	2000127849	A	5/2000
JP	2000215299	A	8/2000
JP	2000311289	A	11/2000
JP	2001001832	A	1/2001
JP	2001092970	A	4/2001
JP	2001180401	A	7/2001
JP	2001188988	A	7/2001
JP	200129797	A	10/2001
JP	2001351107	A	12/2001
JP	2002022439	A	1/2002
JP	2002046506	A	2/2002
JP	200274339		3/2002
JP	2002079895	A	3/2002
JP	2002099908	A	4/2002
JP	2002109699	A	4/2002
JP	2002175534	A	6/2002
JP	2002211428	A	7/2002
JP	2003030665	A	1/2003
JP	2003076987		3/2003
JP	2003083742		3/2003
JP	2003123058		4/2003
JP	2003150938	A	5/2003
JP	2003168197	A	6/2003
JP	2003178397		6/2003
JP	2003217099	A	7/2003
JP	2003248895	A	9/2003
JP	2003259361	A	9/2003
JP	2003281700	A	10/2003
JP	20041658		1/2004
JP	2004032460	A	1/2004
JP	2004146904		5/2004
JP	2004336613	A	11/2004
JP	2004355139		12/2004
KR	2000883510000		6/1993
KR	1020010018981		4/2001
KR	412434	B1	3/2004
SE	336535		4/1970
WO	WO8605147		9/1986
WO	WO8809023		11/1988
WO	WO9004528		5/1990
WO	WO9300647		1/1993
WO	WO9304556		3/1993
WO	WO9310550		5/1993
WO	WO9311631		6/1993
WO	WO9321596		10/1993
WO	WO9414974		7/1994
WO	WO9419212		9/1994
WO	WO9518979		7/1995
WO	WO9523082		8/1995
WO	WO9602817		2/1996
WO	WO9615921		5/1996
WO	WO9638319		5/1996
WO	WO9618275		6/1996
WO	WO9621581		7/1996
WO	WO9634365		10/1996
WO	WO9701246		1/1997
WO	WO9729926		8/1997
WO	WO9735743		10/1997
WO	WO9748134		12/1997
WO	WO9810246		3/1998
WO	WO9923828		5/1999
WO	WO9943242		9/1999
WO	WO9959100		11/1999
WO	WO0015462		3/2000
WO	WO0039120		7/2000
WO	WO0126332		4/2001
WO	WO0139018		5/2001
WO	WO0164481		9/2001
WO	WO0170538		9/2001
WO	WO0177763		10/2001
WO	WO0180068		10/2001
WO	WO0180353		10/2001
WO	WO02071487		9/2002
WO	WO03093857		11/2003
WO	WO2004004320		1/2004
WO	WO2004005073		1/2004
WO	WO2005098751		10/2005
WO	WO2005098782		10/2005
WO	WO2008134715		11/2008
WO	WO2013121357		2/2013

OTHER PUBLICATIONS

"Head-Up Display (HUD) Systems" iCar Advantage, vol. VI, No. 6 (NB pp. 6-15 not relevant), Nov. 12, 1993, pp. 1-5.
"How to drive at 70mph in the fog", Oct. 15, 1991.
"Jaguar spring into action!" Oct. 14, 1991.
"Jaguar XK8 1997 Range Electrical Guide", 1996.
"Lucas Developing Car of the Future", Dec. 1991.
"Motoring World", Oct. 11, 1991.
"Not making an impact", Nov. 1991.
"Sicuri Con Lucas"—Review of Lucas System by Bignamini & Partners, Mar. 1992.
"The Real Night Rider", Nov. 10, 1991.
"All-seeing screens for tomorrow's cars", Oct. 4, 1991.
"Basic Tech" May 1992.
"Cars that can 'see' in thick fog", Oct. 11, 1991.
"Final Report of the Working Group on Advanced Vehicle Control Systems (AVCS) Mobility 2000," Mar. 1990.
"Fired up on safety", Oct. 10, 1991.
"Ford Displays Technology", Oct. 11, 1991.
"Jaguar Adapts Pilot's Night Sights for safer driving", Sep. 28, 1991.
"Magic Eye on safety", Oct. 10, 1991.
"On-screen technology aims at safer driving", Oct. 4, 1991.
"Rare touch of glass", Oct. 13, 1991.
Safety eye on the future, Oct. 9, 1991.
"Super safe Jags", Oct. 4, 1991.
3D Reconstruction from Tangent-of-Sight Measurements of a Moving Object Seen from a Moving Camera, Segal, D. and Shashua, A., European Conference on Computer Vision (ECCV), Jun. 2000, Dublin, Ireland, pp. 220-234.
3M, "Automotive Rear View Mirror Button Repair System", Jun. 1996.
A Computer Vision System on a Chip: a case study from the automotive domain, Stein et al., IEEE Computer Society Conference on Computer Vision and Pattern Recognition, 2005.

(56) **References Cited**

OTHER PUBLICATIONS

A Geometric Invariant For Visual Recognition and 3D Reconstruction From Two Perspective/Orthographic Views, Shashua, A., Proceedings of the IEEE 2nd Qualitative Vision Workshop, Jun. 1993, New York, NY, pp. 107-117.
A Parallel Decomposition Solver for SVM: Distributed Dual Ascend using Fenchel Duality, Hazan, T., Man, A. and Shashua, A., Conf. on Computer Vision and Pattern Recognition (CVPR), Jun. 2008, Anchorage, Alaska.
A Unifying Approach to Hard and Probabilistic Clustering, Zass, R. and Shashua, A., International Conference on Computer Vision (ICCV), Beijing, China, Oct. 2005.
Accurate Internal Camera Calibration using Rotation, with Analysis of Sources of Error, G.P. Stein, Fifth International Conference on Computer Vision, 1995.
Achler et al., "Vehicle Wheel Detector using 2D Filter Banks," IEEE Intelligent Vehicles Symposium of Jun. 2004.
Affine 3-D Reconstruction from Two Projective Images of Independently Translating Planes, Wolf, L. and Shashua, A., International Conference on Computer Vision (ICCV), Jul. 2001, Vancouver, Canada, pp. 238-244.
Algebraic Functions For Recognition, Shashua, A., IEEE Transactions on Pattern Analysis and Machine Intelligence (PAMI) vol. 17(8), 1995 pp. 779-789.
Alley, Algorithms for automatic guided vehicle navigation and guidance based on Linear Image Array sensor data; Masters or PhD. Thesis, Dec. 31, 1988.
Altan, Craig, LaneTrak: a vision-based automatic vehicle steering System, 1992.
Ambiguity from Reconstruction From Images of Six Points, Maybank, S. and Shashua, A., International Conference on Computer Vision (ICCV), Jan. 1998, Bombay India, pp. 703-708.
Amidi, O., "Integrated Mobile Robot Control", M.S. Thesis, Carnegie Mellon University, May 1990.
An et al., Aspects of Neural Networks in Intelligent Collision Avoidance Systems for Prometheus, JFIT 93, pp. 129-135 (Mar. 1993).
Arain et al., Action planning for the collision avoidance system using neural networks, Intelligent Vehicle Symposium, Tokyo, Japan (Jul. 1993).
Arain et al., Application of Neural Networks for Traffic Scenario Identification, 4th Prometheus Workshop, University of Compiegne, Paris, France, pp. 102-111, Sep. 1990.
Article entitled "Generation of Vision Technology," published by VLSI Vision Limited, publication date unknown.
Ashly Steven, "Smart Cars and Automated Highways", 1998.
Aufrere, R., et al. "A model-driven approach for real-time road recognition" Machine Vision and Applications 13, 2001 pp. 95-107.
Auty et al., "Image acquisition system for traffic monitoring applications" Mar. 14, 1995.
Ballard, Dana H. et al., "Computer Vision", 1982, p. 88-89, sect. 3.4.1.
Barron et al., "The role of electronic controls for future automotive mechatronic systems", Mar. 1996.
Batavia, et al., "Overtaking vehicle detection using implicit optical flow", Proceedings of the IEEE Transportation Systems Conference, Nov. 1997, pp. 729-734.
Batavia, H., Driver-Adaptive Lane Departure Warning Systems, The Robotics Institute Carnegie Mellon University Pittsburgh, Pennsylvania, 15213, Sep. 20, 1999.
Bederson, Benjamin B., A miniature Space-Variant Active Vision System: Cortex-I; Masters or Ph.D. Thesis, Jun. 10, 1992.
Begault, D.R., "Head-Up Auditory Displays for Traffic Collision Avoidance System Advisories: A Preliminary Investigation," Human Factors, 35(4), Dec. 1993, pp. 707-717.
Behringer et al., "Simultaneous Estimation of Pitch Angle and Lane Width from the Video Image of a Marked Road," pp. 966-973, Sep. 12-16, 1994.
Behringer, "Road recognition from multifocal vision", 1994, pp. 302-307.
Belt, R., et al. "See-Through Turret Visualization Program" ADA398893 Helmet- mounted display. Panoramic sensor.
Bensrhair, A., et al. "A cooperative approach to vision-based vehicle detection" Intelligent Transportation Systems, 1999. Proc., Oct. 5-8, 1999, pp. 207-212.
Bertozzi, et al., "GOLD: a parallel real-time stereo vision system for generic obstacle and lane detection", 1998.
Bertozzi, M., et al. "Obstacle and lane detection on ARGO" IEEE Transactions on Image Processing, 7(1):62-81, Jan. 1998, pp. 62-81.
Bertozzi, M., et al. "Performance analysis of a low-cost solution to vision-based obstacle detection" Intelligent Transportation Systems, 1999. Proc., Oct. 5-8, 1999, pp. 350-355.
Bertozzi, M., et al."Vision-based intelligent vehicles: State of the art and perspectives" Robotics and Autonomous Systems, 32, 2000 pp. 1-16.
Beucher et al.; "Road Segmentation and Obstacle Detection by a Fast Watershed Transformation".
Borenstein et al., "Where am I? Sensors and Method for Mobile Robot Positioning", University of Michigan, Apr. 1996, pp. 2, 125-128.
Bow, Sing T., "Pattern Recognition and Image Preprocessing (Signal Processing and Communications)", CRC Press, Jan. 15, 2002, pp. 557-559.
Brackstone, M., et al. "Dynamic Behavioral Data Collection Using an Instrumented Vehicle" Transportation Research Record: Journal of the Transportation Research Board, vol. 1689, Paper 99/2535.
Brauckmann et al.; "Towards All Around Automatic Visual Obstacle Sensing for Cars".
Britell, C., et al. "Collision avoidance through improved communication between tractor and trailer" Paper No. 98-S4-0-01.
Broggi et al., "Automatic Vehicle Guidance: The Experience of the ARGO Vehicle", World Scientific Publishing Co., 1999.
Broggi et al., "Multi-Resolution Vehicle Detection using Artificial Vision," IEEE Intelligent Vehicles Symposium of Jun. 2004.
Broggi, "Vision-based Road Detection in Automotive Systems: A real-time expectation-driven approach", 1995.
Broggi, A., et al. "ARGO and the MilleMiglia in Automatico Tour" IEEE Intelligent Systems, Jan.-Feb. 1999 pp. 55-64.
Broggi, et al., "Architectural Issues on Vision-based automatic vehicle guidance: The experience of the ARGO Project", 2000.
Broggi, Robust Real-time Lane and Road Detection in Critical Shadow Conditions, International Symposium on Computer Vision, 21-23.
Brown, A Survey of Image Registration Techniques, vol. 24, ACM Computing Surveys, pp. 325-376, 1992.
Brown, Scene Segmentation and Definition for Autonomous Robotic Navigation Using Structured Light Processing; Doctoral Dissertation, University of Delaware, Army Science Conference Proceedings, Jun. 22-25, 1992, vol. 1, Dec. 31, 1988, pp. 189-203.
Bucher, et al., "Image processing and behavior planning for intelligent vehicles", 2003.
Burger et al., "Estimating 3-D Egomotion from Perspective Image Sequences", IEEE Transactions on Pattern Analysis and Machine Intelligence, vol. 12, No. 11, pp. 1040-1058, Nov. 1990.
Burkard Wordenweber, "Driver assistance through lighting", 2001.
Burt et al., A Multiresolution Spline with Application to Image Mosaics, ACM Transactions on Graphics, vol. 2. No. 4, pp. 217-236, Oct. 1983.
C. Sawyer, "Collision Avoidance", Jan. 1993.
CAN Specification, Version 2.0, Bosch, 1991.
Cardiles, N. "Implementation de la commande d'un vehicule electrique autonome grace a un capteur de distance et d'angle base sur une camera lineaire" IUP de Mathematiques Appliquees et Industrielles, May 8, 1998.
Carnegie Mellon NAVLAB (including public use, demonstrations, and publications related to NAVLAB vehicles NAVLAB 1 -NAVLAB 11).
Cassiano et al.; "Review of filtering methods in mobile vision from ground vehicles in low light conditions", Feb. 14, 1992.
Challenges and solutions for Bundling Multiple DAS Applications on a Single Hardware Platform for V.I.S.I. O.N, 2011.
Charkari et al., "A new approach for real time moving vehicle detection", IEEE Paper 1993.

(56) **References Cited**

OTHER PUBLICATIONS

Charles Thorpe; "Perception for Outdoor Navigation First Year Report", Dec. 31, 1990.
Chien, et. Al. "Efficient moving object segmentation algorithm using background registration technique", IEEE Transactions on Circuits and Systems for Video Technology, vol. 12.
Chrysler Automatic Beam control, including public use and sales of vehicles including such systems, and associated advertisements and service manuals., 1960-1970.
Clune, Implementation and performance of a complex vision system on a systolic array machine; Future Generation Computer Systems, Jun. 15, 1987.
CMOS sensor page of University of Edinburgh.
Coifman, et al., A real-time computer vision system for vehicle tracking and traffic surveillance, 1998.
Convergent Message-Passing Algorithms for reference over General Graphs with Convex Free Energies, Hazan, T. and Shashua, A., Conf. on Uncertainty in AI (UAI), Helsinki, Jul. 2008.
Crisman et al., "UNSCARF, A Color Vision System for the Detection of Unstructured Roads" IEEE Paper 1991.
Crisman, J., et al.; Carnegie Mellon University; "Vision and Navigation—The Carnegie Mellon NAVLAB" edited by Charles E. Thorpe, 1990.
Crisman, J.D., Color vision system that tracks roads and intersections, Jan. 1, 1993.
Crisman, Jill D. and Charles E. Thorpe, Color Vision for Road Following, Robotics Institute, Carnegie Mellon University, Proceedings of SPIE Conference on Mobile Robots Nov. 11, 1988, Oct. 12, 1988, pp. 1-10.
Crossland, "Beyond Enforcement: In-Car Video Keeps Officers On The Streets", 1998.
Cucchiara et al., Vehicle Detection under Day and Night Illumination, 1999.
Cucchiara, et al., "Detecting moving objects, ghosts, and shadows in video streams", IEEE Transactions on Pattern Analysis and Machine Intelligence, vol. 25, No. 10.
Cucchiara, et al., "Improving Shadow Suppression in Moving Object Detection with HSV Color Information", Proceeding of IEEE International Conference on Intelligent Transportation Systems.
Curry et al., "The Lancashire telemedicine ambulance" Dec. 1, 1998.
Dally et al., "Digital Systems Engineering", The University of Cambridge, United Kingdom, 1998.
Davis, L. S., Kushner, T. R., Le Moigne, J. J. and Waxman, A. M., "Road Boundary Detection for Autonomous Vehicle Navigation," Optical Engineering, vol. 25, No. 3, Mar. 1986, pp. 409-414.
Davis, Vision-Based Navigation for Autonomous Ground Vehicles; Defense Advanced Research Projects Agency, Jul. 18, 1988.
De la Escalera et al, 1994 "Neural traffic sign recognition for autonomous vehicles".
De la Escalera et al., "Traffic sign recognition and analysis for intelligent vehicles", 2003.
Decision—Motions—Bd. R. 125(a), issued Aug. 29, 2006 in connection with Interference No. 105,325, which involved U.S. Appl. No. 09/441,341, filed Nov. 16, 1999 by Schofield et al. and U.S. Pat. No. 5,837,994, issued to Stam et al.
DeFauw, A System for Small Target Detection, Tracking, and Classification, Intelligent Transportation System.
Denyer et al., On-Chip CMOS Sensors for VLSI Imaging Systems, pp. 4b1.1-4b1.5.
Dérutin et al.; "Real-time collision avoidance at road-crossings on board the Prometheus-ProLab 2 vehicle".
Devlin, "The Eyellipse and Considerations in the Driver's Forward Field of View," Society of Automotive Engineers, Inc., Detroit, MI, Jan. 8-12, 1968.
Dickmanns et al., "A Curvature-based Scheme for Improving Road Vehicle Guidance by Computer Vision," University of Bundeswehr München, 1986.
Dickmanns et al., "Recursive 3-D road and relative ego-state recognition," IEEE Transactions on Pattern Analysis and Machine Intelligence, vol. 14, No. 2, Feb. 1992.
Dickmanns et al.; "An integrated spatio-temporal approach to automatic visual guidance of autonomous vehicles," IEEE Transactions on Systems, Man, and Cybernetics, vol. 20, No. 6, Nov./Dec. 1990.
Dickmanns, "Vehicles Capable of Dynamic Vision", Aug. 23, 1997.
Dickmanns, "4-D dynamic vision for intelligent motion control", Universitat der Bundeswehr Munich, 1991.
Dickmanns, E. et al.; "The seeing passenger car 'VaMoRs-P'", Oct. 24, 1994.
Dingus, T., et al. "TRA VTEK Evaluation Task C3 -Camera Car Study" Final Report/ Sep. 1992 to May 1994. Jun. 1995.
Direct estimation o. f motion and extended scene structure from a moving stereo rig, Stein et al., IEEE Computer Society Conference on Computer Vision and Pattern Recognition, 1998.
Direct Estimation of Motion and Extended Scene Structure from a Moving Stereo Rig, Stein, G. and Shashua, A., IEEE Conference on Computer Vision and Pattern Recognition (CVPR), Jun. 1998, pp. 211-218.
Direct Methods for Estimation of Structure and Motion from three views, Stein et al., A.I. Memo No. 1594, Nov. 1996.
Donnelly Panoramic Vision™ on Renault Talisman Concept Car At Frankfort Motor Show, PR Newswire, Frankfort, Germany Sep. 10, 2001.
Doubly Stochastic Normalization for Spectral Clustering, Zass, R. and Shashua, A., Advances in Neural Information Processing Systems (NIPS), Vancouver, Canada, Dec. 2006.
Dr. Manzoor Arain, et al., "Application of Neural Networks for Traffic Scenario Identification", Sep. 1990.
Draves, "A Video Graphics Controller for Reconfigurable Automotive Displays", Feb. 24, 1997.
Duality of multi-point and multi-frame geometry: Fundamental shape matrices and tensors, Weinshall, D. and Werman, M. and Shashua, A., European Conference on Computer Vision (ECCV), Apr. 1996, Cambridge United Kingdom, pp. 217-227.
Dubrovin, A., J. Leleve et al., "Application ofreal-time lighting simulation for intelligent front-lighting studies", 2000 pp. 333-343.
Dubuisson-Jolly, "Vehicle segmentation and classification using deformable templates", Mar. 1996.
Durant, "SMS-7 Automotive Rear View Monitoring System (#056439)", May 12, 1995.
Dynamic Pn to Pn Alignmen, Shashua, A., In Handbook of Computational Geometry for Pattern Recognition, Computer Vision. Neuro computing and Robotics. Eduardo Bayro-Corrochano (eds.), Springer-Verlag, 2004.
Easton, K. "A view to avoiding a kill", 1991.
Eaton, *An RS-170 Camera for the Military Environment*; Proc. SPIE 0979, Airborne Reconnaissance XII, Feb. 23, 1989.
Edwin Carledge, "Jaguar gives cat more lives", Oct. 10, 1991.
Elimination: An Approach to the Study of3D-from-2D, Werman, M. and Shashua, A., International Conference on Computer Vision (ICCV), Jun. 1995, Boston, MA, pp. 473479.
Ernst, S., et al. "Camera calibration for lane and obstacle detection" Intelligent Transportation Systems, 1999. Proc., Oct. 5-8, 1999 pp. 356-361.
EUREKA Prometheus Project, 1987-1995, and any corresponding publications and public demonstrations.
Fancher, P., et al. "Fostering Development, Evaluation, and Deployment of Forward Crash Avoidance Systems (FOCAS)" Annual Research Repo11 DOT HS 808 43 7, May 1995.
Fancher, P., et al. "Intelligent Cruise Control Field Operational Test (Final Report)" Final Report, vol. I: Technical Report, May 1998.
Feature Selection for Unsupervised and Supervised Inference: the Emergence of Sparsity in a Weight-based Approach, Wolf, L. and Shashua, A., Journal of Machine Learning Research (JMLR), 6(11):1885-1887, 2005, pp. 1885-1887.
Ferryman, et al., "Visual Surveillance for Moving Vehicles", 2000.
Fletcher, "CMOS light-sensor process makes possible low-cost smart machine-vision systems".
Forsyth, A System for Finding Changes in Colour, Oxford University, Jul. 23, 1987.
Forward collision warning with a single camera, Dagan et al., IEEE Intelligent Vehicles Symposium, 2004.
Fossum, "Low power camera-on-a-chip using CMOS active pixel sensor technology", Oct. 11, 1995.

(56) **References Cited**

OTHER PUBLICATIONS

Franke et al., "Autonomous driving approaches downtown", Intelligent Systems and Their Applications, IEEE 13 (6), 40-48, Nov./Dec. 1999.
Franke U., et al. "Real-Time Vision for Intelligent Vehicles" IEEE Instrumentation & Measurement Magazine, Jun. 2001, pp. 22-27.
French, R., et al. "A comparison of IVHS progress in the United States, Europe, and Japan", Dec. 31, 1993.
Fung. et al. "Effective moving cast shadow detection for monocular color traffic image sequences", Optical Engineering, vol. 41, No. 6.
Gat, et al., "Aftermarket SAE World Congress & Exhibition", Jan. 1, 2005.
Gavrila, et al., "Real-time object detection for "smart" vehicles", 1999.
Geary, J. "Passive Optical Lane Position Monitor" IDEA Project Final Report Contract ITS-24, Jan. 15, 1996.
Gehrig, S.; "Design, simulation, and implementation of a vision-based vehicle- following system" Doctoral Dissertation., Jul. 31, 2000.
GEM Muon Review Meeting—SSCL Abstract; GEM TN-03-433, Jun. 30, 1993.
General Motors Autotronic Eye, including public use and sales of vehicles including such systems, and associated advertisements and service manuals, 1953-1988.
Geometric and photometric constraints: motion and structure from three views, Stein, Doctoral Dissertation, 1998.
Goldbeck, J., et al. "Lane detection and tracking by video sensors" Intelligent Transportation Systems, 1999. Proc., Oct. 5-8, 1999.
Graef, Volker, Dynamic Vision for Precise Depth Measurement and Robot Control, Nov. 7, 1993.
Graefe, Volker, Vision for Intelligent Road Vehicles, Universität de Bundeswehr Müchen, 1993, pp. 135-140.
Greene et al., Creating Raster Omnimax Images from Multiple Perspective Views Using the Elliptical Weighted Average Filter, IEEE Computer Graphics and Applications, vol. 6, No. 6, pp. 21-27, Jun. 1986.
Grouping Contours by Iterated Pairing Network, Shashua, A. and Ullman, S., In Lippmann, R.P., Moody, J.E. and Touretzky, D.S. (eds.) Advances in Neural Information Processing Systems 3, (Proc. OfNIPS'90), Morgan Kaufmann Publishers, CA, 1991, pp. 335-341.
Gruss, Integrated sensor and range-finding analog signal processor; IEEE Journal of Solid-State Circuits, Mar. 29, 1991.
Hamit, Francis "360-Degree Interactivity: New Video and Still Cameras Provide a Global Roaming Viewpoint", Advanced Imaging, Mar. 1997, p. 50.
Haritaoglu, et al., "W4: Real-Time Surveillance of People and Their Activities", IEEE Transactions Patter Analysis and Machine Intelligence, vol. 22, No. 8.
Hebert, Martial and Eric Krotkov, Local Perception for Mobile Robot Navigation in Natural Terrain: Two Approaches, The Robotics Institute, Carnegie Mellon University, Abstract; Workshop on Computer Vision for Space Applications, Antibes, Sep. 22, 24, 1993, pp. 24-31.
Hebert, Martial, 3-D Vision Techniques for Autonomous Vehicles; Defense Advanced Research Projects Agency, Feb. 1, 1988.
Hebert, Martial, Intelligent unmanned ground vehicles: autonomous navigation research at Carnegie Mellon (Kluwer Academic Publishers), Boston, 1997.
Herbert, et al., "3-D Vision Techniques for Autonomous Vehicles", 1988.
Hess, R.A. and Modjtahedzadeh, A., "A Control Theoretic Model of Driver Steering Behavior," IEEE Control Systems Magazine, vol. 10, No. 5, Aug. 1990, pp. 3-8.
Hessburg, T., Peng, H., Masayoshi, T., Zhang, W. B., "An Experimental Study on Lateral Control of a Vehicle," California Partners for Advanced Transit and Highways (PATH), Jan. 1, 1991.
Hillebrand, M., et al. "High speed camera system using a CMOS image sensor" IEEE Intelligent Vehicles Symposium., Oct. 3-5, 1999, pp. 656-661.
Ho, Automatic spacecraft docking using computer vision-based guidance and control techniques; Journal of Guidance, Control, and Dynamics, Mar. 3, 1993.
Hock, Intelligent Navigation for Autonomous Robots Using Dynamic Vision, XVIIth ISPRS Congress, Aug. 14, 1992.
Nomography Tensors: On Algebraic Entities That Represent Three Views of Static or Moving Planar Points, Shashua, A. and Wolf, L., European Conference on Computer Vision (ECCV), Jun. 2000, Dublin, Ireland, pp. 163-177.
Honda Worldwide, "Honda Announces a Full Model Change for the Inspire." Jun. 18, 2003.
Horprasert, et al. "A Statistical Approach for Real-Time Robust Background Subtraction and Shadow Detection", Proceeding of IEEE International Conference on Computer vision Frame- Rate Workshop.
Howard, K. "Out of the Dark Ages", Oct. 30, 1991.
Hsieh, et al. "A shadow elimination method for vehicle analysis", Proceeding of IEEE International Conference on Pattern Recognition, vol. 4.
Hsieh, et al. "Shadow elimination for effective moving object detection by Gaussian shadow modeling", Image and Vision Computing, vol. 21.
https ://www.youtube.com/watch ?v= laoig VMd6tc&list= PL80069F 102808FBA3 &index=9.
https ://www.youtube.com/watch ?v=5-acCtyKf7E&list= PL80069FI02808FBA3&index=2https://www.youtube.com/ watch?v=OGXugw3cgwU&list=PL80069F 102808FBA3 &index=3.
https ://www.youtube.com/watch ?v=rV OH7u6tmlk&list= PL80069FI 02808FBA3 &index=5.
https://www .youtube.com/watch?v= XI 17 5uol2ug&list= PL80069F 102808FBA3&index=13.
https://www.youtube.com/watch ?v=6sDmAsK3aE&list= PL80069FI 02808FBA3&index=6.
https://www.youtube.com/watch ?v=nzxfMz V mnhM&list= PL80069F 102808FBA3. &index=8.
https://www.youtube.com/watch?v=507-gmGsg 1o&list=PL80069F102808FBA3. &index=7.
https://www.youtube.com/watch?v=bdQ5rsVgPuk&list= PL80069F102808FBA3&ind ex=I 1.
https://www.youtube.com/watch?v=Tat70Dg12K w8&list=PL80069FI 02808FBA3&index=4.
https://www.youtube.com/watch?v=xkJVVI 418E&list=PL8006 9F 102808FBA3&index=1.
https://www.youtube.com/watch?v=yPHkQfyO 15 g&list=PL80069FI 02808FBA3&index=I0.
https://www.youtube.com/watch?v=z7eCSimWPTM&list= PL80069FI 02808FBA3&index=14.
Hu, et al., "Action-based Road Horizontal Shape Recognition", May 1990.
Huertgen, B., et al. "Vehicle Environment Sensing by Video Sensors" No. 1999-01-0932. SAE Technical Paper, 1999.
Huijsing, "Integrated smart sensors" Sensors and Actuators A, vol. 30, Issues 1-2, pp. 167-174 (Jan. 1992).
Hutber, D., et al. "Multi-sensor multi-target tracking strategies for events that become invisible" BMVC '95 Proc. of the 6th British conference on Machine vision, V2, 1995, pp. 463-472.
Ichiro Masaki, Vision-based vehicle guidance, Springer-Verlag, New York, 1992.
IEEE 100—The Authoritative Dictionary of IEEE Standards Terms, 7th Ed. (2000).
Illumination and View Position in 3D Visual Recognition, Shashua, A., In J.E. Moody, S.J. Hanson and R.P. Lippmann (eds.) Advances in Neural Information Processing Systems, Morgan Kauffman Publishers, CA 1992 (Proc. Of NIPS '91), pp. 404-411.
Image-Based View Synthesis by Combining Trilinear Tensors and Learning Techniques, Avidan, S., Evgeniou, T., Shashua, A. and Poggio, T., ACM Conference on Virtual Reality and Systems (VRST), Sep. 1997, pp. 140-145.
Improved Obstacle Detection by Sensor Fusion, p. 1.
In So Kweon, Behavior-Based Intelligent Robot in Dynamic Indoor Environments, Jul. 7, 1992.

(56) **References Cited**

OTHER PUBLICATIONS

Industrial Electronics, Control, Instrumentation, and Automation, 1992. Power Electronics and Motion Control, Proceedings of the 1992 International Conference on Date of Conference: Nov. 9-13, 1992.
Internal Camera Calibration using Rotation and Geometric Shapes, Stein, G.P., Masters Thesis, M.I.T. (Feb. 1993).
Ishida, S., Tanaka, J., Kondo, S., and Shingyoji, M., "Development of a Driver Assistance System", 2002.
Ishikawa et al., "Visual Navigation of an Autonomous Vehicle Using White Line Recognition", Sep. 1988.
Itoh, M., et al. "Towards intelligent navigator that can provide timely advice on safe and efficient driving" Intelligent Transportation Systems, 1999. Proc., Oct. 5-8, 1999, pp. 981-986.
J. Griffiths, "Futuristic cars streets ahead of dozing drivers" Sep. 29, 1991.
Jaguar Press Releases Autumn 1991 "Jaguar Displays 21st Century Car Technologies".
Janssen; Hybrid Approach For Traffic Sign Recognition, PROgraMme for a European Traffic with Highest Efficiency and Unprecendented Safety, Nov. 28, 1993.
Japanese Article "Television Image Engineering Handbook, The Institute of Television Engineers of Japan", Jan. 17, 1981.
Jochem et al.; "PANS: a portable navigation platform", Sep. 26, 1995.
Jochem, Todd et al., Life in the Fast Lane, AI Magazine, vol. 17, No. 2, pp. 11-50, Summer 1996.
Johannes, Laura "A New Microchip Ushers In Cheaper Digital Cameras", The Wall Street Journal, Aug. 21, 1998, p. B1.
Johnson, "Georgia State Patrol's In-Car Video System", 1992.
Join Tensors: on 3D-to-3D Alignment of Dynamic Sets, Wolf, L., Shashua, A. and Wexler, Y., International Conference on Pattern Recognition (ICPR), Sep. 2000, Barcelona, Spain, pp. 99-102.
Juberts, M., Murphy, K., Nashman, M., Scheiderman, H., Scott, H., and Szabo, S., "Development and Test Results for a Vision-Based Approach to AVCS." in Proceedings of the 26th International Symposium on Automotive Technology and Automation, Aachen, Germany, Sep. 1993, pp. 1-9.
Kakinami et al., "Autonomous Vehicle Control System Using an Image Processing Sensor", Feb. 1, 1995.
Kan et al., "Model-based vehicle tracking from image sequences with an application to road surveillance," Purdue University, XP000630885, vol. 35, No. 6, Jun. 1996.
Kang et al., High Dynamic Range Video, ACM Transactions on Graphics, vol. 22.
Kassel, Simon, Lunokhod-1 Soviet Lunar Surface Vehicle; Advanced Research Projects Agency, Dec. 9, 1971.
Kastrinaki et al., "A survey of video processing techniques for traffic applications".
Kehtarnavaz et al., "Traffic sign recognition in noisy outdoor scenes", 1995.
Kehtarnavaz, Visual control of an autonomous vehicle (BART)—the vehicle-following problem, IEEE Transactions on Vehicular Technology, Aug. 31, 1991.
Kenu, Bajpayee, LaneLok: Robust Line and Curve Fitting of Lane Boundaries, 1992.
Kenue, S.K, "Lanelok: Detection of Lane Boundaries and Vehicle Tracking Using Image-Processing Techniques," SPIE Conference on Mobile Robots IV, 1989.
Kernel Feature Selection with Side Data using a Spectral Approach, Shashua, A. and Wolf, L., Proc. of the European Conference on Computer Vision (ECCV), May 2004, Prague, Czech Republic.
Kernel Principal Angles for Classification Machines with Applications to Image Sequence Interpretation, Wolf, L. and Shashua, A., IEEE Conference on Computer Vision and Pattern Recognition (CVPR), Jun. 2003, Madison.
Kidd et al., Speed Over Ground Measurement, SAE Technical Paper Series, No. 910272, pp. 29-36 (Feb.-Mar. 1991).
Kiencke, U. et al., "Automotive Serial controller Area Network," SAE Technical Paper 860391, 1986, retrieved from http://papers.sae.org/860391/, accessed Mar. 20, 2015.
King, "Taxi tests a hidden, miniature camera", Jul. 1, 1997.
Klassen et al., "Sensor Development for Agricultural Vehicle Guidance", Sep. 1, 1993.
Kluge et al., "Representation and Recovery of Road Geometry in YARF," Carnegie Mellon University, pp. 114-119.
Knipling, R., "IVHS Technologies Applied to Collision Avoidance: Perspectives on Six Target Crash Types and Countermeasures," Technical Paper presented at Safety & Human Factors session of 1993 IVHS America Annual Meeting, Apr. 14-17, 1993, pp. 1-22.
Knipling, R.R., Wierwille, W.W, "Vehicle-Based Drowsy Driver Detection: Current Status and Future Prospects," IVHS America Fourth Annual Meeting, Atlanta, GA, Apr. 17-20, 1994, pp. 1-24.
Koller et al., "Binocular Stereopsis and Lane Marker Flow for Vehicle Navigation: Lateral and Longitudinal Control," University of California, Mar. 24, 1994.
Kowalick, T. "Proactive use of highway recorded data via an event data recorder (EDR) to achieve nationwide seat belt usage in the 90th percentile by 2002" "Seat belt event data recorder (SB-EDR)"Transportation Recording: 2000 and Beyond., May 3-5, 1999, pp. 173-198, 369.
Krotkov, An agile stereo camera system for flexible image acquisition; IEEE Journal on Robotics and Automation, Feb. 18, 1988.
Kuan Darwin, Gary Phillips and A.-Chuan Hsueh, Autonomous Robotic Vehicle Road Following, IEEE Transactions on Pattern Analysis and Machine Intelligence, vol. 10, No. 5, Sep. 1988, pp. 648-658.
Kuehnle, Symmetry-based recognition of vehicle rears, 1991.
Kuhnert, "A vision system for real time road and object recognition for vehicle guidance," in Proc. SPIE Mobile Robot Conf, Cambridge, MA, Oct. 1986, pp. 267-272.
Lasky, et al., "Automated Highway Systems (AHS) Classification by Vehicle and Infrastructure", 1994.
Latent Model Clustering and Applications to Visual Recognition, Polak, S. and Shashua, A., International Conference on Computer Vision (ICCV), Rio, Brazil, Oct. 2007.
Learning over Sets using Kernel Principal Angles, Wolf, L. and Shashua, A., Journal of Machine Learning Research, 2003, pp. 913-931.
LeBlanc, et al., "CAPC: A Road-Departure Prevention System", 1996, pp. 61-71.
Lee et al.; "Automatic recognition of a car license plate using color image processing", Nov. 16, 1994.
Lee, "How to Select a Heat Sink".
Leen et al., "Digital networks in the automotive vehicle", Dec. 1999.
Lens Distortion Calibration Using Point Correspondences, Gideon P. Stein, A.I. Memo No. 1595, M.I.T. Artificial Intelligence Laboratory, Nov. 1996.
Lezin, "Video Gear In Police Cruisers Gets Mixed Reviews Critics Say It Violates Privacy Rights And Inhibits Officers From Doing Their Jobs Well", Mar. 17, 1997.
Linear Image Coding for Regression and Classification using the Tensor-rank Principle, Shashua, A. and Levin, A., IEEE Conference on Computer Vision and Pattern Recognition (CVPR), Dec. 2001, Hawaii, pp. 42-49.
Linkwitz, K., High Precision Navigation: Integration of Navigational and Geodetic Methods, Springer-Verlag, Jul. 5, 1989.
Lisowski et al., "Specification of a small electric vehicle: modular and distributed approach," IEEE 1997, pp. 919-924.
Litkouhi, B.B., Lee, A.Y. and Craig, D.B., "Estimator and Controller Design for LaneTrak, a Vision-Based Automatic Vehicle Steering System," Proceedings of the 32nd Conference on Decision and Control, San Antonio, Texas, Dec. 1993, pp. 1868-1873.
Liu Xianghong, "Development of a vision-based object detection and recognition system for intelligent vehicle", 2000.
Lockwood, Stephen, Design of an obstacle avoidance system for automated guided vehicles, Doctoral thesis, University of Huddersfield, Oct. 1991.
Lowenau, J.P., Bernasch, J. H., Rieker, H. G., Venhovens, P. T., Huber, J.P., Huhn, W., & Reich, F. M., "Adaptive light control a new light concept controlled by vehicle dynamics and navigation.", 1999.

(56) **References Cited**

OTHER PUBLICATIONS

Lu, M., et al. On-chip Automatic Exposure Control Technique, Solid-State Circuits Conference, 1991. ESSCIRC '91. Proceedings—Seventeenth European (vol. 1) with abstract.
Lucas Demonstrates Intelligent Cruise Control, Detroit Feb. 27, 1995 available at http://www.thefreelibrary.com/LUCAS+DEMONSTRATES+INTELLIGENT+CUISE+CONTROL=a016602459.
Lucas Press Releases Autumn 1991 "Autocruise Concept Automatic Distance Keeping".
Luebbers et al., "Video-image-based neural network guidance system with adaptive view-angles for autonomous vehicles", Aug. 1, 1991.
Lumia, J.; "Mobile system for measuring retroreflectance of traffic signs", Mar. 1, 1991.
Lutz et al.; "New Results on Traffic Sign Recognition".
M. P. Yazigi, Technology "Promethean Plans for Next Generation of Cars", Sep. 13, 1992.
Mackey, J., et al. "Digital Eye-Witness Systems" Transportation Recording: 2000 and Beyond, May 3-5, 1999, 271-284.
Malik et al., "A Machine Vision Based System for Guiding Lane-change Maneuvers," Sep. 1995.
Manffold Pursuit: A New Approach to Appearance Based Recognition, Shashua, A., Levin, A. and Avidan, S., International Conference on Pattern Recognition (ICPR), Aug. 2002, Quebec, Canada.
Manigel, J. "Vehicle control by computer vision," Industrial Electronics, IEEE Transactions on, Jun. 1992 v. 39 issue 3, 181-188.
Manigel, W Leonhard, "Computer control of an autonomous road vehicle by computer vision"—Industrial Electronics, Control and Instrumentation, 1991. Proceedings. IECON '91, 1991 International Conference on, p. 19-24 vol. 1.
Margrit Betke et al., "Real-time multiple vehicle detection and tracking from a moving vehicle," 2000.
Martel-Brisson and Zaccarin, "Moving cast shadow detection from a Gaussian mixture shadow model", Proceeding of IEEE Computer Society Conference on Computer Vision and Pattern Recognition, vol. 2.
Matthews, N.D., "Visual Collision Avoidance," Oct. 1994, University of Southampton, PhD submission.
Maurer, et al., "VaMoRs-P: an advanced platform for visual autonomous road vehicle guidance", 1995.
Maurer, M. "Flexible Automatisierung von StraBenfahrzeugen mit Rechnersehen" Universitat der Buneswehr Milnchen Dissertation, Jul. 2000.
MC68331 User's Manual, Freescale Semiconductor, Inc., 1994.
McKenna, et al., "Tracking Groups of People", Computer Vision and Image Understanding, vol. 80.
McTamaney, "Mobile Robots Real-Time Intelligent Control", FMC Corporation, Winter 1987.
Media highlight reel for the National Automated Highway System Consortium's Demo '97, found at https://www.youtube.com/watch?v=6sDmA-sK3aE&list=PL80069F102808FBA3&index=6.
Mei Chen et al., AURORA: A Vision-Based Roadway Departure Warning System, The Robotics Institute, Carnegie Mellon University, published Aug. 9, 1995.
Mendis et al.; "A 128x128 CMOS active pixel image sensor for highly integrated imaging systems", Dec. 8, 1993.
Mendis,Sunetra, et. al., CMOS Active Pixel Image Sensor, IEEE Transactions on Electrron Devices., vol. 41, No. 3, (Mar. 1994).
Metzler, "Computer Vision Applied to Vehicle Operation", Paper from Society of Automotive Engineers, Inc. 1988.
Mikic, et al., "Moving shadow and object detection in traffic scenes", Proceeding of IEEE International Conference on Pattern Recognition, vol. 1.
Miller, Evaluation of vision systems for teleoperated land vehicles, IEEE Control Systems Magazine, Jun. 28, 1988.
Ming-Yang Chern, Ping-Cheng Hou, "The lane recognition and vehicle detection at night for a camera-assisted car on highway", 2003.
Mironer, M., Hendricks, D., "Examination of Single Vehicle Roadway Departure Crashes and Potential IVHS Countermeasures," U.S. Department of Transportation, Aug. 1994.
Mobileye ACP, http://www.mobileye.com/asp4.html, https://web.archive.orwweb/20030205014306/hnp://www.mobileye.com/as.Q4.html, Feb. 5, 2003.
Mobileye General—https://web.archive.orgiweb/20031225105237/http://rnobileye.com/sideMirror.html, Dec. 25, 2003.
Mobileye General—https://web.archive.orwweb/20040202025924/htm://mobil eye.com/asp4.shtml, Feb. 2, 2004.
Mobileye N.V. Introduces Eyeqtm Vision System-On-A-Chip High Performance, Low Cost Breakthrough for Driver Assistance Systems, Detroit, Michigan, Mar. 8, 2004.
Mobileye Side Mirror Jan. 4, https://web.archive.orgiweb/20030304133406/http://www.mobileye.corn/sideM irror.html, Jan. 4, 2003.
Mobileye video available at https://www.youtube.com/user/MobileyeA WS (Mobileye YouTube Channel).
Model-based brightness constraints: on direct estimation of structure and motion; Stein et al., IEEE Transactions on Pattern Analysis and Machine Intelligence, vol. 22, Issue 9, Sep. 2000.
Monitoring Activities from Multiple Video Streams: Establishing a Common Coordinate Frame, Stein, et al., A.I. Memo No. 1655, M.I.T. Artificial Intelligence Laboratory, Apr. 1999.
Moravec, Hans, Obstacle Avoidance and Navigation in the Real World by a Seeing Robot Rover; Computer Science Department, Stanford University, Ph.D. Thesis, Mar. 2, 1980.
Morgan et al., "Road edge tracking for robot road following: a real-time implementation," vol. 8, No. 3, Aug. 1990.
Mori, et al., "Shadow and Rhythm as Sign patterns of Obstacle Detection" 1993.
Morris, S. "E-Z-Pass and transmit using electronic toll tags for traffic monitoring" National Traffic Data Acquisition Conference (*PDF pp. 54-63) 515-911996 *289-298.
Motorola Installation Guide, MVE162, Embedded Controller.
Muirhead, Ian T., Developments in CMOS Camera Technology, The Institution of Electrical Engineers, Dec. 5, 1994.
Multi-frame Infinitesimal Motion Model for the Reconstruction of (Dynamic) Scenes with Multiple Linearly Moving Objects, Shashua, A. and Levin, A., International Conference on Computer Vision (ICCV), Jul. 2001 Vancouver, Canada, pp. 592-599.
Multiple View Geometry of Non-planar Algebraic Curves, Kaminski, J.Y. and Fryers, M. and Shashua, A. and Teicher, M., International Conference on Computer Vision (ICCV), Vancouver, Canada, Jul. 2001, pp. 181-186.
Multiple-view Geometry and Photometry, Shashua, A., In Recent Progress in Computer Vision, Springer-Verlag, LNCS series, Invited papers of ACCV'95, Singapore Dec. 1995, 225-240.
Multiple-view geometry of general algebraic curves, Kaminski, J .Y. and Shashua, A., International Journal of Computer Vision (IJCV), 2004.
Multi-way Clustering Using Super-symmetric Non-negative Tensor Factorization, Shashua, A., Zass, R. and Hazan, T., Proc. of the European Conference on Computer Vision (ECCV), Graz, Austria, May 2006.
Museum of Scotland archives regarding VVL's imputer photos.
Nadimi and Bhanu, "Physical models for moving shadow and object detection in video", IEEE Transactions on Pattern Analysis and Machine Intelligence, vol. 26.
NAHSC TV Coverage Ree http://youtu.be/6sDmA-sK3aE.
Najm, W.; "Comparison of alternative crash-avoidance sensor technologies", Jan. 6, 1995.
Nashman, M., and Schneiderman, H., "Real-time Visual Processing for Autonomous Driving," in Proceedings of the IEEE Intelligent Vehicles, vol. 93, Jun. 1993, pp. 14-16.
Nathan, Digital Video Data Handling, NASA JPL Tech Report 32-877, Pasadena, CA, Jan. 5, 1966.
National Automated Highway Systems Consortium Demonstration video, found at https://www.youtube.com/watch?v=rV0H7u6tmlk&list=PL80069F102808FBA3&index=5.
NavLab 1984-1994 http://youtu.be/5-acCtyKf7E.
Navlab 5-1997—Driving on highways around Pittsburgh http://youtu.be/xkJVV1_4I8E.

(56) **References Cited**

OTHER PUBLICATIONS

Navlab 90 http://youtu.be/OGXuqw3cgwU.
Navlab 96 http://youtu.be/Tat70DqpKw8.
Navlab 97 http://youtu.be/rV0H7u6tmlk.
Navlab on CNN http://youtu.be/bdQ5rsVgPuk.
Navlab on KDKA http://youtu.be/laolqVMd6tc.
Navlab on Scientific American Frontiers http://youtu.be/507-gmGsq1o.
Navon, "SoC IP Qualification & Emulation Environment", Dec. 8-9, 2004.
Nguyen, HG et al., "Obstacle detection using bi-spectrum CCD camera and image processing", Proceedings of the Intelligent Vehicles '92 Symposium, Jun. 29-Jul. 1, 1992, p. 42-50.
Nixon et al., "128X128 CMOS Photodiode-Type Active Pixel Sensor With On-Chip Timing, Control and Signal Chain Electronics" 1995.
No Hands Across America Journal, web page at http://www.cs.cmu.edu/~tjochem/nhaa/Journal.html.
No Hands Across American Official Press Release web page at http://www.cs.cmu.edu/~tjochem/nhaa/official_press_release.html.
Nonnegative Sparse PCA, Zass, R. and Shashua, A., Advances in Neural Information Processing Systems (NIPS), Vancouver, Canada, Dec. 2006.
Non-Negative Tensor Factorization with Applications to Statistics and Computer Vision, Shashua, A. and Hazan, T., International Conference on Machine Learning (ICML), Bonn, Germany, Aug. 2005.
Norm-Product Belief Propagation: Primal-Dual Message-Passing for Approximate Inference, Hazan, T. and Shashua, A., IEEE Trans. on Information Theory, 2010 56(12):629 4-6316.
Novel View Synthesis by Cascading Trilinear Tensors, A vidan, S. and Shashua, A., IEEE Transactions on Visualization and Computer Graphics (TVCG), 4(4), 1998.
Novel View Synthesis in Tensor Space, Avidan, S. (S) and Shashua, A., IEEE Conference on Computer Vision and Pattern Recognition (CVPR), Jun. 1997, pp. 1034-1040.
Off-road Path Following using Region Classification and Geometric Projection Constraints, Alon, Y., Ferencz, A. and Shashua, A., IEEE Conference on Computer Vision and Pattern Recognition (CVPR), Jun. 2006., NY.
Oldenburg, John; "Comments on the Autronic Eye".
Omni-Rig Sensors: What Can be Done With a Non-Rigid Vision Platform?, Shashua, A., Workshop on Applications of Computer Vision (W ACV), pp. 174-179, Princeton, Oct. 1998, pp. 174-179.
Omni-rig: Linear Se(f-recalibration of a Rig with Varying Internal and External Parameters, Zomet, A. and Wolf, L. and Shashua, A., International Conference on Computer Vision (ICCV), Jul. 2001, Vancouver, Canada, pp. 135-141.
On calibration and reconstruction from planar curves, Kaminsky, J.Y. and Shashua, A., European Conference on Computer Vision (ECCV), pp. 256-270, Jun. 2000, Dublin, Ireland, pp. 256-270.
On degeneracy of linear reconstruction from three views: linear line complex and applications, IEEE Transactions on Pattern Analysis and Machine Intelligence, vol. 21, Issue 3, Mar. 1999.
On Degeneracy of Linear Reconstruction from Three Views: Linear Line Complex and Applications, Stein, G. and Shashua, A., IEEE Transactions on Pattern Analysis and Machine Intelligence (P AMI), vol. 21 (3), 1999, pp. 244-251.
On Geometric and Algebraic Aspects of 3D Affine and Projective Structures from Perspective 2D Views, Shashua, A., In Applications of Invariance in Computer Vision, J. Mundy, A. Zisserman & D. Forsyth (eds.), Springer-Verlag LNCS No. 825, 1994, 127-143.
On Photometric Issues in 3D Visual Recognition from a Single 2D Image, Shashua, A., International Journal of Computer Vision (IJCV), 21(1/2), 1997 pp. 99-122.
On Projection Matrices Pk–! P2, k=3, 6, and their Applications in Computer Vision, Wolf, L. and Shashua, A., International Journal of Computer Vision (IJCV), 48(1), 2002, pp. 53-67.
On The Concept of Relative Affine Structure, Shashua, A. and Navab, N., Zeitschrift f'ur Photogrammetrie and Fernerkundung, May 1994 Wichmann Verlag, Karlsruhe, Oct. 1994 pp. 181-189.
On the Relationship Between the Support Vector Machine for classification and Sparsified Fisher's Linear Discriminant, A. Shashua, Neural Processing Letters, 1999, 9(2): 129-139.
On the Reprojection of JD and 2D Scenes Without Explicit Model Selection, Shashua, A. and Avidan, S., European Conference on Computer Vision (ECCV), Jun. 2000, Dublin, Ireland, pp. 468-482.
On the Structure and Properties of the Quadrifocal Tensor, Shashua, A. and Wolf, L., European Conference on Computer Vision (ECCV), Jun. 2000, Dublin, Ireland, pp. 354-368.
On the Synthesis of Dynamic Scenes from Reference Views, Wexler, Y. and Shashua, A., IEEE Conference on Computer Vision and Pattern Recognition (CVPR), Jun. 2000, pp. 133-139.
On the Trilinear Tensor of Three Perspective Views and its Underlying Geometry, Werman, M.(C) and Shashua, A., Proceedings of the Europe-China workshop on Geometrical Modelling and Invariants for Computer Vision, Apr. 1995, Xi'An, China, pp. 110-117.
On the Trilinear Tensor of Three Perspective Views and its Underlying Geometry, Shashua, A. and Werman, M., International Conference on Computer Vision (ICCV), Jun. 1995, Boston, MA, pp. 920-925.
Owings, R. "Event Data Recorders" Summary of findings by the NHTSA EDR Working Group, Aug. 2001.
Pacaud et al., Ground Speed Sensing, Lucas International Symposium, Paris, France (1989).
Paetzold, F. "Interpretation of visually sensed urban environment for a self-driving car" Ruhr-Universitat Bochum, Dissertation, Sep. 2000.
Page et al., Advanced technologies for collision avoidance, Eureka on Campus (Summer 1992).
Paradiso Joseph A. and David B. Goodwin, Wide-Range Precision Alignment for the Gem Muon System, Oct. 1993, 11131-11138.
Paradiso, "Application of miniature cameras in video straightness monitor systems".
Paradiso, "Electronics for precision alignment of the Gem Muon System".
Parent, "Automatic Driving for Small Public Urban Vehicles," Intelligent Vehicles Symposium, Tokyo, Jul. 14-16, 1993.
Parker (ed.), McGraw-Hill Dictionary of Scientific and Technical Terms Fifth Edition. (1993).
Parnell, K.; "Reconfigurable Vehicle". No. 2002-01-0144. SAE Technical Paper, 2002. Xilinx WPI 53, Nov. 19, 2001.
Pelco Fixed Focal Length Lenses Product Specification.
Peng, H., "Vehicle Lateral Control for Highway Automation," Ph.D. Thesis—University of California Berkeley, 1992.
Peng, H., Zhang, W. B., Arai, A., Lin, Y., Hessburg, T., Devlin, P., Masayoshi, T., Shladover, S., "Experimental Automatic Lateral Control System for an Automobile," California Partners for Advanced Transit and Highways (PATH), Jan. 1, 1992.
Philips Components, PCA82C200, Stand-alone CAN-controller, Jan. 22, 1991.
Philomin et al., "Pedestrain Tracking from a Moving Vehicle".
Photographs evidencing a Watec WAT-660D camera and photographs evidencing the mounting bracket used for attaching the WatecWAT-660D, the model of camera which was used as the forward facing camera on Navlab 6.
Piccioli et al., "Robust road sign detection and recognition from image sequences", 1994.
Pilkington Press Releases, "Advanced Technology Benefits 21st Century Motorist", Autumn 1991.
pLSA for Sparse Arrays With Tsallis Pseudo-Additive, Divergence: Noise Robustness and Algorithm, Hazan, T., Hardoon, R. and Shashua, A., International Conference on Computer Vision (ICCV), Rio, Brazil, Oct. 2007.
Pollard, "Evaluation of the Vehicle Radar Safety Systems' Rashid Radar Safety Brake Collision Warning System", Feb. 29, 1988.
Pomerleau, "Alvinn: An Autonomous Land Vehicle in a Neural Network", Technical Report AIP-77 Department of Psychology, Carnegie Mellon University, Mar. 13, 1990.
Pomerleau, "RALPH: Rapidly Adapting Lateral Position Handler", The Robotics Institute, Carnegie Mellon University, Pittsburgh, PA, pp. 506-511.
Pomerleau, D. "Run-off-road collision avoidance using IVHS countermeasures" Task 6 Interim Report, Sep. 10, 1996.

(56) **References Cited**

OTHER PUBLICATIONS

Pomerleau, et al., "Rapidly Adapting Machine Vision for Automated Vehicle Steering", Apr. 30, 1996, pp. 19-27.
Porter et al., "Compositing Digital Images," Computer Graphics (Proc. Siggraph), vol. 18, No. 3, pp. 253-259, Jul. 1984.
Prati, et al. "Detecting moving shadows: algorithms and evaluation", IEEE Transactions on Pattern Analysis and Machine Intelligence, vol. 25.
Pratt, "Digital Image Processing, Passage—ED.3", John Wiley & Sons, US, Jan. 1, 2001, pp. 657-659, XP002529771.
Priese, Lutz, et al., Traffic Sign Recognition Based on Color Image, Universitat Koblenz-Landau, 1993, pp. 95-100.
Principal Component Analysis Over Continuous Subspaces and Intersection of Ha(f-spaces, Levin, A. and Shashua, A., European Conference on Computer Vision (ECCV), May 2002, Copenhagen, Denmark, pp. 133-147.
Probabilistic Graph and Hypergraph Matching, Zass, R. and Shashua, A., Conf. on Computer Vision and Pattern Recognition (CVPR), Jun. 2008, Anchorage, Alaska.
Proceedings of the Intelligent Vehicles Symposium, 1992-present.
Proceedings of the Intelligent Vehicles Symposium, Tokyo, 1993, Jul. 14-16.
Projective Depth: A Geometric Invariant For 3D Reconstruction From Two Perspective/Orthographic Views and For Visual Recognition, Shashua, A., International Conference on Computer Vision (ICCV), May 1993, Berlin, Germany, pp. 583-590.
Projective Structure from Uncalibrated Images: Structure from Motion and Recognition, Shashua, A., IEEE Transactions on Pattern Analysis and Machine Intelligence (P AMI), (vol. 16(8), 1994 pp. 778-790.
Prometheus Press Releases, "European Car Industry Reveals the Future for 21st Century Motorists", Autumn 1991.
Pynn, J., et al. "Automatic identification of cracks in road surfaces" 7th International Conference on Image Processing and its Application, CP465, Jan. 1999, pp. 671-675.
Q-warping: Direct Computation of Quadratic Reference Surfaces, Shashua, A. and Wexler, Y., IEEE Transactions on Pattern Analysis and Machine Intelligence (P AMI), vol. 23(8), 2001, pp. 920-925.
R. Chapuis, F. Marmoiton, R. Aufrere, F. Collange, J-P. Derutin, "Road Detection and Vehicles Tracking by Vision for an On-Board ACC System in the VELAC Vehicle", 2000.
R.N. Tribe et al., Collision Avoidance, Lucas International Symposium, Paris, France (1989).
R.H. Tribe et al., Collision Warning, Autotech '93, Seminar 9, NEC Birmingham, UK (Nov. 1993).
R.N. Tribe, Collision Avoidance, Advances, Issue No. 4, May 1990.
R.H. Tribe, Intelligent Autonomous Systems for Cars, Advanced Robotics and Intelligent Machines, Peter Peregrinus (Nov. 1994).
Raboisson et al.; "Obstacle Detection in Highway Environment by Colour CCD Camera and Image Processing Prototype Installed in a Vehicle".
Radatz, "The IEEE Standard Dictionary of Electrical and Electronics Terms," Sixth Edition, Standards Coordinating Committee 10, Terms and Definitions.
Raglan Tribe Video-1994 ; 1994; Raglan Tribe; "Robot Car Raglan Tribe" http://www.youtube.com/watch?v=AILZhcnpXYI.
Ramesh et al., "Real-Time Video Surveillance and Monitoring for Automotive Applications", Mar. 6, 2000.
Ran, et al. "Development of Vision-based Vehicle Detection and Recognition System for Intelligent Vehicles", 1999.
Rayner, G., et al. "I-Witness Black Box Recorder" Intelligent Transportation Systems Program, Final Report for ITS-IDEA Project 84, Nov. 2001.
Raytheon Commercial Infrared and ELCAN-Teaxs Optical Technologies, "NightDriver Thermal Imaging Camera and HUD Development Program for Collision Avoidance Applications", 2000.
Recognition (CVPR), Dec. 2001, Hawaii, pp. 623-630.
Redmill, "The OSU Autonomous Vehicle", 1997.
Regensburger, Uwe and Volker Graef, "Visual Recognition of Obstacles on Roads", 1994.
Reichardt, "Continuous behavior control of an autonomous vehicle in a dynamic environment", 1996.
Reichardt, D. "Kontinuierliche Verhaltenssteuerung eines autonomen Fahrzeugs in dynamischer Umgebung" Universitat Kaisserslautern Dissertation, Jan. 1996.
Reid, Vision-based guidance of an agriculture tractor, IEEE Control Systems Magazine, Apr. 30, 1987.
Reisman, et al., "Crowd Detection in Video Sequences IEEE, Intelligent Vehicles Symposium", Jan. 1, 2004.
Relative Affine Structure: Canonical Model for 3D from 2D Geometry and Applications, Shashua, A. and Navab, N., IEEE, Transactions on Pattern Analysis and Machine Intelligence (P AMI) vol. 18(9), 1996 pp. 873-883.
Relative Affine Structure: Theory and Application for 3D Reconstruction From Perspective Views, Shashua, A. and Navab, N., IEEE Conference on Computer Vision and Pattern Recognition (CVPR), Jun. 1994, Seattle, Washington, pp. 483-489.
Research & Development, "Advanced technologies for collision avoidance", Summer 1992.
Revisiting Single-view Shape Tensors: Theory and Applications, Levin, A. and Shashua, A., European Conference on Computer Vision (ECCV), May 2002, Copenhagen, Denmark, pp. 256-270.
Rhodes, P. "A look into the microchip future", Oct. 15, 1991.
Ritter et al., "Traffic sign recognition using colour information", Oct. 1995.
Ritter, W., Traffic Sign Recognition in Color Image Sequences, Institute for Information Technology, 1992, pp. 12-17.
Roberts, J.M., "Attentive Visual Tracking and Trajectory Estimation for Dynamic Scene Segmentation," Dec. 1994, University of Southampton, PhD submission.
Robotics Institute Carnegie Mellon University, "Run-Off-Road Collision Avoidance Using lvhs Countermeasures", 1996.
Robotics Institute, "Run-Off-Road Collision Avoidance Using lvhs Countermeasures" Sep. 10, 1996.
Robust Recovery of Camera Rotation from Three Frames, Rousso, B. and Avidan, S. and Shashua, A. and Peleg, S., IEEE Conference on Computer Vision and Pattern Recognition (CVPR), Jun. 1996, San Francisco, CA, pp. 796-802.
Rombaut et al.; "Dynamic data temporal multisensory fusion in the Prometheus ProLab2 demonstrator", IEEE Paper, 1994.
Ross, Bill, A Practical Stereo Vision System, Aug. 25, 1993.
Rowell, J. Martin, "Applying Map Databases to Advanced Navigation and Driver Assistance Systems", 2001.
Run-Off-Road Project Final Video http://youtu.be/nzxfMzVmnhM.
SAE International, "Development of a Camera-Based Forward Collision Alert System", Apr. 12, 2011.
SAE Paper No. 750364 to Nolan, published Feb. 1, 1975.
SAE Paper No. 770274 to Smith, published Feb. 1, 1977.
SAE Paper No. 860173 to Ortega, published Mar. 1, 1986.
SAE Paper No. 871288 to Otsuka, published Nov. 8, 1987.
SAE Paper No. 890282 to Corsi, published Feb. 1, 1989.
SAE Paper No. 890283 to Brandt, published Feb. 1, 1989.
SAE Paper No. 890288 to Weihrauch and Goesch, published Feb. 1, 1989.
SAE Paper No. 930456 to Gumkowski, published Mar. 1, 1993.
SAE Technical Paper 2001-01-0072—LIN.
SafeTRAC Lane Departure Warning http://youtu.be/yPHkQfyO15g.
Sahli et al., "A Kalman Filter-Based Update Scheme for Road Following," IAPR Workshop on Machine Vision Applications, pp. 5-9, Nov. 12-14, 1996.
Salvador, et al., "Cast shadow segmentation using invariant color features", Computer Vision and Image Understanding, vol. 95.
Sanders, J. "Speed Racers": Study to monitor driver behavior to determine the role of speed in crashes Georgia Research Tech News, Aug. 2002.
Sayer, et al., "The Effect of Lead-Vehicle Size on Driver Following Behavior", 2000.
Schneiderman, H. and Nashman, M., "Visual Processing for Autonomous Driving," IEEE Workshop on Applications of Computer Vision, Palm Springs, CA, Nov. 30-Dec. 2, 1992.
Schönfeld et al.; Compact Hardware Realization for Hough Based Extraction of Line Segments in Image Sequences for Vehicle Guidance, IEEE Paper, 1993.

(56) **References Cited**

OTHER PUBLICATIONS

Schumann, J., Godthelp, J. and Hoekstra, W.H., "An Exploratory Simulator Study on the Use of Active Control Devices in Car Driving," No. IZF-1992-B-2. Institute For Perception RVO-TNO Soesterberg (Netherlands), May 1992.
Schwarzinger et al., "Vision-based car-following: detection, tracking, and identification", Jul. 1, 1992.
Scott, David, Video Image on a Chip; Popular Science, vol. 237, No. 3, Sep. 1991, pp. 50.
Seelen, "Image Processing for Driver Assistance", 1998.
Seger, Ulrich et. al., Vision Assistance in Scenes with Extreme Contrast, IEEEMicro (Feb. 1993).
Shafer, Automation and Calibration for Robot Vision Systems; National Science Foundation, May 12, 1988.
Shape Tensors for Efficient and Learnable Indexing, Weinshall, D., and Werman, M. and Shashua, A., Proceedings of the workshop on Scene Representations, Jun. 1995, Cambridge, MA, pp. 58-65.
ShareBoost: Efficient Multiclass Learning with Feature Sharing, Neural Information and Processing Systems (NIPS), Shalev-Schwartz, S., Wexler, Y. and Shashua, A., Dec. 2011.
Shashua, et al., "Pedestrian Detection for Driving Assistance, Systems: Single- Frame Classification and System Level, Performance IEEE Intelligent Vehicles Symposium", Jan. 1, 2004.
Shimizu, S. et al.; "A moving image processing system for personal vehicle system", Nov. 9, 1992.
Shirai, 1985, "Future Generation Computer Systems".
Shirakawa, H. "On-vehicle image pick-up device" Mitsubishi Electric Corp.
Shladover, S.E., "Research and Development Needs for Advanced Vehicle Control Systems," Micro, IEEE, vol. 13, No. 1, Feb. 1993, pp. 11-19.
Shladover, S.E., "Highway Electrification and Automation," California Partners for Advanced Transit and Highways (PATH), Jan. 1, 1992.
Shladover, S.E., Desoer, C.A., Hendrick, J.K., Tomizuka, M., Walrand, J., Zhang, W., McMahon, D.H., Peng, H., Sheikholeslam, S., McKeown, N., "Automatic Vehicle Control Developments in the PATH Program," IEEE Transaction on Vehicular Technology, vol. 40, No. 1, Feb. 1991, pp. 114-130.
Siala, et al., "Moving shadow detection with support vector domain description in the color ratios space", Proceeding of IEEE International Conference on Pattern Recognition. vol. 4.
Siegle, G. "Autonomous Driving on a Road Network," Proceedings of the Intelligent Vehicles '92 Symposium Detroit, Michigan, ISBN 0/7803-0747-X; Jun. 29-Jul. 1, 1992.
Smith et al., "Optical sensors for automotive applications" May 11, 1992.
Smith et al., "Vision sensing for intelligent vehicle and highway systems" Oct. 5, 1994.
Soatto, Journal of Field Robotics 23(8), 2006, pp. 527-553.
Solder, et al., "Visual Detection of Distant Objects", 1993.
Solid or not solid: vision for radar target validation, Stein et al., IEEE Intelligent Vehicles Symposium, 2004.
Sony Operating Manual CCD Color Video Camera Model: DXC-151A, 1993.
Sony Specifications Single Chip CCD Color Video Camera DXC-151A.
Sparse Image Coding using a 3D Non-negative Tensor Factorization, Hazan, T.(S), Polak, S. and Shashua, A., International Conference on Computer Vision (ICCV), Beijing, China, Oct. 2005.
Sridhar, Multirate and event-driven Kalman filters for helicopter flight; IEEE Control Systems, Aug. 15, 1993.
Standard J2284/3, "High-Speed CAN (HSC) for Vehicle Applications at 500 Kbps," issued May 30, 2001.
Stander, et al., "Detection of moving cast shadows for object segmentation", IEEE Transactions on Multimedia, vol. 1.
Stein et al., "A robust method for computing vehicle ego-motion", Proceedings of the IEEE Intelligent Vehicles Symposium, 2000.
Steiner P., et al. "Future applications or microsystem technologies in automotive safety systems" Advanced Microsystems for Automotive Applications '98, 1998, pp. 21-42.
Stengel, et al., 1989, "Intelligent Guidance for Headway and Lane Control".
Stereo-assist: Top-down stereo for driver assistance systems, Stein et al., IEEE Intelligent Vehicles Symposium, 2010.
Stereo-Assist: Top-down Stereo for Driver Assistance Systems, Stein, G.P., Gdalyahu, Y. and Shashua, A., Proc. of the IEEE, Intelligent Vehicles Symposium (IV2010), San Diego, CA, Jun. 2010.
Stickford, "Candid cameras come to Park", 1996.
Stiller, et al., "Multisensor obstacle detection and tracking", 2000, pp. 389-396.
Structural Saliency: the Detection of Globally Salient Structures Using a Locally Connected Network, Shashua, A. and Ullman, S., International Conference on Computer Vision (ICCV), Dec. 1988, Tarpon Springs, Florida, pp. 321-327.
Sukthankar, "RACCOON: A Real-time Autonomous Car Chaser Operating Optimally at Night", Oct. 1992.
Sun et al., "On-road vehicle detection using optical sensors: a review", 2004.
Sun, et al., "A Real-time Precrash Vehicle Detection System", 2002.
Supt W Eaton, "Video Incident Capture System", Sep. 1991.
Szeliski, Image Mosaicing for Tele-Reality Applications, DEC Cambridge Research Laboratory, CRL 94/2, May 1994.
Taktak et al., "Vehicle detection at night using image processing and pattern recognition", 1994.
Tappen, et al., "The seeing passenger car 'VaMoRs-P'", 1994, pp. 1459-1472.
Taxonomy of Large Margin Principle Algorithms for Ordinal Regression Problems, Shashua, A. and Levin, A., Advances in Neural Information Processing Systems (NIPS), Vancouver, Canada, Dec. 2002.
Tensor Embedding of the Fundamental Matrix, Avidan, S(S) and Shashua, A., Post-ECCV SMILE Workshop, Jun. 1998, Frieburg, Germany. Springer LNCS series, vol. 1506, 1998, pp. 133-148.
Tetsushi, M., et al. "Functions and Devices of Mitsubishi Active Safety ASV" Proceedings of the 1996 IEEE Intelligent Vehicles Symposium, Sep. 19-20, 1996.
The Golem Group I UCLA Autonomous Ground Vehicle in the DARPA Grand Challenge, R. Mason, J. Radford, D. Kumar, R. Walters, B. Fulkerson, E. Jones, D. Caldwell, J. Meltzer, Y. Alon, A. Shashua, H. Hattori, N. Takeda, E. Frazzoli, and S.
The Quadric Reference Surface: Applications in Registering Views of Complex 3D Objects, Shashua, A. and Toelg, S., European Conference on Computer Vision (ECCV), May 1994, Stockholm, Sweden, pp. 407-416.
The Quadric Reference Surface: Theory and Applications, Shashua, A. and Toelg, S., International Journal of Computer Vision (IJCV), 23(2), 1997, pp. 185-198.
The Quotient Image: Class Based Recognition and Synthesis Under Varying Illumination Conditions, Riklin Raviv, T. and Shashua, A., IEEE Conference on Computer Vision and Pattern Recognition (CVPR), Jun. 1999, pp. 566-573.
The Quotient Image: Class Based Re-rendering and Recognition With Varying Illuminations, Shashua, A. and Riklin Raviv, T., IEEE Transactions on Pattern Analysis and Machine Intelligence (PAMI), vol. 23(2), 2001, pp. 129-139.
The Rank 4 Constraint in Multiple (3) View Geometry, Shashua, A. and Avidan, S., European Conference on Computer Vision (ECCV), Apr. 1996, Cambridge, United Kingdom, pp. 196-206.
The Semi-Explicit Shape Model for Multi-object Detection and Classification, Polak, S. and Shashua, A., Proc. of the European Conference on Computer Vision (ECCV), Crete, Greece, Sep. 2010.
Thomanek et al.; "Multiple object recognition and scene interpretation for autonomous road vehicle guidance" Oct. 1994.
Thomas; Real-time vision guided navigation, Engineering Applications of Artificial Intelligence, Jan. 31, 1991.
Thongkamwitoon, and, Chalidabhongse, "An adaptive real-time background subtraction and moving shadows detection", Proceeding of IEEE International Conference on Multimedia and Expo. vol. 2.
Thorpe, et al, "Toward autonomous driving: the CMU Navlab. I. Perception", IEEE Paper 1991.

(56) **References Cited**

OTHER PUBLICATIONS

Thorpe, et al., "The 1997 Automated Highway Free Agent Demonstration", 1997 pp. 496-501.6049.
Thorpe, Vision and Navigation for the Carnegie-Mellon Navlab, IEEE Transactions on Pattern Analysis and Machine Intelligence, vol. 10, No. 3, May 1998.
Thorpe, Vision and Navigation: The Carnegie Mellon Navlab (The Springer International Series in Engineering and Computer Science).
Thorpe; "1988 Year End Report for Road Following at Carnegie Mellon", May 31, 1989.
Threading Fundamental Matrices, Avidan, S. and Shashua, A., IEEE Transactions on Pattern Analysis and Machine Intelligence (PAMI), vol. 23(1), 2001, pp. 73-77.
Threading Kerne/functions: on Bridging the Gap between Representations and Algorithms, Shashua, A. and Hazan, T., Advances in Neural Information Processing Systems (NIPS), Vancouver, Canada, Dec. 2004.
Time-varying Shape Tensors for Scenes with Multiply Moving Points, Levin, A., Wolf, L. and Shashua, A., IEEE Conference on Computer Vision and Pattern.
Tokimaru et al., "CMOS Rear-View TV System with CCD Camera", National Technical Report vol. 34, No. 3, pp. 329-336, Jun. 1988 (Japan).
Toth, et al., "Detection of moving shadows using mean shift clustering and a significance test", Proceeding of IEEE International Conference on Pattern Recognition, vol. 4.
Toyota Motor Corporation, "Present and future of safety technology development at Toyota." 2004.
Tracking from multiple view points: Self-calibration of space and time, G.P. Stein, IEEE Computer Society Conference on Computer Vision and Pattern Recognition, Jun. 1999.
Trajectory Triangulation over Conic Sections, Shashua, A., Avidan, S. and Werman, M., International Conference on Computer Vision (ICCV), Greece, 1999, pp. 330-337.
Trajectory Triangulation: 3D Reconstruction of Moving Points from a Monocular Image Sequence, Avidan, S.(S)and Shashua, A., IEEE Transactions on Pattern Analysis and Machine Intelligence (PAMI), vol. 22(4), 2000, pp. 348-357.
Tremblay, M., et al. High resolution smart image sensor with integrated parallel analog processing for multiresolution edge extraction, Robotics and Autonomous Systems 11 (1993), pp. 231-242, with abstract.
Trilinear Tensor: The Fundamental Construct of Multiple-view Geometry and its Applications, Shashua, A., International Workshop on Algebraic Frames For The Perception Action Cycle (AFPAC97), Kiel Germany Sep. 8-9, 1997. Proceedings appeared in Springer-Verlag, LNCS series, 1997, 190-206.
Trilinearity in Visual Recognition by Alignment, Shashua, A., European Conference on Computer Vision (ECCV), May 1994, Stockholm, Sweden, pp. 479-484.
Trivdei, et al., "Distributed Video Networks for Incident Detection and Management", 2000.
Tsugawa et al., "An automobile with artificial intelligence," in Proc. Sixth IJCAI, 1979.
Tsugawa, S. et al., "Vision-based vehicles in japan; machine vision systems and driving control systems", Aug. 1994.
Tsutsumi, K., et al. "Vehicle Distance Interval Control Technology" Mitsubishi Electric Advance, vol. 78, Mar. 1997, pp. 10-12.
Turk et al., "VITS-A Vision System for Autonomous Land Vehicle Navigation," IEEE, 1988.
Twilight Sentinel headlamp control, including public use and sales of vehicles including such systems, and associated advertisements and service manuals, 1960-1998.
Two-body Segmentation from Two Perspective Views, Wolf, L. and Shashua, A., IEEE Conference on Computer Vision and Pattern Recognition (CVPR), Dec. 2001, Hawaii, pp. 263-270.
Tzomakas and von Seelen, "Vehicle Detection in Traffic Scenes Using Shadows," Internal report, Institut Für Neuroinformatik Bochum, Internal Report 98-06.
Ulmer, "Road recognition from multifocal vision", 1994.
Ulmer, B. "VITA II—active collision avoidance in real traffic" Proceedings of the Intelligent Vehicles '94 Symposium, Oct. 24-26, 1994.
Valeo Infos News, "Valeo's revolutionary Lane Departure Warning System makes debut on Nissan Infinit vehicles", 04.08 found at http://www.valeo.com/cwscontent/www.valeo.com/medias/fichiers/journalistes/en/CP/ldws_uk.pdf.
Van Leeuwen et al., "Motion Estimation with a Mobile Camera for Traffic Applications", IEEE, US, vol. 1, Oct. 3, 2000, pp. 58-63.
Van Leeuwen et al., "Motion Interpretation for In-Car Vision Systems", IEEE, US, vol. 1, Sep. 30, 2002, p. 135-140.
Van Leeuwen et al., "Real-Time Vehicle Tracking in Image Sequences", IEEE, US, vol. 3, May 21, 2001, pp. 2049-2054, XP010547308.
Van Leeuwen et al., "Requirements for Motion Estimation in Image Sequences for Traffic Applications", IEEE, 2000, pp. 354-359, XP002529773.
Van Leeuwen et al., "Requirements for Motion Estimation in Image Sequences for Traffic Applications", IEEE, US, vol. 1, May 24, 1999, pp. 145-150, XP010340272.
Vellacott, Oliver, "CMOS in Camera," IEE Review, pp. 111-114 (May 1994).
Vision-based ACC with a single camera: bounds on range and range rate accuracy, Stein et al., IEEE Intelligent Vehicles Symposium, 2003.
Vlacic et al., (Eds), "Intelligent Vehicle Technologies, Theory and Applications", Society of Automotive Engineers Inc., edited by SAE International, 2001.
Vosselman et al.; "Road tracking by profile matching and Kalman filtering", 1995.
Wallace, R., Matsuzaki, K., Goto, Y., Crisman, J., Webb, J., Kanade, T., "Progress in Robot Road-Following," Proceedings of the 1986 IEEE International Conference on Robotics and Automation, vol. 3, 1986, pp. 1615-1621.
Wan et al.; "A New Edge Detector for Obstacle Detection with a Linear Stereo Vision System".
Wang et al., CMOS Video Cameras, article, 1991, 4 pages, University of Edinburgh, UK.
Wang, et al., "A probabilistic method for foreground and shadow segmentation", Proceeding of IEEE International Conference on Image Processing, vol. 3.
Wang, Ling, Camera Calibration by Vanishing Lines for 3-D Computer Vision; IEEE Transactions on Pattern Analysis and Machine Intelligence, Apr. 15, 1991.
Watt John L., et al., Analog VLSI systems for Image Acquisition and Fast Early Vision Processing, International Journal of Computer Vision, 8:3,, 1992, pp. 217-230.
Web page at http://www.glassrack.net/potrsp1919192.html?utm_source=googlepepla&utm_medium=adwords&id=116297830341.
Webpage: http://parts.royaloakschevy.com/showAssembly.aspx?makeName=pontiac&modelYear=1990&modelName=transsport&ukey_assembly=5888560&ukey_category=53643&assembly=921201mu10-009mu10-009.
Weisser, H., et al. "Autonomous driving on vehicle test tracks: Overview, implementation and vehicle diagnosis" Intelligent Transportation Systems, Proc., Oct. 5-8, 1999, pp. 62-67.
Wierwille W., et al. "Research on Vehicle-Based Driver Status/Performance Monitoring, Part I" Final Report, Sep. 1996.
Wiles, C.; "Science: Next, the cars that can see in the dark Charles Wiles on a battlefield camera that works with a pilot's aid to help reduce road accidents", Oct. 20, 1993.
Wilson, Richard, "A little camera with big ideas".
Wolberg, "A Two-Pass Mesh Warping Implementation of Morphing," Dr. Dobb's Journal, No. 202, Jul. 1993.
Wolberg, Digital Image Warping, IEEE Computer Society Press, 1990.
Wright, "Take your hands off that car!", Dec. 18, 1997.
Wüller, Dietmar; Helke Gabele; The usage of digital cameras as luminance meters. Proc. SPIE 6502, Digital Photography III, 65020U (Feb. 20, 2007); doi:10.1117/12.703205.
Xie et al., Active and Intelligent Sensing of Road Obstacles: Application to The European Eureka-PROMETHEUS Project, IEEE Paper, 1993.

(56) **References Cited**

OTHER PUBLICATIONS

Xu, et al., "Cast shadow detection in video segmentation", Pattern Recognition Letters, vol. 26.
Xu, J., et al. "3 DOF modular eye for smart car" Intelligent Transportation Systems, 1999. Proc., Oct. 5-8, 1999, pp. 501-505.
Yee, "Portable Camera Mount", Feb. 1986.
Yeh et al., 1994, "Image-Based Dynamic Measurement for Vehicle Steering Control".
Yerazunis et al., "An Inexpensive, All Solid-state Video and Data Recorder for Accident Reconstruction", Mar. 1, 1999.
Yerazunis, W.S., et al. "An inexpensive, all solid-state video and data recorder for accident reconstruction" Mitsubishi Technical Report TR-99-29 (Presented at the 1999 SAE International Congress and Exposition, Detroit, Michigan, Mar. 3, 1999.), Apr. 24, 1999.
Yoneyama, et al., "Moving cast shadow elimination for robust vehicle extraction based on 2D joint vehicle/shadow models", Proceeding of IEEE International Conference on Advanced Video and Signal Based Surveillance.
Yoneyama, et al., "Robust vehicle and traffic information extraction for highway surveillance", EURASIP Journal on Applied Signal Processing. vol. 2005.
Young et al. "Improved Obstacle Detection by Sensor Fusion" IEE Colloquium on "Prometheus and DRIVE", Oct. 15, 1992.
Young et al., Cantata: Visual Programming Environment for the Khoros System, ACM SIGGRAPH Computer Graphics-Special focus: modular visualization environments (MVEs), vol. 29, issue 2.
Yu et al.; "Vehicles Recognition By Video Camera" 1995.
Yu, X., Road tracking, lane segmentation and obstacle recognition by mathematical morphology, Intelligent Vehicles '92 Symposium, Proceedings of the, p. 166-172.
Yuji, Arai, et al. "Accidents and Near-Misses Analysis by Using Video Drive- Recorders in a Fleet Test", Proceedings of the 17th International Technical Conference on the Enhanced Safety of Vehicles (ESV) Conference, Jun. 4-7, 2001 Amsterdam, The Netherlands, National Highway Traffic Safety Administration, Washington, DC. HS 809 220, Jun. 2001.
Zheng et al., "An Adaptive System for Traffic Sign Recognition," IEEE Proceedings of the Intelligent Vehicles '94 Symposium, pp. 165-170 (Oct. 1994).
Zidek, Lane Position Tracking.
Zigman, Light Filters to Improve Vision; Optometry and Vision Science, Apr. 15, 1992.

* cited by examiner

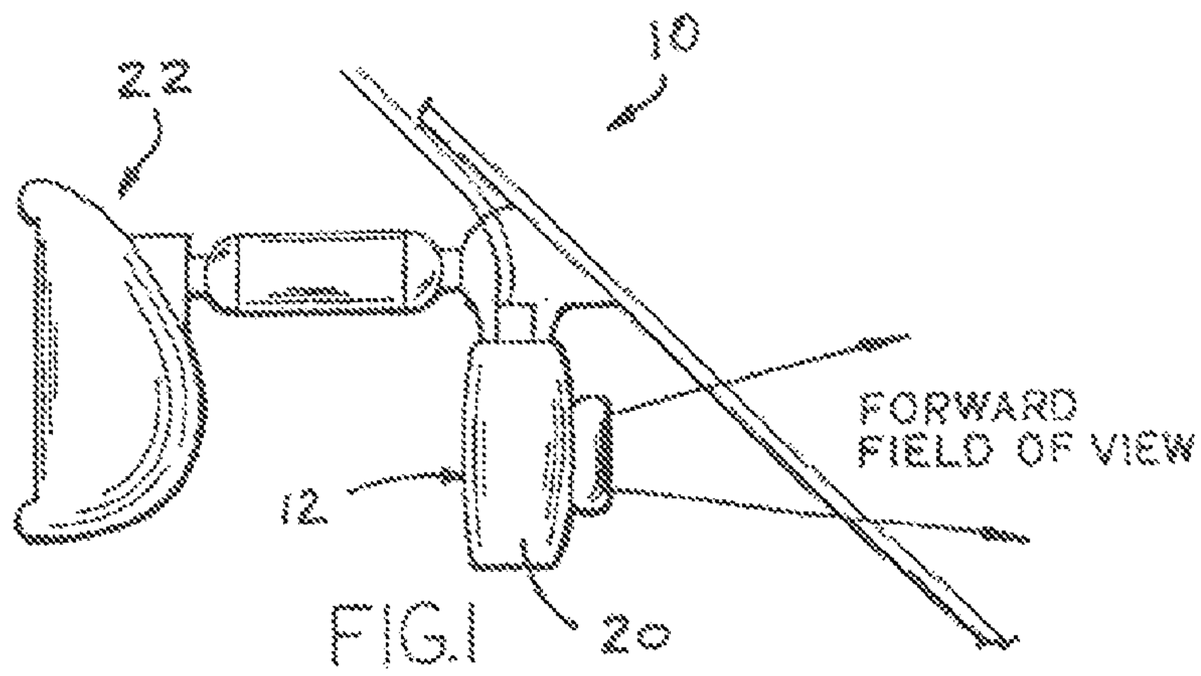
10
22
FORWARD
FIELD OF VIEW
12
20

FIG.1

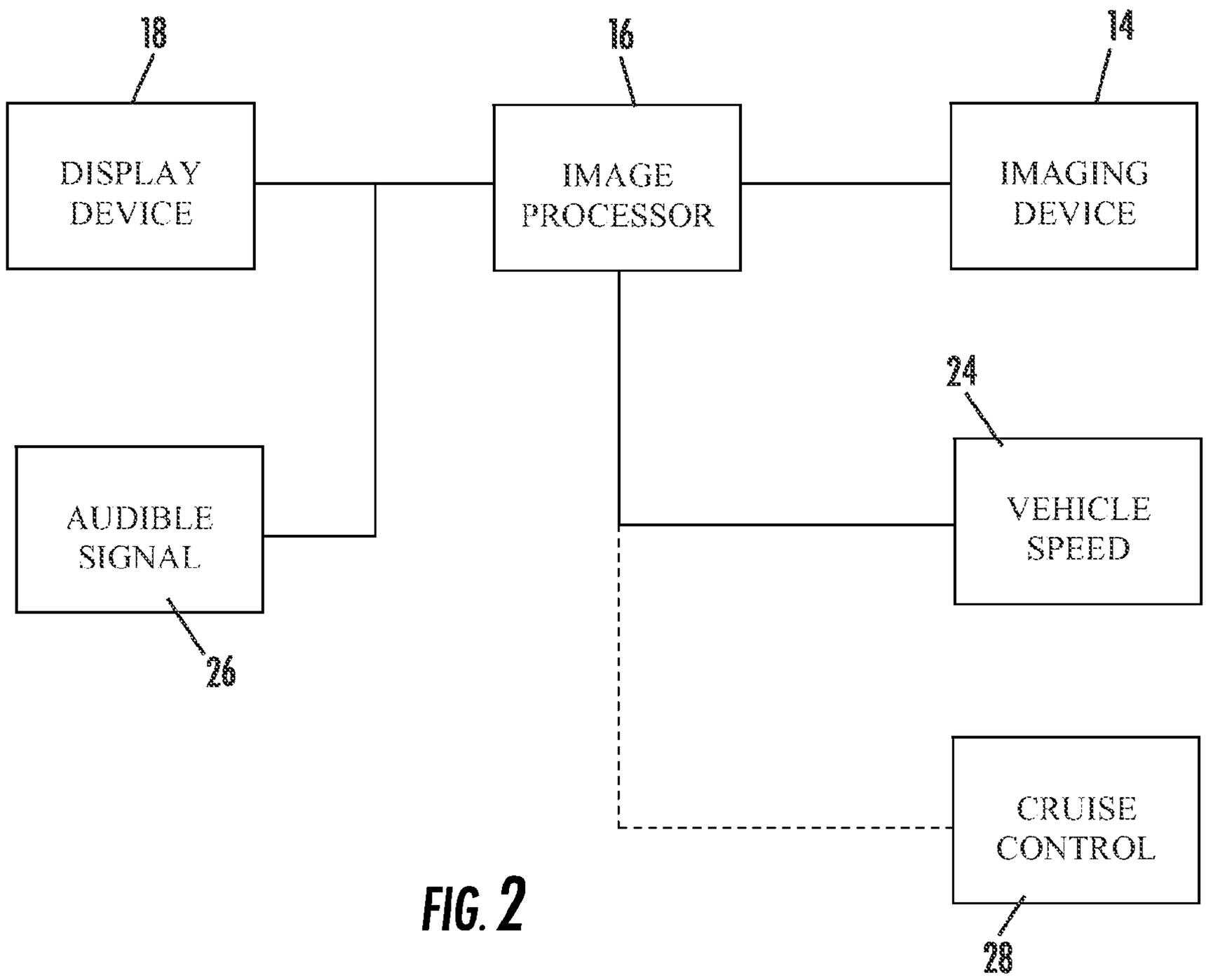
18
DISPLAY DEVICE
16
IMAGE PROCESSOR
14
IMAGING DEVICE
24
VEHICLE SPEED
AUDIBLE SIGNAL
26
CRUISE CONTROL
28

FIG. 2

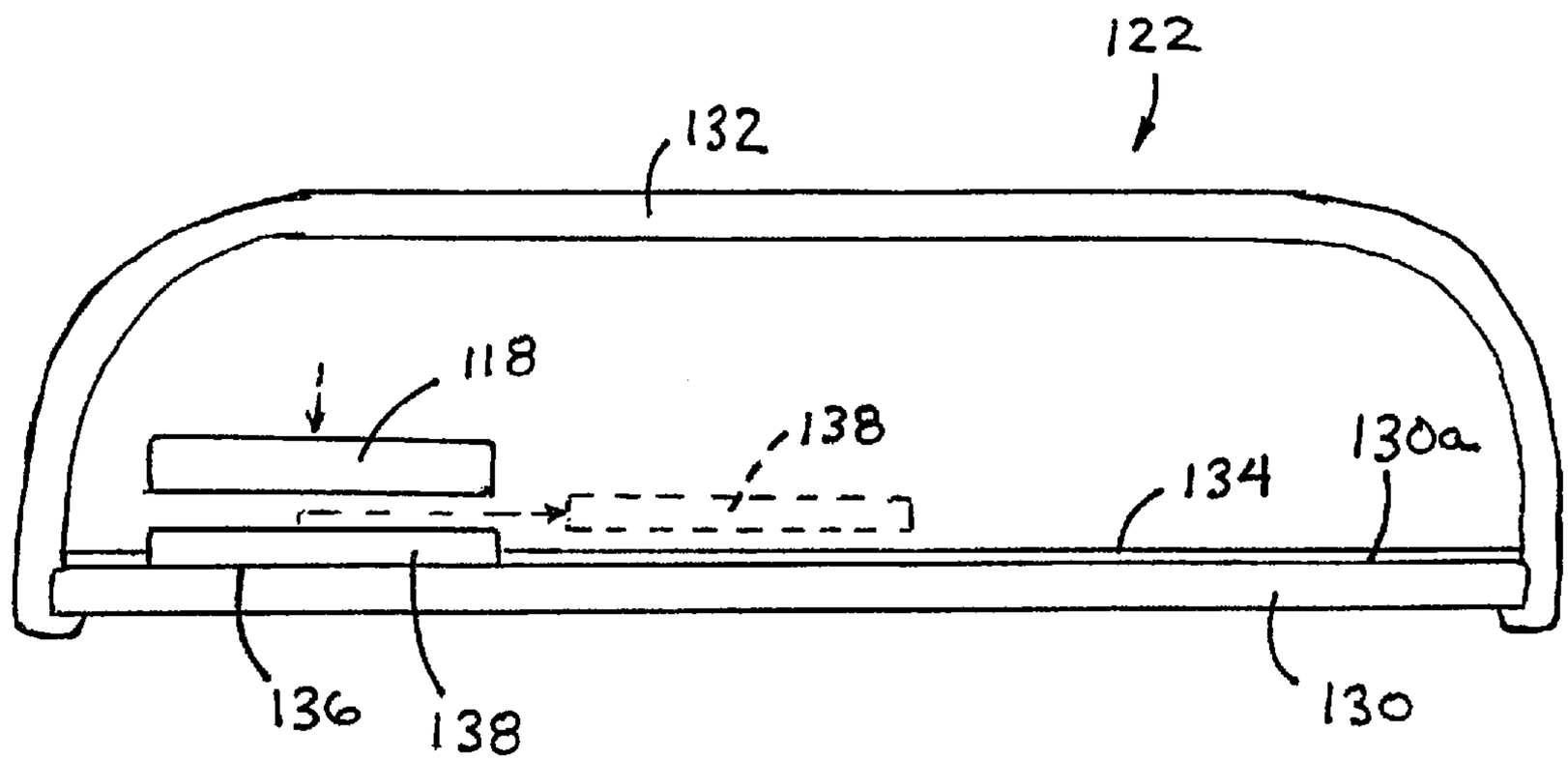

FIG. 3

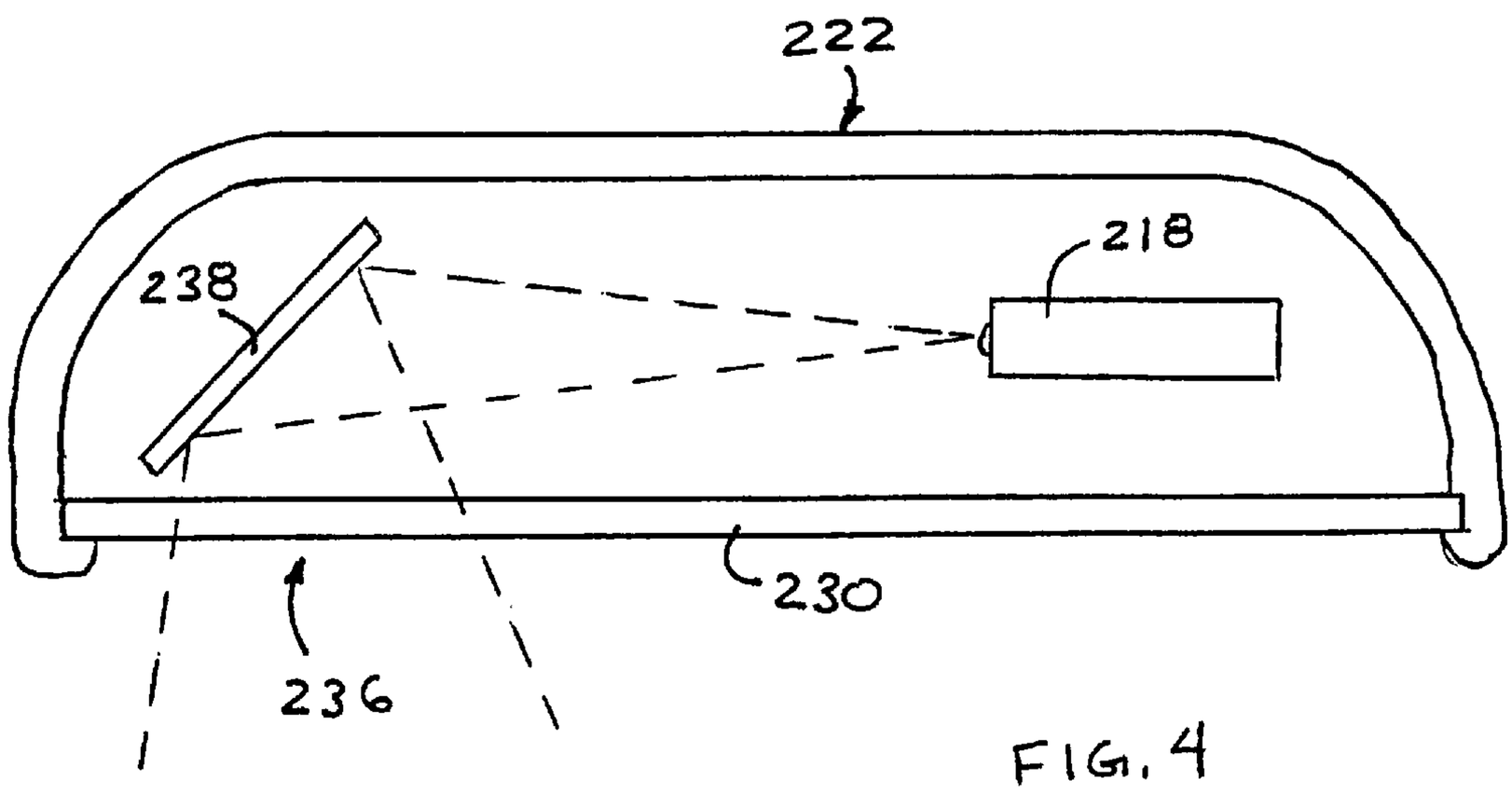

FIG. 4

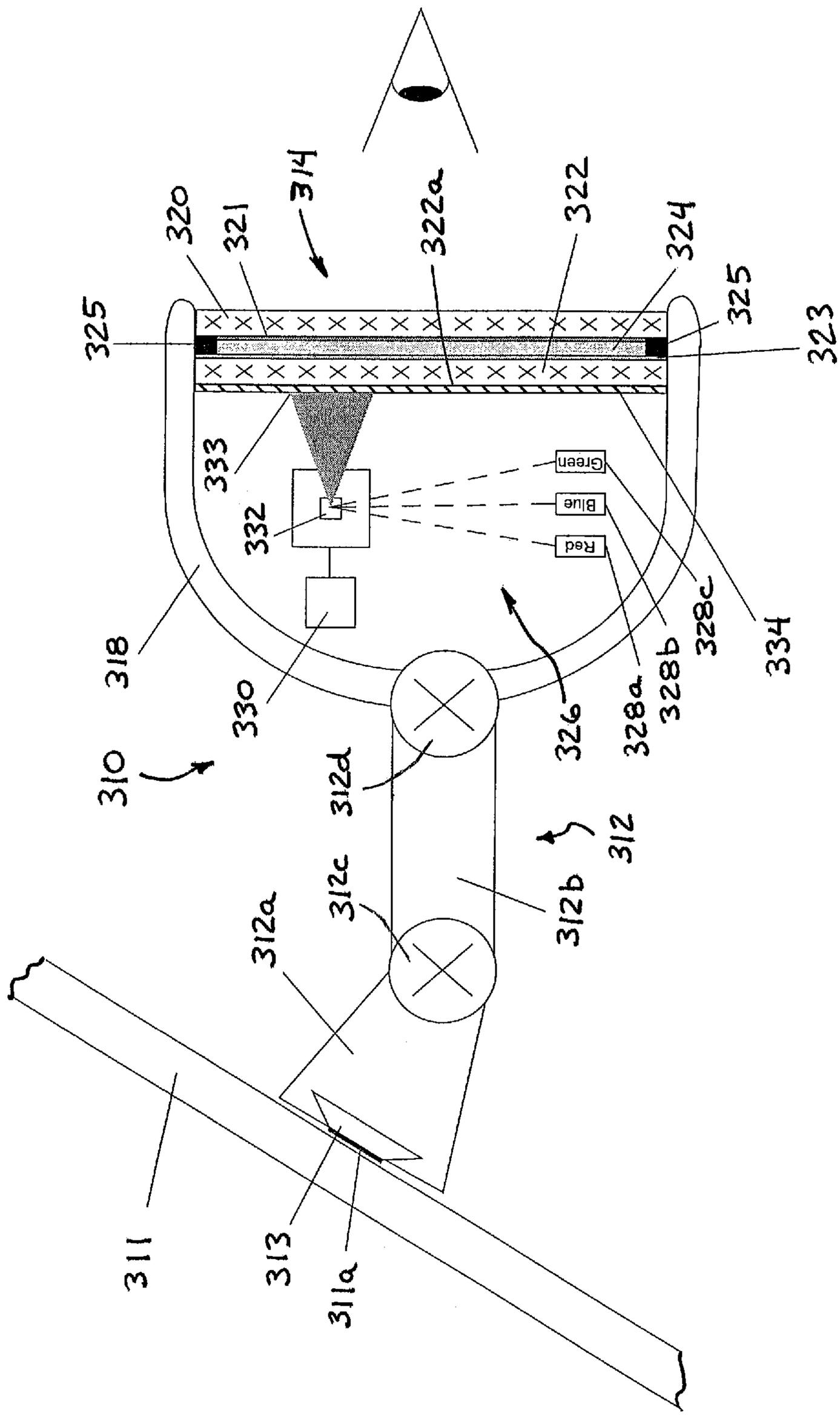
314
320
321
322a
322
324
325
325
323
333
332
Green
Blue
Red
318
330
310
326
328a
328b
328c
334
312d
312
312b
312c
312a
311
313
311a

FIG. 5

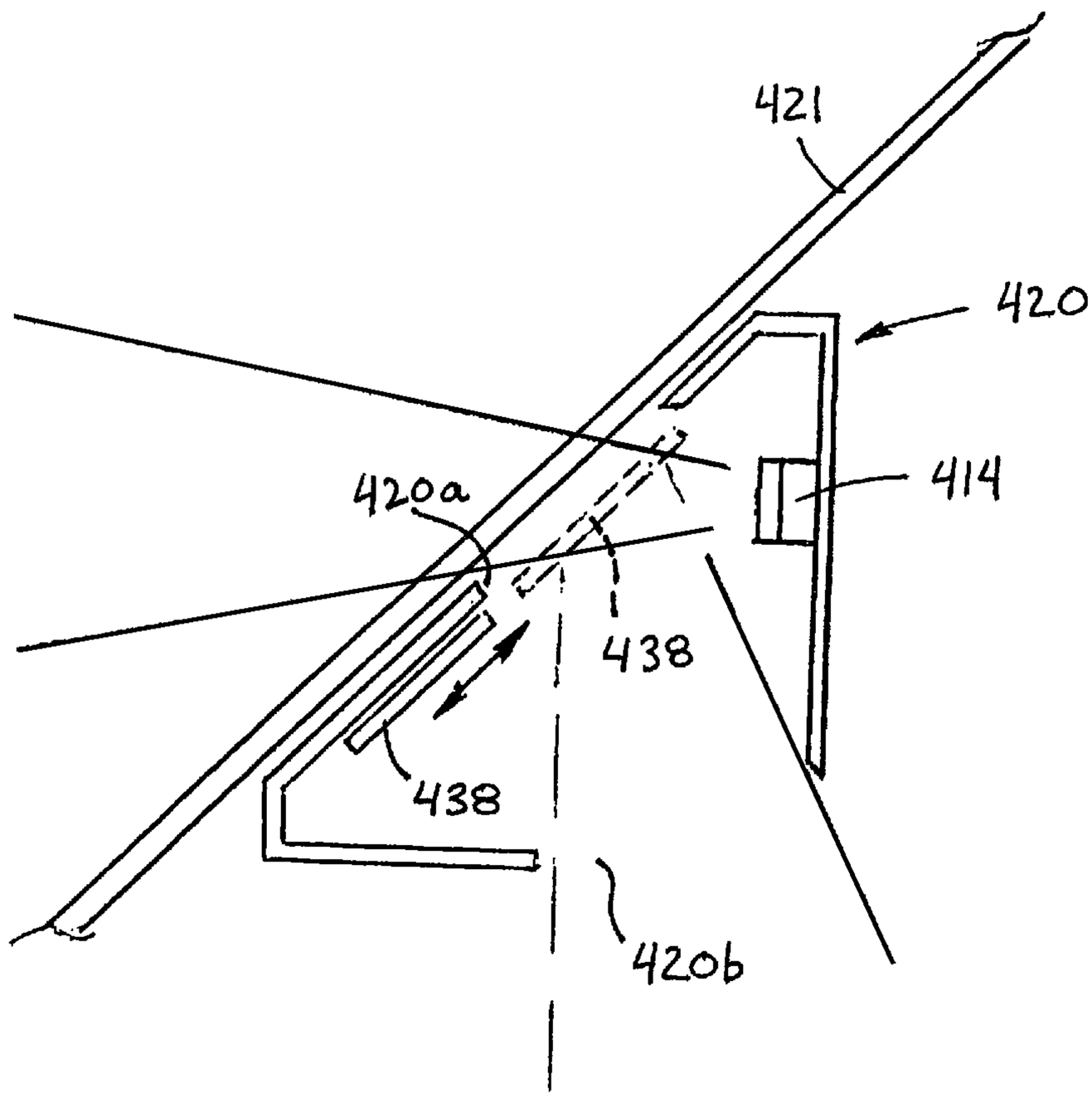

FIG. 6

VISION SYSTEM FOR VEHICLE

CROSS REFERENCE TO RELATED APPLICATIONS

The present application is a continuation of U.S. patent application Ser. No. 14/467,296, filed Aug. 25, 2014, now U.S. Pat. No. 9,008,369, which is a continuation of U.S. patent application Ser. No. 14/082,577, filed Nov. 18, 2013, now U.S. Pat. No. 8,818,042, which is a continuation of U.S. patent application Ser. No. 13/689,796, filed Nov. 30, 2012, now U.S. Pat. No. 8,593,521, which is a continuation of U.S. patent application Ser. No. 13/335,125, filed Dec. 22, 2011, now U.S. Pat. No. 8,325,986, which is a continuation of U.S. patent application Ser. No. 13/107,318, filed May 13, 2011, now U.S. Pat. No. 8,090,153, which is a continuation of U.S. patent application Ser. No. 12/979,499, filed Dec. 28, 2010, now U.S. Pat. No. 7,949,152, which is a continuation of U.S. patent application Ser. No. 12/856,737, filed Aug. 16, 2010, now U.S. Pat. No. 7,873,187, which is a continuation of U.S. patent application Ser. No. 12/606,476, filed Oct. 27, 2009, now U.S. Pat. No. 7,792,329, which is a continuation of U.S. patent application Ser. No. 12/429,605, filed Apr. 24, 2009, now U.S. Pat. No. 7,616,781, which is a continuation of U.S. patent application Ser. No. 11/105,757, filed Apr. 14, 2005, now U.S. Pat. No. 7,526,103, which claims benefit of U.S. provisional applications, Ser. No. 60/644,903, filed Jan. 19, 2005; Ser. No. 60/642,227, filed Jan. 7, 2005; Ser. No. 60/607,963, filed Sep. 8, 2004; and Ser. No. 60/562,480, filed Apr. 15, 2004, which are hereby incorporated herein by reference in their entireties.

FIELD OF THE INVENTION

The present invention relates generally to an imaging system for a vehicle and, more particularly, to an imaging system that may display information to a driver of the vehicle and/or control an accessory in response to images captured by a camera or image capture device.

BACKGROUND OF THE INVENTION

It is known to provide an image capture device at a vehicle for capturing images of the scene occurring exteriorly of the vehicle, such as forwardly or rearwardly or sidewardly of the vehicle. The captured images may be processed by a processing system and the system may control the headlamps of the vehicle or may provide an image display to the driver of the vehicle or may provide other information or signals, depending on the particular application of the imaging system.

SUMMARY OF THE INVENTION

The present invention provides an imaging system for a vehicle that is operable to identify and read traffic control signage as the vehicle travels along a road. The system may provide an information display and/or alert to a driver of the vehicle in response to the images captured by a camera or imaging device of the vehicle. The imaging system of the present invention may also process captured images and control one or more accessories in response to such processing. For example, the imaging system of the present invention may control the headlamps or may adjust or control the direction of the headlamps in response to such image processing.

According to an aspect of the present invention, an imaging system for a vehicle includes an imaging device, a display device and an image processor. The imaging device has a field of view exteriorly and forward of the vehicle in its direction of travel and captures images representative of the exterior scene. The image processor processes the captured images and determines whether the captured image encompasses an image of a traffic control sign. If the image processor determines that the captured image encompasses a traffic control sign of interest, the image processor determines the numerals, characters or other information on the face of the sign. The image processor may control the display device in response to the determined characters or information and in response to a vehicle speed input that is indicative of the speed that the vehicle is traveling. The display device thus may display information to a driver of the vehicle in response to an output of the image processor and/or may generate at least one of a visible, audible or tactile/haptic signal to alert the driver that he or she has entered a different speed zone. Most preferably, the display information and/or alert differentiates and distinguishes from and is characteristic of an allowed increase in driving speed from one zone to another and a decrease in driving speed from one zone to another, whereby the driver is informed as to whether it is allowable to drive faster or is required to drive slower.

Preferably, the imaging device and the associated image processor are located within the interior cabin of the vehicle with a field of view through the vehicle windshield and, most preferably, the image processor is located at an interior rear-view mirror assembly or at a windshield electronic module located at a central upper windshield location. Preferably, the imaging system can be multi-tasking, and thus may be part of or associated with other vehicle accessories or systems or may access or share components or circuitry of other vehicle accessories or systems. For example, the image processor may preferably derive further information from the processed captured images, such as a determination of location, intensity and type of oncoming headlamps or leading taillights being approached by the vehicle, rain or fog or the like present and detected within the forward field of view, a presence of obstacles or objects or vehicles in the forward field of view and/or the like, such as in connection with a headlamp control system, a precipitation sensor, an adaptive cruise control system, a lane departure warning system, a traffic lane control system and/or the like.

For example, the image processor may determine that a speed limit sign is within the captured image by analyzing the size, shape and location of a detected object. The image processor may then determine or recognize the characters or numbers or information on the face of the speed limit sign to determine the speed limit in the area through which the vehicle is traveling. The display device may display information to the driver of the vehicle in response to the determined characters and the vehicle speed. For example, if the vehicle speed is substantially greater than the posted and determined speed limit, the display device may display information to that effect or may provide a warning or alert signal to alert the driver of the excessive speed that the vehicle is traveling.

According to another aspect of the present invention, an imaging system for a vehicle includes an imaging device and an image processor. The imaging device has a field of view exteriorly and forward of the vehicle in its direction of travel. The imaging device is operable to capture images representative of the exterior scene. The image processor is operable to process the captured images in accordance with an algorithm. The algorithm comprises a sign recognition routine and a character recognition routine.

The algorithm may pass to the character recognition routine after the sign recognition routine. The image processor may process the captured image to determine whether the

captured image encompasses an image of a traffic control sign of interest when in the sign recognition routine. The image processor may process the captured image to determine what the characters on the face of the sign represent when in the character recognition routine. The algorithm may proceed to the character recognition routine in response to the image processor determining that the captured image encompasses an image of a traffic control sign of interest.

The imaging system may include at least one of a visible alert, an audible alert and a tactile alert to a driver of the vehicle in response to an output of the image processor. The visible alert may display information indicative of at least one of the vehicle speed, a posted speed limit and a difference between the vehicle speed and the posted speed limit.

The imaging system may be also or otherwise operable to control a headlamp setting or headlamp beam direction of the vehicle in response to detected headlamps or taillights or other objects of interest along the path of travel of the vehicle. The imaging system may detect objects of interest, such as objects that may pose a threat to the vehicle or lane markers or other objects, and may display information regarding the objects or other information to the driver of the vehicle, such as at a video display screen or laser display or heads up display or the like.

Therefore, the present invention provides an imaging system that is operable to detect and recognize and read traffic control signage along the side (and/or above) the road along which the vehicle is traveling. The imaging system may then display information to the driver of the vehicle regarding the detected and recognized signage. The imaging system may provide a warning or alert signal to the driver if an unsafe or unwanted driving condition is encountered, such as when the vehicle is traveling at a speed that is substantially over the speed limit or is approaching a turn at too high a speed or the like.

These and other objects, advantages, purposes and features of the present invention will become apparent upon review of the following specification in conjunction with the drawings.

BRIEF DESCRIPTION OF THE DRAWINGS

FIG. **1** is a side elevation of a portion of a vehicle embodying an imaging system in accordance with the present invention;

FIG. **2** is a block diagram of an imaging system in accordance with the present invention;

FIG. **3** is a sectional view of an interior rearview mirror assembly having a display device in accordance with the present invention;

FIG. **4** is a sectional view of another interior rearview mirror assembly having another display device in accordance with the present invention;

FIG. **5** is a sectional view of an interior rearview mirror assembly incorporating a laser display device in accordance with the present invention; and

FIG. **6** is a sectional view of an accessory module having an imaging device in accordance with the present invention.

DESCRIPTION OF THE PREFERRED EMBODIMENTS

Referring now to the drawings and the illustrative embodiments depicted therein, a vehicle **10** includes an imaging system **12**, which includes an imaging sensor or image capture device or camera **14**, which captures images of a scene occurring exteriorly of the vehicle **10** (FIGS. **1** and **2**). Imaging system **12** includes a control including an image processor **16**, which receives data from imaging device **14**. The image processor **16** processes the captured images or captured image data and may identify traffic control signage (such as stop signs, speed limit signs, exit signs and the like) and may identify the characters, numbers and/or information that is printed or formed or established on the faces of the signs and may generate an output signal in response to the identified characters/numbers/information. The imaging system **12** includes a display or display device **18**, which may be positioned within the vehicle (such as at an interior rearview mirror assembly of the vehicle or at an accessory module (such as located at an upper portion of the windshield) of the vehicle or at an instrument panel of the vehicle or at an overhead console of the vehicle or the like) and which displays information in response to image processor **16** processing the captured images, as discussed below.

The imaging device **14** may comprise an imaging array sensor, such as a CMOS sensor or a CCD sensor or the like, such as described in U.S. Pat. Nos. 5,550,677; 5,670,935; 5,796,094; 6,498,620; 5,877,897; 6,396,397 and 6,313,454, and U.S. patent application Ser. No. 10/421,281, filed Apr. 23, 2003, now U.S. Pat. No. 7,004,606, which are hereby incorporated herein by reference. In a preferred embodiment, the imaging system **12** may include a lens element or optic between the imaging device **14** and the exterior scene. The optic may comprise an asymmetric optic, which focuses a generally central portion of the scene onto the imaging device, while providing classical distortion on the periphery of the scene or field of view.

In the illustrated embodiment, the imaging device **14** is mounted at or in an accessory module or pod **20** and is arranged to have a field of view forward of the vehicle. The imaging device **14** thus may capture images of a forward scene as the vehicle is traveling forwardly along a road or street or highway or the like. Optionally, the imaging device may be positioned elsewhere, such as at or in the interior rearview mirror assembly **22**, or at or in an accessory module or windshield electronics module or the like (as discussed below), without affecting the scope of the present invention.

Display **18** of imaging system **12** may be positioned in the vehicle and may be readily viewable by the driver of the vehicle. For example, display **18** may be positioned in the interior rearview mirror assembly **22** and may be viewable at the reflective element of the mirror assembly or at or around the reflective element or bezel portion, such as at the chin or eyebrow region of the mirror assembly. Optionally, the display device **18** may be at or in or associated with an accessory module or windshield electronics module or the like at or near the interior rearview mirror assembly, such as an accessory module or windshield electronics module of the types described in U.S. patent applications, Ser. No. 10/355,454, filed Jan. 31, 2003, now U.S. Pat. No. 6,824,281; and Ser. No. 10/456,599, filed Jun. 6, 2003, now U.S. Pat. No. 7,004,593, and/or U.S. Pat. Nos. 6,690,268; 6,250,148; 6,341,523; 6,593,565 and 6,326,613, and/or in PCT Application No. PCT/US03/40611, filed Dec. 19, 2003, which are hereby incorporated herein by reference. Optionally, the display device may be at or in an overhead console (such as a console of the types described in PCT Application No. PCT/US03/40611, filed Dec. 19, 2003, which is hereby incorporated herein by reference) or elsewhere in the vehicle, such as in the instrument panel of the vehicle or the like, without affecting the scope of the present invention.

Display or display device **18** may comprise any type of display element or device or screen, without affecting the scope of the present invention. For example, display device **18** may comprise a backlit display, which may be laser-etched

or otherwise formed on or placed on (such as via an appliqué or the like) the surface of the reflective element of the mirror assembly (such as via removing the reflective coating of the reflective element to form a desired port or icon or character and/or such as by utilizing aspects described in U.S. Pat. No. 4,882,565, issued to Gallmeyer, which is hereby incorporated herein by reference) to allow light from corresponding illumination sources or elements to pass through the reflective element to illuminate the appropriate port or icon or character for viewing by the driver or occupant of the vehicle, such as described in U.S. patent applications, Ser. No. 10/456,599, filed Jun. 6, 2003, now U.S. Pat. No. 7,004,593; and/or Ser. No. 11/029,695, filed Jan. 5, 2005, now U.S. Pat. No. 7,253,723, which are hereby incorporated herein by reference. Optionally, the display device may comprise a video screen (such as the types described in PCT Application No. PCT/US03/40611, filed Dec. 19, 2003, and/or U.S. provisional application Ser. No. 60/630,061, filed Nov. 22, 2004, which are hereby incorporated herein by reference), or may comprise a display on demand/transflective type of display or the like at the reflective element of the mirror assembly (where the presence of the display device or element may be substantially masked or not readily viewable unless powered, such as the types described in U.S. Pat. Nos. 6,690,298; 5,668,663 and/or 5,724,187, and/or in U.S. patent applications, Ser. No. 10/054,633, filed Jan. 22, 2002, now U.S. Pat. No. 7,195,381; and/or Ser. No. 10/993,302, filed Nov. 19, 2004, now U.S. Pat. No. 7,338,177, which are all hereby incorporated herein by reference), or may comprise a heads up display that projects the display information for viewing in front of the driver of the vehicle, or may comprise any other type of display (such as the types described in U.S. Pat. Nos. 5,530,240 and/or 6,329,925, which are hereby incorporated herein by reference) or the like, without affecting the scope of the present invention. The display device may include one or more display elements, such as illumination sources, such as vacuum fluorescent (VF) elements, liquid crystal displays (LCDs), light emitting diodes (LEDs), such as inorganic LEDs or organic light emitting diodes (OLEDs), electroluminescent (EL) elements or the like, without affecting the scope of the present invention.

Optionally, the display may comprise a video display screen that is selectively viewable, such as at or near the mirror assembly (such as a slide out display of the types described in PCT Application No. PCT/US03/40611, filed Dec. 19, 2003; and/or U.S. provisional application Ser. No. 60/630,061, filed Nov. 22, 2004, which are hereby incorporated herein by reference) or through the reflective element of the mirror assembly. For example, and with reference to FIG. **3**, a mirror assembly **122** includes a reflective element **130** and a display device or element **118** positioned behind the reflective element **130** and within the mirror housing or casing **132**. The reflective element **130** may comprise a fourth surface electro-optic reflective element assembly, such as a fourth surface electrochromic reflective element assembly, and has a reflective coating or paint layer **134** on the rear or fourth surface **130***a* of the reflective element assembly. Examples of such fourth surface reflective element assemblies are described in U.S. Pat. Nos. 6,690,268; 5,140,455; 5,151,816; 6,178,034; 6,154,306; 6,002,544; 5,567,360; 5,525,264; 5,610,756; 5,406,414; 5,253,109; 5,076,673; 5,073,012; 5,117,346; 5,724,187; 5,668,663; 5,910,854; 5,142,407 and/or 4,712,879, which are hereby incorporated herein by reference. Optionally, the reflective element may comprise a prismatic reflective element with a reflective coating or paint layer on its rear surface. As shown in FIG. **3**, the reflective coating **134** is removed or otherwise not present (such as by masking the reflective element surface during the coating process) at a display region **136**. The mirror assembly **122** includes a movable reflector **138**, such as a small mirror or reflective element or the like, that is selectively positionable at the display region **136** to provide a reflectant element at the display region, so that substantially the entire reflective element **130** reflects to the driver or occupant of the vehicle when the movable reflector **138** is positioned at the display region.

When it is desired to display information to the driver or occupant of the vehicle, movable reflector **138** may be selectively moved, such as by moving the reflector rearward of the rear surface of the reflective element **130** and then to a side of (or above or below) the display region **136**. The display element **118** is positioned generally rearward of the display region **136** so that the display element **118** may be viewable through the display window or region when the movable reflector is removed from the display window or region. Optionally, the display element **118** may move toward the display region and may engage or contact the display region of the reflective element **130** to enhance viewing of the display information through the reflective element. When the display information is no longer desired or needed, the display element may move rearward of the reflective element and the movable reflector may move back to the initial position at the display region.

The display element may be operable to display information relating to a rear vision system of the vehicle, a navigation and/or compass system of the vehicle, a telematics system of the vehicle or any other vehicle system. The movable reflector may be selectively moved and the display element may be selectively activated and/or moved in response to a user input (such as a voice command or manual input at a button or switch or sensor or the like), or may be selectively activated and/or moved automatically, such as in response to a triggering event, such as when the vehicle is shifted into reverse for a backup system or when the vehicle approaches a waypoint for a navigational system (such as a navigational system of the types described in PCT Application No. PCT/US03/40611, filed Dec. 19, 2003; and/or U.S. provisional application Ser. No. 60/611,796, filed Sep. 21, 2004, which are hereby incorporated herein by reference), or other triggering events or the like.

The display element and/or movable reflector may be moved via actuation of an electromagnetic drive motor to move the element/reflector to the appropriate location. Optionally, and particularly for applications where the mirror assembly includes compass circuitry for a compass system of the vehicle, the mirror assembly or system may include a control that may inhibit data sampling by the compass circuitry when the display element and/or movable reflector are moving. For example, the control or system may limit or inhibit data sampling by the compass circuitry when the display is activated or deactivated and/the movable reflector is moving (or when a slide out display is moving (such as a slide out display of the types described in PCT Application No. PCT/US03/40611, filed Dec. 19, 2003, and/or U.S. provisional application Ser. No. 60/630,061, filed Nov. 22, 2004, which are hereby incorporated herein by reference). The control or system thus may interact with the compass or compass circuitry or control to reduce or limit or substantially preclude magnetic interference of the compass system during operation of the drive motor (such as an electromagnetic motor) of the movable reflector or slide out display or the like, in order to limit or substantially preclude the capturing of corrupting data that may occur during operation of the electromagnetic motor of the display or movable reflector. The control or

system may be operable to limit or inhibit operation of or data collection by the compass circuitry or system during operation of other electromagnetic components of the mirror assembly or accessory module or the like.

Optionally, the display may comprise a steerable laser display positioned within an accessory module or with the interior rearview mirror assembly. For example, and with reference to FIG. **4**, an interior rearview mirror assembly **222** includes a steerable laser display device **218**, such as a controllable or programmable display device that is operable to project illumination in a controlled or programmed manner. The laser display device **218** may project illumination in a scanning movement, such as at about 30 frames per second, to project an image as the laser scans through multiple rows and/or columns at an image viewing area or display region. In the illustrated embodiment, the scanning display device **218** projects illumination onto an angled reflector **238**, which reflects or directs the illumination through a display region **236** of the reflective element **230**. The reflective element **230** may comprise a transflective electro-optic reflective element assembly, such that the display information may provide a display on demand display (such as the types disclosed in U.S. Pat. Nos. 6,690,268; 5,668,663 and/or 5,724,187, and/or in U.S. patent application Ser. No. 10/054,633, filed Jan. 22, 2002, now U.S. Pat. No. 7,195,381; PCT Application No. PCT/US03/29776, filed Sep. 9, 2003; and/or PCT Application No. PCT/US03/40611, filed Dec. 19, 2003, which are all hereby incorporated herein by reference) that is projectable through the reflective element and viewable by the driver or occupant of the vehicle when the display element is activated, while the reflective element **230** provides sufficient reflectance in the display region when the display element is deactivated.

The laser scanning display element of the present invention thus provides a programmable display that may display text or graphics or indicia or the like. The display element provides information to the driver or occupant of the vehicle as a dynamic display. The display element also provides enhanced brightness over some known or conventional display elements and may be implemented at a lower cost than other known or conventional display elements or devices, such as multi-pixel display screens and the like.

Optionally, a variety of display types or screens can be utilized in conjunction with an interior rearview mirror assembly or windshield electronics module/accessory module of the present invention. For example, any of the liquid crystal type display or video screens (such as the types disclosed in PCT Application No. PCT/US03/40611, filed Dec. 19, 2003, and/or U.S. provisional application Ser. No. 60/630,061, filed Nov. 22, 2004, which are hereby incorporated herein by reference) can be utilized. Also, a microdisplay (such as is available from MicroVision Inc. of Bothell, Wash.), in which a single scanner is used to direct multiple light beams simultaneously into separate zones of an image so as to deliver a bright, high resolution, image over a wide field of view, can be used. Such a microdisplay may utilize conventional surface emitting or other types of light emitting diodes (LEDs) as light sources to provide an economical display with sharp resolution and high image brightness. For example, multiple red, green and blue LEDs or red, blue and green laser diodes can be used to write several million red, green, and blue spots that integrate to form a single high-fidelity image in a mega pixel display image. Such scanning display technologies can utilize a biaxial microelectromechanical scanner (MEMS) and other display/mechanical and electronic devices, such as are disclosed in U.S. Pat. Nos. 6,714,331; 6,795,221 and 6,762,867, which are hereby incorporated herein by reference, and can provide increased spatial resolution. Such displays can deliver an image with a full 30-degree horizontal field of view or more. Such a microdisplay/MEMS device can, for example, be placed in the mirror housing behind the mirror reflective element in an interior (or exterior) mirror assembly such that the image is projected onto the rear of the mirror reflective element, such as is disclosed in U.S. patent application Ser. No. 10/225,851, filed Aug. 22, 2002, now U.S. Pat. No. 6,847,487, which is hereby incorporated herein by reference.

If the mirror reflector of the mirror element is of the transflective (substantially reflective and at least partially transmitting to light) type, the driver or other occupant in the interior cabin of the vehicle can view the image (being back-projected onto the rear of the mirror reflective element) by viewing the mirror reflective element. This is because the front surface of the reflective element will typically reflect about 4 percent of the light incident on the reflective element toward the driver of the vehicle. Thus, if the display illumination (projected through the reflective element from behind the reflective element and within the mirror casing) does not dominate or distinguish over the reflectance off of the front surface of the mirror reflective element, the display illumination and information may appear washed out due to the reflected image that is reflecting off of the front surface of the reflective element. Such washout may be particularly noticeable during high ambient lighting or daytime lighting conditions. Because back-projected microdisplays can have a very high image brightness (due to use of very high brightness LEDs or lasers as illuminators), image wash-out during driving under high ambient lighting conditions (such as on a sunny day) is reduced using such scanning image microdisplay technology compared to use, for example, of TFT LCD displays.

Also, such MEMS technology can be used in a heads-up-display (HUD) system, such as the MicroHUD™ head-up display system available from MicroVision Inc. of Bothell, Wash. (and such as described in U.S. patent application Ser. No. 11/029,695, filed Jan. 5, 2005, now U.S. Pat. No. 7,253,723, which is hereby incorporated herein by reference). This provides a compact heads-up display capable of meeting specific size and performance specifications. For example, MicroVision's MicroHUD™ combines a MEMS-based micro display with an optical package of lenses and mirrors to achieve a compact high-performance HUD module that reflects a virtual image off the windscreen that appears to the driver to be close to the front of the car. This laser-scanning display can outperform many miniature flat panel LCD display screens because it can be clearly viewed in the brightest conditions and also dimmed to the very low brightness levels required for safe night-time driving.

The high-resolution MicroHUD™ display may be completely reconfigurable, enabling virtually any content to be displayed, including video or animated icons and graphics. Advantageously, such a MicroHUD™ display unit may be included at or within an interior rearview mirror assembly or a windshield electronics module/accessory module so as to project its image therefrom onto the inner surface of the windshield. This unique packaging of a HUD or projection image displayer into an interior rearview mirror assembly or a windshield electronics module/accessory module has advantages over conventional placement of such HUD projectors into the dashboard of the vehicle. These advantages include that the HUD image projector need not find space in an already crowded dashboard (where, for example, a center information cluster may want space or where HVAC ducts/components may run). Also, incorporation of the HUD pro-

jector in the likes of the mounting portion of the interior mirror assembly or into a windshield electronics module/accessory module can allow a HUD display to be provided more readily as an optional accessory for the vehicle or as a dealership option or aftermarket device. A variety of images (such as, for example, iconistic or graphical or video or textural or alphanumerical or numerical or the like) can be displayed, such as information from a side object/blind spot monitoring system, such as the types described in U.S. Pat. No. 5,929,786, and/or U.S. patent applications, Ser. No. 10/427,051, filed Apr. 30, 2003, now U.S. Pat. No. 7,038,577; and/or Ser. No. 10/209,173, filed Jul. 31, 2002, now U.S. Pat. No. 6,882,287, and/or U.S. provisional application Ser. No. 60/638,687, filed Dec. 23, 2004, which are hereby incorporated herein by reference.

Also, a full video image captured by the likes of a reversing camera or a forward facing night vision camera or a sidelane-monitoring camera can be displayed on/via the vehicle windshield (or elsewhere) by the likes of a MicroHUD™ device and, conceptually, thus replacing the exterior mirrors with cameras. For example, a driver sidelane video image and a passenger sidelane video image, both preferably with graphic overlays thereon, can be displayed at respective sides of the vehicle windshield via a MEMS-based display system (such as via a MicroHUD™ HUD display device) and with the image visible to the driver by viewing the vehicle windshield (such as via an optical image combiner created on the inner glass surface of the windshield and/or onto the polymeric laminating interlayer (typically a sheet of polyvinyl butyral or of silicone or the like) utilized in the laminate windshield).

Optionally, a laser emitter or laser diode or the like may be positioned within the mirror casing and behind the reflective element, and may be used to emit radiation onto a reflector (such as a microelectromechanical scanner (MEMS)) within the mirror casing that reflects the radiation toward and through the mirror reflective element for viewing by a driver of the vehicle (such as by utilizing aspects described in U.S. patent application Ser. No. 10/225,851, filed Aug. 22, 2002, now U.S. Pat. No. 6,847,487; and/or U.S. provisional applications, Ser. No. 60/607,963, filed Sep. 8, 2004; Ser. No. 60/642,227, filed Jan. 7, 2005; and Ser. No. 60/644,903, filed Jan. 19, 2005, which are all hereby incorporated herein by reference).

Such a laser scanning display device may provide enhanced display characteristics for enhanced viewing of the display at the reflective element by the driver of the vehicle. Typically, in order to use a laser to back light a display area (such as an area of about two cm square or thereabouts), the laser beam may be projected through an optic that broadens the beam to the desired size, whereby the intensity of the beam is reduced. An advantage of such scanning display technologies is the intensity of the display delivered, and thus its ability to be seen even under high ambient driving conditions (such as a sunny day). For example, should a standard backlit TFT LCD display be placed behind a transflective mirror element in the likes of an interior rearview mirror assembly, the front or first surface reflection off the front glass surface (typically around 4 percent of the light incident thereon) often far exceeds the intensity of the light transmitted through the transflective mirror reflective element used. Such transflective mirrors also reflect coincident with the reflection off the front surface, and thus further exasperate the washout of the display image being transmitted/emitted through the reflective element. Even if the reflective coating is locally fully removed to create a light transmitting window, reflectivity off the front glass surface often causes display washout and inability to appropriately read what is being viewed at the display. This is particularly problematic for video display (such as for the likes of a rear backup event or side lane maneuver event or the like).

Thus, one advantage of use of such a scanning display technology (such as described in further detail below) is that the full intensity of the laser is used, but by using the movable mirror/reflector of the microelectromechanical scanner (MEMS), the narrow point-like, super high intensity beam rapidly moves across the display image dimension at a rate that is faster than the eye/brain can register, such that the eye/brain perceives a continuous (or substantially continuous) super bright image. Thus, using the concepts of the present invention as described below, a full video image can effectively be projected through or on a surface of the rearview mirror reflective element in a manner not unlike what can be seen during outdoor laser displays or the like (such as when images and video is laser written on the sides of buildings or clouds or the like). Also, multiple lasers of the same color can be focused so that their beams coincide at roughly the same point on the MEMS reflector so that the intensity of any one image element as written is correspondingly enhanced.

For example, and with reference to FIG. **5**, an interior rearview mirror assembly **310** may be pivotally or adjustably mounted to an interior portion of a vehicle, such as via a double ball mounting or bracket assembly **312**. For example, the bracket assembly **312** may include a mirror mount **312***a* that is mountable to a mounting button **313** adhered or bonded to an interior surface **311***a* of a vehicle windshield **311**. The bracket assembly **312** may also include a mounting arm **312***b* that is pivotally attached to the mirror mount **312***a* at a first pivot joint **312***c* and that is pivotally attached to the mirror casing or mirror head at a second pivot joint **312***d*. Other means for adjustably mounting the mirror head to an interior portion of the vehicle may be implemented without affecting the scope of the present invention.

Mirror assembly **310** includes an electro-optic or electrochromic reflective element **314** supported at or in a housing or casing **318**. The mirror assembly **310** includes a scanning display device **326** that is operable to display information (such as text, alphanumeric characters, icons, images, video images, or other indicia or information or the like) at the reflective element **314** for viewing by a driver of the vehicle. Advantageously, display device **326** is housed behind (to the rear of) the mirror reflective element and thus is within mirror casing **318**. Thus, the automaker may acquire and install mirror assembly **310** (with the scanning display capability included) across a variety of vehicle models and lines. Reflective element **314** includes a front substrate **320** and a rear substrate **322** and an electro-optic medium **324** disposed therebetween with a seal **325** encompassing the electro-optic medium, as is known in the electro-optic mirror arts. The front substrate **320** includes a transparent conductive coating or layer **321** at its rear surface (commonly referred to as the second surface of the reflective element), while the rear substrate **322** includes a conductive coating **323** at its front or forward surface (commonly referred to as the third surface of the reflective element).

The reflective element may comprise a transflective reflective element that allows light from the display device **326** to pass therethrough for viewing by the driver of the vehicle, such as by utilizing principles described in U.S. Pat. Nos. 6,690,268; 5,668,663 and/or 5,724,187, and/or in U.S. patent applications, Ser. No. 10/054,633, filed Jan. 22, 2002, now U.S. Pat. No. 7,195,381; and/or Ser. No. 11/021,065, filed Dec. 23, 2004, now U.S. Pat. No. 7,255,451; and/or PCT Application No. PCT/US03/29776, filed Sep. 9, 2003; and/or

PCT Application No. PCT/US03/35381, filed Nov. 5, 2003; and/or U.S. provisional applications, Ser. No. 60/630,061, filed Nov. 22, 2004; Ser. No. 60/629,926, filed Nov. 22, 2004; Ser. No. 60/531,838, filed Dec. 23, 2003; Ser. No. 60/553,842, filed Mar. 17, 2004; Ser. No. 60/563,342, filed Apr. 19, 2004; Ser. No. 60/644,903, filed Jan. 19, 2005; Ser. No. 60/667,049, filed Mar. 31, 2005; Ser. No. 60/653,787, filed Feb. 17, 2005; Ser. No. 60/642,227, filed Jan. 7, 2005; Ser. No. 60/638,250, filed Dec. 21, 2004; Ser. No. 60/624,091, filed Nov. 1, 2004; and Ser. No. 60/609,642, filed Sep. 14, 2004, and/or PCT Application No. PCT/US03/40611, filed Dec. 19, 2003, which are all hereby incorporated herein by reference. Optionally, use of an elemental semiconductor mirror, such as a silicon metal mirror, such as disclosed in U.S. Pat. Nos. 6,286,965; 6,196,688; 5,535,056; 5,751,489 and 6,065,840, and/or in U.S. patent application Ser. No. 10/993,302, filed Nov. 19, 2004, now U.S. Pat. No. 7,338,177, which are all hereby incorporated herein by reference, can be advantageous because such elemental semiconductor mirrors (such as can be formed by depositing a thin film of silicon) can be greater than 50% reflecting in the photopic (SAE J964a measured), while being also substantially transmitting of light (up to 20% or even more). Such silicon mirrors also have the advantage of being able to be deposited onto a flat glass substrate and to be bent into a curved (such as a convex or aspheric) curvature, which is also advantageous since many passenger-side mirrors are bent or curved.

Display device **326** comprises a scanning beam display system that includes a plurality of laser light sources or diodes **328***a*, **328***b*, **328***c*, a controller **330** and a microelectromechanical scanner (MEMS) **332**. The display device **326** is contained within the interior casing **318** of mirror assembly **310**. The controller **330** receives and/or generates image signals that control the intensity, mix and on-time of the light output by the three laser diodes **328***a*, **328***b*, **328***c*. The controller **330** also establishes the coordinates for the movable elements of the MEMS assembly **332** so that the individual picture elements (pixels) of the displayed image (as displayed at the display area or region **333** at the reflective element **314**) are created for view by the driver or other vehicular occupant. For monochrome (one-color) systems, only one laser diode source may be used. Optionally, for full-color displays, three light sources (e.g., red, green and blue) are modulated and merged to produce an image element of the appropriate color. Under the control of controller **330**, a horizontal and vertical scanner or a single micro-electromechanical scanner (MEMS) **332** directs the light beams received from laser diodes **328***a*, **328***b*, **328***c*, and projects them onto the rear of (and/or into the body of) mirror reflective element **314** to create the image viewed. Optics (not shown) may be included as desired to achieve the desired spatial and resolution dimensions displayed.

For example, mirrors and/or lens elements or other refractive or diffractive and/or reflective optical elements can be used to project the rapidly scanned beam or beams of light onto the rear of the mirror element (and/or into the body thereof) to create the image seen. Such a scanned-beam automotive mirror display can deliver very high resolution, very high intensity images, with the resolution being limited principally by diffraction and optical aberrations in the light sources used within the mirror casing. Optionally, the rear surface **322***a* of the rear substrate **322** of the reflective element **314** may include a diffuser coating or layer/combiner **334** or other diffuser means or the like, and the diffuser coating or layer or area may be over substantially the entire rear surface **322***a* or may be over only that portion of the rear or fourth surface rastered by light reflected off the MEMS **332** that creates the display image. Also, and optionally, diffuser coatings and/or layers/combiners may be included within the body of the mirror reflective element, such as on the third surface of the electro-optic reflective element.

Although illustrated as a transflective mirror element, the reflective coating may be locally removed from a non-transflective mirror element to create a window for viewing the display thereat or therethrough. The window region may include a diffuse coating and/or layer/combiner or the like, such as on the rear surface of the reflective element (such as if the reflective element is an electro-optic or electrochromic reflective element or a non-electro-optic or prismatic reflective element) or on the third surface (such as if the reflective element is an electro-optic or electrochromic reflective element), if desired.

The laser diodes may be rastered or scanned at a desired rate over the MEMS reflector so that a generally continuous image is created by reflection off the MEMS and onto/into and as viewed through the reflective element. In the illustrated embodiment, the laser diodes are positioned to project or emit or radiate their laser beams so that they are incident on the electromechanically moved portion of the MEMS and whereby the laser beams are reflected toward the reflective element by the MEMS reflector.

The MEMS **332** may be positioned within the casing and angled or oriented to reflect illumination or radiation from the laser diodes **328***a*, **328***b*, **328***c* toward the rear surface of the reflective element **314**. The reflective surface of the MEMS **332** may be created on a chip, and may be adjusted to provide the desired projection or reflection angle through the reflective element **314** for viewing by a driver of the vehicle. The MEMS reflector may be electrically adjusted and/or electromechanically adjusted to provide the appropriate or desired information or icon or image for the laser beams to project onto and through the reflective element. The laser diodes **328***a*, **328***b*, **328***c* may comprise any laser diodes, such as, for example, laser diodes of the types commercially available from Cree Research Inc. of Durham, N.C., which offers different color laser diodes, such as visible red laser diodes and/or blue laser diodes, such as gallium nitride based blue lasers, and other colors as may be desired, such as, for example, green.

Because of the high intensity illumination provided by such laser diodes, the intensity at the display region of the reflective element will be sufficient to dominate the reflection of the rearward scene off of the front surface of the front substrate of the reflective element, and thus will not appear washed out, even during high ambient lighting conditions, such as on a sunny day or the like. Optionally, the intensity of the laser diodes may be adjusted, such as via manual adjustment and/or via automatic adjustment, such as in response to the ambient light levels in the cabin of the vehicle or in the vicinity of the display. The display information may be associated with any accessory or component or feature of the interior rearview mirror assembly or of the vehicle, such as point-to-point navigational instructions, status information for various functions, such as passenger side airbag status, tire pressure status and/or the like, or compass heading or temperature information or other information or the like.

Also, a video display and/or other information display may be located at the interior mirror assembly (or at a windshield electronics module/accessory module) that utilizes a Micro-Electro-Mechanical-Systems (MEMS) structure combined with thin film optics, such as is available Iridigm of San Francisco, Calif. under the tradename iMoD™ technology. This display technology (such as is described in U.S. Pat. Nos. 6,794,119; 6,741,377; 6,710,908; 6,680,792; 6,674,562;

6,650,455; 6,589,625; 6,574,033; 5,986,796 and 5,835,255, which are hereby incorporated herein by reference) is designed to deliver lower power consumption and excellent display image quality, and can withstand extreme temperatures and can be viewed in substantially any environment, including bright sunlight.

Although shown and described as being incorporated into an electro-optic or electrochromic interior rearview mirror assembly, it is envisioned that the scanning beam display system may be incorporated into a prismatic interior rearview mirror assembly or a transflective prismatic rearview mirror assembly (such as by utilizing principles described in PCT Application No. PCT/US03/29776, filed Sep. 19, 2003; U.S. patent applications, Ser. No. 11/021,065, filed Dec. 23, 2004, now U.S. Pat. No. 7,255,451; and/or Ser. No. 10/993,302, filed Nov. 19, 2004, now U.S. Pat. No. 7,338,177, which are all hereby incorporated herein by reference). Optionally, the laser scanning beam display system may be incorporated into an exterior rearview mirror assembly without affecting the scope of the present invention. For exterior rearview mirror applications, the display system may function to display blind spot detection icons or information, or turn signals or security lights or the like, at the reflective element of the exterior rearview mirror assembly of the vehicle. For example, a non-electro-optic/fixed reflectivity reflector may use an elemental semiconductor mirror, such as a silicon metal mirror, such as disclosed in U.S. Pat. Nos. 6,286,965; 6,196,688; 5,535,056; 5,751,489 and 6,065,840, and/or in U.S. patent application Ser. No. 10/993,302, filed Nov. 19, 2004, now U.S. Pat. No. 7,338,177, which are all hereby incorporated herein by reference, can be advantageous because such elemental semiconductor mirrors (such as can be formed by depositing a thin film of silicon) can be greater than 50% reflecting in the photopic (SAE J964a measured), while being also substantially transmitting of light (up to 20% or even more). Such silicon mirrors also have the advantage of being able to be deposited onto a flat glass substrate and to be bent into a curved (such as a convex or aspheric) curvature, which is also advantageous since many passenger-side mirrors are bent or curved.

Optionally, the display may comprise a laser emitter or laser diode or the like, which may be positioned within the mirror casing and behind the reflective element, and may be used to emit radiation onto a reflector (such as a microelectromechanical scanner (MEMS)) within the mirror casing that reflects the radiation toward and through the mirror reflective element for viewing by a driver of the vehicle (such as by utilizing aspects described in U.S. patent application Ser. No. 10/225,851, filed Aug. 22, 2002, now U.S. Pat. No. 6,847,487; and/or U.S. provisional applications, Ser. No. 60/644,903, filed Jan. 19, 2005; Ser. No. 60/642,227, filed Jan. 7, 2005; and/or Ser. No. 60/607,963, filed Sep. 8, 2004, which are hereby incorporated herein by reference).

The light emitting device, such as a laser diode or light emitting diode (LED) or the like (such as described in U.S. provisional applications, Ser. No. 60/644,903, filed Jan. 19, 2005; Ser. No. 60/642,227, filed Jan. 7, 2005; and/or Ser. No. 60/607,963, filed Sep. 8, 2004, which are hereby incorporated herein by reference), of the display may be controlled by a controller, which may modulate the intensity or on/off characteristic of the emitted light while the light emitting device or laser is rastered (or moved rapidly back and forth in generally horizontal or vertical scanning lines over a display area), in order to create the desired display via the points where the light emitting device is intensified or activated. Because the laser diode may be rastered at a high rate over substantially the entire display area but only activated/intensified at appropriate locations to form the desired display, the narrow point like, super high intensity beam (that is activated/intensified/modulated as the laser diode is rapidly moved across the display image dimension at a rate that is faster than the eye/brain can register) is perceived by the human eye/brain as a continuous (or substantially continuous) super bright image, even though only one light "dot" or beam may actually be present at a time at the display. A person viewing the display thus would see the display as the desired form or character and substantially constantly and brightly illuminated by the rastered and modulated laser diode.

Optionally, the light emitting device may be substantially constantly activated and directed/rastered toward a display window, such as a liquid crystal display (LCD) or the like, with a window established in the desired form, so that light emitted by the light emitting device (such as a laser diode, a light emitting diode (LED) or an organic light emitting diode (OLED) or the like) projects or shines through the display window/element, such that the display character or icon or information or video or the like is viewable at the reflective element by the driver of the vehicle. The display window may comprise a substantially transparent or translucent shape or character or icon or the like, with a darkened or substantially opaque area surrounding the window, such that light emitted by the light emitting device passes through or transmits through the window, but is substantially blocked or attenuated by the surrounding opaque area of the display. The LCD display may be operable to adjust the window and opaque regions to adjust or modulate or change or control the information being displayed by the light passing through the display. For applications where the light emitting device may be rastered at a high rate over substantially the entire display area (such as over the LCD), and with the illumination beam (such as the narrow point like, super high intensity beam of a laser emitting device) rapidly moving across the display image dimension at a rate that is faster than the eye/brain can register, the eye/brain perceives a continuous (or substantially continuous) bright image, even though only one light "dot" or beam may be present at a time through the display window. The light emitting device thus may be constantly or substantially constantly activated/energized, with the display being formed/created by the window through which the light passes as the light beam is rastered or scanned over the display device. A person viewing the display thus would see the display as the character of the display window as substantially constantly and brightly illuminated by the rastered laser diode or other light emitting device, such as an LED or OLED or the like.

Note that is desirable, and in many cases preferable, that the laser light source be only enabled when the MEMS unit is functioning and causing a rastering or the like of the reflected laser beam. This is to limit or substantially preclude or prevent the possibility of the laser beam being stationary for any prolonged period with a concomitant possibility of eye damage to viewer in the vehicle. Thus, the circuitry/software controlling activation/illumination of the laser light source can be tied to the circuitry/software controlling activation/movement of the movable reflector of the MEMS unit, such that should the system fail and the MEMS unit not move or cease rastering, then the laser source is extinguished/turned off so that danger to a viewer from laser eye burn or the like is obviated.

Optionally, a projected information display and/or virtual human machine interface (HMI) may be created at a surface of an interior mirror assembly or a windshield electronics module/accessory module utilizing a virtual data entry device system, such as is disclosed in U.S. Pat. Pub. No.

20020075240, published Jun. 20, 2002, which is hereby incorporated herein by reference. Thus, an optically generated image of a key-entry tablet or an input menu or user-actuation button/input or an icon or an informational message or the like can be projected, for example, onto a surface of the interior rearview mirror or elsewhere within the cabin of the vehicle. The projected image may include at least one input zone/user interface zone that is actuatable by an action performed thereon or thereat by a user. The system includes a sensor operative to sense the action performed on or at the at least one input zone, and to generate signals in response to the detected action. A control or processor in communication with the sensor is operable to process the signals for performing an operation associated with the at least one input zone.

For example, a template of the desired interface (such as a keyboard or input options or the like) may be projected onto an interface surface (such as the reflective element of the interior mirror assembly). The template is produced by illuminating an optical element (such as a holographic optical element) with a laser diode (such as a red laser diode or the like). Because the template functions only as a reference for the user and is not involved in the detection process, the template may optionally be printed at a desired surface, such as at a portion of the reflective element or casing of the mirror assembly (or at a casing or element of a windshield electronics module or accessory module or the like).

An infrared plane of light may be generated at and slightly spaced from and parallel to the interface surface. The light may be substantially invisible to the user and is positioned just a few millimeters away from the interface surface (such as along the first surface of the reflective element and a few millimeters toward the driver or toward the rear of the vehicle from the first surface of the reflective element). Accordingly, when a user touches a portion of the projected interface at the interface surface (for example, the first surface of the reflective element of the interior mirror assembly), light is reflected from the plane in the vicinity of the respective input or key that was "touched" and directed toward the sensor module.

The reflected light from the user interaction with the interface surface is received by or imaged onto an imaging array sensor, such as a CMOS image sensor or the like, in a sensor module. The reflected light may pass through an infrared filter before being imaged onto the CMOS sensor. The sensor control or processor or chip then may conduct a real-time determination of the location of the reflected light, and may be operable to track multiple reflection events substantially simultaneously, and can thus support both multiple inputs/keystrokes and overlapping cursor control inputs and the like. The micro-controller (which may be positioned in the sensor module) receives the positional information corresponding to the light flashes from the sensor control or processor, and interprets the events and communicates them through an appropriate interface to the appropriate external device or devices.

The projected interface and sensor system thus may provide a keypad or input interface at the reflective element for actuation/use by the driver or occupant of the vehicle. The keypad or input interface may be projected onto or at the reflective element only when it is desired to be used, such that the reflective element is substantially unaffected by the incorporation of the interface and sensor system at the interior rearview mirror assembly. The sensor may detect the input action performed/selected by the user and the control may then control or activate/deactivate or modulate or adjust the appropriate accessory or system or device of the vehicle.

The information or input interface that is projected may provide various inputs/actions, such as, for example, inputs for a video display of the vehicle (such as disclosed in U.S. Pat. Nos. 5,760,962 and/or 5,877,897; and/or PCT Application No. PCT/US03/40611, filed Dec. 19, 2003, and/or U.S. provisional applications, Ser. No. 60/630,061, filed Nov. 22, 2004; Ser. No. 60/628,709, filed Nov. 17, 2004; Ser. No. 60/614,644, filed Sep. 30, 2004; and/or Ser. No. 60/618,686, filed Oct. 14, 2004, which are hereby incorporated herein by reference), a communications system of the vehicle (such as disclosed in U.S. Pat. Nos. 6,717,524; 6,650,233; 6,243,003; 6,278,377 and/or 6,420,975, and/or PCT Application No. PCT/US03/30877, filed Oct. 1, 2003, which are hereby incorporated herein by reference), a navigational system of the vehicle (such as the types described in U.S. Pat. No. 6,477,464, and U.S. patent applications, Ser. No. 10/456,599, filed Jun. 6, 2003, now U.S. Pat. No. 7,004,593; Ser. No. 10/287,178, filed Nov. 4, 2002, now U.S. Pat. No. 6,678,614; Ser. No. 10/645,762, filed Aug. 20, 2003, now U.S. Pat. No. 7,167,796; and Ser. No. 10/422,378, filed Apr. 24, 2003, now U.S. Pat. No. 6,946,978; and/or PCT Application No. PCT/US03/40611, filed Dec. 19, 2003, which are hereby incorporated herein by reference), light sources (such as map reading lights or one or more other lights or illumination sources, such as disclosed in U.S. Pat. Nos. 6,690,268; 5,938,321; 5,813,745; 5,820,245; 5,673,994; 5,649,756; 5,178,448; 5,671,996; 4,646,210; 4,733,336; 4,807,096; 6,042,253 and/or 5,669,698, and/or U.S. patent application Ser. No. 10/054,633, filed Jan. 22, 2002, now U.S. Pat. No. 7,195,381, which are hereby incorporated herein by reference) and/or the like. Optionally, different interfaces may be provided for different accessories or devices or functions, whereby the appropriate interface for a particular accessory or device or function may be selected by the user, and the desired particular function of that accessory or device may then be selected and activated or deactivated or controlled by "touching" the appropriate location at the surface (such as the first surface of the reflective element) upon which the interface keypad or input is projected.

Other types of displays or display elements or devices and controls for such displays or display elements or devices may be implemented with the imaging system of the present invention, without affecting the scope of the present invention.

The imaging system of the present invention may be utilized to identify particular traffic control signs or signage by their spectral signature as well as their geometric organization. For example, red octagons may be identified as stop signs, yellow triangles as caution signs, and the like, while black characters on a rectangular white background may be identified as a speed limit sign (in certain zones or regions or countries). These capabilities are a result of the present invention providing a significant reduction in the amount of data to be processed because the image forward of the vehicle is captured in a manner which preselects data. Preselection of data is accomplished by configuring the imaging device or sensor array, including the optics thereof, to consider the spatial, as well as the spectral, characteristics of light sources and objects in the captured images, such as via utilization of principles described in U.S. Pat. No. 5,796,094, which is hereby incorporated herein by reference.

More particularly, image processor **16** receives an input signal generated by imaging device **14** and interrogates or processes the imaging device output to detect traffic control signage in the captured image of the forward scene. The image processor **16** may identify what type of sign is in the captured image based on the geometrical shape of the sign, the size of the sign and the location of the sign relative to the vehicle or road. For example, the image processor may process the image to determine the location of the detected object

or sign relative to the field of view of the imaging device or camera and, thus, relative to the vehicle and to the side of the road where such a sign is expected to be found (typically at the side of the vehicle that is opposite to the driver's side of the vehicle). The imaging processor may determine the shape, size, color and/or location of the detected sign or object via any suitable sign recognition and sign information delineation/discrimination algorithm/software utilized by the imaging system. Such software or algorithm may incorporate any suitable processing means, such as by utilizing aspects described in U.S. Pat. Nos. 5,550,677; 5,670,935; 5,796,094; 6,498,620; 5,877,897; 6,396,397; 6,353,392 and 6,313,454, and/or U.S. patent application Ser. No. 10/427,051, filed Apr. 30, 2003, now U.S. Pat. No. 7,038,577, which are hereby incorporated herein by reference. For example, the image processor may process the image via an edge detection algorithm or the like, such as described in U.S. Pat. Nos. 6,353,392 and 6,313,454, and/or U.S. patent application Ser. No. 10/427,051, filed Apr. 30, 2003, now U.S. Pat. No. 7,038,577, which are hereby incorporated herein by reference.

In a preferred embodiment, the imaging device comprises an imaging array sensor that is responsive to light and that includes colored filters or a filter array at or over the pixels of the sensor, such that the pixels are spectrally responsive to different colors of light, such as described in U.S. Pat. Nos. 5,550,677; 5,670,935; 5,796,094; 6,498,620; 5,877,897; 6,396,397 and 6,313,454, which are hereby incorporated herein by reference. The filters or filter array may be selected to provide enhanced recognition of colors within a selected spectral band or bands of light. The imaging device and the imaging system thus may have enhanced recognition of certain colors that may be expected to be used on the signs or signage of interest (or may have enhanced rejection of certain spectral bands that may not be used on signage of interest).

Such traffic control signage, such as speed limit signs, exit signs, warning signs, stop signs, yield signs and/or the like, is typically regulated and various types of these signs must have certain specified, standard geometric shapes (such as a triangle for a yield sign, an octagon for a stop sign and the like), and must be at a particular height and at a particular location at or distance from the side of the road, and must have a specific type/color of lettering on a specific colored background (for example, a speed limit sign is typically a predefined shape, such as rectangular or circular, and has alphanumeric characters or letters and/or numbers that are a contrast color to a background color, such as black letters/numbers on a white background, while an exit sign typically has a different shape and/or contrast colors, such as white lettering on a green background). The imaging device is arranged at the vehicle, preferably in the interior cabin and viewing through the windshield (and thus protected from the outdoor elements, such as rain, snow, etc.), with a field of view that encompasses the expected locations of such signage along the side of roads and highways and the image processor may process the captured image to determine if the captured images encompass an object or sign that is at the expected location and that has the expected size, color and/or shape or the like. Therefore, the imaging processor **16** may readily determine what type of sign is detected by its geometric shape, size, color, text/characters and its location relative to the imaging device and the vehicle.

Preferably, the image processing algorithm or software includes a sign recognition stage or step or portion or process or routine that processes the image to determine whether the detected sign or object is of interest and, if so, what type of sign is detected. Once the sign recognition stage is satisfied, the image processing algorithm or software proceeds or passes to a character recognition stage or step or portion or process or routine, where the image is processed further to determine or recognize the characters (such as alphanumeric characters, letters, numbers or icons or indicia or the like) printed or formed or established on the face of the sign, in order to determine the information conveyed by the characters or icons or indicia on the face of the sign. The processor involved thus may only be busied with the character recognition stage once the preceding sign recognition stage has recognized and determined that a speed limit sign (or other sign or signage of interest) within the field of view. The algorithm processed by the image processor may include false signal and/or error reduction routines and protection, whereby instances of errant or unintended/false readings of items or objects other than genuine signage are reduced or suppressed.

Once the type of sign is determined, the imaging system may process the characters (which may be alphanumeric characters or numbers or letters or icons or the like) printed or formed or established on the sign, and no further processing of the sign's size or shape or color or the like need be conducted. The imaging system thus may process the images only enough to determine the type of sign and to determine the characters or information on the face of the sign if necessary, such that reduced processing may be achieved in certain circumstances where the sign type is readily identifiable. For example, a stop sign may be readily identified by its shape and color, such that no further processing may be required to determine the sign type or the characters or information on the face of the sign.

It is further envisioned that the detected color of the characters and/or background may be compared to the regulation or specified sign colors for daytime and/or nighttime lighting conditions. For example, if the vehicle is traveling during high ambient light conditions (which may be determined by processing the output of the imaging device or via a separate ambient light sensor or the like), such as during the daytime, the imaging system may determine the type of sign detected in response to matching the detected sign color to the specified or regulated colors for the sign during daytime lighting conditions, while if the vehicle is traveling during low ambient light conditions, such as below approximately 200 lux or thereabouts, such as during nighttime, the imaging system may determine the type of sign detected by matching the detected sign color to the specified or regulated colors for the sign under headlamp or auxiliary lighting conditions such as typically occur at nighttime.

In different countries or regions, and even along different types of roads or highways, the signage regulations may be different, and the imaging processor may be adjusted accordingly to adapt to the different regulations. It is further envisioned that the imaging system may be automatically adjusted or adapted to the sign regulations in effect at the current location of the vehicle. The current location of the vehicle may be determined via a vehicular navigational system or global positioning system (GPS) or the like, such as the types described in U.S. Pat. Nos. 6,477,464; 5,924,212; 4,862,594; 4,937,945; 5,131,154; 5,255,442 and/or 5,632,092, and/or U.S. patent applications, Ser. No. 10/456,599, filed Jun. 6, 2003, now U.S. Pat. No. 7,004,593; Ser. No. 10/287,178, filed Nov. 4, 2002, now U.S. Pat. No. 6,678,614; Ser. No. 10/645,762, filed Aug. 20, 2003, now U.S. Pat. No. 7,167,796; and Ser. No. 10/422,378, filed Apr. 24, 2003, now U.S. Pat. No. 6,946,978; and/or PCT Application No. PCT/US03/40611, filed Dec. 19, 2003, which are all hereby incorporated herein by reference.

Optionally, a user input may be provided to selectively input the location or zone or region of the vehicle to establish

the appropriate setting for the imaging system. For example, a user may change from an "imperial" setting (such as used in the U.S.), where the numbers may be interpreted by the imaging system as being in miles per hour, to a "metric" setting, where the numbers may be interpreted by the imaging system as being in kilometers per hour, such as when the driver drives the vehicle from the U.S. to Canada. Optionally, if the vehicle has a global positioning system (GPS), the setting for a particular location or zone at which the vehicle is located may be automatically set to the appropriate units or setting in response to a signal from the global positioning system that is indicative of the current location or position of the vehicle. Other zones or regions may be selectively or manually input or automatically set to set or calibrate the imaging system for the particular zone or region or country in which the vehicle is traveling (where the numbers may be interpreted according to the units used in that zone or region or country and where the detected signs or objects are compared to the expected sign shapes, sizes, colors and the like of that zone or region or country).

Optionally, the expected or recognized or accepted sign size, shape, color, etc. may be looked up in a table or database or the like by the image processor, in order to determine if a detected sign or object is within the expected or specified parameters of a particular type of sign and, thus, to determine if the detected object or sign qualifies as a particular type of traffic control sign. For example, if the imaging system detects an object that is generally in the area and of the size of a traffic control sign, the system may further analyze the sign parameters in view of a table or listing or database of parameters of various signs along different types of roads or the like, in order to determine if the detected sign qualifies as one of the particular traffic control signs in the table or set of data. The imaging system thus may determine what type of sign has been detected by matching the parameters of the detected sign or object with the expected or specified parameters of one of the signs listed in the look-up table or database.

After the sign has been identified as a certain type of sign, further processing of the sign may commence to determine or read the characters or information on the face of the sign. The imaging processor **16** may further identify or read the characters on the detected sign via recognition of the shapes or geometries and arrangement of the characters on the sign, such as via utilization of the image processing and/or edge detection discussed above. For example, after the image processor has identified a detected sign as being representative of a speed limit sign, the image processor may determine what numbers are shown on the sign to determine the speed limit for the zone or area through which the vehicle is traveling. The imaging system knows that the characters "read" from the sign are for the speed limit (rather than for an exit number or a billboard advertisement or the like) based on the initial analysis of the sign's size/shape/color/location discussed above. The image processor then may generate an output to cause the display device to display information about the current speed limit as indicated by the detected sign and characters. For example, the display device may display the speed limit to the driver of the vehicle.

Optionally, the image processor **16** may receive an input signal from a vehicle speed sensor or sensing means **24**, and may display the amount (such as in miles per hour or kilometers per hour or the like) that the vehicle is traveling in excess of (or under) the current speed limit. The speed sensor may comprise any type of sensor or sensing means for determining the speed of the vehicle, such as a wheel speed sensor, a global positioning system or the like. Optionally, the vehicle speed may be determined via processing of the images captured by the imaging device **14**, such as via principles described in U.S. patent application Ser. No. 10/427,051, filed Apr. 30, 2003, now U.S. Pat. No. 7,038,577, and/or U.S. provisional application Ser. No. 60/638,687, filed Dec. 23, 2004, which are hereby incorporated herein by reference.

Optionally, a desirable display may comprise the actual vehicle speed shown at or near or adjacent to or side by side the actual posted and detected speed limit, in order to provide a visible display of the current speed and the posted or allowed speed limit. It is envisioned that the display may provide numbers or bars or icons or the like to indicate the vehicle speed and posted speed limit for such a display. The display may adjust the display of the speed and/or the posted speed limit (such as by increasing the intensity of the display or flashing the display or the like) if the vehicle speed is above (or below) the posted and detected speed limit by a threshold amount.

Optionally, one or both of the display elements may be highlighted or adjusted in a different manner depending on the driving condition encountered by the vehicle. For example, when the vehicle speed is within the specified threshold/tolerance of the posted speed limit, the display may be set at a particular intensity or color or the like (such as, for example, a green color), but when the vehicle speed is above the specified threshold or tolerance, the display may be adjusted to a different intensity (such as brighter) or color or the like (such as, for example, a red color). Similarly, when the vehicle speed is below the specified threshold/tolerance, the display may be adjusted to a different intensity or color or the like (such as, for example, a blue color). Other intensities or flashing or color changes or highlighting of one or more display elements may be implemented in response to the different driving/speed conditions encountered by the vehicle, without affecting the scope of the present invention.

Optionally, the image processor may provide an alert or warning to the driver when the vehicle speed exceeds a threshold amount over (or under) the posted (and recognized) speed limit. For example, the display device may flash or adjust the intensity of the displayed speed limit or the image processor may actuate an audible signaling device **26** to provide an audible warning, such as a beep or voice warning or the like, when the vehicle speed exceeds (or falls below) the posted and recognized speed limit by a threshold amount (such as approximately five or ten miles per hour above or below the posted limit or the like). For example, the imaging system may provide a higher pitch audible tone when the vehicle speed is above the posted speed limit (or at a threshold amount above the posted speed limit), and may provide a lower pitch audible tone when the vehicle speed is below the posted speed limit (or at a threshold amount below the posted speed limit). Other alerts or signals may be provided by the imaging system, such as tactile/haptic type alerts, such as a rumble or vibration of the seat or steering wheel or the like, without affecting the scope of the present invention. The desired threshold amount may be selectively entered by the driver, such as via a key pad, a touch pad, a voice receiver or the like, such that the imaging system may only provide such a warning when it may be desired by the particular driver of the vehicle. Optionally, it is envisioned that the operation of the vehicle may be influenced by the posted and detected speed limit, such as by a governor or the like that may limit the maximum speed of the vehicle to within a threshold amount above the posted speed limit.

Optionally, the image processor may provide an alert or warning when the detected and posted speed limit changes, such as when the vehicle moves from one speed zone (such as 55 miles per hour or the like) to another speed zone (such as

35 miles per hour or the like), so as to warn the driver to slow down (or to speed up if the later zone has a higher speed limit). For example, when a speed limit is detected that is lower (or higher) than the previously detected speed limit, the image processor may cause the display device to display the new speed limit, and may flash or otherwise change or enhance the display to draw the driver's attention to the display. Optionally, the display device may display a notice that the speed limit has changed, such as "Speed Limit Reduced—Slow Down" or the like. Optionally, the image processor may actuate an audible signaling device to provide a tone or beep or voice message to audibly communicate to the driver that the driving conditions have changed, or may actuate a tactile/haptic signaling device (or other type of signaling device) to provide a tactile or haptic signal (or other type of signal or alert) to the driver of the vehicle to communicate such changes in the driving conditions to the driver of the vehicle.

Optionally, the threshold amount over/under the posted and determined speed limit at which the alert is provided may be dynamic and thus may change depending on the determined speed limit. More particularly, the threshold amount over a posted speed limit may be greater for speed limit zones having higher speed limits, such as 55 miles per hour or above, while the threshold amount may be lower for speed limit zones having lower speed limits, such as 25 miles per hour or 35 miles per hour or less. For example, if the threshold amount is selected to be ten miles per hour over the speed limit when the speed limit is seventy miles per hour, the imaging system may dynamically adjust or reduce the threshold amount for lower speed limit zones, so that the threshold amount may be only, for example, three miles per hour for a 25 miles per hour zone. The imaging system thus may dynamically adapt to the driving conditions or speed limits or zones encountered by the vehicle, because what may be a safe and reasonable amount over a 65 miles per hour speed limit (such as five to ten miles per hour) may be much worse or less safe if applied to a slower zone, such as a 25 miles per hour zone or thereabouts.

The imaging system may also be operable to detect and recognize and read warning signs, such as at turns or hills or the like, or may detect and recognize and read other types of warning signage or the like. For example, the imaging system may detect a warning sign that indicates that a turn is approaching and that the safe speed of travel around the turn is reduced to a lower speed, such as, for example, 45 miles per hour for a turn located in a 55 miles per hour zone, or such as, for example, a reduced speed for an exit ramp off of a highway or freeway or the like. The imaging system may then display the reduced speed limit or reduced recommended speed to alert the driver of the slower speed zone and/or may then generate a warning signal or alert signal (such as a visible and/or audible and/or tactile/haptic signal) to the driver if the current vehicle speed is greater than the reduced or safe or posted speed (or substantially greater than the posted speed or at or above a threshold amount greater than the posted speed or the like). The driver may then be alerted to the potentially hazardous condition and may adjust the speed of the vehicle accordingly.

Optionally, the imaging system may be operable to detect and identify or recognize other types of signs. For example, the imaging system may be operable to detect and recognize a railroad crossing sign and to further recognize that the railroad crossing sign is activated (such as by distinguishing the flashing lights characteristic of a railroad crossing signal) due to an approaching train. The imaging system could then warn the driver that the vehicle is approaching a dangerous condition. Additionally, the imaging system may be operable to detect other signals, such as a school bus stopping signal or a pedestrian road crossing signal or the like. Optionally, the imaging system may be operable to detect road repair or road construction zone signs and may recognize such signs to distinguish when the vehicle is entering a road construction zone. The imaging system may display the reduced speed for the construction zone and/or may provide an alert to the driver of the vehicle that the vehicle is entering a construction zone and that the vehicle speed should be reduced accordingly. The imaging system thus may not only assist the driver in avoiding a speeding ticket, but may provide enhanced safety for the construction workers at the construction zone.

Optionally, the imaging system of the present invention may be associated with or cooperatively operable with an adaptive cruise control **28** (FIG. **2**) of the vehicle, such that the cruise control speed setting may be adjusted in response to the imaging system. For example, an adaptive speed control system may reduce the set speed of the vehicle in response to the imaging system (or other forward facing vision system) detecting a curve in the road ahead of the vehicle (such as by detecting and recognizing a warning sign at or before such a curve). The vehicle speed may be reduced to an appropriate speed for traveling around the curve without the driver having to manually deactivate the cruise control. For example, the vehicle speed may be reduced to the amount of the reduced or safe limit shown on the warning sign or the like. The adaptive speed control may then resume the initial speed setting after the vehicle is through the turn or curve and is again traveling along a generally straight section of road.

Optionally, the adaptive speed control may adjust the speed setting of the vehicle in response to the imaging system recognizing and identifying a change in speed limit. For example, if the vehicle is initially traveling at seventy miles per hour in a 65 miles per hour zone, and the imaging system detects a reduced speed limit to 45 miles per hour, the adaptive speed control may reduce the speed setting to fifty miles per hour or thereabouts. The imaging system may also provide the alert or warning to the driver when the speed limit change is detected, as discussed above. The adaptive speed control may be any type of adaptive speed control, and may utilize aspects of the controls of the types described in U.S. patent application Ser. No. 10/427,051, filed Apr. 30, 2003, now U.S. Pat. No. 7,038,577, and/or U.S. provisional application Ser. No. 60/638,687, filed Dec. 23, 2004, which are hereby incorporated herein by reference, without affecting the scope of the present invention.

Although described above as being operable to determine the speed limit or reduced speed posted on a sign detected by the imaging system, the imaging system of the present invention may also process the captured images to determine characters on other types of signs as well, such as exit signs or the like. For example, the imaging system may be associated with or in communication with a navigational system, and may signal to the driver that the exit sign for a desired exit is approaching to limit or substantially preclude the possibility that the driver may miss the desired or targeted exit. The navigational system may comprise any type of navigational system, such as the types described in U.S. Pat. Nos. 6,477,464; 5,924,212; 4,862,594; 4,937,945; 5,131,154; 5,255,442 and/or 5,632,092, and/or U.S. patent applications, Ser. No. 10/456,599, filed Jun. 6, 2003, now U.S. Pat. No. 7,004,593; Ser. No. 10/287,178, filed Nov. 4, 2002, now U.S. Pat. No. 6,678,614; Ser. No. 10/645,762, filed Aug. 20, 2003, now U.S. Pat. No. 7,167,796; and Ser. No. 10/422,378, filed Apr. 24, 2003, now U.S. Pat. No. 6,946,978; and/or PCT Application No. PCT/US03/40611, filed Dec. 19, 2003; and/or PCT Application No. PCT/US04/015424, filed May 18, 2004,

which are all hereby incorporated herein by reference, without affecting the scope of the present invention.

Optionally, the imaging system may be operable to utilize data or information pertaining to a lane change and/or an exit sign or the like, and an adaptive cruise control system may adjust the speed of the vehicle or the acceleration of the vehicle in response to such lane divergent information and/or exit ramp information. For example, the imaging system may detect an exit sign along a freeway or the like, and may detect a lane change by the subject vehicle onto the exit ramp. The adaptive cruise control system may receive an input that is indicative of such detections and/or image processing, and may adjust the speed of the vehicle accordingly. For example, the adaptive cruise control system may decrease the speed of the vehicle and/or may inhibit acceleration of the vehicle in response to such detections/image processing, in order to limit or substantially preclude potentially hazardous conditions where the vehicle may accelerate to an unsafe speed on the exit ramp.

As discussed above, the imaging device and/or the display device may be positioned at or in an interior rearview mirror assembly of the vehicle. For example, the imaging device and/or the display device and/or the image processor may be positioned within a prismatic mirror assembly, such as a prismatic mirror assembly utilizing aspects described in U.S. Pat. Nos. 6,318,870; 5,327,288; 4,948,242; 4,826,289; 4,436,371 and 4,435,042, and PCT Pat. Application No. PCT/US04/015424, filed May 18, 2004, which are hereby incorporated herein by reference. Optionally, the prismatic reflective element may comprise a conventional prismatic reflective element or prism or may comprise a prismatic reflective element of the types described in PCT Application No. PCT/US03/29776, filed Sep. 19, 2003; U.S. patent applications, Ser. No. 10/709,434, filed May 5, 2004, now U.S. Pat. No. 7,420,756; and Ser. No. 10/993,302, filed Nov. 19, 2004, now U.S. Pat. No. 7,338,177, which are all hereby incorporated herein by reference, without affecting the scope of the present invention.

Alternately, for example, the interior rearview mirror assembly may comprise an electro-optic or electrochromic mirror assembly, which may utilize some of the principles described in commonly assigned U.S. Pat. Nos. 6,690,268; 5,140,455; 5,151,816; 6,178,034; 6,154,306; 6,002,544; 5,567,360; 5,525,264; 5,610,756; 5,406,414; 5,253,109; 5,076,673; 5,073,012; 5,117,346; 5,724,187; 5,668,663; 5,910,854; 5,142,407 and/or 4,712,879, which are hereby incorporated herein by reference, and/or as described in the following publications: N. R. Lynam, "Electrochromic Automotive Day/Night Mirrors", SAE Technical Paper Series 870636 (1987); N. R. Lynam, "Smart Windows for Automobiles", SAE Technical Paper Series 900419 (1990); N. R. Lynam and A. Agrawal, "Automotive Applications of Chromogenic Materials", Large Area Chromogenics: Materials and Devices for Transmittance Control, C. M. Lampert and C. G. Granquist, EDS., Optical Engineering Press, Wash. (1990), which are hereby incorporated by reference herein; and/or as described in U.S. patent application Ser. No. 10/054,633, filed Jan. 22, 2002, now U.S. Pat. No. 7,195,381, which is hereby incorporated herein by reference. The mirror assembly may include one or more other displays, such as the types disclosed in U.S. Pat. Nos. 5,530,240 and/or 6,329,925, which are hereby incorporated herein by reference, and/or display-on-demand transflective type displays, such as the types disclosed in U.S. Pat. Nos. 6,690,268; 5,668,663 and/or 5,724,187, and/or in U.S. patent application Ser. No. 10/054,633, filed Jan. 22, 2002, now U.S. Pat. No. 7,195,381; PCT Application No. PCT/US03/29776, filed Sep. 9, 2003; PCT Application No. PCT/US03/35381, filed Nov. 5, 2003; and/or PCT Application No. PCT/US03/40611, filed Dec. 19, 2003, which are all hereby incorporated herein by reference.

Optionally, the imaging device and/or display device and/or image processor may be positioned, for example, in or at or near an accessory module or windshield electronics module or console, such as the types described in U.S. patent applications, Ser. No. 10/355,454, filed Jan. 31, 2003, now U.S. Pat. No. 6,824,281; and Ser. No. 10/456,599, filed Jun. 6, 2003, now U.S. Pat. No. 7,004,593, and/or U.S. Pat. Nos. 6,690,268; 6,250,148; 6,341,523; 6,593,565 and 6,326,613, and/or in PCT Application No. PCT/US03/40611, filed Dec. 19, 2003, which are hereby incorporated herein by reference). Optionally, the imaging device may be positioned elsewhere in or at the vehicle, such as at or in the headliner of the vehicle or elsewhere at or in the vehicle, without affecting the scope of the present invention.

Optionally, the accessory module may include other accessories or circuitry therein, or may be associated with other accessories or circuitry of the interior rearview mirror assembly and/or of the vehicle. For example, the accessory module or mirror assembly may be associated with a proximity sensing device or antenna positioned along the interior surface of the windshield. The sensing device may detect the presence of an object, such as a raindrop or water droplets, at the exterior surface of the windshield and, thus, may function as a rain sensing device or rain sensor for sensing precipitation at the exterior surface of the windshield. The proximity sensing device may be positioned at an area of the windshield that is swept by the windshield wiper to clean the area.

The sensing device or antenna may detect the presence of moisture or precipitation when rain drops or condensation or the like are within its range of detection, and may generate an output signal in response to such a detection. The control may process the signals received from the sensing device to determine if an object indicative of rain drops or precipitation is detected or sensed at the windshield. The control may then actuate the windshield wipers of the vehicle in response to such indication. Optionally, the sensing device may sense the presence of objects, such as moisture, at the interior surface of the windshield and the control may process the signals to determine if the detected object is indicative of moisture at the windshield surface.

The control may actuate or control a blower motor or a control setting of a heating, ventilation and air conditioning (HVAC) system of the vehicle to defog the windshield and/or may close a sunroof or window of the vehicle when the control detects moisture on the surface of the windshield, such as by utilizing aspects of the rain sensors described in U.S. Pat. Nos. 6,516,664; 6,320,176; 6,353,392; 6,313,454; 6,341,523 and 6,250,148; and/or in U.S. patent applications, Ser. No. 10/355,454, filed Jan. 31, 2003, now U.S. Pat. No. 6,824,281; and Ser. No. 10/348,514, filed Jan. 21, 2003, now U.S. Pat. No. 6,968,736, which are hereby incorporated herein by reference. The proximity sensor may utilize the principles described in U.S. Pat. No. 5,594,222; and/or U.S. patent applications, Ser. No. 10/956,749, filed Oct. 1, 2004, now U.S. Pat. No. 7,446,924; and/or Ser. No. 10/933,842, filed Sep. 3, 2004, now U.S. Pat. No. 7,249,860; and/or PCT Application No. PCT/US03/40611, filed Dec. 19, 2003, which are hereby incorporated herein by reference.

Optionally, the proximity sensor may comprise a substantially transparent antenna or substantially transparent metallized antenna or substantially transparent conductor, such as a wire or wires embedded in the windshield or a conductive coating (such as indium tin oxide (ITO) or the like) on a window or panel surface, such as the interior surface of the

windshield. The proximity sensor of the present invention thus may provide or span or interrogate a larger sensing area without obstructing the field of view of the driver or occupant of the vehicle. Optionally, the proximity sensor may comprise multiple sensors or sensing elements or a multi-element sensing array or matrix that is operable to interrogate the windshield surface over a large area of the windshield. By interrogating a large area of the windshield, the rain sensing system of the present invention may sample multiple small segments of the whole sensing area. Such samplings may enhance the system's ability to discern between large raindrops on the windshield and small raindrops or mist on the windshield and other non-precipitation items, such as dirt or dust or the like, on the windshield.

Optionally, the antenna or proximity sensor or sensors or sensing elements may be incorporated into or attached to or associated with a windshield electronics module or accessory module positioned generally at or against the interior surface of the windshield. For example, the sensing element or elements may be attached to or positioned at or molded in the wall of the module that opposes and/or engages the interior surface of the windshield. The sensing element or elements may be electrically connected to rain sensor or control circuitry within the accessory module or elsewhere within the vehicle, such as at an interior rearview mirror assembly or overhead console or instrument panel of the vehicle.

Alternately, the sensing element or elements may be attached to the interior surface of the windshield, such as via an adhesive, such as via an adhesive tape such as a double sided adhesive tape or the like. The sensing element or elements thus may be positioned along the windshield surface without having to press the sensing element against the windshield surface to optically couple the sensing element to the windshield surface, as is often required in connection with many known rain sensing imaging devices.

The sensing element or elements of the present invention thus may be readily attached to the windshield surface, or may be formed on the windshield surface or may be embedded into the windshield, or may be incorporated into a windshield electronics module or accessory module at the windshield, without having to press the sensing element against the windshield surface. The sensing element or elements may be substantially transparent or not readily discernible by a driver or occupant of the vehicle, so that the sensing elements may cover and/or interrogate a large area of the windshield to provide enhanced sensing capabilities, without obstructing the field of view of the driver or occupant of the vehicle. The sensing element or elements may be implemented in conjunction with a rain sensor control that is operable to process signals from the sensing elements and to control a windshield wiper of the vehicle or a blower of the vehicle or an HVAC system of the vehicle or a defogger of the vehicle or a window or sunroof of the vehicle (such as to close the window or sunroof when rain is detected) or the like, in response to the signal processing.

Optionally, the accessory module and/or the interior rearview mirror assembly may include a forward facing braking indicator that is actuatable in response to a braking of the subject vehicle. The forward facing braking indicator may be viewable by a driver or occupant of a leading vehicle and may indicate to the driver or occupant of the leading vehicle that the subject vehicle approaching them is braking. The indicator may be in communication with a brake system of the vehicle, such as to a brake switch at the brake pedal or the like, and thus may indicate when the brakes are applied by the driver of the subject vehicle. The indicator may be operable in conjunction with the brake system and/or independently of the brake system (such as in response to a deceleration sensor or the like), and may utilize the principles described in U.S. Pat. Nos. 6,124,647; 6,291,906 and 6,411,204, which are hereby incorporated herein by reference.

The indicator thus alerts the other drivers or people in front of the subject vehicle that the vehicle is braking and, thus, may be highly useful at intersections with two, three or four way stops or the like. The indicator may be at or near or associated with an accessory module or windshield electronics module or console or interior rearview mirror assembly or the like of the vehicle and may be readily viewable and discernible by a person outside of and forwardly of the subject vehicle. The control may adjust or modulate the indicator to enhance the viewability or discernibility of the indicator, such as flashing or increasing the intensity of the indicator, such as in response to rapid or hard braking or the like of the subject vehicle or in response to a proximity or distance sensor detecting that the subject vehicle is within a threshold distance of another vehicle and/or is approaching the other vehicle at or above a threshold speed, such as described in U.S. Pat. Nos. 6,124,647; 6,291,906 and 6,411,204, which are hereby incorporated herein by reference.

Optionally, the imaging device may be associated with an accessory control system, such as a headlamp control system or the like. The imaging device may capture images of the field of view forwardly of the vehicle and the control may process the images and adjust a headlamp setting in response to such processing. Examples of such automatic headlamp control systems are described in U.S. Pat. Nos. 5,796,094; 6,097,023 and 6,559,435, and U.S. patent application Ser. No. 10/421,281, filed Apr. 23, 2003, now U.S. Pat. No. 7,004,606.

Optionally, the headlamp control may adjust a direction of the headlamps in response to such image processing. For example, the control may process the captured images to identify headlamps of oncoming vehicles and/or taillights of leading vehicles and may adjust the downward angle of the headlamps in response to such identification. The headlamps may be adjusted based on the identification of the headlamps or taillights and a predetermined or learned knowledge of the location of headlamps or taillights on vehicles, in order to adjust the headlamps to a desired or appropriate downward angle.

Optionally, the headlamps may be adjusted to compensate for vehicle loading so that the headlamps are directed in a desired direction regardless of the forward pitch or angle of the vehicle. For example, a forward (or rearward) edge of the low headlamp beam in front of the vehicle (such as at the road surface in front of the vehicle) may be identified and, based on the location of the detected edge or distance to the detected edge, the control may determine the loading angle or pitch of the vehicle. The control may then raise or lower the headlamp angle accordingly, so that the headlamp angle is set to approximately the desired direction regardless of the pitch or angle of the vehicle.

Optionally, the control may be operable to process the captured images to determine undulations in the road on which the vehicle is traveling and may utilize the processed information to determine the angle of the vehicle and the valleys and peaks in the road. The control may then adjust the headlamp beam angle and/or direction according to the detected undulations in the road. The control may be operable in conjunction with a forward facing imaging device and/or a rearward facing imaging device and may be operable in conjunction with or may be incorporated in a lane change assist system or lane departure warning system or the like, such as the types described in U.S. Pat. Nos. 5,929,786 and/or 5,786,772, and/or U.S. patent applications, Ser. No. 10/427,051,

filed Apr. 30, 2003, now U.S. Pat. No. 7,038,577; and Ser. No. 10/209,173, filed Jul. 31, 2002, now U.S. Pat. No. 6,882,287, which are hereby incorporated herein by reference.

Optionally, the control may process the captured images to detect headlamps of oncoming vehicles and to steer or direct the headlamp beams at least partially away from the detected oncoming vehicle. For example, the control may determine that an oncoming vehicle is approaching the subject vehicle in a lane that is to the left of the subject vehicle, and may steer the headlamp beams inboard or to the right to limit or reduce directing the headlamps into the eyes of the driver of the oncoming vehicle. The control thus may steer the headlamp beams inboard (or may steer the outboard or left headlamp beam inboard while keeping the right or opposite headlamp beam at the initial direction) when oncoming traffic is detected to limit glare to the drivers of the oncoming vehicles. In situations where the oncoming traffic is located to the right of the subject vehicle, the control may steer the headlamp beams (or the right headlamp beam while keeping the left or opposite headlamp beam unchanged) inboard or to the left to limit the glare to the drivers of the oncoming vehicle or vehicles. The steering of the headlamp beam or beams may be done in conjunction with the switching of the beams to a low beam setting, or may be done independently of the high/low beam setting of the headlamps.

Optionally, the control may process the captured images and may control or adjust a louver or filter or the like to direct the headlamp beams in a desired or appropriate direction. For example, a louver or baffle or slats or the like may be positioned in front of the headlamps, and the slats of the louver may be angled and adjusted to adjust the amount of light that passes through the louver. The louver slats thus may adjusted to an increased angle, such as a downward angle, relative to the headlamps to reduce the amount of light that passes through the louver (and thus that is visible in front of the vehicle) and thus to reduce the range of the headlamps. The louver control thus controls or adjusts the visible intensity and range of the headlamps, and may be operable to do this in response to a detection of oncoming traffic or a detection of leading traffic or any other input or detection, without affecting the scope of the present invention.

Optionally, the control may be operable to process the captured images to detect objects in front of the vehicle or forwardly of the vehicle and may control or adjust the display to indicate that an object is detected. For example, and particularly during nighttime driving conditions, the control may process the captured images captured by the forward facing imaging device to detect objects of interest that are in the forward field of view of the imaging device. The imaging device may utilize night vision principles, and may be operable in connection with an auxiliary light source or infrared radiation source to enhance the night vision capabilities of the imaging device. When an object of interest is detected, the control may process the image to extract the object data and may determine a distance to and location of the detected object relative to the vehicle and the projected path of the vehicle to further determine if the object is a threat to the subject vehicle, such as an animal moving toward or standing in the road ahead of the vehicle but not yet viewable/discernible to the driver of the vehicle.

If the detected object is also determined to be a threat or danger to the vehicle, such as a deer at the side of the road or on the road ahead of the vehicle but not yet viewable/discernible by the driver of the vehicle, the control may adjust or actuate or control a display device or element to display the detected object to the driver or may otherwise alert the driver of the potentially hazardous condition ahead. Optionally, the control may extract the object data or image data of the object (without the image data of the rest of the captured image) and may present the object image to the driver, or may identify the object and present an icon or indicia or message that indicates to the driver what the particular detected object is that is ahead of the vehicle. The control may control a display at the interior rearview mirror assembly or at an accessory module or the like, or may control a heads up display (HUD) that is operable to display the object or indicia in front of the driver and in the driver's field of view, so that the driver is aware of the detected object. Preferably, the control may display only the detected object (such as an image of a detected deer that is extracted from the captured image) at a location in the driver's field of view that generally or substantially corresponds to the location at which the object is actually positioned in front of the vehicle. Because the other image data is not projected or displayed, the driver is only notified of or alerted to the particular detected object or objects which the control determines present a hazardous condition (such as in response to the size of the object, the location of the object, the speed of the vehicle and/or the object, the direction of travel of the vehicle and/or the object, and/or the like).

In order to properly position the image of the object in the driver's field of view, such as via a heads up display, the control may also be operable in conjunction with an occupant detection system or cabin imaging system or the like that is operable to detect and determine the head position of the driver of the vehicle. The cabin imaging system thus may detect the head position of the driver, and the control may determine the appropriate location for the object image in the heads up display in accordance with the driver's head position.

Optionally, the control may be operable in conjunction with or may be incorporated into a lane departure warning system or the like, and may detect and identify lane markers along the road lane in front of the vehicle. The imaging device may be operable to detect or capture images of the lane markers in situations where the driver may not readily do so, such as in darkened or nighttime conditions or when there is glare on the road surface. The control may identify the lane markers in the captured images and may extract (via image processing) the lane marker data from the captured images or captured image data, and may project the lane marker images via a heads up display so that the driver may view the lane markers in the heads up display, where the lane marker image in the heads up display in the driver's field of view substantially corresponds to the actual location of the lane markers on the road surface.

In order to properly position the image of the lane markers in the driver's field of view, the control may be operable in conjunction with an occupant detection system or cabin imaging system as described above to determine the driver's head location. It is further envisioned that the control may adjust the display of the lane markers to indicate a lane drift or departure by the vehicle. For example, the lane marker images may be flashed or enhanced, such as by increasing the intensity or changing the color of the lane marker images, when such a lane drift is detected. The driver of the vehicle thus may be alerted to a lane change or drift or departure by adjusting the heads up display of the lane markers to draw the driver's attention to the lane markers without providing other unnecessary information to the driver. The lane departure warning system may utilize the principles described in U.S. Pat. Nos. 5,929,786 and/or 5,786,772, and/or U.S. patent applications, Ser. No. 10/427,051, filed Apr. 30, 2003, now U.S. Pat. No. 7,038,577; and Ser. No. 10/209,173, filed Jul. 31, 2002, now U.S. Pat. No. 6,882,287; and/or U.S. provi-

sional application Ser. No. 60/638,687, filed Dec. 23, 2004, which are hereby incorporated herein by reference.

Optionally, the imaging device may be selectively operable to provide a forward facing field of view and a rearward facing field of view or cabin viewing field of view. For example, and with reference to FIG. **6**, a forward facing imaging device **414** may be positioned within an accessory module or pod **420** and may be directed generally forwardly to provide a forward field of view through the windshield **421** of the vehicle. The accessory module **420** may include a movable reflector **438** that may be selectively moved relative to the imaging device **414**, such as along the windshield and in front of the imaging device as shown in FIG. **6**, to reflect an image of the cabin of the vehicle to the imaging plane or array of the imaging device. The accessory module may include a window or opening **420***a* at the windshield or toward the windshield for receiving images of the scene forwardly of the vehicle therethrough, and may also include a window or opening **420***b* along a lower or rearward side or portion of the module for receiving images of the scene occurring within the vehicle cabin therethrough. Although shown in FIG. **6** as reflecting an image from generally below the module to the imaging device, clearly, the angle of the movable reflector may be adjusted or selected to provide a more rearwardly directed field of view, depending on the application of the imaging system. For example, the angle may be selected to provide a generally rearward field of view for use with a backup aid or rear vision system, or the angle may be selected to reflect images from one side of the module, such as for use with an occupant detection system or a head position detection system or the like.

The movable reflector **438** may be selectively moved between a removed position (as shown in FIG. **6**), where the imaging device has a forward field of view and is operable to capture images of the scene occurring forwardly of the vehicle (such as for headlamp control, rain sensing, object detection and the like), and a reflecting position (as shown in phantom in FIG. **6**), where the imaging device receives the reflected image of a rearward view or of the cabin of the vehicle (such as for a backup aid or reverse imaging system or a cabin monitoring system or head position sensing system or the like). The movable reflector may be slidably moved along a portion of the accessory module or may be pivoted or otherwise moved between the removed position and reflecting position. The movable reflector may be moved between the positions automatically, such as in response to activation of a forward imaging system or a cabin imaging system or a backup aid, or may switch between the positions to provide the desired or appropriate head location data for use in conjunction with a forward imaging system and display, such as described above. Alternately, it is envisioned that the imaging device may be selectively movable to be directed forwardly through the windshield or toward a stationary reflector for capturing images of the cabin or rearward of the mirror assembly or accessory module, without affecting the scope of the present invention.

Optionally, the imaging system may be operable to determine the temperature at the imaging device, in order to determine or approximate the operating temperature of the imaging device. Although it is known to monitor the operating temperature of an imaging device in order to manage or allow for thermal shutdown of the imaging device to avoid overheating of the device, such systems or devices typically include separate temperature sensors positioned at or nearby the imaging sensor to determine the surrounding temperature. According to an aspect of the present invention, the imaging device, which comprises an imaging array having an array of photo-sensing pixels, may be operable to approximate the operating temperature based on the dark current of some of the pixels of the imaging array. More particularly, one or more pixels of the imaging array may be masked so that little or no light reaches the pixel. Because the changes in dark current (the current through the pixel when no light is received by the pixel) is generally proportionate to the changes in temperature of the pixel, a measurement of the dark current, in conjunction with a precalculation and/or relationship of the dark current and temperature, may provide an indication or approximation of the temperature at the pixelated array.

The control of the imaging system thus may be operable to shut down the imaging array sensor or shut down other electronic components of the control system or imaging system in response to the calculated or approximated or estimated temperature being greater than a predetermined threshold that is indicative of a temperature threshold for safe or effective operation of the imaging device and system. Optionally, the control may be operable to correct or adjust the sensor or system in response to detection or calculation of a threshold temperature, in order to correct or compensate for the increased temperature at the imaging sensor to enhance the performance of the imaging system or control system.

Optionally, the accessory module and/or interior rearview mirror assembly or system of the vehicle may include a hands free phone system, and thus may include the interface driver, microphone or microphones, user inputs, speech recognition system and/or the like. An example of such a system is described in PCT Application No. PCT/US03/40611, filed Dec. 19, 2003, which is hereby incorporated herein by reference. The audio signal from the system of the module or mirror assembly is preferably linked to the radio head, such as to a plug or connector at the radio head that accepts external audio signals and mute signals. The system thus may mute the audio and effectively take over the speakers when the phone is in use. This connection to the vehicle audio or radio or speaker system may utilize a communication link, such as a BLUETOOTH® communication protocol or link or the like. The signals from the mobile or cellular phone to the mirror assembly or accessory module may be communicated via a BLUETOOTH® link, while the signals from the mirror assembly or accessory module to the radio head may also be communicated via a BLUETOOTH® link. The mirror assembly or accessory module may also include a display, such as a transflective or display on demand display, to display at least some of the phone information, such as the number dialed, the incoming number, the status of the call, strength of signal, phone book, messages, and/or the like. Although described as utilizing a BLUETOOTH® communication link or protocol, other communication protocols or links may be implemented, such as other short/restricted range radio frequency (RF) or infrared (IR) communication protocol or link.

Optionally, a communication link between an accessory module or windshield electronics module and the interior rearview mirror assembly may be provided wirelessly and/or along and/or through the mounting arm of the mirror assembly. For example (and as described in U.S. patent application Ser. No. 10/456,599, filed Jun. 6, 2003, now U.S. Pat. No. 7,004,593, which is hereby incorporated herein by reference), the communication link may be via an infrared transmitter and receiver at the respective module and mirror assembly. Optionally (and as described in U.S. patent application Ser. No. 10/964,512, filed Oct. 13, 2004, now U.S. Pat. No. 7,308,341, which is hereby incorporated herein by reference), the communication link may be a two way link with the signals being communicated along the same wiring. Optionally, the mounting arm of the mounting assembly may include a pas-

sageway therethrough for routing an accessory wiring or the like through the arm to provide electrical communication between the circuitry or accessory of the mirror assembly and the circuitry or accessories or power source of the accessory module or of the vehicle. For example, the mounting assembly may utilize principles described in U.S. patent application Ser. No. 10/032,401, filed Dec. 20, 2001, now U.S. Pat. Publication No. US2002/0088916, published Jul. 11, 2002, now U.S. Pat. No. 6,877,709; and/or U.S. patent application Ser. No. 10/933,842, filed Sep. 3, 2004, now U.S. Pat. No. 7,249,860; and/or PCT Application No. PCT/US2004/015424, filed May 18, 2004; and/or U.S. provisional applications, Ser. No. 60/653,787, filed Feb. 17, 2005; Ser. No. 60/642,227, filed Jan. 7, 2005; Ser. No. 60/638,250, filed Dec. 21, 2004; Ser. No. 60/624,091, filed Nov. 1, 2004, and Ser. No. 60/609,642, filed Sep. 14, 2004, which are all hereby incorporated herein by reference, or may utilize electrical connection principles of the type described in International Publication No. WO 2003/095269, published Nov. 20, 2003, which is hereby incorporated herein by reference. Optionally, the mounting arm passageway may allow for infrared or visible light to be transmitted along the tube or arm to communicate signals to or from the mirror assembly. In such applications, the arm or mounting assembly may include reflectors or mirrored surfaces to guide and reflect the light between the source and receiver, and may adjust the reflectors to accommodate adjustment of the mirror head assembly relative to the mounting base. The mounting arm thus may provide a light conduit or path or pipe for light signals to be communicated or guided or directed to provide communication between the accessory module or pod and the interior rearview mirror assembly. Other means for providing electrical power and/or control to the circuitry and/or accessories of the mirror assembly may be implemented without affecting the scope of the present invention.

Optionally, the vehicle or the rearview mirror assembly or accessory module of the vehicle may include a communication system or interface system that is operable to communicate with a remote or external control or base or center of a telematic system, such as ONSTAR®, TELEAID™, RESCU® or the like, or with any other remote computerized server or database or information provider or the like. The data captured by an imaging device of the vehicle (such as a rearward facing imaging device or a cabin monitoring imaging device or a forward facing imaging device or another vehicle-based imaging device or camera) may be communicated to the communication system (the communication system may be at the camera device or the signals may be communicated to the communication system remote from the camera, such as via vehicle wiring or via a local wireless communication or the like), whereby the communication system may communicate the image data to the external control of the telematic system. The image data may be processed by the processor at the external control and a signal indicative of such image processing may be communicated from the external control to the communication system of the vehicle, where the appropriate information may be displayed or otherwise communicated or conveyed to the driver or occupant of the vehicle.

In some known imaging systems for vehicles, image data is communicated from the vehicle camera to a microprocessor in the vehicle where the image data is processed. Such a system typically requires connection of the camera and microprocessor and display or alert device via wires or local wireless connections and requires in vehicle processing and connections. Such a system is typically not conducive for sharing information gathered from the image processing with other systems or devices or vehicles.

The communication system of the present invention receives the image data and uploads the image data to the external control for processing. Optionally, the vehicle communication system may conduct a data compression routine to compress the image data prior to uploading the data to the external control. For example, the vehicle communication system may compress the data and upload the compressed data using "burst" technology (where compressed data are transmitted or communicated to a satellite or the like in short (such as, for example, about twelve milliseconds or thereabouts) signals or bursts) to convey large amounts of data to the external control. The external control may then process the image data and extract the desired or relevant information from the image data and may communicate a signal back to the vehicle that is indicative of the extracted information.

The communication system and telematic system of the present invention thus may harness the processing power of the external control, which may be substantially greater than the processing power of a vehicle-based microprocessor. The external control may receive the image data and may recognize that the data is being communicated from a particular vehicle. In applications where the vehicle includes a global positioning system (GPS), the external control may receive and process the image data and may receive an input that is indicative of the vehicle location. The external control thus may process the image data and location data to extract information and provide an output that may be relevant to the location of the vehicle. For example, the external control may process the image data and may determine the speed limit signage information in the appropriate units based on the vehicle location, such as described above.

The external control may also receive location data from other vehicles and thus may know the location of other vehicles relative to the subject vehicle. For example, if the vehicle-based imaging device is for an adaptive cruise control system, the external control may receive the forward viewing image data and may receive data indicative of the vehicle location. The external control may also receive location data from other vehicles and thus may know the relative location and movements of other vehicles. If, for example, the subject vehicle is approaching a curve in the road and another vehicle is approaching in the opposite direction from around the curve, the external control may communicate a signal to the subject vehicle that is indicative of the location of the other vehicle. For example, the external control may provide a signal to the vehicle whereby an alert or warning or display device of the vehicle operates to alert or warn the driver of the subject vehicle as to the location of the approaching vehicle, in order to reduce or avoid vehicle collisions.

Optionally, the imaging system of the vehicle may be associated with an adaptive front lighting (AFL) system. The imaging system may also be associated with a lane departure warning system or side object detection system or lane change assist system or the like. The imaging device of the imaging system may be a forward facing imaging device or camera that is operable to capture images of a forward field of view. The control or microprocessor (or external control of a telematic system or the like) may process the image data to identify lane markers and other objects of interest in the forward field of view, such as by utilizing the principles described in U.S. Pat. No. 5,929,786, and/or U.S. patent applications, Ser. No. 10/427,051, filed Apr. 30, 2003, now U.S. Pat. No. 7,038,577; and/or Ser. No. 10/209,173, filed Jul. 31, 2002, now U.S. Pat. No. 6,882,287, and/or U.S. provi-

sional application Ser. No. 60/638,687, filed Dec. 23, 2004, which are hereby incorporated herein by reference.

For example, the lane departure warning system may process the image data to detect the lane markers along the road surface in front of the vehicle. The lane departure warning system may detect a curvature in the road as the lane markers (or other characteristics, such as a curb or shoulder of the road) curve in front of the vehicle (such as by utilizing principles described in U.S. provisional application Ser. No. 60/638,687, filed Dec. 23, 2004, which is hereby incorporated herein by reference). Such road curvature information extracted from the image data may be used as an input or feed signal to the headlamp control system, which may adjust or control the headlamps to direct the headlamp beam toward one side or the other of the vehicle, in order to generally follow the curve of the road in front of the vehicle and, thus, to generally follow the anticipated path of the vehicle.

Typically, a lane departure warning system is interested in and may principally monitor the near field of view of the imaging device, such as, for example, about ten to twenty feet in front of the vehicle, while an intelligent headlamp control system and/or an adaptive front lighting system may principally monitor a further or far field of view of the imaging device. The processor thus may process different areas of the captured image data for the different applications. For example, the processor may process the captured image data in a frame-by-frame manner, and may process different areas of the image to extract different information for some of the frames (such as by utilizing the principles described in U.S. provisional applications, Ser. No. 60/630,061, filed Nov. 22, 2004; Ser. No. 60/628,709, filed Nov. 17, 2004; Ser. No. 60/614,644, filed Sep. 30, 2004; and/or Ser. No. 60/618,686, filed Oct. 14, 2004, which are hereby incorporated herein by reference).

Thus, if the imaging device captures frames at a rate of about thirty frames per second (or other frame rate depending on the particular application and system capabilities and the like), the processor may process different frames for different functions or systems or the processor may selectively process a given frame or frames for more than one functionality or feature. For example, every third frame may be processed for the lane departure warning system, while every fifth frame may be processed for the adaptive front lighting system, while every second frame may be processed for the intelligent headlamp control system. Alternatively, any one frame or sets of frames may be processed for intelligent headlamp control only, while other frames or sets of frames may be processed for lane departure warning and/or adaptive front lighting. The microprocessor thus may process different portions or areas of the image data for different functions or systems of the vehicle. The less relevant image data from the particular sets of frames thus may be processed less by the microprocessor so that the microprocessor has reduced or focused processing of the image data sets that is focused on the particular area of the image data that is relevant to the particular system or function for that particular frame or set of frames. Optionally, different processors may process the image data or may process different frames of image data captured by the imaging device or camera. Optionally, the reduced processed frame data may accumulate over several frames to provide a history and/or content/background for a given functionality, such as for an adaptive front lighting system.

Thus, a single camera and optical system can provide at least triple functionality, such as intelligent headlamp control, lane departure warning, and adaptive front lighting. For example, the image data captured by a single forward facing camera and associated lens and optical system can be processed and the information extracted can be used to control the headlamps on/off or high beam/low beam settings, to detect and monitor lane markers, and to provide an input or feed to a headlamp controller that may adjust or redirect the headlamp beam for an adaptive front lighting system.

Desirably, the system may intelligently process the image data and harness the processing power and frame rate to provide enhanced dynamic processing of image data depending on the particular lighting conditions. For example, the system may bias the processing toward extracting information from the image data for the headlamp control when the ambient lighting conditions are reduced, such as at nighttime, and may bias the processing toward extracting information from the image data for the lane departure warning system when the ambient lighting conditions are increased, such as during daytime or other conditions when it is less likely that headlamp control is needed. The processor or imaging system thus provides dynamic processing of the captured image data to enhance the performance of the associated headlamp control function, adaptive front lighting function and lane departure warning function.

Optionally, a rearview mirror and/or accessory module or windshield electronics module of a vehicle may include or may be associated with a storage medium for storing digital data or the like. For example, the mirror or module may include circuitry or accessories to record data (such as music from an iPod or MP3 player or the like) to a memory card and/or disc or other storage medium, such as a mini hard drive, or the like. For example, the rearview mirror assembly or accessory module may include a hard disc drive (HDD) electronic mass storage device, such as a HDD microdrive, such as a one-inch (or smaller) HDD, such as the types developed by Hitachi Global Storage Technologies, Inc. (HGST) of the United States, Hoya Corp. of Japan, and Seagate Technology LLC, and such as described in U.S. patent application Ser. No. 10/933,842, filed Sep. 3, 2004, now U.S. Pat. No. 7,249,860, which is hereby incorporated herein by reference. The data that is stored in the storage medium may then be "played" by the system and streamed through the speakers of the vehicle to play the music or playback the recording or the like that is stored in the storage medium. Optionally, the memory or storage medium may be removed from the mirror or accessory module and plugged into or connected to the iPod or MP3 player or the like (and vice versa), in order to playback the music or information stored on the storage medium with the different playback devices.

Optionally, the driver or other occupant of the vehicle may bring his or her digital audio player (such as an iPod or similar MP3 or other device) and dock at an interior mirror location (such as at a video slide-out mirror) or at a windshield electronics module (WEM) location (such as is disclosed, for example, in U.S. Pat. Nos. 6,428,172; 6,501,387 and 6,329,925, which are hereby incorporated herein by reference). Information relating to the audio device (such as track number or song title or index or the like) may be displayed at the interior mirror assembly (such as using display-on-demand transflective mirror reflector technology as described herein), or may be displayed on a video slide-out mirror screen (such as disclosed in PCT Application No. PCT/US03/40611, filed Dec. 19, 2003, and/or U.S. provisional application Ser. No. 60/630,061, filed Nov. 22, 2004, which are hereby incorporated herein by reference) or may be displayed at a WEM. Also, controls to operate the consumer portable device, such as an iPod or the like, may be included at the interior mirror assembly and/or at a WEM. While docking has the added advantage of providing electrical current from the vehicle battery/ignition system to recharge the portable device, such

as an iPod or similar MP3 player, the iPod device optionally need not dock and can be in wireless communication with the interior mirror and/or WEM via a short range wireless communication protocol, such as BLUETOOTH® or the like. Of course, if desired, wired connection can also be used.

Optionally, a docking station can be provided other than at the interior mirror or WEM. For example, an iPod or a similar audio device or a video playback device (such as a DVD player) can dock at a docking cradle located between the front seats and can be in wireless communication (such as via BLUETOOTH®) and/or optionally can be in wired communication with the interior mirror and/or WEM, where the aforementioned displays and/or controls may be readily available to the driver or other occupant of the vehicle. The music or other audio or data files stored on the iPod or similar MP3 player or data storage device may be played via the audio system of the vehicle, and the driver or other front seat occupant can readily access the displays/controls at the interior mirror or WEM location.

Optionally, the data may be automatically recorded and stored on the storage medium incorporated into an interior mirror assembly and/or a WEM and/or an exterior mirror assembly or may be selectively stored on the storage medium. For example, a user may connect or plug in their iPod or MP3 player or cellular telephone or portable telephone or the like into a receiver or socket (such as at an interior mirror or at a WEM) and the data may be transferred or streamed onto the storage medium of that vehicular location so that the recording may be played back through the vehicle speakers of the vehicle audio system. Optionally, the data transfer may be accomplished wirelessly, such as via an IR and/or an RF wireless link. Optionally, the user may selectively record information or music from radio signals (such as signals broadcast to an AM/FM radio of the vehicle or to an XM satellite radio or the like), or the user may selectively record information or music from wireless INTERNET signals or the like (such as from a music download website or the like) where the transmitted or broadcast information may be transferred or streamed to the storage medium or disc or the like of the mirror assembly or accessory module of the vehicle. Optionally, the stored data or information or music may be transferred or streamed from the storage medium of the mirror or WEM to a portable device, such as an iPod or MP3 player or cellular telephone or portable telephone or the like for playback at a different time and remote from the vehicle.

Optionally, the recording or playback system of the vehicle may be voice activated, such that a user may provide a voice command to record or playback a particular track. For example, a user may select a specific track or tracks stored on a storage medium (such as the storage medium of the mirror or accessory module or the like or a storage medium of an MP3 player or iPod device or the like), and the track or tracks may be played accordingly. The system of the present invention thus may provide for voice activation of an MP3 player, such as via, preferably, a microphone or microphones located at the interior mirror assembly or at a WEM or the like, when the player is plugged into or connected to or in communication with the recording and/or playback system of the present invention.

It is further envisioned that the recording and/or playback system of the present invention may provide delayed playback of a recording that is made generally at the same time that it is being played back. For example, it may be desirable to remove commercial content from a radio (such as satellite radio or XM radio) transmission, since some satellite radio transmissions or broadcasts or signals or outputs now may include commercial content. If desired, the recording and/or playback system of the present invention could selectively record a transmission and begin playing the transmission back with a time delay. While the system plays the delayed output, the system may identify and remove commercial content (or other undesirable content) and continue playing the output without interruption. The user thus may select a record and play mode and hear substantially continuous output without the commercial content or otherwise undesired content.

Although shown and described as being positioned so as to have a forward field of view, it is also envisioned that the imaging device may be directed to have a field of view generally rearwardly or sidewardly of the vehicle to capture images of a rearward or sideward scene, without affecting the scope of the present invention. For example, the imaging device may be positioned at a rearward portion of the vehicle and/or may be used in connection with a rear vision system or the like, such as the types described in U.S. Pat. Nos. 5,550,677; 5,760,962; 5,670,935; 6,201,642 and/or 6,717,610, and/or in U.S. patent applications, Ser. No. 10/010,862, filed Dec. 6, 2001, now U.S. Pat. No. 6,757,109; Ser. No. 10/418,486, filed Apr. 18, 2003, now U.S. Pat. No. 7,005,974, which are hereby incorporated herein by reference.

Optionally, the imaging device may be positioned at or near or at least partially within a door handle of a side door of the vehicle. The imaging device thus may provide a sideward field of view, such as for a side object detection system or lane change assist system or for a security system or the like.

The imaging device of the imaging system of the present invention thus is operable to capture multiple images or frames of the scene as the vehicle travels along the road, and may detect and recognize various street and/or traffic signs via processing of the captured images. If a detected sign is determined to be a speed limit sign or other traffic control sign of interest (such as a warning sign or the like), the imaging system may be operable to further process the images to determine or recognize the speed limit numbers on a speed limit sign and to provide an alert or warning signal to the driver of the vehicle if the vehicle exceeds the posted and recognized speed limit by a predetermined amount. The imaging system may have an interface (such as a user actuatable input or button, a voice receiver, a touch screen and/or the like) that would set a personal threshold for over-speed warning. The imaging device and/or imaging system may be multi-tasking and, thus, may be operable to detect headlamps and taillights and/or precipitation and/or objects and/or the like for or in connection with other accessories or systems, such as a headlamp control system, a precipitation sensor system, an adaptive speed control system, a lane departure warning system, a traffic lane control system and/or the like.

Changes and modifications in the specifically described embodiments can be carried out without departing from the principles of the present invention, which is intended to be limited only by the scope of the appended claims as interpreted according to the principles of patent law.

What is claimed is:

1. A vision system for a vehicle, said vision system comprising:

a forward facing camera disposed at a windshield of a vehicle equipped with said vision system, said forward facing camera having a forward field of view through the windshield of the equipped vehicle;

said forward facing camera comprising an imaging array sensor and a lens;

wherein said forward facing camera is operable to capture image data for a plurality of driver assistance systems of the equipped vehicle;

an image processor operable to process captured image data;

wherein, responsive at least in part to processing by said image processor of captured image data, a lane of a road along which the equipped vehicle is traveling is determined;

wherein, responsive at least in part to processing by said image processor of captured image data, an oncoming vehicle approaching the equipped vehicle is detected;

wherein said plurality of driver assistance systems of the equipped vehicle comprises a lane departure warning system of the equipped vehicle;

wherein said plurality of driver assistance systems comprises at least two other driver assistance systems;

wherein, responsive at least in part to processing by said image processor of captured image data, lane markers of the road lane along which the equipped vehicle is traveling are detected;

wherein, responsive at least in part to processing by said image processor of captured image data, road curvature information is extracted;

wherein, responsive at least in part to processing by said image processor of captured image data, a surface property of the road being travelled by the equipped vehicle is detected; and

wherein, responsive at least in part to processing by said image processor of captured image data, a light beam emanating from a headlamp of the equipped vehicle is adjusted in a manner that limits directing beam light towards the eyes of a driver of the detected oncoming vehicle.

2. The vision system of claim **1**, wherein at least one of said two other driver assistance systems is selected from the group consisting of (i) an intelligent headlamp control system of the equipped vehicle, (ii) a traffic sign recognition system of the equipped vehicle, (iii) an adaptive cruise control system of the equipped vehicle and (iv) an adaptive front lighting system of the equipped vehicle.

3. The vision system of claim **1**, wherein one of said two other driver assistance systems comprises an adaptive front lighting system of the equipped vehicle and wherein, responsive at least in part to processing by said image processor of captured image data, a light beam from a headlamp of the equipped vehicle is directed so as to follow the road curvature of the road along which the equipped vehicle is travelling.

4. The vision system of claim **1**, wherein captured image data is dynamically processed by said image processor.

5. The vision system of claim **4**, wherein at least one of said two other driver assistance systems is selected from the group consisting of (i) an intelligent headlamp control system of the equipped vehicle and (ii) an adaptive front lighting system of the equipped vehicle, and wherein image data captured during daytime is processed more for lane departure warning than for lighting control.

6. The vision system of claim **1**, wherein the detected surface property of the road being travelled by the equipped vehicle comprises an undulation.

7. The vision system of claim **6**, wherein, responsive to detection of an undulation, at least one of (i) a headlamp beam angle of the equipped vehicle is adjusted and (ii) a headlamp beam direction of the equipped vehicle is adjusted.

8. The vision system of claim **1**, wherein one of said two other driver assistance systems comprises a traffic sign recognition system of the equipped vehicle, and wherein sign recognition is adapted to a current geographical location of the equipped vehicle, and wherein the current geographical location of the equipped vehicle is determined by a global positioning system.

9. The vision system of claim **1**, wherein one of said two other driver assistance systems comprises an adaptive cruise control system of the equipped vehicle, and wherein said adaptive cruise control system reduces the speed of the equipped vehicle responsive at least in part to a detection of a curve in the road ahead of the equipped vehicle via processing by said image processor of captured image data.

10. The vision system of claim **9**, wherein said adaptive cruise control system reduces the speed of the equipped vehicle to a reduced speed for traveling around the curve in the road, and wherein said adaptive cruise control system increases the speed of the equipped vehicle to above the reduced speed when the equipped vehicle is traveling along a straighter section of road after the curve in the road.

11. The vision system of claim **1**, wherein a display system of the equipped vehicle generates a display of lane markers that is viewable by a driver of the equipped vehicle, and wherein at least one of (i) said generated display of lane markers substantially corresponds to the detected lane markers and (ii) responsive at least in part to processing by said image processor of captured image data, said generated display is adjusted to alert the driver to a lane drift or a lane departure by the equipped vehicle.

12. A vision system for a vehicle, said vision system comprising:

a forward facing camera disposed at a windshield of a vehicle equipped with said vision system, said forward facing camera having a forward field of view through the windshield of the equipped vehicle;

said forward facing camera comprising an imaging array sensor and a lens;

wherein said forward facing camera is operable to capture image data for a plurality of driver assistance systems of the equipped vehicle;

an image processor operable to process captured image data;

wherein, responsive at least in part to processing by said image processor of captured image data, a lane of a road along which the equipped vehicle is traveling is determined;

wherein, responsive at least in part to processing by said image processor of captured image data, an oncoming vehicle approaching the equipped vehicle is detected;

wherein, responsive at least in part to processing by said image processor of captured image data, said vision system determines whether a detected oncoming vehicle is in a lane to the right of the determined lane along which the equipped vehicle is traveling or is in a lane to the left of the determined lane along which the equipped vehicle is traveling;

wherein, responsive at least in part to processing by said image processor of captured image data, lane markers of the road lane along which the equipped vehicle is traveling are detected;

wherein a display system of the equipped vehicle generates a display of lane markers viewable by a driver of the equipped vehicle;

wherein, responsive at least in part to processing by said image processor of captured image data, said generated display is adjusted to alert the driver to a lane drift or a lane departure by the equipped vehicle; and

wherein adjustment of said generated display comprises at least one of (i) flashing of displayed lane markers, (ii)

color change of displayed lane markers and (iii) increase in display intensity of displayed lane markers.

13. A vision system for a vehicle, said vision system comprising:

a forward facing camera disposed at a windshield of a vehicle equipped with said vision system, said forward facing camera having a forward field of view through the windshield of the equipped vehicle;

said forward facing camera comprising an imaging array sensor and a lens;

wherein said forward facing camera is operable to capture image data for a plurality of driver assistance systems of the equipped vehicle;

an image processor operable to process captured image data;

wherein, responsive at least in part to processing by said image processor of captured image data, a lane of a road along which the equipped vehicle is traveling is determined;

wherein, responsive at least in part to processing by said image processor of captured image data, an oncoming vehicle approaching the equipped vehicle is detected;

wherein said plurality of driver assistance systems of the equipped vehicle comprises a lane departure warning system of the equipped vehicle;

wherein said plurality of driver assistance systems comprises at least two other driver assistance systems;

wherein, responsive at least in part to processing by said image processor of captured image data, road curvature information is extracted;

wherein captured image data is dynamically processed by said image processor; and

wherein a display system of the equipped vehicle generates a display of lane markers that is viewable by a driver of the equipped vehicle, and wherein at least one of (i) said generated display of lane markers substantially corresponds to the detected lane markers and (ii) responsive at least in part to processing by said image processor of captured image data, said generated display is adjusted to alert the driver to a lane drift or a lane departure by the equipped vehicle.

14. The vision system of claim **13**, wherein, responsive at least in part to processing by said image processor of captured image data, a light beam emanating from a headlamp of the equipped vehicle is adjusted.

15. The vision system of claim **13**, wherein, responsive at least in part to processing by said image processor of captured image data, a surface property of the road being travelled by the equipped vehicle is detected.

16. The vision system of claim **15**, wherein, responsive at least in part to processing by said image processor of captured image data, lane markers of the road lane along which the equipped vehicle is traveling are detected.

17. A vision system for a vehicle, said vision system comprising:

a forward facing camera disposed at a windshield of a vehicle equipped with said vision system, said forward facing camera having a forward field of view through the windshield of the equipped vehicle;

said forward facing camera comprising an imaging array sensor and a lens;

wherein said forward facing camera is operable to capture image data for a plurality of driver assistance systems of the equipped vehicle;

an image processor operable to process captured image data;

wherein, responsive at least in part to processing by said image processor of captured image data, an oncoming vehicle approaching the equipped vehicle is detected;

wherein said plurality of driver assistance systems of the equipped vehicle comprises a lane departure warning system of the equipped vehicle;

wherein said plurality of driver assistance systems comprises at least two other driver assistance systems;

wherein, responsive at least in part to processing by said image processor of captured image data, a surface property of the road being travelled by the equipped vehicle is detected;

wherein at least one of said two other driver assistance systems is selected from the group consisting of (i) an intelligent headlamp control system of the equipped vehicle, (ii) a traffic sign recognition system of the equipped vehicle, (iii) an adaptive cruise control system of the equipped vehicle and (iv) an adaptive front lighting system of the equipped vehicle; and

wherein, responsive at least in part to processing by said image processor of captured image data, a light beam emanating from a headlamp of the equipped vehicle is adjusted in a manner that limits directing beam light towards the eyes of a driver of an oncoming vehicle.

18. The vision system of claim **17**, wherein, responsive at least in part to processing by said image processor of captured image data, a lane of the road along which the equipped vehicle is traveling is determined.

19. The vision system of claim **18**, wherein, responsive at least in part to processing by said image processor of captured image data, road curvature information is extracted.

* * * * *