US009227138B2

(12) **United States Patent**
Ikeda

(10) **Patent No.: US 9,227,138 B2**
(45) **Date of Patent: Jan. 5, 2016**

(54) **GAME CONTROLLER AND GAME SYSTEM**

(71) Applicant: **Nintendo Co., Ltd.**, Kyoto (JP)

(72) Inventor: **Akio Ikeda**, Kyoto (JP)

(73) Assignee: **Nintendo Co., Ltd.**, Kyoto (JP)

(*) Notice: Subject to any disclaimer, the term of this patent is extended or adjusted under 35 U.S.C. 154(b) by 0 days.

(21) Appl. No.: **14/585,318**

(22) Filed: **Dec. 30, 2014**

(65) **Prior Publication Data**

US 2015/0119146 A1 Apr. 30, 2015

Related U.S. Application Data

(60) Continuation of application No. 14/330,403, filed on Jul. 14, 2014, which is a continuation of application No. 12/285,812, filed on Oct. 15, 2008, now Pat. No. 8,834,271, which is a division of application No.

(Continued)

(30) **Foreign Application Priority Data**

Aug. 24, 2005 (JP) 2005-242926
Apr. 26, 2006 (JP) 2006-122681

(51) **Int. Cl.**
A63F 13/20 (2014.01)
A63F 13/40 (2014.01)

(Continued)

(52) **U.S. Cl.**
CPC ***A63F 13/06*** (2013.01); ***A63F 13/10*** (2013.01); ***A63F 13/211*** (2014.09); ***A63F 13/24*** (2014.09); ***A63F 13/285*** (2014.09);

(Continued)

(58) **Field of Classification Search**
CPC A63F 13/213; A63F 13/24; A63F 13/285; A63F 2300/1043; A63F 2300/1087; A63F 2300/1056; A63F 2300/6045; A63F 2300/8076
USPC 463/37
See application file for complete search history.

(56) **References Cited**

U.S. PATENT DOCUMENTS

3,454,920 A 7/1969 Mehr
3,474,241 A 10/1969 Kuipers

(Continued)

FOREIGN PATENT DOCUMENTS

CN 1338961 3/2002
CN 1559644 1/2005

(Continued)

OTHER PUBLICATIONS

Notice of Reasons for Rejection issued Oct. 27, 2008 in corresponding Japanese Application No. 2007-203785.

(Continued)

Primary Examiner — Michael Cuff
(74) *Attorney, Agent, or Firm* — Nixon & Vanderhye, P.C.

(57) **ABSTRACT**

A first control unit includes a first operation data generation section for generating first operation data in accordance with a motion of a first control unit body included in the first control unit. A second control unit includes a second operation data generation section for generating second operation data in accordance with a direction input operation performed by a player or a motion of a second control unit body included in the second control unit. Further, one of the first control unit and the second control unit includes a transmission section for transmitting the first operation data and the second operation data to a computer at a predetermined timing.

30 Claims, 21 Drawing Sheets

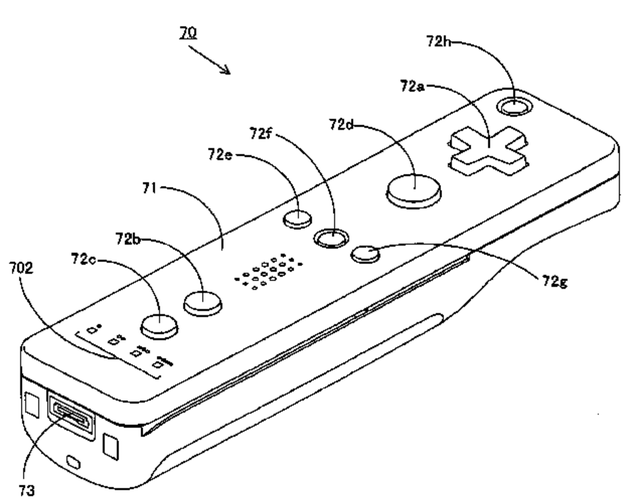

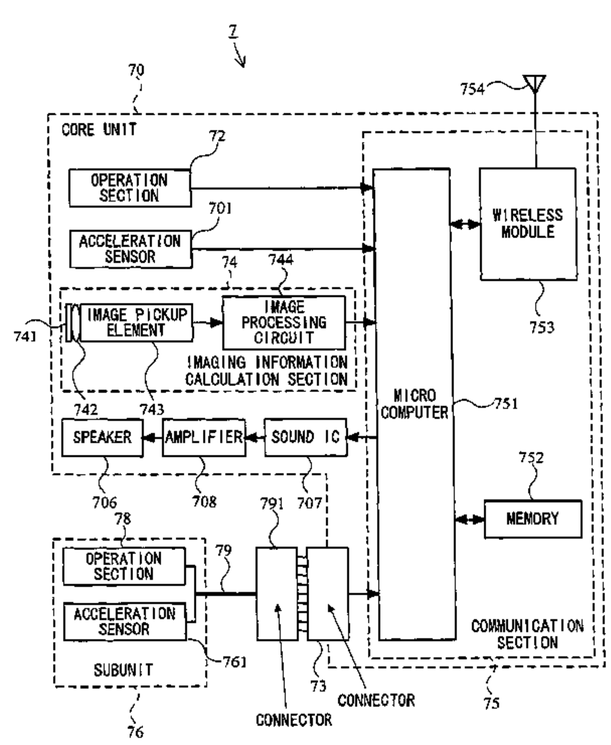

Related U.S. Application Data

11/504,086, filed on Aug. 15, 2006, now Pat. No. 8,267,786, which is a continuation-in-part of application No. 11/404,871, filed on Apr. 17, 2006, now Pat. No. 8,870,655.

(60) Provisional application No. 60/714,862, filed on Sep. 8, 2005.

(51) **Int. Cl.**
A63F 13/211 (2014.01)
A63F 13/24 (2014.01)
A63F 13/285 (2014.01)

(52) **U.S. Cl.**
CPC .. *A63F 2300/105* (2013.01); *A63F 2300/1006* (2013.01); *A63F 2300/1025* (2013.01); *A63F 2300/1031* (2013.01); *A63F 2300/1037* (2013.01); *A63F 2300/1043* (2013.01); *A63F 2300/1068* (2013.01); *A63F 2300/1087* (2013.01); *A63F 2300/6045* (2013.01); *A63F 2300/8076* (2013.01)

(56) **References Cited**

U.S. PATENT DOCUMENTS

D220,268 S 3/1971 Kliewer
3,660,648 A 5/1972 Kuipers
3,973,257 A 8/1976 Rowe
4,009,619 A 3/1977 Snyman
4,038,876 A 8/1977 Morris
4,166,406 A 9/1979 Maughmer
4,240,638 A 12/1980 Morrison et al.
4,287,765 A 9/1981 Kreft
4,303,978 A 12/1981 Shaw et al.
4,318,245 A 3/1982 Stowell et al.
4,321,678 A 3/1982 Krogmann
4,337,948 A 7/1982 Breslow
4,342,985 A 8/1982 Desjardins
4,402,250 A 9/1983 Baasch
4,425,488 A 1/1984 Moskin
4,443,866 A 4/1984 Burgiss, Sr.
4,450,325 A 5/1984 Luque
4,503,299 A 3/1985 Henrard
4,514,600 A 4/1985 Lentz
4,514,798 A 4/1985 Lesche
4,540,176 A 9/1985 Baer
4,546,551 A 10/1985 Franks
4,558,604 A 12/1985 Auer
4,561,299 A 12/1985 Orlando et al.
4,578,674 A 3/1986 Baker et al.
4,623,930 A 11/1986 Oshima et al.
4,672,374 A 6/1987 Desjardins
4,739,128 A 4/1988 Grisham
4,761,540 A 8/1988 McGeorge
4,787,051 A 11/1988 Olson
4,816,810 A 3/1989 Moore
4,839,838 A 6/1989 LaBiche et al.
4,849,655 A 7/1989 Bennett
4,851,685 A 7/1989 Dubgen
4,862,165 A 8/1989 Gent
4,914,598 A 4/1990 Krogmann et al.
4,918,293 A 4/1990 McGeorge
4,957,291 A 9/1990 Miffitt et al.
4,961,369 A 10/1990 McGill
4,969,647 A 11/1990 Mical et al.
4,988,981 A 1/1991 Zimmerman et al.
4,994,795 A 2/1991 MacKenzie
5,045,843 A 9/1991 Hansen
D320,624 S 10/1991 Taylor
5,059,958 A 10/1991 Jacobs et al.
5,062,696 A 11/1991 Oshima et al.
5,068,645 A 11/1991 Drumm
D322,242 S 12/1991 Cordell
D325,225 S 4/1992 Adhida
5,124,938 A 6/1992 Algrain
5,128,671 A 7/1992 Thomas, Jr.
D328,463 S 8/1992 King et al.
5,136,222 A 8/1992 Yamamoto
5,138,154 A 8/1992 Hotelling
D331,058 S 11/1992 Morales
5,175,481 A 12/1992 Kanno
5,178,477 A 1/1993 Gambaro
5,181,181 A 1/1993 Glynn
5,192,082 A 3/1993 Inoue et al.
5,202,844 A 4/1993 Kamio et al.
5,207,426 A 5/1993 Inoue et al.
D338,242 S 8/1993 Cordell
D340,042 S 10/1993 Copper et al.
5,259,626 A 11/1993 Ho
5,262,777 A 11/1993 Low et al.
D342,256 S 12/1993 Payne
5,280,744 A 1/1994 DeCarlo et al.
D345,164 S 3/1994 Grae
5,296,871 A 3/1994 Paley
5,307,325 A 4/1994 Scheiber
5,317,394 A 5/1994 Hale et al.
5,329,276 A 7/1994 Hirabayashi
5,332,322 A 7/1994 Gambaro
5,339,095 A 8/1994 Redford
D350,736 S 9/1994 Takahashi et al.
D350,782 S 9/1994 Barr
D351,430 S 10/1994 Barr
5,357,267 A 10/1994 Inoue
5,359,321 A 10/1994 Ribic
5,359,348 A 10/1994 Pilcher et al.
5,363,120 A 11/1994 Drumm
5,369,580 A 11/1994 Monji et al.
H1383 H 12/1994 Kaplan et al.
5,369,889 A 12/1994 Callaghan
5,373,857 A 12/1994 Travers et al.
5,396,265 A 3/1995 Ulrich et al.
5,421,590 A 6/1995 Robbins
5,430,435 A 7/1995 Hoch et al.
D360,903 S 8/1995 Barr et al.
5,440,326 A 8/1995 Quinn
5,453,758 A 9/1995 Sato
D362,870 S 10/1995 Oikawa
5,459,489 A 10/1995 Redford
5,469,194 A 11/1995 Clark et al.
5,481,957 A 1/1996 Paley et al.
5,484,355 A 1/1996 King, II et al.
5,485,171 A 1/1996 Copper et al.
5,490,058 A 2/1996 Yamasaki et al.
5,502,486 A 3/1996 Ueda et al.
5,506,605 A * 4/1996 Paley 345/163
5,512,892 A 4/1996 Corballis et al.
5,517,183 A 5/1996 Bozeman, Jr.
5,523,800 A 6/1996 Dudek
5,526,022 A 6/1996 Donahue et al.
5,528,265 A 6/1996 Harrison
5,531,443 A 7/1996 Cruz
5,541,860 A 7/1996 Takei et al.
5,551,701 A 9/1996 Bouton et al.
5,554,033 A 9/1996 Bizzi
5,554,980 A * 9/1996 Hashimoto et al. 345/158
5,561,543 A * 10/1996 Ogawa 398/107
5,563,628 A 10/1996 Stroop
5,569,085 A 10/1996 Igarashi et al.
D375,326 S 11/1996 Yokoi et al.
5,573,011 A 11/1996 Felsing
5,574,479 A 11/1996 Odell
5,579,025 A 11/1996 Itoh
D376,826 S 12/1996 Ashida
5,587,558 A 12/1996 Matsushima
5,594,465 A 1/1997 Poulachon
5,598,187 A 1/1997 Ide et al.
5,602,569 A 2/1997 Kato
5,603,658 A 2/1997 Cohen
5,605,505 A 2/1997 Han
5,606,343 A 2/1997 Tsuboyama et al.
5,611,731 A 3/1997 Bouton et al.
5,615,132 A 3/1997 Horton et al.

(56) **References Cited**

U.S. PATENT DOCUMENTS

5,621,459	A	4/1997	Ueda et al.	
5,624,117	A	4/1997	Ohkubo et al.	
5,627,565	A	5/1997	Morishita et al.	
D379,832	S	6/1997	Ashida	
5,640,152	A	6/1997	Copper	
5,641,288	A	6/1997	Zaenglein, Jr.	
5,643,087	A	7/1997	Marcus et al.	
5,645,077	A	7/1997	Foxlin et al.	
5,645,277	A	7/1997	Cheng	
5,666,138	A	9/1997	Culver	
5,667,220	A	9/1997	Cheng	
5,670,845	A	9/1997	Grant et al.	
5,670,988	A	9/1997	Tickle	
5,676,673	A	10/1997	Ferre et al.	
5,679,004	A *	10/1997	McGowan et al.	434/247
5,682,181	A	10/1997	Nguyen et al.	
5,698,784	A	12/1997	Hotelling et al.	
5,701,131	A	12/1997	Kuga	
5,702,305	A	12/1997	Norman et al.	
5,703,623	A	12/1997	Hall et al.	
5,724,106	A	3/1998	Autry et al.	
5,726,675	A	3/1998	Inoue	
5,734,371	A	3/1998	Kaplan	
5,734,373	A	3/1998	Rosenberg et al.	
5,734,807	A	3/1998	Sumi	
D393,884	S	4/1998	Hayami	
5,736,970	A	4/1998	Bozeman, Jr.	
5,739,811	A	4/1998	Rosenberg et al.	
5,741,182	A	4/1998	Lipps et al.	
5,742,331	A	4/1998	Uomori et al.	
5,745,226	A	4/1998	Gigioli, Jr.	
1,394,264	A	5/1998	Sakamoto et al.	
5,746,602	A	5/1998	Kikinis	
5,751,273	A	5/1998	Cohen	
5,752,880	A	5/1998	Gabai et al.	
5,757,354	A	5/1998	Kawamura	
5,757,360	A	5/1998	Nitta et al.	
D395,464	S	6/1998	Shiibashi et al.	
5,764,224	A	6/1998	Lilja et al.	
5,769,719	A	6/1998	Hsu	
5,771,038	A	6/1998	Wang	
D396,468	S	7/1998	Schindler et al.	
5,785,317	A	7/1998	Sasaki	
D397,162	S	8/1998	Yokoi et al.	
5,794,081	A	8/1998	Itoh et al.	
5,796,354	A	8/1998	Cartabiano et al.	
5,796,387	A	8/1998	Curran et al.	
5,805,256	A	9/1998	Miller	
5,807,284	A	9/1998	Foxlin	
5,819,206	A	10/1998	Horton	
5,820,462	A	10/1998	Yokoi et al.	
5,822,713	A	10/1998	Profeta	
5,825,350	A	10/1998	Case, Jr. et al.	
D400,885	S	11/1998	Goto	
5,831,553	A	11/1998	Lenssen et al.	
5,835,077	A	11/1998	Dao	
5,835,156	A	11/1998	Blonstein et al.	
5,841,409	A	11/1998	Ishibashi et al.	
D402,328	S	12/1998	Ashida	
5,847,854	A	12/1998	Benson, Jr.	
5,850,624	A	12/1998	Gard et al.	
5,854,622	A	12/1998	Brannon	
D405,071	S	2/1999	Gambaro	
5,867,146	A	2/1999	Kim et al.	
5,874,941	A	2/1999	Yamada	
5,875,257	A	2/1999	Marrin et al.	
D407,071	S	3/1999	Keating	
D407,761	S	4/1999	Barr	
5,897,437	A	4/1999	Nishiumi et al.	
5,898,421	A	4/1999	Quinn	
5,900,867	A	5/1999	Schindler et al.	
5,902,968	A	5/1999	Sato et al.	
D410,909	S	6/1999	Tickle	
5,912,612	A	6/1999	DeVolpi	
5,919,149	A	7/1999	Allum	
5,923,317	A	7/1999	Sayler et al.	
5,926,780	A	7/1999	Fox et al.	
5,929,782	A	7/1999	Stark et al.	
D412,940	S	8/1999	Kato	
5,947,868	A	9/1999	Dugan	
5,955,713	A	9/1999	Titus et al.	
5,955,988	A	9/1999	Blonstein et al.	
5,956,035	A	9/1999	Scianmanella et al.	
5,967,898	A	10/1999	Takasaka et al.	
5,973,757	A	10/1999	Aubuchon et al.	
5,982,352	A	11/1999	Pryor	
5,982,356	A	11/1999	Akiyama	
5,984,785	A	11/1999	Takeda	
5,986,644	A	11/1999	Herder et al.	
5,991,085	A	11/1999	Rallison et al.	
5,999,168	A	12/1999	Rosenberg et al.	
6,002,394	A	12/1999	Schein et al.	
D419,199	S	1/2000	Cordell et al.	
D419,200	S	1/2000	Ashida	
6,010,406	A	1/2000	Kajikawa et al.	
6,011,526	A	1/2000	Toyoshima et al.	
6,012,980	A	1/2000	Yoshida et al.	
6,013,007	A	1/2000	Root et al.	
6,016,144	A	1/2000	Blonstein et al.	
6,019,680	A	2/2000	Cheng	
6,020,876	A	2/2000	Rosenberg et al.	
6,037,882	A	3/2000	Levy	
6,044,297	A	3/2000	Sheldon et al.	
6,049,823	A	4/2000	Hwang	
6,052,083	A	4/2000	Wilson	
6,057,788	A *	5/2000	Cummings	341/22
6,058,342	A	5/2000	Orbach et al.	
6,059,576	A	5/2000	Brann	
6,069,594	A	5/2000	Barnes et al.	
6,072,467	A	6/2000	Walker	
6,072,470	A	6/2000	Ishigaki	
6,075,575	A	6/2000	Schein et al.	
6,081,819	A	6/2000	Ogino	
6,084,315	A	7/2000	Schmitt	
6,084,577	A	7/2000	Sato et al.	
6,087,950	A	7/2000	Capan	
D429,718	S	8/2000	Rudolph	
6,110,039	A	8/2000	Oh	
6,115,028	A	9/2000	Balakrishnan	
6,137,457	A	10/2000	Tokuhashi et al.	
D433,381	S	11/2000	Talesfore	
6,146,278	A	11/2000	Kobayashi	
6,148,100	A	11/2000	Anderson et al.	
6,155,926	A	12/2000	Miyamoto et al.	
6,160,405	A	12/2000	Needle et al.	
6,160,540	A	12/2000	Fishkin et al.	
6,162,191	A	12/2000	Foxlin	
6,164,808	A	12/2000	Shibata et al.	
6,171,190	B1	1/2001	Thanasack et al.	
6,176,837	B1	1/2001	Foxlin	
6,181,329	B1	1/2001	Stork et al.	
6,183,365	B1	2/2001	Tonomura et al.	
6,184,862	B1	2/2001	Leiper	
6,184,863	B1	2/2001	Silbert et al.	
6,186,896	B1	2/2001	Takeda et al.	
6,191,774	B1	2/2001	Schena et al.	
6,198,295	B1	3/2001	Hill	
6,198,470	B1	3/2001	Agam et al.	
6,198,471	B1	3/2001	Cook	
6,200,219	B1	3/2001	Rudell et al.	
6,200,253	B1	3/2001	Nishiumi et al.	
6,201,554	B1	3/2001	Lands	
6,211,861	B1	4/2001	Rosenberg et al.	
6,217,450	B1	4/2001	Meredith	
6,217,478	B1	4/2001	Vohmann et al.	
D442,998	S	5/2001	Ashida	
6,225,987	B1	5/2001	Matsuda	
6,226,534	B1 *	5/2001	Aizawa	455/566
6,238,291	B1	5/2001	Fujimoto et al.	
6,239,806	B1	5/2001	Nishiumi et al.	
6,241,611	B1	6/2001	Takeda et al.	
6,243,658	B1	6/2001	Raby	
6,244,987	B1	6/2001	Oshuga et al.	
6,245,014	B1 *	6/2001	Brainard, II	600/300

(56) **References Cited**

U.S. PATENT DOCUMENTS

6,251,011	B1	6/2001	Yamazaki
6,264,558	B1	7/2001	Nishiumi et al.
6,273,819	B1	8/2001	Strauss et al.
6,280,327	B1	8/2001	Leifer et al.
6,287,198	B1	9/2001	McCauley
6,297,751	B1	10/2001	Fadavi-Ardekani
6,301,534	B1	10/2001	McDermott, Jr. et al.
6,304,250	B1	10/2001	Yang et al.
6,315,673	B1	11/2001	Kopera et al.
6,323,614	B1	11/2001	Palazzolo et al.
6,323,654	B1	11/2001	Needle et al.
6,325,718	B1	12/2001	Nishiumi et al.
6,331,841	B1	12/2001	Tokuhashi et al.
6,331,856	B1	12/2001	Van Hook et al.
6,337,954	B1	1/2002	Soshi et al.
6,347,998	B1	2/2002	Yoshitomi et al.
6,361,507	B1	3/2002	Foxlin
D456,410	S	4/2002	Ashida
6,369,794	B1	4/2002	Sakurai et al.
6,375,572	B1	4/2002	Masuyama et al.
6,377,793	B1	4/2002	Jenkins
6,377,906	B1	4/2002	Rowe
D456,854	S	5/2002	Ashida
6,383,079	B1	5/2002	Takeda et al.
6,392,613	B1	5/2002	Goto
6,394,904	B1	5/2002	Stalker
D458,972	S	6/2002	Ashida
6,400,480	B1	6/2002	Thomas
6,400,996	B1	6/2002	Hoffberg et al.
6,409,687	B1	6/2002	Foxlin
D459,727	S	7/2002	Ashida
D460,787	S	7/2002	Nishikawa
6,415,223	B1	7/2002	Lin et al.
6,421,056	B1	7/2002	Nishiumi et al.
6,424,333	B1	7/2002	Tremblay
6,426,719	B1	7/2002	Nagareda et al.
6,426,741	B1	7/2002	Goldsmith et al.
D462,683	S	9/2002	Ashida
6,452,494	B1	9/2002	Harrison
6,456,276	B1	9/2002	Park
D464,053	S	10/2002	Zicolello
D464,950	S	10/2002	Fraquelli
6,466,198	B1	10/2002	Feinstein
6,466,831	B1	10/2002	Shibata et al.
6,473,070	B2	10/2002	Mishra et al.
6,473,713	B1	10/2002	McCall et al.
6,474,159	B1	11/2002	Foxlin et al.
6,484,080	B2	11/2002	Breed
6,492,981	B1	12/2002	Stork et al.
6,496,122	B2	12/2002	Sampsell
6,518,952	B1	2/2003	Leiper
6,530,838	B2 *	3/2003	Ha et al. 463/36
6,538,637	B1 *	3/2003	Kor 345/156
6,538,675	B2	3/2003	Aratani et al.
D473,942	S	4/2003	Motoki et al.
6,540,607	B2	4/2003	Mokris et al.
6,540,611	B1	4/2003	Nagata
6,544,124	B2	4/2003	Ireland et al.
6,544,126	B2	4/2003	Sawano et al.
6,545,661	B1	4/2003	Goschy et al.
6,549,191	B2	4/2003	Leman
6,554,781	B1	4/2003	Carter et al.
D474,763	S	5/2003	Tozaki et al.
6,565,444	B2	5/2003	Nagata et al.
6,567,071	B1	5/2003	Curran et al.
6,567,536	B2	5/2003	McNitt et al.
6,572,108	B1	6/2003	Bristow
6,577,350	B1	6/2003	Proehl et al.
6,582,299	B1	6/2003	Matsuyama et al.
6,582,380	B2	6/2003	Kazlausky et al.
6,585,596	B1	7/2003	Leifer
6,590,536	B1	7/2003	Walton
6,591,677	B2	7/2003	Rothoff
6,597,342	B1	7/2003	Haruta
6,597,443	B2	7/2003	Boman
6,599,194	B1	7/2003	Smith et al.
6,605,038	B1	8/2003	Teller et al.
6,608,563	B2	8/2003	Weston et al.
6,609,977	B1	8/2003	Shimizu et al.
6,616,607	B2	9/2003	Hashimoto et al.
6,628,257	B1	9/2003	Oka et al.
6,634,949	B1	10/2003	Briggs et al.
6,636,826	B1	10/2003	Abe et al.
6,650,029	B1	11/2003	Johnston
6,650,313	B2	11/2003	Levine et al.
6,650,345	B1	11/2003	Saito et al.
6,654,001	B1	11/2003	Su
6,672,962	B1	1/2004	Ozaki et al.
6,676,520	B2	1/2004	Nishiumi
6,677,990	B1	1/2004	Kawahara
6,681,629	B2	1/2004	Foxlin et al.
6,682,351	B1	1/2004	Abraham-Fuchs et al.
6,684,062	B1 *	1/2004	Gosior et al. 455/73
D486,145	S	2/2004	Kaminski et al.
6,686,954	B1	2/2004	Kitaguchi et al.
6,692,170	B2	2/2004	Abir
6,693,622	B1	2/2004	Shahoian et al.
6,712,692	B2	3/2004	Basson et al.
6,717,573	B1 *	4/2004	Shahoian et al. 345/161
6,718,280	B2	4/2004	Hermann
6,724,366	B2	4/2004	Crawford
6,725,173	B2	4/2004	An et al.
D489,361	S	5/2004	Mori et al.
6,736,009	B1	5/2004	Schwabe
D491,924	S	6/2004	Kaminski et al.
D492,285	S	6/2004	Ombao et al.
6,743,104	B1	6/2004	Ota et al.
6,747,632	B2	6/2004	Howard
6,747,690	B2	6/2004	Mølgaard
6,749,432	B2	6/2004	French et al.
6,752,719	B2	6/2004	Himoto et al.
6,753,849	B1	6/2004	Curran et al.
6,753,888	B2	6/2004	Kamiwada et al.
6,757,068	B2	6/2004	Foxlin
6,757,446	B1	6/2004	Li et al.
6,761,637	B2	7/2004	Weston et al.
6,765,553	B1	7/2004	Odamura
D495,336	S	8/2004	Andre et al.
6,786,877	B2	9/2004	Foxlin
6,796,177	B2	9/2004	Mori
6,811,489	B1	11/2004	Shimizu et al.
6,811,491	B1	11/2004	Levenberg et al.
6,812,881	B1	11/2004	Mullaly et al.
6,813,525	B2	11/2004	Reid et al.
6,813,584	B2	11/2004	Zhou et al.
6,816,151	B2	11/2004	Dellinger
6,821,204	B2	11/2004	Aonuma et al.
6,821,206	B1	11/2004	Ishida et al.
6,836,705	B2	12/2004	Hellmann et al.
6,836,751	B2	12/2004	Paxton et al.
6,836,971	B1	1/2005	Wan
6,842,991	B2	1/2005	Levi et al.
6,850,221	B1	2/2005	Tickle
6,850,844	B1	2/2005	Walters et al.
6,852,032	B2	2/2005	Ishino
6,856,327	B2	2/2005	Choi
D502,468	S	3/2005	Knight et al.
6,868,738	B2	3/2005	Moscrip et al.
6,872,139	B2	3/2005	Sato et al.
6,873,406	B1	3/2005	Hines et al.
D503,750	S	4/2005	Kit et al.
D504,677	S	5/2005	Kaminski et al.
D505,424	S	5/2005	Ashida et al.
6,897,845	B2	5/2005	Ozawa
6,897,854	B2	5/2005	Cho et al.
6,906,700	B1	6/2005	Armstrong
6,908,388	B2	6/2005	Shimizu et al.
6,922,632	B2	7/2005	Foxlin
6,925,410	B2	8/2005	Narayanan
6,929,543	B1	8/2005	Ueshima et al.
6,929,548	B2	8/2005	Wang
6,933,861	B2	8/2005	Wang
6,933,923	B2	8/2005	Feinstein
6,954,980	B2	10/2005	Song

(56) **References Cited**

U.S. PATENT DOCUMENTS

6,955,606 B2 10/2005 Taho et al.
6,956,564 B1 10/2005 Williams
6,967,566 B2 11/2005 Weston et al.
6,982,697 B2 1/2006 Wilson et al.
6,984,208 B2 1/2006 Zheng
6,990,639 B2 1/2006 Wilson
6,993,451 B2 1/2006 Chang et al.
6,995,748 B2 2/2006 Gordon et al.
6,998,966 B2 2/2006 Pedersen et al.
7,000,469 B2 2/2006 Foxlin et al.
7,002,591 B1 2/2006 Leather et al.
7,031,875 B2 4/2006 Ellenby et al.
7,066,781 B2 6/2006 Weston
D524,298 S 7/2006 Hedderich et al.
7,081,051 B2 7/2006 Himoto et al.
7,090,582 B2 8/2006 Danieli et al.
7,098,891 B1 8/2006 Pryor
7,098,894 B2 8/2006 Yang et al.
7,102,616 B1 9/2006 Sleator
7,107,168 B2 9/2006 Oystol et al.
D531,228 S 10/2006 Ashida et al.
7,115,032 B2 10/2006 Cantu et al.
7,126,584 B1 10/2006 Nishiumi et al.
7,127,370 B2 10/2006 Kelly et al.
D531,585 S 11/2006 Weitgasser et al.
7,133,026 B2 11/2006 Horie et al.
7,136,674 B2 11/2006 Yoshie et al.
7,139,983 B2 11/2006 Kelts
7,140,962 B2 11/2006 Okuda et al.
7,142,191 B2 11/2006 Idesawa et al.
7,145,551 B1 12/2006 Bathiche et al.
7,149,627 B2 12/2006 Ockerse et al.
7,154,475 B2 12/2006 Crew
7,155,604 B2 12/2006 Kawai
7,158,118 B2 1/2007 Liberty
7,173,604 B2 * 2/2007 Marvit et al. 345/156
7,176,919 B2 2/2007 Drebin et al.
7,182,691 B1 2/2007 Schena
7,183,480 B2 2/2007 Nishitani et al.
7,184,059 B1 2/2007 Fouladi et al.
D543,246 S 5/2007 Ashida et al.
7,220,220 B2 5/2007 Stubbs et al.
7,225,101 B2 5/2007 Usuda et al.
7,231,063 B2 6/2007 Naimark et al.
7,233,316 B2 6/2007 Smith et al.
7,236,156 B2 6/2007 Liberty et al.
7,239,301 B2 7/2007 Liberty et al.
7,261,690 B2 8/2007 Teller et al.
7,262,760 B2 8/2007 Liberty
D556,201 S 11/2007 Ashida et al.
7,292,151 B2 11/2007 Ferguson et al.
7,301,527 B2 11/2007 Marvit
7,301,648 B2 11/2007 Foxlin
D556,760 S 12/2007 Ashida et al.
D559,847 S 1/2008 Ashida et al.
D561,178 S 2/2008 Azuma
7,335,134 B1 2/2008 LaVelle
D563,948 S 3/2008 d'Hore
D567,243 S 4/2008 Ashida et al.
7,351,148 B1 4/2008 Rothschild et al.
7,359,121 B2 4/2008 French et al.
RE40,324 E 5/2008 Crawford
7,372,450 B2 5/2008 Twerdahl et al.
7,379,566 B2 5/2008 Hildreth
7,395,181 B2 7/2008 Foxlin
7,414,611 B2 8/2008 Liberty
7,445,550 B2 11/2008 Barney et al.
7,488,231 B2 2/2009 Weston
7,500,917 B2 3/2009 Barney et al.
7,568,289 B2 8/2009 Burlingham et al.
7,582,016 B2 9/2009 Suzuki
7,614,958 B2 11/2009 Weston et al.
7,663,509 B2 2/2010 Shen
7,774,155 B2 8/2010 Sato et al.
7,775,882 B2 8/2010 Kawamura et al.
7,796,116 B2 9/2010 Salsman
2001/0008847 A1 7/2001 Miyamoto et al.
2001/0010514 A1 8/2001 Ishino
2001/0015123 A1 8/2001 Nishitani et al.
2001/0024973 A1 9/2001 Meredith
2001/0031662 A1 10/2001 Larian
2001/0049302 A1 12/2001 Hagiwara et al.
2002/0024500 A1 2/2002 Howard
2002/0024675 A1 2/2002 Foxlin
2002/0028071 A1 3/2002 Mølgaard
2002/0072418 A1 6/2002 Masuyama et al.
2002/0075335 A1 6/2002 Rekimoto
2002/0098887 A1 7/2002 Himoto et al.
2002/0103026 A1 8/2002 Himoto et al.
2002/0107069 A1 8/2002 Ishino
2002/0126026 A1 9/2002 Lee
2002/0137567 A1 9/2002 Cheng
2002/0140745 A1 10/2002 Ellenby et al.
2002/0158843 A1 10/2002 Levine et al.
2002/0167696 A1 * 11/2002 Edwards et al. 359/142
2002/0183961 A1 12/2002 French et al.
2003/0038778 A1 2/2003 Noguera et al.
2003/0052860 A1 3/2003 Park et al.
2003/0057808 A1 3/2003 Lee et al.
2003/0063068 A1 4/2003 Anton et al.
2003/0069077 A1 4/2003 Korienek
2003/0100347 A1 * 5/2003 Okada et al. A63F 13/10 455/567
2003/0107551 A1 6/2003 Dunker
2003/0134665 A1 * 7/2003 Kato A63F 13/00 455/566
2003/0144056 A1 7/2003 Leifer et al.
2003/0193572 A1 10/2003 Wilson et al.
2003/0195041 A1 10/2003 McCauley
2003/0204361 A1 10/2003 Townsend et al.
2003/0216176 A1 11/2003 Shimizu et al.
2003/0222851 A1 12/2003 Lai et al.
2004/0028258 A1 2/2004 Naimark et al.
2004/0034289 A1 2/2004 Teller et al.
2004/0048666 A1 3/2004 Bagley
2004/0070564 A1 4/2004 Dawson
2004/0075650 A1 4/2004 Paul et al.
2004/0095317 A1 5/2004 Zhang et al.
2004/0134341 A1 7/2004 Sandoz et al.
2004/0140954 A1 7/2004 Faeth
2004/0143413 A1 7/2004 Oystol et al.
2004/0147317 A1 7/2004 Ito et al.
2004/0152515 A1 8/2004 Wegmuller et al.
2004/0193413 A1 9/2004 Wilson et al.
2004/0203638 A1 10/2004 Chan
2004/0204240 A1 10/2004 Barney
2004/0218104 A1 11/2004 Smith et al.
2004/0222965 A1 11/2004 Riccomini et al.
2004/0222967 A1 11/2004 Riccomini et al.
2004/0222969 A1 11/2004 Buchenrieder
2004/0227725 A1 11/2004 Calarco et al.
2004/0229693 A1 11/2004 Lind et al.
2004/0239626 A1 12/2004 Noguera
2004/0252109 A1 12/2004 Trent et al.
2004/0254020 A1 12/2004 Dragusin
2004/0259651 A1 12/2004 Storek
2004/0268393 A1 12/2004 Hunleth et al.
2005/0017454 A1 1/2005 Endo et al.
2005/0020369 A1 1/2005 Davis et al.
2005/0032582 A1 2/2005 Mahajan
2005/0047621 A1 3/2005 Cranfill
2005/0054457 A1 3/2005 Eyestone et al.
2005/0070359 A1 3/2005 Rodriquez et al.
2005/0076161 A1 4/2005 Albanna et al.
2005/0085298 A1 4/2005 Woolston
2005/0107160 A1 5/2005 Cheng et al.
2005/0124413 A1 6/2005 Ueshima
2005/0125826 A1 6/2005 Hunleth et al.
2005/0130739 A1 6/2005 Argentar
2005/0134555 A1 6/2005 Liao
2005/0143173 A1 6/2005 Barney et al.
2005/0172734 A1 8/2005 Alsio
2005/0174324 A1 8/2005 Liberty et al.
2005/0176485 A1 8/2005 Ueshima

(56) **References Cited**

U.S. PATENT DOCUMENTS

2005/0179644	A1	8/2005	Alsio
2005/0210419	A1	9/2005	Kela
2005/0212749	A1	9/2005	Marvit
2005/0212750	A1	9/2005	Marvit
2005/0212751	A1	9/2005	Marvit
2005/0212752	A1	9/2005	Marvit
2005/0212754	A1	9/2005	Marvit
2005/0212755	A1	9/2005	Marvit
2005/0212756	A1	9/2005	Marvit
2005/0212757	A1	9/2005	Marvit
2005/0212758	A1	9/2005	Marvit
2005/0212759	A1	9/2005	Marvit
2005/0212760	A1	9/2005	Marvit
2005/0212764	A1	9/2005	Toba
2005/0212767	A1	9/2005	Marvit et al.
2005/0215295	A1	9/2005	Arneson
2005/0215322	A1	9/2005	Himoto et al.
2005/0217525	A1	10/2005	McClure
2005/0233808	A1	10/2005	Himoto et al.
2005/0239548	A1	10/2005	Ueshima et al.
2005/0243061	A1	11/2005	Liberty et al.
2005/0243062	A1	11/2005	Liberty
2005/0253806	A1	11/2005	Liberty et al.
2005/0256675	A1	11/2005	Kurata
2006/0028446	A1	2/2006	Liberty et al.
2006/0030385	A1	2/2006	Barnet et al.
2006/0046849	A1	3/2006	Kovacs
2006/0092133	A1	5/2006	Touma et al.
2006/0094502	A1	5/2006	Katayama et al.
2006/0105842	A1	5/2006	Kim et al.
2006/0122474	A1	6/2006	Teller et al.
2006/0123146	A1	6/2006	Wu et al.
2006/0148563	A1	7/2006	Yang
2006/0152487	A1	7/2006	Grunnet-Jepsen et al.
2006/0152488	A1	7/2006	Salsman et al.
2006/0152489	A1	7/2006	Sweetser et al.
2006/0154726	A1	7/2006	Weston et al.
2006/0170889	A1	8/2006	Lum et al.
2006/0178212	A1	8/2006	Penzias
2006/0205507	A1	9/2006	Ho
2006/0212753	A1	9/2006	Marvit
2006/0231794	A1	10/2006	Sakaguchi et al.
2006/0252477	A1	11/2006	Zalewski et al.
2006/0256081	A1	11/2006	Zalewski et al.
2006/0258452	A1	11/2006	Hsu
2006/0262910	A1 *	11/2006	Molnar G06K 9/00469 379/88.17
2006/0264258	A1	11/2006	Zalewski et al.
2006/0264260	A1	11/2006	Zalewski et al.
2006/0282873	A1	12/2006	Zalewski et al.
2006/0287086	A1	12/2006	Zalewski et al.
2006/0287087	A1	12/2006	Zalewski et al.
2007/0015588	A1	1/2007	Matsumoto et al.
2007/0021208	A1	1/2007	Mao et al.
2007/0049374	A1	3/2007	Ikeda et al.
2007/0052177	A1	3/2007	Ikeda et al.
2007/0066396	A1	3/2007	Weston et al.
2007/0072680	A1	3/2007	Ikeda
2007/0091084	A1	4/2007	Ueshima et al.
2007/0093291	A1	4/2007	Hulvey
2007/0159362	A1	7/2007	Shen
2007/0173705	A1	7/2007	Teller et al.
2007/0197290	A1	8/2007	Ueshima
2007/0252815	A1	11/2007	Kuo et al.
2007/0265075	A1	11/2007	Zalewski
2007/0265076	A1	11/2007	Lin et al.
2007/0265088	A1	11/2007	Nakada et al.
2008/0014835	A1	1/2008	Weston et al.
2008/0121782	A1	5/2008	Hotelling et al.
2008/0273011	A1	11/2008	Lin
2008/0278445	A1	11/2008	Sweetser et al.
2008/0280660	A1	11/2008	Ueshima et al.
2009/0051653	A1	2/2009	Barney et al.
2009/0156309	A1	6/2009	Weston

FOREIGN PATENT DOCUMENTS

DE	3930581	3/1991
DE	19701344	7/1997
DE	19701374	7/1997
DE	19648487	6/1998
DE	19814254	10/1998
DE	19937307	2/2000
DE	10029173	1/2002
DE	10241392	5/2003
DE	10219198	11/2003
EP	0835676	4/1998
EP	0848226	6/1998
EP	0 852 961	7/1998
EP	0 852961	7/1998
EP	1 062 994	12/2000
EP	1 062994	12/2000
EP	1 279 425	1/2003
EP	1 293 237	3/2003
EP	1 293237	3/2003
EP	0993845	12/2005
EP	1854518	10/2010
GB	1524334	9/1978
GB	2 244 546	5/1990
GB	2244546	5/1990
GB	2284478	6/1995
GB	2307133	5/1997
GB	2316482	2/1998
GB	2319374	5/1998
JP	60-077231	5/1985
JP	62-14527	1/1987
JP	3-74434	7/1991
JP	03-08103	8/1991
JP	3-059619	11/1991
JP	04-287888	10/1992
JP	5-056191	7/1993
JP	5-56191	7/1993
JP	2-901476	12/1993
JP	6-50758	2/1994
JP	3-262677	5/1994
JP	6-154422	6/1994
JP	6-190144	7/1994
JP	6-198075	7/1994
JP	3-194841	10/1994
JP	06-077387	10/1994
JP	3-273531	11/1994
JP	6-308879	11/1994
JP	3-228845	1/1995
JP	7-28591	1/1995
JP	7-44315	2/1995
JP	7044315	2/1995
JP	7-107573	4/1995
JP	7-115690	5/1995
JP	3-517482	6/1995
JP	7-14612	6/1995
JP	7-200142	8/1995
JP	07-262797	10/1995
JP	7-302148	11/1995
JP	7-318332	12/1995
JP	08-045392	2/1996
JP	8-071252	3/1996
JP	8-71252	3/1996
JP	8-095704	4/1996
JP	8-106352	4/1996
JP	08-111144	4/1996
JP	8-114415	5/1996
JP	8-122070	5/1996
JP	8-152959	6/1996
JP	8-211993	8/1996
JP	08-221187	8/1996
JP	8-305355	11/1996
JP	8-335136	12/1996
JP	9-230997	9/1997
JP	9-274534	10/1997
JP	9-319510	12/1997
JP	10-02100	1/1998
JP	10-033831	2/1998
JP	10-99542	4/1998
JP	10-154038	6/1998

(56) **References Cited**

FOREIGN PATENT DOCUMENTS

JP	10-254614	9/1998
JP	11-099284	4/1999
JP	11-114223	4/1999
JP	11-506857	6/1999
JP	2000-270237	9/2000
JP	2000-308756	11/2000
JP	2001-038052	2/2001
JP	2001-104643	4/2001
JP	3078268	4/2001
JP	2001-175412	6/2001
JP	2001-251324	9/2001
JP	2001-306245	11/2001
JP	2002-062981	2/2002
JP	2002-082751	3/2002
JP	2002-091692	3/2002
JP	2002-153673	5/2002
JP	2002-202843	7/2002
JP	2002-224444	8/2002
JP	2002-232549	8/2002
JP	2002-233665	8/2002
JP	2003-053038	2/2003
JP	34-22383	4/2003
JP	2003-140823	5/2003
JP	2003-208263	7/2003
JP	2003-236246	8/2003
JP	2003-325974	11/2003
JP	2004-062774	2/2004
JP	2004-313429	11/2004
JP	2004-313492	11/2004
JP	2005-021458	1/2005
JP	2005-040493	2/2005
JP	2005-063230	3/2005
JP	2006-113019	4/2006
JP	2002-136694	6/2006
JP	2006-436694	6/2006
JP	2006-216569	4/2007
JP	2007-083024	4/2007
JP	2007-283134	11/2007
NL	9300171	8/1994
RU	2125853	2/1999
RU	2126161	2/1999
RU	2141738	11/1999
WO	94/02931	2/1994
WO	96/05766	2/1996
WO	97/09101	3/1997
WO	97/12337	4/1997
WO	97/17598	5/1997
WO	97/28864	8/1997
WO	97/03264	9/1997
WO	98/11528	3/1998
WO	99/58214	11/1999
WO	00/33168	6/2000
WO	00/35345	6/2000
WO	00/47108	8/2000
WO	00/63874	10/2000
WO	WO 00/63874	10/2000
WO	01/87426	11/2001
WO	01/91042	11/2001
WO	02/17054	2/2002
WO	02/74054	2/2002
WO	02/34345	5/2002
WO	03/015005	2/2003
WO	03/107260	6/2003
WO	03/088147	10/2003
WO	2004/039055	5/2004
WO	2004/051391	6/2004

OTHER PUBLICATIONS

Office Action issued Mar. 18, 2009 in co-pending U.S. Appl. No. 11/404,871.

Office Action dated Sep. 18, 2009, issued in corresponding Chinese Application No. 200610111559.7 with an at least partial English-language translation thereof.

Office Action (2 pgs.) dated Sep. 9, 2010 issued in corresponding Japanese Application No. 2008-256858.

Brief of BigBen dated Oct. 27, 2010.

Translation of the Brief of BigBen dated Oct. 27, 2010.

Brief of System Comm 99 dated Oct. 27, 2010.

Translation of the Brief of System Comm 99 dated Oct. 27, 2010.

Translation of Exhibit B-B01: cancellation request of BigBen of Oct. 15, 2010 against German utility model 20 2006 020 818 (UM1).

Translation of Exhibit B-C01: cancellation request of BigBen of Oct. 15, 2010 against German utility model 20 2006 020 819 (UM2).

Translation of Exhibit B-D01: cancellation request of BigBen of Oct. 15, 2010 against German utility model 20 2006 020 820 (UM3).

Search Report (10 pgs.) dated Feb. 4, 2011 issued in corresponding European Application No. 10178309.0-1241.

Office Action (1 pg.) dated Apr. 22, 2011 issued in corresponding Japanese Application No. 2008-256858.

European Office Action issued for European Patent Application No. 10178309.0-1241, dated Oct. 25, 2012.

Notice of Allowance issued for U.S. Appl. No. 12/191,521, dated Dec. 7, 2012.

Office Action dated Aug. 5, 2013 issued in U.S. Appl. No. 1/285,812.

Office Action dated Nov. 21, 2013, issued in U.S. Appl. No. 12/285,812.

Notice of Allowance and Fees Due dated Apr. 15, 2014 issued in U.S. Appl. No. 12/285,812.

English Abstract for Japanese Patent No. JP10021000, published Jan. 23, 1998.

English Abstract for Japanese Patent No. JP11053994, published Feb. 26, 1999.

English Abstract for Japanese Patent No. JP11099284, published Apr. 13, 1999.

English Abstract for Japanese Patent No. JP2001038052, published Feb. 13, 2001.

English Abstract for Japanese Patent No. JP2002224444, published Aug. 13, 2002.

English Abstract for Japanese Patent. No. JP2006136694, published Jun. 1, 2006.

English Abstract for Japanese Patent No. WO9732641, published Sep. 12, 1997.

Acar, "Robust Micromachined Vibratory Gyroscopes" Dissertation (Dec. 4).

Acar, et al., "Experimental evaluation and comparative analysis of commercial variable-capacitance MEMS accelerometers," *Journal of Micromechanics and Microengineering*, vol. 13 (1), pp. 634-645 (May 2003).

Achenbach, "Golf's New Measuring Stick," Golfweek, Jun. 11, 2005, 1 page.

Act Labs: Miaconiet Background, 1 page, May 1999, http://www.act-labs.com/realfeel_background/htm.

Agard, Agard, "Advances in Strapdown Inertial Systems," Lecture Series Advisory Group for Aerospace Research and Development Neuilly-Sur-Seine (France) (1984).

Albrecht, "An Adaptive Digital Filter to Predict Pilot Head Look Direction for Helmet-mounted Displays," MS Thesis University of Dayton (1989).

Algrain, "Estimation of 3-D Angular Motion Using Gyroscopes and Linear Accelerometers," IEEE Transactions on Aerospace and Electronic Systems, vol. 27, No. 6, pp. 910-920 (Nov. 1991).

Algrain, et al., "Accelerometer Based Line-of-Sight Stabilization Approach for Pointing and Tracking System," Second IEEE Conference on Control Applications, vol. 1 , Issue 13-16 pp. 159-163 (Sep. 1993).

Algrain, et al., "Interlaced Kalman Filtering of 3-D Angular Motion Based on Euler's Nonlinear Equations," IEEE Transactions on Aerospace and Electronic Systems, vol. 30, No. 1 (Jan. 1994).

Allen, et al., "A General Method for Comparing the Expected Performance of Tracking and Motion Capture Systems," {VRST} '05: Proceedings of the ACM symposium on Virtual reality software and technology, pp. 201-210 (Nov. 2005).

Allen, et al., "Tracking: Beyond 15 Minutes of Thought," SIGGRAPH 2001 Course 11 (Course Pack) from Computer Graphics (2001).

(56) **References Cited**

OTHER PUBLICATIONS

Alves, "Extended Kalman filtering applied to a full accelerometer strapdown inertial measurement unit," M.S. Thesis Massachusetts Institute of Technology. Dept. of Aeronautics and Astronautics, Santiago (1992).
Analog Devices "ADXL202E Low-Cost ±2 g Dual-Axis Accelerometer with Duty Cycle Output" (Data Sheet), Rev. A (2000).
Analog Devices "ADXL330 Small, Low Power, 3-Axis ±2 g iMEMS Accelerometer" (Data Sheet), Rev. PrA (2005).
Analog Devices "ADXL50 Single Axis Accelerometer" (Data Sheet), http://www.analog.com/en/obsolete/adx150/products/product.html (Mar. 1996).
Analog Devices "ADXRS150 ±150° /s Single Chip Yaw Rate Gyro with Signal Conditioning" (Data Sheet), Rev. B (2004).
Analog Devices "ADXRS40 I ±75° /s Single Chip Yaw Rate Gyro with Signal Conditioning" (Data Sheet), Rev. O (2004).
Ang, et al., "Design and Implementation of Active Error Canceling in Hand-held Microsurgical Instrument," Proceedings of the 2001 IEEE/RSJ International Conference on Intelligent Robots and Systems, vol. 2, (Oct. 2001).
Ang, et al., "Design of All-Accelerometer Inertial Measurement Unit for Tremor Sensing in Hand-held Microsurgical Instrument," Proceedings of the 2003 IEEE International Conference on Robotics & Automation (Sep. 2003).
Apostolyuk, Vladislav, "Theory and design of micromechanical vibratory gyroscopes," MEMS/NEMS Handbook, Springer, 2006, vol. 1, pp. 173-195 (2006).
Arcanatech, "IMP User's Guide" (1994).
Arcanatech, IMP (Photos) (1994).
Ascension Technology, The Bird 6D Input Devices (specification) (1998).
"ASCII Grip One Handed Controller," One Switch-ASCII Grip One Handed Playstation Controller, http://www.oneswitch.org.uk/1/ascii/grip.htm, Jul. 11, 2008, pp. 1-2.
"ASCII Grip" One-Handed Controller The Ultimate One-Handed Controller Designed for the Playstation Game Console (ASCII Entertainment 1997).
"ASCII/Sammy Grip V2," One Switch-Accessible Gaming Shots-ASCII Grip V2, http://www.oneswitch.org.uk/1/AGS/AGS-onehand/ascii-grip-v2.html, Jul. 10, 2008, pp. 1-2.
Asciistick, picture of one-handed controller, 2 pages (Feb. 6, 2006).
Ashida et al., entitled, "Game Controller," U.S. Appl. No. 11/790,780, filed Apr. 27, 2007, pending.
"At-home fishing" 1 page, Dec. 1996-1999.
Ator, "Image-Velocity with Parallel-Slit Reticles," Journal of the Optical Society of America (Dec. 1963).
Azarbayejani, et al, "Real-Time 3-D Tracking of the Human Body," Proceedings of IMAGE'COM 96 (1996).
Azarbayejani, et al., "Visually Controlled Graphics," IEEE Transactions on Pattern Analysis and Machine Intelligence, vol. 15, No. 6, pp. 602-605 (Jun. 1993).
Azuma et al., "Improving Static and Dynamic Registration in an Optical See-Through HMD," International Conference on Computer Graphics and Interactive Techniques Proceedings of the 21st annual conference on Computer graphics and interactive techniques, pp. 197-204 (1994).
Azuma et al., "Making Augmented Reality Work Outdoors Requires Hybrid Tracking, "Proceedings of the International Workshop on Augmented Reality, San Francisco, CA, Nov. 1, 1998, Bellevue, Washington, pp. 219-224 (1999).
Azuma, "Predictive Tracking for Augmented Reality," Ph.D. Dissertation, University of North Carolina at Chapel Hill (1995).
Azuma, et al., "A Frequency-Domain Analysis of Head-Motion Prediction," Proceedings of SIGGRAPH '94, pp. 401-408 (1995).
Azuma, et al., "A motion-stabilized outdoor augmented reality system," Proceedings of IEEE Virtual Reality '99, Houston, TX (Mar. 1999).
Bachmann et al., "Inertial and Magnetic Posture Tracking for Inserting Humans into Networked Virtual Environments," Virtual Reality Software and Technology archive, Proceedings of the ACM Symposium on Virtual Reality Software and Technology, Baniff, Alberta, Canada, pp. 9-16 (2001).
Bachmann et al., "Orientation Tracking for Humans and Robots Using inertial Sensors" (CIRA '99), Naval Postgraduate School, Monterey, CA (1999).
Bachmann, "Inertial and Magnetic Angle Tracking of Limb Segments for Inserting Humans into Synthetic Environments," Dissertation, Naval Postgraduate School, Monterey, CA (Dec. 2000).
Baker et al., "Active Multimodal Control of a Floppy Telescope Structure," Proc. SPIE, vol. 4825, 74 (Mar. 2003).
Balakrishnan, "The Rockin Mouse: Integral 3D Manipulation on a Plane," (CHI '97), Univ. Toronto, (1997).
Ballagas, et al., Jan, "iStuff: A Physical User Interface Toolkit for Ubiquitous Computer Environments," Proceedings of the SIGCHI Conference on Human Factors in Computing Systems, vol. 5, No. 1, at 537-544 (ACM) (Apr. 5-10, 2003).
Baraff, "An Introduction to Physically Based Modeling," SIGGRAPH 97 Course Notes (1997).
Bass Fishing "Legends of the Lake", Radica 2 pages, 2002.
Baudisch, et al., "Soap: a pointing device that works in mid-air" Proc. UIST (2006).
BBN Report, "Virtual Environment Technology for Training (VETT)," The Virtual Environment and Teleoperator Research Consortium (VETREC) (Mar. 1992).
Behringer, "Improving Registration Precision Through Visual Horizon Silhouette Matching," Proceedings of the international workshop on Augmented reality : placing artificial objects in real scenes: placing artificial objects in real scenes, Bellevue, Washington, United States pp. 225-232 (1999).
Behringer, "Registration for Outdoor Augmented Reality Applications Using Computer Vision Techniques and Hybrid Sensors," Virtual Reality, 1999 Proceedings., IEEE Computer Society, pp. 244-261 (1999).
BEI Systron Donner Inertial Division, Gyrochip Theory of Operation (2001).
BEI, "BEI GyrochipTM Model QRS11 Data Sheet," BEI Systron Donner Inertial Division, BEI Technologies, Inc., (Sep. 1998).
Benbasat, "An Inertial Measurement Unit for User Interfaces," Massachusetts Institute of Technology Dissertation, (Sep. 2000).
Benbasat, et al., "An Inertial Measurement Framework for Gesture Recognition and Applications," Gesture and Sign Language in Human-Computer Interaction, International Gesture Workshop, GW 2001, London, UK, 2001 Proceedings, LNAI 2298, at 9-20, I. Wachsmuth and T. Sowa (eds.), Springer-Verlag Heibelberg (2001, 2002).
Beuter, A., Publications, University of Quebec at Montreal, http://ww.er.uqam.ca/nobel/r11040/publicat.htm (Aug. 2007).
BGM-109 Tomahawk, http://en.wikipedia.org/wiki/BGM-109_Tomahawk, Wikipedia, Jan. 2009.
Bhatnagar, "Position trackers for Head Mounted Display systems: A survey" (Technical Report), University of North Carolina at Chapel Hill (Mar. 1993).
Bianchi, "A Tailless Mouse, New cordless Computer Mouse Invented by ArcanaTech." Inc. Article (Jun. 1992).
Bishop, "The Self-Tracker: A Smart Optical Sensor on Silicon," Ph.D. Dissertation, Univ. of North Carolina at Chapel Hill (1984).
Bishop, et al., "Grids Progress Meeting" (Slides), University of North Carolina at Chapel Hill, NC (1998).
Bishop, et al., Self-Tracker: Tracking for Hybrid Environments without Infrastructure (1996).
Bona, et al., "Optimum Reset of Ship's Inertial Navigation System," IEEE Transactions on Aerospace and Electronic Systems (1965).
Borenstein, et al., "Where am I? Sensors and Methods for Mobile Robot Positioning" (1996).
Boser, "3-Axis Accelerometer with Differential Sense Electronics," http://www.eecs.berkeley.edu/~boser/pdf/3axis.pdf (1997).
Boser, "Accelerometer Design Example: Analog, Devices XL-05/5," http://www.eecs.berkeley.edu/~boser/pdf/x105.pdf (1996).
Bowman et al., 3D User Interfaces; Theory and Practice. Addison-Wesley, Inc., (2005).
Bowman,. et al., "An introduction to 3-D User Interface Design," MIT Presence, vol. 10, No. 1, pp. 96-108 (2001).

(56) **References Cited**

OTHER PUBLICATIONS

Briefs (New & Improved) (Brief Article), PC Magazine, Oct. 26, 1993.
Britton et al., "Making Nested rotations Convenient for the User," ACM SIGGRAPH Computer Graphics, vol. 12, Issue 3, pp. 222-227 (Aug. 1978).
Britton, "A Methodology for the Ergonomic Design of Interactive Computer Graphic Systems, and its Application to Crystallography" (UNC Thesis) (1977).
Business Wire, "Feature/Virtual reality glasses that interface to Sega channel," Time Warner, TCI: project announced concourrent with COMDEX (Nov. 1994).
Business Wire, "Free-space 'Tilt' Game Controller for Sony Playstation Uses Scenix Chip; SX Series IC Processes Spatial Data in Real Time for On-Screen" (Dec. 1999).
Business Wire, "InterSense Inc. Launches InertiaCube2—The World's Smallest Precision Orientation Sensor With Serial Interface" (Aug. 14, 2001).
Business Wire, "Logitech Magellan 3D Controller," Logitech (Apr. 1997).
Business Wire, "Mind Path Introduces GYROPOINT RF Wireless Remote" (Jan. 2000).
Business Wire, "Pegasus' Wireless PenCell Writes on Thin Air with ART's Handwriting Recognition Solutions," Business Editors/High Tech Writers Telecom Israel 2000 Hall 29, Booth 19-20 (Nov. 2000).
Business Wire, "RPI ships low-cost pro HMD Plus 3D Mouse and VR PC graphics card system for CES" (Jan. 1995).
Buxton, Bill, "Human input/output devices," In M. Katz (ed.), Technology Forecast: 1995, Menlo Park, C.A.: Price Waterhouse World Firm Technology Center, 49-65 (1994).
Buxton, Bill, A Directory of Sources for Input Technologies, http://www.billbuxton.com/InputSources.html, Apr. 2001 (last update 2008).
Byte, "Imp Coexists With Your Mouse," What's New, ArcanaTec (Jan. 1994).
Canaday, R67-26 "The Lincoln Wand," IEEE Transactions on Electronic Computers, vol. EC-16, No. 2, p. 240 (Apr. 1967).
Caruso et al., "New Perspective on Magnetic Field Sensing," Sensors Magazine (Dec. 1998).
Caruso et al., "Vehicle Detection and Compass Applications using AMR Magnetic Sensors," Honeywell (May 1999).
Caruso, "Application of Magnetoresistive Sensors in Navigation Systems," Sensors and Actuators, SAE SP-1220, pp. 15-21 (Feb. 1997).
Caruso, "Applications of Magnetic Sensors for Low Cost Compass Systems," Honeywell, SSEC, http://www.ssec.honeywell.com/magnetic/datasheets/lowcost.pdf (May 1999).
Chatfield, "Fundamentals of High Accuracy Inertial Navigation," vol. 174 Progress in Astronautics and Aeronautics, American Institute of Aeronautics and Astronautics, Inc. (1997).
Cheng, "Direct interaction with large-scale display systems using infrared laser tracking devices," ACM International Conference Proceeding Series; vol. 142 (2003).
Cho, et al., "*Magic Wand*: A Hand-Drawn Gesture Input Device in 3-D Space with Inertial Sensors," Proceedings of the 9th Intl Workshop on Frontiers in Handwriting Recognition (IWFHR-9 2004), IEEE 2004).
CNET News.com, http://news.com.com/2300-1043_3-6070295-2.html?tag=ne.gall.pg, "Nintendo Wii Swings Into Action," May 25, 2006, 1pg.
"Coleco Vision: Super Action™ Controller Set," www.vintagecomputing.com/wp-content/images/retroscan/coleco_sac_1_large.jpg.
Computer Mouse (Wikipedia) Jul. 5, 2005).
"Controllers—Atari Space Age Joystick," AtariAge: Have You Played Atari Today?www.atariage.com/controller_page.html?SystemID=2600&ControllerID=12.
"Controllers—Booster Grip," AtariAge: Have You Played Atari Today?www.atariage.com/controller_page.html?SystemID=2600&ControllerID=18.
Computergram, "RPI Entertainment Pods Improve Virtual Experience" (1995).
Cookbook, Numerical Recipes Electronic Edition, http://www.library.cornell.edu/nr/cbookcpdf.html.
Cooke, et al., "NPSNET: flight simulation dynamic modeling using quaternions," Presence, vol. 1, No, 4,pp. 404-420, MIT Press (1992/1994).
CSIDC Winners—Tablet-PC Classroom System Wins Design Competition, IEEE Computer Society Press, vol. 36 , Issue 8, pp. 15-18 , IEEE Computer Society (Aug. 2003).
Cutrone, "Hot products: Gyration GyroPoint Desk, GyroPoint Pro gyroscope-controlled wired and wireless mice" (Computer Reseller News) (Dec. 1995).
Cutts, "A Hybrid Image/Inertial System for Wide-Area Tracking" (Internal to UNC-CH Computer Science) (Jun. 1999).
Cyberglove/Cyberforce, Immersion, Cyberforce CyberGlove Systems, "Immersion Ships New Wireless CyberGlove(R) II Hand Motion-Capture Glove; Animators, Designers, and Researchers Gain Enhanced Efficiency and Realism for Animation, Digital Prototyping and Virtual Reality Projects," Business Wire, Dec. 7, 2005.
Deruyck, et al., "An Electromagnetic Position Sensor," Polhemus Navigation Sciences, Inc. Burlington, VT (Nov. 1973).
Dichtburn, "Camera in Direct3D" Toymaker, Mar. 5, 2005, 5 pages, http://web.archive.org/web/20050206032104/http://toymaker.info/games/html/camera.html.
Donelson, et al., "Spatial Management of Information" (1978).
Eiβele, "Orientation as an additional User Interface in Mixed-Reality Environments," 1. workshop Ervwiterte und Virtuelle Realität, pp. 79-90. GI-Fachgruppe AR/VR (2007).
Electro-Plankton Weblog, http://www.tranism.com/weblog/2005/09/. "This is the Revolution, Nintendo Style," Sep. 15, 2005, 2 pgs.
"Electronic Plastic: BANDAI—Power Fishing", "Power Fishing Company: BANDAI", 1984, 1 page, http:/www.handhelden.com/Bandai/PowerFishing.html.
Emura, et al., "Sensor Fusion Based Measurement of Human Head Motion," 3rd IEEE international Workshop on Robot and Human Communication (Jul. 1994).
European Search Report for Application No. EP 07 11 2880, Oct. 18, 2007, in Munich.
Ewalt, David M., "Nintendo's Wii is a Revolution," Review, Forbes.Com (Nov. 13, 2006).
Ferrin, "Survey of Helmet Tracking Technologies," Proc. SPIE vol. 1456, p. 86-94 (Apr. 1991).
Fishing Games: The Evolution of Virtual Fishing Games and related Video Games/Computer Games, 15 pages, 2003.
Foley et al., "Computer Graphics: Principles and Practice," Second Edition, 1990.
Foremski, T. "Remote Control Mouse Aims at Interactive TV", Electronics Weekly, Mar. 9, 1994.
Foxlin IS-900 Motion Tracking System, Technical Overview, 10 pages, intersense.com, 1999.
Foxlin et al., "An Inertial Head-Orientation Tracker with Automatic Drift Compensation for Use with HMD's," Proceedings of the conference on Virtual reality software and technology, Singapore, Singapore, pp. 159-173 (1994).
Foxlin et al., "Miniature 6-DOF Inertial System for Tracking HMDs," SPIE vol. 3362 (Apr. 1998).
Foxlin et al., "Miniaturization, Calibration & Accuracy Evaluation of a Hybrid Self-Tracker," The Second IEEE and ACM International Symposium on Mixed and Augmented Reality, pp. 151-160 (2003).
Foxlin et al., "WearTrack: A Self-Referenced Head and Hand Tracker for Wearable Computers and Portable VR," International Symposium on Wearable Computers (ISWC 2000), Oct. 16-18, 2000, Atlanta, GA (2000).
Foxlin, "FlightTracker: A Novel Optical/Inertial Tracker for Cockpit Enhanced Vision, Symposium on Mixed and Augmented Reality," Proceedings of the 3rd IEEE/ACM International Symposium on Mixed and Augmented Reality, pp. 212-221 (Nov. 2004).
Foxlin, "Generalized architecture for simultaneous localization, auto-calibration, and map-building," IEEE/RSJ Conf. on Intelligent Robots and Systems, Lausanne, Switzerland (Oct. 2002).
Foxlin, "Head-tracking Relative to a Moving Vehicle or Simulator Platform Using Differential Inertial Sensors," InterSense, Inc., Pre-

(56) **References Cited**

OTHER PUBLICATIONS

sented: Helmet and Head-Mounted Displays V, SPIE vol. 4021, AeroSense Symposium, Orlando, FL, Apr. 24-25, 2000.
Foxlin, "Inertial Head Tracker Sensor Fusion by a Complementary Separate-bias Kalman Filter," Proceedings of the IEEE 1996 Virtual Reality Annual International Symposium, pp. 185-194, 267 (1996).
Foxlin, "Inertial Head-Tracking," MS Thesis, Massachusetts Institute of Technology, Dept. of Electrical Engineering and Computer Science (Sept. 1993).
Foxlin, "Motion Tracking Requirements and Technologies," Chapter 7, from Handbook of Virtual Environment Technology, Stanney Kay, Ed. (2002).
Foxlin, "Pedestrian Tracking with Shoe-Mounted Inertial Sensors," IEEE Computer Graphics and Applications, vol. 25, No. 6, pp. 38-46 (Nov. 2005).
Foxlin, et al., "Constellation: A Wide-Range Wireless Motion-Tracking System for Augmented Reality and Virtual Set Applications," ACM SIGGRAPH, pp. 372-378 (1998).
Foxlin, et al., "VIS-Tracker: A Wearable Vision-Inertial Self-Tracker," IEEE Computer Society (2003).
Frankie, "E3 2002: Roll O Rama", IGN: Roll-o-Rama Preview, . 3 pages. E3 Demo of Kirby game ("Roll O Rama"), http://cube.ign.com/objects/482/482164.html, (May 23, 2002).
Freiburg Center for Data Analysis and Modeling—Publications, http://www.fdm.uni-freiburg.de/cms/puplications/publications/ (Aug. 2007).
Friedmann, et al., "Device Synchronization Using an Optimal Linear Filter," SI3D '92: Proceedings of the 1992 symposium on Interactive 3D graphics, pp. 57-62 (1992).
Friedmann, et al., "Synchronization in virtual realities," MIT Presence, vol. 1, No. 1, pp. 139-144 (1992).
Fröhlich, "The Yo Yo: An interaction device combining elastic and isotonic control," at http://www.uni-weimar.de/cms/medien/vr/research/hci/3d-handheld-interaction/the-yoyo-a-handheld-device-combining-elastic-and-isotonic-input.html (2003).
FrontSide Field Test, "Get This!", Golf Magazine, Jun. 2005, p. 36.
Fuchs, "Intertial Head-Tracking," Massachusetts Institute of Technology, Sep. 1993.
"Game Controller" Wikipedia, Aug. 19, 2005, 7 pages, http://en.wikipedia.org/w/index.php?title=Game_controller&oldid=21390758.
"Game Controller" Wikipedia, Jan. 5, 2005.
Geen et al., New iMEMS Angular-Rate-Sensing Gyroscope.
Gelmis, J,: "Ready to Play, The Future Way", Jul. 23, 1996, Buffalo News.
"Get Bass", Videogame by Sega (1998), The International Arcade Museum and the KLOV, 1998, 4 pages.
"Glove-based input interfaces", Cyberglove/Cyberforce, Jun. 1991, 12 pages, http://www.angelfire.com/ca7/me1lott124/glove1.htm.
Goschy, "Midway Velocity Controller" (youtube video http://www.youtube.com/watch?v=wjLhSrSxFNw) (Sep. 8, 2007).
Grewal et al., "Global Positioning Systems, Inertial Navigation and Integration," 2001.
Grimm et al., "Real-Time Hybrid Pose Estimation from Vision and Inertial Data," Proceedings, First Canadian Conference on Computer and Robot Vision, pp. 480-486 (2004).
Gyration Inc., "The Magic Inside GyroPoint".
Gyration Ultra Cordless Optical Mouse, Setting Up Ultra Mouse, Gyration Quick Start Card part No. DL00071-0001 Rev. A. Gyration, Inc. (Jun. 2003).
Gyration Ultra Cordless Optical Mouse, User Manual, 1-15, Gyration, Inc., Saratoga, CA (2003).
Gyration, "Gyration GP110 Ultra Cordless Optical Mouse. Data Sheet," http://www.gyration.com/descriptions/document/GP110-SPEC-EN.pdf (2002).
Gyration, "Gyration GP110 Ultra Cordless Optical Mouse User Manual," http://www.gyration.com/descriptions/document/GP110-MANUAL-EN.pdf (2002).
Gyration, "Gyration MicroGyro 100 Developer Kit Data Sheet," http://web.archive.org/web/19980708122611/www.gyration.com/html/devkit.html (Jul. 1998).
Gyration, "Gyration Ultra Cordless Optical Mouse," photos (2002).
Hamilton Institute. http://www.dcs.gla.ac.uk/.about.rod/, R. Murray-Smith (Aug. 2007).
Harada, et al., "Portable Absolute Orientation Estimation Device with Wireless Network under Accelerated Situation" Proceedings, 2004 IEEE International Conference on Robotics and Automation, vol. 2, Issue , Apr. 26-May 1, 2004 pp. 1412-1417 vol. 2 (Apr. 2004).
Harada, et al., "Portable orientation estimation device based on accelerometers, magnetometers and gyroscope sensors for sensor network," Proceedings of IEEE International Conference on Multisensor Fusion and Integration for Intelligent Systems, MFI2003, pp. 191-196 (Jul. 2003).
Hartley, Matt, "Why is the Nintendo Wii So Successful?", Smarthouse—The Lifestyle Technology Guide Website (Sep. 12, 2007).
Haykin, et al., "Adaptive Tracking of Linear Time-Variant Systems by Extended RLS Algorithms, IEEE Transactions on Signal Processing," vol. 45, No. 5 (May 1997).
Heath, "Virtual Reality Resource Guide AI Expert," v9 n5 p32(14) (May 1994).
HiBall-3100—"Wide-Area, High-Precision Tracker and 3D Digitizer," www.3rdtech.com/HiBall.htm 4 pages.
Hinckley, Ken, "Haptic Issues for Virtual Manipulation," Thesis (Dec. 1996).
Hinckley et al., "The VideoMouse: A Camera-Based Multi-Degree-of-Freedom Input Device" A59, ACM UIST'99 Symposium on User Interface Software & Technology. CHI Letters 1 (1), pp. 103-112. (Jan. 1999).
Hinckley, "Synchronous Gestures for Multiple Persons and Computers", CHI Letters vol. 5 No. 2 (ACM 2003) & Proceedings of the 16th Annual ACM UIST 2003 Symposium on User Interface Software & Technology, at 149-58 (UIST'03 Vancouver BC Canada) (ACM) (Nov. 2003).
Hinckley, et al., "Sensing Techniques for Mobile Interaction," Proceedings of the 13th Annual Acm Symposium on User Interface Software and Technology (San Diego, Cal.), ACM UIST 2000 & Technology, CHI Letters 2 (2), at 91-100 (ACM 2000).
Hinckley, Ken, et al., "The VideoMouse: A Camera-Based Multi-Degree-of-Freedom Input Device," CHI Letters vol. 1, 1, UIST'99, Asheville, NC, pp. 103-112 (1999).
Hinckley. et al. , "A Survey of Design Issues in Spatial Input," Proceedings of the ACM Symposium on User Interface Software and Technology (1994).
Hogue, "Marvin: A Mobile Automatic Realtime Visual and INertial tracking system," Master's Thesis, York University (2003).
Hogue, et al., "An optical-inertial tracking system for fully-enclosed VR displays," Proceedings of the 1st Canadian Conference on Computer and Robot Vision, pp. 22-29 (May 2004).
Hollands, Robin, "Sourceless Trackers," VR News (Apr. 1995).
Holloway, Richard Lee, "Registration Errors in Augmented Reality Systems," Ph.D. Dissertation, University of North Carolina at Chapel Hill (1995).
Hudson Soft, "Brochure of Toukon Road Brave Warrior, Brave Spirits" (1998).
Ikeda et al., entitled, "Game Operating Device," U.S. Appl. No. 11/446,187, filed Jun. 5, 2006, pending.
Ikeda et al., entitled, "Game Operating Device," U.S. Appl. No, 11/446,188 filed Jun. 5, 2006, pending.
Inman, "Cheap sensors could capture your every move," http://technology.newscientist.com/article/dn12963-cheap-sensors-could-capture-your-every-move.html (Nov. 2007).
Intersense, "InterSense InertiaCube2 Devices," (Specification) (image) (2001).
Intersense, "InterSense InertiaCube2 Manual for Serial Port Model" (2001).
Intersense, InterSense IS 900 Technical Overview—Motion Tracking System, 1999.
Intersense, "InterSense IS-1200 FlightTracker Prototype Demonstration" (Video) (Nov. 2004).
Intersense, "InterSense IS-1200 InertiaHawk Datasheet" (2009).

(56) **References Cited**

OTHER PUBLICATIONS

Intersense, "InterSense IS-1200 VisTracker Datasheet" (2007).
Intersense, "InterSense IS-1200 VisTracker Devices," (image) (2007).
Intersense, "InterSense IS-900 MicroTraxTM Datasheet" (2007).
Intersense, "InterSense IS-900 Systems Datasheet" (2007).
Intersense, "InterSense MicroTrax Demo Reel," http://www,youtube.com/watch?v=O2F4fu_CISo (2007).
Intersense, "InterSense Mobile Mixed Reality Demonstration" (Video), http://www.youtube.com/watch?v=daVdzGK0nUE &feature=channel_page (Oct. 2006).
Intersense, "InterSense Motion Gaming Tech Demo," http://www.youtube.com/watch?v=7-3y5tdju4E, InterSense (Mar. 2008) (Video).
Intersense, "IS-1200 VisTracker Augmented Maintenance Demonstration" (Video), http://www.intersense.com/IS-1200_Systems.aspx, http://www.youtube.com/watch?v=1MI78s91WQo &feature=channel_page (Jan. 2009).
Intersense, "IS-1200 VisTracker Industrial Cart Demonstration" (Video), InterSense http://www.intersense.com/IS-1200_Systems.aspx http://www.youtube.com/watch?v=7xKLCvDGMgY &feature=channel_page (Jan. 2008).
Intersense, "IS-900 Product Technology Brief" http://www.intersense.com/uploaded-Files/Products/White_Papers/IS900_Tech_Overview_Enhanced.pdf (1999).
Intersense, Inc., "Comparison of InterSense IS-900 System and Optical Systems," http://www.intersense.com/uploadedFiles/Products/White_Papers/Comparison%20of%20InterSense%20IS-900%20System%20and%20Optical%20Systems.pdf (Jul. 12, 2004).
Interview with Pat Goschy (youtube video http://www.youtube.com/watch?v=oKtZysYGDLE) (Jan. 14, 2008).
Izumori et al, High School Algebra: Geometry (1986) 高等学校の代数・幾何 改訂版.
Jacob, "Human-Computer Interaction—Input Devices" http//www.cs.tufts.edu/~jacob/papers/surveys.html, "Human-Computer Interaction: Input Devices," ACM Computing Surveys, vol. 28, No. 1, pp. 177-179 (Mar. 1996).
Jakubowsk, et al., "Increasing Effectiveness of Human Hand Tremor Separation Process by Using Higher-Order Statistics," Measurement Science Review, vol. 1 (2001).
Jakubowski, et al., "Higher Order Statistics and Neural Network for Tremor Recognition," IEEE Transactions on Biomedical Engineering, vol. 49, No. 2 (Feb. 2002).
Ji, H. "Study on the Infrared Remote-Control Lamp-Gesture Device", Yingyong Jiguang/Applied Laser Technology, v. 17, n. 5, p. 225-227, Oct. 1997 Language: Chinese-Abstract only.
Jian, et al., "Adaptive Noise Cancellation," Rice University, http://www.ece.rice.ed/.about.klwang/elec434/elec434.htm, (Aug. 2007).
Jiang, "Capacitive position-sensing interface for micromachined inertial sensors," Dissertation at Univ. of Cal. Berkley (2003).
Ju, et al., "The Challenges of Designing a User Interface for Consumer Interactive Television Consumer Electronics Digest of Technical Papers.," IEEE 1994 International Conference on Volume , Issue ,Jun. 21-23, 1994 Page(s):114-115 (Jun. 1994).
Kalawsky, "The Science of Virtual Reality and Virtual Environments,"1993.
Keir, et al., "Gesture-recognition with Non-referenced Tracking," IEEE Symposium on 3D User Interfaces, pp. 151-158 (Mar. 25-26, 2006).
Kennedy, P.J., "Hand-Held Data Input Device," IBM Technical Disclosure Bulletin, vol. 26, No. 11, pp. 5826-5827 (Apr. 1984).
Kessler, et al., "The Simple Virtual Environment Library" (MIT Presence) (2000).
Kindratenko, "A Comparison of the Accuracy of an Electromagnetic and a Hybrid Ultrasound-Inertia Position Tracking System," MIT Presence, vol. 10, No. 6, Dec. 2001, 657-663 (2001).
Klein et al.,"Tightly Integrated Sensor Fusion for Robust Visual Tracking," British Machine Vision Computing, vol. 22, No. 10, pp. 769-776 (2004).
Kohler, "Triumph of the Wii: How Fun Won Out in the Console Wars," www.wired.com/print/gaming/hardware/news/2007/06/wii.
Kohlhase, "NASA Report, The Voyager Neptune travel guide," Jet Propulsion Laboratory Publication 89-24, excerpt (Jun. 1989).
Krumm, et al.,"How a Smart Environment Can Use Perception," Ubicomp 2001 (Sep. 2001).
Kuipers, Jack B., "SPASYN—An Electromagnetic Relative Position and Orientation Tracking System," IEEE Transactions on Instrumentation and Measurement, vol. 29, No. 4, pp. 462-466 (Dec. 1980).
Kunz, Andreas M. et al., "Design and Construction of a New Haptic Interface," Proceedings of DETC'00, ASME 2000 Design Engineering Technical Conferences and Computers and Information in Engineering Conference, Baltimore, Maryland (Sep. 10-13, 2000).
La Scala, et al., "Design of an Extended Kalman Filter Frequency Tracker," IEEE Transactions on Signal Processing, vol. 44, No. 3 (Mar. 1996).
Larimer et al., "VEWL: A Framework for building a Windowing Interface in a Virtual Environment," in Proc. of IFIP TC13 Int. Conf. on Human-Computer Interaction Interact'2003 (Zürich, http://people.cs.vt.edu/~bowman/papers/VEWL_final.pdf (2003).
Laughlin, et al., "Inertial Anoular Rate Sensors: Theory and Applications," SENSORS Magazine (Oct. 1992).
Lee et al., "Tilta-Pointer: the Free-Space Pointing Device," Princeton COS 436 Project, http://www.milvehuang.com/cos436/project/specs.html (2004).
Lee, et al., "Innovative Estimation Method with Measurement Likelihood for all-Accelerometer Type Inertial Navigation System," IEEE Transactions on Aerospace and Electronic Systems, vol. 38, No. 1 (Jan. 2002).
Lee, et al., "Two-Dimensional Position Detection System with MEMS Accelerometer for Mouse Applications" Design Automation Conference, 2001. Proceedings, 2001 pp. 852-857 (Jun. 2001).
Leonard, "Computer Pointer Controls 3D Images in Free Space," Electronic Design, pp. 160, 162, 165 , (Nov. 1991).
Liang, et al., "On Temporal-Spatial Realism in the Virtual Reality Environment," ACM 1991 Symposium on User Interface Software and Technology (Nov. 1991).
Link, "Field-Qualified Silicon Accelerometers From 1 Milli g to 200,000 g," SENSORS (Mar. 1993).
Liu, et al., "Enhanced Fisher Linear Discriminant. Models for Face Recognition," Proc. 14.sup.th International Conference on Pattern Recognition, Queensland, Australia (Aug. 1998).
Lobo et al., "Vision and Inertial Sensor Cooperation Using Gravity as a Vertical Reference," IEEE Trans. on Pattern Analysis and Machine Intelligence, vol. 25, No. 12, pp. 1597-1608 (Dec. 2003).
Logitech, Logitech 2D/6D Mouse Devices Specification (1991).
Logitech, "Logitech 2D/6D Mouse Technical Reference Manual" (1991).
Logitech, "Logitech Tracker—Virtual Reality Motion Tracker." http://www.vrealities.com/logitech.html.
Logitech, Inc., "3D Mouse & Head Tracker Technical Reference Manual" (1992).
Louderback, Jim, "Nintendo Wii," Reviews by PC Magazine, (Nov. 13, 2006).
"LPC2104/2105/2106, Single-chip 32-bit microcontrollers; 128 kB ISP/IAP Flash with 64 kB/32 kB/16 kB RAM", Phillips, Dec. 22, 2004; 32 pages.
Lunge, Inertial sensing of human movement, Thesis, University of Twente (2002).
Lunge, et al., "Estimation of orientation with gyroscopes and accelerometers," Proceedings of the First Joint BMES/EMBS Conference, 1999., vol. 2, p. 844 (Oct. 1999).
Luthi, P. et al., "Low Cost Inertial Navigation System," and translation (2000).
Mackenzie et al., "A two-ball mouse affords three degrees of freedom," Extended Abstracts of the CHI'97 Conference on Human Factors in Computing Systems. pp. 303-304. New York: ACM (1997).

(56) **References Cited**

OTHER PUBLICATIONS

Mackinlay, "Rapid Controlled Movement Through a Virtual 3D Workspace," ACM SIGGRAPH Computer Graphics archive, vol. 24, No. 4, pp. 171-176 (Aug. 1990).
MaClean, "Designing with Haptic Feedback", Proceedings of IEEE Robotics and Automation (ICRA'2000), at 783-788 (Apr. 22-28, 2000).
Maggioni, C., "A novel gestural input device for virtual reality", IEEE Virtual Reality Annual International Symposium (Cat. No. 93CH3336-5), 118-24, 1993.
Markey et al., "The Mechanics of Inertial Position and Heading Indication," Massachusetts Institute of Technology, 1961.
Marti et al., "Biopsy navigator: a smart haptic interface for interventional radiological gestures", International Congress Series, vol. 1256, Jun. 2003, 6 pages.
Marrin, "Possibilities for the Digital Baton as a General-Purpose Gestural interface", Late-Breaking; Short Talks, CHI 97, Mar. 22-27, 1997 (pp. 311-312).
Marti, Gaetan et al., "Biopsy navigator: a smart haptic interface for interventional radiological gestures," Swiss Federal Institute of Technology (EPFL), Lausanne, Switzerland (2003).
Masliah, "Measuring the Allocation of Control in 6 Degree of Freedom Human-Computer Interaction Tasks," Proceedings of he SIGCHI conference on Human factors in computing systems, pp. 25-32 (2001).
Mattel Power Glove Instructions, Licensed by Nintendo for play on Nintendo Entertainment System (1989).
Maybeck, "Stochastic Models, Estimation and Control," vol. 1, Mathematics in Science and Engineering, vol. 141 (1979).
"MEMS enable smart golf clubs" Small Times—MEMS enable smart golf clubs, Jan. 6, 2005, 2 pages.
Merrill, "FiexiGesture: A sensor-rich real-time adaptive gesture and affordance learning platform for electronic music control," Thesis, Massachusetts Institute of Technology (Jun. 2004).
Meyer et al., "A Survey of Position Tracker," vol. 1, Issue 2, pp. 173-200, MIT Presence, (1992).
Microsoft Research Corp., "XWand Devices" (image).
Miles, "New pads lack control," The Times, Dec. 6, 1999.
Mizell, "Using Gravity to Estimate Accelerometer Orientation," IEEE Computer Society (2003).
Morgan, C.; "Still chained to the overhead projector instead of the podium? (TV Interactive Corp's LaserMouse Remote Pro infrared mouse) (Clipboard)(Brief Article) (Product Announcement)", Government Computer News, Jun. 13, 1994.
Morris, "Accelerometry—a technique for the measurement of human body movements," J Biomechanics 6: 729-736 (1973).
Moser, "Low Budget Inertial Navigation Platform (2000)," www.tmoser.ch/typo3/11.0.html. Oct. 2008.
Mulder, "How to Build an Instrumental Glove Based on the Powerglove Flex Sensors," PCVR 16, pp. 10-14 (1994).
Mulder, "Human movement tracking technology," School of Kinesiology, Simon Fraser University (Jul. 1994).
Myers, et al., "Interacting at a Distance: Measuring the Performance of Laser Pointers and Other Devices," CHI 2002, (Apr. 2002).
N.I.C.E., "The N.I.C.E. Project" (video), http://www.niceproject.com/about/ (1997).
Naimark, et al., "Circular Data Matrix Fidueial System and Robust Image Processing for a Wearable Vision-Inertial Self-Tracker," Proceedings International Symposium on Mixed and Augmented Reality, ISMAR (2002).
Naimark, et al., "Encoded LED System for Optical Trackers," Fourth IEEE and ACM International Symposium on Mixed and Augmented Reality, pp. 150-153 (2005).
Navarrete, et al., "Eigenspace-based Recognition of Faces: Comparisons and a new Approach," Image Analysis and Processing (2001).
Newswire PR, "Five New Retailers to Carry Gyration's Gyropoint Point and Gyropoint Pro" (1996).
Newswire PR, "Three-Axis MEMS-based Accelerometer From STMicroelectronics Targets Handheld Terminals," STMicro (Feb. 2003).
Nichols, "Geospatial Registration of Information for Dismounted Soldiers (GRIDS)," Contractor's Progress, Status, and Management Report (Milestone 3 Report to DARPO ETO) (Oct. 1998).
Nintendo, G3 Wireless Controller (Pelican) (2001).
Nintendo, Game Boy Advance SP System (2003).
Nintendo, GameBoy Color (1998)
Nintendo, GameCube Controller (2001).
Nintendo, GameCube System and Controller (2001).
Nintendo, NES Controller (1984).
Nintendo, NES Duck Hunt Game (1984).
Nintendo, Nes System and Controllers (1984).
Nintendo, NES Zapper Guns (1984).
Nintendo, Nintendo 64 Controller (1996).
Nintendo, Nintendo 64 System (N64) (1996).
Nintendo, Nintendo 64 System and Controllers (1996).
Nintendo, Nintendo Entertainment System (NES) (1984).
Nintendo, Nintendo Game Boy Advance (2001).
Nintendo, Nintendo Game Boy Advance System (2001).
Nintendo, Nintendo Game Boy Advance Wireless Adapter (Sep. 26, 2003).
Nintendo, Nintendo Game Boy Color Game Cartridge with Built-In Rumble (Jun. 28, 2009).
Nintendo, Nintendo GameBoy Color System (1998).
Nintendo, Nintendo GameBoy System (1989).
Nintendo, Nintendo GameCube System (2001).
Nintendo, Nintendo N64 Controller with Rumble Pack (1996-1997).
Nintendo, Nintendo N64 Rumble Packs (1996-1997).
Nintendo, Nintendo Super NES (SNES) (1991).
Nintendo, Nintendo: Kirby Tilt & Tumble game, packaging and user manual (Aug. 2000-2001).
Nintendo, Nintendo: WarioWare: Twisted game, packaging and user manual (2004-2005).
Nintendo, Pokemon Pinball (1998).
Nintendo, SNES Superscope (1991).
Nintendo, SNES System & Controllers (1991).
Nintendo, Wavebird Wireless Controllers (May 2002).
Nishiyama, "A Nonlinear Filter for Estimating a Sinusoidal Signal and its Parameters in White Noise: On the Case of a Single Sinusoid," IEEE Transactions on Signal Processing, vol. 45, No, 4 (Apr. 1997).
Nishiyama, "Robust Estimation of a Single Complex Sinusoid in White Noise-H.infin. Filtering Approach," IEEE Transactions on Signal Processing, vol. 47, No. 10 (Oct. 1999).
Odell, "An Optical Pointer for Infrared Remote Controllers," Proceedings of International Conference on Consumer Electronics (1995).
Odell, Transcript of Testimony, Investigation No. 337-TA-658, Before the United States International Trade Commission, vol. IV, redacted (May 14, 2009).
Ogawa et al., "Wii are the Elite," GameSpot web site (Feb. 5, 2008).
Ojeda, et al., "No GPS? No Problem!" University of Michigan Develops Award-Winning Personal Dead-ReackonMg (PDR) System for Walking Users, http://www.engin.umich.edu/research/mrl/urpr/In_Press/P135.pdf (post 2004).
OLPC, "One Laptop Per Child," wiki.laptop.org/go/One_Laptop_per_Child.
Omelyan, "On the numerical integration of motion for rigid polyatainics: The modified quaternion approach" Computers in Physics, vol. 12 No. 1, pp. 97-103 (1998).
Ovaska, "Angular Acceleration Measurement: A Review," Instrumentation and Measurement Technology Conference, Conference Proceedings, IEEE, vol. 2 (Oct. 1998).
PAD—Controller and Memory I/F in Playstation (Apr. 17, 1995; Jan. 12, 2002).
Pai, et al., "The Tango: A Tangible Tangoreceptive Whole-Hand Interface," Proceedings of World Haptics and IEEE Eurohaptics Conference, Symposium on Haptic Interfaces for Virtual Environment and Teleoperator Systems (2005).
Paley, W. Bradford, "Interaction in 3D Graphics," SIGGRAPH Computer Graphics Newsletter, Cricket input device (Nov. 1998).
Paradiso, et al., "Interactive Therapy with Instrumented Footwear," CHI 2004, Apr. 24-29, 2004, Vienna, Austria (2004).
Park, Adaptive control strategies for MEMS gyroscopes (Dissertation), Univ. Cal. Berkley (2000).

(56) **References Cited**

OTHER PUBLICATIONS

PCTracker, Product Technology Brief, at http://www.intersense.com/uploadedFiles/Products/White_Papers/PCTracker_Tech_Overview.pdf.
PC World. "The 20 Most Innovative Products of the Year" (Dec. 27, 2006).
Pelican Accessories G3 Wireless Controller (Sep. 6, 2002).
Phillips, "Forward/Up Directional Incompatibilities During Cursor Placement Within Graphical User Interfaces," Ergonomics, informaworld.com (May 2005).
Phillips, "On the Right Track: A unique optical tracking system gives users greater freedom to explore virtual worlds" (Apr. 2000).
Photographs of prior art ASCII Grip V2 Controller, (cited in previous IDS as: ASCII/Sammy Grip V2 One Switch-Accessible Gaming Shop ASCII Grip V2, http://www.oneswitch.org.uk/1/AGS/AGS-onehand/ascii-grip-v2.html, Jul. 10, 2008, pp. 1-2.).
Pierce et al., "Image Plane Interaction Techniques in 3D Immersive Environments," Proceedings of the 1997 symposium on Interactive 3D graphics, portal.acm.org (1997).
Pilcher, "AirMouse Remote Controls," IEEE Conference on Consumer Electronics (1992).
Pique, "Semantics of Interactive Rotations," Interactive 3D Graphics, Proceedings of the 1986 workshop on Interactive 3D graphics, pp. 259-269 (Oct. 1986).
Piyabongkarn, "Development of a MEMS Gyroscope for Absolute Angle Measurement," IEEE Transactions on Control Systems Technology, vol. 13, Issue 2, pp. 185-195 (Mar. 2005).
Piyabongkarn, "Development of a MEMS Gyroscope for Absolute Angle Measurement," Dissertation, Univ. Minnesota (Nov. 2004).
Polhemus, "Polhemus 3SPACE FASTRAK devices" (image) (2000).
Press Release, "Logitech's Wingman Cordless RumblePad Sets PC Gamers Free," http://www.logitech.com/index.cfm/172/1373 &cl=nz,en (Sep. 2, 2001).
Pryor et al., "A Reusable Software Architecture for Manual Controller Integration," IEEE Conf. on Robotics and Automation, Univ of Texas (Apr. 1997).
Raab, et al., "Magnetic Position and Orientation Tracking System," IEEE Transactions on Aerospace and Electronic Systems, vol. AES-15, No. 5, pp. 709-718 (Sep. 1979).
Raethien, et al., "Tremor Analysis in Two Normal Cohorts," Clinical Neurophysiology 115 (2004).
Rebo, "Helmet-mounted virtual environment display system," Thesis, Air Force Institute of Technology, Defense Technical Information Center (Dec. 1988).
Rebo, et al., "Helmet-Mounted Virtual Environment Display System," Proc. SPIE vol. 1116, pp. 80-84 (Sep. 1989).
Regan, "Smart Golf Clubs", The Baltimore Sun, Jun. 17, 2005, 1 page.
Rekimoto, "Tilting Operations for Small Screen Interfaces," Proceedings of the 9th Annual ACM Symposium on User Interface Software and Technology, pp. 167-168 (1996).
Reunert, "Fiber-Optic Gyroscopes: Principles and Applications," SENSORS, (Aug. 1993).
Ribo, et al., "Hybrid Tracking for Outdoor Augmented Reality Applications," IEEE Computer Graphics and Applications, vol. 22, No. 6, pp. 54-63 (Nov./Dec. 2002).
Riviere, Cameron, Testimony, Trial Day 5, In the Matter of Certain Video Game Machines and Related Three-Dimensional Pointing Devices, ITC Investigation No. 337-TA-658 (May 15, 2009).
Riviere, C., Robotics institute, http://www.ri.cmu.edu/people/riviere.sub.--cameron.html http://www.ri.cmu.edu/person.html?type=publications&person_id=248 (Aug. 2007).
Riviere, et al., "Adaptive Canceling of Physiological Tremor for Improved Precision in Microsurgery," IEEE Transactions on Biomedical Engineering, vol. 45, No. 7 (Jul. 1998).
Riviere, et al., "Toward Active Tremor Canceling in Handheld Microsurgical Instruments," IEEE Transactions on Robotics and Automation, vol. 19, No. 5 (Oct. 2003).
Robbinett et al., "Implementation of Flying, Scaling, and Grabbing in Virtual Worlds," ACM Symposium (1992).
Roberts, "The Lincoln Wand," AFIPS Conference Proceedings, MIT Lincoln Laboratory (1966).
Robinett et al., "The Visual Display Transformation for Virtual Reality," University of North Carolina at Chapel Hill (1994).
Robotics Research Group, "Robot Design: Robot Manual Controller Design," The University of Texas of Austin, May 2009.
Roetenberg, "Inertial and magnetic sensing of human motion," Thesis (2006).
Roetenberg, et al., "Inertial and Magnetic Sensing of Human Movement Near Ferromagnetic Materials," Proceedings. The Second IEEE and ACM International Symposium on Mixed and Augmented Reality (Mar. 2003).
Rolland, et al., "A Survey of Tracking Technology for Virtual Environments," University of Central Florida, Center for Research and Education in Optics Lasers (CREOL) (2001).
Sakai, et al., "Optical Spatial Filter Sensor for Ground Speed," Optical Review, vol. 2, No. 1 pp. 65-67 (1994).
Sawada et al., "A Wearable Attitude-Measurement System Using a Fiberoptic Gyroscope" Massachusetts Institute of Technology, vol. 11, No., Apr. 2002, pp. 109-118.
Saxena et al., "In Use Parameter Estimation of Inertial Sensors by Detecting Multilevel Quasi-Static States," Lecture Notes in Computer Science, 2005—Berlin: Springer-Verlag, (Apr. 2004).
Sayed, "A Framework for State-Space Estimation with Uncertain Models," IEEE Transactions on Automatic Control, vol. 46, No. 7 (Jul. 2001).
Sayed, UCLA Adaptive Systems Laboratory-Home Page, UCLA, http://asl.ee.ucla.edu/index.php?option=com.sub.--frontpage &Itemid=1 (Aug. 2007).
Schmorrow et al., "The PSI Handbook of Virtual Environments for Training and Education," vol. 1, 2009.
Schofield, Jack et al., Coming up for airpad, The Guardian (Feb. 2000).
Screen Shot of Brave Spirits (1998).
Sega/Sports Sciences, Inc., "Batter Up, It's a Hit," Instruction Manual, Optional Equipment Manual (1994).
Sega/Sports Sciences, Inc., "Batter Up, It's a Hit," Photos of baseball ball (1994).
Selectech, "Airmouse Remote Control System Model AM-1 User's Guide," Colchester, VT (Sep. 24, 1991).
Selectech, "AirMouse Remote Controls, AirMouse Remote Control Warranty" (1991).
Selectech, "Changing, Driver Versions on CDTV/AMIGA" (Oct. 17, 1991).
Selectech, "Selectech AirMouse Remote Controls, Model # AM-R1," photographs (1991).
Selectech, Facsimile Transmission from Rossner to Monastiero, Airmouse Remote Controls, Colchester, VT(Mar. 25, 1992).
Selectech, Selectech AirMouse Devices (image) (1991).
Selectech, Software, "AirMouse for DOS and Windows IBM & Compatibles," "AirMouse Remote Control B0100EN-C, Amiga Driver, CDTV Driver, Version: 1.00," "AirMouse Remote Control B0100EM-C.1, Apple Macintosh Serial Driver Version: 1.00 (1.01B)," "AirMouse Remote Control B0100EL-B/3.05 DOS Driver Version: 3.0, Windows Driver Version 1.00," AirMouse Remote Control MS-DOS Driver Version: 3.00/3.05, Windows 3.0 Driver Version: 1.00 (1991).
"Self-Contained, Free Standing "Fishing Rod" Fishing Games," Miacomet and Interact Announce Agreement to Launch Line of Reel Feel ™ Sport Controllers, Press Release, May 13, 1999, 4 pages.
Seoul National Univ., "EMMU System"—Seoul National Univ Power Point Presentation, www.computer.org/Portal/cms_docs_ieeecs/ieeecs/education/csidc/CSIDC03Presentations/SNU.ppt (2003).
Serial Communication (Wikipedia) (Jul. 2, 2005).
Shoemake, Ken, Quaternions, UPenn, Online.
Simon, et al. "The Yo Yo: A Handheld Combining Elastic and Isotonic Input," http://www.uni-weimar.de/cms/fileadmin/medien/vr/documents/publications/TheYoYo-Interact2003-Talk.pdf (2003).
Simon, et al., "The Yo Yo: A Handheld Device Combining Elastic and Isotonic Input," Human-Computer interaction—INTERACT'03, pp. 303-310 (2003).
Smartswing internal drawing, 1 page.

(56) **References Cited**

OTHER PUBLICATIONS

Smith, "Gyrevolution: Orienting the Digital Era," http://www.gyration.com/images/pdfs/Gyration_White_Paper.pdf (2007).
Sorenson, et al., "The Minnesota Scanner: A Prototype Sensor for Three-Dimensional Tracking of Moving Body Segments," IEEE Transactions on Robotics and Animation (Aug. 1989).
Sourceforge.com, "ARToolkit API Documentation" (SourceForge web pages) (2004-2006).
Stovall, "Basic Inertial Navigation," NAWCWPNS TM 8128, Navigation and Data Link Section, Systems Integration Branch (Sep. 1997).
Sulic, "Logitech Wingman Cordless Rumblepad Review", Review at IGN, 4 pages, Jan. 14, 2002.
"Superfamicom Grip controller by ASCII," http://superfami.com/sfc_grip.html. Jul. 10, 2008, pp. 1-2.
Sutherland, "A Head-Mounted Three Dimensional Display," AFIPS '68 (Fall, part I): Proceedings of the Dec. 9-11, 1968, fall joint computer conference, part I, pp. 757-764 (Dec. 1968).
Sutherland, Ivan E., "Sketchpad: A Man-Machine Graphical Communication System," AFIPS '63 (Spring): Proceedings of the May 21-23, 1963, Spring Joint Computer Conference, pp. 329-346 (May 1963).
Sweetster, "A Quaternion Algebra Tool Set," http://world.std.com/%7Esweetser/quaternions/intro/tools/tools.html (Jun. 2005).
Swisher "How Science Can Improve Your Golf Game, Your Club is Watching" The Wall Street Journal, Apr. 18, 2005, 1 page.
Templeman, James N., "Virtual Locomotion: Walking in Place through Virtual Environments," Presence, vol. 8 No. 6, pp. 598-617, Dec. 1999.
Thinkoptics, Thinkoptics Wavit devices (image) (2007).
Timmer, "Data Analysis and Modeling Dynamic Processes in the Life Sciences," Freiburg Center for Data Analysis and Modeling, http://webber.physik.uni-freiburg.de/.about.jeti/ (Aug. 2007).
Timmer, "Modeling Noisy Time Series: Physiological Tremor," International Journal of Bifurcation and Chaos, vol. 8, No. 7 (1998).
Timmer, et al, "Pathological Tremors: Deterministic Chaos or Nonlinear Stochastic Oscillators?" Chaos, vol. 10, No. 1 (Mar. 2000).
Timmer, et al., "Characteristics of Hand Tremor time Series," Biological Cybernetics, vol. 70 (1993).
Timmer, et al., Cross-Spectral Analysis of Physiological Tremor and Muscle Activity: I Theory and Application to unsynchronized electromyogram, vol. 78 (1998).
Timmer, et al., Cross-Spectral Analysis of Physiological Tremor and Muscle Activity: II Application to Synchronized Electromyogram, Biological Cybernetics, vol. 78 (1998).
Timmer, et al., "Cross-Spectral Analysis of Tremor Time Series," International Journal of Bifurcation and Chaos, vol. 10, No. 11 (2000).
Titterton et al., "Strapdown Inertial Navigation Technology," pp. 1-56 and pp. 292-321 (May 1997).
Traq 3D (Trazer) Product, http://www.exergamefitness.com/traq_3d.htm, http://www.trazer.com/, http://www.traq3d.com/ (1997).
Traq 3D, "Healthcare" 1 pages, //www.traq3d.com/Healthcare/Healthcare.aspx, 1997.
Training Aid, SmartSwing, PGA Magazine, Apr. 2005, p. 46.
Transmission Mode (Apr. 22, 1999).
Ulanoff, Lance, "Nintendo's Wii is the Best Product Ever," PC Magazine (Jun. 21, 2007).
UNC Computer Science Department, "News & Notes from Sitterson Hall," UNC Computer Science, Department Newsletter, Issue 24, Spring 1999 (Apr. 1999).
Univ. Illinois at Chicago, "Cave—A Virtual Reality Theater," http://www.youtube.com/watch?v=Sf6bJjwSCE 1993.
Univ. Wash., "ARToolkit" (U. Wash. web pages) (1999).
Urban, "BAA 96-37 Proposer Information," DARPA/ETO (1996).
US Dynamics Corp, "Spinning Mass Mechanical Gyroscopes" (Aug. 2006).
US Dynamics Corp, "The Concept of 'Rate' (more particularly, angular rate pertaining to rate gyroscopes) (rate gyro explaination)," (Aug. 2006).
US Dynamics Corp, "US Dynamics Model 475 Series Rate Gyroscope Technical Brief—brief discussion on rate gyroscope basics, operation, and uses, and a dissection of the model by major component" (Dec. 2005).
US Dynamics Corp, "US Dynamics Rate Gyroscope Interface Brief (rate gyro IO)" (Aug. 2006).
Van den Bogaard, "Using linear filters for real-time smoothing of rotational data in virtual reality application," http://www.science.uva.nl/research/ias/alumni/m.sc.theses/theses/RobvandenBogaard.pdf (Aug. 2004).
Van Laerhoven, et al., "Using an Autonomous Cube for Basic Navigation and Input," Proceedings of the 5th International Conference on Multimodal interfaces, Vancouver, British Columbia, Canada, pp. 203-210 (2003).
Van Rheeden, et al., "Noise Effects on Centroid Tracker Aim Point Estimation," IEEE Trans. on Aerospace and Electronic Systems, vol. 24, No. 2, pp. 177-185 (Mar. 1988).
Vaz, et al., "An Adaptive Estimation of Periodic Signals Using a Fourier Linear Combiner," IEEE Transactions on Signal Processing, vol. 42, Issue 1, pp, 1-10 (Jan. 1994).
Verplaetse, "Inertial Proprioceptive Devices: Self-Motion Sensing Toys and Tools," IBM Systems Journal (Sep. 1996).
Verplaetse, "Inertial-Optical Motion-Estimating Camera for Electronic Cinematography," Masters of Science Thesis, MIT, (1997).
Virtual Fishing, Operational Manual, 2 pages, Tiger Electronics, Inc., 1998.
Vorozcovs, et al.,"The Hedgehog: A Novel Optical Tracking Method for Spatially Immersive Displays," MIT Presence, vol. 15, No. 1, pp. 108-121 (2006).
VR Solutions, "IS-1200", www.vrs.com.au/motion-tracking/intersense/is-1200.html 2 pages.
Wang, et al., "Tracking a Head-Mounted Display in a Room-Sized Environment with Head-Mounted Cameras," SPIE 1990 Technical Symposium on Optical Engineering and Photonics in Aerospace Sensing, vol. 1290, pp. 47-57 (1990).
Ward, et al., "A Demonstrated Optical Tracker With Scalable Work Area for Head-Mounted Display Systems," Symposium on Interactive 3D Graphics, Proceedings of the 1992 Symposium on Interactive 3D Graphics, pp. 43-52, ACM Press, Cambridge, MA (1992).
Watt, 3D Computer Graphics, "Three-Dimensional Geometry in Computer Graphics,", pp. 1-22 Addison-Wesley (1999).
Welch et al., "HiBall-3100™ Wide-Area, High-Precision Tracker and 3D Digitizer," http://www.3rdtech.com/HiBall.htm (2002-2006).
Welch et al., HiBall Devices (images) (2002-2006).
Welch et al., Motion Tracking: No Silver Bullet, but a Respectable Arsenal IEEE Computer Graphics and Applications, vol. 22, No. 6, pp. 24-38 (Nov. 2002).
Welch, "Hybrid Self-Tracker: An Inertial/Optical Hybrid Three-Dimensional Tracking System," Tech. Report TR95-048, Dissertation Proposal, Univ. of North Carolina at Chapel Hill, Dept. Computer Science, Chapel Hill, N.C. (1995).
Welch, "A Self-Contained Wide-Area Tracker Using Sensor Fusion" (2001).
Welch, "Hawkeye Zooms in on Mac Screens with Wireless Infrared Penlight Pointer," MacWeek (May 1993).
Welch, et al., "Complementary Tracking and Two-Handed Interaction for Remote 3D Medical Consultation with a PDA," Proceedings of Trends and Issues in Tracking for Virtual Environments, Workshop at the IEEE Virtual Reality 2007 Conference (Mar. 2007).
Welch, et al., "High-Performance Wide-Area Optical Tracking: The HiBall Tracking System," MIT Presence: Teleoperators & Virtual Environments (2001).
Welch, et al., "SCAAT: Incremental Tracking with Incomplete Information," Computer Graphics, SIGGRAPH 97 Conference Proceedings, pp. 333-344 (Aug. 1997).
Welch, et al., "Source Code for HiBall+Inerital device," UNC-CH Computer Science (Jun. 1998).
Welch, et al., "The HiBall Tracker: High-Performance Wide-Area Tracking for Virtual and Augmented Environments," ACM SIGGRAPH, Addison-Wesley (1999).

(56) **References Cited**

OTHER PUBLICATIONS

Welch, et al., "The High-Performance Wide-Area Optical Tracking : The HiBall Tracking System," MIT Presence, Presence, vol. 10 , No. 1 (Feb. 2001).
Welch, et al., "Tracking for Training in Virtual Environments: Estimating the Pose of People and Devices for Simulation and Assessment," [J. Cohn, D. Nicholson, and D. Schmorrow, editors, the PSI Handbook of Virtual Environments for Training and Education: Developments for the Military and Beyond, Chap.1, pp. 23-47] (2008).
Widrow, et al., "Fundamental Relations Between the LMS Algorithm and the DFT," IEEE Transactions on Circuits and Systems, vol. 34, No. CAS-7, (Jul. 1987).
Williams, et al., "Physical Presence: Palettes in Virtual Spaces," Society of Photo-Optical Instrumentation Engineers (SPIE) Conference Series, vol. 3639, No. 374-384 (May 1999).
Williams, Robert L. et al., "Implementation and Evaluation of a Haptic Playback System," vol. 3 No. 3, Haptics-e (2004).
Williams, Robert L. et al., "The Virtual Haptic Back Project," Presented at the IMAGE 2003 Conference, Scottsdale, Arizong (Jul. 14-18, 2003).
Wilson, "Wireless User interface Devices for Connected Intelligent Environments," Ubicomp 2003 Workshop (2003).
Wilson, "WorldCursor: Pointing in intelligent Environments with a Tele-operated Laser Pointer," UIST'03 Companion (Nov. 2003).
Wilson, "XWand: UI for Intelligent Environments," http://research.microsoft.com/en-us/um/people/awilson/wand/default.htm (Apr. 2004).
Wilson, et al. "Demonstration of the XWand Interface for Intelligent Spaces," UIST'02 Companion, pp. 37-38 (Oct. 2002).
Wilson, et al., "Gesture Recognition Using the Xwand," ri.cmu.edu (2004).
Wilson, et al., "Xwand: UI for Intelligent Spaces," CHI 2003, Proceedings of the SIGCHI conference on Human factors in computing systems, pp. 545-552 (Apr. 2003).
Wilson, Research page, biography available at http://research.microsoft.com/en-us/um/people/awilson/!0sr=a, Microsoft Corp. (2009).
Wilson, Transcript of Testimony, Investigation No. 337-TA-658, Before the United States International Trade Commission, vol. V (May 15, 2009).
Wilson, XWand video, http://research.microsoft.com/~awilson/wand/wand%20video%20768k.WMV (Mar. 2002).
Wireless (Wikipedia) (Aug. 12, 2005).
Wormell, "Unified Camera, Content and Talent Tracking in Digital Television and Movie Production," InterSense, Inc. & Mark Read, Hypercube Media Concepts, Inc. Presented: NAB 2000, Las Vegas, NV, Apr. 8-13, 2000 (2000).
Wormell, et al., "Advancements in 3D Interactive Devices for Virtual Environments," ACM International Conference Proceeding Series; vol. 39 (2003).
Worringham, et al., "Directional Stimulus-Response Compatibility: A Test of Three Alternative Principles," Ergonomics, vol. 41, Issue 6, pp, 864-880 (Jun. 1998).
Worringham, et al., "Tablet-PC Classroom System Wins Design Competition," Computer, vol. 36, No, 8, pp. 15-18 (Aug. 2003).
Yang, et al., "Implementation and Evaluation of 'Just Follow Me': An Immersive, VR-Based, Motion-Training System," MIT Presence: Teleoperators and Virtual Environments, vol. 11 No. 3, at 304-23 (MIT Press) (Jun. 2002).
You, et al., "Hybrid Inertial and Vision Tracking for Augmented Reality Registration," http://graphics.usc.edu/cgit/pdf/papers/Vr1999.PDF (1999).
You, et al., "Orientation Tracking for Outdoor Augmented Reality Registration," IEEE Computer Graphics and Applications, IEEE, vol. 19, No. 6, pp. 36-42 (Nov. 1999).
Youngblut, et al., "Review of Virtual Environment Interface Technology," Institute for Defense Analyses (Jul. 1996).
Yun, et al., "Recent Developments in Silicon Microaccelerometers," SENSORS, University of California at Berkeley (Oct. 1992).
Zhai, "Human Performance in Six Degree of Freedom Input Control," Thesis, University of Toronto (1995).
Zhai., "User Performance in Relation to 3D Input Device Design", Computer Graphics 32(4), Nov. 1998, 15 pages.
Zhou, et al., "A survey—Human Movement Tracking and Stroke Rehabilitation," Technical Report: CSM-420, ISSN 1744-8050, Dept. of Computer Sciences, University of Essex, UK (Dec. 8, 2004).
Zhu, et al., "A Real-Time Articulated Human Motion Tracking Using Tri-Axis Inertial/Magnetic Sensors Package," IEEE Transactions on Neural Systems and Rehabilitation Engineering, vol. 12, No. 2 (Jun. 2004).
European Search Report for Application No. EP 07 11 2880, Oct. 18, 2007.
Office Action issued in related Chinese patent application 200610111559.7 (Sep. 18, 2009).
Office Action issued in related Japanese patent application 2006-216569 (Oct. 20, 2009).
Office Action issued in corresponding Japanese patent application 2007-203785 (Oct. 27, 2008).
Notice of Allowance issued on Sep. 17, 2010 in U.S. Appl. No. 11/446,188 (Petition to Withdraw filed).
Office Action issued Oct. 21, 2009 in U.S. Appl. No. 11/446,188.
Office Action issued Feb. 27, 2009 in U.S. Appl. No. 11/446,188.
Office Action issued Apr. 30, 2008 in U.S. Appl. No. 11/446,188.
Notice of Allowance issued on Apr. 15, 2010 in U.S. Appl. No. 11/532,328.
Office Action issued Oct. 6, 2009 in U.S. Appl. No. 11/532,328.
Office Action issued Nov. 25, 2008 in U.S. Appl. No. 11/532,328.
Office Action issued Oct. 19, 2010 in U.S. Appl. No. 11/446,187.
Office Action (Examiner-Initiated Interview Summary) issued Oct. 26, 2009 in U.S. Appl. No. 11/446,187.
Office Action issued Aug. 19, 2009 in U.S. Appl. No. 11/446,187.
Office Action issued Apr. 29, 2009 in U.S. Appl. No. 11/446,187.
Office Action issued Feb. 26, 2009 in U.S. Appl. No. 11/446,187.
Office Action issued Jun. 14, 2010 in U.S. Appl. No. 11/404,871.
Office Action issued Sep. 20, 2009 in U.S. Appl. No. 11/404,871.
Office Action issued Mar. 18, 2009 in U.S. Appl. No. 11/404,871.
Office Action issued Sep. 4, 2008 in U.S. Appl. No. 11/404,871.
Office Action issued Sep. 1, 2010 in U.S. Appl. No. 11/790,780.
Office Action issued Mar. 12, 2010 in U.S. Appl. No. 11/790,780.
Notice of Allowance issued May 21, 2010 in U.S. Appl. No. 12/222,787.
Office Action issued Feb. 5, 2010 in U.S. Appl. No. 12/222,787.
Office Action issued Aug. 23, 2010 in U.S. Appl. No. 11/488,135.
Office Action issued Apr. 21, 2010 in U.S. Appl. No. 11/488,135.
Notice of Allowance issued Sep. 14, 2010 in U.S. Appl. No. 11/764,409.
Office Action issued Jan. 6, 2010 in U.S. Appl. No. 11/764,409.
Office Action issued Feb, 20, 2009 in U.S. Appl. No. 11/764,409.
Office Action issued Oct. 6, 2010 in U.S. Appl. No. 11/404,844.
Office Action issued Sep. 18, 2009 in U.S. Appl. No. 11/404,844.
Office Action issued Jan. 29, 2009 in U.S. Appl. No. 11/404,844.
Office Action issued Sep. 4, 2008 in U.S. Appl. No. 11/404,844.
Office Action issued May 3, 2010 in U.S. Appl. No. 11/598,787.
Translation of Opposition Brief of BigBen of Sep. 2, 2010 Against European Patent No. EP-1854518.
Japanese Office Action issued in JP 2005-249265 dated Apr. 21, 2011.
AirPad Controller Manual (AirPad Corp. 2000).
Airpad Motion Relext Controller for Sony Playstation—Physical Product (AirPad Corp.2000).
Analog Devices Data Sheet, "MicroConverter®, Multichannel 12-Bit ADC with Embedded Flash MCU, ADuC812" (2003) (http://www.analog.com/static/imported-files/data_sheets/ADUC812.pdf) 60 pages.
Bloomberg: Nintendo Announces Wireless GBA Link, Sep. 2003, 2 pages.
Brownell, Richard: Review of Peripheral-GameCube-G3 Wireless Controller, GAF, Jul. 17, 2003, 2 pages.
Buchanan, Levi: "Happy Birthday, Rumble Pak," IGN.com, Apr. 3, 2008, 2 pages.
Buxton et al., "A Study in Two-Handed Input," ACM CHI '86 Proceedings (1986).

(56) **References Cited**

OTHER PUBLICATIONS

Crossan, A. et al.: A General Purpose Control-Based Trajectory Playback for Force-Feedback Systems, University of Glasgow, Dept. Computing Science, 4 pages (Feb. 2008).
Fielder, Lauren: "E3 2001: Nintendo unleashes GameCube software, a new Miyamoto game, and more," GameSpot, May 16, 2001, 2 pages, http://www.gamespot.com/downloads/2761390.
Furniss, Maureen, "Motion Capture," MoCap MIT (Dec. 1999) 12 pages.
Gamecubicle, Jim-New Contributor, Nintendo WaveBird Control, http://www.gamecubicle.com/news-nintendo_gamecube_wavebird_controller.htm, May 14, 2002.
Gyration, Inc., GyroRemote and Mobile RF Keyboard User Manual, Saratoga, CA 24 pages, www.theater.stevejenkins.com/docs/Gyration_Keyboard_Manual (Mar. 9, 2011).
Gyration, Inc., GyroRemote GP240-01 Professional Series, copyrighted 2003, www.gyration.com.
Hinkley et al. Stitching: pen gestures that span multiple displays, 2004.
Holden, Maureen K., et al.: Use of Virtual Environments in Motor Learning and Rehabilitation Department of Brain and Cognitive Sciences, Handbook of Virtual Environments: Design, Implementation, and Applications, Chap. 49, pp. 999-1026, Stanney (ed), Lawrence Erlbaum Associates 2002.
House, Matthew, Product Description: Hot Wheels Stunt Track Driver, Hot Wheels (Jan. 2000).
Immersion CyberGlove product, Immersion Corporation, 1990, http://www.cyberglovesystem.com.
Intersense, "IS-900 Precision Motion Trackers" www.isense.com May 16, 2003.
Intersense, "InterSense Motion Trackers" www.isense.com Mar. 12, 1998.
Intersense, "InterSence Inc. The New Standard in Motion Tracking" www.isense.com Mar. 27, 2004.
Intersense, "IS-900 Precision Motion Trackers" www.isense.com Sep. 10, 2002.
Leganchuk et al., "Manual and Cognitive Benefits of Two-Handed Input: An Experimental Study," ACM Transactions on Computer-Human Interaction, vol. 5, No. 4, pp. 326-359 (Dec. 1998).
MaClean, Karen, Publications and patents, bibliography (Nov. 2006).
Marrin, "Possibilities for the Digital Baton as a General-Purpose Gestural Interface", Late-Breaking/Short Talks, CHI 97, Mar. 22-27, 1997 (pp. 311-312).
Merians, Alma S. et al.: "Virtual Reality-Augmented Rehabilitation for Patients Following Stroke," Physical Therapy, vol. 82, No. 9 (Sep. 2002).
Nintendo Game Boy, Consumer Information and Precautions Booklet, Nintendo, Jul. 31, 1969.
Nintendo, Nintendo Entertainment System Consumer Information and Precautions Booklet, Nintendo of America, Inc. 1992.
Nintendo, Nintendo Entertainment System Instruction Nintendo of America, Inc. 1992.
Nintendo, Nintendo Entertainment System Booth 2002.
Nintendo, Nintendo Entertainment System Layout, May 9, 2002.
Nintendo, Nintendo Feature: Histoty of Pokeman Part 2, Official Nintendo Magazine May 17, 2009, http:///www.officialnintendomagazine.co.uk/article.php?id=8576.
Paradiso, Joseph A., "The Brain Opera Technology: New Instruments and Gestural Sensors for Musical Interaction and Performance" (Nov. 1998) ("Brain Opera Article").
Perry Simon: "Nintendo to Launch Wireless Game Boy Adaptor," Digital Lifestyles, Sep. 26, 2003 http://digital-lifestyles.info/2003/09/26/nintendo-to-launch-wireless-game-boy-adaptor/.
Pokeman Pinball Game, 1999, Wikipedia Article, http://en.wikipedia.org/wiki/Pok?C3?A9mon_Pinball.
Polhemus: "Fastrak, The Fast and Easy Digital Tracker" copyrighted 2001, Coldiester, Vermont 2 pages.
PowerGlove product Program Guide, Mattel, 1989.
PowerGlove product, Mattel, 1989 Wikipedia Article.
Satterfield, Shane, E3 2002: Nintendo announces new GameCube games, GameSpot, May 21, 2002, http://wwwgamespot.com/gamecube/action/rollarama/new.html?sid=2866974&com_act-convert&om_clk=nesfeatures&tag=newsfeatures%Btitle%3B.
Smartswing: "Register to be notified when Smartswing products are available for purchase," 3 pages, May 2004, retrieved May 19, 2009, http://web.archive.org/web/20040426182437/www.smartswing-golf.com/.
SmartSwing: "SmartSwing: Intellegent Golf Clubs that Build a Better Swing," 2 pages, 2004 retrieved Sep. 5, 2009, http://web.archive.org/web/20040728221951/http://www.smartswinggolf. . . .
SmartSwing: "The SmartSwing Learning System Overview," 3 pages, 2004, retrieved May 19, 2009, http://web.archive.org/web/20040810142134/http://www.smartswinggolf.com/t. . . .
Smartswing: "The SmartSwing Product, 3 pages, 2004, retrieved May 19, 2009, http://web.archive.org/web/200400403204628/http://www.smartswinggolf.com/. . .".
Smartswing: The SmartSwing Product Technical Product: Technical Information, 1 page, 2004, retrieved May 19, 2009, http://web.archive.org/web/200400403205906/http://www.smartswinggolf.com/. . . .
VTI, Mindflux—VTi CyberTouch, 1996, http://www.mindflux.com.au/products/vti/cybertouch.html.
Virtual Technologies, Inc., Cyberglove brochure, Palo Alto, CA, www.virtex.com. (1999).
Wiley, M.: "Nintendo Wavebird Review," US, Jun. 11, 2002, 21 pages.
Wired Glove, Wikipedia Article, 4 pages, http://en.wikipedia.org/wik/Wired_glove. (Nov. 18, 2010).
Examiner's Answer issued Feb. 22, 2011 in U.S. Appl. No. 11/404,871.
U.S. Appl. No. 11/745,842, filed May 8, 2007.
U.S. Appl. No. 11/446,187, filed Jun. 5, 2006, now U.S. Pat. No. 7,942,245.
U.S. Appl. No. 11/446,188, filed Jun. 5, 2006, now U.S. Pat. No. 7,931,535.
U.S. Appl. No. 11/404,871, filed Apr. 17, 2006.
U.S. Appl. No. 11/404,844, filed Apr. 17, 2006.
U.S. Appl. No. 11/532,328, filed Sep. 15, 2006, now U.S. Pat. No. 7,927,216.
U.S. Appl. No. 11/598,787, filed Nov. 14, 2006, now U.S. Pat. No. 7,905,782.
U.S. Appl. No. 11/790,780, filed Apr. 27, 2007.
U.S. Appl. No. 11/764,409, filed Jun. 18, 2007, now U.S. Pat. No. 7,877,224.
U.S. Appl. No. 12/889,863, filed Sep. 24, 2010.
U.S. Appl. No. 13/071,008, filed Mar. 24, 2011.
U.S. Appl. No. 13/071,028, filed Mar. 24, 2011.
Office Action dated Jan. 27, 2011 issued in co-pending U.S. Appl. No. 11/504,086.
Office Action dated Sep. 4, 2008 issued in co-pending U.S. Appl. No. 11/404,871.
Office Action dated Mar. 18, 2009 issued in co-pending U.S. Appl. No. 11/404,871.
Office Action dated Sep. 30, 2009 issued in co-pending U.S. Appl. No. 11/404,871.
Office Action dated Jun. 14, 2010 issued in co-pending U.S. Appl. No. 11/404,871.
Office Action dated Oct. 6, 2014 in parent U.S. Appl. No. 14/330,403.
Altmann, Rotations, Quaternions, and Double Groups, Dover Publications (2005).
Bowman et al., *3D User Interfaces: Theory and Practice*, Addison-Wesley, (2005).
Brown et al., *Introduction to Random Signals and Applied Kalman Filtering*, Third Ed., Wiley, John & Sons, Incorporated, (1997).
Brown, et al., *Introduction to Random Signals and Applied Kalman Filtering*, 2d ed., John Wiley & Sons Inc. (1992).
Burdea, et al., *Virtual Reality Technology*, Wiley, John & Sons, Incorporated (1994).
Cohn, et al., *The PSI Handbook of Virtual Environments for Training and Education*, Praeger Security International, vols. 1-3 (2009).
Durlach, et al., *Virtual Reality: Scientific and Technological Challenges*, National Academy Press, (1995).

(56) **References Cited**

OTHER PUBLICATIONS

Foley, et al., *Computer Graphics: Principles and Practice*, 2nd ed., Addison-Wesley Publishing Company, Inc., (1990).
Foley, et al., *Computer Graphics: Principles and Practice*, 2nd ed. In C, Addison-Wesley Publishing Company, Inc. (1996).
Foley, et al., *Fundamentals of Interactive Computer Graphics*, Addison-Wesley Publishing Co., Inc. Boston, MA, USA (1982).
Fraden, *Handbook of Modern Sensors: Physics, Designs and Applications*, 3rd ed., Springer Science+Business Media, LLC, New York, NY (2004).
Greenburg, *Advanced Engineering Mathematics*, 2nd ed., Prentice-Hall, Inc., (1998).
Grewal, et al., *Global Positioning Systems, Inertial Navigation, and Integration*, John Wiley & Sons Inc. (2001).
Hildebrand, *Methods of Applied Mathematics*, 2nd ed, Dover Publications Inc., (1992).
Hoffman et al., *Linear Algebra*, 2nd ed., Prentice Hall, (1971).
Jekelo, *Interial Navigation Systems with Geodetic Applications*, Walter de Gruyter GmbH & Co. (2001).
Kalawsky, *The Science of Virtual Reality and Virtual Environments*, Addison Wesley Publishing Company. (1993).
Kibble et al., *Classical Mechanics*, Imperial College Press (2004).
Kreyszig, *Advanced Engineering Mathematics*, Wiley, John & Sons, Incorporated (1999).
Kuipers, *Quaternions and Rotation Sequences*, Princeton University Press (1999).
Latombe, *Robot Motion Planning*, Kluwer Academic Press (1991).
LaValle, *Planning Algorithms*, Cambridge University Press, (2006).
Markey, et al., *The Mechanics of inertial Position and Heading Indication*, MIT, Cambridge Mass., New York: John Wiley & Sons Inc. (1961).
Misner et al., *Gravitation*, 1st ed., W. H. Freeman & Co. (1973).
Poole, *The Physics Handbook: Fundamentals and Key Equations*, 2nd ed., Wiley-VHC, (2007).
Spong et al., *Robot Modeling and Control*, Wiley & Sons, Inc., (2006).
Thornton, et al., *Classical Dynamics of Particles & Systems*, 5th ed., Brooks Cole, (2004).
Titterton, et al., *Strapdown Inertial Navi ration Technology*, 2nd ed., Institution of Electrical Engineers (2004).
Wilson, *Sensor Technology Handbook*, Elsevier, Inc., (2005).
Zuang, et al., *Camera-aided Robot Calibration*, CRC Press, Inc., (1996).
Notice of Allowance in related U.S. Appl. No. 14/317,010 dated Nov. 6, 2015.

* cited by examiner

F I G. 1

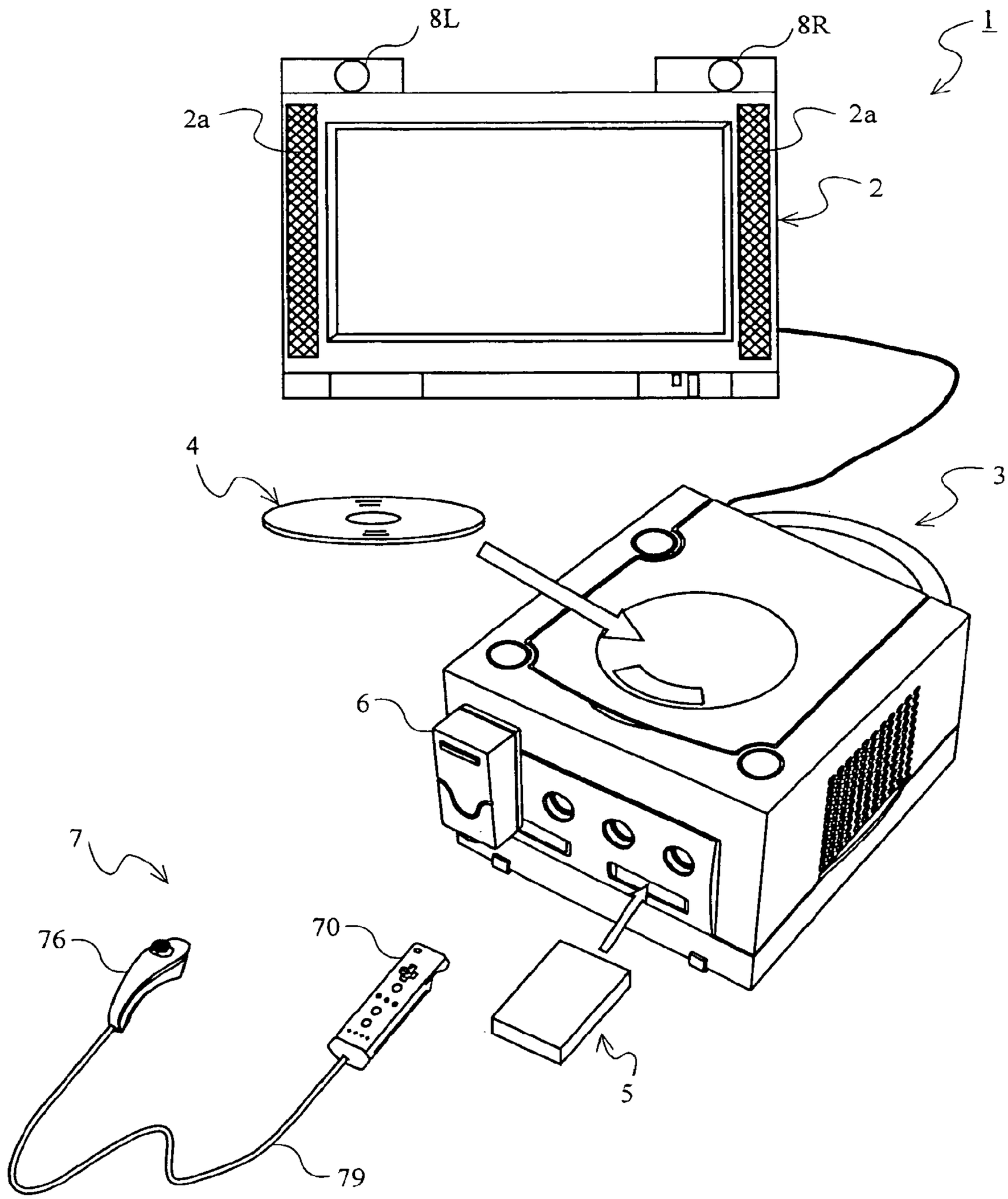

FIG. 2

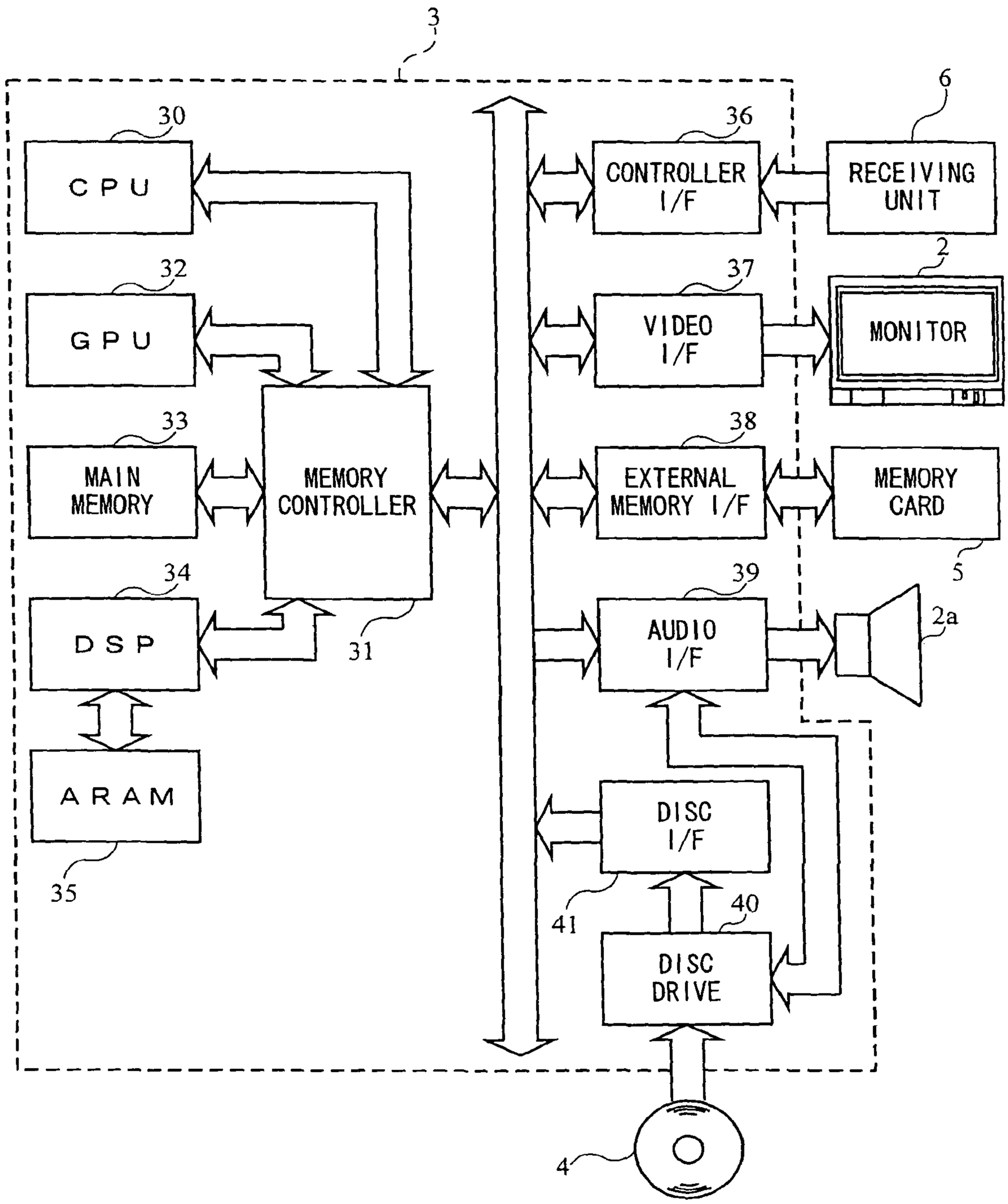
3
30
CPU
32
GPU
33
MAIN MEMORY
34
DSP
ARAM
35
MEMORY CONTROLLER
31
36
CONTROLLER I/F
6
RECEIVING UNIT
37
VIDEO I/F
2
MONITOR
38
EXTERNAL MEMORY I/F
MEMORY CARD
5
39
AUDIO I/F
2a
DISC I/F
41
40
DISC DRIVE
4

FIG. 3

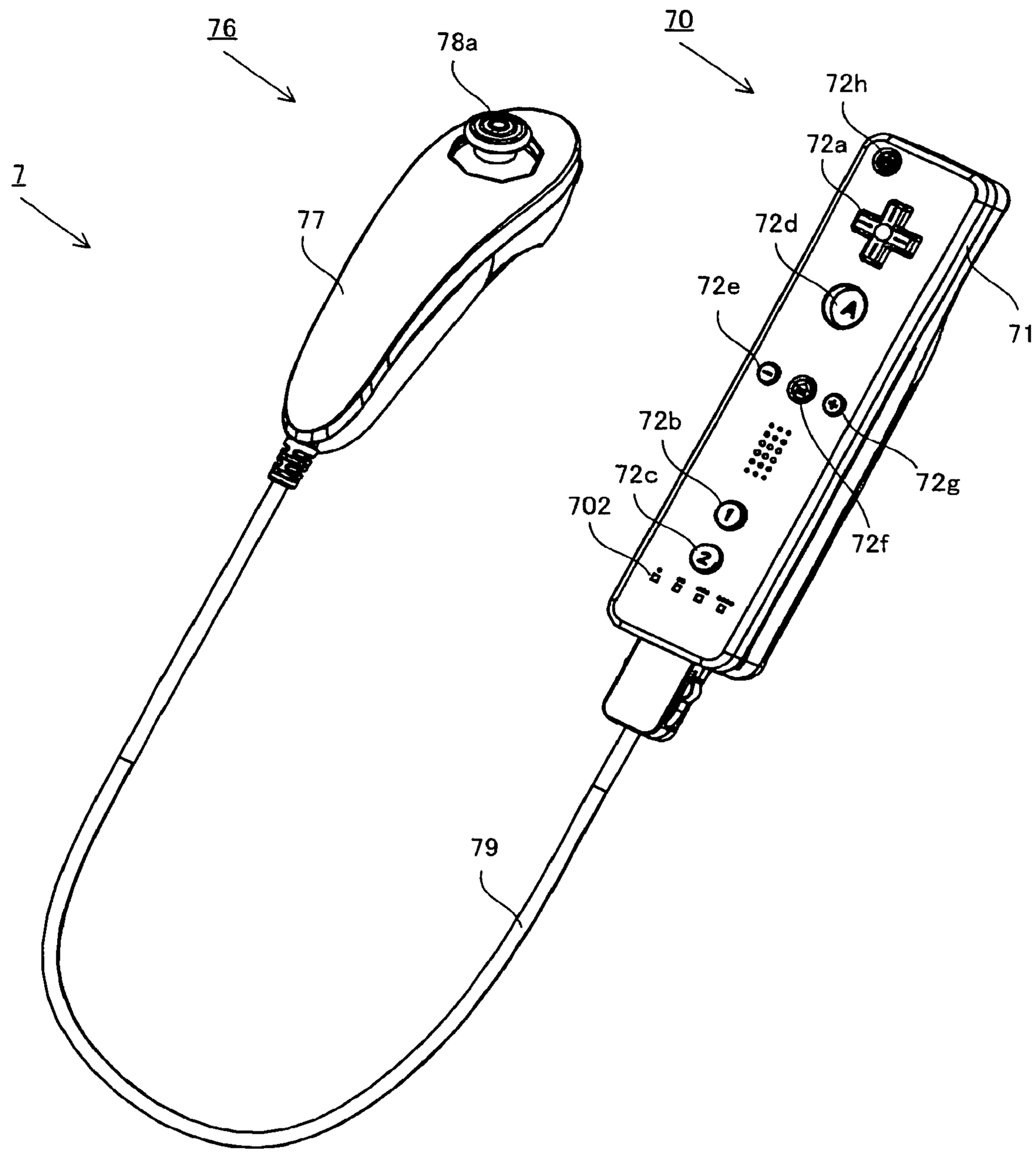

FIG. 4

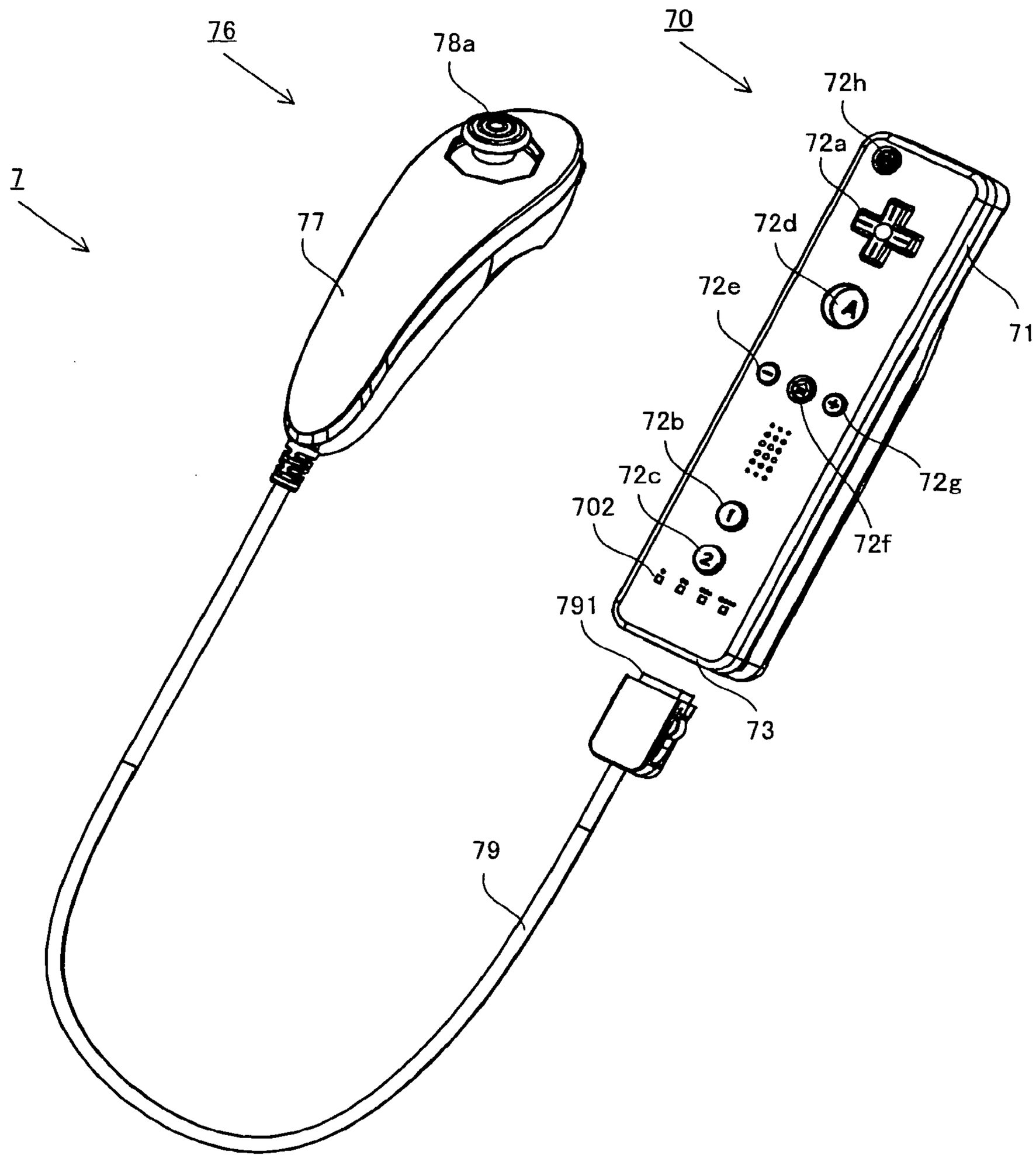

FIG. 5

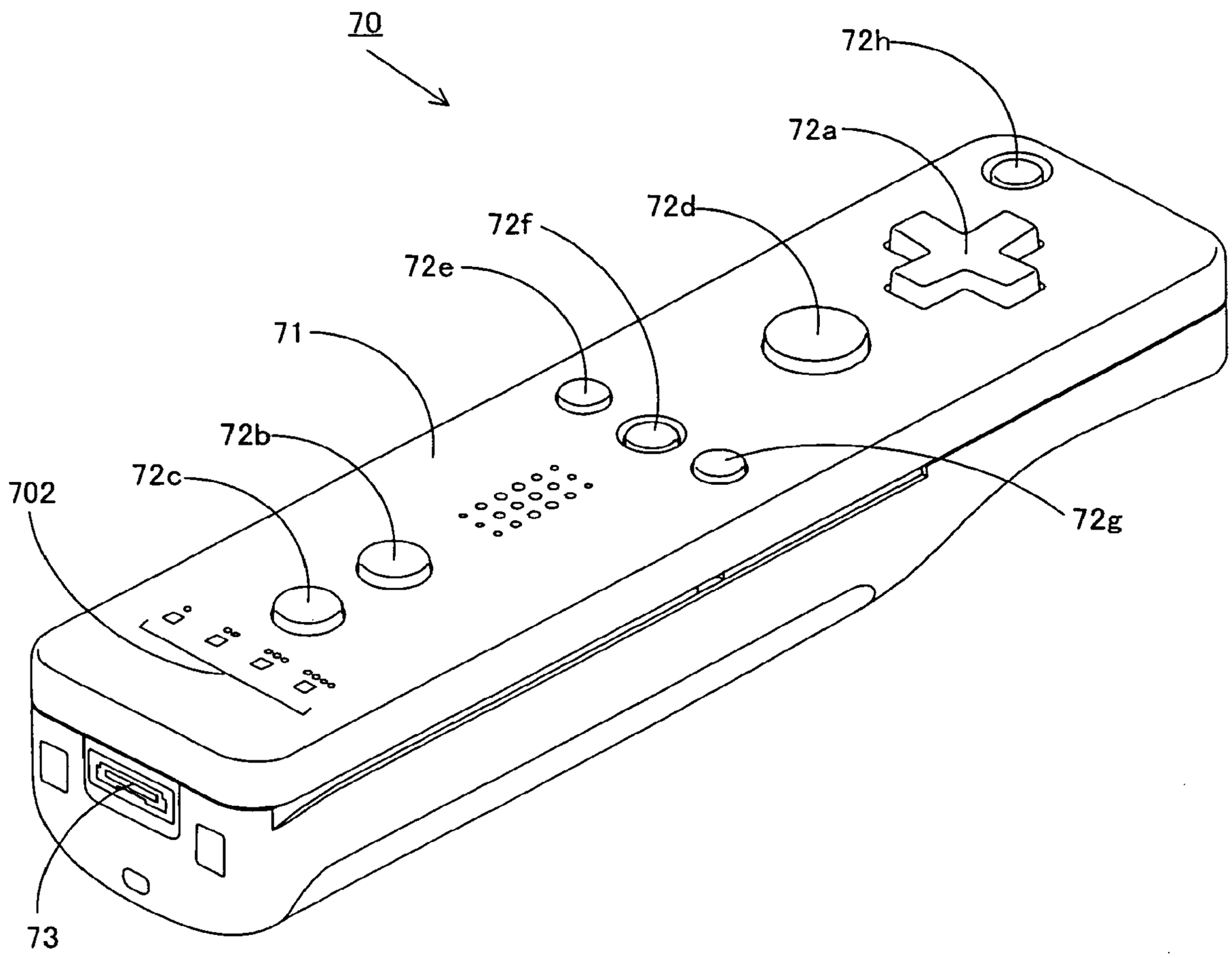

FIG. 6

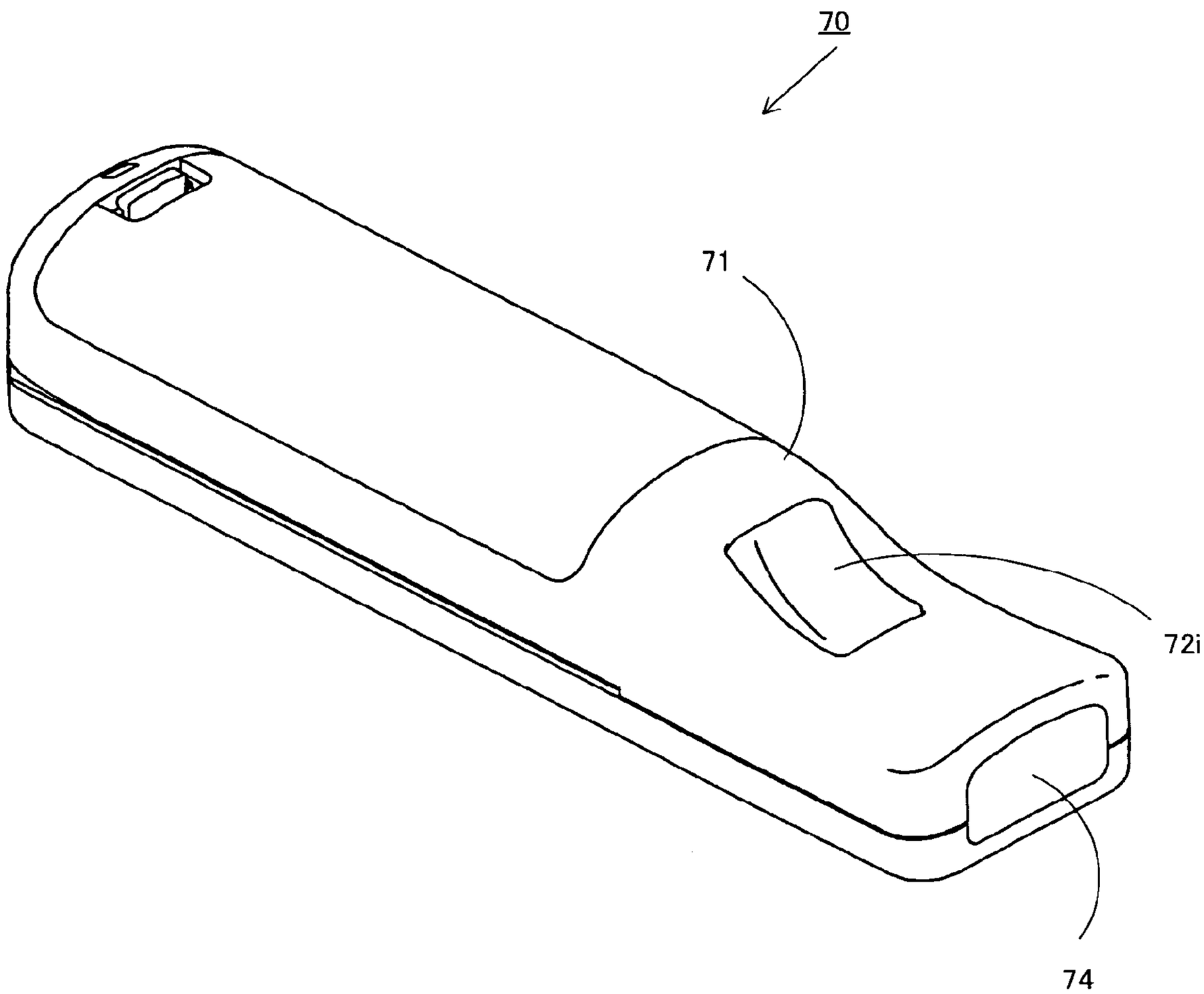

FIG. 7

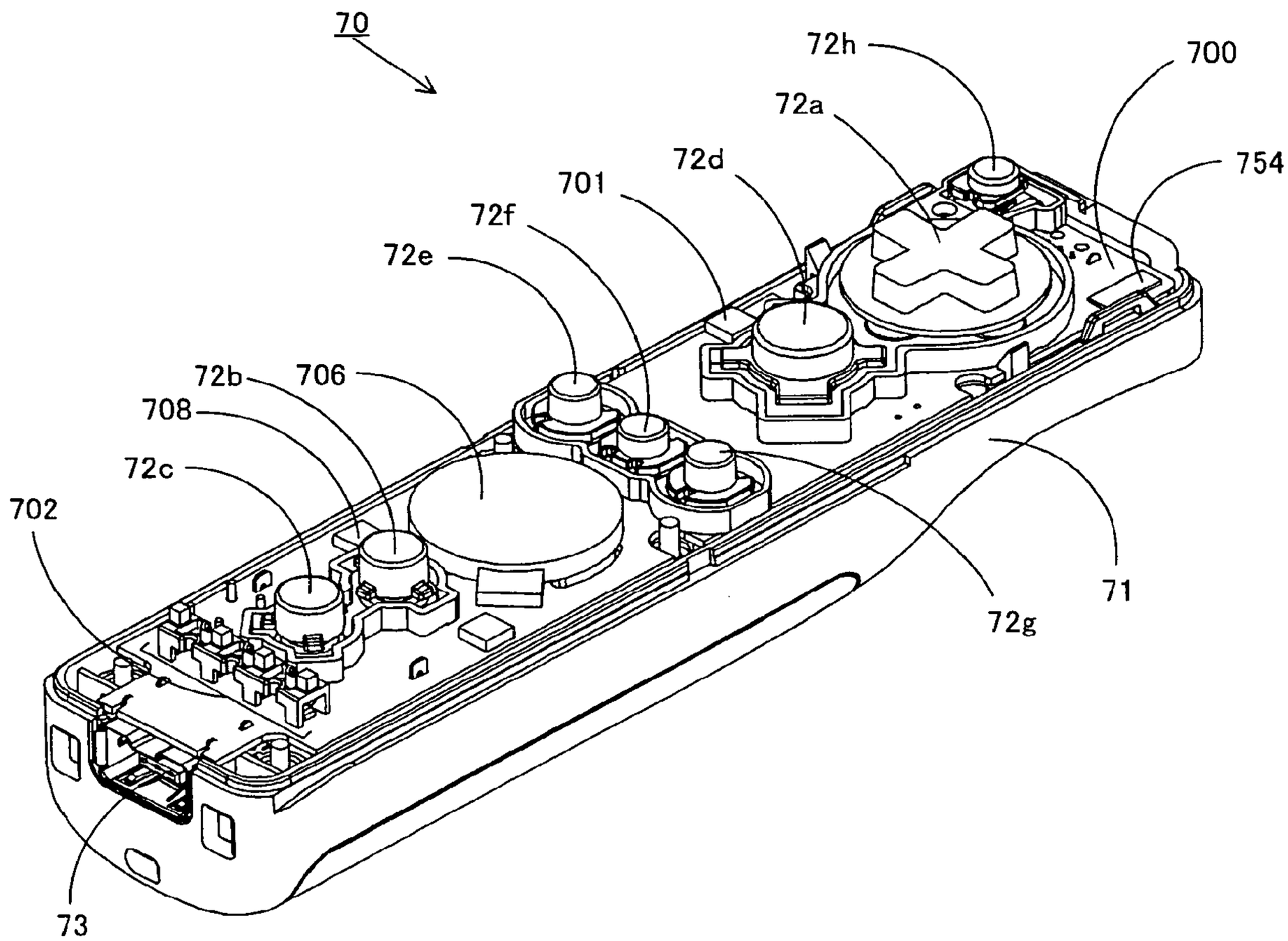

FIG. 8

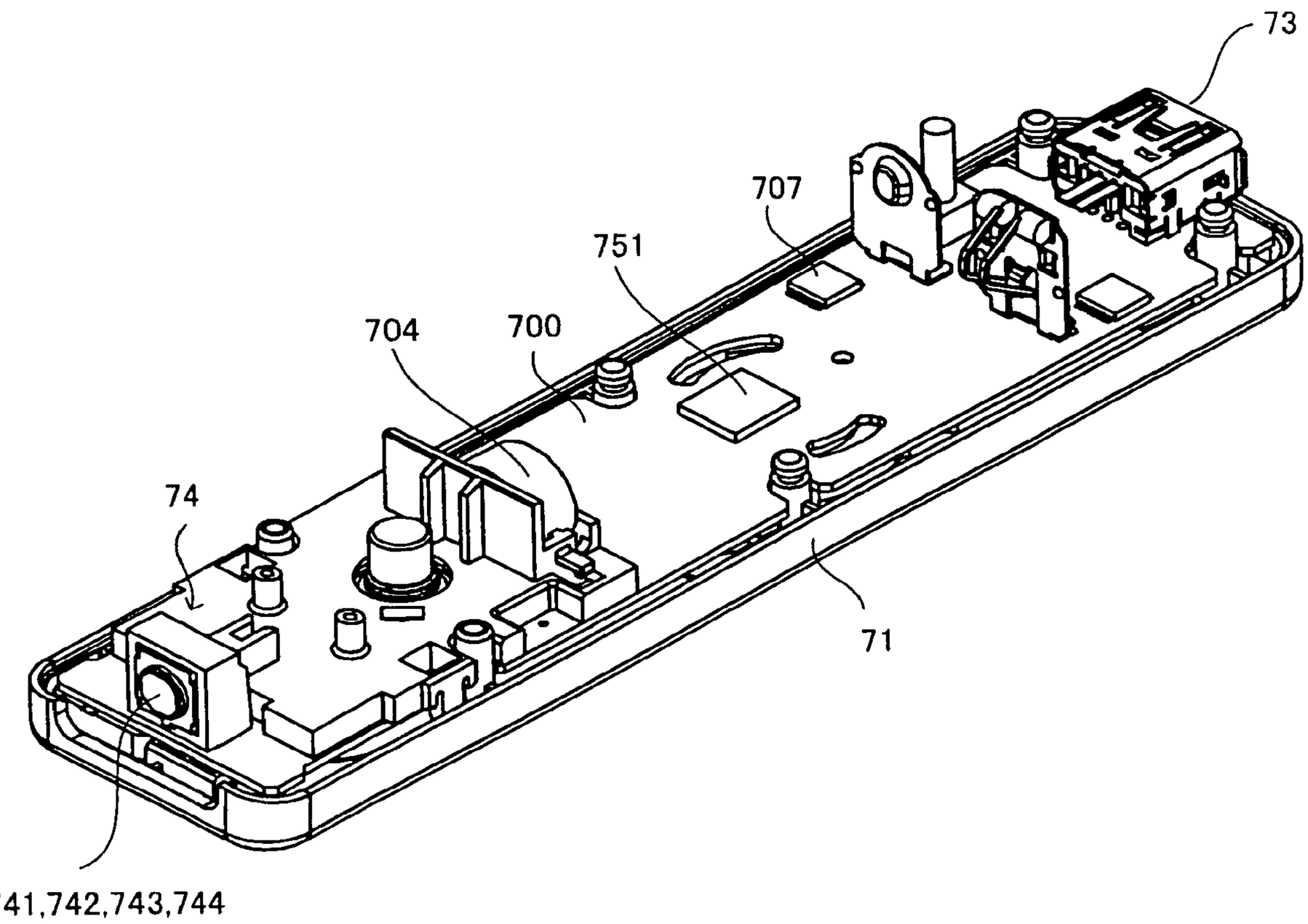

FIG. 9

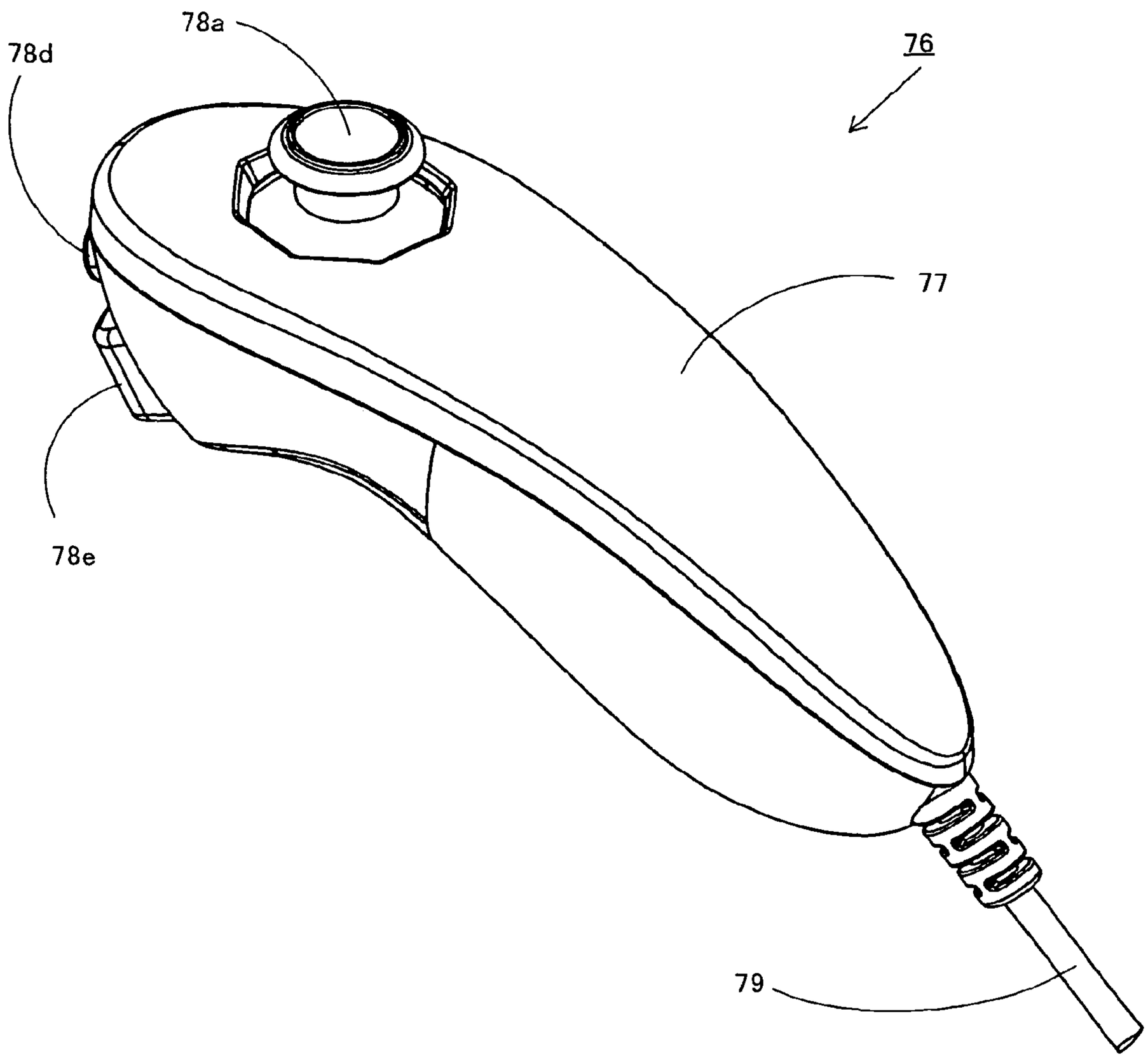

FIG. 10

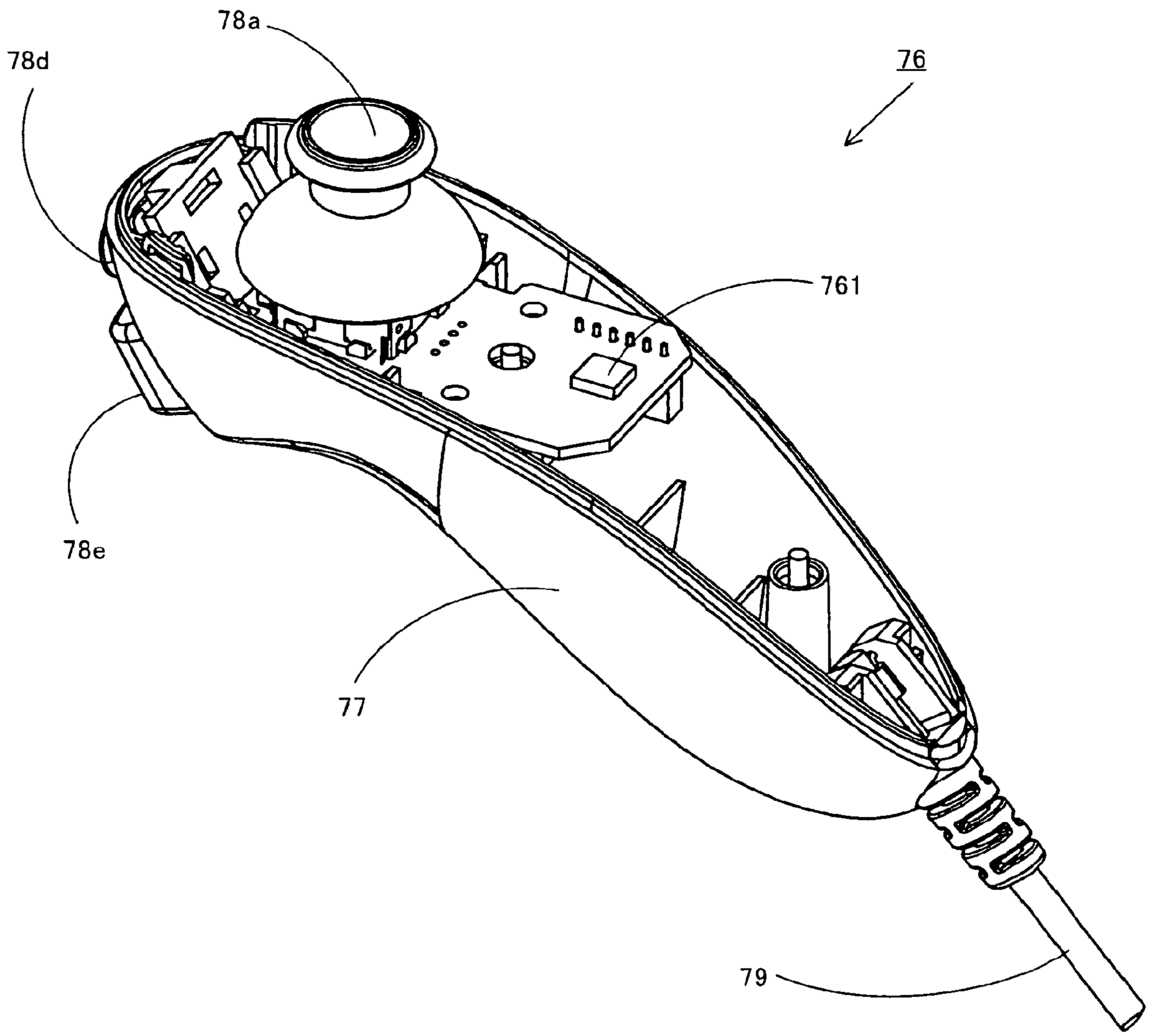

FIG. 11C

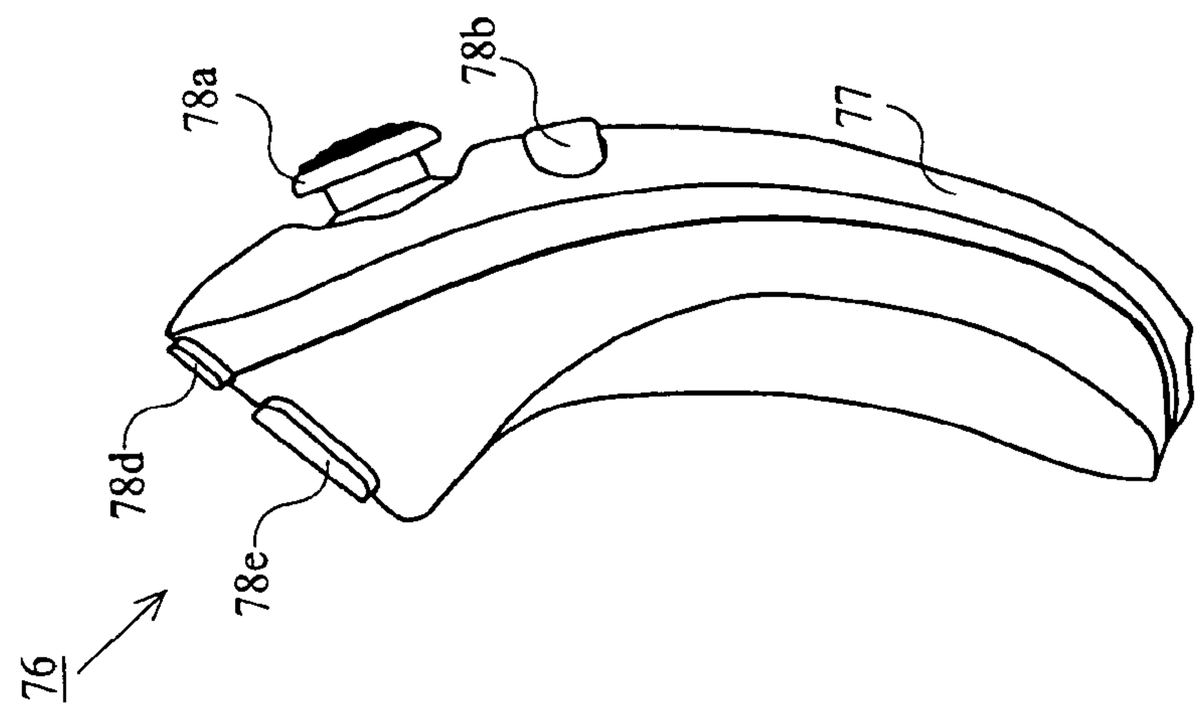

FIG. 11B

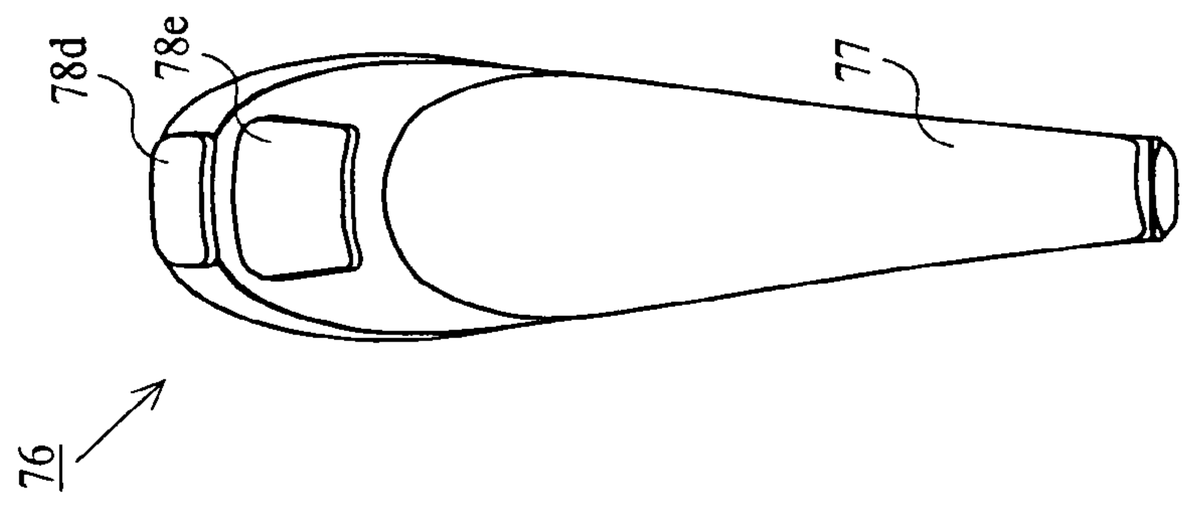

FIG. 11A

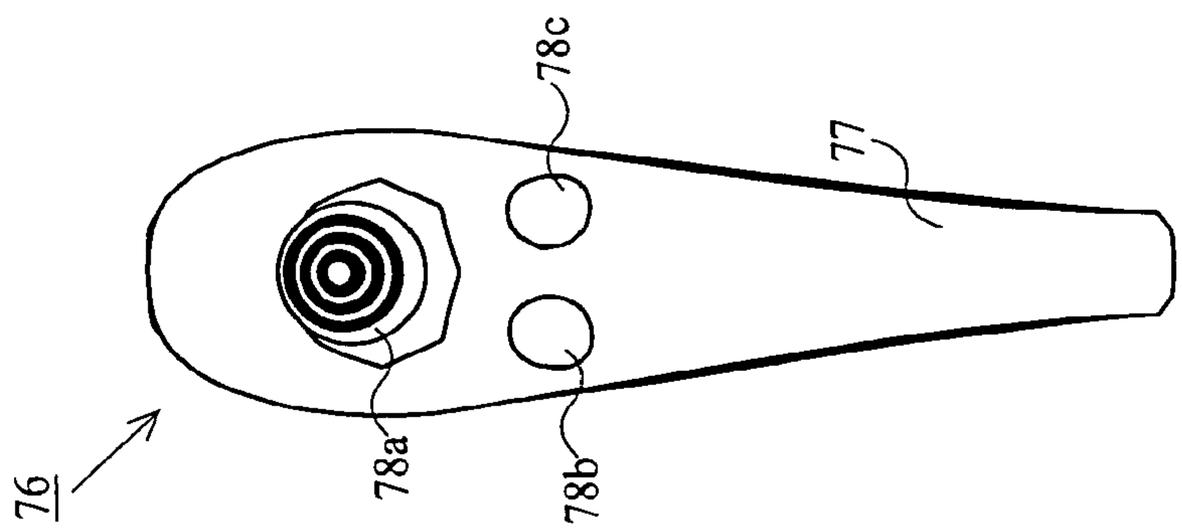

FIG. 12

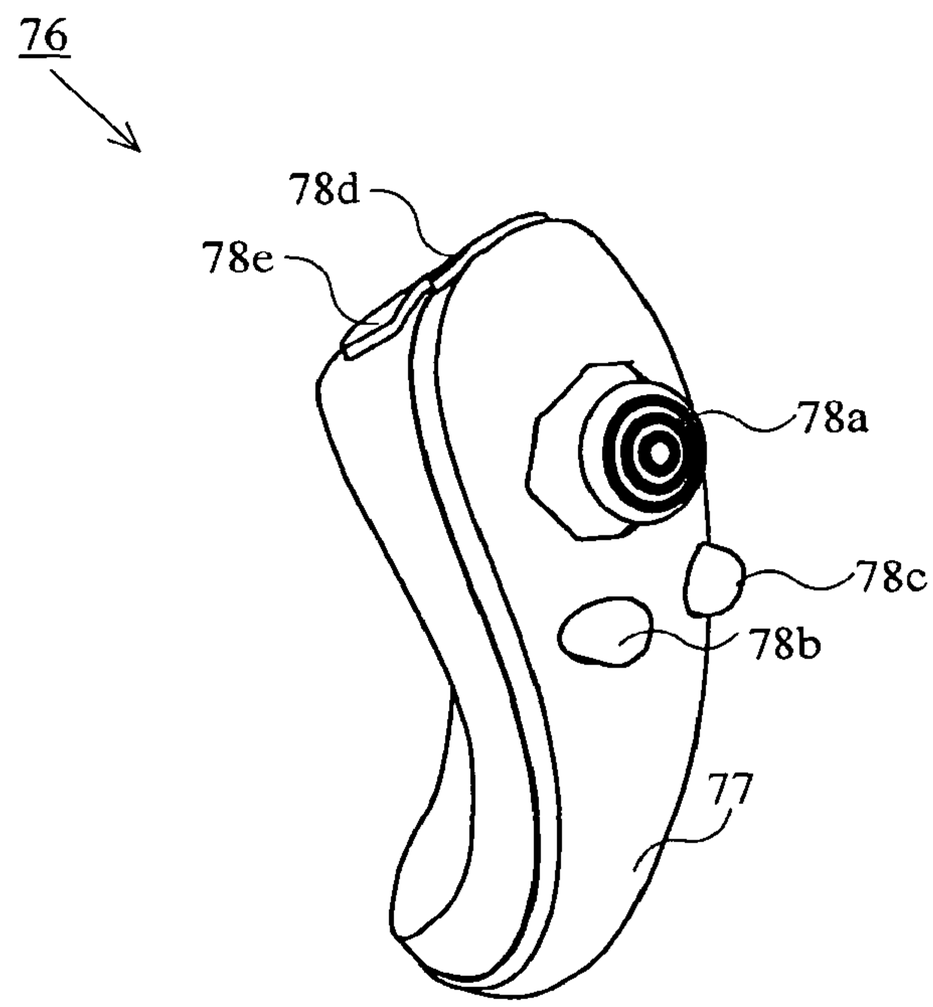

FIG. 13

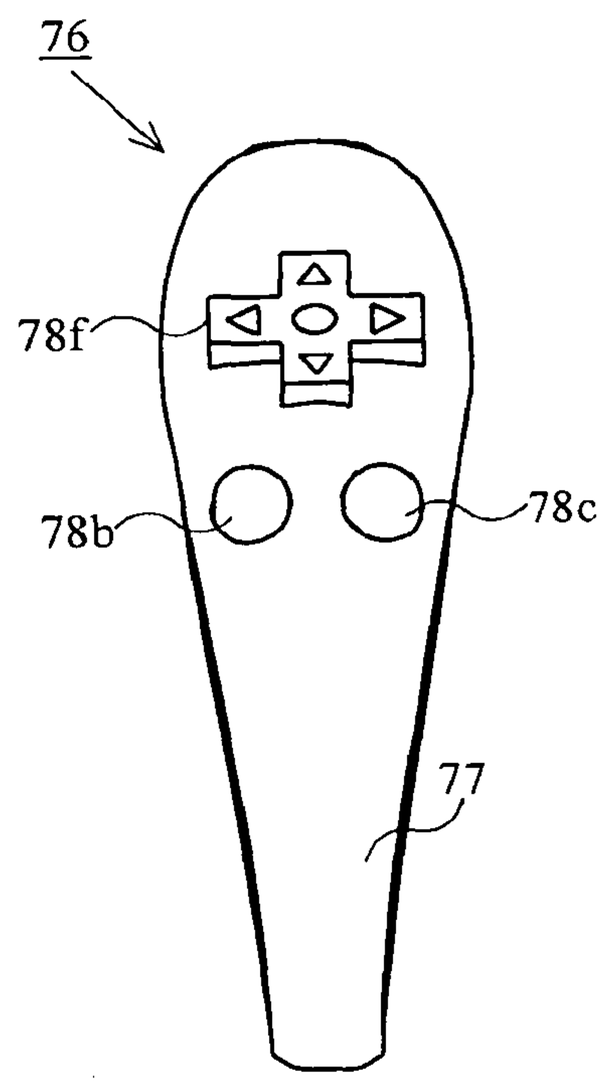

FIG. 14

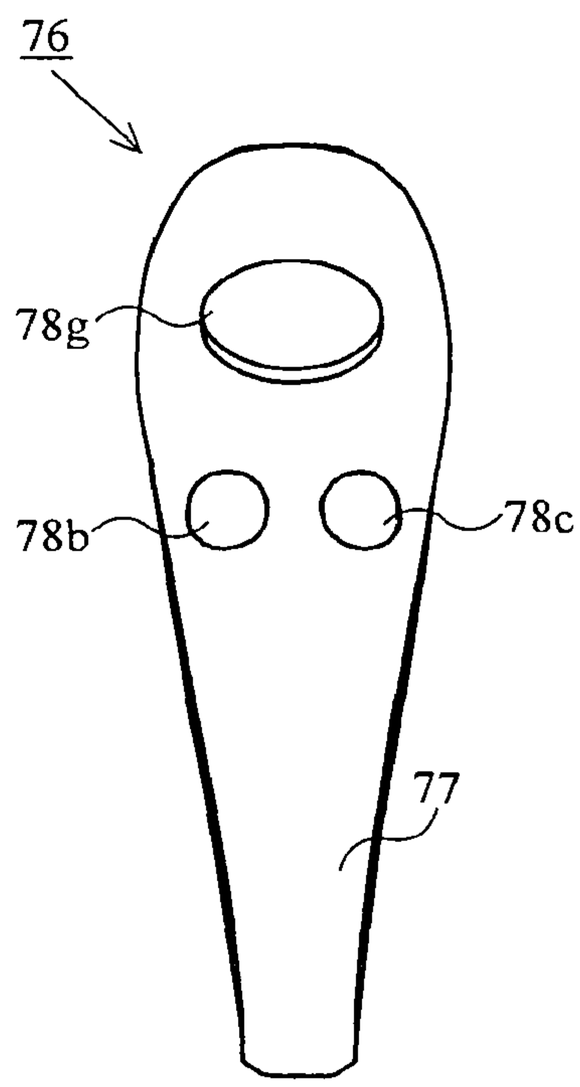

FIG. 15

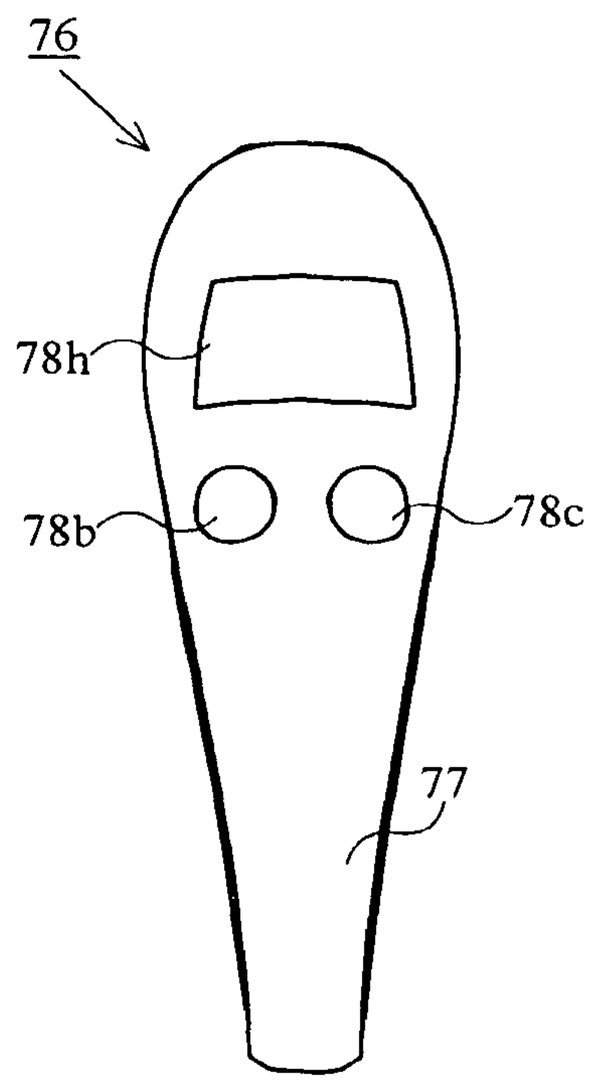

FIG. 16

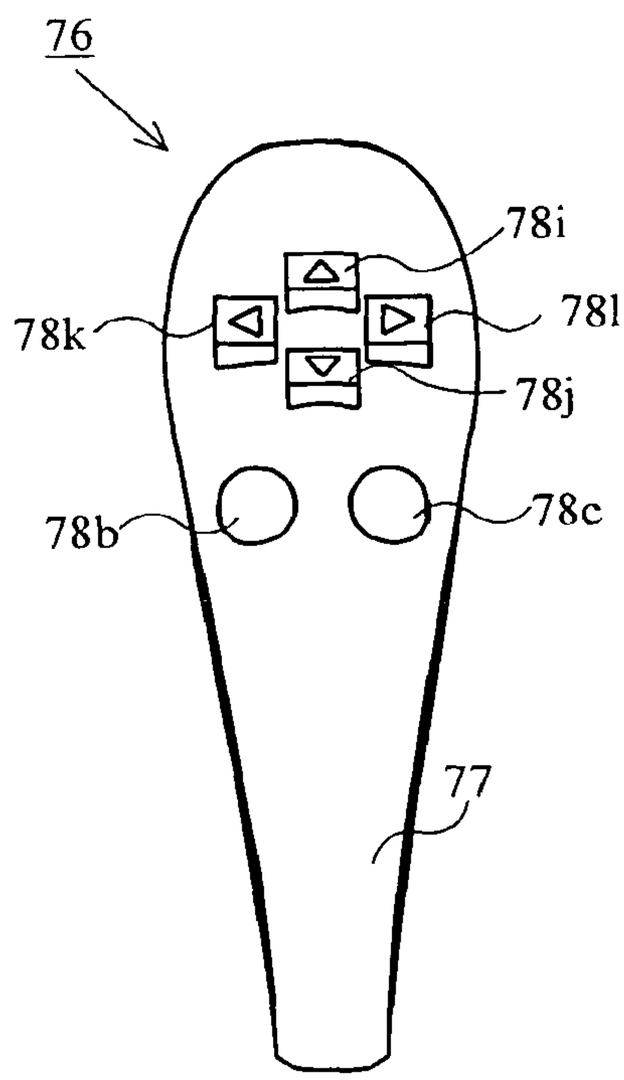

FIG. 17

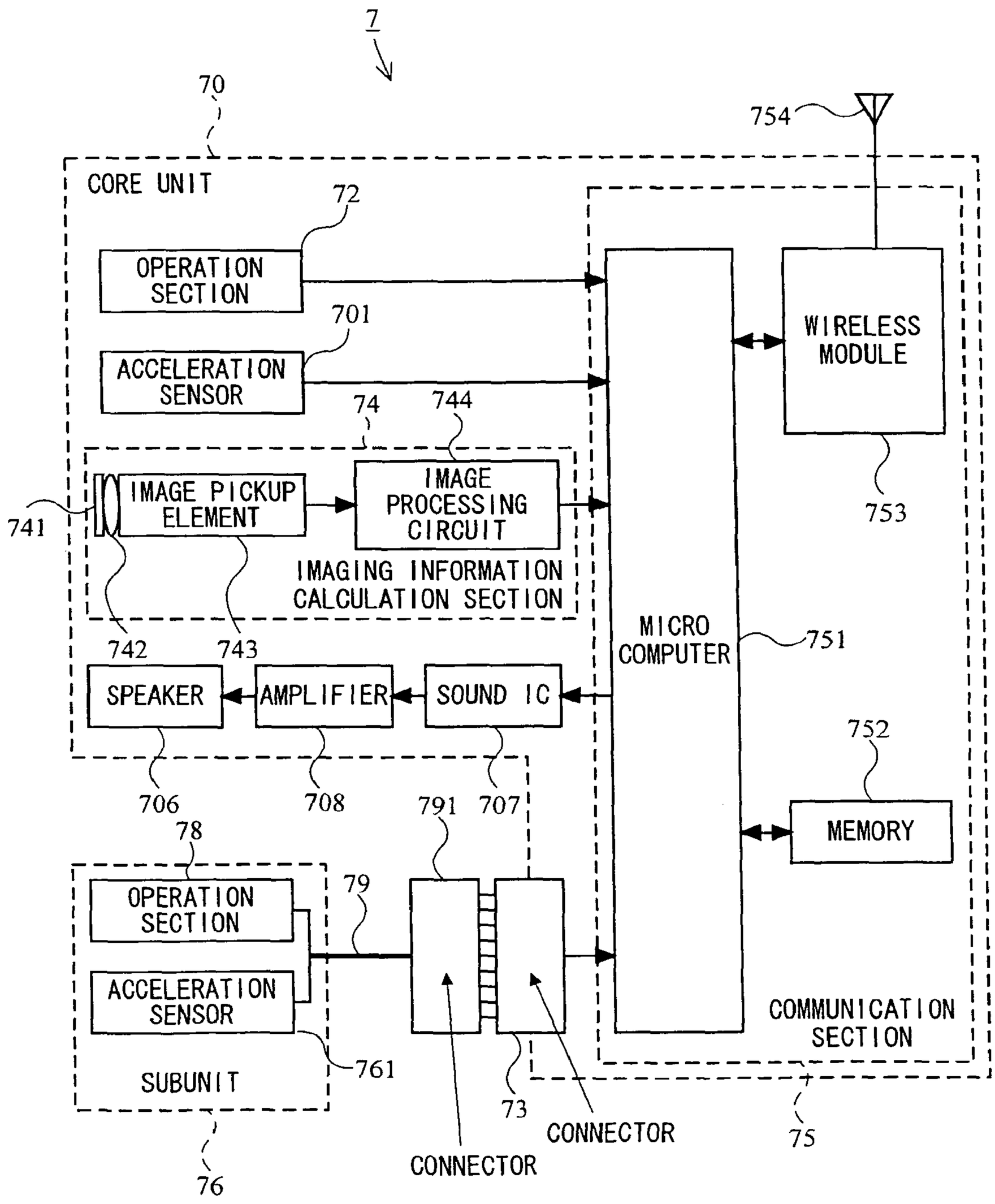
7
70
754
CORE UNIT
72
OPERATION SECTION
701
ACCELERATION SENSOR
74
744
IMAGE PICKUP ELEMENT
IMAGE PROCESSING CIRCUIT
741
IMAGING INFORMATION CALCULATION SECTION
742
743
SPEAKER
AMPLIFIER
SOUND IC
706
708
707
791
78
OPERATION SECTION
ACCELERATION SENSOR
79
761
SUBUNIT
76
CONNECTOR
73
CONNECTOR
MICRO COMPUTER
751
WIRELESS MODULE
753
752
MEMORY
COMMUNICATION SECTION
75

FIG. 18

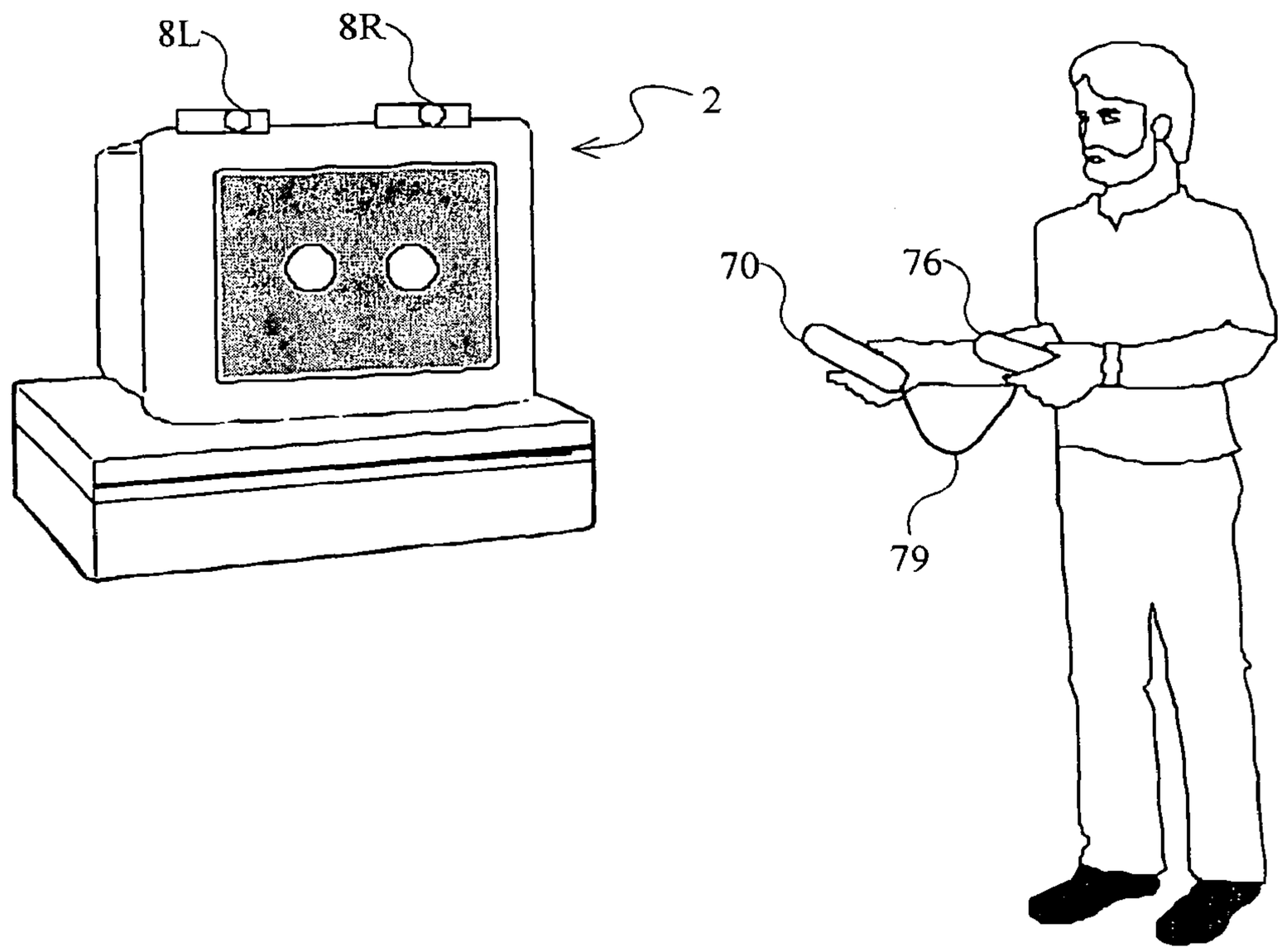

FIG. 19

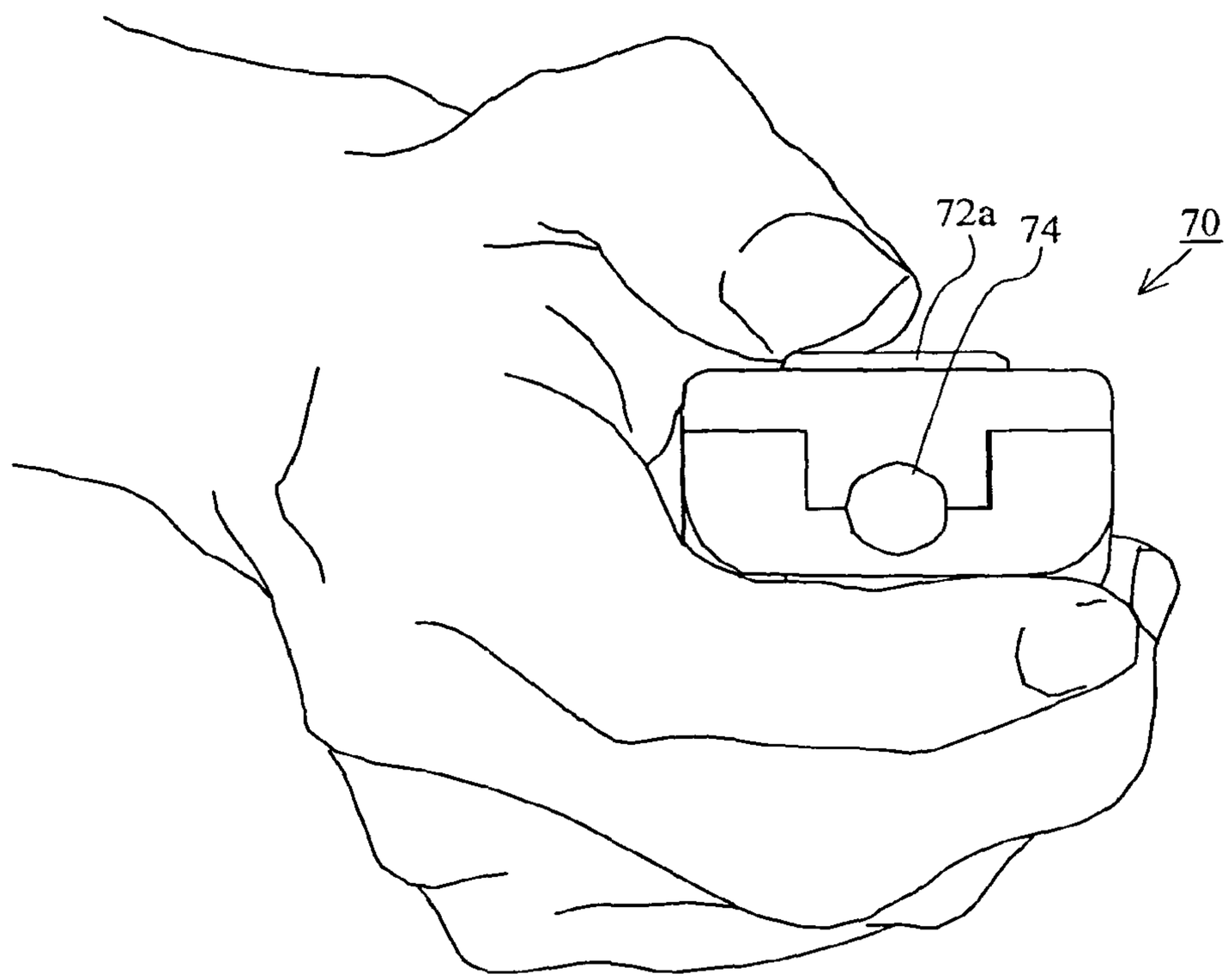

FIG. 20

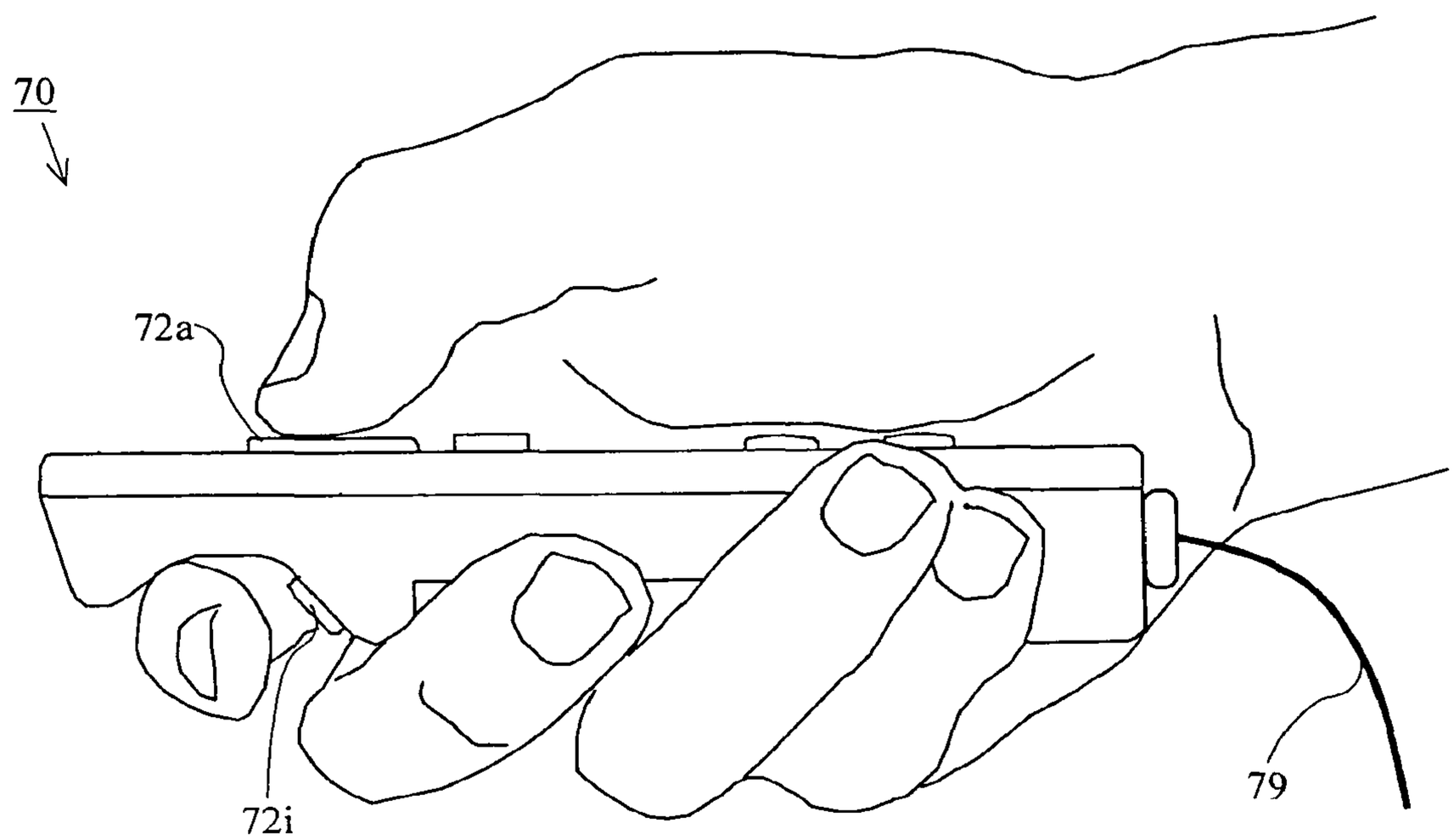

FIG. 21

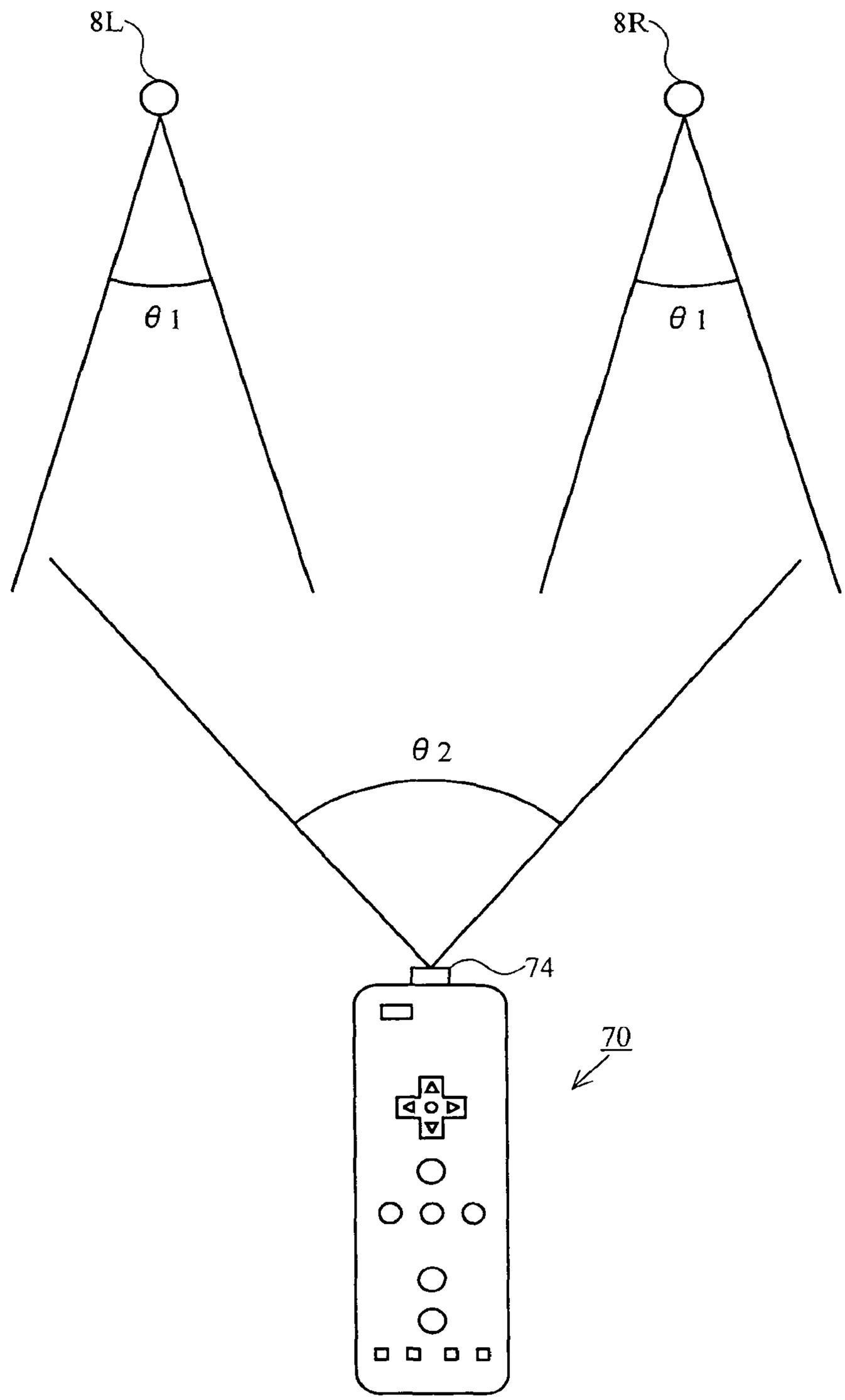

FIG. 22

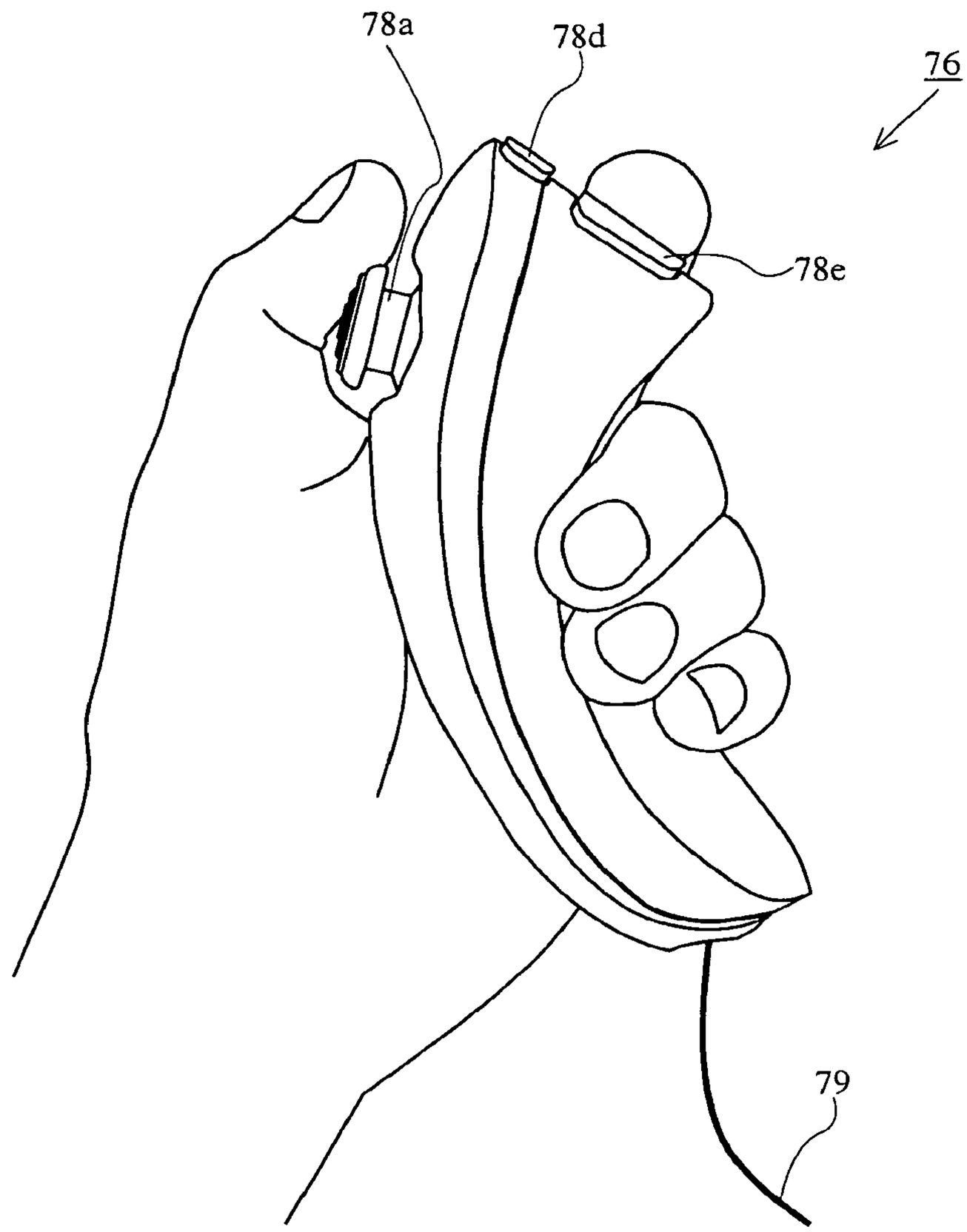

FIG. 23

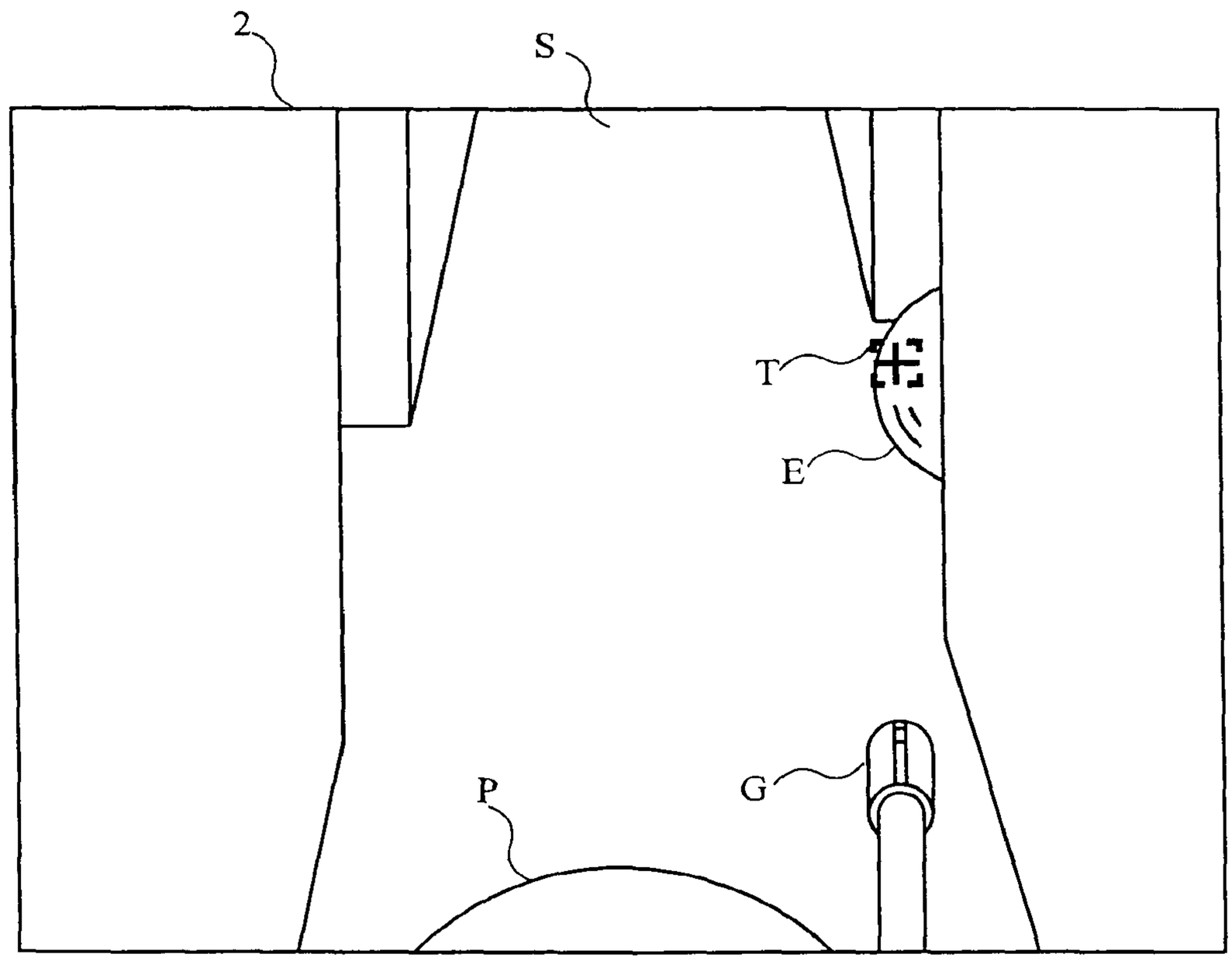

GAME CONTROLLER AND GAME SYSTEM

CROSS REFERENCE TO RELATED APPLICATIONS

This application is a continuation of U.S. application Ser. No. 14/330,403 filed Jul. 14, 2014 which is a continuation of U.S. application Ser. No. 12/285,812 filed Oct. 15, 2008 (now U.S. Pat. No. 8,834,271 issued Sep. 16, 2014), which is a divisional of U.S. application Ser. No. 11/504,086, filed 15 Aug. 2006, (now U.S. Pat. No. 8,267,786 issued Sep. 18, 2012), which in turn is a continuation-in-part of U.S. application Ser. No. 11/404,871, filed 17 Apr. 2006 (now U.S. Pat. No. 8,870,655 issued Oct. 28, 2014), which claims priority of JP 2005-242926, filed 24 Aug. 2005, JP 2006-122681, filed Apr. 26, 2006, and U.S. Application No. 60/714,862, filed 8 Sep. 2005, the entire contents of each of which are incorporated herein by reference.

BACKGROUND OF THE INVENTION

1. Field of the Invention

The present invention relates to a game controller and a game system, and more particularly to a game controller which includes two control units connected to each other by a flexible cable and is operated using the two control units and a game system including the game controller.

2. Description of the Background Art

For example, Japanese Laid-Open Patent Publication No. 2004-313492 (hereinafter, referred to as Patent Document 1) discloses a controller having its control units held by both hands of a player, respectively, so as to play a game.

The controller disclosed in Patent Document 1 is composed of an R unit to be held by a right hand of a player and an L unit to be held by a left hand of the player. The R unit and the L unit each has an operation button and a stick on the top surface and the side of a housing thereof. The R unit and the L unit can be physically coupled to each other so as to be used as a combined controller.

However, the controller disclosed in Patent Document 1 is constructed by simply separating a conventional game apparatus controller into right and left units. That is, although a player can place his or her right and left hands anywhere when the player holds the R and L units by his or her right and left hands, respectively, the player cannot control the controller itself with improved flexibility. For example, not only the combined controller but also the game apparatus controller separated into the right and the left units cannot realize a new operation.

SUMMARY OF THE INVENTION

Therefore, an object of the present invention is to provide a novel game controller and game system which realize a novel operation having enhanced flexibility by using a plurality of control units.

The present invention has the following features to attain the object mentioned above. The reference numerals and the like in the parentheses indicate the correspondence with the embodiment described below in order to aid in understanding the present invention and are not intended to limit, in any way, the scope of the present invention.

A first aspect of the present invention is directed to a game controller (**7**) for transmitting operation data to a computer (**30**) executing a game program. The game controller comprises: a first control unit (**70**); a second control unit (**76**); and a cable (**79**). The cable is flexible and electrically connects

between the first control unit and the second control unit. The first control unit includes a first operation data generation section (**74**, **701**). The first operation data generation section generates first operation data in accordance with a motion of a first control unit body included in the first control unit. The second control unit includes a second operation data generation section (**78**). The second operation data generation section generates second operation data in accordance with a direction input operation performed by a player. Further, one of the first control unit and the second control unit includes a transmission section (**75**). The transmission section transmits the first operation data and the second operation data to the computer at a predetermined timing.

In a second aspect based on the first aspect, the first operation data generation section includes an image pickup section (**74**). The image pickup section is fixed to the first control unit body and takes an image of a periphery along a predetermined direction from the first control unit body. The first operation data generation section outputs, as the first operation data, one selected from the group consisting of an image taken by the image pickup section and a result of subjecting the image taken by the image pickup section to a predetermined calculation.

In a third aspect based on the second aspect, the first operation data generation section further includes a positional information calculation section (**744**). The positional information calculation section calculates positional information indicating a position, in the image taken by the image pickup section, of at least one marker image which is included in the taken image and is used as an imaging target, when performing the predetermined calculation, and outputs the positional information as the first operation data.

In a fourth aspect based on the first aspect, the transmission section wirelessly transmits the first operation data and the second operation data to the computer.

In a fifth aspect based on the first aspect, the first operation data generation section has one of an acceleration sensor (**701**) and a gyro sensor included in the first control unit body. The first operation data generation section outputs data generated by the one of the acceleration sensor and the gyro sensor as the first operation data.

In a sixth aspect based on the first aspect, the cable is detachably connected to at least the first control unit. The transmission section is included in the first control unit.

In a seventh aspect based on the first aspect, the transmission section collects and transmits to the computer the first operation data and the second operation data at intervals shorter than 1/60 second.

In an eighth aspect based on the first aspect, the second operation data generation section includes a stick (**78***a*) which has a tip projecting from a second control unit body included in the second control unit and is inclinable on the second control unit body. The second operation data generation section outputs data obtained in accordance with an inclining direction of the stick as the second operation data.

In a ninth aspect based on the first aspect, the second operation data generation section includes an operation button (**78***f*) which has operation portions representing at least four directions and which is able to be pushed, by the operation portions, into a second control unit body included in the second control unit. The second operation data generation section outputs, as the second operation data, data corresponding to the operation portion at which the operation button is pushed.

In a tenth aspect based on the first aspect, the second operation data generation section includes a sliding member (**78***g*) which has a top surface exposed from a second control

unit body included in the second control unit and which is horizontally movable on the second control unit body. The second operation data generation section outputs data obtained in accordance with a horizontal moving direction of the sliding member as the second operation data.

In an eleventh aspect based on the first aspect, the second operation data generation section includes a touch pad (**78***h*) on an outer surface of a second control unit body included in the second control unit. The second operation data generation section outputs, as the second operation data, data obtained in accordance with a position on the touch pad at which the touch pad is touched.

In a twelfth aspect based on the first aspect, the second operation data generation section includes at least four operation buttons (**78***i*, **78***j*, **78***k*, **78***l*) which are able to be pushed into a second control unit body included in the second control unit. The second operation data generation section outputs data obtained in accordance with the pushed operation button as the second operation data.

In a thirteenth aspect based on the first aspect, the second control unit further includes one of an acceleration sensor (**761**) and a gyro sensor. One of the acceleration sensor and the gyro sensor is provided in a second control unit body included in the second control unit. The transmission section transmits, to the computer, data outputted by the one of the acceleration sensor and the gyro sensor as third operation data in addition to the first operation data and the second operation data.

In a fourteenth aspect based on the first aspect, at least one of the first control unit and the second control unit further includes a reception section (**75**), a speaker (**706**), and a sound control unit (**707**). The reception section receives transmission data transmitted from the computer. The sound control section generates a sound from the speaker using the transmission data having been received by the reception section.

A fifteenth aspect of the present invention is directed to a game controller for transmitting operation data to a computer executing a game program. The game controller comprises a first control unit, a second control unit, and a wireless connecting means. The wireless connecting means wirelessly connects between the first control unit and the second control unit. The first control unit includes a first operation data generation section. The first operation data generation section generates first operation data in accordance with a motion of a first control unit body included in the first control unit. The second control unit includes a second operation data generation section. The second operation data generation section generates second operation data in accordance with a direction input operation performed by a player. Further, one of the first control unit and the second control unit includes a transmission section. The transmission section transmits the first operation data and the second operation data to the computer at a predetermined timing.

In a sixteenth aspect based on the fifteenth aspect, the first operation data generation section includes an image pickup section. The image pickup section is fixed to the first control unit body and takes an image of a periphery along a predetermined direction from the first control unit body. The first operation data generation section outputs, as the first operation data, one selected from the group consisting of an image taken by the image pickup section and a result of subjecting the image taken by the image pickup section to a predetermined calculation.

In a seventeenth aspect based on the sixteenth aspect, the first operation data generation section further includes a positional information calculation section. The positional information calculation section calculates positional information indicating a position, in the image taken by the image pickup section, of at least one marker image which is included in the taken image and is used as an imaging target, when performing the predetermined calculation, and outputs the positional information as the first operation data.

In an eighteenth aspect based on the fifteenth aspect, the transmission section wirelessly transmits the first operation data and the second operation data to the computer.

In a nineteenth aspect based on the fifteenth aspect, the first operation data generation section has one of an acceleration sensor and a gyro sensor included in the first control unit body. The first operation data generation section outputs data generated by the one of the acceleration sensor and the gyro sensor as the first operation data.

In a twentieth aspect based on the fifteenth aspect, the transmission section collects and transmits to the computer the first operation data and the second operation data at intervals shorter than 1/60 second.

In a twenty-first aspect based on the fifteenth aspect, the second operation data generation section includes a stick which has a tip projecting from a second control unit body included in the second control unit and is inclinable on the second control unit body. The second operation data generation section outputs data obtained in accordance with an inclining direction of the stick as the second operation data.

In a twenty-second aspect based on the fifteenth aspect, the second operation data generation section includes an operation button (**78***f*) which has operation portions representing at least four directions and which is able to be pushed, by the operation portions, into a second control unit body included in the second control unit. The second operation data generation section outputs, as the second operation data, data corresponding to the operation portion at which the operation button is pushed.

In a twenty-third aspect based on the fifteenth aspect, the second operation data generation section includes a sliding member which has a top surface exposed from a second control unit body included in the second control unit and which is horizontally movable on the second control unit body. The second operation data generation section outputs data obtained in accordance with a horizontal moving direction of the sliding member as the second operation data.

In a twenty-fourth aspect based on the fifteenth aspect, the second operation data generation section includes a touch pad on an outer surface of a second control unit body included in the second control unit. The second operation data generation section outputs, as the second operation data, data obtained in accordance with a position on the touch pad at which the touch pad is touched.

In a twenty-fifth aspect based on the fifteenth aspect, the second operation data generation section includes at least four operation buttons which are able to be pushed into a second control unit body included in the second control unit. The second operation data generation section outputs data obtained in accordance with the pushed operation button as the second operation data.

In a twenty-sixth aspect based on the fifteenth aspect, the second control unit further includes one of an acceleration sensor and a gyro sensor. One of the acceleration sensor and the gyro sensor is provided in a second control unit body included in the second control unit. The transmission section transmits, to the computer, data outputted by the one of the acceleration sensor and the gyro sensor as third operation data in addition to the first operation data and the second operation data.

In a twenty-seventh aspect based on the fifteenth aspect, at least one of the first control unit and the second control unit

further includes a reception section (**75**), a speaker (**706**), and a sound control section (**707**). The reception section receives transmission data transmitted from the computer. The sound control section generates a sound from the speaker using the transmission data having been received by the reception section.

A twenty-eighth aspect of the present invention is directed to a game controller (**7**) for transmitting operation data to a computer (**30**) executing a game program. The game controller comprises: a first control unit (**70**); a second control unit (**76**); and a cable (**79**). The cable is flexible and electrically connects between the first control unit and the second control unit. The first control unit includes a first operation data generation section (**74**, **701**). The first operation data generation section generates first operation data in accordance with a motion of a first control unit body included in the first control unit. The second control unit includes a second operation data generation section (**761**). The second operation data generation section generates second operation data in accordance with a motion of a second control unit body included in the second control unit. Further, one of the first control unit and the second control unit includes a transmission section (**75**). The transmission section transmits the first operation data and the second operation data to the computer at a predetermined timing.

In a twenty-ninth aspect based on the twenty-eighth aspect, the first operation data generation section has one of a first acceleration sensor (**701**) and a first gyro sensor included in the first control unit body. The first operation data generation section outputs data generated by the one of the first acceleration sensor and the first gyro sensor as the first operation data. The second operation data generation section has one of a second acceleration sensor (**761**) and a second gyro sensor included in the second control unit body. The second operation data generation section outputs data generated by the one of the second acceleration sensor and the second gyro sensor as the second operation data.

In a thirtieth aspect based on the twenty-ninth aspect, the first control unit further includes a first key (**72**). The first key, which is provided on the first control unit body, generates first key operation data in accordance with a player pressing the first key. The second control unit further includes a second key (**78**). The second key, which is provided on the second control unit body, generates second key operation data in accordance with the player pressing the second key. The transmission section transmits, to the computer, the first key operation data and the second key operation data in addition to the first operation data and the second operation data.

In a thirty-first aspect based on the twenty-eighth aspect, the first operation data generation section includes an image pickup section (**74**). The image pickup section is fixed to the first control unit body and takes an image of a periphery along a predetermined direction from the first control unit body. The first operation data generation section outputs, as the first operation data, one selected from the group consisting of an image taken by the image pickup section and a result of subjecting the image taken by the image pickup section to a predetermined calculation. The second operation data generation section has one of a first acceleration sensor (**761**) and a first gyro sensor. One of the first acceleration sensor and the first gyro sensor is provided in the second control unit body. The second operation data generation section outputs data generated by the one of the first acceleration sensor and the first gyro sensor as the second operation data.

In a thirty-second aspect based on the thirty-first aspect, the first control unit further includes one of a second acceleration sensor (**701**) and a second gyro sensor. One of the second acceleration sensor and the second gyro sensor is provided in the first control unit body. The transmission section transmits, to the computer, data outputted by the one of the second acceleration sensor and the second gyro sensor as third operation data in addition to the first operation data and the second operation data.

In a thirty-third aspect based on the twenty-eighth aspect, at least one of the first control unit and the second control unit further includes a reception section (**75**), a speaker (**706**), and a sound control section (**707**). The reception section receives transmission data transmitted from the computer. The sound control section generates a sound from the speaker using the transmission data having been received by the reception section.

A thirty-fourth aspect of the present invention is directed to a game system (**1**) comprising the game controller and a game apparatus (**3**). The game controller is described in the first aspect. The game apparatus is communicably connected to the game controller, and includes a computer for representing a virtual game world on a display screen (**2**) by executing a game program. The game apparatus performs a game process in accordance with at least one of the first operation data transmitted from the first control unit and the second operation data transmitted from the second control unit.

In a thirty-fifth aspect based on the thirty-fourth aspect, the game apparatus causes a player character appearing in the virtual game world to perform an action in accordance with at least one of the first operation data transmitted from the game controller and the second operation data transmitted from the game controller.

A thirty-sixth aspect of the present invention is directed to a game system comprising the game controller and a game apparatus. The game controller is described in the fifteenth aspect. The game apparatus is communicably connected to the game controller and includes a computer for representing a virtual game world on a display screen by executing a game program. The game apparatus performs a game process in accordance with at least one of the first operation data transmitted from the first control unit and the second operation data transmitted from the second control unit.

In a thirty-seventh aspect based on the thirty-sixth aspect, the game apparatus causes a player character appearing in the virtual game world to perform an action in accordance with at least one of the first operation data transmitted from the game controller and the second operation data transmitted from the game controller.

A thirty-eighth aspect of the present invention is directed to a game system comprising the game controller and a game apparatus. The game controller is described in the twenty-eighth aspect. The game apparatus is communicably connected to the game controller and includes a computer for representing a virtual game world on a display screen by executing a game program. The game apparatus performs a game process in accordance with at least one of the first operation data transmitted from the first control unit and the second operation data transmitted from the second control unit.

In a thirty-ninth aspect based on the thirty-eighth aspect, the game apparatus causes a player character appearing in the virtual game world to perform an action in accordance with at least one of the first operation data transmitted from the game controller and the second operation data transmitted from the game controller.

According to the first aspect, the first control unit generates operation data in accordance with a motion of a controller body included in the game controller, and the second control unit generates operation data in accordance with a direction

input operation. Thereby, when the game controller is used in a game, a player can make an input with a finger of one hand as in the case of a conventional controller while moving the other hand. That is, the player can cause his or her right and left hands to perform respective separate operations, thereby providing a new operation, which cannot be conventionally performed. Further, by connecting two control units to each other by a cable, the game controller requires only one transmission section for a computer.

According to the thirteenth aspect, the first control unit generates operation data in accordance with a motion of a controller body included in the game controller, and the second control unit generates operation data in accordance with a direction input operation. Thereby, when the game controller is used in a game, a player can make an input with a finger of one hand as in the case of a conventional controller while moving the other hand. That is, the player can cause his or her right and left hands to perform respective separate operations, thereby providing a new operation, which cannot be conventionally performed. Further, two control units are completely separated from each other, thereby providing improved controllability and enabling two players to operate the game controller.

According to the second, third, sixteenth and seventeenth aspects, an image taken by the image pickup section fixed to the first control unit or information obtained from the taken image can be used as the operation data. For example, a direction and a position of the first control unit with respect to the imaging target can be calculated, whereby a game operation can be performed in accordance with the direction and the position of the unit.

According to the fourth or the eighteenth aspect, the game controller and the computer are wirelessly connected to each other, thereby providing improved controllability of the game controller.

According to the fifth or the nineteenth aspect, the acceleration sensor or the gyro sensor is used as the first operation data generation section, thereby reducing a cost.

According to the sixth aspect, the cable is eliminated from the first control unit, whereby the operation data can be transmitted to the computer using only the first control unit.

According to the seventh or the twentieth aspect, data can be collected and transmitted at intervals shorter than a typical game process cycle (1/60 second).

According to one of the eighth to the twelfth aspects, and the twenty-first to the twenty-fifth aspects, the second operation data generation section for outputting a signal in accordance with a direction input operation performed by a player can be realized by the inclinable stick, the button such as a cross key having portions to be pressed depending on a direction, the horizontally movable pad, the touch pad, the button representing each direction and the like.

According to the thirteenth aspect, each of the units outputs the operation data in accordance with the motion of the unit body. Therefore, a player can make an input with a finger of one hand as in the case of a conventional controller while moving the other hand, and further the player can hold the separate units with both hands, respectively, thereby moving both hands individually so as to make an input.

According to the fourteenth, twenty-seventh, and thirty-third aspects, the speaker included in one of the units outputs a sound in accordance with data from the computer, whereby the sound can be outputted near the hand with which the player holds the unit.

According to the twenty-eighth aspect, each of the first control unit and the second control unit generates operation data in accordance with a motion of the unit body. Therefore, when the game controller is used in a game, each of the units outputs the operation data in accordance with the motion of the unit body, whereby the player can hold the separate units with both hands, respectively, thereby moving both hands individually so as to make an input. That is, the player can cause his or her right and left hands to perform respective separate operations, thereby providing a new operation which cannot be conventionally performed. Further, by connecting two control units to each other by a cable, the game controller requires only one transmission section for a computer.

According to the twenty-ninth aspect, each of the units outputs the operation data in accordance with the tilt, attitude and the like of the unit body, and therefore the player holds separate units with both hands, respectively, thereby moving two hands individually so as to make an input.

According to the thirtieth aspect, each of the units not only outputs operation data in accordance with a tilt, an attitude and the like of the unit body but also outputs operation data in accordance with a player performing a key operation. Therefore, the player can hold the separate units with both hands, respectively, thereby moving both hands individually so as to make an input, and the player can also use his or her fingers of both hands so as to perform operations.

According to the thirty-first aspect, the first control unit can calculate a direction, a position and the like of the first control unit with respect to the imaging target, whereby an operation can be performed in accordance with the direction and the position of the first control unit with respect to the display device and the like. On the other hand, the second control unit can calculate a tilt, an attitude, a position and the like of the second control unit, whereby an operation can be performed in accordance with the attitude and the position of the second control unit.

According to the thirty-second aspect, the first control unit can also calculate a tilt, an attitude, a position and the like of the first control unit, whereby an operation can be performed in accordance with the attitude and the position of the first control unit.

Further, the game system according to the present invention can obtain the same effect as that of the aforementioned game controller.

These and other objects, features, aspects and advantages of the present invention will become more apparent from the following detailed description of the present invention when taken in conjunction with the accompanying drawings.

BRIEF DESCRIPTION OF THE DRAWINGS

FIG. **1** is an external view illustrating a game system **1** according to an embodiment of the present invention;

FIG. **2** is a functional block diagram of a game apparatus **3** shown in FIG. **1**;

FIG. **3** is a perspective view illustrating an outer appearance of a controller **7** shown in FIG. **1**;

FIG. **4** is a perspective view illustrating a state of a connecting cable **79** of the controller **7** shown in FIG. **3** being connected to or disconnected from a core unit **70**;

FIG. **5** is a perspective view of the core unit **70** shown in FIG. **3** as seen from the top rear side thereof;

FIG. **6** is a perspective view of the core unit **70** shown in FIG. **3** as seen from the bottom front side thereof;

FIG. **7** is a perspective view illustrating a state where an upper casing of the core unit **70** shown in FIG. **3** is removed;

FIG. **8** is a perspective view illustrating a state where a lower casing of the core unit **70** shown in FIG. **3** is removed;

FIG. **9** is a perspective view illustrating a first example of the subunit **76** shown in FIG. **3**;

FIG. **10** is a perspective view of a state where an upper casing of the subunit **76** shown in FIG. **9** is removed;

FIGS. **11**A, **11**B, and **11**C are a top view, a bottom view and a left side view of a second example of the subunit **76** shown in FIG. **3**, respectively;

FIG. **12** is a perspective view of the subunit **76** shown in FIG. **3** as seen from the top front side thereof;

FIG. **13** is a top view illustrating an example of a first modification of the subunit **76** shown in FIG. **3**;

FIG. **14** is a top view illustrating an example of a second modification of the subunit **76** shown in FIG. **3**;

FIG. **15** is a top view illustrating an example of a third modification of the subunit **76** shown in FIG. **3**;

FIG. **16** is a top view illustrating an example of a fourth modification of the subunit **76** shown in FIG. **3**;

FIG. **17** is a block diagram illustrating a structure of the controller **7** shown in FIG. **3**;

FIG. **18** is a diagram illustrating a state of a game being generally controlled with the controller **7** shown in FIG. **3**;

FIG. **19** shows an exemplary state of a player holding the core unit **70** with a right hand as seen from the front surface side of the core unit **70**;

FIG. **20** shows an exemplary state of a player holding the core unit **70** with a right hand as seen from the left side of the core unit **70**;

FIG. **21** is a diagram illustrating a viewing angle of a LED module **8**L, a viewing angle of a LED module **8**R, and a viewing angle of an image pickup element **743**;

FIG. **22** shows an exemplary state of a player holding the subunit **76** with a left hand as seen from the right side of the subunit **76**; and

FIG. **23** shows an exemplary game image displayed on the monitor **2** when the game apparatus **3** executes a shooting game.

DESCRIPTION OF THE PREFERRED EMBODIMENTS

With reference to FIG. **1**, a game system **1** according to one embodiment of the present invention will be described. FIG. **1** is an external view illustrating the game system **1**. In the following description, the game system **1** according to the present invention includes a stationary game apparatus.

As shown in FIG. **1**, the game system **1** includes a stationary game apparatus (hereinafter, referred to simply as a "game apparatus") **3**, which is connected to a display (hereinafter, referred to as a "monitor") **2** of a home-use television receiver or the like having a speaker **2***a* via a connection cord, and a controller **7** for giving operation information to the game apparatus **3**. The game apparatus **3** is connected to a receiving unit **6** via a connection terminal. The receiving unit **6** receives transmission data which is wirelessly transmitted from the controller **7**. The controller **7** and the game apparatus **3** are connected to each other by wireless communication. On the game apparatus **3**, an optical disc **4** as an example of an exchangeable information storage medium is detachably mounted. The game apparatus **3** includes a power ON/OFF switch, a game process reset switch, and an OPEN switch for opening a top lid of the game apparatus **3** on a top main surface of the game apparatus **3**. When a player presses the OPEN switch, the lid is opened, so that the optical disc **4** can be mounted or dismounted.

Further, on the game apparatus **3**, an external memory card **5** is detachably mounted when necessary. The external memory card **5** has a backup memory or the like mounted thereon for fixedly storing saved data or the like. The game apparatus **3** executes a game program or the like stored on the optical disc **4** and displays the result on the monitor **2** as a game image. The game apparatus **3** can also reproduce a state of a game played in the past using saved data stored in the external memory card **5** and display the game image on the monitor **2**. A player playing with the game apparatus **3** can enjoy the game by operating the controller **7** while watching the game image displayed on the monitor **2**.

The controller **7** wirelessly transmits the transmission data from a communication section **75** included therein (described later) to the game apparatus **3** connected to the receiving unit **6**, using the technology of, for example, Bluetooth®. The controller **7** has two control units, a core unit **70** and a subunit **76**, connected to each other by a flexible connecting cable **79**. The controller **7** is an operation means for mainly operating a player object appearing in a game space displayed on the monitor **2**. The core unit **70** and the subunit **76** each includes an operation section such as a plurality of operation buttons, a key, a stick and the like. As described later in detail, the core unit **70** includes an imaging information calculation section **74** for taking an image viewed from the core unit **70**. As an example of an imaging target of the imaging information calculation section **74**, two LED modules **8**L and **8**R are provided in the vicinity of a display screen of the monitor **2**. The LED modules **8**L and **8**R each outputs infrared light forward from the monitor **2**. Although in the present embodiment the core unit **70** and the subunit **76** are connected to each other by the flexible cable, the subunit **76** may have a wireless unit, thereby eliminating the connecting cable **79**. For example, the subunit **76** has a Bluetooth® unit as the wireless unit, whereby the subunit **76** can transmit operation data to the core unit **70**.

Next, with reference to FIG. **2**, a structure of the game apparatus **3** will be described. FIG. **2** is a functional block diagram of the game apparatus **3**.

As shown in FIG. **2**, the game apparatus **3** includes, for example, a RISC CPU (central processing unit) **30** for executing various types of programs. The CPU **30** executes a boot program stored in a boot ROM (not shown) to, for example, initialize memories including a main memory **33**, and then executes a game program stored on the optical disc **4** to perform game process or the like in accordance with the game program. The CPU **30** is connected to a GPU (Graphics Processing Unit) **32**, the main memory **33**, a DSP (Digital Signal Processor) **34**, and an ARAM (audio RAM) **35** via a memory controller **31**. The memory controller **31** is connected to a controller I/F (interface) **36**, a video I/F **37**, an external memory I/F **38**, an audio I/F **39**, and a disc I/F **41** via a predetermined bus. The controller I/F **36**, the video I/F **37**, the external memory I/F **38**, the audio I/F **39** and the disc I/F **41** are respectively connected to the receiving unit **6**, the monitor **2**, the external memory card **5**, the speaker **2***a*, and a disc drive **40**.

The GPU **32** performs image processing based on an instruction from the CPU **30**. The GPU **32** includes, for example, a semiconductor chip for performing calculation process necessary for displaying 3D graphics. The GPU **32** performs the image process using a memory dedicated for image process (not shown) and a part of the storage area of the main memory **33**. The GPU **32** generates game image data and a movie to be displayed on the monitor **2** using such memories, and outputs the generated data or movie to the monitor **2** via the memory controller **31** and the video I/F **37** as necessary.

The main memory **33** is a storage area used by the CPU **30**, and stores a game program or the like necessary for processing performed by the CPU **30** as necessary. For example, the main memory **33** stores a game program read from the optical

disc **4** by the CPU **30**, various types of data or the like. The game program, the various types of data or the like stored in the main memory **33** are executed by the CPU **30**.

The DSP **34** processes sound data or the like generated by the CPU **30** during the execution of the game program. The DSP **34** is connected to the ARAM **35** for storing the sound data or the like. The ARAM **35** is used when the DSP **34** performs a predetermined process (for example, storage of the game program or sound data already read). The DSP **34** reads the sound data stored in the ARAM **35**, and outputs the sound data to the speaker **2***a* included in the monitor **2** via the memory controller **31** and the audio I/F **39**.

The memory controller **31** comprehensively controls data transmission, and is connected to the various I/Fs described above. The controller I/F **36** includes, for example, four controller I/Fs **36***a*, **36***b*, **36***c* and **36***d*, and communicably connects the game apparatus **3** to an external device which is engageable via connectors of the controller I/Fs **36***a*, **36***b*, **36***c* and **36***d*. For example, the receiving unit **6** is engaged with such a connector and is connected to the game apparatus via the controller I/F **36**. As described above, the receiving unit **6** receives the transmission data from the controller **7** and outputs the transmission data to the CPU **30** via the controller I/F **36**. The video I/F **37** is connected to the monitor **2**. The external memory I/F **38** is connected to the external memory card **5** and is accessible to a backup memory or the like provided in the external memory card **5**. The audio I/F **39** is connected to the speaker **2***a* built in the monitor **2** such that the sound data read by the DSP **34** from the ARAM **35** or sound data directly outputted from the disc drive **40** can be outputted from the speaker **2***a*. The disc I/F **41** is connected to the disc drive **40**. The disc drive **40** reads data stored at a predetermined reading position of the optical disc **4** and outputs the data to a bus of the game apparatus **3** or the audio I/F **39**.

Next, with reference to FIGS. **3** and **4**, the controller **7** will be described. FIG. **3** is a perspective view illustrating an outer appearance of the controller **7**. FIG. **4** is a perspective view illustrating a state of the connecting cable **79** of the controller **7** shown in FIG. **3** being connected to or disconnected from the core unit **70**.

As shown in FIG. **3**, the controller **7** includes the core unit **70** and the subunit **76** connected to each other by the connecting cable **79**. The core unit **70** has a housing **71** including a plurality of operation sections **72**. The subunit has a housing **77** including a plurality of operation sections **78**. The core unit **70** and the subunit **76** are connected to each other by the connecting cable **79**.

As shown in FIG. **4**, the connecting cable **79** has a connector **791** detachably connected to the connector **73** of the core unit **70** at one end thereof, and the connecting cable **79** is fixedly connected to the subunit **76** at the other end thereof. The connector **791** of the connecting cable **79** is engaged with the connector **73** provided at the rear surface of the core unit **70** so as to connect the core unit **70** and the subunit **76** to each other by the connecting cable **79**.

With reference to FIGS. **5** and **6**, the core unit **70** will be described. FIG. **5** is a perspective view of the core unit **70** as seen from the top rear side thereof. FIG. **6** is a perspective view of the core unit **70** as seen from the bottom front side thereof.

As shown in FIGS. **5** and **6**, the core unit **70** includes the housing **71** formed by plastic molding or the like. The housing **71** has a generally parallelepiped shape extending in a longitudinal direction from front to rear. The overall size of the housing **71** is small enough to be held by one hand of an adult or even a child.

At the center of a front part of a top surface of the housing **71**, a cross key **72***a* is provided. The cross key **72***a* is a cross-shaped four-direction push switch. The cross key **72***a* includes operation portions corresponding to the four directions (front, rear, right and left) represented by arrows, which are respectively located on cross-shaped projecting portions arranged at intervals of 90 degrees. The player selects one of the front, rear, right and left directions by pressing one of the operation portions of the cross key **72***a*. Through an operation on the cross key **72***a*, the player can, for example, instruct a direction in which a player character or the like appearing in a virtual game world is to move or a direction in which the cursor is to move.

Although the cross key **72***a* is an operation section for outputting an operation signal in accordance with the aforementioned direction input operation performed by the player, such an operation section may be provided in another form. For example, the cross key **72***a* may be replaced with a composite switch including a push switch including a ring-shaped four-direction operation section and a center switch provided at the center thereof. Alternatively, the cross key **72***a* may be replaced with an operation section which includes an inclinable stick projecting from the top surface of the housing **71** and outputs an operation signal in accordance with the inclining direction of the stick. Still alternatively, the cross key **72***a* may be replaced with an operation section which includes a disc-shaped member horizontally slidable and outputs an operation signal in accordance with the sliding direction of the disc-shaped member. Still alternatively, the cross key **72***a* may be replaced with a touch pad. Still alternatively, the cross key **72***a* may be replaced with an operation section which includes switches representing at least four directions (front, rear, right and left) and outputs an operation signal in accordance with the switch pressed by the player.

Behind the cross key **72***a* on the top surface of the housing **71**, a plurality of operation buttons **72***b*, **72***c*, **72***d*, **72***e*, **72***f* and **72***g* are provided. The operation buttons **72***b*, **72***c*, **72***d*, **72***e*, **72***f* and **72***g* are each an operation section for outputting a respective operation signal assigned to the operation buttons **72***b*, **72***c*, **72***d*, **72***e*, **72***f* or **72***g* when the player presses a head thereof. For example, the operation buttons **72***b*, **72***c*, and **72***d* are assigned with functions of a first button, a second button, and an A button. Further, the operation buttons **72***e*, **72***f* and **72***g* are assigned with functions of a minus button, a home button and a plus button, for example. The operation buttons **72***b*, **72***c*, **72***d*, **72***e*, **72***f* and **72***g* are assigned with respective functions in accordance with the game program executed by the game apparatus **3**, but this will not be described in detail because the functions are not directly relevant to the present invention. In an exemplary arrangement shown in FIG. **5**, the operation buttons **72***b*, **72***c* and **72***d* are arranged in a line at the center in the front-rear direction on the top surface of the housing **71**. The operation buttons **72***e*, **72***f* and **72***g* are arranged in a line in the left-right direction between the operation buttons **72***b* and **72***d* on the top surface of the housing **71**. The operation button **72***f* has a top surface thereof buried in the top surface of the housing **71**, so as not to be inadvertently pressed by the player.

In front of the cross key **72***a* on the top surface of the housing **71**, an operation button **72***h* is provided. The operation button **72***h* is a power switch for remote-controlling the power of the game apparatus **3** to be on or off. The operation button **72***h* also has a top surface thereof buried in the top surface of the housing **71**, so as not to be inadvertently pressed by the player.

Behind the operation button **72***c* on the top surface of the housing **71**, a plurality of LEDs **702** are provided. The con-

troller **7** is assigned a controller type (number) so as to be distinguishable from the other controllers **7**. For example, the LEDs **702** are used for informing the player of the controller type which is currently set to controller **7** that he or she is using. Specifically, when the core unit **70** transmits the transmission data to the receiving unit **6**, one of the plurality of LEDs **702** corresponding to the controller type is lit up.

On the top surface of the housing **71**, a sound hole for externally outputting a sound from a speaker **706** shown in FIG. **7**, which will be described below, is provided between the operation buttons **72***e*, **72***f*, and **72***g* and the operation button **72***b*.

On a bottom surface of the housing **71**, a recessed portion is formed. As described later in detail, the recessed portion is formed at a position at which an index finger or middle finger of the player is located when the player holds the core unit **70**. On a rear slope surface of the recessed portion, an operation button **72***i* is provided. The operation button **72***i* is an operation section acting as, for example, a B button. The operation button **72***i* is used, for example, as a trigger switch in a shooting game, or for attracting attention of a player object to a predetermined object.

On a front surface of the housing **71**, an image pickup element **743** included in the imaging information calculation section **74** is provided. The imaging information calculation section **74** is a system for analyzing image data taken by the core unit **70** and detecting for the centroid, the size and the like of an area having a high brightness in the image data. The imaging information calculation section **74** has, for example, a maximum sampling period of about 200 frames/sec., and therefore can trace and analyze even a relatively fast motion of the core unit **70**. The imaging information calculation section **74** will be described later in detail. On a rear surface of the housing **71**, the connector **73** is provided. The connector **73** is, for example, a 32-pin edge connector, and is used for engaging and connecting the core unit **70** with the connector **791** of the connecting cable **79**.

With reference to FIGS. **7** and **8**, an internal structure of the core unit **70** will be described. FIG. **7** is a perspective view illustrating, as seen from the rear side of the core unit **70**, a state where an upper casing (a part of the housing **71**) of the core unit **70** is removed. FIG. **8** is a perspective view illustrating, as seen from the front side of the core unit **70**, a state where a lower casing (a part of the housing **71**) of the core unit **70** is removed. FIG. **8** is a perspective view illustrating a reverse side of a substrate **700** shown in FIG. **7**.

As shown in FIG. **7**, the substrate **700** is fixed inside the housing **71**. On a top main surface of the substrate **700**, the operation buttons **72***a*, **72***b*, **72***c*, **72***d*, **72***e*, **72***f*, **72***g* and **72***h*, an acceleration sensor **701**, the LEDs **702**, an antenna **754** and the like are provided. These elements are connected to a micro computer **751** (see FIGS. **8** and **17**) and the like via lines (not shown) formed on the substrate **700** and the like. The wireless module **753** not shown (see FIG. **17**) and the antenna **754** allow the core unit **70** to act as a wireless controller. The quartz oscillator **703** not shown, which is provided in the housing **71**, generates a reference clock of the micro computer **751** described later. On the top main surface of the substrate **700**, the speaker **706** and an amplifier **708** are provided. The acceleration sensor **701** is provided near the edge of the substrate **700** offset from the center thereof. Therefore, a change of a direction of the gravitational acceleration and an acceleration containing a centrifugal force component can be detected based on a rotation of the core unit **70** about the longitudinal direction thereof, so that a predetermined calculation is used to determine the rotation of the core unit **70** with favorable accuracy based on the acceleration data having been detected.

As shown in FIG. **8**, at a front edge of a bottom main surface of the substrate **700**, the imaging information calculation section **74** is provided. The imaging information calculation section **74** includes an infrared filter **741**, a lens **742**, the image pickup element **743** and an image processing circuit **744** located in this order from the front surface of the core unit **70** on the bottom main surface of the substrate **700**. At a rear edge of the bottom main surface of the substrate **700**, the connector **73** is attached. Further, a sound IC **707** and the micro computer **751** are provided on the bottom main surface of the substrate **700**. The sound IC **707**, which is connected to the micro computer **751** and the amplifier **708** via lines formed on the substrate **700** and the like, outputs a sound signal to the speaker **706** via the amplifier **708** based on the sound data transmitted from the game apparatus **3**. On the bottom main surface of the substrate **700**, a vibrator **704** is provided. The vibrator **704** is, for example, a vibration motor or a solenoid. The core unit **70** is vibrated by an actuation of the vibrator **704**, and the vibration is conveyed to the player's hand holding the core unit **70**. Thus, a so-called vibration-feedback game is realized. The vibrator **704** is disposed slightly toward the front of the housing **71**, thereby allowing the housing **71** held by the player to strongly vibrate, that is, allowing the player to easily feel the vibration.

With reference to FIGS. **9** to **12**, the subunit **76** will be described. FIG. **9** is a perspective view illustrating a first example of the subunit **76**. FIG. **10** is a perspective view illustrating a state where an upper casing (a part of the housing **77**) of the subunit **76** shown in FIG. **9** is removed. FIG. **11**A is a top view illustrating a second example of the subunit **76**. FIG. **11**B is a bottom view illustrating the second example of the subunit **76**. FIG. **11**C is a left side view illustrating the second example of the subunit **76**. FIG. **12** is a perspective view illustrating the second example of the subunit **76** as seen from the top front side thereof.

As shown in FIG. **9**, the subunit **76** includes the housing **77** formed by, for example, plastic molding. The housing **77** extends in a longitudinal direction from front to rear, and has a streamline solid shape including a head which is a widest portion in the subunit **76**. The overall size of the subunit **76** is small enough to be held by one hand of an adult or even a child.

In the vicinity of the widest portion on the top surface of the housing **77**, a stick **78***a* is provided. The stick **78***a* is an operation section which includes an inclinable stick projecting from the top surface of the housing **77** and outputs an operation signal in accordance with the inclining direction of the stick. For example, a player can arbitrarily designate a direction and a position by inclining a tip of the stick in any direction of 360 degrees, whereby the player can instruct a direction in which a player character or the like appearing in a virtual game world is to move, or can instruct a direction in which a cursor is to move.

In front of the housing **77** of the subunit **76**, a plurality of operation buttons **78***d* and **78***e* are provided. The operation buttons **78***d* and **78***e* are each an operation section for outputting a respective operation signal assigned to the operation buttons **78***d* and **78***e* when the player presses a head thereof. For example, the operation buttons **78***d* and **78***e* are assigned with functions of an X button and a Y button, for example. Although the operation buttons **78***d* and **78***e* are assigned with respective functions in accordance with the game program executed by the game apparatus **3**, this will not be described in detail because the functions are not directly relevant to the

present invention. In an exemplary arrangement shown in FIG. **9**, the operation buttons **78***d* and **78***e* are aligned from the top to bottom on the front surface of the housing **77**.

In FIG. **10**, a substrate is fixed in the housing **77**. The stick **78***a*, an acceleration sensor **761** and the like are provided on the top main surface of the substrate. The stick **78***a*, the acceleration sensor **761** and the like are connected to the connecting cable **79** via lines (not shown) formed on the substrate and the like.

As shown in FIGS. **11**A, **11**B, **11**C and **12**, the subunit **76** of the second example includes the housing **77**, the stick **78***a*, the operation buttons **78***d* and **78***e* as in the case of the subunit **76** of the first example, and the subunit **76** of the second example has the operation buttons **78***b* and **78***c* on the top surface of the housing **77**.

Behind the stick **78***a* on the top surface of the housing **77**, the subunit **76** of the second example has a plurality of operation buttons **78***b* and **78***c*. The operation buttons **78***b* and **78***c* are each an operation section for outputting a respective operation signal assigned to the operation buttons **78***b* and **78***c* when the player presses a head thereof. The operation buttons **78***b* and **78***c* are assigned with respective functions in accordance with the game program executed by the game apparatus **3**. However, this will not be described in detail because the functions are not directly relevant to the present invention. In an exemplary arrangement shown in FIGS. **11**A, **11**B, **11**C and **12**, the operation buttons **78***b* and **78***c* are arranged in a line at the center of the top surface of the housing **77** in the left-right direction.

Although the stick **78***a* is an operation section for outputting an operation signal in accordance with a direction input operation performed by the player as described above, such an operation section may be provided in another form. Hereinafter, with reference to FIGS. **13** to **16**, a first through a fifth exemplary modifications, each of which includes the subunit **76** of the second example having an operation section for outputting an operation signal in accordance with the direction input operation, will be described.

As the first exemplary modification, as shown in FIG. **13**, the subunit **76** may include a cross key **78***f* similar to the cross key **72***a* of the core unit **70** instead of the stick **78***a*. As the second exemplary modification, as shown in FIG. **14**, the subunit **76** may include a slide pad **78***g* which includes a disc-shaped member horizontally slidable and outputs an operation signal in accordance with the sliding direction of the disc-shaped member, instead of the stick **78***a*. As the third exemplary modification, as shown in FIG. **15**, the subunit **76** may include a touch pad **78***h* instead of the stick **78***a*. As the fourth exemplary modification, as shown in FIG. **16**, the subunit **76** may include an operation section which has buttons **78***i*, **78***j*, **78***k*, and **78***l* representing at least four directions (front, rear, right and left), respectively, and outputs an operation signal in accordance with the button (**78***i*, **78***j*, **78***k*, or **78***l*) pressed by a player, instead of the stick **78***a*. As the fifth exemplary modification, the subunit **76** may include a composite switch including a push switch having a ring-shaped four-direction operation section and a center switch provided at the center thereof, instead of the stick **78***a*.

Next, with reference to FIG. **17**, an internal structure of the controller **7** will be described. FIG. **17** is a block diagram illustrating the structure of the controller **7**.

As shown in FIG. **17**, the core unit **70** includes the communication section **75** in addition to the operation section **72**, the imaging information calculation section **74**, the acceleration sensor **701**, the speaker **706**, the sound IC **707**, and the amplifier **708** as described above. Further, the subunit **76**, which has the operation section **78** and the acceleration sensor **761** as described above, is connected to the micro computer **751** via the connecting cable **79** and the connectors **791** and **73**.

The imaging information calculation section **74** includes the infrared filter **741**, the lens **742**, the image pickup element **743** and the image processing circuit **744**. The infrared filter **741** allows only infrared light to pass therethrough, among light incident on the front surface of the core unit **70**. The lens **742** collects the infrared light which has passed through the infrared filter **741** and outputs the infrared light to the image pickup element **743**. The image pickup element **743** is a solid-state imaging device such as, for example, a CMOS sensor or a CCD. The image pickup element **743** takes an image of the infrared light collected by the lens **742**. Accordingly, the image pickup element **743** takes an image of only the infrared light which has passed through the infrared filter **741** and generates image data. The image data generated by the image pickup element **743** is processed by the image processing circuit **744**. Specifically, the image processing circuit **744** processes the image data obtained from the image pickup element **743**, identifies a spot thereof having a high brightness, and outputs process result data representing the identified position coordinates and size of the area to the communication section **75**. The imaging information calculation section **74** is fixed to the housing **71** of the core unit **70**. The imaging direction of the imaging information calculation section **74** can be changed by changing the direction of the housing **71**. The housing **71** is connected to the subunit **76** by the flexible connecting cable **79**, and therefore the imaging direction of the imaging information calculation section **74** is not changed by changing the direction and position of the subunit **76**. As described later in detail, a signal can be obtained in accordance with the position and the motion of the core unit **70** based on the process result data outputted by the imaging information calculation section **74**.

The core unit **70** preferably includes a three-axis acceleration sensor **701**. Further, the subunit **76** preferably includes a three-axis acceleration sensor **761**. The three axis acceleration sensors **701** and **761** each detects for a linear acceleration in three directions, i.e., the up/down direction, the left/right direction, and the forward/backward direction. Alternatively, a two axis acceleration detection means which detects for only a linear acceleration along each of the up/down and left/right directions (or other pair of directions) may be used in another embodiment depending on the type of control signals used in the game process. For example, the three axis acceleration sensors **701** and **761** or the two axis acceleration sensors **701** and **761** may be of the type available from Analog Devices, Inc. or STMicroelectronics N.V. Preferably, each of the acceleration sensors **701** and **761** is of an electrostatic capacitance (capacitance-coupling) type that is based on silicon micro-machined MEMS (Micro Electro Mechanical Systems) technology. However, any other suitable acceleration detection technology (e.g., piezoelectric type or piezoresistance type) now existing or later developed may be used to provide the three axis acceleration sensors **701** and **761** or two axis acceleration sensors **701** and **761**.

As one skilled in the art understands, the acceleration detection means, as used in the acceleration sensors **701** and **761**, are capable of detecting for only acceleration (linear acceleration) along a straight line corresponding to each axis of the acceleration sensor. In other words, each of the direct outputs of the acceleration sensors **701** and **761** is limited to signals indicative of linear acceleration (static or dynamic) along each of the two or three axes thereof. As a result, the acceleration sensors **701** and **761** cannot directly detect movement along a non-linear (e.g. arcuate) path, rotation,

rotational movement, angular displacement, tilt, position, attitude or any other physical characteristic.

However, through additional processing of the acceleration signals output from each of the acceleration sensors **701** and **761**, additional information relating to the core unit **70** and the subunit **76** can be inferred or calculated, as one skilled in the art will readily understand from the description herein. For example, by detecting static acceleration (i.e., gravity), the outputs of the acceleration sensors **701** and **761** can be used to infer tilt of the object (core unit **70** or subunit **76**) relative to the gravity vector by correlating tilt angles with detected acceleration. In this way, the acceleration sensors **701** and **761** can be used in combination with the micro computer **751** (or another processor) to determine tilts, attitudes or positions of the core unit **70** and the subunit **76**. Similarly, various movements and/or positions of the core unit **70** and the subunit **76** can be calculated or inferred through processing of the acceleration signals generated by the acceleration sensors **701** and **761** when the core unit **70** containing the acceleration sensor **701** or the subunit **76** containing the acceleration sensor **761** is subjected to dynamic accelerations by, for example, the hand of a user, as described herein. In another embodiment, each of the acceleration sensors **701** and **761** may include an embedded signal processor or other type of dedicated processor for performing any desired processing of the acceleration signals outputted from the acceleration detection means prior to outputting signals to micro computer **751**. For example, the embedded or dedicated processor could convert the detected acceleration signal to a corresponding tilt angle when the acceleration sensor is intended to detect static acceleration (i.e., gravity). Data representing the acceleration detected by each of the acceleration sensors **701** and **761** is outputted to the communication section **75**.

In another exemplary embodiment, at least one of the acceleration sensors **701** and **761** may be replaced with a gyro-sensor of any suitable technology incorporating, for example, a rotating or vibrating element. Exemplary MEMS gyro-sensors that may be used in this embodiment are available from Analog Devices, Inc. Unlike the acceleration sensors **701** and **761**, a gyro-sensor is capable of directly detecting rotation (or angular rate) around at least one axis defined by the gyroscopic element therein. Thus, due to the fundamental differences between a gyro-sensor and an acceleration sensor, corresponding changes need to be made to the processing operations that are performed on the output signals from these devices depending on which device is selected for a particular application.

More specifically, when the tilt or attitude is calculated using a gyro-sensor instead of the acceleration sensor, significant changes are necessary. Specifically, when using a gyro-sensor, the value of the tilt is initialized at the start of the detection. Then, data on the angular rate which is output from the gyro-sensor is integrated. Next, a change amount in tilt from the value of the tilt initialized is calculated. In this case, the calculated tilt corresponds to an angle. In contrast, when the acceleration sensor calculates the tilt, the tilt is calculated by comparing the value of the gravitational acceleration of each axial component with a predetermined reference. Therefore, the calculated tilt can be represented as a vector. Thus, without initialization, an absolute direction can be determined with an acceleration detection means. The type of the value calculated as the tilt is also very different between a gyro sensor and an acceleration sensor; i.e., the value is an angle when a gyro sensor is used and is a vector when an acceleration sensor is used. Therefore, when a gyro sensor is used instead of an acceleration sensor or vice versa, data on tilt also needs to be processed through a predetermined conversion taking into account the fundamental differences between these two devices. Due to the fact that the nature of gyroscopes is known to one skilled in the art, as well as the fundamental differences between the acceleration detection means and the gyroscope, further details are not provided herein. While a gyro-sensor is advantageous in that a rotation can be directly detected, an acceleration sensor is generally more cost effective when used in connection with the controller described herein.

The communication section **75** includes the micro computer **751**, a memory **752**, the wireless module **753** and the antenna **754**. The micro computer **751** controls the wireless module **753** for wirelessly transmitting the transmission data while using the memory **752** as a storage area during the process. Further, the micro computer **751** controls the sound IC **707** and the vibrator **704** based on data from the game apparatus **3** having been received by the wireless module **753** via the antenna **754**. The sound IC **707** processes sound data transmitted from the game apparatus **3** via the communication section **75**, and the like.

Data from the core unit **70** including an operation signal (core key data) from the operation section **72**, acceleration signals (core acceleration data) from the acceleration sensor **701**, and the process result data from the imaging information calculation section **74** are outputted to the micro computer **751**. An operation signal (sub key data) from the operation section **78** of the subunit **76** and acceleration signals (sub acceleration data) from the acceleration sensor **761** are outputted to the micro computer **751** via the connecting cable **79**. The micro computer **751** temporarily stores the input data (core key data, sub key data, core acceleration data, sub acceleration data, and process result data) in the memory **752** as the transmission data which is to be transmitted to the receiving unit **6**. The wireless transmission from the communication section **75** to the receiving unit **6** is performed periodically at a predetermined time interval. Since game process is generally performed at a cycle of 1/60 sec., data needs to be collected and transmitted at a cycle of a shorter time period. Specifically, the game process unit is 16.7 ms (1/60 sec.), and the transmission interval of the communication section **75** structured using the Bluetooth® technology is 5 ms. At the transmission timing to the receiving unit **6**, the micro computer **751** outputs the transmission data stored in the memory **752** as a series of operation information to the wireless module **753**. The wireless module **753** uses, for example, the Bluetooth® technology to modulate the operation information onto a carrier wave of a predetermined frequency, and radiates the low power radio wave signal from the antenna **754**. Thus, the core key data from the operation section **72** included in the core unit **70**, the sub key data from the operation section **78** included in the subunit **76**, the core acceleration data from the acceleration sensor **701** included in the core unit **70**, the sub acceleration data from the acceleration sensor **761** included in the subunit **76**, and the process result data from the imaging information calculation section **74** are modulated onto the low power radio wave signal by the wireless module **753** and radiated from the core unit **70**. The receiving unit **6** of the game apparatus **3** receives the low power radio wave signal, and the game apparatus **3** demodulates or decodes the low power radio wave signal to obtain the series of operation information (the core key data, the sub key data, the core acceleration data, the sub acceleration data and the process result data). Based on the obtained operation information and the game program, the CPU **30** of the game apparatus **3** performs the game process. In the case where the communication section **75** is structured using the Bluetooth®

technology, the communication section **75** can have a function of receiving transmission data which is wirelessly transmitted from other devices.

As shown in FIG. **18**, in order to play a game using the controller **7** with the game system **1**, a player holds the core unit **70** with one hand (for example, a right hand) (see FIGS. **19** and **20**), and holds the subunit **76** with the other hand (for example, a left hand) (see FIG. **22**). The player holds the core unit **70** so as to point the front surface of the core unit **70** (that is, a side having an entrance through which light is incident on the imaging information calculation section **74** taking an image of the light) to the monitor **2**. On the other hand, two LED modules **8**L and **8**R are provided in the vicinity of the display screen of the monitor **2**. The LED modules **8**L and **8**R each outputs infrared light forward from the monitor **2**.

When a player holds the core unit **70** so as to point the front surface thereof to the monitor **2**, infrared lights outputted by the two LED modules **8**L and **8**R are incident on the imaging information calculation section **74**. The image pickup element **743** takes images of the infrared lights incident through the infrared filter **741** and the lens **742**, and the image processing circuit **744** processes the taken images. The imaging information calculation section **74** detects infrared components outputted by the LED modules **8**L and **8**R so as to obtain positions and area information of the LED modules **8**L and **8**R. Specifically, the imaging information calculation section **74** analyzes image data taken by the image pickup element **743**, eliminates images which do not represent the infrared lights outputted by the LED modules **8**L and **8**R from the area information, and identifies points each having a high brightness as positions of the LED modules **8**L and **8**R. The imaging information calculation section **74** obtains position coordinates, coordinates of the centroid, and the like of each of the identified points having the high brightness and outputs the same as the process result data. When such process result data is transmitted to the game apparatus **3**, the game apparatus **3** can obtain, based on the position coordinates and the coordinates of the centroid, operation signals relating to the motion, attitude, position and the like of the imaging information calculation section **74**, that is, the core unit **70**, with respect to the LED modules **8**L and **8**R. Specifically, the position having a high brightness in the image obtained through the communication section **75** is changed in accordance with the motion of the core unit **70**, and therefore a direction input or coordinate input is performed in accordance with the position having the high brightness being changed, thereby enabling a direction input or a coordinate input to be performed along the moving direction of the core unit **70**.

Thus, the imaging information calculation section **74** of the core unit **70** takes images of stationary markers (infrared lights from the two LED modules **8**L and **8**R in the present embodiment), and therefore the game apparatus **3** can use the process result data relating to the motion, attitude, position and the like of the core unit **70** in the game process, whereby an operation input, which is different from an input made by pressing an operation button or using an operation key, is further intuitively performed. As described above, since the markers are provided in the vicinity of the display screen of the monitor **2**, the motion, attitude, position and the like of the core unit **70** with respect to the display screen of the monitor **2** can be easily calculated based on positions from the markers. That is, the process result data used for obtaining the motion, attitude, position and the like of the core unit **70** can be used as operation input immediately applied to the display screen of the monitor **2**.

With reference to FIGS. **19** and **20**, a state of a player holding the core unit **70** with one hand will be described. FIG. **19** shows an exemplary state of a player holding the core unit **70** with a right hand as seen from the front surface side of the core unit **70**. FIG. **20** shows an exemplary state of a player holding the core unit **70** with a right hand as seen from the left side of the core unit **70**.

As shown in FIGS. **19** and **20**, the overall size of the core unit **70** is small enough to be held by one hand of an adult or even a child. When the player puts a thumb on the top surface of the core unit **70** (for example, near the cross key **72***a*), and puts an index finger in the recessed portion on the bottom surface of the core unit **70** (for example, near the operation button **72***i*), the light entrance of the imaging information calculation section **74** on the front surface of the core unit **70** is exposed forward to the player. It should be understood that also when the player holds the core unit **70** with a left hand, the holding state is the same as that described for the right hand.

Thus, the core unit **70** allows a player to easily operate the operation section **72** such as the cross key **72***a* or the operation button **72***i* while holding the core unit **70** with one hand. Further, when the player holds the core unit **70** with one hand, the light entrance of the imaging information calculation section **74** on the front surface of the core unit **70** is exposed, whereby the light entrance can easily receive infrared lights from the aforementioned two LED modules **8**L and **8**R. That is, the player can hold the core unit **70** with one hand without preventing the imaging information calculation section **74** from functioning. That is, when the player moves his or her hand holding the core unit **70** with respect to the display screen, the core unit **70** can further perform an operation input enabling a motion of the player's hand to directly act on the display screen.

As shown in FIG. **21**, the LED modules **8**L and **8**R each has a viewing angle θ**1**. The image pickup element **743** has a viewing angle θ**2**. For example, the viewing angle θ**1** of the LED modules **8**L and **8**R is 34 degrees (half-value angle), and the viewing angle θ**2** of the image pickup element **743** is 41 degrees. When both the LED modules **8**L and **8**R are in the viewing angle θ**2** of the image pickup element **743**, and the image pickup element **743** is in the viewing angle θ**1** of the LED module **8**L and the viewing angle θ**1** of the LED module **8**R, the game apparatus **3** determines a position of the core unit **70** using positional information relating to the point having high brightness of the two LED modules **8**L and **8**R.

When either the LED module **8**L or LED module **8**R is in the viewing angle θ**2** of the image pickup element **743**, or when the image pickup element **743** is in either the viewing angle θ**1** of the LED module **8**L or the viewing angle θ**1** of the LED module **8**R, the game apparatus **3** determines a position of the core unit **70** using the positional information relating to the point having high brightness of the LED module **8**L or the LED module **8**R.

As described above, the tilt, attitude or position of the core unit **70** can be determined based on the output (core acceleration data) from the acceleration sensor **701** of the core unit **70**. That is, the core unit **70** functions as an operation input means for performing an operation in accordance with a player moving a hand holding the core unit **70**, for example, upward, downward, leftward, or rightward.

Next, with reference to FIG. **22**, a state of a player holding the subunit **76** with one hand will be described. FIG. **22** shows an exemplary state of a player holding the subunit **76** with a left hand as seen from the right side of the subunit **76**.

As shown in FIG. **22**, the overall size of the subunit **76** is small enough to be held by one hand of an adult or even a child. For example, a player can put a thumb on the top surface of the subunit **76** (for example, near the stick **78***a*), put

an index finger on the front surface of the subunit **76** (for example, near the operation buttons **78***d* and **78***e*), and put a middle finger, a ring finger and a little finger on the bottom surface of the subunit **76** so as to hold the subunit **76**. It should be understood that also when the player holds the subunit **76** with a right hand, the holding state is similar to that described for the left hand. Thus, the subunit **76** allows the player to easily operate the operation section **78** such as the stick **78***a* and the operation buttons **78***d* and **78***e* while holding the subunit **76** with one hand.

As described above, the tilt, attitude or position of the subunit **76** can be determined based on the output (sub acceleration data) from the acceleration sensor **761** of the subunit **76**. That is, the subunit **76** functions as an operation input means for performing an operation in accordance with the player moving a hand holding the subunit **76**, for example, upward, downward, leftward, and rightward.

Here, an exemplary game played using the aforementioned controller **7** will be described. As a first example, a shooting game played using the controller **7** will be described. FIG. **23** is a diagram illustrating an exemplary game image displayed on the monitor **2** when the game apparatus **3** executes the shooting game.

As shown in FIG. **23**, a portion of a three-dimensional virtual game space S is displayed on the display screen of the monitor **2**. As a game object acting in accordance with an operation of the controller **7**, a portion of the player character P and a portion of a gun G held by the player character P are displayed on the display screen. Moreover, the virtual game space S displayed on the display screen represents a field of front vision of the player character P, and for example an opponent character E is displayed as a shooting target in FIG. **23**. A target indicating a position at which the player character P shoots the gun G is displayed on the display screen as the target cursor T.

In the shooting game having such a game image displayed on the monitor **2**, a player operates the core unit **70** with one hand and operates the subunit **76** with the other hand as shown in FIG. **18** so as to play the game. For example, when the player inclines the stick **78***a* (see FIGS. **11**A, **11**B, **11**C and **12**) on the subunit **76**, the player character P is moved in the virtual game space S in accordance with the inclining direction. Further, when the player moves his or her hand holding the core unit **70** with respect to the display screen, the target cursor T is moved in accordance with the motion, attitude, position and the like of the core unit **70** with respect to the monitor **2** (LED modules **8**L and **8**R). When the player presses the operation button **72***i* (shown in FIG. **6**) on the core unit **70**, the player character P shoots the gun G at the target cursor T.

That is, while the player uses the stick **78***a* on the subunit **76** so as to instruct the player character P to move, the player can operate the core unit **70** as if the core unit **70** is a gun for the shooting game, thereby enhancing enjoyment in playing a shooting game. The player can perform an operation of moving the player character P and an operation of moving the target cursor T by using respective units held by different hands, whereby the player can perform the respective operations as independent ones. For example, since the virtual game space S displayed on the display screen is changed in accordance with the movement of the player character P, it is sometimes difficult to keep the target positioned near a position observed by the player in the virtual game space S because, for example, the player may be paying attention to the opponent character E suddenly jumping into the virtual game space S. However, while the player is moving the player character P with one hand (for example, a thumb of a left hand), the player can control a motion of the arm (for example, a right arm) which is not used for moving the player character P such that the core unit **70** has its front surface pointed to the observed position, thereby substantially enhancing flexibility for operating the controller **7** and increasing the reality of the shooting game. Further, in order to move the target cursor T, the player moves the controller. However, the operation of moving the controller does not hinder the player from performing a direction instruction operation for moving the player character P, thereby enabling the player to stably perform the two direction instruction operations. That is, by using the controller **7**, the player can freely use his or her left and right hands and can perform a new operation having increased flexibility, which cannot be achieved using a physically single controller.

In a second example, a player inclines the stick **78***a* on the subunit **76** so as to move the player character P in the virtual game space S in accordance with the inclining direction as in the first example. The player moves a hand holding the core unit **70** with respect to the display screen so as to move a sight point of a virtual camera in accordance with a position of the core unit **70** with respect to the monitor **2** (LED modules **8**L and **8**R). These operations allow the player to observe a position to which the core unit **70** is pointed in the virtual game space S while operating the stick **78***a* on the subunit **76** so as to instruct the player character P to move.

In the above description, the controller **7** and the game apparatus **3** are connected to each other by wireless communication. However, the controller **7** and the game apparatus **3** may be electrically connected to each other by a cable. In this case, the cable connected to the core unit **70** is connected to a connection terminal of the game apparatus **3**.

Moreover, in the present embodiment, only the core unit **70** among the core unit **70** and the subunit **76** of the controller **7** has the communication section **75**. However, the subunit **76** may have the communication section for wirelessly transmitting the transmission data to the receiving unit **6**. Further, both the core unit **70** and the subunit **76** may have the respective communication sections. For example, the respective communication sections included in the core unit **70** and the subunit **76** may wirelessly transmit the transmission data to the receiving unit **6**, or the communication section of the subunit **76** may wirelessly transmit the transmission data to the communication section **75** of the core unit **70**, and the communication section **75** of the core unit **70** may wirelessly transmit, to the receiving unit **6**, the received transmission data from the subunit **76** and the transmission data of the core unit **70**. In these cases, the connecting cable **79** for electrically connecting between the core unit **70** and the subunit **76** can be eliminated.

In the above description, the receiving unit **6** connected to the connection terminal of the game apparatus **3** is used as a receiving means for receiving transmission data which is wirelessly transmitted from the controller **7**. Alternatively, the receiving means may be a receiving module built in the game apparatus **3**. In this case, the transmission data received by the receiving module is outputted to the CPU **30** via a predetermined bus.

Although in the present embodiment the imaging information calculation section **74** included in the core unit **70** is described as an example of a determining section for outputting a signal (process result data) in accordance with a motion of the core unit **70** body, the imaging information calculation section **74** may be provided in another form. For example, the core unit **70** may include the acceleration sensor **701** as described above, or may include a gyro sensor. The acceleration sensor or the gyro sensor can be used to determine a

motion or attitude of the core unit **70**, and, therefore, can be used as a determining section for outputting a signal in accordance with the motion of the core unit **70** body using the detection signal for the motion or attitude. In this case, the imaging information calculation section **74** may be eliminated from the core unit **70**, or sensor and the imaging information calculation section can be used in combination.

Further, although in the present embodiment only the core unit **70** includes the imaging information calculation section **74**, the subunit **76** may also include a similar imaging information calculation section.

Further, when the controller **7** includes a plurality of units, each of which may have a plurality of operation means such as the imaging information calculation section, the acceleration sensor, the gyro sensor, the stick, the cross key, and the operation button, various combination of the operation means can realize various controllers. Here, the operation means included in the core unit **70** and the subunit **76** are classified into an operation means A and an operation means B. The operation means A, such as the imaging information calculation section **74**, the acceleration sensors **701** and **761**, and the gyro sensor, outputs a signal in accordance with the movement of the unit body. The operation means B, such as the stick, the cross key, the operation button, the touch pad, outputs a signal in accordance with the player pressing a button, tilting a component or touching the same.

When the core unit **70** includes the operation means A and the subunit **76** includes the operation means B, the player can move one hand holding the core unit **70** while the player makes an input with a finger of the other hand holding the subunit **76** as in the case of a conventional controller.

That is, the player can perform different operations with a right and a left hands, respectively, thereby realizing a new operation which cannot be performed by a conventional controller. In this case, according to the present invention, operation data outputted by the operation means A corresponds to first operation data, and operation data outputted by the operation means B corresponds to second operation data. Further, the controller may be constructed such that the subunit **76** may include the operation means A, the core unit **70** may include the operation means A, and the subunit **76** may include the operation means A and the operation means B. In this manner, the player can move both hands individually, thereby realizing an increasingly improved operation. In this case, according to the present invention, operation data outputted by the operation means A of the subunit **76** corresponds to third operation data.

Further, when the core unit **70** and the subunit **76** each includes the operation means A, the player can move one hand holding the core unit **70** while the player can move the other hand holding the subunit **76** so as to make an input. That is, the player can move a right and a left hands individually, thereby realizing a new operation which cannot be performed by a conventional controller. In this case, according to the present invention, operation data outputted by the respective operation means A of the core unit **70** and the subunit **76** correspond to first operation data and second operation data. Further, each of the core unit **70** and the subunit **76** may include both the operation means A and the operation means B. In this manner, the player can perform operations by moving both hands and using fingers of both hands, thereby realizing a new operation. In this case, according to the present invention, operation data outputted by the operation means B of the core unit **70** corresponds to first key operation data, and operation data outputted by the operation means B of the subunit **76** corresponds to second key operation data.

Furthermore, when each of the core unit **70** and the subunit **76** includes the operation means A, one of the core unit **70** or the subunit **76** may include various types of operation means A. As described above, when the operation means A includes the imaging information calculation section, a direction, a position and the like of the unit with respect to the imaging target (marker) can be calculated, thereby enabling an operation based on the direction and the position of the unit with respect to the monitor **2**. On the other hand, when the operation means A includes the acceleration sensor or the gyro sensor, a tilt, an attitude, a position and the like of the unit itself can be calculated, thereby enabling an operation based on the attitude and the position of the unit. Accordingly, when the core unit **70** includes the imaging information calculation section and one of the acceleration sensor or the gyro sensor, and the subunit **76** includes the acceleration sensor or the gyro sensor, the core unit **70** can perform the aforementioned two operations. In this case, according to the present invention, operation data outputted by the imaging information calculation section of the core unit **70** corresponds to first operation data, operation data outputted by the acceleration sensor or the gyro sensor of the subunit **76** corresponds to second operation data, and operation data outputted by the acceleration sensor or the gyro sensor of the core unit **70** corresponds to third operation data.

In the present embodiment, image data taken by the image pickup element **743** is analyzed so as to obtain position coordinates and the like of an image of infrared lights from the LED modules **8**L and **8**R, and the core unit **70** generates process result data from the obtained coordinates and the like and transmits the process result data to the game apparatus **3**. However, the core unit **70** may transmit data obtained in another process step to the game apparatus **3**. For example, the core unit **70** transmits to the game apparatus **3** image data taken by the image pickup element **743**, and the CPU **30** may perform the aforementioned analysis so as to obtain process result data. In this case, the image processing circuit **744** can be eliminated from the core unit **70**. Alternatively, the core unit **70** may transmit, to the game apparatus **3**, the image data having been analyzed halfway. For example, the core unit **70** transmits to the game apparatus **3** data indicating a brightness, a position, an area size and the like obtained from the image data, and the CPU **30** may perform the remaining analysis so as to obtain process result data.

Although in the present embodiment infrared lights from the two LED modules **8**L and **8**R are used as imaging targets of the imaging information calculation section **74** in the core unit **70**, the imaging target is not restricted thereto. For example, infrared light from one LED module or infrared lights from at least three LED modules provided in the vicinity of the monitor **2** may be used as the imaging target of the imaging information calculation section **74**. Alternatively, the display screen of the monitor **2** or another emitter (room light or the like) can be used as the imaging target of the imaging information calculation section **74**. When the position of the core unit **70** with respect to the display screen is calculated based on the positional relationship between the imaging target and the display screen of the monitor **2**, various emitters can be used as the imaging target of the imaging information calculation section **74**.

The aforementioned shapes of the core unit **70** and the subunit **76** are merely examples. Further, the shape, the number, setting position and the like of each of the operation section **72** of the core unit **70** and the operation section **78** of the subunit **76** are merely examples. Needless to say, even when the shape, the number, the setting position and the like of each of the core unit **70**, the subunit **76**, the operation

section **72**, and the operation section **78** are different from those described in the embodiment, the present invention can be realized. Further, the imaging information calculation section **74** (light entrance of the imaging information calculation section **74**) of the core unit **70** may not be positioned on the front surface of the housing **71**. The imaging information calculation section **74** may be provided on another surface at which light can be received from the exterior of the housing **71**.

Further, although the speaker **706**, the sound IC **707**, and the amplifier **708** as described above are included in the core unit **70**, any devices at hand capable of outputting a sound may be included in either the subunit **76** or the core unit **70**.

Thus, the controller of the present invention allows a player to operate both the core unit **70** and the subunit **76** included therein so as to enjoy a game. For example, the core unit **70** has a function of outputting a signal in accordance with a motion of the unit body including the imaging information calculation section **74** and the accelerator sensor **701**, and the subunit **76** has a function of outputting a signal in accordance with a direction input operation performed by the player. For example, when used is a controller into which the core unit **70** and the subunit **76** are integrated, the whole controller has to be moved so as to output a signal in accordance with the motion of the unit body, thereby exerting some influence on the direction input operation. Further, the integration of the core unit **70** and the subunit **76** causes the opposite influence, that is, flexibility, which is realized by separation between the core unit **70** and the subunit **76**, is substantially reduced. As another example, the core unit **70** may have a function of outputting a signal in accordance with a motion of the unit body including the imaging information calculation section **74** and the acceleration sensor **701**, and the subunit **76** may have a function of outputting a signal in accordance with the motion of the unit body including the acceleration sensor **761**. Therefore, the player can move both hands holding the different units individually so as to make an input. Accordingly, the core unit **70** and the subunit **76** can be separated into a right unit and a left unit as in the case of a conventional controller for the game apparatus, and simultaneously the core unit **70** and the subunit **76** allow the player to freely use his or her right and left hands, thereby providing the player with a new operation, which cannot be performed by the integrated controller. Further, the controller can be operated with substantially enhanced flexibility, thereby providing a player with a game operation having increased reality.

The game controller and the game system according to the present invention can realize an operation having increased flexibility, and are useful as a game controller which includes two independent units and is operated by a player holding the two independent units, a game system including the game controller, and the like.

While the invention has been described in detail, the foregoing description is in all aspects illustrative and not restrictive. It is understood that numerous other modifications and variations can be devised without departing from the scope of the invention.

What is claimed is:

1. A handheld electronic device usable to play a game, comprising:

an elongated housing, comprising:

a top surface, the top surface including a longitudinal axis centered on the top surface of the housing, and

a bottom surface being structurally dimensioned and shaped to configure the device to be operable by a hand of a user while the housing is cradled by the hand of the user;

an imaging device disposed in the housing to capture an image of a scene the user's hand aims the imaging device toward;

a button disposed on the longitudinal axis of the top surface of the housing, the button configured to be operable by a digit of the hand while the housing is cradled by the hand, the button being configured to provide a signal that invokes a home function when the button is operated; and

a touch-sensitive panel arranged on the top surface and being operable by touch,

at least the touch-sensitive panel producing output data, and at least a portion of the output data is used for providing gaming control.

2. A handheld electronic device usable to play a game, comprising:

an elongated housing, comprising at least:

a front surface,

a top surface, and

a bottom surface;

a home button positioned centrally, in a horizontal direction, on the top surface of the housing;

a touch-sensitive panel located between the home button and the front surface of the housing;

an imaging device disposed within the housing to capture an image of a scene in which the imaging device is being aimed towards; and

processing circuitry configured to process data in response to input made to at least the home button and/or the touch-sensitive panel, the processing circuitry operatively coupled to the imaging device and configured to generate image data from the image captured by the imaging device,

at least the touch-sensitive panel producing output data, and at least a portion of the output data is capable of providing gaming control.

3. The handheld electronic device according to claim **2**, wherein the home button is configured to be depressible by at least a digit of a user holding the housing.

4. The handheld electronic device according to claim **2**, wherein the home button is recessed in relation to the top surface of the housing.

5. The handheld electronic device according to claim **2**, wherein the home button is arranged between the touch-sensitive panel and a rear end of the housing, the rear end of the housing opposed to the front surface of the housing.

6. The handheld electronic device according to claim **2**, further comprising two additional buttons arranged laterally to each side of the home button on the top surface of the housing.

7. The handheld electronic device according to claim **2**, wherein the top surface of the housing is substantially rectangular shaped.

8. The handheld electronic device according to claim **2**, wherein the housing is substantially symmetrical along a longitudinal axis of the top surface of the housing.

9. The handheld electronic device according to claim **2**, wherein the housing further comprising an upper portion wherein the imaging device is located within the upper portion of the housing.

10. The handheld electronic device according to claim **9**, wherein the upper portion of the housing including at least the front surface, a portion of the top surface, and a portion of the bottom surface of the housing.

11. The handheld electronic device according to claim **2**, wherein both the touch-sensitive panel and the home button

are adapted to be operable by at least one digit of a hand of the user as the housing is being held.

12. The handheld electronic device according to claim **2**, further comprising a wireless transceiver located within the housing and operatively coupled to the processing circuitry, the wireless transceiver configured to conduct wireless communication.

13. The handheld electronic device according to claim **12**, wherein the wireless transceiver configured to execute short-distance wireless communication.

14. The handheld electronic device according to claim **12**, wherein the wireless transceiver including a Bluetooth wireless transceiver.

15. The handheld electronic device according to claim **12**, further comprising an output device configured to provide a user-detectable output in response to receiving a signal via the wireless transceiver.

16. The handheld electronic device according to claim **15**, wherein the output device includes a vibrational transducer configured to cause the handheld electronic device to vibrate based upon data contained in a signal received by the wireless transceiver.

17. The handheld electronic device according to claim **15**, wherein the output device includes an illuminating module illuminating at least a portion of the top surface of the housing based upon a signal received via the wireless transceiver.

18. The handheld electronic device according to claim **15**, wherein the output device includes an audio output device causing the handheld electronic device to output audio based upon data contained in a signal received by the wireless transceiver.

19. The handheld electronic device according to claim **2**, further comprising a position, attitude or orientation sensor.

20. The handheld electronic device according to claim **19**, wherein the position, attitude or orientation sensor includes an inertial sensor.

21. The handheld electronic device according to claim **20**, wherein the inertial sensor comprises an accelerometer.

22. The handheld electronic device according to claim **19**, wherein the position, attitude, or orientation sensor includes a gyro sensor.

23. The handheld electronic device according to claim **2**, further comprising an on/off button configured to invoke at least on/off power functionality.

24. The handheld electronic device according to claim **23**, wherein the on/off button is located near a front portion of the housing.

25. The handheld electronic device according to claim **23**, wherein the processing circuitry is configured to receive and process signals from the on/off button.

26. The handheld electronic device according to claim **2**, further comprising a connector located near a rear portion of the housing, the connector configured to connect the handheld electronic device to another device.

27. The handheld electronic device according to claim **2**, wherein the imaging device is a charge-coupled device (CCD).

28. The handheld electronic device according to claim **2**, wherein the imaging device is a CMOS sensor.

29. A handheld electronic device usable to play a game, comprising:

a housing having at least a top surface that is substantially oblong shaped;

at least one wireless transceiver located within the housing of the handheld electronic device;

a touch-sensitive panel located on the top surface of the housing;

a vibration device configured to provide vibration-feedback by actuating the handheld electronic device based upon data contained in a signal received by the wireless transceiver;

a button configured to invoke a home function in response to an input operation, the button being arranged centrally at the top surface between two long edges of the oblong shaped housing; and

an imaging device configured to capture an image of one or more objects,

at least the touch-sensitive panel producing output data, and at least a portion of the output data is capable of providing gaming control.

30. A handheld electronic device usable to play a game, comprising:

a housing having an oblong-shaped top surface, a bottom surface oppositely located to the top surface, a front portion, and a rear portion;

a touch-sensitive input device located on the oblong-shaped top surface of the housing;

a home button centrally located in a horizontal direction on the oblong-shaped top surface below the touch-sensitive input device;

an inertial sensor configured to detect data related to aspects of at least one of position, attitude and orientation of the handheld electronic device;

an imaging device configured to capture an image; and

processing circuitry including, at least, a microprocessor, the processing circuitry operatively coupled to the touch-sensitive input device, the home button, the imaging device, and the inertial sensor, the processing circuitry configured to process signals provided from the touch-sensitive input device, the home button, and the inertial sensor, the processing circuitry further configured to generate image data based on the image captured by the imaging device,

at least the touch-sensitive input device producing output data, and at least a portion of the output data is used for providing gaming control.

* * * * *