US009244561B2

(12) **United States Patent**
Hotelling et al.

(10) **Patent No.: US 9,244,561 B2**
(45) **Date of Patent: Jan. 26, 2016**

(54) **TOUCH SCREEN LIQUID CRYSTAL DISPLAY**

(71) Applicant: **Apple Inc.**, Cupertino, CA (US)

(72) Inventors: **Steve Porter Hotelling**, Los Gatos, CA (US); **Wei Chen**, Palo Alto, CA (US); **Christoph Horst Krah**, Los Altos, CA (US); **John Greer Elias**, Townsend, DE (US); **Wei Hsin Yao**, Palo Alto, CA (US); **John Z. Zhong**, Saratoga, CA (US); **Andrew Bert Hodge**, Palo Alto, CA (US); **Brian Richards Land**, Woodside, CA (US); **Willem den Boer**, Brighton, MI (US)

(73) Assignee: **Apple Inc.**, Cupertino, CA (US)

(*) Notice: Subject to any disclaimer, the term of this patent is extended or adjusted under 35 U.S.C. 154(b) by 13 days.

(21) Appl. No.: **14/174,760**

(22) Filed: **Feb. 6, 2014**

(65) **Prior Publication Data**

US 2014/0152619 A1 Jun. 5, 2014

Related U.S. Application Data

(62) Division of application No. 11/760,080, filed on Jun. 8, 2007, now Pat. No. 8,654,083.

(60) Provisional application No. 60/804,361, filed on Jun. 9, 2006, provisional application No. 60/883,979, filed on Jan. 8, 2007.

(51) **Int. Cl.**

G09G 3/36	(2006.01)
G06F 3/044	(2006.01)
G06F 3/041	(2006.01)
G02F 1/1333	(2006.01)
G02F 1/1343	(2006.01)

(52) **U.S. Cl.**

CPC ..... ***G06F 3/0412*** (2013.01); ***G02F 1/13338*** (2013.01); ***G02F 1/134363*** (2013.01); (Continued)

(58) **Field of Classification Search**

CPC G02F 1/13338; G02F 1/134363; G06F 3/0412; G06F 3/044; G06F 2203/04112; G06F 2203/04103; G09G 3/36–3/38; G09G 2300/0439–2300/0495; G09G 2310/0264–2310/0297

USPC 345/156–184; 178/18.01–20.04

See application file for complete search history.

(56) **References Cited**

U.S. PATENT DOCUMENTS

2,751,555	A	6/1956	Kirkpatrick
3,333,160	A	7/1967	Gorski

(Continued)

FOREIGN PATENT DOCUMENTS

AU	2005246219	A1	12/2005
CA	1243096	A	10/1988

(Continued)

OTHER PUBLICATIONS

Non-Final Office Action mailed Mar. 25, 2014, for U.S. Appl. No. 14/073,818, filed Nov. 6, 2013, six pages.

(Continued)

Primary Examiner — Patrick F Marinelli

(74) *Attorney, Agent, or Firm* — Morrison & Foerster LLP

(57) **ABSTRACT**

Disclosed herein are liquid-crystal display (LCD) touch screens that integrate the touch sensing elements with the display circuitry. The integration may take a variety of forms. Touch sensing elements can be completely implemented within the LCD stackup but outside the not between the color filter plate and the array plate. Alternatively, some touch sensing elements can be between the color filter and array plates with other touch sensing elements not between the plates. In another alternative, all touch sensing elements can be between the color filter and array plates. The latter alternative can include both conventional and in-plane-switching (IPS) LCDs. In some forms, one or more display structures can also have a touch sensing function. Techniques for manufacturing and operating such displays, as well as various devices embodying such displays are also disclosed.

34 Claims, 78 Drawing Sheets

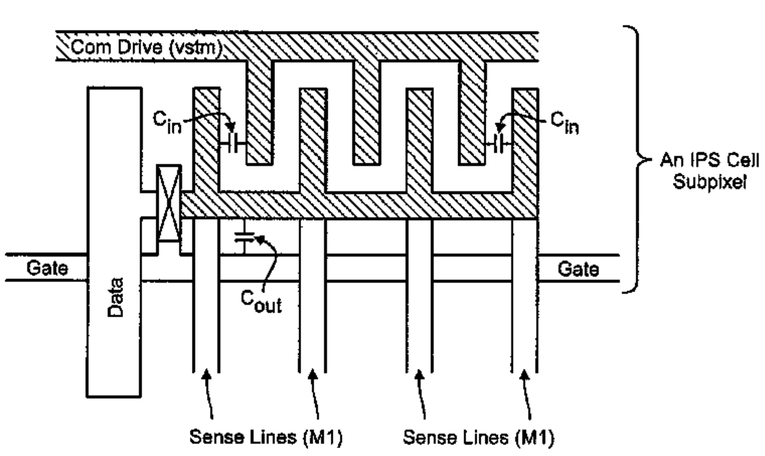

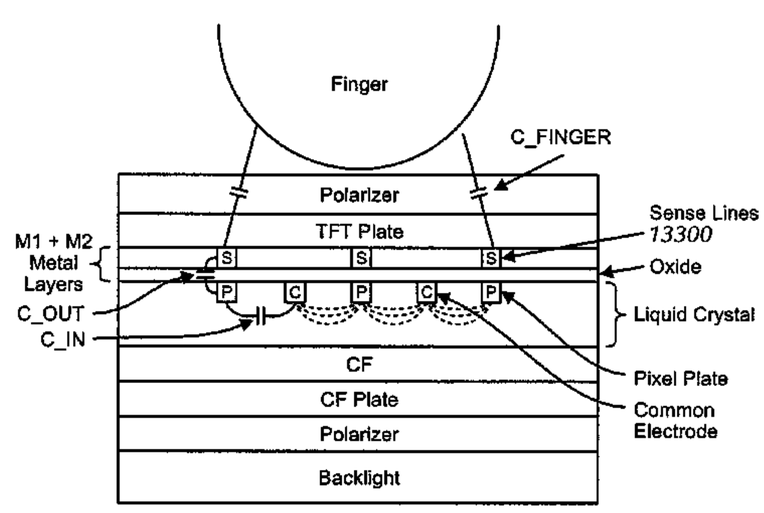

(52) **U.S. Cl.**
CPC ***G06F3/044*** (2013.01); ***G09G 3/3648*** (2013.01); *G06F 2203/04103* (2013.01); *G06F 2203/04112* (2013.01); *G09G 2300/0426* (2013.01); *G09G 2300/0439* (2013.01); *G09G 2300/0478* (2013.01)

(56) **References Cited**

U.S. PATENT DOCUMENTS

3,541,541 A 11/1970 Englebart
3,644,835 A 2/1972 Thompson
3,662,105 A 5/1972 Hurst et al.
3,798,370 A 3/1974 Hurst
3,875,472 A 4/1975 Schermerhorn
3,974,332 A 8/1976 Abe et al.
4,194,083 A 3/1980 Abe et al.
4,233,522 A 11/1980 Grummer et al.
4,246,452 A 1/1981 Chandler
4,250,495 A 2/1981 Beckerman et al.
4,266,144 A 5/1981 Bristol
4,268,815 A 5/1981 Eventoff et al.
4,277,517 A 7/1981 Smith, Jr.
4,290,052 A 9/1981 Eichelberger et al.
4,307,383 A 12/1981 Brienza
4,313,108 A 1/1982 Yoshida
4,345,000 A 8/1982 Kawazoe et al.
4,363,027 A 12/1982 Brienza
4,394,643 A 7/1983 Williams
4,526,043 A 7/1985 Boie
4,550,221 A 10/1985 Mabusth
4,587,378 A 5/1986 Moore
4,618,989 A 10/1986 Tsukune et al.
4,623,757 A 11/1986 Marino
4,639,720 A 1/1987 Rympalski et al.
4,672,364 A 6/1987 Lucas
4,672,558 A 6/1987 Beckes et al.
4,686,332 A 8/1987 Greanias et al.
4,692,809 A 9/1987 Beining et al.
4,695,827 A 9/1987 Beining et al.
4,707,845 A 11/1987 Krein et al.
4,723,056 A 2/1988 Tamaru et al.
4,733,222 A 3/1988 Evans
4,734,685 A 3/1988 Watanabe
4,740,781 A 4/1988 Brown
4,746,770 A 5/1988 McAvinney
4,771,276 A 9/1988 Parks
4,772,885 A 9/1988 Uehara et al.
4,788,384 A 11/1988 Bruere-Dawson et al.
4,806,709 A 2/1989 Evans
4,806,846 A 2/1989 Kerber
4,839,634 A * 6/1989 More G06K 9/24 178/18.09
4,853,493 A 8/1989 Schlosser et al.
4,898,555 A 2/1990 Sampson
4,908,710 A * 3/1990 Wakai G09G 3/3611 345/103
4,910,504 A 3/1990 Eriksson
4,914,624 A 4/1990 Dunthorn et al.
4,916,308 A 4/1990 Meadows
4,954,823 A 9/1990 Binstead
4,968,877 A 11/1990 McAvinney et al.
5,003,519 A 3/1991 Noirjean
5,017,030 A 5/1991 Crews
5,062,198 A 11/1991 Sun
5,073,950 A 12/1991 Colbert et al.
5,105,186 A 4/1992 May
5,105,288 A 4/1992 Senda et al.
5,113,041 A 5/1992 Blonder et al.
5,117,071 A 5/1992 Greanias et al.
5,178,477 A 1/1993 Gambaro
5,189,403 A 2/1993 Franz et al.
5,194,862 A 3/1993 Edwards
5,224,861 A 7/1993 Glass et al.
5,239,152 A 8/1993 Caldwell et al.
5,241,308 A 8/1993 Young
5,252,951 A 10/1993 Tannenbaum et al.
5,281,966 A 1/1994 Walsh
5,293,430 A 3/1994 Shiau et al.
5,305,017 A 4/1994 Gerpheide
5,345,543 A 9/1994 Capps et al.
5,353,135 A 10/1994 Edwards
5,374,787 A 12/1994 Miller et al.
5,376,948 A 12/1994 Roberts
5,381,160 A 1/1995 Landmeier
5,386,219 A 1/1995 Greanias et al.
5,392,058 A 2/1995 Tagawa
5,398,310 A 3/1995 Tchao et al.
5,432,671 A 7/1995 Allavena
5,442,742 A 8/1995 Greyson et al.
5,457,289 A 10/1995 Huang et al.
5,459,463 A 10/1995 Gruaz et al.
5,463,388 A 10/1995 Boie et al.
5,463,696 A 10/1995 Beernink et al.
5,483,261 A 1/1996 Yasutake
5,488,204 A 1/1996 Mead et al.
5,495,077 A 2/1996 Miller et al.
5,499,026 A 3/1996 Liao et al.
5,513,309 A 4/1996 Meier et al.
5,523,775 A 6/1996 Capps
5,530,455 A 6/1996 Gillick et al.
5,534,892 A 7/1996 Tagawa
5,543,588 A 8/1996 Bisset et al.
5,543,589 A 8/1996 Buchana et al.
5,543,590 A 8/1996 Gillespie et al.
5,543,591 A 8/1996 Gillespie et al.
5,550,659 A 8/1996 Fujieda et al.
5,552,787 A 9/1996 Schuler et al.
5,563,632 A 10/1996 Roberts
5,563,727 A 10/1996 Larson et al.
5,563,996 A 10/1996 Tchao
5,565,658 A 10/1996 Gerpheide et al.
5,572,205 A 11/1996 Caldwell et al.
5,576,070 A 11/1996 Yaniv
5,579,036 A 11/1996 Yates, IV
5,581,681 A 12/1996 Tchao et al.
5,583,946 A 12/1996 Gourdol
5,589,856 A 12/1996 Stein et al.
5,590,219 A 12/1996 Gourdol
5,592,566 A 1/1997 Pagallo et al.
5,594,806 A 1/1997 Colbert
5,594,810 A 1/1997 Gourdol
5,596,694 A 1/1997 Capps
5,612,719 A 3/1997 Beernink et al.
5,623,280 A 4/1997 Akins et al.
5,631,805 A 5/1997 Bonsall
5,633,955 A 5/1997 Bozinovic et al.
5,634,102 A 5/1997 Capps
5,636,101 A 6/1997 Bonsall et al.
5,638,093 A 6/1997 Takahashi et al.
5,642,108 A 6/1997 Gopher et al.
5,644,657 A 7/1997 Capps et al.
5,648,642 A 7/1997 Miller et al.
5,650,597 A 7/1997 Redmayne
5,666,113 A 9/1997 Logan
5,666,502 A 9/1997 Capps
5,666,552 A 9/1997 Greyson et al.
5,675,361 A 10/1997 Santilli
5,677,710 A 10/1997 Thompson-Rohrlich
5,677,744 A 10/1997 Yoneda et al.
5,686,973 A 11/1997 Lee
5,689,253 A 11/1997 Hargreaves et al.
5,710,844 A 1/1998 Capps et al.
5,729,250 A 3/1998 Bishop et al.
5,730,165 A 3/1998 Philipp
5,734,742 A 3/1998 Asaeda et al.
5,734,751 A 3/1998 Saito
5,736,976 A 4/1998 Cheung
5,741,990 A 4/1998 Davies
5,745,116 A 4/1998 Pisutha-Arnond
5,745,716 A 4/1998 Tchao et al.
5,748,269 A 5/1998 Harris et al.
5,760,857 A * 6/1998 Yanagawa G02F 1/13463 349/109
5,764,218 A 6/1998 Bona et al.
5,764,818 A 6/1998 Capps et al.

5,767,457 A 6/1998 Gerpheide et al.
5,767,842 A 6/1998 Korth
5,777,596 A 7/1998 Herbert
5,790,104 A 8/1998 Shieh
5,790,106 A 8/1998 Hirano et al.
5,790,107 A 8/1998 Kasser et al.
5,802,516 A 9/1998 Shwarts et al.
5,805,144 A 9/1998 Scholder et al.
5,808,567 A 9/1998 McCloud
5,809,166 A 9/1998 Huang et al.
5,809,267 A 9/1998 Moran et al.
5,815,141 A 9/1998 Phares
5,821,690 A 10/1998 Martens et al.
5,821,930 A 10/1998 Hansen
5,823,782 A 10/1998 Marcus et al.
5,825,351 A 10/1998 Tam
5,825,352 A 10/1998 Bisset et al.
5,835,079 A 11/1998 Shieh
5,838,308 A 11/1998 Knapp et al.
5,841,078 A 11/1998 Miller et al.
5,841,415 A 11/1998 Kwon et al.
5,844,506 A 12/1998 Binstead
5,847,690 A 12/1998 Boie et al.
5,852,487 A 12/1998 Fujimori et al.
5,854,450 A 12/1998 Kent
5,854,625 A 12/1998 Frisch et al.
5,856,822 A 1/1999 Du et al.
5,861,583 A 1/1999 Schediwy et al.
5,861,875 A 1/1999 Gerpheide
5,867,151 A 2/1999 Nakai
5,869,790 A 2/1999 Shigetaka et al.
5,869,791 A 2/1999 Young
5,880,411 A 3/1999 Gillespie et al.
5,898,434 A 4/1999 Small et al.
5,914,465 A 6/1999 Allen et al.
5,917,165 A 6/1999 Platt et al.
5,920,298 A 7/1999 McKnight
5,920,309 A 7/1999 Bisset et al.
5,923,319 A 7/1999 Bishop et al.
5,929,834 A 7/1999 Inoue et al.
5,933,134 A 8/1999 Shieh
5,940,055 A 8/1999 Lee
5,940,064 A 8/1999 Kai et al.
5,942,733 A 8/1999 Allen et al.
5,943,043 A 8/1999 Furuhata et al.
5,943,044 A 8/1999 Martinelli et al.
5,945,980 A 8/1999 Moissev et al.
5,952,998 A 9/1999 Clancy et al.
5,955,198 A 9/1999 Hashimoto et al.
5,977,562 A * 11/1999 Hirakata G02F 1/134363 257/59
5,977,957 A * 11/1999 Miller G06F 1/32 178/18.01
5,982,352 A 11/1999 Pryor
5,986,723 A 11/1999 Nakamura et al.
6,002,389 A 12/1999 Kasser
6,002,808 A 12/1999 Freeman
6,008,800 A 12/1999 Pryor
6,020,881 A 2/2000 Naughton et al.
6,020,945 A 2/2000 Sawai et al.
6,023,265 A 2/2000 Lee
6,028,581 A 2/2000 Umeya
6,029,214 A 2/2000 Dorfman et al.
6,031,524 A 2/2000 Kunert
6,037,882 A 3/2000 Levy
6,050,825 A 4/2000 Nichol et al.
6,052,339 A 4/2000 Frenkel et al.
6,057,903 A 5/2000 Colgan et al.
6,061,177 A 5/2000 Fujimoto
6,072,494 A 6/2000 Nguyen
6,081,259 A 6/2000 Teterwak
6,084,576 A 7/2000 Leu et al.
6,107,654 A 8/2000 Yamazaki
6,107,997 A 8/2000 Ure
6,124,848 A * 9/2000 Ballare G06F 3/0412 178/18.02
6,128,003 A 10/2000 Smith et al.
6,131,299 A 10/2000 Raab et al.
6,133,906 A * 10/2000 Geaghan G06F 3/0412 178/18.01
6,135,958 A 10/2000 Mikula-Curtis et al.
6,137,427 A 10/2000 Binstead
6,144,380 A 11/2000 Shwarts et al.
6,163,313 A 12/2000 Aroyan et al.
6,172,667 B1 1/2001 Sayag
6,177,918 B1 1/2001 Colgan et al.
6,188,391 B1 2/2001 Seely et al.
6,191,828 B1 2/2001 Kim et al.
6,198,515 B1 3/2001 Cole
6,204,897 B1 3/2001 Colgan et al.
6,208,329 B1 3/2001 Ballare
6,211,585 B1 4/2001 Sato et al.
6,222,465 B1 4/2001 Kumar et al.
6,222,528 B1 * 4/2001 Gerpheide G06F 3/044 345/173
6,239,389 B1 5/2001 Allen et al.
6,239,788 B1 * 5/2001 Nohno G06F 3/0412 178/18.03
6,239,790 B1 5/2001 Martinelli et al.
6,243,071 B1 6/2001 Shwarts et al.
6,246,862 B1 6/2001 Grivas et al.
6,249,606 B1 6/2001 Kiraly et al.
6,259,490 B1 7/2001 Colgan et al.
6,271,835 B1 8/2001 Hoeksma
6,285,428 B1 * 9/2001 Kim G02F 1/134363 349/123
6,288,707 B1 9/2001 Philipp
6,289,326 B1 9/2001 LaFleur
6,292,178 B1 9/2001 Bernstein et al.
6,297,811 B1 10/2001 Kent
6,310,610 B1 10/2001 Beaton et al.
6,323,846 B1 11/2001 Westerman et al.
6,323,849 B1 11/2001 He et al.
6,337,678 B1 1/2002 Fish
6,342,938 B1 1/2002 Song et al.
6,347,290 B1 2/2002 Bartlett
6,377,009 B1 4/2002 Philipp
6,380,931 B1 4/2002 Gillespie et al.
6,411,287 B1 6/2002 Scharff et al.
6,414,671 B1 7/2002 Gillespie et al.
6,417,846 B1 7/2002 Lee
6,421,039 B1 * 7/2002 Moon G02F 1/134363 345/100
6,421,234 B1 7/2002 Ricks et al.
6,425,289 B1 7/2002 Igel et al.
6,452,514 B1 9/2002 Philipp
6,456,350 B1 * 9/2002 Ashizawa G02F 1/134363 349/141
6,457,355 B1 10/2002 Philipp
6,459,424 B1 10/2002 Resman
6,466,036 B1 10/2002 Philipp
6,483,498 B1 11/2002 Colgan et al.
6,501,528 B1 12/2002 Hamada
6,501,529 B1 12/2002 Kurihara et al.
6,504,530 B1 1/2003 Wilson et al.
6,504,713 B1 1/2003 Pandolfi et al.
6,515,669 B1 2/2003 Mohri
6,522,772 B1 2/2003 Morrison et al.
6,525,547 B2 2/2003 Hayes
6,525,749 B1 2/2003 Moran et al.
6,535,200 B2 3/2003 Philipp
6,543,684 B1 4/2003 White et al.
6,543,947 B2 4/2003 Lee
6,549,193 B1 4/2003 Huang et al.
6,570,557 B1 5/2003 Westerman et al.
6,593,916 B1 7/2003 Aroyan
6,602,790 B2 8/2003 Kian et al.
6,610,936 B2 8/2003 Gillespie et al.
6,624,833 B1 9/2003 Kumar et al.
6,624,835 B2 9/2003 Willig
6,628,268 B1 9/2003 Harada et al.
6,639,577 B2 10/2003 Eberhard
D482,368 S 11/2003 DenToonder et al.
6,650,319 B1 11/2003 Hurst et al.
6,658,994 B1 12/2003 McMillan
6,670,894 B2 12/2003 Mehring
6,677,932 B1 1/2004 Westerman

6,677,934 B1 1/2004 Blanchard
6,680,448 B2 1/2004 Kawashima et al.
6,690,387 B2 2/2004 Zimmerman et al.
6,721,375 B1 4/2004 Hammel
6,723,929 B2 4/2004 Kent
6,724,366 B2 4/2004 Crawford
6,757,002 B1 6/2004 Oross et al.
6,762,752 B2 7/2004 Perski et al.
6,784,948 B2 8/2004 Kawashima et al.
6,785,578 B2 8/2004 Johnson et al.
6,803,906 B1 10/2004 Morrison et al.
6,825,833 B2 11/2004 Mulligan et al.
6,842,672 B1 1/2005 Straub et al.
6,846,579 B2 1/2005 Anderson et al.
6,856,259 B1 2/2005 Sharp
6,876,355 B1 4/2005 Ahn et al.
6,888,536 B2 5/2005 Westerman et al.
6,900,795 B1 5/2005 Knight, III et al.
6,906,692 B2 6/2005 Ishiyama
6,924,789 B2 8/2005 Bick
6,927,761 B2 8/2005 Badaye et al.
6,927,763 B2 8/2005 LaMonica
6,942,571 B1 9/2005 McAllister et al.
6,943,779 B2 9/2005 Satoh
6,947,102 B2 * 9/2005 den Boer G02F 1/13338 345/104
6,961,049 B2 11/2005 Mulligan et al.
6,965,375 B1 11/2005 Gettemy et al.
6,970,160 B2 11/2005 Mulligan et al.
6,972,401 B2 12/2005 Akitt et al.
6,977,666 B1 12/2005 Hedrick
6,982,432 B2 * 1/2006 Umemoto G02F 1/13338 257/112
6,985,801 B1 1/2006 Straub et al.
6,992,659 B2 1/2006 Gettemy
6,995,752 B2 2/2006 Lu
7,009,663 B2 * 3/2006 Abileah G02F 1/13338 345/175
7,015,894 B2 3/2006 Morohoshi
7,023,427 B2 4/2006 Kraus et al.
7,030,860 B1 4/2006 Hsu et al.
7,031,228 B2 4/2006 Born et al.
7,038,659 B2 5/2006 Rajkowski
7,042,444 B2 5/2006 Cok
7,046,235 B2 5/2006 Katoh
7,088,342 B2 8/2006 Rekimoto
7,088,343 B2 8/2006 Smith
7,098,127 B2 8/2006 Ito
7,098,897 B2 8/2006 Vakil et al.
7,109,978 B2 9/2006 Gillespie et al.
7,129,935 B2 10/2006 Mackey
7,133,032 B2 11/2006 Cok
7,138,984 B1 11/2006 Miles
7,151,528 B2 12/2006 Taylor et al.
7,154,481 B2 12/2006 Cross et al.
7,177,001 B2 2/2007 Lee
7,184,064 B2 2/2007 Zimmerman et al.
7,190,416 B2 3/2007 Paukshto et al.
7,202,856 B2 4/2007 Cok
7,230,608 B2 6/2007 Cok
7,254,775 B2 8/2007 Geaghan et al.
7,268,770 B1 9/2007 Takahata et al.
7,274,353 B2 9/2007 Chiu et al.
7,280,167 B2 * 10/2007 Choi G06F 3/0412 345/174
7,292,229 B2 11/2007 Morag et al.
7,307,231 B2 12/2007 Matsumoto et al.
7,319,448 B2 * 1/2008 Kim G02F 1/134363 345/87
RE40,153 E 3/2008 Westerman et al.
7,339,579 B2 3/2008 Richter et al.
7,355,592 B2 4/2008 Hong et al.
7,362,313 B2 4/2008 Geaghan et al.
7,372,455 B2 5/2008 Perski et al.
7,379,054 B2 * 5/2008 Lee G06F 3/041 178/18.06
7,453,444 B2 11/2008 Geaghan
7,463,246 B2 12/2008 Mackey
7,483,016 B1 1/2009 Gettemy et al.
7,554,624 B2 6/2009 Kusuda et al.
7,633,484 B2 12/2009 Ito
7,663,583 B2 * 2/2010 Lee G02F 1/134363 257/72
7,663,607 B2 2/2010 Hotelling et al.
7,683,888 B1 3/2010 Kennedy
7,688,315 B1 3/2010 Gettemy et al.
7,692,729 B2 * 4/2010 Pak G02F 1/13338 345/173
7,705,834 B2 4/2010 Swedin
7,730,401 B2 6/2010 Gillespie et al.
7,737,957 B2 * 6/2010 Lee G06F 1/3203 178/18.01
7,742,041 B2 * 6/2010 Lee G02F 1/13338 178/18.06
7,746,326 B2 6/2010 Sato
7,755,683 B2 7/2010 Sergio et al.
7,800,589 B2 9/2010 Hurst et al.
7,812,828 B2 10/2010 Westerman et al.
7,843,439 B2 11/2010 Perski et al.
7,868,875 B2 * 1/2011 Park G06F 3/0421 345/104
7,920,129 B2 4/2011 Hotelling et al.
8,031,180 B2 10/2011 Miyamoto et al.
8,125,463 B2 2/2012 Hotelling et al.
8,130,209 B2 3/2012 Chang
8,243,027 B2 * 8/2012 Hotelling G02F 1/13338 345/104
8,259,078 B2 * 9/2012 Hotelling G02F 1/13338 345/156
8,274,492 B2 * 9/2012 Hotelling G02F 1/134363 345/173
8,400,406 B1 * 3/2013 Kurtz G06F 3/0428 345/104
8,416,209 B2 4/2013 Hotelling et al.
8,432,371 B2 * 4/2013 Hotelling G06F 3/0412 345/104
8,451,244 B2 * 5/2013 Hotelling G06F 3/0412 345/104
8,479,122 B2 7/2013 Hotelling et al.
8,493,330 B2 7/2013 Krah
8,508,244 B2 * 8/2013 Seguine G01D 5/24 324/658
8,552,989 B2 * 10/2013 Hotelling G02F 1/13338 345/104
8,553,013 B2 * 10/2013 Kim G06F 3/0412 178/18.06
8,605,051 B2 12/2013 Hotelling et al.
8,654,083 B2 * 2/2014 Hotelling G02F 1/13338 345/173
8,743,300 B2 6/2014 Chang et al.
8,804,056 B2 8/2014 Chang et al.
8,872,985 B2 10/2014 Jannard et al.
8,928,618 B2 1/2015 Hotelling et al.
8,933,351 B2 * 1/2015 Noguchi G06F 3/0416 178/18.06
8,982,087 B2 3/2015 Hotelling et al.
9,025,090 B2 5/2015 Chang et al.
9,035,202 B2 * 5/2015 Mizuhashi G06F 3/0412 178/18.06
9,035,907 B2 5/2015 Hotelling et al.
2001/0000961 A1 5/2001 Hikida et al.
2001/0020578 A1 9/2001 Baier
2001/0020986 A1 9/2001 Ikeda et al.
2001/0020987 A1 9/2001 Ahn et al.
2002/0015024 A1 2/2002 Westerman et al.
2002/0021398 A1 * 2/2002 Matsumoto G02F 1/1345 349/149
2002/0041356 A1 4/2002 Tanada et al.
2002/0049070 A1 4/2002 Bick
2002/0063674 A1 * 5/2002 Chiang G09G 3/2011 345/98
2002/0084992 A1 7/2002 Agnew
2002/0089496 A1 7/2002 Numao
2002/0101410 A1 8/2002 Sakata et al.
2002/0118848 A1 8/2002 Karpenstein
2002/0140649 A1 * 10/2002 Aoyama G02F 1/134363 345/87
2002/0159015 A1 10/2002 Seo et al.

2002/0167489 A1 11/2002 Davis
2002/0185981 A1 12/2002 Dietz et al.
2002/0185999 A1 12/2002 Tajima et al.
2002/0186210 A1 12/2002 Itoh
2002/0190964 A1 12/2002 Van Berkel
2002/0191029 A1 12/2002 Gillespie et al.
2002/0192445 A1 12/2002 Ezzell et al.
2002/0196237 A1 12/2002 Fernando et al.
2003/0006974 A1 1/2003 Clough et al.
2003/0035479 A1 2/2003 Kan et al.
2003/0067451 A1 4/2003 Tagg et al.
2003/0069653 A1 4/2003 Johnson et al.
2003/0076301 A1 4/2003 Tsuk et al.
2003/0076303 A1 4/2003 Huppi
2003/0076306 A1 4/2003 Zadesky et al.
2003/0085882 A1 5/2003 Lu
2003/0095095 A1 5/2003 Pihlaja
2003/0095096 A1 5/2003 Robbin et al.
2003/0098858 A1 5/2003 Perski et al.
2003/0151600 A1 8/2003 Takeuchi et al.
2003/0174128 A1 9/2003 Matsufusa
2003/0179323 A1 9/2003 Abileah et al.
2003/0201984 A1 10/2003 Falvo
2003/0206162 A1 11/2003 Roberts
2003/0206202 A1 11/2003 Moriya
2003/0222857 A1 12/2003 Abileah
2003/0234768 A1 12/2003 Rekimoto et al.
2003/0234769 A1 12/2003 Cross et al.
2003/0234770 A1 12/2003 MacKey
2004/0022010 A1 2/2004 Shigetaka
2004/0056839 A1 3/2004 Yoshihara
2004/0080501 A1 4/2004 Koyama
2004/0090429 A1 5/2004 Geaghan et al.
2004/0095335 A1 5/2004 Oh et al.
2004/0109097 A1 6/2004 Mai
2004/0119701 A1 6/2004 Mulligan et al.
2004/0141096 A1 7/2004 Mai
2004/0150629 A1 8/2004 Lee
2004/0155871 A1 8/2004 Perski et al.
2004/0155991 A1 8/2004 Lowles et al.
2004/0165005 A1 8/2004 Yoshikawa et al.
2004/0183076 A1 9/2004 Yamazaki et al.
2004/0188150 A1 9/2004 Richard et al.
2004/0189587 A1* 9/2004 Jung G02F 1/13338 345/102
2004/0189612 A1 9/2004 Bottari et al.
2004/0217945 A1 11/2004 Miyamoto et al.
2004/0227736 A1 11/2004 Kamrath et al.
2004/0239650 A1 12/2004 Mackey
2004/0243747 A1 12/2004 Rekimoto
2004/0263484 A1 12/2004 Mantysalo et al.
2005/0007349 A1 1/2005 Vakil et al.
2005/0012723 A1 1/2005 Pallakoff
2005/0017737 A1 1/2005 Yakabe et al.
2005/0046621 A1 3/2005 Kaikuranta
2005/0052425 A1 3/2005 Zadesky et al.
2005/0052427 A1 3/2005 Wu et al.
2005/0052582 A1 3/2005 Mai
2005/0062620 A1 3/2005 Schaefer
2005/0073507 A1 4/2005 Richter et al.
2005/0083307 A1 4/2005 Aufderheide et al.
2005/0099402 A1 5/2005 Nakanishi et al.
2005/0104867 A1 5/2005 Westerman et al.
2005/0110768 A1 5/2005 Marriott et al.
2005/0140620 A1* 6/2005 Aoyama G02F 1/134363 345/87
2005/0146511 A1 7/2005 Hill et al.
2005/0162402 A1 7/2005 Watanachote
2005/0170668 A1 8/2005 Park et al.
2005/0231487 A1 10/2005 Ming
2005/0237439 A1 10/2005 Mai
2005/0243023 A1 11/2005 Reddy et al.
2006/0007087 A1 1/2006 Choi et al.
2006/0007165 A1 1/2006 Yang et al.
2006/0012575 A1* 1/2006 Knapp G02F 1/13338 345/173
2006/0017710 A1 1/2006 Lee et al.
2006/0022955 A1 2/2006 Kennedy
2006/0022956 A1 2/2006 Lengeling et al.
2006/0026535 A1 2/2006 Hotelling et al.
2006/0026536 A1 2/2006 Hotelling et al.
2006/0032680 A1 2/2006 Elias et al.
2006/0033724 A1 2/2006 Chaudhri et al.
2006/0044259 A1 3/2006 Hotelling et al.
2006/0053387 A1 3/2006 Ording
2006/0066582 A1 3/2006 Lyon et al.
2006/0085757 A1 4/2006 Andre et al.
2006/0109222 A1 5/2006 Lee et al.
2006/0132462 A1 6/2006 Geaghan
2006/0145365 A1 7/2006 Halls et al.
2006/0145983 A1* 7/2006 Lee et al. 345/92
2006/0146033 A1 7/2006 Chen et al.
2006/0146034 A1 7/2006 Chen et al.
2006/0146038 A1* 7/2006 Park G06F 3/0412 345/173
2006/0197753 A1 9/2006 Hotelling
2006/0208985 A1* 9/2006 Hwang G09G 3/3655 345/92
2006/0227114 A1 10/2006 Geaghan et al.
2006/0232564 A1 10/2006 Nishimura et al.
2006/0232567 A1 10/2006 Westerman et al.
2006/0238517 A1 10/2006 King et al.
2006/0238518 A1 10/2006 Westerman et al.
2006/0238519 A1 10/2006 Westerman et al.
2006/0238520 A1 10/2006 Westerman et al.
2006/0238521 A1 10/2006 Westerman et al.
2006/0238522 A1 10/2006 Westerman et al.
2006/0244736 A1 11/2006 Tseng
2006/0262100 A1* 11/2006 Van Berkel G06F 3/0412 345/173
2006/0278444 A1 12/2006 Binstead
2006/0279679 A1 12/2006 Fujisawa et al.
2006/0284857 A1* 12/2006 Oh G06F 1/3203 345/173
2006/0290863 A1* 12/2006 HoeSup G02F 1/134363 349/141
2007/0013678 A1 1/2007 Nakajima et al.
2007/0018969 A1 1/2007 Chen et al.
2007/0027932 A1 2/2007 Thibeault
2007/0062739 A1 3/2007 Philipp et al.
2007/0075977 A1 4/2007 Chen et al.
2007/0085838 A1 4/2007 Ricks et al.
2007/0109274 A1 5/2007 Reynolds
2007/0152976 A1 7/2007 Townsend et al.
2007/0159561 A1 7/2007 Chien
2007/0176905 A1 8/2007 Shih et al.
2007/0182706 A1 8/2007 Cassidy et al.
2007/0216657 A1 9/2007 Konieck
2007/0229464 A1 10/2007 Hotelling et al.
2007/0236466 A1 10/2007 Hotelling
2007/0247429 A1 10/2007 Westerman
2007/0257890 A1* 11/2007 Hotelling G06F 3/0418 345/173
2007/0262967 A1 11/2007 Rho
2008/0048994 A1 2/2008 Lee et al.
2008/0055221 A1 3/2008 Yabuta et al.
2008/0055268 A1 3/2008 Yoo et al.
2008/0055270 A1 3/2008 Cho et al.
2008/0062139 A1* 3/2008 Hotelling G02F 1/13338 345/173
2008/0062140 A1* 3/2008 Hotelling G02F 1/13338 345/173
2008/0062147 A1* 3/2008 Hotelling G02F 1/13338 345/174
2008/0062148 A1* 3/2008 Hotelling G02F 1/13338 345/174
2008/0067528 A1 3/2008 Choi et al.
2008/0074401 A1 3/2008 Chung et al.
2008/0079697 A1 4/2008 Lee et al.
2008/0129317 A1 6/2008 Oba
2008/0129898 A1 6/2008 Moon
2008/0131624 A1 6/2008 Egami et al.
2008/0136980 A1 6/2008 Rho et al.
2008/0150901 A1 6/2008 Lowles et al.
2008/0157867 A1 7/2008 Krah
2008/0158167 A1 7/2008 Hotelling et al.
2008/0158181 A1 7/2008 Hamblin et al.
2008/0165158 A1 7/2008 Hotelling et al.

2008/0186288	A1	8/2008	Chang	
2008/0273014	A1*	11/2008	Lowles	G06F 3/041 345/173
2008/0297476	A1	12/2008	Hotelling et al.	
2009/0066670	A1	3/2009	Hotelling et al.	
2009/0090694	A1	4/2009	Hotelling et al.	
2009/0096757	A1	4/2009	Hotelling et al.	
2009/0096758	A1	4/2009	Hotelling et al.	
2009/0115743	A1	5/2009	Oowaki	
2009/0160816	A1	6/2009	Westerman et al.	
2009/0179875	A1*	7/2009	Li	G09G 3/3648 345/204
2009/0273581	A1	11/2009	Kim et al.	
2009/0279006	A1*	11/2009	Chien	G09G 3/3648 349/37
2009/0303193	A1	12/2009	Lim et al.	
2010/0066650	A1	3/2010	Lee et al.	
2010/0103121	A1	4/2010	Kim et al.	
2010/0182273	A1	7/2010	Noguchi et al.	
2010/0188347	A1	7/2010	Mizuhashi et al.	
2010/0194699	A1	8/2010	Chang	
2010/0238134	A1	9/2010	Day et al.	
2010/0289770	A1	11/2010	Lee et al.	
2011/0187677	A1*	8/2011	Hotelling	G06F 3/0412 345/174
2012/0105371	A1	5/2012	Hotelling et al.	
2012/0133858	A1	5/2012	Shin et al.	
2012/0162104	A1	6/2012	Chang	
2012/0162584	A1	6/2012	Chang	
2012/0268423	A1*	10/2012	Hotelling	G06F 3/0412 345/174
2013/0082964	A1	4/2013	Agari et al.	
2013/0106780	A1	5/2013	Hotelling et al.	
2013/0293484	A1*	11/2013	Singh	G06F 3/0416 345/173
2014/0062955	A1	3/2014	Hotelling	
2014/0078108	A1	3/2014	Hotelling	
2014/0139457	A1*	5/2014	Hotelling	G06F 3/0412 345/173
2014/0152619	A1*	6/2014	Hotelling	G02F 1/13338 345/174
2014/0300577	A1	10/2014	Hotelling et al.	
2014/0300578	A1	10/2014	Hotelling	
2015/0022497	A1	1/2015	Chang et al.	
2015/0192815	A1*	7/2015	Chang	G06F 3/0412 349/12
2015/0199053	A1	7/2015	Hotelling et al.	

FOREIGN PATENT DOCUMENTS

CA	2 494 353	A1	2/2004
CN	1867882	A	11/2006
CN	101241277	A	8/2008
DE	197 06 168	A1	8/1998
DE	102 51 296	A1	5/2004
EP	0 156 593	A2	10/1985
EP	0 250 931	A2	1/1988
EP	0 250 931	A3	1/1988
EP	0 464 908	A2	1/1992
EP	0 464 908	A3	1/1992
EP	0 464 908	B1	1/1992
EP	0 288 692	A2	7/1993
EP	0 288 692	A3	7/1993
EP	0 288 692	B1	7/1993
EP	0 664 504	A2	7/1995
EP	0 156 593	A3	10/1995
EP	0 786 745	A2	7/1997
EP	0 786 745	A3	7/1997
EP	0 786 745	B1	7/1997
EP	0 932 117	A2	7/1999
EP	0 932 117	A3	7/1999
EP	0 932 117	B1	7/1999
EP	0 973 123	A1	1/2000
EP	1 014 295	A2	1/2002
EP	1 014 295	A3	1/2002
EP	1 211 633	A1	6/2002
EP	1 211 633	B1	6/2002
EP	1 322 104	A1	6/2003
EP	1 391 807	A1	2/2004
EP	1 396 812	A2	3/2004
EP	1 396 812	A3	3/2004
EP	1 418 491	A2	5/2004
EP	1 418 491	A3	5/2004
EP	1 422 601	A1	5/2004
EP	1 455 264	A2	9/2004
EP	1 455 264	A3	9/2004
EP	2 214 084	A1	4/2010
EP	2 267 584	A1	12/2010
GB	1 486 988	A	9/1977
GB	2 168 816	A	6/1986
GB	2 368 483	A	7/2004
JP	53-147626	A	11/1978
JP	58-166430	A	10/1983
JP	59-214941	A	12/1984
JP	60-123927	A	7/1985
JP	60-211529	A	10/1985
JP	61-131314	A	6/1986
JP	63-279316	A	11/1988
JP	02-030024	A	1/1990
JP	03-180922	A	8/1991
JP	03-294918	A	12/1991
JP	04-127314	A	4/1992
JP	05-053726	A	3/1993
JP	05-080923	A	4/1993
JP	05-224818	A	9/1993
JP	06-161661	A	6/1994
JP	07-036017	A	2/1995
JP	07-044305	A	2/1995
JP	07-110741	A	4/1995
JP	07-141086	A	6/1995
JP	07-261932	A	10/1995
JP	08-016307	A	1/1996
JP	08-147092	A	6/1996
JP	08-242458	A	9/1996
JP	08-297267	A	11/1996
JP	09-054650	A	2/1997
JP	09-091079	A	4/1997
JP	09-096792	A	4/1997
JP	09-212302	A	8/1997
JP	09-292950	A	11/1997
JP	09-325852	A	12/1997
JP	10-003349	A	1/1998
JP	10269020	A	10/1998
JP	11-145141	A	5/1999
JP	11-505641	A	5/1999
JP	11-249813	A	9/1999
JP	2000-105670	A	4/2000
JP	2000-112642	A	4/2000
JP	2000-163031	A	6/2000
JP	2000-172437	A	6/2000
JP	2000-172447	A	6/2000
JP	2000-221932	A	8/2000
JP	2001-075079	A	3/2001
JP	2001-283228	A	10/2001
JP	2002-501271	A	1/2002
JP	2002-116017	A	4/2002
JP	2002-259052	A	9/2002
JP	2002-287660	A	10/2002
JP	2002-342014	A	11/2002
JP	2002-342033	A	11/2002
JP	2002-366304	A	12/2002
JP	2003-029899	A	1/2003
JP	2003-066417	A	3/2003
JP	2003-099192	A	4/2003
JP	2003-516015	A	5/2003
JP	2003-173237	A	6/2003
JP	2003-185688	A	7/2003
JP	2003-196023	A	7/2003
JP	2003-249738	A	9/2003
JP	2003-255855	A	9/2003
JP	2004-038919	A	2/2004
JP	2004-102985	A	4/2004
JP	2004-186333	A	7/2004
JP	2005-346047	A	12/2005
JP	2007-533044	T	11/2007
JP	2008-032756	A	2/2008
JP	2009-244958	A	10/2009
KR	10-0226812	B1	7/1999

KR	10-2003-0028973	A	4/2003
KR	10-2004-0002310	A	1/2004
KR	10-2004-0013029	A	2/2004
KR	10-2004-0022243	A	3/2004
KR	10-2005-0019799	A	3/2005
KR	10-2006-0089645	A	8/2006
KR	10-0887775	B1	3/2009
KR	10-2010-0127164	A	12/2010
TW	200302778	A	8/2003
TW	2004-21156	A	10/2004
TW	200529441	A	9/2005
WO	WO-87/04553	A1	7/1987
WO	WO-92/13328	A1	8/1992
WO	WO-96/15464	A1	5/1996
WO	WO-96/18179	A1	6/1996
WO	WO-97/18547	A1	5/1997
WO	WO-97/23738	A1	7/1997
WO	WO-98/14863	A1	4/1998
WO	WO-99/38149	A1	7/1999
WO	WO-01/27868	A1	4/2001
WO	WO-01/39371	A1	5/2001
WO	WO-03/079176	A2	9/2003
WO	WO-03/088176	A1	10/2003
WO	WO-2004/013833	A2	2/2004
WO	WO-2004/013833	A3	2/2004
WO	WO-2004/023376	A2	3/2004
WO	WO-2004/023376	A3	3/2004
WO	WO-2004/053576	A1	6/2004
WO	WO-2004/061808	A2	7/2004
WO	WO-2004/061808	A3	7/2004
WO	WO-2004/114265	A2	12/2004
WO	WO-2005/064451	A1	7/2005
WO	WO-2005/114369	A2	12/2005
WO	WO-2006/023569	A1	3/2006
WO	WO-2006/054585	A1	5/2006
WO	WO-2007/115032	A2	10/2007
WO	WO-2007/115032	A3	10/2007
WO	WO-2007/146779	A2	12/2007
WO	WO-2007/146779	A3	12/2007
WO	WO-2007/146780	A2	12/2007
WO	WO-2007/146780	A3	12/2007
WO	WO-2007/146783	A2	12/2007
WO	WO-2007/146783	A3	12/2007
WO	WO-2007/146785	A2	12/2007
WO	WO-2007/146785	A3	12/2007
WO	WO-2008/085457	A2	7/2008
WO	WO-2008/085457	A3	7/2008
WO	WO-2009/035471	A1	3/2009
WO	WO-2010/137727	A1	2/2010
WO	WO-2012/087639	A2	6/2012

OTHER PUBLICATIONS

Notice of Allowance mailed Mar. 3, 2014, for U.S. Appl. No. 13/251,099, filed Sep. 30, 2011, eight pages.
TW Search Report mailed Feb. 11, 2014, for TW Patent Application No. 110145112, one page.
Leeper (Synaptics Inc.) "Integration of a clear capacitive touch screen with a 1/8-VGA FSTN-LCD to form and LCD based touchpad," Society for information Display (May 21, 2002).
Non-Final Office Action for Ex Parte Reexamination mailed Dec. 24, 2013, of U.S. Pat. No. 7,663,607, 52 pages.
Non-Final Office Action mailed Apr. 18, 2014, for U.S. Appl. No. 11/818,395, filed Jun. 13, 2007, 17 pages.
Non-Final Office Action for Ex Parte Reexamination mailed May 16, 2014, of U.S. Pat. No. 7,663,607, 34 pages.
Notice of Allowance mailed Apr. 14, 2014, for U.S. Appl. No. 12/976,997, filed Dec. 22, 2010, 8 pages.
Notice of Prior and Concurrent Proceeedings under 37 C.F.R. § 1.565(a) for U.S. Ex Parte Reexamination Control No. 90/012,935, filed Jul. 30, 2013 (Reexamination of U.S. Pat. No. 7,663,607), 279 pages. (Submitted in four parts).
Response to Non-Final Office Action in Ex Parte Reexamination dated Mar. 24, 2014, of U.S. Pat. No. 7,663,607, 392 pages. (Submitted in two parts).
Non-Final Office Action mailed Jul. 14, 2014, for U.S. Appl. No. 14/308,595, filed Jun. 18, 2014, five pages.
Non-Final Office Action mailed Aug. 4, 2014, for U.S. Appl. No. 14/086,877, filed Nov. 21, 2013, 8 pages.
Notice of Allowance mailed Jul. 14, 2014, for U.S. Appl. No. 14/073,818, filed Nov. 6, 2013, seven pages.
Notice of Allowability (Corrected) mailed Jun. 27, 2014, for U.S. Appl. No. 12/976,997, filed Dec. 22, 2010, five pages.
Notice of Allowance mailed Oct. 31, 2014, for U.S. Appl. No. 14/308,595, filed Jun. 18, 2014, eight pages.
Notice of Allowance mailed Nov. 6, 2014, for U.S. Appl. No. 14/308,646, filed Jun. 18, 2014, eight pages.
Non-Final Office Action mailed Dec. 24, 2013, for Ex Parte Reexamination of U.S. Pat. No. 7,663,607, 52 pages.
Non-Final Office Action mailed Sep. 26, 2014, for U.S. Appl. No. 14/308,646, filed Jun. 18, 2013, five pages.
Final Office Action mailed Oct. 27, 2014, for U.S. Appl. No. 11/818,395, filed Jun. 13, 2007, 17 pages.
Notice of Allowance mailed Dec. 23, 2014, for U.S. Appl. No. 14/456,831, filed Aug. 11, 2014, eight pages.
Non-Final Office Action mailed Jan. 30, 2015, for U.S. Appl. No. 14/047,960, filed Oct. 7, 2013, 18 pages.
Notice of Allowability (Corrected) mailed Jan. 21, 2015, for U.S. Appl. No. 14/308,646, filed Jun. 18, 2014, five pages.
Notice of Allowance mailed Jan. 14, 2015, for U.S. Appl. No. 14/086,877, filed Nov. 21, 2013, eight pages.
Chinese Search Report mailed Feb. 2, 2015, for CN Application No. 201210568727.0, filed Jun. 8, 2007, two pages.
"Gesture Recognition," (2006). Located at <http://www.fingerworks.com/gesture_recognition.html>, last visited Jul. 25, 2006, two pages.
3M (2002). MicroTouch Capacitive Touch Screens Datasheets, 3M Innovation, six pages.
Agrawal, R. et al. (Jul. 1986). "An Overview of Tactile Sensing," Center for Research on Integrated Manufacturing: Robot Systems Division, The University of Michigan, 47 pages.
Anonymous. (May 8, 1992). "The Sensor Frame Graphic Manipulator," *NASA Phase II Final Report*, 28 pages.
Anonymous. (Oct. 30, 2001). "Radiotelephone with Rotating Symbol Keypad and Multi-Directional Symbol Input," located at www.vitgn.com/mobile_terminal.com, 12 pages.
Anonymous. "4-Wire Resistive Touchscreens" obtained from http://www.touchscreens.com/intro-touchtypes-4resistive.html generated Aug. 5, 2005.
Anonymous. "5-Wire Resistive Touchscreens" obtained from http://www.touchscreens.com/intro-touchtypes-resistive.html generated Aug. 5, 2005.
Anonymous. "A Brief Overview of Gesture Recognition" obtained from http://www. Dai. Ed. Ac.uk/Cvonline/LOCA_COPIES/COHEN/gesture_overview.Html, generated Apr. 20, 2004.
Anonymous. "Capacitive Position Sensing" obtained from http://www.synaptics.com/technology/cps.cfin generated Aug. 5, 2005.
Anonymous. "Capacitive Touchscreens" obtained from http://www.touchscreens.com/intro-touchtypes-capacitive.html generated Aug. 5, 2005.
Anonymous. "Comparing Touch Technologies" obtained from http://www.touchscreens.com/intro-touchtypes.html generated Oct. 10, 2004.
Anonymous. "FingerWorks—Gesture Guide—Application Switching," obtained from http://www.fingerworks.com/gesture_guide_apps.html, generated on Aug. 27, 2004, 1-pg.
Anonymous. "FingerWorks—Gesture Guide—Editing," obtained from http://www.fingerworks.com/gesure_guide_editing.html, generated on Aug. 27, 2004, 1-pg.
Anonymous. "FingerWorks—Gesture Guide—File Operations," obtained from http://www.fingerworks.com/gesture_guide_files.html, generated on Aug. 27, 2004, 1-pg.
Anonymous. "FingerWorks—Gesture Guide—Text Manipulation," obtained from http://www.fingerworks.com/gesture_guide_text_manip.html, generated on Aug. 27, 2004, 2-pg.
Anonymous. "FingerWorks—Gesture Guide—Tips and Tricks," obtained from http://www.fingerworks.com/gesture_guide_tips.html, generated Aug. 27, 2004, 2-pgs.

Anonymous. "FingerWorks—Gesture Guide—Web," obtained from http://www.fingerworks.com/gesture_guide_web.html, generated on Aug. 27, 2004, 1-pg.
Anonymous. "FingerWorks—Guide to Hand Gestures for USB Touchpads," obtained from http://www.fingerworks.com/igesture_userguide.html, generated Aug. 27, 2004, 1-pg.
Anonymous. "FingerWorks—iGesture—Technical Details," obtained from http://www.fingerworks.com/igesture_tech.html, generated Aug. 27, 2004, 1-pg.
Anonymous. "FingerWorks—The Only Touchpads with Ergonomic Full-Hand Resting and Relaxation!" obtained from http://www.fingerworks.com/resting.html, Copyright 2001, 1-pg.
Anonymous. "FingerWorks—Tips for Typing on the Mini," obtained from http://www.fingerworks.com/mini_typing.html, generated on Aug. 27, 2004, 2-pgs.
Anonymous. "GlidePoint®" obtained from http://www.cirque.com/technology/technology_gp.html generated Aug. 5, 2005.
Anonymous. "How do touchscreen monitors know where you're touching?" obtained from http://www.electronics.howstuffworks.com/question716.html generated Aug. 5, 2005.
Anonymous. "How does a touchscreen work?" obtained from http://www.touchscreens.com/intro-anatomy.html generated Aug. 5, 2005.
Anonymous. "iGesture Pad—the MultiFinger USB TouchPad with Whole-Hand Gestures," obtained from http://www.fingerworks.com/igesture.html, generated Aug. 27, 2004, 2-pgs.
Anonymous. "iGesture Products for Everyone (learn in minutes) Product Overview" FingerWorks.com downloaded Aug. 30, 2005.
Anonymous. "Infrared Touchscreens" obtained from http://www.touchscreens.com/intro-touchtypes-infrared.html generated Aug. 5, 2005.
Anonymous. "Mouse Emulation" FingerWorks obtained from http://www.fingerworks.com/gesture_guide_mouse.html generated Aug. 30, 2005.
Anonymous. "Mouse Gestures in Opera" obtained from http://www.opera.com/products/desktop/mouse/index.dml generated Aug. 30, 2005.
Anonymous. "Mouse Gestures," Optim oz, May 21, 2004.
Anonymous. "MultiTouch Overview" FingerWorks obtained from http://www.fingerworks.com/multoverview.html generated Aug. 30, 2005.
Anonymous. "Near Field Imaging Touchscreens" obtained from http://www.touchscreens.com/intro-touchtypes-nfi.html generated Aug. 5, 2005.
Anonymous. "PenTouch Capacitive Touchscreens" obtained from http://www.touchscreens.com/intro-touchtypes-pentouch.html generated Aug. 5, 2005.
Anonymous. "Surface Acoustic Wave Touchscreens" obtained from http://www.touchscreens.com/intro-touchtypes-saw.html generated Aug. 5, 2005.
Anonymous. "Symbol Commander" obtained from http://www.sensiva.com/symbolcommander/, generated Aug. 30, 2005.
Anonymous. "Tips for Typing" FingerWorks http://www.fingerworks.com/mini_typing.html generated Aug. 30, 2005.
Anonymous. "Touch Technologies Overview" 2001, 3M Touch Systems, Massachusetts.
Anonymous. "Touchscreen Technology Choices," <http://www.elotouch.com/products/detech2.asp>, downloaded Aug. 5, 2005.
Anonymous. "Wacom Components—Technology" obtained from http://www.wacom-components.com/english/tech.asp generated on Oct. 10, 2004.
Anonymous. "Watershed Algorithm" http://rsb.info.nih.gov/ij/plugins/watershed.html generated Aug. 5, 2005.
Baxter, L.K. (1996). *Capacitive Sensors: Design and Applications*, vol. 1 of IEEE Press Series on Electronics Technology, John Wiley & Sons: New York, NY, (Table of Contents Only) three pages.
Bennion, S.I. et al. (Dec. 1981). "Touch Sensitive Graphics Terminal Applied to Process Control," *Computer Graphics* 15(4):342-350.
Bier et al., "Toolglass and Magic Lenses: The see-through interface" In James Kijiya, editor, Computer Graphics (SIGGRAPH '93 Proceedings), vol. 27, pp. 73-80, Aug. 1993.
Boie, R.A. (Mar. 1984). "Capacitive Impedance Readout Tactile Image Sensor," *Proceedings of 1984 IEEE International Conference on Robotics and Automation*, pp. 370-378.
Buxton, W.A.S. (Mar./Apr. 1994). "Combined Keyboard/Touch Tablet Input Device," *XEROX Disclosure Journal* 19(2):109-111.
Chun, K. et al. (Jul. 1985). "A High-Performance Silicon Tactile Imager Based on a Capacitive Cell," *IEEE Transactions on Electron Devices* 32(7):1196-1201.
Cliff (Jul. 24, 2002). "Building a Pressure-Sensitive, Multi-Point TouchScreen?" Posted from the D-I-Y-Baby Department, one page.
Collberg, C. et al. (2002). "TetraTetris: A Study of Multi-User Touch-Based Interaction Using DiamondTouch," located at cs.arizona.edu, eight pages. (located information via Google).
Dannenberg, R.B. et al. (1989). "A Gesture Based User Interface Prototyping System," *ACM*, pp. 127-132.
Davies, E.R. (1990). *Machine Vision: Theory, Algorithms, Practicalities*, Academic Press, Inc..: San Diego, CA, pp. xi-xxi (Table of Contents Only).
Davies, E.R. (Aug. 1987). "Lateral Histograms for Efficient Object Location: Speed versus Ambiguity," *Pattern Recognition Letters* 6(3):189-198.
Davies, E.R. (1997). "Boundary Pattern Analysis," Chapter 7 in *Machine Vision: Theory, Algorithms, Practicalities*, 2nd Edition, Academic Press, Inc.: San Diego, CA, pp. 171-191.
Davies, E.R. (1997). "Ellipse Detection," Chapter 11 in *Machine Vision: Theory, Algorithms, Practicalilties*, 2nd Edition, Academic Press, Inc.: San Diego, CA, pp. 271-290.
Davies, E.R. (1997). "Image Acquisition," Chapter 23 in *Machine Vision: Theory, Algorithms, Practicalities*, 2nd Edition, Academic Press, Inc.: San Diego, CA, pp. 583-601.
Diaz-Marino, R.A. et al. (2003). "Programming for Multiple Touches and Multiple Users: A Toolkit for the DiamondTouch Hardware," *Proceedings of ACM UIST'03 User Interface Software and Technology*, two pages.
Dietz, P. et al. (2001). "DiamondTouch: A Multi-User Touch Technology," *Proceedings of the 14th Annual ACM Symposium on User Interface Software and Technology*, Nov. 11-14, 2001, Orlando, FL, pp. 219-226.
Douglas et al., *The Ergonomics of Computer Pointing Devices* (1997).
Esenther, A. et al. (Nov. 2002). "DiamondTouch SDK: Support for Multi-User, Multi-Touch Applications," *Mitsubishi Electric Research Laboratories, Inc.*, five pages.
European Search Report mailed Jul. 28, 2011, for EP Application No. 11159164.0, filed Jun. 8, 2007, eight pages.
European Search Report mailed Oct. 21, 2011, for EP Application No. 11159166.5, filed Jun. 8, 2007, seven pages.
European Search Report mailed Feb. 16, 2012, for EP Application No. 11183531.0, 11 pages.
European Search Report mailed Mar. 27, 2012, for EP Application No. 10178558.2, nine pages.
European Search Report received in EP 1 621 989 (@ *Beyer Weaver & Thomas, LLP*) dated Mar. 27, 2006.
EVB Elektronik "TSOP6238 IR Receiver Modules for Infrared Remote Control Systems" dated Jan. 2004 1-pg.
Fearing, R.S. (Jun. 1990). "Tactile Sensing Mechanisms," *The International Journal of Robotics Research* 9(3):3-23.
Final Office Action mailed Jul. 6, 2010, for U.S. Appl. No. 11/760,036, filed Jun. 8, 2007, 51 pages.
Final Office Action mailed Jul. 6, 2010, for U.S. Appl. No. 11/760,080, filed Jun. 8, 2007, 66 pages.
Final Office Action mailed Jul. 22, 2010, for U.S. Appl. No. 11/760,049, filed Jun. 8, 2007, 52 pages.
Final Office Action mailed Aug. 2, 2010, for U.S. Appl. No. 11/760,060, filed Jun. 8, 2007, 78 pages.
Final Office Action mailed Sep. 1, 2011, for U.S. Appl. No. 11/650,203, filed Jan. 3, 2007, nine pages.
Final Office Action mailed Oct. 17, 2011, for U.S. Appl. No. 11/818,395, filed Jun. 13, 2007, 16 pages.
Final Office Action mailed Dec. 16, 2011, for U.S. Appl. No. 11/760,036, filed Jun. 8, 2007, 53 pages.
Final Office Action mailed Jan. 30, 2012, for U.S. Appl. No. 11/760,049, filed Jun. 8, 2007, 64 pages.
Final Office Action mailed Feb. 27, 2012, for U.S. Appl. No. 11/760,080, filed Jun. 8, 2007, 62 pages.

Final Office Action mailed May 9, 2013, for U.S. Appl. No. 12/976,997 filed Dec. 22, 2010, 7 pages.
Fisher et al., "Repetitive Motion Disorders: The Design of Optimal Rate- Rest Profiles," Human Factors, 35(2):283-304 (Jun. 1993).
Fukumoto and Yoshinobu Tonomura, "Body Coupled Fingering: Wireless Wearable Keyboard," *CHI97*, pp. 147-154 (Mar. 1997).
Fukumoto et al., "ActiveClick: Tactile Feedback for Touch Panels," In CHI 2001 Summary, pp. 121-122, 2001.
Hardy, "Fingerworks" Mar. 7, 2002; BBC World On Line.
Hector, J. et al. (May 2002). "Low Power Driving Options for an AMLCD Mobile Display Chipset," Chapter 16.3 in *SID 02 Digest* (2002 SID International Symposium, Digest of Technical Papers), XXXIII(II):694-697.
Hillier and Gerald J. Lieberman, *Introduction to Operations Research* (1986).
Hinckley et al., "Touch-Sensing Input Devices," in CHI '99 Proceedings, pp. 223-230, 1999.
Hinckley, K. et al. (1998). "Interaction and Modeling Techniques for Desktop Two-Handed Input," *Proceedings of ACM USIT'98 Symposium on User Interface Software and Technology*, pp. 49-58.
Hinckley, K. et al. (May 1999). "Touch-Sensing Input Devices," *CHI* 99 pp. 223-230.
Hinckley, K. et al. (2000). "Sensing Techniques for Mobile Interaction," *CHI Letters* 2(2):91-100.
Hlady, A.M. (1969). "A Touch Sensitive X-Y Position Encoder for Computer Input," *Fall Joint Computer Conference*, pp. 545-551.
Hotelling et al., Office action for U.S. Appl. No. 10/840,862 mailed May 14, 2008.
International Search Report dated Mar. 3, 2006 (PCT/US 05/03325).
International search report for International Application No. PCT/US2005/014364 mailed Jan. 12, 2005.
International Search Report mailed Mar. 6, 2008, for PCT Application No. PCT/2007/70733, filed Jun. 8, 2007, five pages.
International Search Report mailed Mar. 7, 2008, for PCT Application No. PCT/2007/70722, filed Jun. 8, 2007, three pages.
International Search Report mailed Jun. 24, 2008, for PCT Application No. PCT/US2007/026298, filed Dec. 21, 2007, two pages.
International Search Report mailed Jul. 18, 2008, for PCT Application No. PCT/2007/70725, filed Jun. 8, 2007, six pages.
International Search Report mailed Jul. 18, 2008, for PCT Application No. PCT/2007/70729, filed Jun. 8, 2007, five pages.
International Search Report mailed Oct. 16, 2008, for PCT Application No. PCT/US2007/088749, filed Dec. 21, 2007, four pages.
International Search Report mailed Jun. 15, 2012, for PCT/US2011/064455, filed Dec. 12, 2011, four pages.
International Search Report received in corresponding PCT application No. PCT/US2006/008349 dated Oct. 6, 2006.
Jacob et al., "Integrality and Separability of Input Devices," *ACM Transactions on Computer-Human Interaction*, 1:3-26 (Mar. 1994).
Kanda, E. et al. (2008). "55.2: Integrated Active Matrix Capacitive Sensors for Touch Panel LTPS-TFT LCDs," *SID 08 Digest*, pp. 834-837.
Kinkley et al., "Touch-Sensing Input Devices," in CHI '99 Proceedings, pp. 223-230, 1999.
Kionx "KXP84 Series Summary Data Sheet" copyright 2005,dated Oct. 21, 2005, 4-pgs.
Kirk, D.E. (1970). "Numerical Determination of Optimal Trajectories," Chapter 6 in *Optimal Control Theory: An Introduction*, Prentice Hall, Inc.: Englewood Cliffs, NY, pp. 329-413, with Table of Contents, pp. vii-ix. (90 pages total).
Kling, M. et al. (Sep. 2003). "Interface Design: LCD Touch Interface for ETRAX 100LX," Thesis Submitted in Partial Fulfillment of the Requirements for the Degree of Master of Science, UMEA University, Umea, Sweden, 79 pages.
Ko, H. (Jul. 2000). "Open Systems Advanced Workstation Transition Report," Technical Report 1822, *U.S. Navy*, SSC San Diego, CA, 82 pages.
Krein, P. et al. (May/Jun. 1990). "The Electroquasistatics of the Capacitive Touch Panel," *IEEE Transactions on Industry Applications* 26(3):529-534.
Krueger, M. et al. (Jun. 10, 1988). "Videoplace, Responsive Environment, 1972-1990," located at http://www.youtube.com/watch?v=dmmxVA5xhuo, last visited Aug. 5, 2011, two pages.
Lee, "A Fast Multiple-Touch-Sensitive Input Device," Master's Thesis, University of Toronto. (1984).
Lee, S.K. et al. (Apr. 1985). "A Multi-Touch Three Dimensional Touch-Sensitive Tablet," *Proceedings of CHI: ACM Conference on Human Factors in Computing Systems*, pp. 21-25.
Leigh, J. et al. (2002). "Amplified Collaboration Environments," *VizGrid Symposium*, Nov. 2002, Tokyo, Japan, nine pages.
Ljungstrand, P. et al. eds. (2002). UBICOMP2002, Adjunct Proceedings, *4th International Conference on Ubiquitous Computing*, Sep. 29-Oct. 1, 2002, Goteborg, Sweden, 90 pages.
Magerkurth, C. et al. (2004). "Towards the Next Generation of Tabletop Gaming Experiences," *Graphics Interface 2004* (*GI'04*), May 17-19, 2004, Ontario, Canada, pp. 1-8.
Malik, S. et al. (2004). "Visual Touchpad: A Two-Handed Gestural Input Device," *ICMI'04 Proceedings of the 6th International Conference in Multimodal Intercases, ACM*, 8 pages.
Matsushita et al., "HoloWall: Designing a Finger, Hand, Body and Object Sensitive Wall," In Proceedings of UIST '97, Oct. 1997.
Matsushita, N. et al. (2000). "Dual Touch: A Two-Handed Interface for Pen-Based PDAs," *CHI Letters* 2(2):211-212.
McMillan, G.R. (Oct. 1998). "The Technology and Applications of Gesture-Based Control," *presented at the RTO Lecture Series on Alternative Control Technologies: Human Factor Issues*, Oct. 14-15, 1998, Ohio, USA, pp. 4-1-4-11.
Mehta, N. et al. (May 1982). "Feature Extraction as a Tool for Computer Input," *Proceedings of ICASSP '82*, May 3-5, 1982, Paris, France, pp. 818-820.
Mitchell, G. D. (Oct. 2003). "Orientation on Tabletop Displays," Thesis Submitted in Partial Fulfillment of the Requirements for the Degree of Master of Science, Simon Fraser University, 119 pages.
Netherlands Search Report dated Jul. 2, 2013, for Dutch Patent Application No. 2008003, ten pages.
Noda, K. et al. (2001). "Production of Transparent Conductive Films with Inserted SiO_2 Anchor Layer, and Application to a Resistive Touch Panel," *Electronics and Communications in Japan* Part 2 84(7):39-45.
Non-Final Office Action mailed May 14, 2008, for U.S. Appl. No. 10/840,862, filed May 6, 2004, six pages.
Non-Final Office Action mailed Dec. 24, 2008, for U.S. Appl. No. 10/840,862, filed May 6, 2004, nine pages.
Non-Final Office Action mailed Jun. 2, 2009, for U.S. Appl. No. 10/840,862, filed May 6, 2004, seven pages.
Non-Final Office Action mailed Nov. 12, 2009, for U.S. Appl. No. 10/840,862, filed May 6, 2004, eight pages.
Non-Final Office Action mailed Mar. 12, 2010, for U.S. Appl. No. 11/760,080, filed Jun. 8, 2007, 31 pages.
Non-Final Office Action mailed Apr. 22, 2010, for U.S. Appl. No. 11/760,036, filed Jun. 8, 2007, 37 pages.
Non-Final Office Action mailed Apr. 23, 2010, for U.S. Appl. No. 11/760,060, filed Jun. 8, 2007, 66 pages.
Non-Final Office Action mailed May 5, 2010, for U.S. Appl. No. 11/760,049, filed Jun. 8, 2007, 65 pages.
Non-Final Office Action mailed Jun. 21, 2010, for U.S. Appl. No. 11/650,203, filed Jan. 3, 2007, eight pages.
Non-Final Office Action mailed Jan. 25, 2011, for U.S. Appl. No. 11/818,395, filed Jun. 13, 2007, 31 pages.
Non-Final Office Action mailed Mar. 14, 2011, for U.S. Appl. No. 11/650,203, filed Jan. 3, 2007, nine pages.
Non-Final Office Action mailed May 13, 2011, for U.S. Appl. No. 12/267,540, filed Nov. 7, 2008, seven pages.
Non-Final Office Action mailed Jul. 8, 2011, for U.S. Appl. No. 12/267,532, filed Nov. 7, 2008, five pages.
Non-Final Office Action mailed Jul. 14, 2011, for U.S. U.S. Appl. No. 12/267,522, filed Nov. 7, 2008, six pages.
Non-Final Office Action mailed Aug. 4, 2011, for U.S. Appl. No. 11/760,036, filed Jun. 8, 2007, 45 pages.
Non-Final Office Action mailed Aug. 11, 2011, for U.S. Appl. No. 11/760,049, filed Jun. 8, 2007, 60 pages.
Non-Final Office Action mailed Sep. 1, 2011, for U.S. Appl. No. 11/760,060, filed Jun. 8, 2007, 76 pages.
Non-Final Office Action mailed Nov. 14, 2011, for U.S. Appl. No. 11/760,080, filed Jun. 8, 2007, 60 pages.

Non-Final Office Action mailed Feb. 17, 2012, for U.S. Appl. No. 13/251,099, filed Sep. 30, 2011, seven pages.
Non-Final Office Action mailed Jun. 20, 2012, for U.S. Appl. No. 13/345,347, filed Jan. 6, 2012, five pages.
Non-Final Office Action mailed Sep. 12, 2012, for U.S. Appl. No. 11/650,203, filed Jan. 3, 2007, nine pages.
Non-Final Office Action mailed Oct. 5, 2012, for U.S. Appl. No. 12/976,997, filed Dec. 22, 2010, 6 pages.
Non-Final Office Action mailed Oct. 11, 2012, for U.S. Appl. No. 13/538,498, filed Jun. 29, 2012, 17 pages.
Non-Final Office Action mailed Mar. 29, 2013, for U.S. Appl. No. 13/717,573, filed Dec. 17, 2012, five pages.
Non-Final Office Action mailed May 30, 2013, for U.S. Appl. No. 13/251,099, filed Sep. 30, 2011, seven pages.
Non-Final Office Action mailed Jun. 27, 2013, for U.S. Appl. No. 11/760,080 filed Jun. 8, 2007, 48 pages.
Non-Final Office Action mailed Dec. 30, 2013, for U.S. Appl. No. 12/976,997, filed Dec. 22, 2010, six pages.
Notice of Allowance mailed Oct. 25, 2011, for U.S. Appl. No. 12/267,540, filed Nov. 7, 2008, seven pages.
Notice of Allowance mailed Mar. 27, 2012, for U.S. Appl. No. 11/760,060, filed Jun. 8, 2007, 17 pages.
Notice of Allowance mailed Apr. 27, 2012, for U.S. Appl. No. 11/760,036, filed Jun. 8, 2007, eight pages.
Notice of Allowance mailed Jul. 12, 2012, for U.S. Appl. No. 13/251,099, filed Sep. 30, 2011, seven pages.
Notice of Allowance mailed Sep. 19, 2012, for U.S. Appl. No. 13/345,347, filed Jan. 6, 2012, seven pages.
Notice of Allowance mailed Oct. 29, 2012, for U.S. Appl. No. 13/345,347, filed Jan. 6, 2012, eight pages.
Notice of Allowance mailed Feb. 6, 2013, for U.S. Appl. No. 13/084,402, filed Apr. 11, 2011, 12 pages.
Notice of Allowance mailed Feb. 19, 2013, for U.S. Appl. No. 13/538,498, filed Jun. 29, 2012, 16 pages.
Notice of Allowance mailed Apr. 26, 2013, for U.S. Appl. No. 11/650,203, filed Jan. 3, 2007, 8 pages.
Notice of Allowance mailed May 28, 2013, for U.S. Appl. No. 11/760,049, filed Jun. 8, 2007, 10 pages.
Notice of Allowance mailed Jul. 19, 2013, for U.S. Appl. No. 13/717,573, filed Dec. 17, 2012, eight pages.
Notice of Allowance mailed Oct. 10, 2013, for U.S. Appl. No. 11/760,080, filed Jun. 8, 2007, ten pages.
Ogawa, H. et al. (1979). "Preprocessing for Chinese Character Recognition and Global Classification of Handwritten Chinese Characters," *Pattern Recognition* 11:1-7.
Partial European Search Report mailed Mar. 15, 2011, for EP Application No. 10178661.4, filed Jun. 8, 2007, six pages.
Partial European Search Report mailed Oct. 21, 2011, for EP Application No. 11159165.7 filed Jun. 8, 2007, seven pages.
Partial European Search Report mailed Oct. 24, 2011, for EP Application No. 11159167.3 filed Jun. 8, 2007, eight pages.
Phipps, C.A. (Spring 2003). "A Metric to Measure Whole Keyboard Index of Difficulty Based on Fitts' Law," A Dissertation Submitted in Partial Fulfillment of the Requirements for the Degree of Ph.D., 103 pages.
Quantum Research Group "QT510 / Qwheel $^{I\ M}$ Touch Slider IC" copyright 2004-2005, 14-pgs.
Quantum Research Group Ltd. (1997). QT9701B2 Datasheet, 30 pages.
Quantum Research Group Ltd. (1999). QProx™ QT60320 32-Key Qmatrix™ Charge-Transfer IC Datasheet, pp. 1-14.
Quantum Research Group Ltd. (2001). QT60325, QT60485, QT60645 32, 48, 64 Key QMatrix™ Keypanel Sensor Ics Datasheet, 42 pages.
Quantum Research Group Ltd. (2002). QMatrix™ QT60040 4-Key Charge-Transfer IC Datasheet, pp. 1-9.
Quantum Research Group Ltd. (Oct. 10, 2002). Quantum Research Application Note AN-KDO1: Qmatrix™ Panel Design Guidelines, four pages.
Quek, "Unencumbered Gestural Interaction," *IEEE Multimedia*, 3:36-47 (Winter 1996).
Rabuffetti, M. (2002). "Touch-screen System for Assessing Visuomotor Exploratory Skills in Neuropsychological Disorders of Spatial Cognition," *Medical & Biological Engineering & Computing* 40:675-686.
Radwin, "Activation Force and Travel Effects on Overexertion in Repetitive Key Tapping," *Human Factors*, 39(1):130-140 (Mar. 1997).
Raisamo, R. (Dec. 7, 1999). "Multimodal Human-Computer Interaction: A Constructive and Empirical Study," Dissertation, University of Tampere, Finland, 86 pages.
Rekimoto et al., "ToolStone: Effective Use of the Physical Manipulation Vocabularies of Input Devices," In Proc. of UIST 2000, 2000.
Rekimoto, J. (2002). "SmartSkin: An Infrastructure for Freehand Manipulation on Interactive Surfaces," *CHI 2002*, Apr. 20-25, 2002. [(Apr. 25, 2002). 4(1):113-120.]
Rekimoto, J. et al. (2003). "Pre-Sense: Interaction Techniques for Finger Sensing Input Devices," *CHI Letters* 5(2):203-212.
Request for Ex Parte Reexamination of U.S. Pat. No. 7,663,607, 106 pages.
Rong, J. et al. (2002). "AIAA 2002-4553: Hierarchical Agent Based System for General Aviation CD&R Under Free Flight,"*AIAA Guidance, Navigation, and Control Conference and Exhibit*, Aug. 5-8, 2002, Monterey, CA, pp. 1-11.
Rubine et al., "Programmable Finger-Tracking Instrument Controllers," *Computer Music Journal*, vol. 14, No. 1 (Spring 1990).
Rubine, D. (Jul. 1991). "Specifying Gestures by Example," *Computer Graphics* 25(4):329-337.
Rubine, D. et al. (1988). "The VideoHarp," *Proceedings of the 14th International Computer Music Conference*, Cologne, W. Germany, Sep. 20-25, 1988, pp. 49-55.
Rubine, D. et al. (1991). "The Videoharp: An Optical Scanning MIDI Controller," *Contemporary Music Review* 6(1):31-46.
Rubine, D.H. (Dec. 1991). "The Automatic Recognition of Gestures," CMU-CS-91-202, Submitted in Partial Fulfillment of the Requirements of the Degree of Doctor of Philosophy in Computer Science at Carnegie Mellon University, 285 pages.
Rubine, D.H. (May 1992). "Combining Gestures and Direct Manipulation," CHI '92, pp. 659-660.
Russell, D.M. et al. (2004). "The Use Patterns of Large, Interactive Display Surfaces: Case Studies of Media Design and use for BlueBoard and MERBoard," *Proceedings of the 37th Hawaii International Conference on System Sciences 2004, IEEE*, pp. 1-10.
Rutledge et al., "Force-To-Motion Functions for Pointing," Human-Computer Interaction—Interact (1990).
Sears, A. (Mar. 11, 1991). "Improving Touchscreen Keyboards: Design Issues and a Comparison with Other Devices," *Human-Computer Interaction Laboratory*, pp. 1-19.
Sears, A. et al. (Jun. 1990). "A New Era for High-Precision Touchscreens," *Advances in Human-Computer Interaction*, vol. 3, Tech Report HCIL-90-01, one page only.
Segen, J. et al. (1998). "Human-Computer Interaction Using Gesture Recognition and 3D Hand Tracking," *IEEE*, pp. 188-192.
Shen, C. et al. (Jan. 2004). "DiamondSpin: An Extensible Toolkit for Around-the-Table Interaction," *CHI 2004*, Apr. 24-29, 2004, Vienna, Austria, 10 pgs.
Siegel, D.M. et al. (1987). "Performance Analysis of a Tactile Sensor," *IEEE*, pp. 1493-1499.
Singapore Examination Report mailed Jan. 11, 2010, for SG Patent Application No. 0607116-1, five pages.
Son, J.S. et al. (1996). "Comparison of Contact Sensor Localization Abilities During Manipulation," *Robotics and Autonomous System 17* pp. 217-233.
Stansfield, S.A. (Mar. 1990). "Haptic Perception With an Articulated, Sensate Robot Hand," *SANDIA Report*: SAND90 - 0085 - UC-406, 37 pages.
Stauffer, R.N. ed. (Jun. 1983). "Progress in Tactile Sensor Development," *Robotics Today* pp. 43-49.
Stumpe, B. (Mar. 16, 1977). "A New Principle for an X-Y Touch Screen," *CERN*, 19 pages.
Stumpe, B. (Feb. 6, 1978). "Experiments to Find a Manufacturing Process for an X-Y Touch Screen: Report on a Visit to Polymer-Physik GmbH," *CERN*, five pages.

Subatai Ahmad, "A Usable Real-Time 3D Hand Tracker," Proceedings of the 28th Asilomar Conference on Signals, Systems and Computers—Part 2 (of2), vol. 2 (Oct. 1994).
Sugiyama, S. et al. (Mar. 1990). "Tactile Image Detection Using a 1k-element Silicon Pressure Sensor Array," *Sensors and Actuators* A21-A23(1-3):397-400.
Suzuki, K. et al. (Aug. 1990). "A 1024-Element High-Performance Silicon Tactile Imager," *IEEE Transactions on Electron Devices* 37(8):1852-1860.
Texas Instruments "TSC2003 / I2C Touch Screen Controller" Data Sheet SBAS 162, dated Oct. 2001, 20-pgs.
TW Search Report mailed Jun. 27, 2011, for TW Patent Application No. 097100481, one page.
U.S. Appl. No. 10/789,676, filed Feb. 27, 2004 entitled "Shape Detecting Input Device."
U.S. Appl. No. 11/015,978, filed Dec. 17, 2004.
U.S. Appl. No. 60/072,509, filed Jan. 26, 1998, by Westerman et al.
U.S. Appl. No. 60/333,770, filed Nov. 29, 2001, by Perski et al.
U.S. Appl. No. 60/406,662, filed Aug. 29, 2002, by Morag et al.
U.S. Appl. No. 60/501,484, filed Sep. 5, 2003, by Perski et al.
Van Kleek, M. (Feb. 2003). "Intelligent Environments for Informal Public Spaces: The Ki/o Kiosk Platform," Thesis Submitted in Partial Fulfillment of the Requirements for the Degree of Master of Engineering, MIT, 108 pages.
Van Oversteegen, B.G.F.A.W. (Apr. 10, 1998). "Touch Screen Based Measuring Equipment: Design and Implementation," Master's Thesis, Submitted to Technische Universiteit, Eindhoven, The Nederlands, 103 pages.
Vazquez, A.A. (Sep. 1990). "Touch Screen Use on Flight Simulator Instructor/Operator Stations," Thesis Submitted in Partial Fulfillment of the Requirements for the Degree of Master of Science in Information Systems, 78 pages.
Vernier, F. et al. (2002). "Multi-User, Multi-Finger Drag & Drop of Multiple Documents," located at http://www.edgelab.ca/CSCW/Workshop2002/fred_vernier, three pages.
Wacom Company Limited. (Nov. 12, 2003). Wacom intuos® User's Manual for Windows®, English V4.1, 165 pages.
Wallergard, M. (2003). "Designing Virtual Environments for Brain Injury Rehabilitation," Thesis, Lund University, Sweden, 98 pages.
Wellner, "The Digital Desk Calculators: Tangible Manipulation on a Desk Top Display" in ACM UIST '91 Proceedings, pp. 27-34, Nov. 1991.
Westerman, W. (Spring 1999). "Hand Tracking, Finger Identification, and Chordic Manipulation on a Multi-Touch Surface," A Dissertation Submitted to the Faculty of the University of Delaware in Partial Fulfillment of the Requirements for the Degree of Doctor of Philosophy in Electrical Engineering, 364 pages.
Westerman, W. et al. (2001). "Multi-Touch: A New Tactile 2-D Gesture Interface for Human-Computer Interaction," *Proceedings of the Human Factors and Ergonomics Societ 45th Annual Meeting*, pp. 632-636.
Williams, "Applications for a Switched-Capacitor Instrumentation Building Block" Linear Technology Application Note 3, Jul. 1985, pp. 1-16.
Wu, M. et al. (2003). "Multi-Finger and Whole Hand Gestural Interaction Techniques for Multi-User Tabletop Displays," *ACM* pp. 193-202.
Yamada et al., "A Switched-Capacitor Interface for Capacitive Pressure Sensors" IEEE Transactions on Instrumentation and Measurement, vol. 41, No. 1, Feb. 1992, pp. 81-86.
Yee, K-P. (2004). "Two-Handed Interaction on a Tablet Display," CHI'04, pp. 1493-1496.
Yeh et al., "Switched Capacitor Interface Circuit for Capacitive Transducers" 1985 IEEE.
Zhai et al., "Dual Stream Input for Pointing and Scrolling," *Proceedings of CHI '97 Extended Abstracts* (1997).
Zimmerman et al., "Applying Electric Field Sensing to Human-Computer Interfaces," in CHI '85 Proceedings, pp. 280-287, 1995.
Non-Final Office Action mailed May 12, 2015, for U.S. Appl. No. 14/670,306, filed Mar. 26, 2015, five pages.
Notice of Allowance mailed May 28, 2015, for U.S. Appl. No. 14/666,174, filed Mar. 23, 2015, eight pages.
Notice of Allowance mailed Jun. 29, 2015, for U.S. Appl. No. 14/047,960, filed Oct. 7, 2013, 11 pages.
Notice of Allowance (corrected) mailed Jul. 2, 2015, for U.S. Appl. No. 14/666,174, filed Mar. 23, 2015, five pages.

* cited by examiner

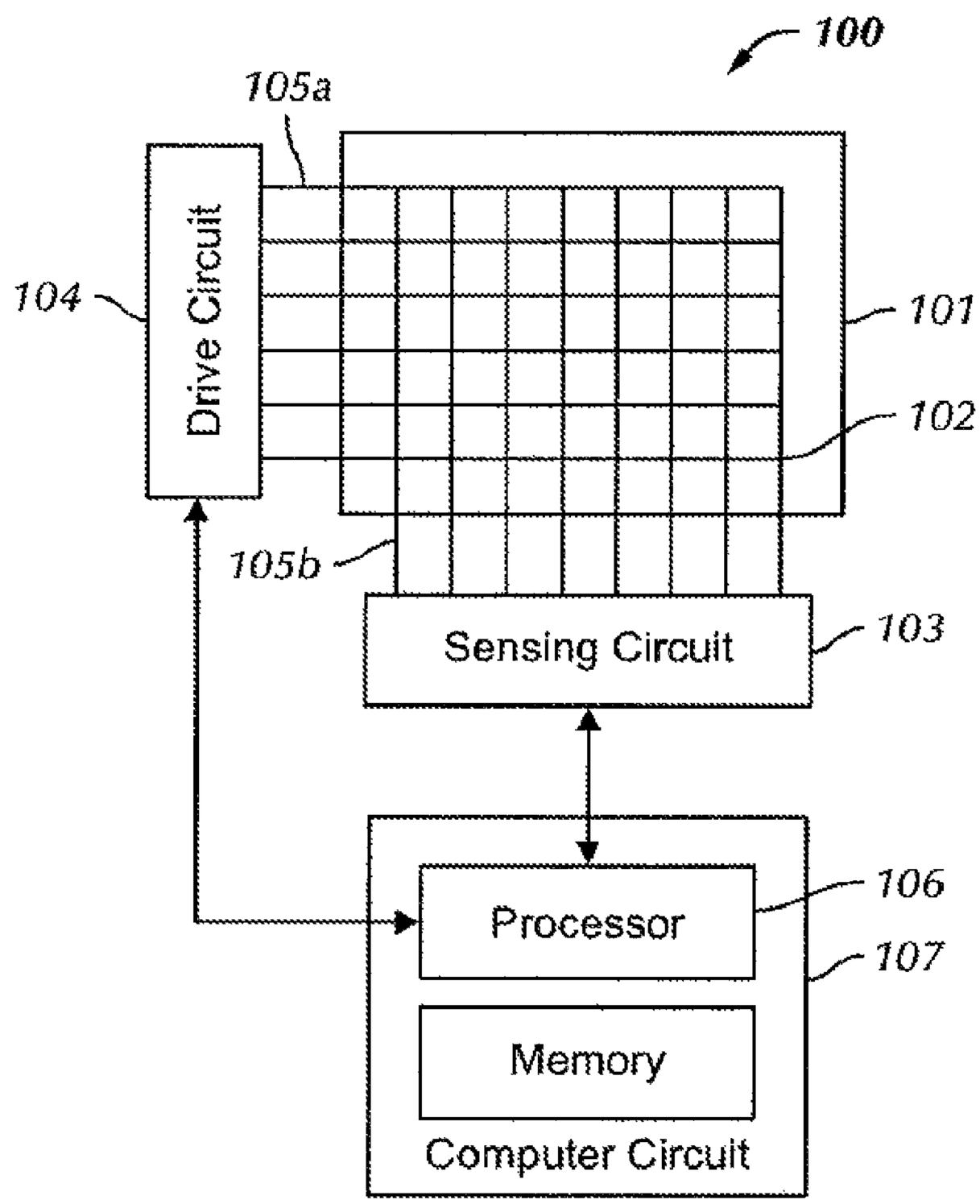
100
105a
104
Drive Circuit
101
102
105b
Sensing Circuit
103
Processor
106
107
Memory
Computer Circuit

FIG. 1

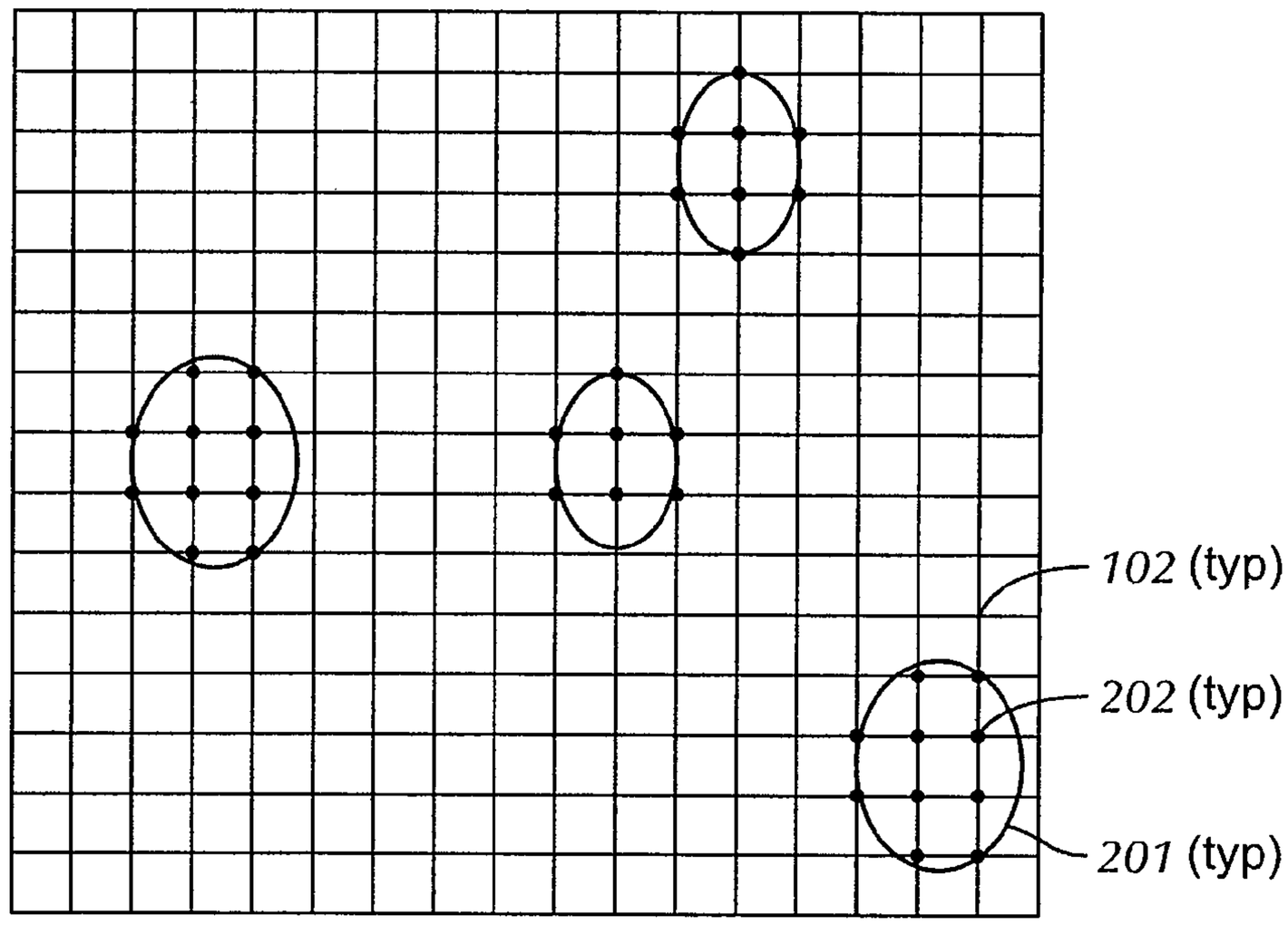

FIG. 2

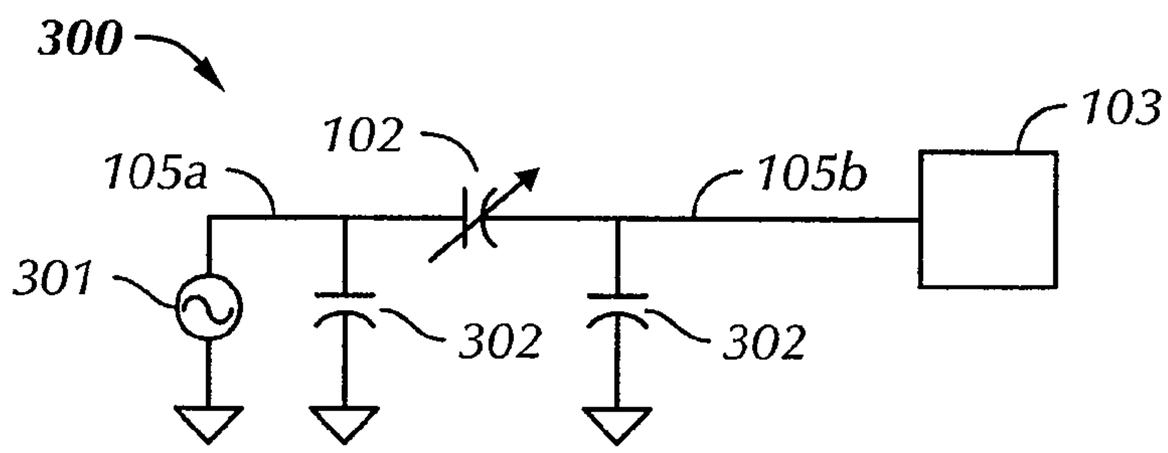

FIG. 3

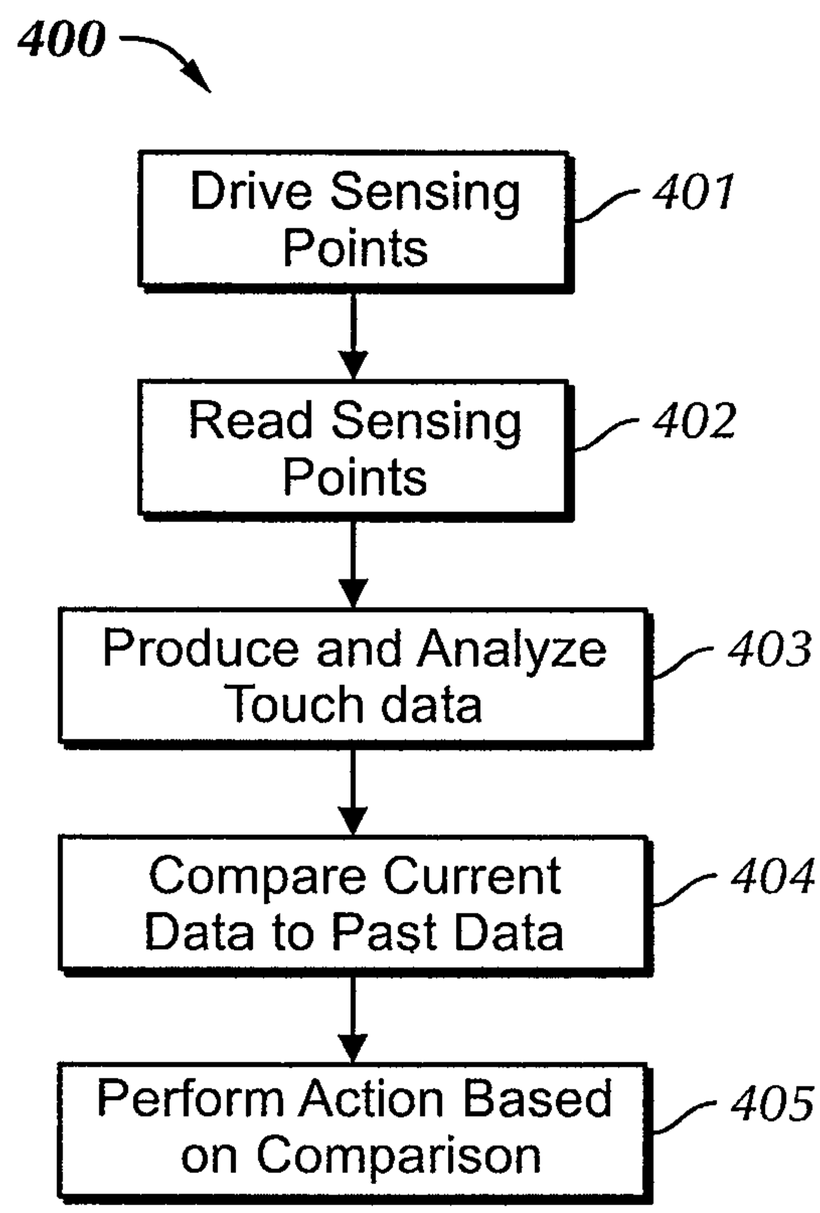
400
Drive Sensing Points
401
Read Sensing Points
402
Produce and Analyze Touch data
403
Compare Current Data to Past Data
404
Perform Action Based on Comparison
405

FIG. 4

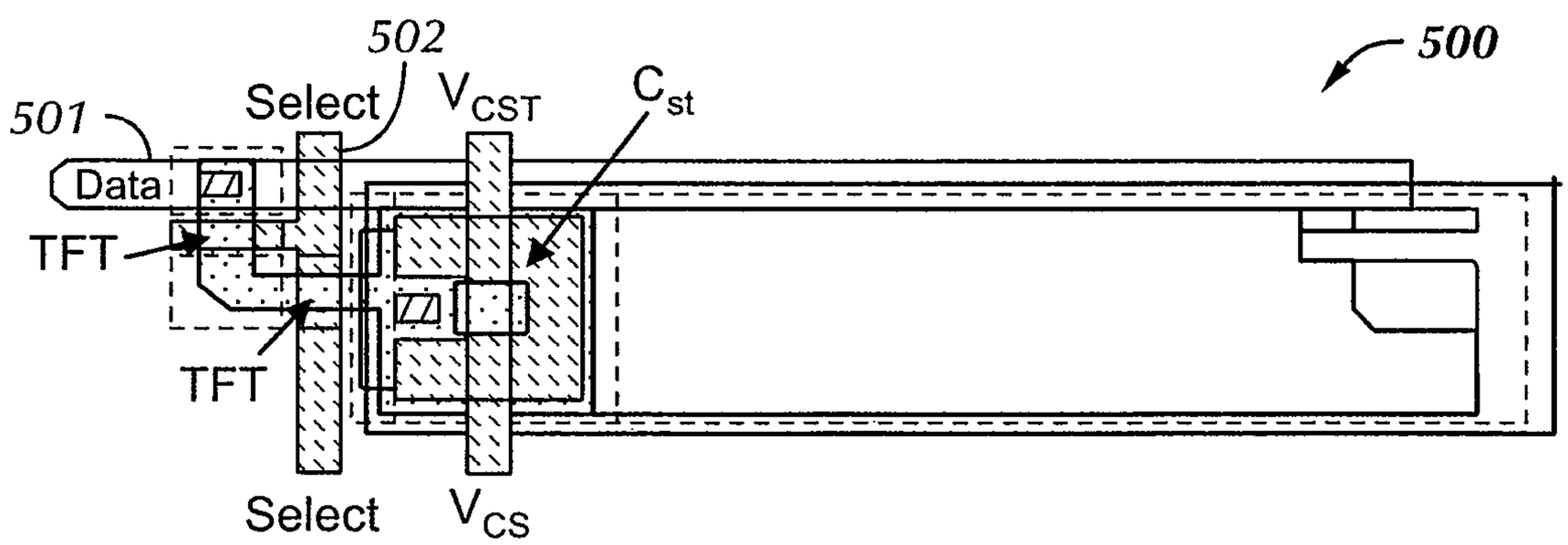
502
Select
V_{CST}
C_{st}
500
501
Data
TFT
TFT
Select
V_{CS}

FIG. 5

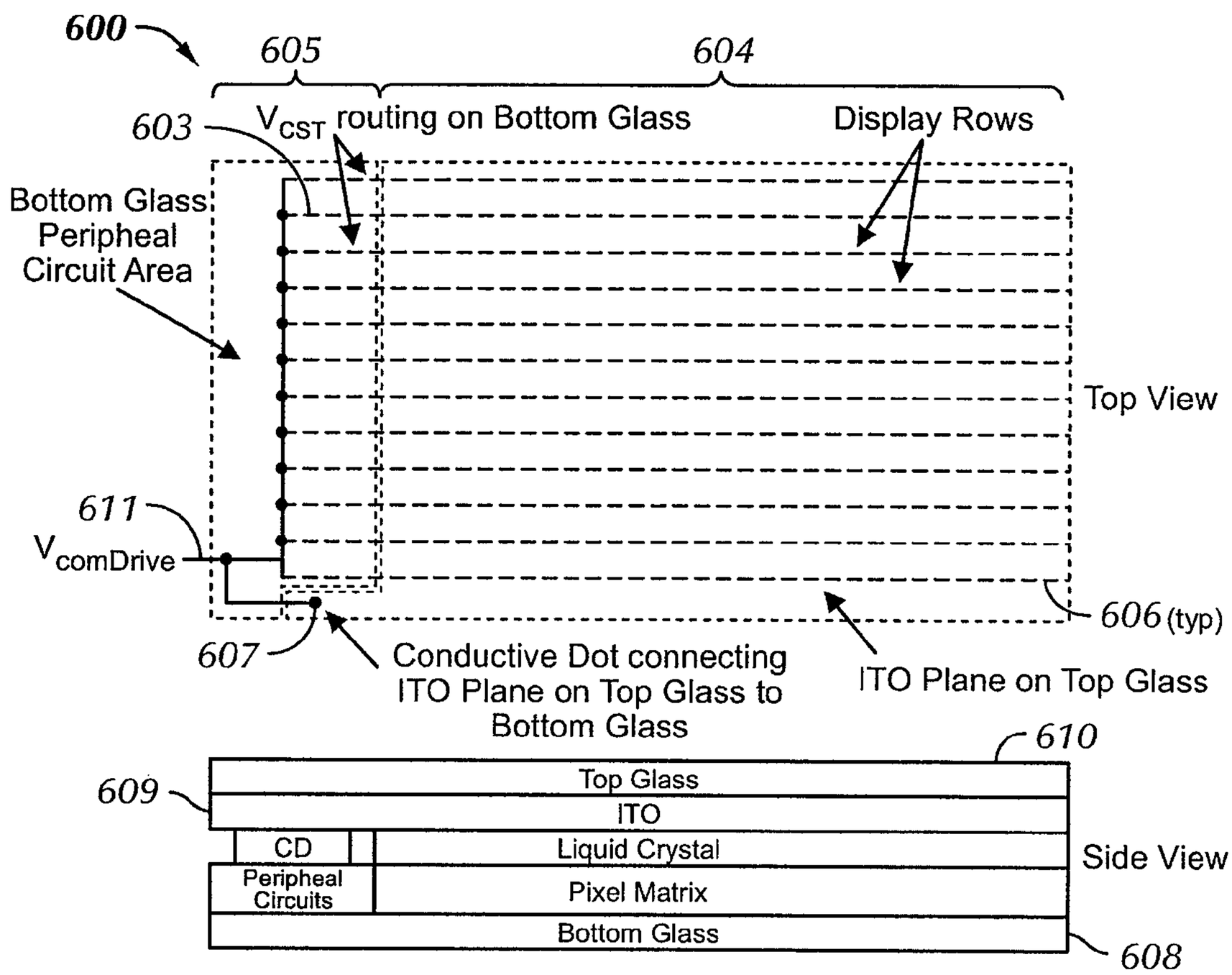
600
605
604
603
V_{CST} routing on Bottom Glass
Display Rows
Bottom Glass Peripheal Circuit Area
Top View
611
$V_{comDrive}$
606 (typ)
607
Conductive Dot connecting ITO Plane on Top Glass to Bottom Glass
ITO Plane on Top Glass
610
609
Top Glass
ITO
CD
Liquid Crystal
Peripheal Circuits
Pixel Matrix
Bottom Glass
Side View
608

FIG. 6

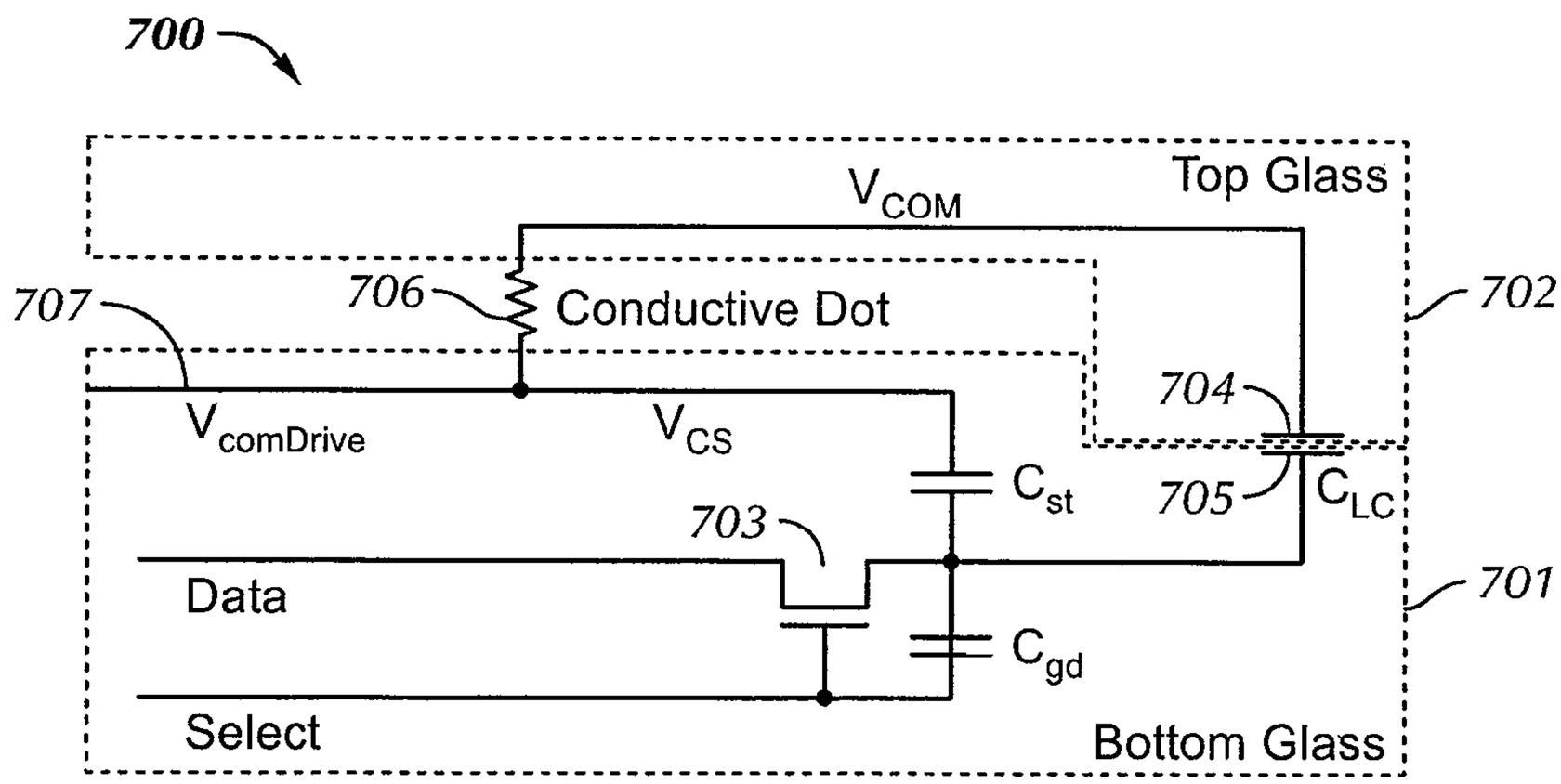
700
V_{COM}
Top Glass
707
706
Conductive Dot
702
704
$V_{comDrive}$
V_{CS}
C_{st}
705
C_{LC}
703
Data
701
C_{gd}
Select
Bottom Glass

FIG. 7

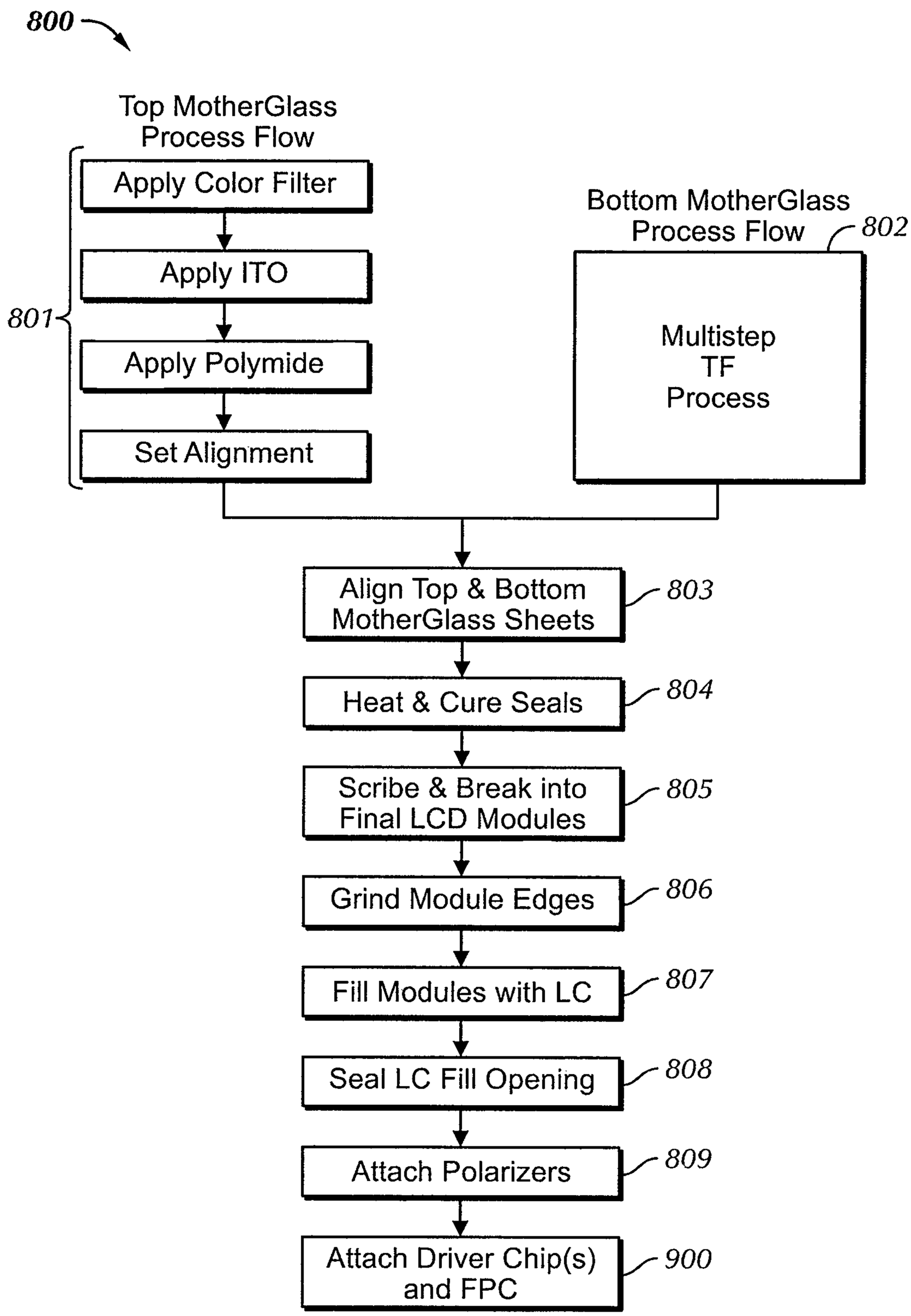
800
Top MotherGlass Process Flow
Apply Color Filter
Apply ITO
Apply Polymide
Set Alignment
801
Bottom MotherGlass Process Flow
802
Multistep TF Process
Align Top & Bottom MotherGlass Sheets
803
Heat & Cure Seals
804
Scribe & Break into Final LCD Modules
805
Grind Module Edges
806
Fill Modules with LC
807
Seal LC Fill Opening
808
Attach Polarizers
809
Attach Driver Chip(s) and FPC
900

FIG. 8

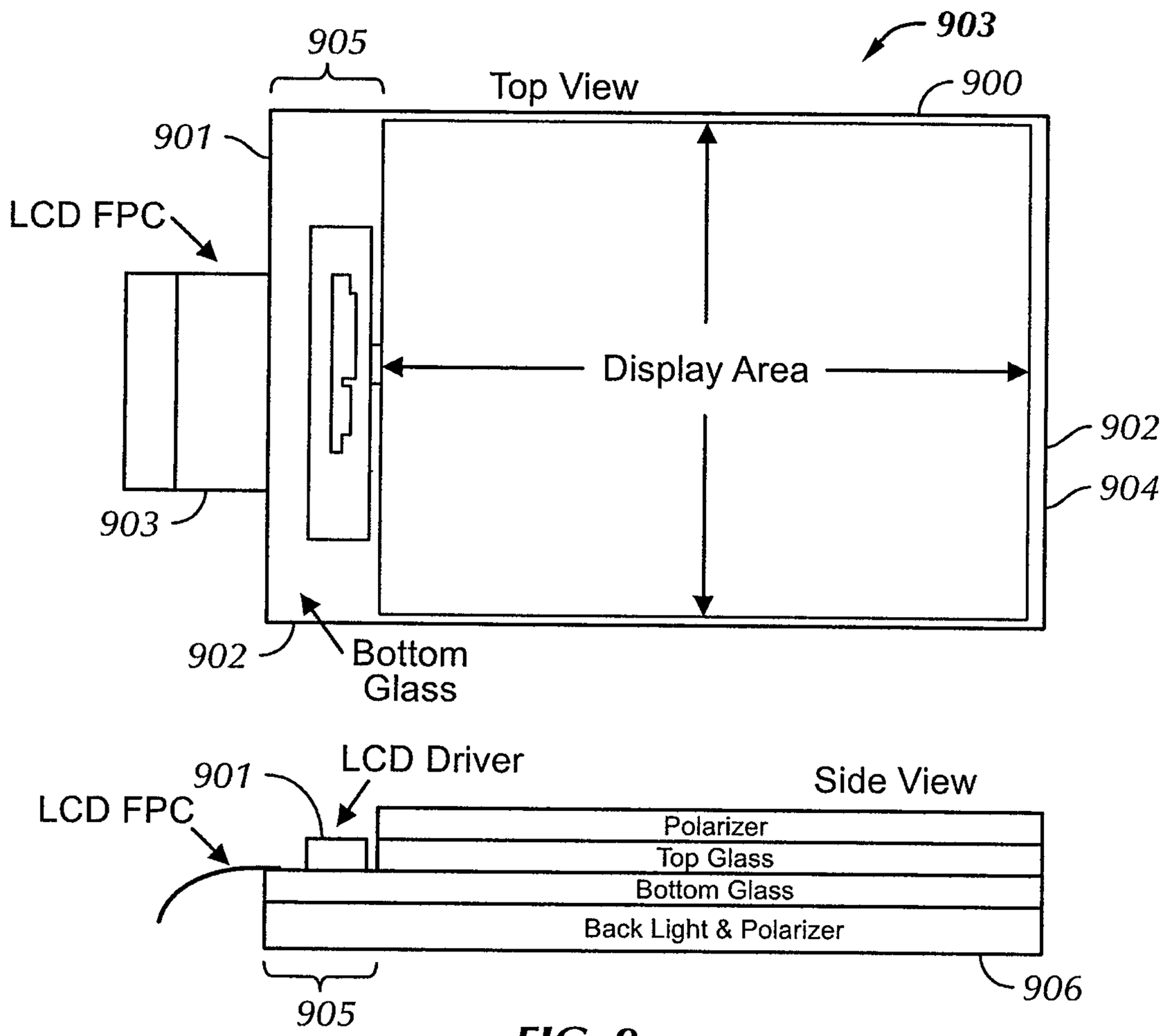
903
905
Top View
900
901
LCD FPC
Display Area
902
904
903
902
Bottom
Glass
LCD Driver
901
Side View
LCD FPC
Polarizer
Top Glass
Bottom Glass
Back Light & Polarizer
905
906

FIG. 9

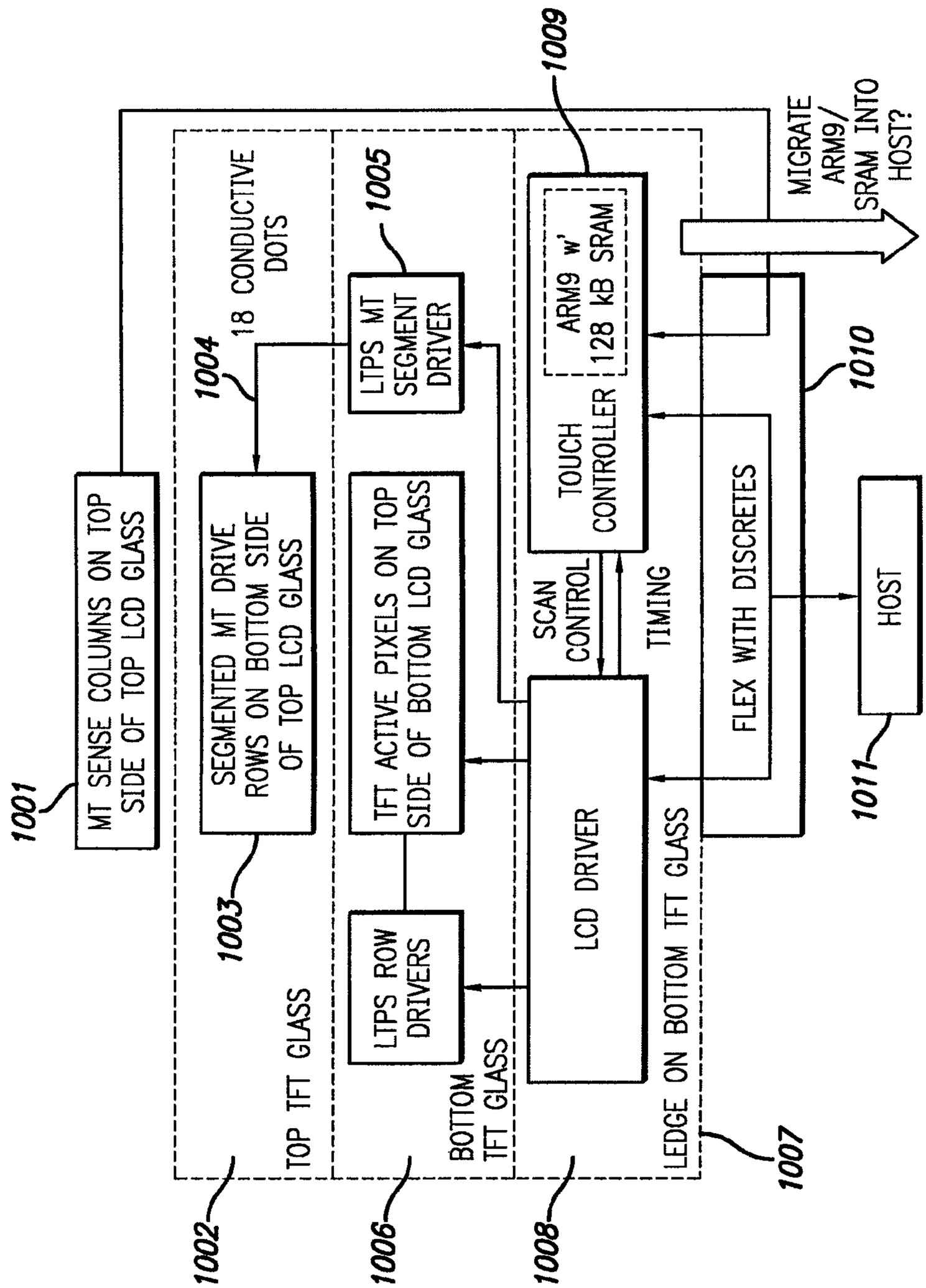
1001
MT SENSE COLUMNS ON TOP SIDE OF TOP LCD GLASS
1002
TOP TFT GLASS
1003
SEGMENTED MT DRIVE ROWS ON BOTTOM SIDE OF TOP LCD GLASS
1004
18 CONDUCTIVE DOTS
1005
LTPS MT SEGMENT DRIVER
1006
BOTTOM TFT GLASS
TFT ACTIVE PIXELS ON TOP SIDE OF BOTTOM LCD GLASS
LTPS ROW DRIVERS
1008
LCD DRIVER
SCAN CONTROL
TIMING
1009
TOUCH CONTROLLER
ARM9 w' 128 kB SRAM
1007
LEDGE ON BOTTOM TFT GLASS
FLEX WITH DISCRETES
1010
MIGRATE ARM9/ SRAM INTO HOST?
1011
HOST

FIG. 10

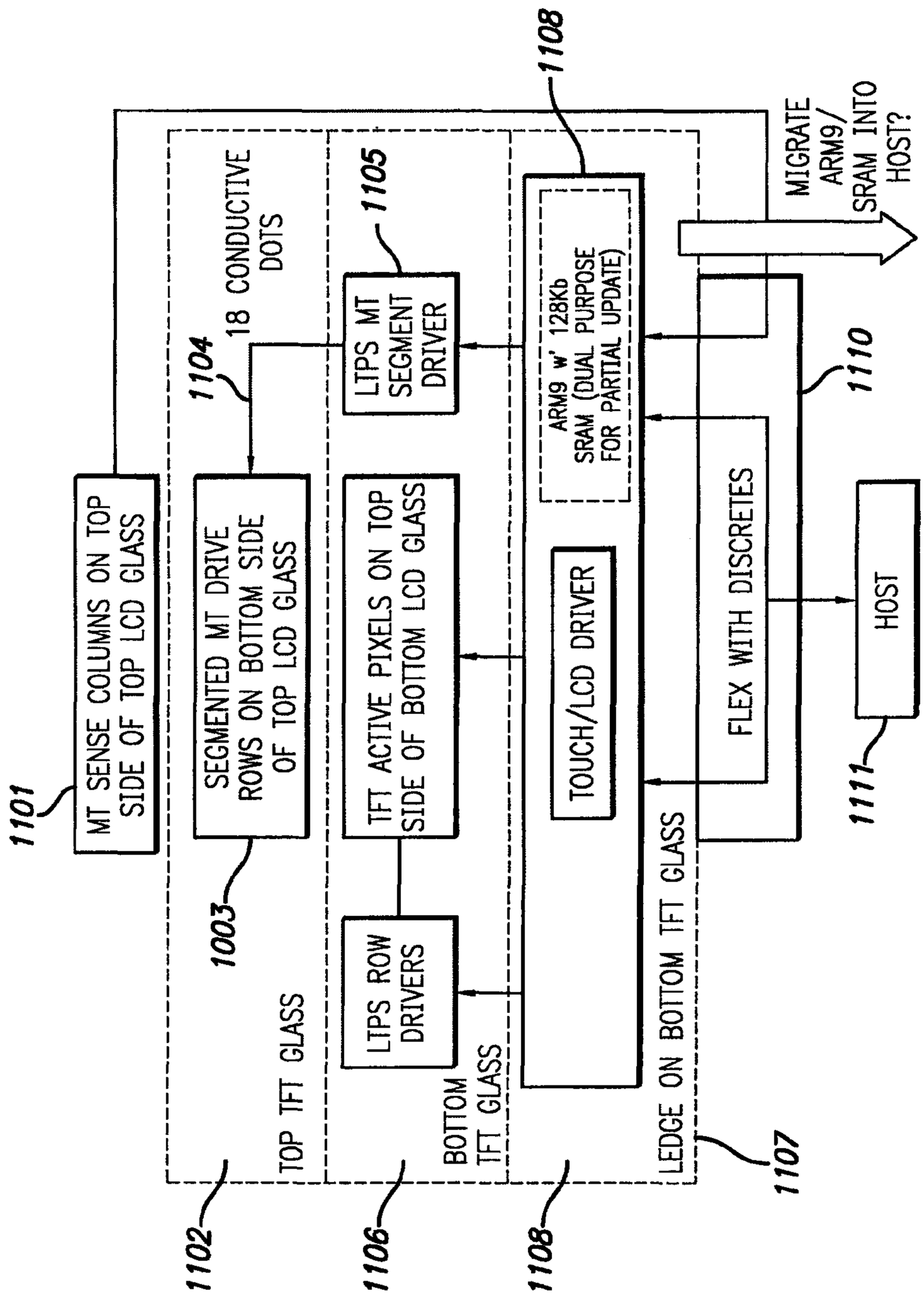
1101
MT SENSE COLUMNS ON TOP SIDE OF TOP LCD GLASS
1003
SEGMENTED MT DRIVE ROWS ON BOTTOM SIDE OF TOP LCD GLASS
1104
18 CONDUCTIVE DOTS
1105
LTPS MT SEGMENT DRIVER
TFT ACTIVE PIXELS ON TOP SIDE OF BOTTOM LCD GLASS
LTPS ROW DRIVERS
1108
ARM9 w' 128Kb SRAM (DUAL PURPOSE FOR PARTIAL UPDATE)
TOUCH/LCD DRIVER
MIGRATE ARM9/ SRAM INTO HOST?
1110
FLEX WITH DISCRETES
HOST
1111
TOP TFT GLASS
BOTTOM TFT GLASS
LEDGE ON BOTTOM TFT GLASS
1102
1106
1108
1107

FIG. 11

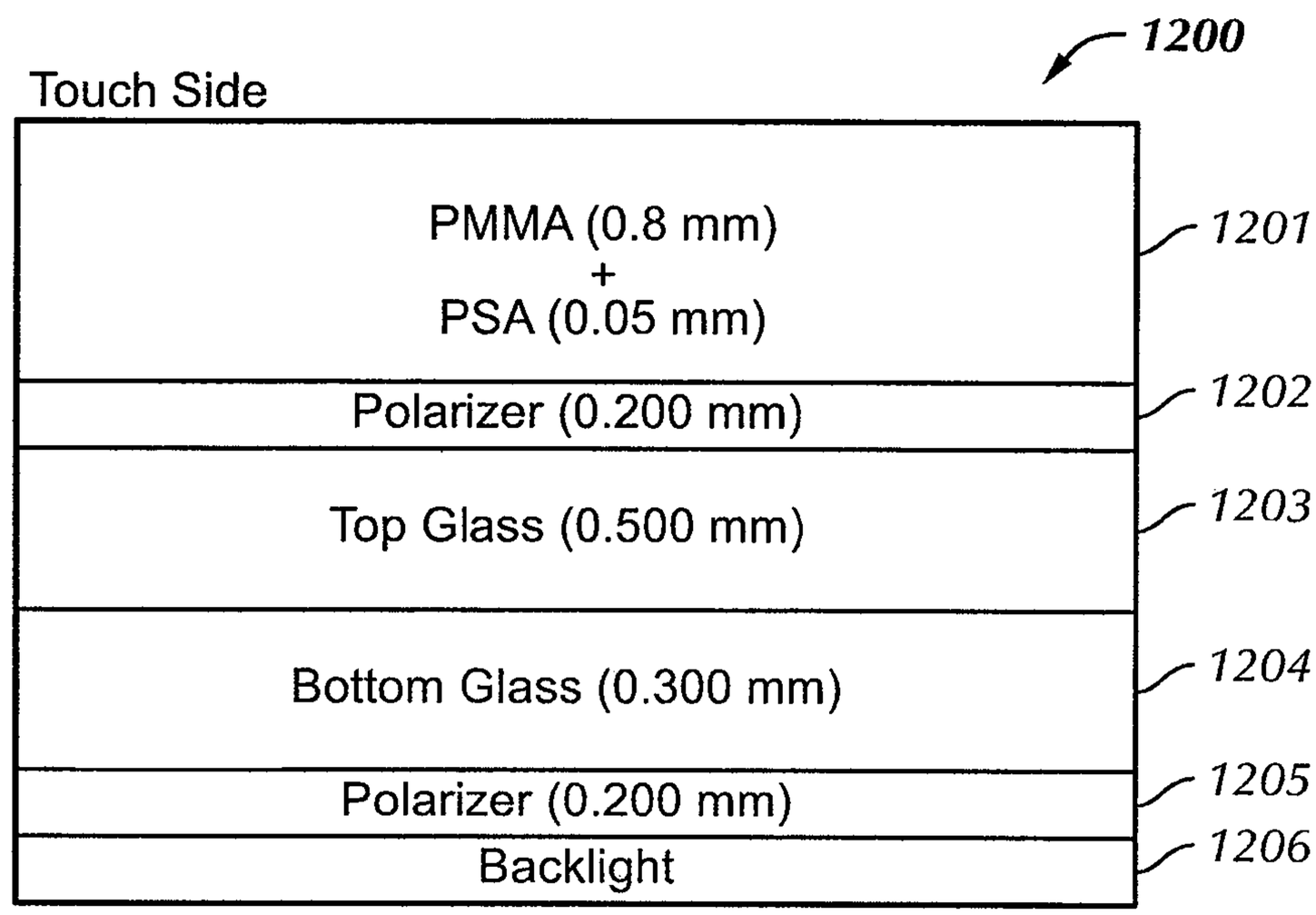
1200
Touch Side
PMMA (0.8 mm)
+
PSA (0.05 mm)
1201
Polarizer (0.200 mm)
1202
Top Glass (0.500 mm)
1203
Bottom Glass (0.300 mm)
1204
Polarizer (0.200 mm)
1205
Backlight
1206

FIG. 12

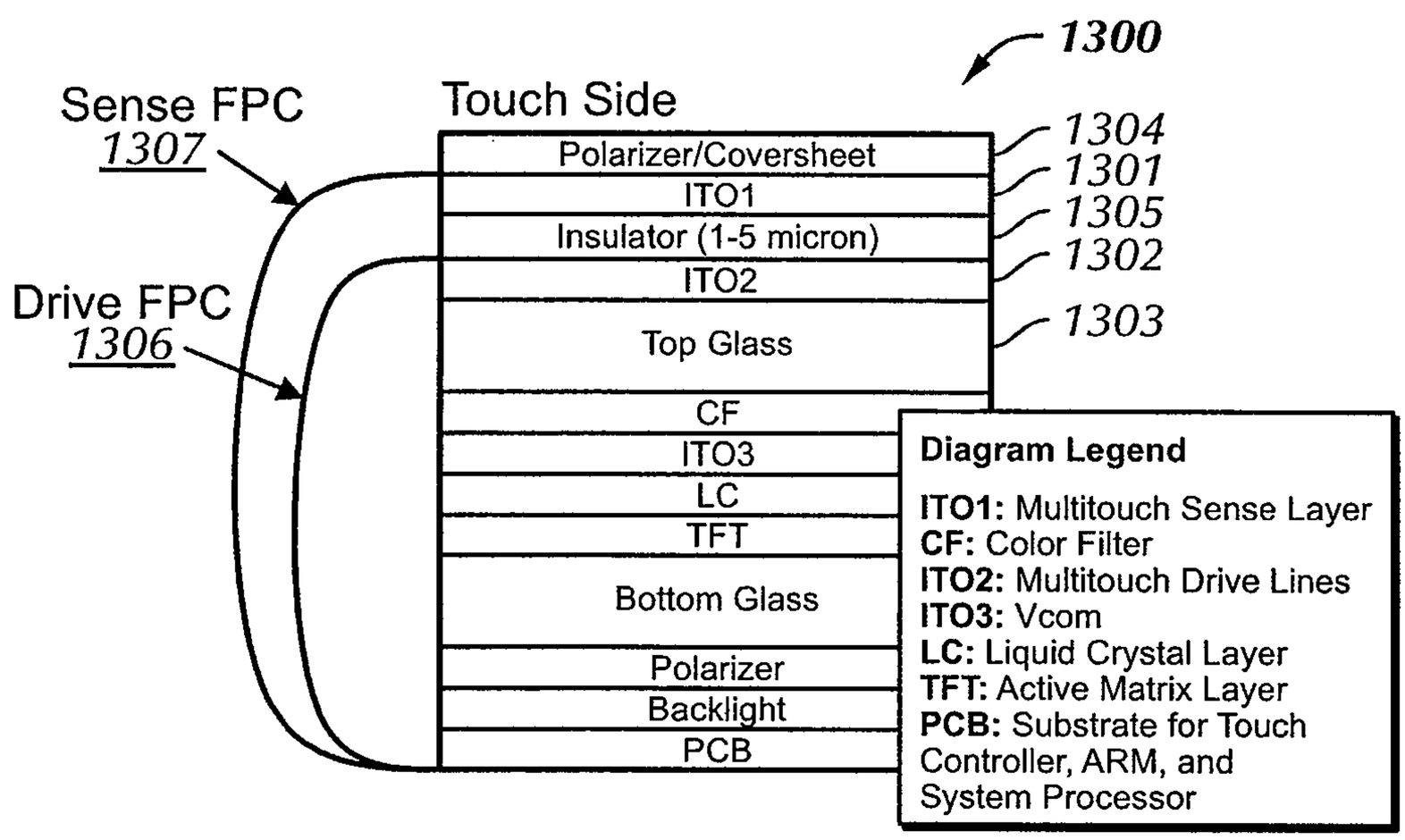
1300
Sense FPC
1307
Touch Side
Drive FPC
1306
Polarizer/Coversheet
1304
ITO1
1301
Insulator (1-5 micron)
1305
ITO2
1302
Top Glass
1303
CF
ITO3
LC
TFT
Bottom Glass
Polarizer
Backlight
PCB
Diagram Legend
ITO1: Multitouch Sense Layer
CF: Color Filter
ITO2: Multitouch Drive Lines
ITO3: Vcom
LC: Liquid Crystal Layer
TFT: Active Matrix Layer
PCB: Substrate for Touch Controller, ARM, and System Processor

FIG. 13

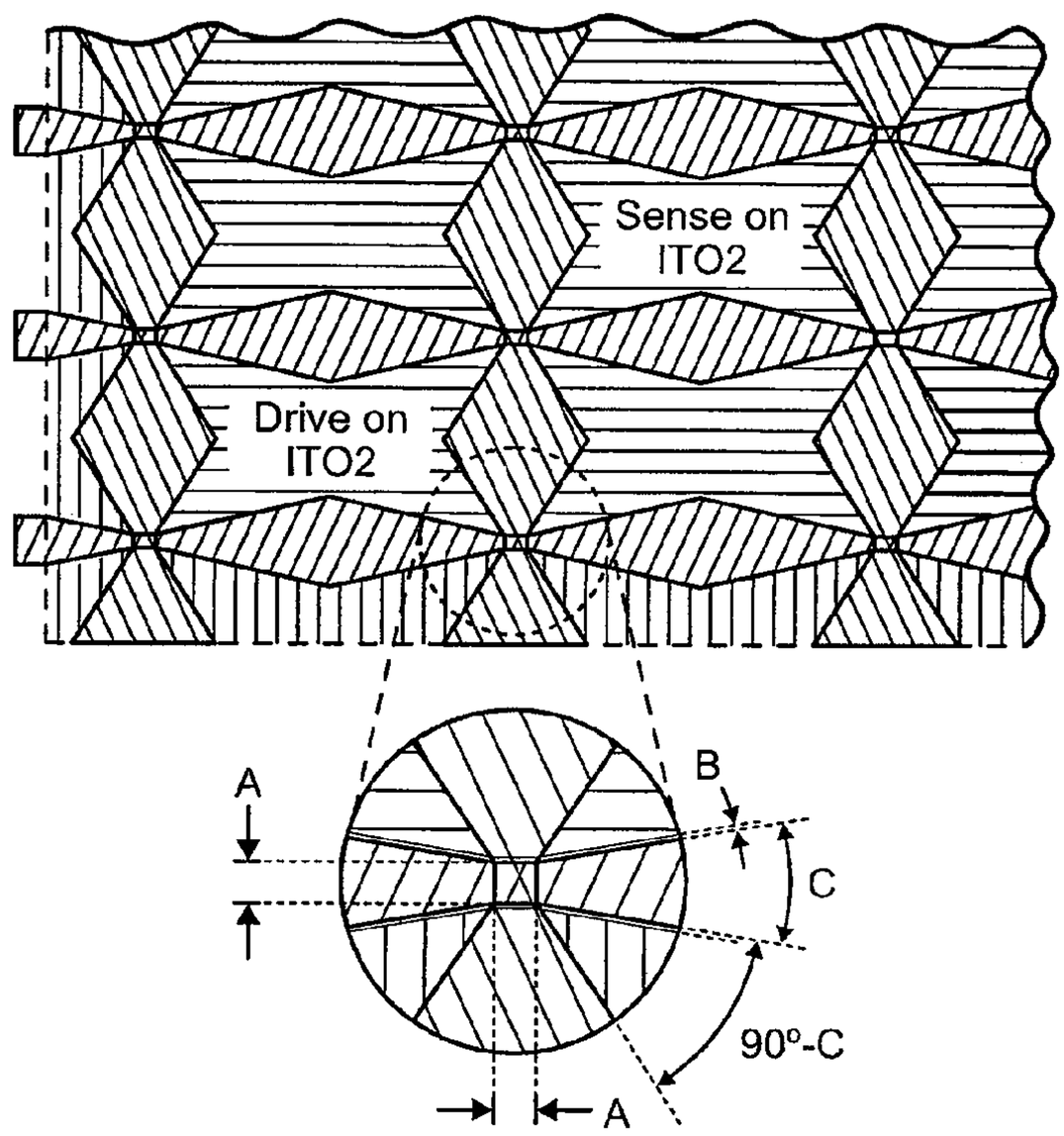
Sense on
ITO2
Drive on
ITO2
A
B
C
90°-C
A

FIG. 14

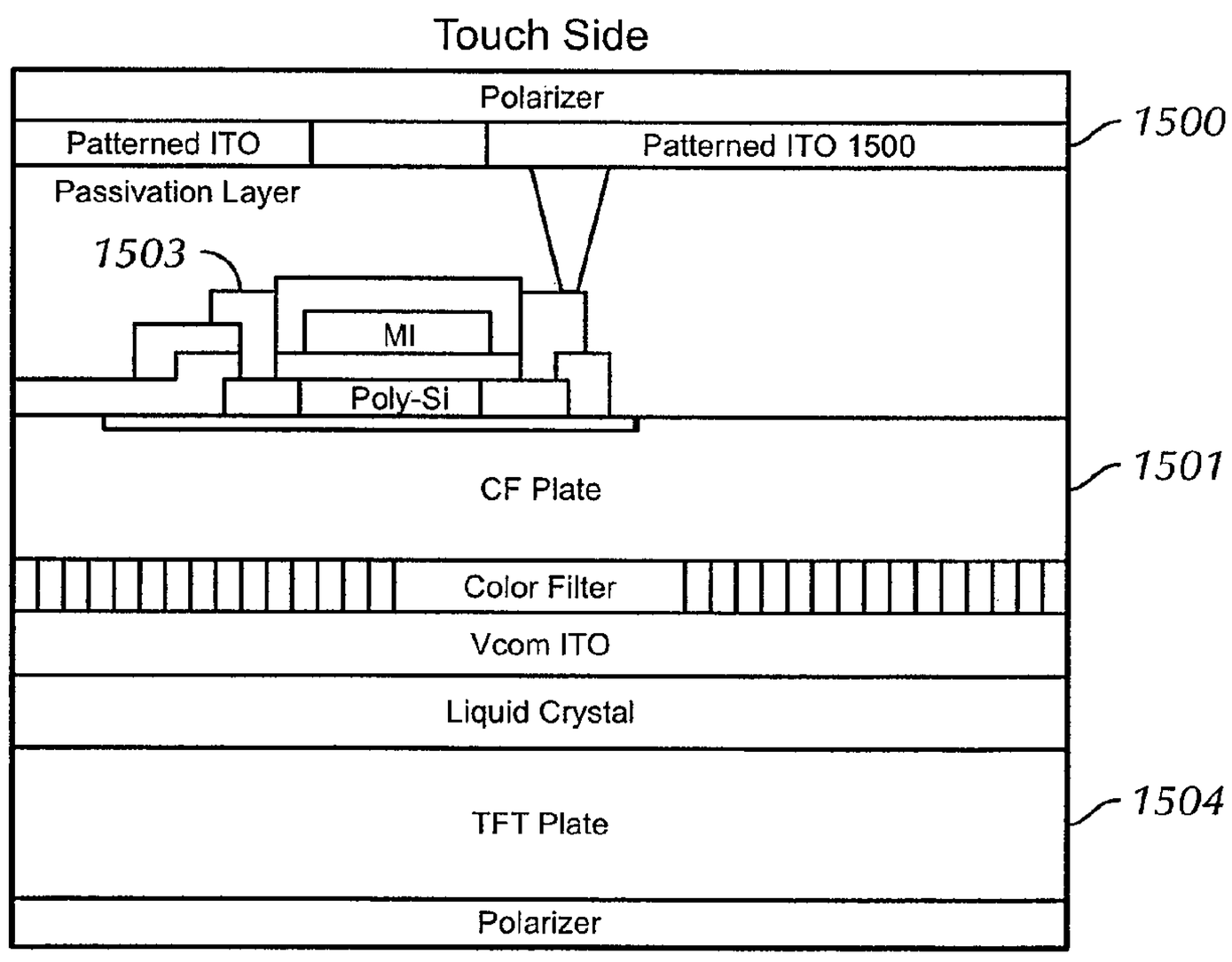
Touch Side
Polarizer
Patterned ITO
Patterned ITO 1500
1500
Passivation Layer
1503
MI
Poly-Si
CF Plate
1501
Color Filter
Vcom ITO
Liquid Crystal
TFT Plate
1504
Polarizer

FIG. 15

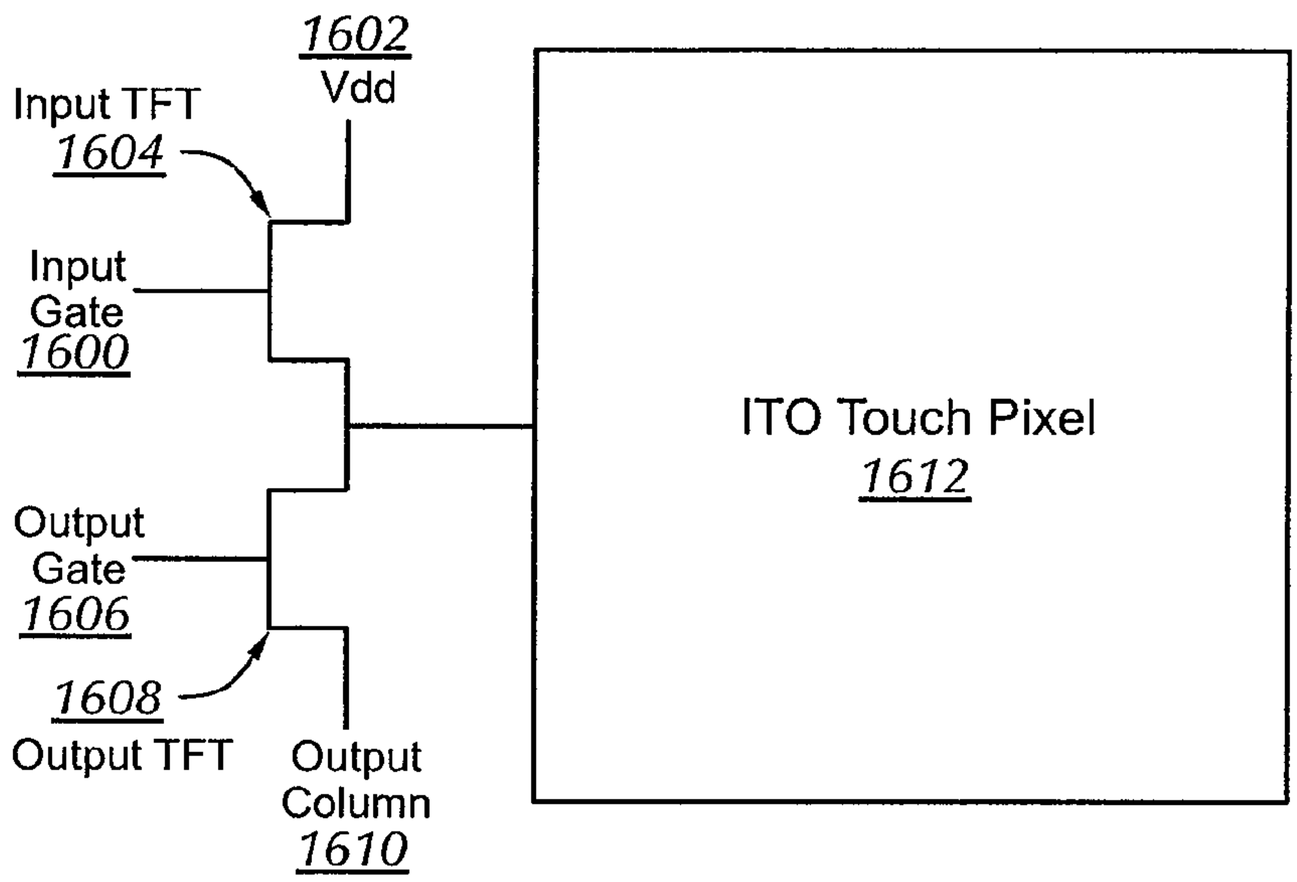
1602
Vdd
Input TFT
1604
Input
Gate
1600
ITO Touch Pixel
1612
Output
Gate
1606
1608
Output TFT
Output
Column
1610

FIG. 16

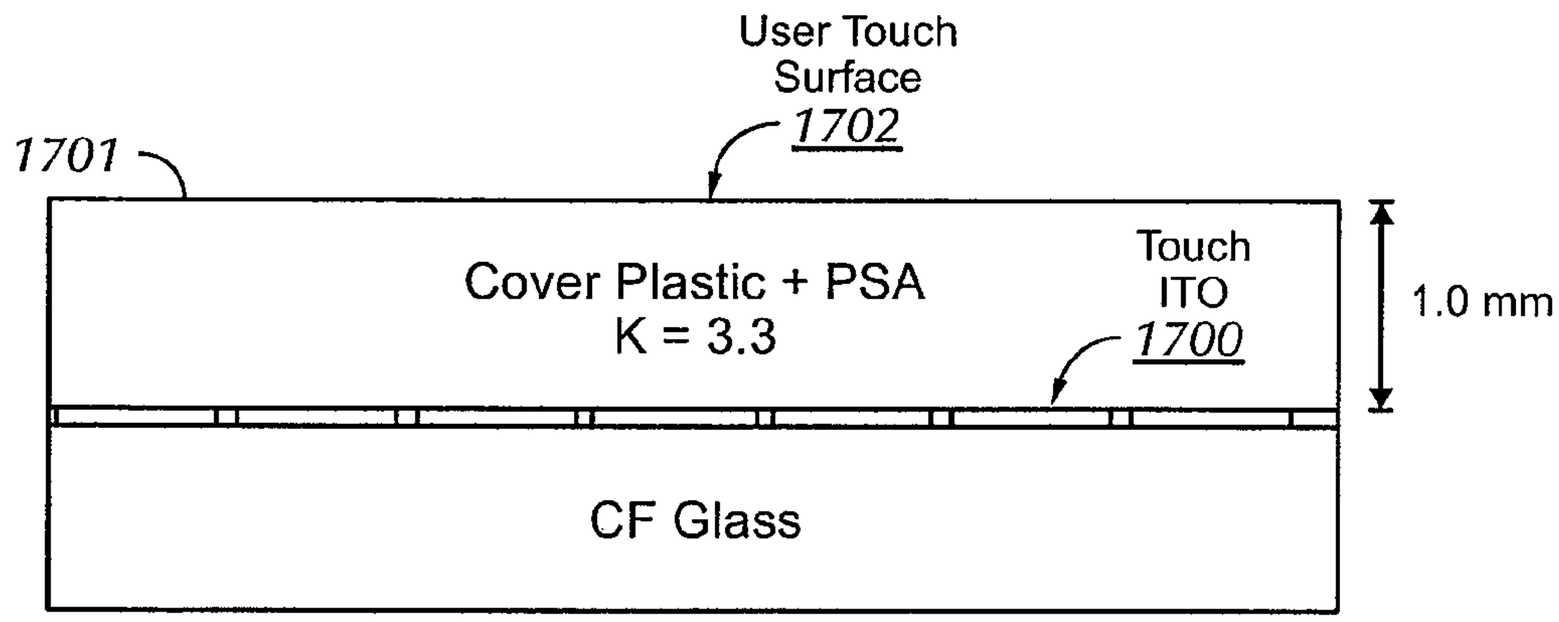
User Touch
Surface
1702
1701
Cover Plastic + PSA
K = 3.3
Touch
ITO
1700
1.0 mm
CF Glass

FIG. 17

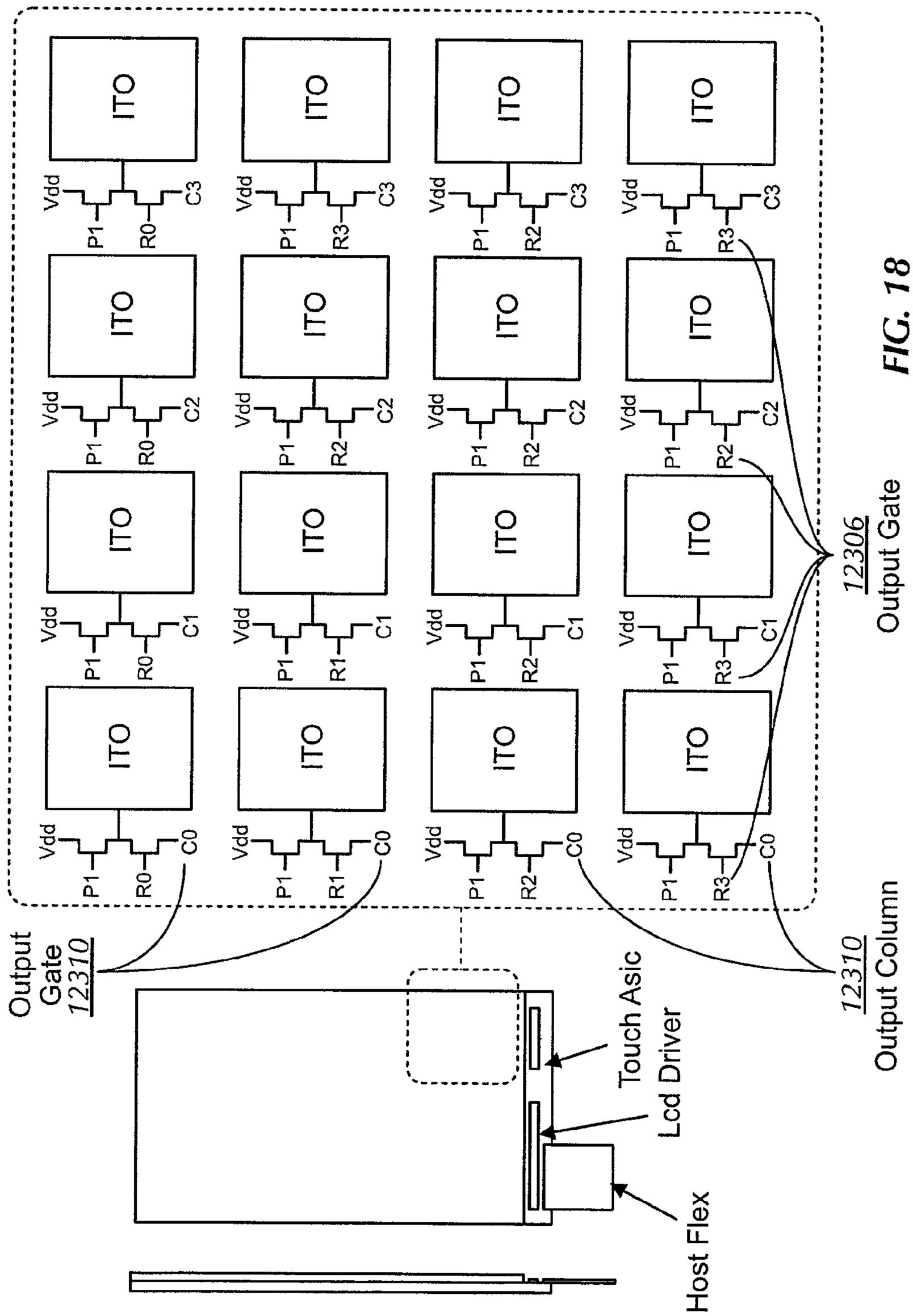
ITO
Vdd
P1
R0
R1
R2
R3
C0
C1
C2
C3
Output Gate 12310
12306 Output Gate
12310 Output Column
Touch Asic
Lcd Driver
Host Flex

FIG. 18

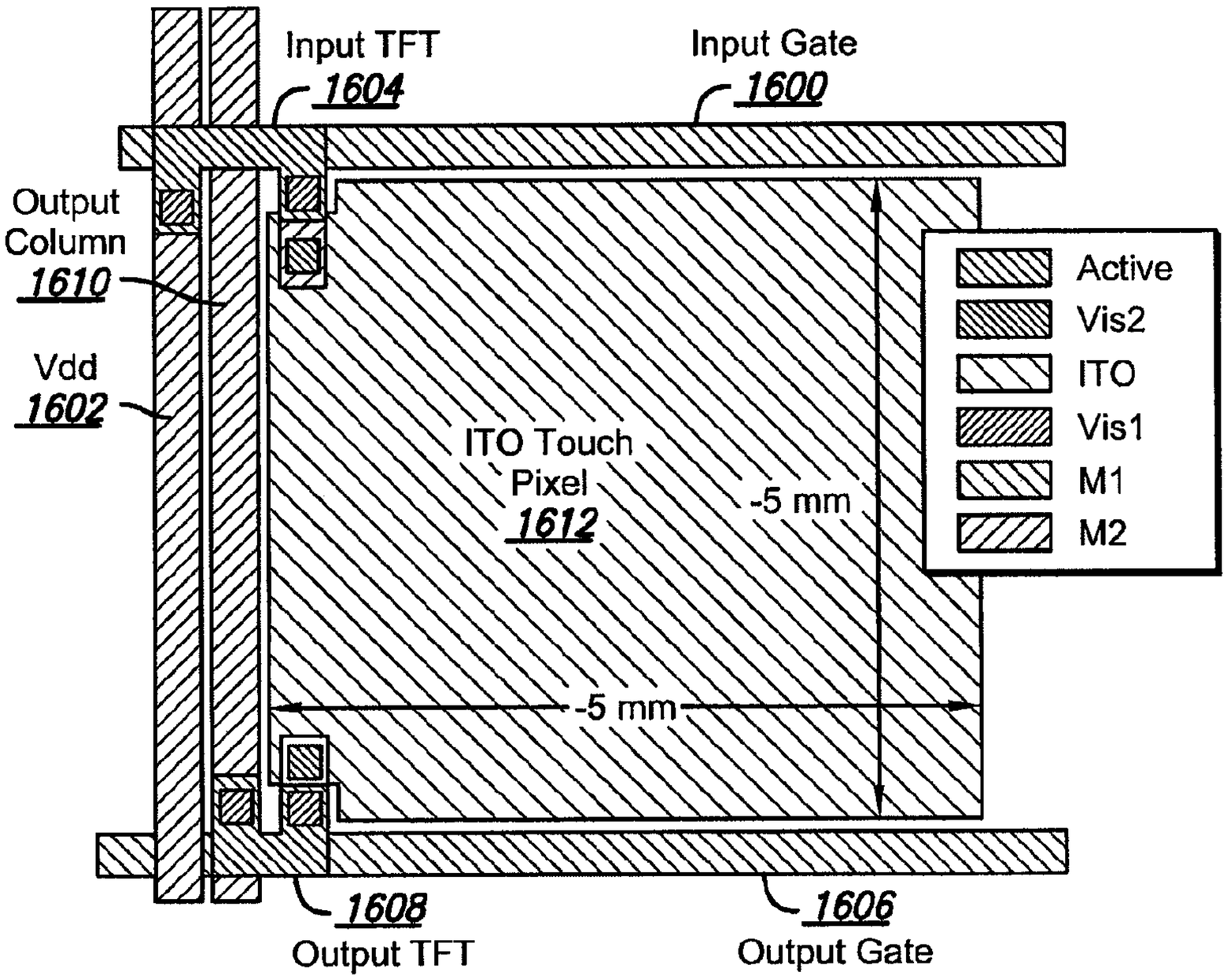
Input TFT
1604
Input Gate
1600
Output Column
1610
Vdd
1602
ITO Touch Pixel
1612
-5 mm
-5 mm
Active
Vis2
ITO
Vis1
M1
M2
1608
Output TFT
1606
Output Gate

FIG. 19

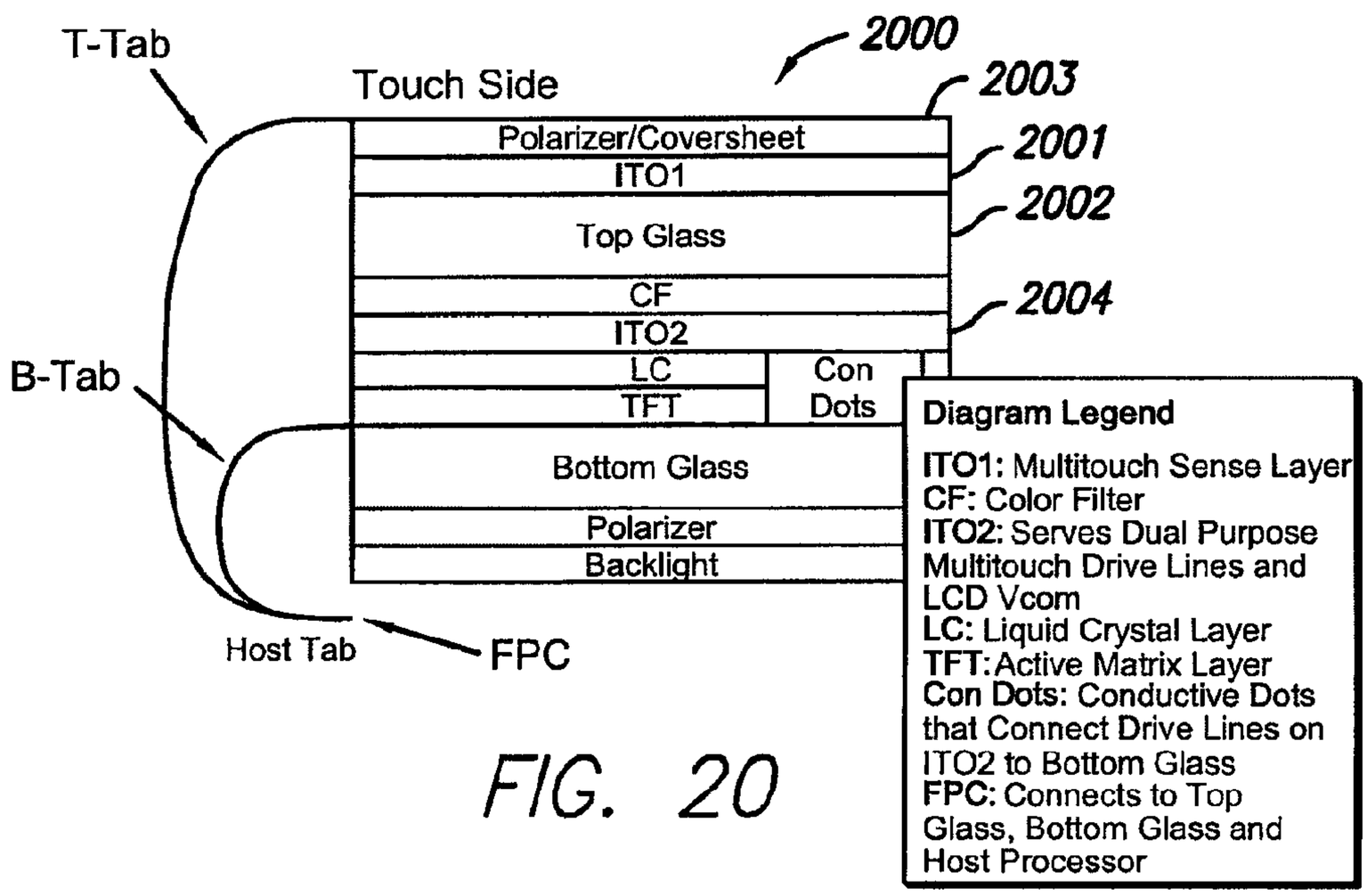
T-Tab
2000
Touch Side
2003
Polarizer/Coversheet
2001
ITO1
2002
Top Glass
CF
2004
ITO2
LC
Con Dots
TFT
B-Tab
Bottom Glass
Polarizer
Backlight
Host Tab
FPC
Diagram Legend
ITO1: Multitouch Sense Layer
CF: Color Filter
ITO2: Serves Dual Purpose Multitouch Drive Lines and LCD Vcom
LC: Liquid Crystal Layer
TFT: Active Matrix Layer
Con Dots: Conductive Dots that Connect Drive Lines on ITO2 to Bottom Glass
FPC: Connects to Top Glass, Bottom Glass and Host Processor

FIG. 20

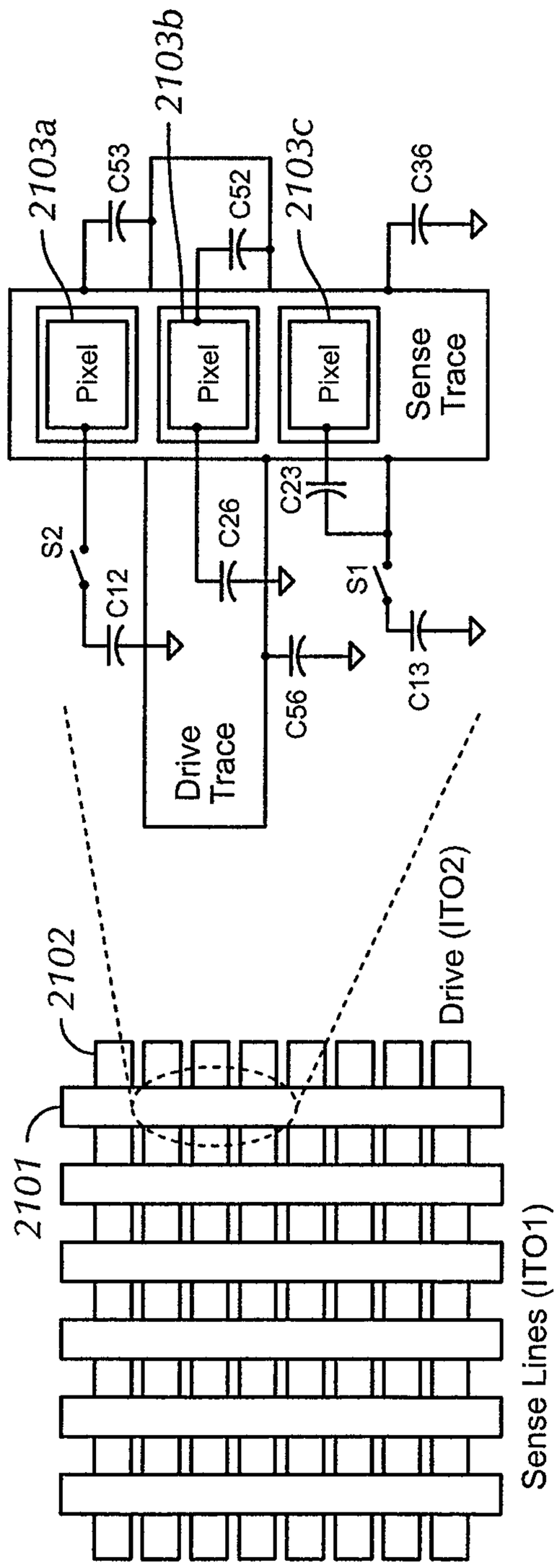
2103a
2103b
2103c
C53
C52
C36
Pixel
Pixel
Pixel
Sense Trace
C23
C26
S2
S1
C12
C13
C56
Drive Trace
2102
2101
Drive (ITO2)
Sense Lines (ITO1)

FIG. 21

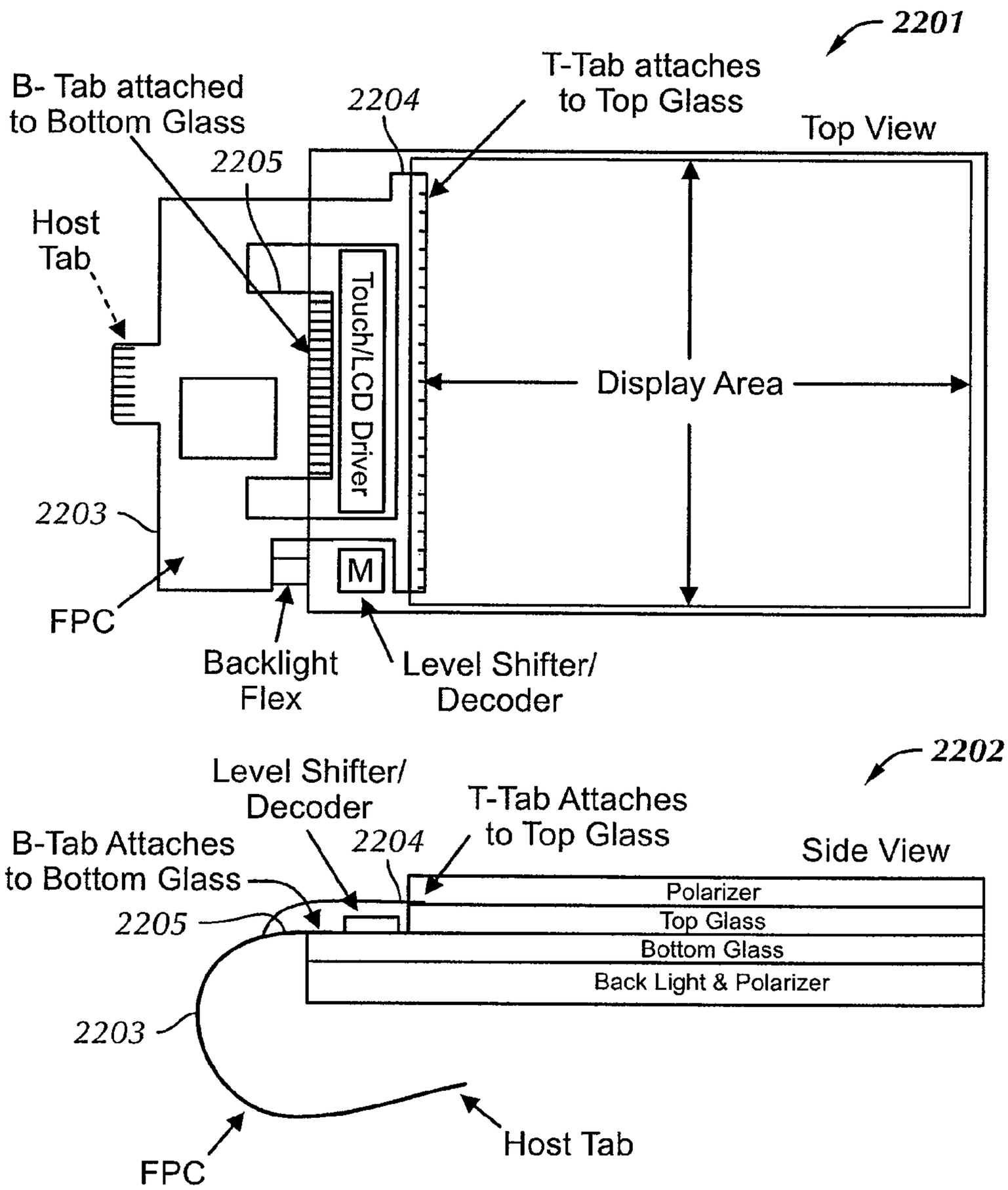
2201
Top View
B- Tab attached
to Bottom Glass
2204
T-Tab attaches
to Top Glass
2205
Host
Tab
Touch/LCD Driver
Display Area
2203
M
FPC
Backlight
Flex
Level Shifter/
Decoder
2202
Side View
Level Shifter/
Decoder
T-Tab Attaches
to Top Glass
B-Tab Attaches
to Bottom Glass
2204
2205
Polarizer
Top Glass
Bottom Glass
Back Light & Polarizer
2203
FPC
Host Tab

FIG. 22

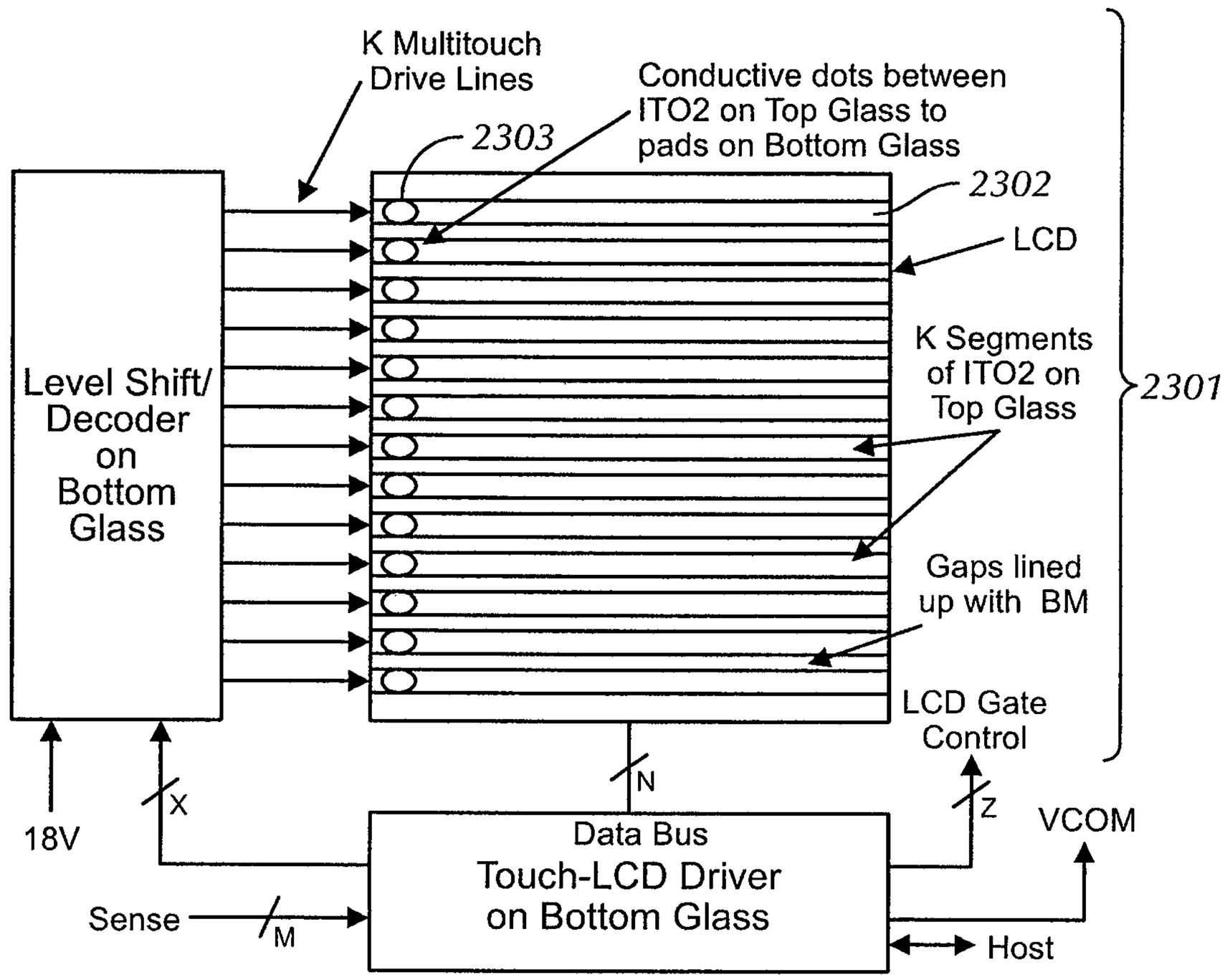
K Multitouch Drive Lines
Conductive dots between ITO2 on Top Glass to pads on Bottom Glass
2303
2302
LCD
K Segments of ITO2 on Top Glass
2301
Level Shift/ Decoder on Bottom Glass
Gaps lined up with BM
LCD Gate Control
N
X
Z
18V
VCOM
Data Bus
Touch-LCD Driver on Bottom Glass
Sense
M
Host

FIG. 23

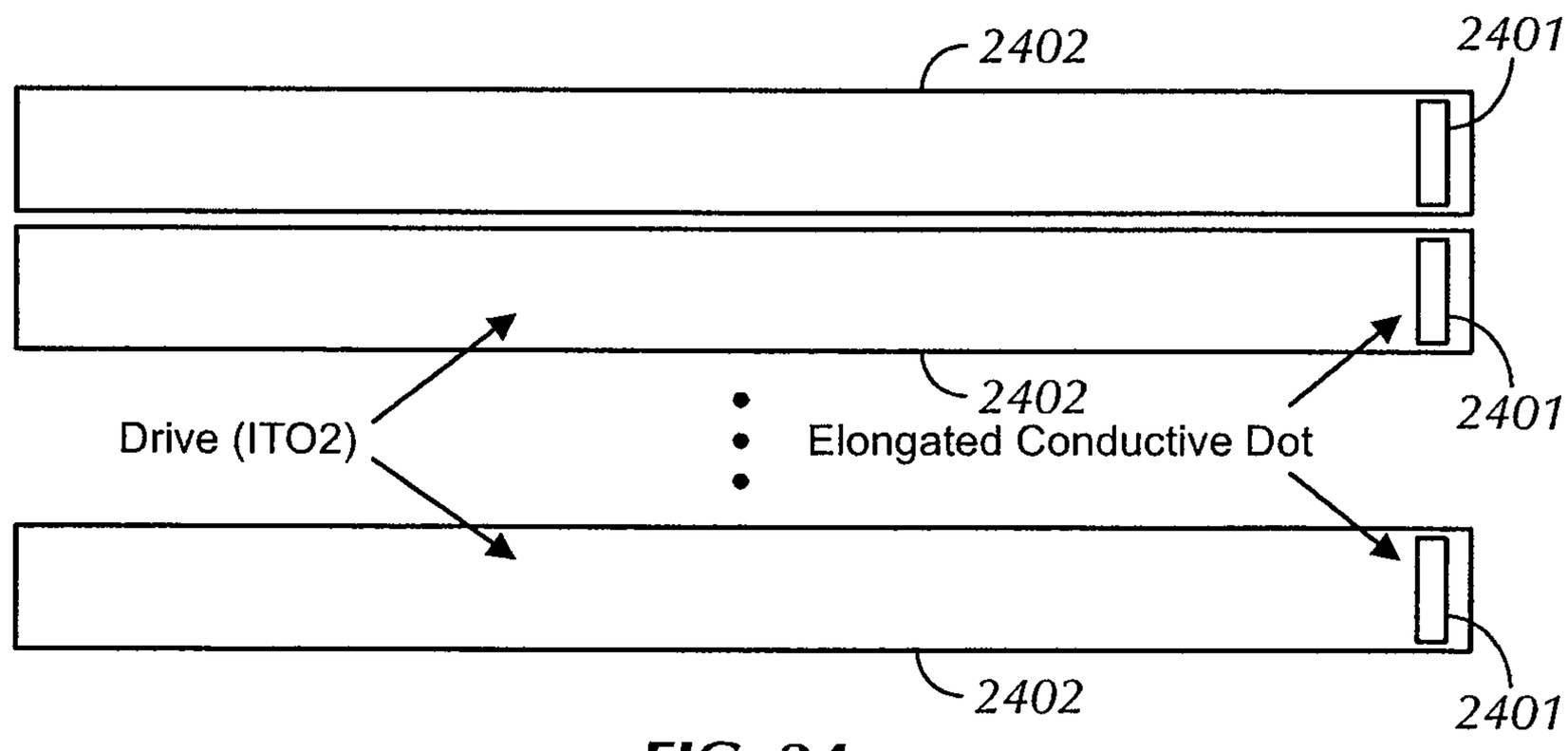
2402
2401
Drive (ITO2)
2402
Elongated Conductive Dot
2401
2402
2401

FIG. 24

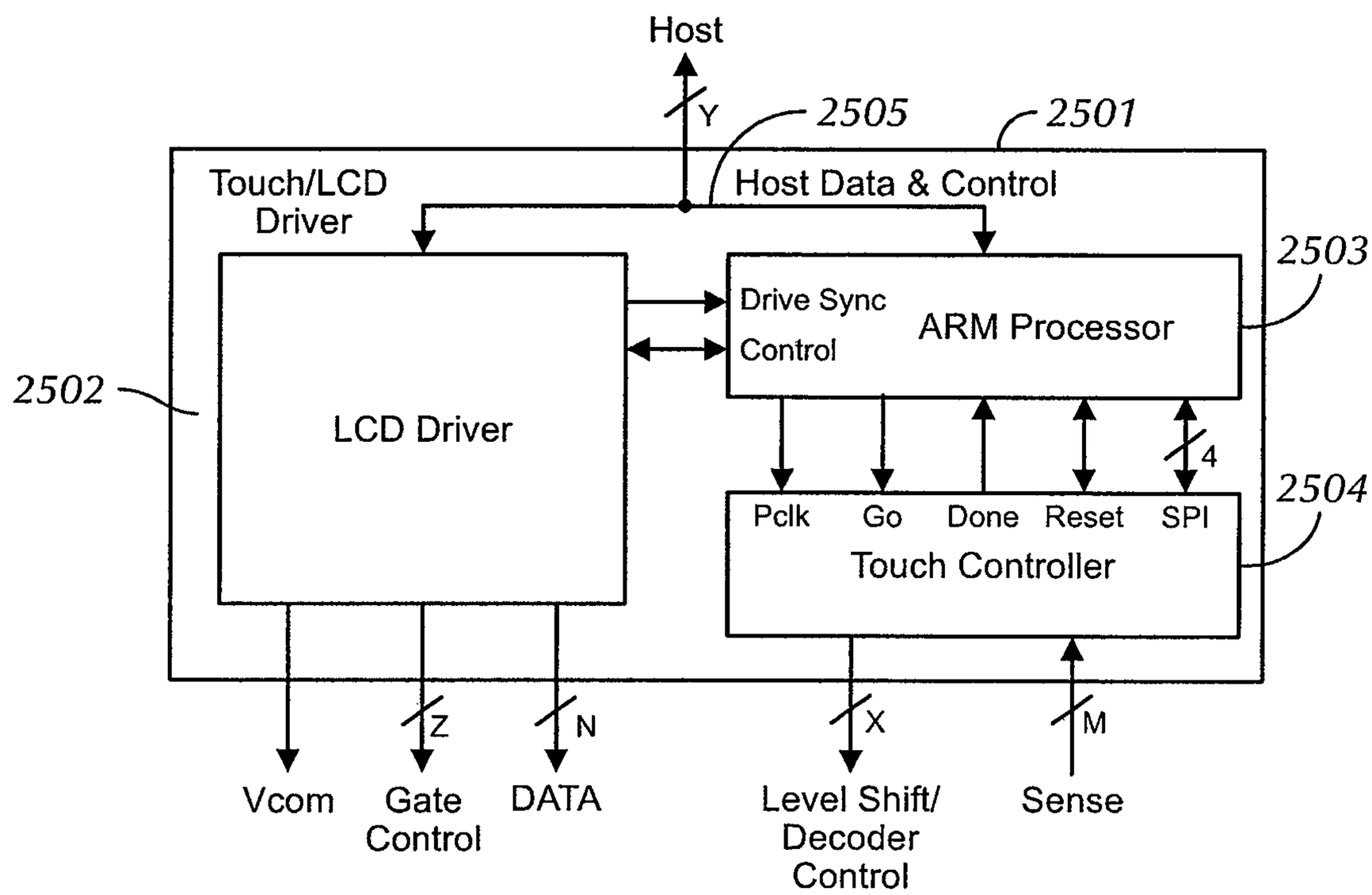
Host
Y
2505
2501
Touch/LCD Driver
Host Data & Control
2503
Drive Sync
Control
ARM Processor
2502
LCD Driver
4
2504
Pclk
Go
Done
Reset
SPI
Touch Controller
Z
N
X
M
Vcom
Gate Control
DATA
Level Shift/ Decoder Control
Sense

FIG. 25

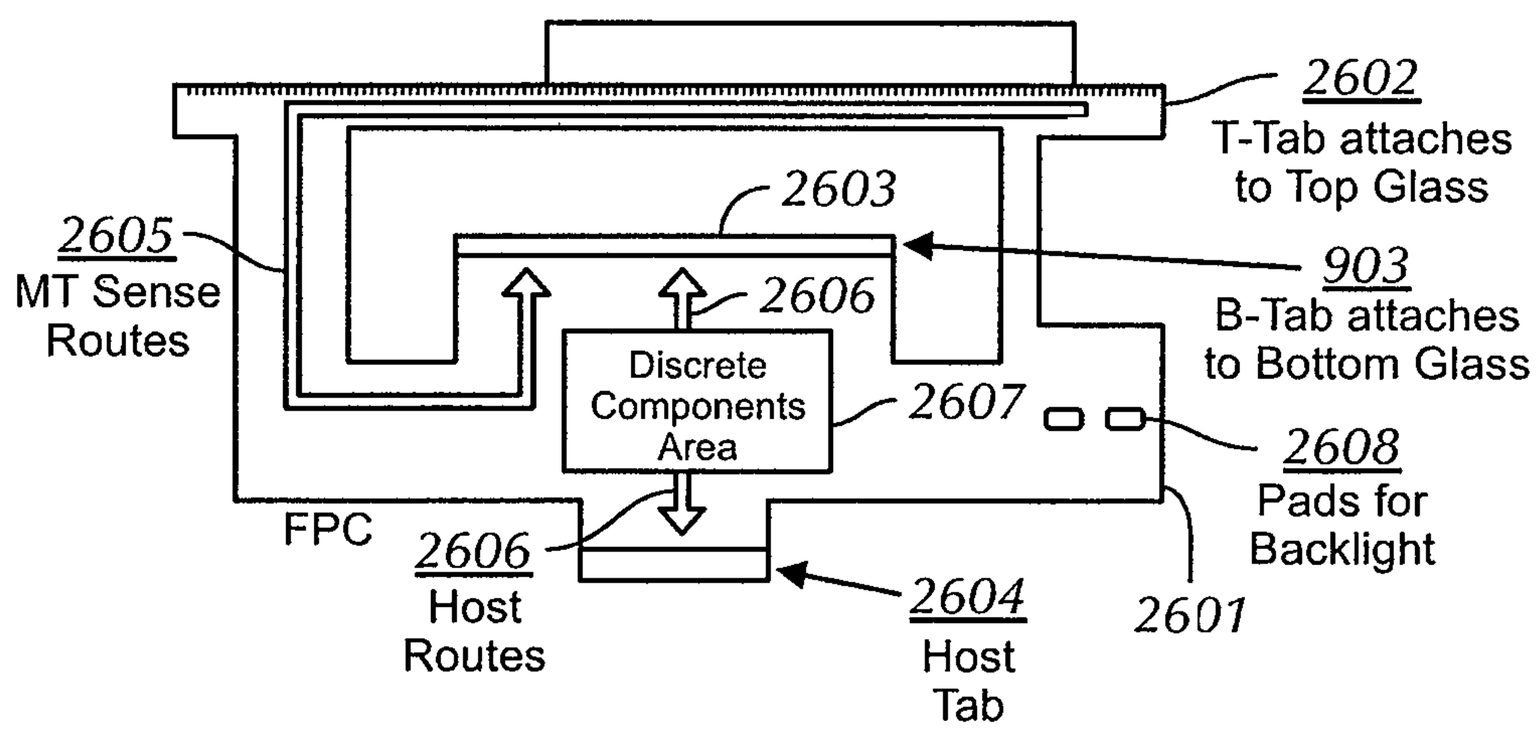
2602
T-Tab attaches to Top Glass
2603
2605
MT Sense Routes
903
B-Tab attaches to Bottom Glass
2606
Discrete Components Area
2607
2608
Pads for Backlight
FPC
2606
Host Routes
2604
Host Tab
2601

FIG. 26

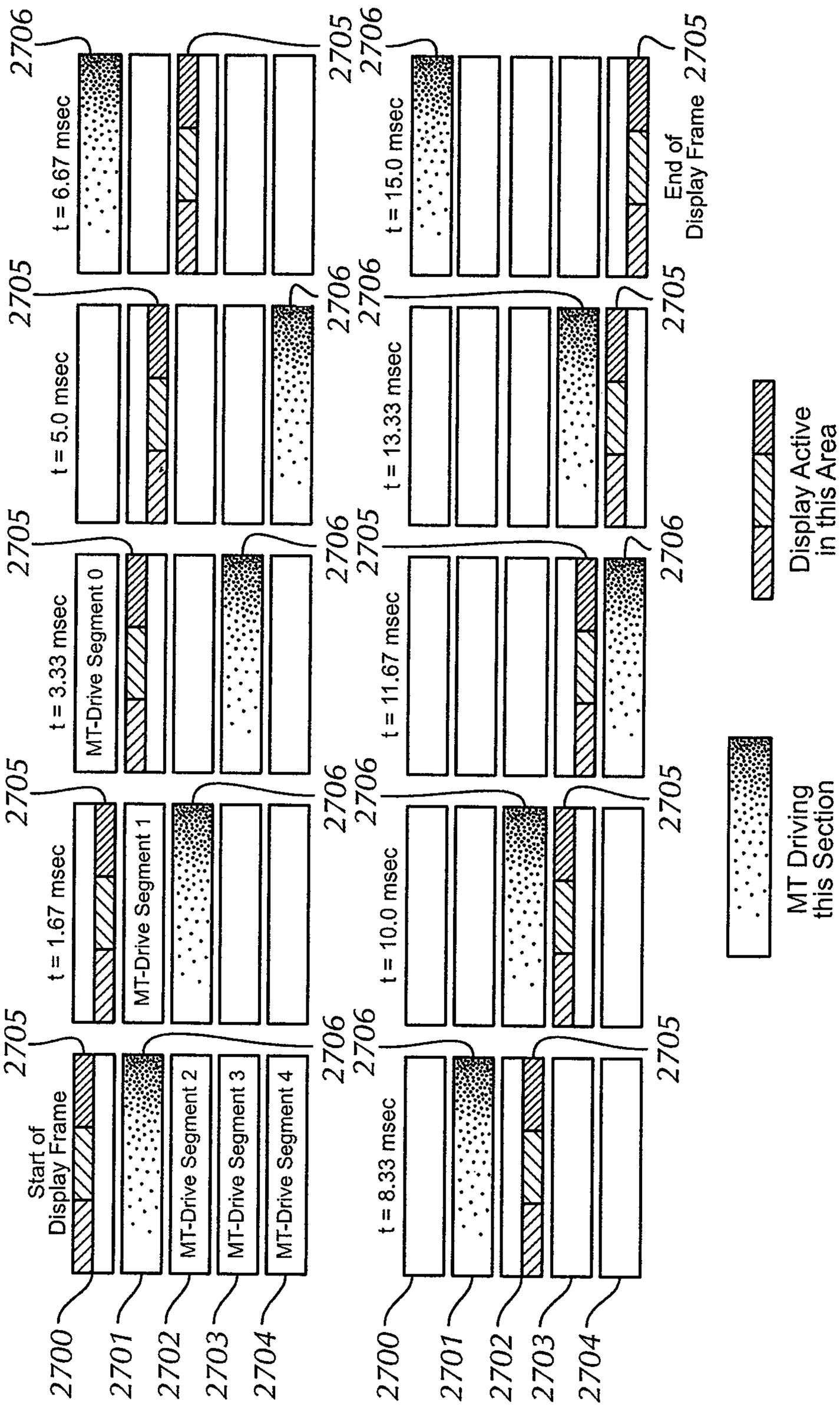
Start of Display Frame
MT-Drive Segment 1
MT-Drive Segment 2
MT-Drive Segment 3
MT-Drive Segment 4
MT-Drive Segment 0
End of Display Frame
t = 1.67 msec
t = 3.33 msec
t = 5.0 msec
t = 6.67 msec
t = 8.33 msec
t = 10.0 msec
t = 11.67 msec
t = 13.33 msec
t = 15.0 msec
2700
2701
2702
2703
2704
2705
2706
MT Driving this Section
Display Active in this Area

FIG. 27

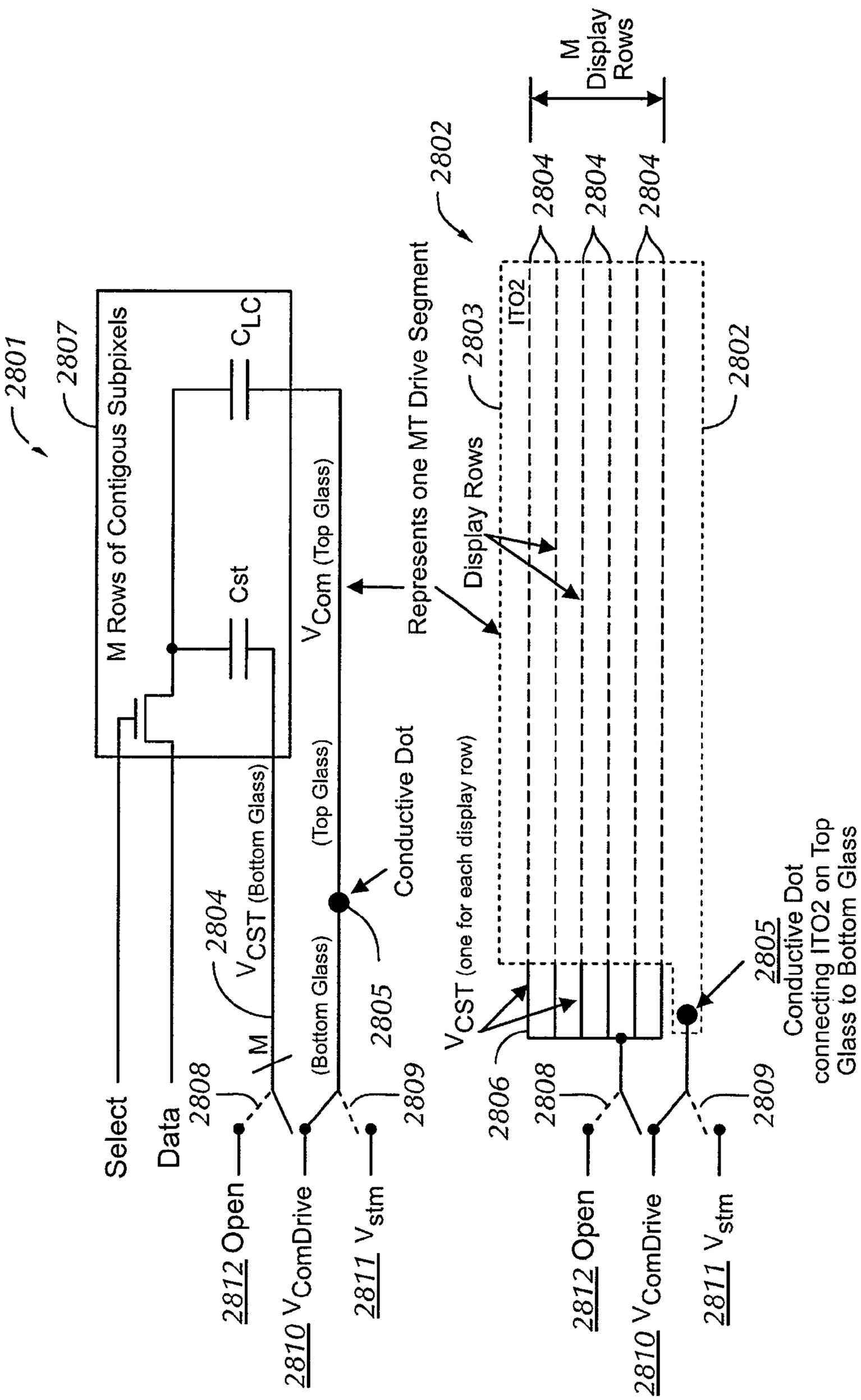
2801
2807
M Rows of Contigous Subpixels
C_{LC}
Cst
V_{Com} (Top Glass)
Represents one MT Drive Segment
2802
M Display Rows
2804
2804
2804
2803
ITO2
Display Rows
2802
Select
Data
2808
M
2804
V_{CST} (Bottom Glass)
(Top Glass)
Conductive Dot
(Bottom Glass)
2805
2809
2812 Open
2810 $V_{ComDrive}$
2811 V_{stm}
V_{CST} (one for each display row)
2806
2808
2809
2812 Open
2810 $V_{ComDrive}$
2811 V_{stm}
2805
Conductive Dot
connecting ITO2 on Top
Glass to Bottom Glass

FIG. 28

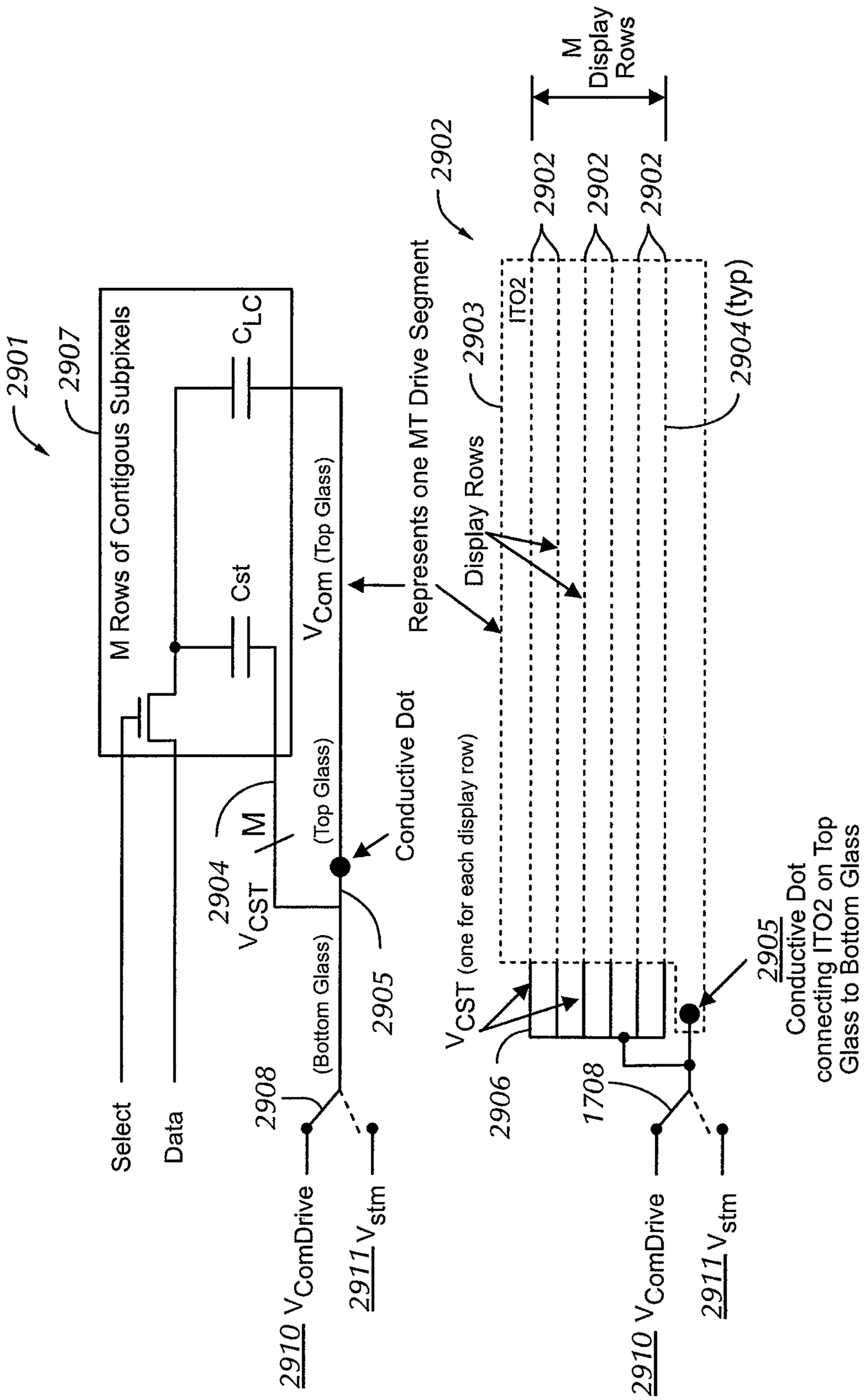
2901
2907
M Rows of Contigous Subpixels
C_{LC}
Cst
V_{Com} (Top Glass)
Select
Data
2904
M
V_{CST}
(Top Glass)
(Bottom Glass)
Conductive Dot
2905
2908
2910 $V_{ComDrive}$
2911 V_{stm}
Represents one MT Drive Segment
2902
2903
Display Rows
ITO2
2902
2902
2902
M Display Rows
2904 (typ)
V_{CST} (one for each display row)
2906
1708
2910 $V_{ComDrive}$
2911 V_{stm}
2905
Conductive Dot connecting ITO2 on Top Glass to Bottom Glass

FIG. 29

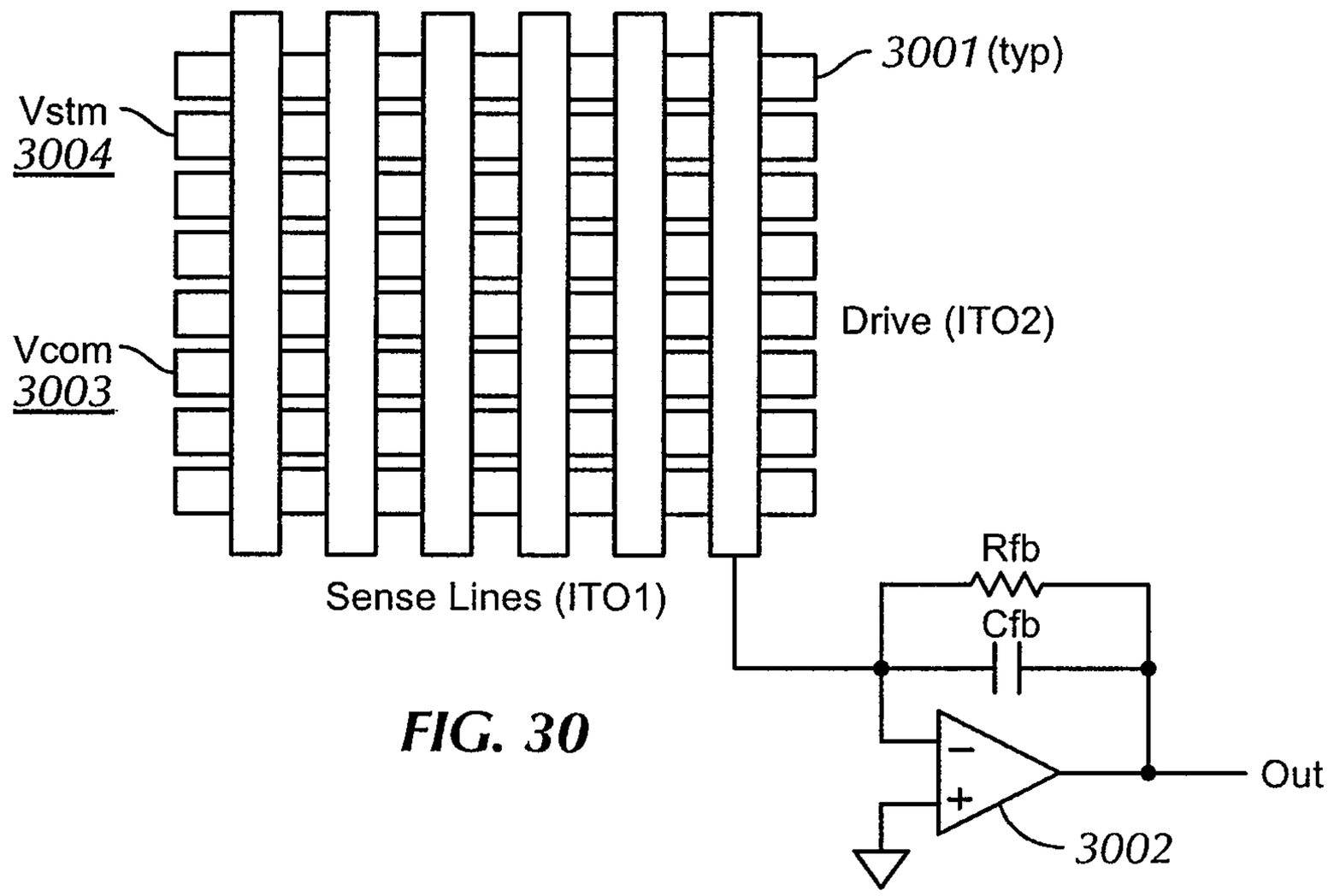
3001 (typ)
Vstm
3004
Vcom
3003
Drive (ITO2)
Sense Lines (ITO1)
Rfb
Cfb
Out
3002

FIG. 30

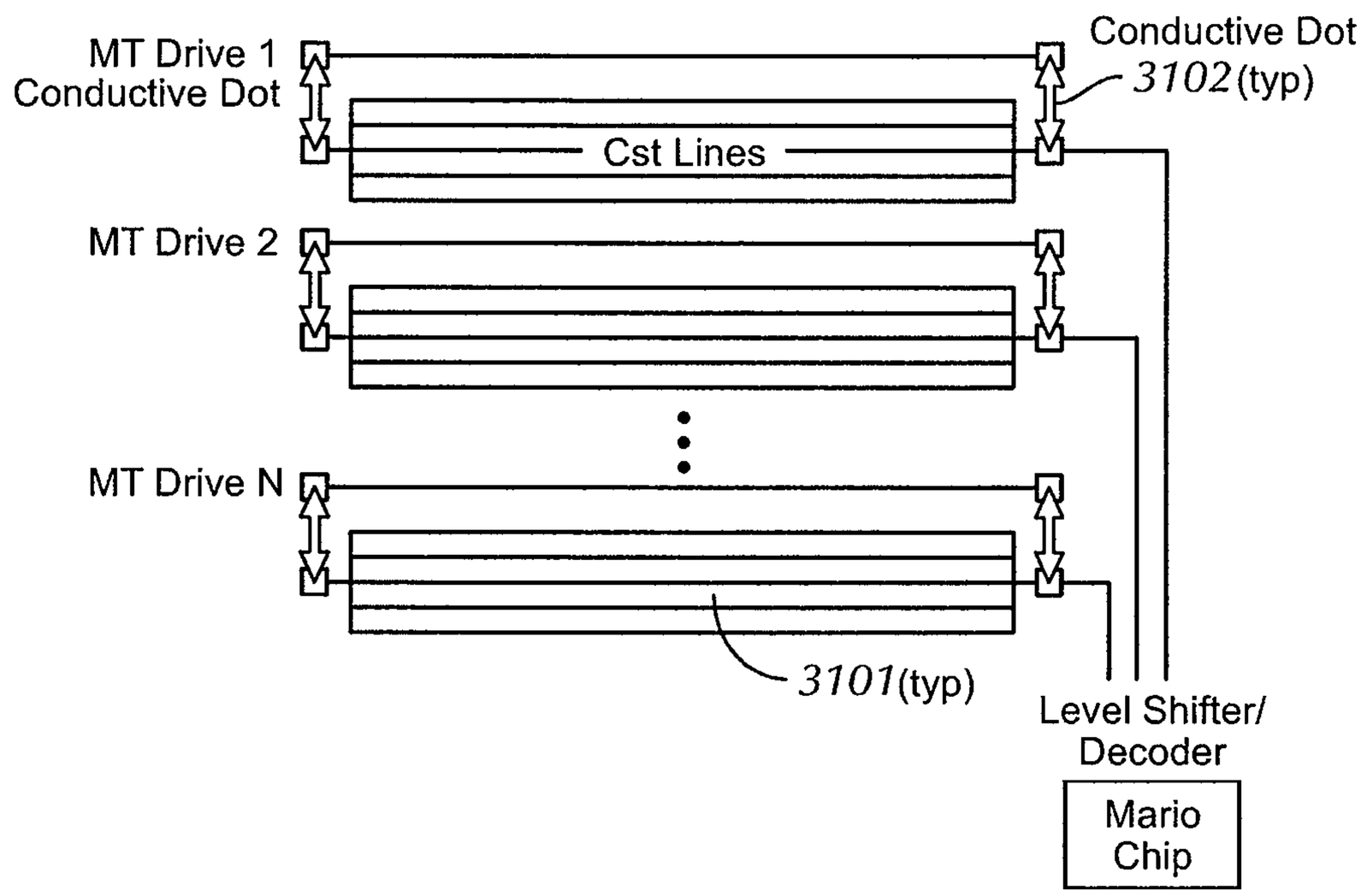
MT Drive 1
Conductive Dot
Conductive Dot
3102 (typ)
Cst Lines
MT Drive 2
MT Drive N
3101 (typ)
Level Shifter/
Decoder
Mario
Chip

FIG. 31

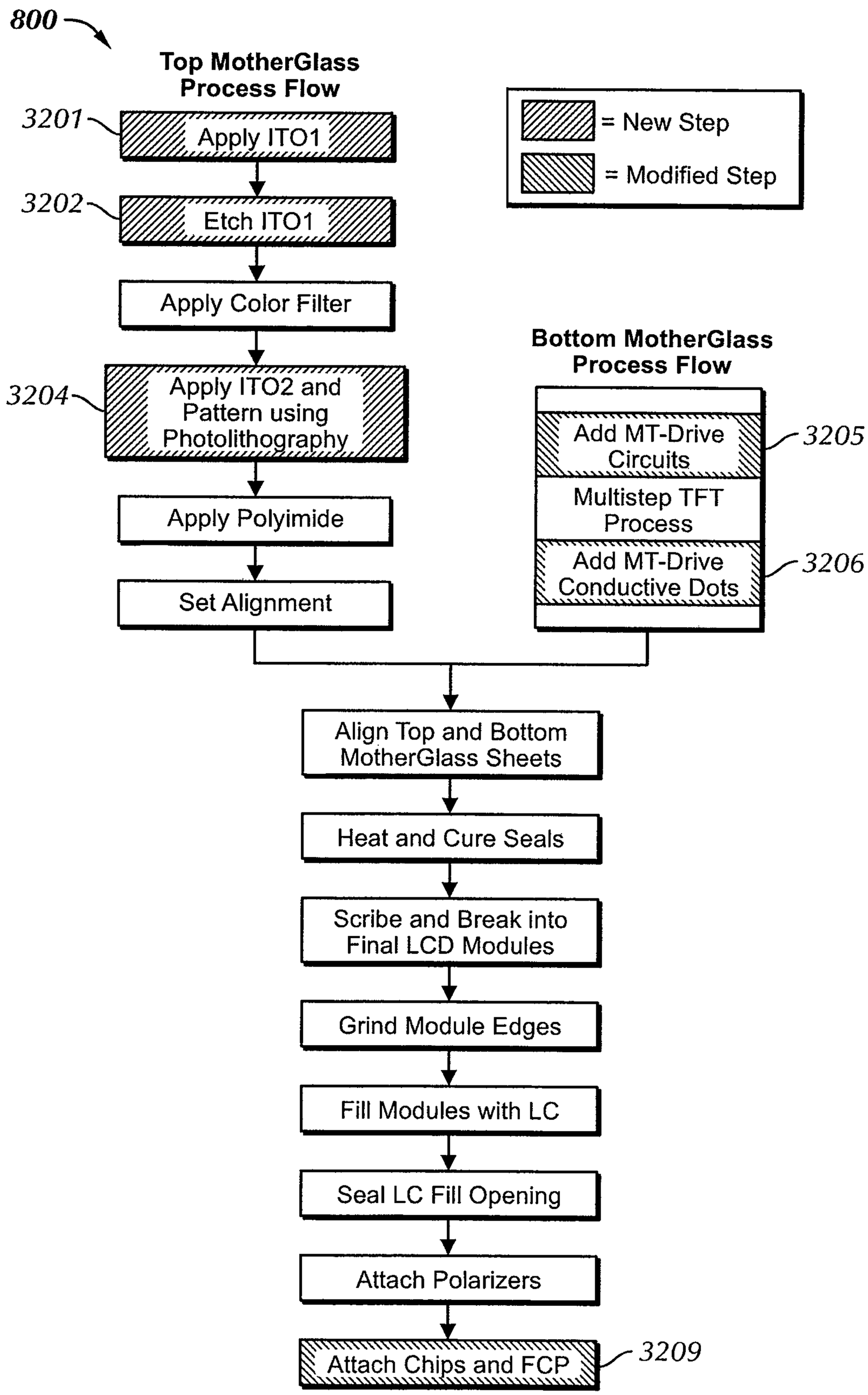
800
Top MotherGlass Process Flow
3201
Apply ITO1
3202
Etch ITO1
Apply Color Filter
3204
Apply ITO2 and Pattern using Photolithography
Apply Polyimide
Set Alignment
= New Step
= Modified Step
Bottom MotherGlass Process Flow
Add MT-Drive Circuits
3205
Multistep TFT Process
Add MT-Drive Conductive Dots
3206
Align Top and Bottom MotherGlass Sheets
Heat and Cure Seals
Scribe and Break into Final LCD Modules
Grind Module Edges
Fill Modules with LC
Seal LC Fill Opening
Attach Polarizers
Attach Chips and FCP
3209

FIG. 32

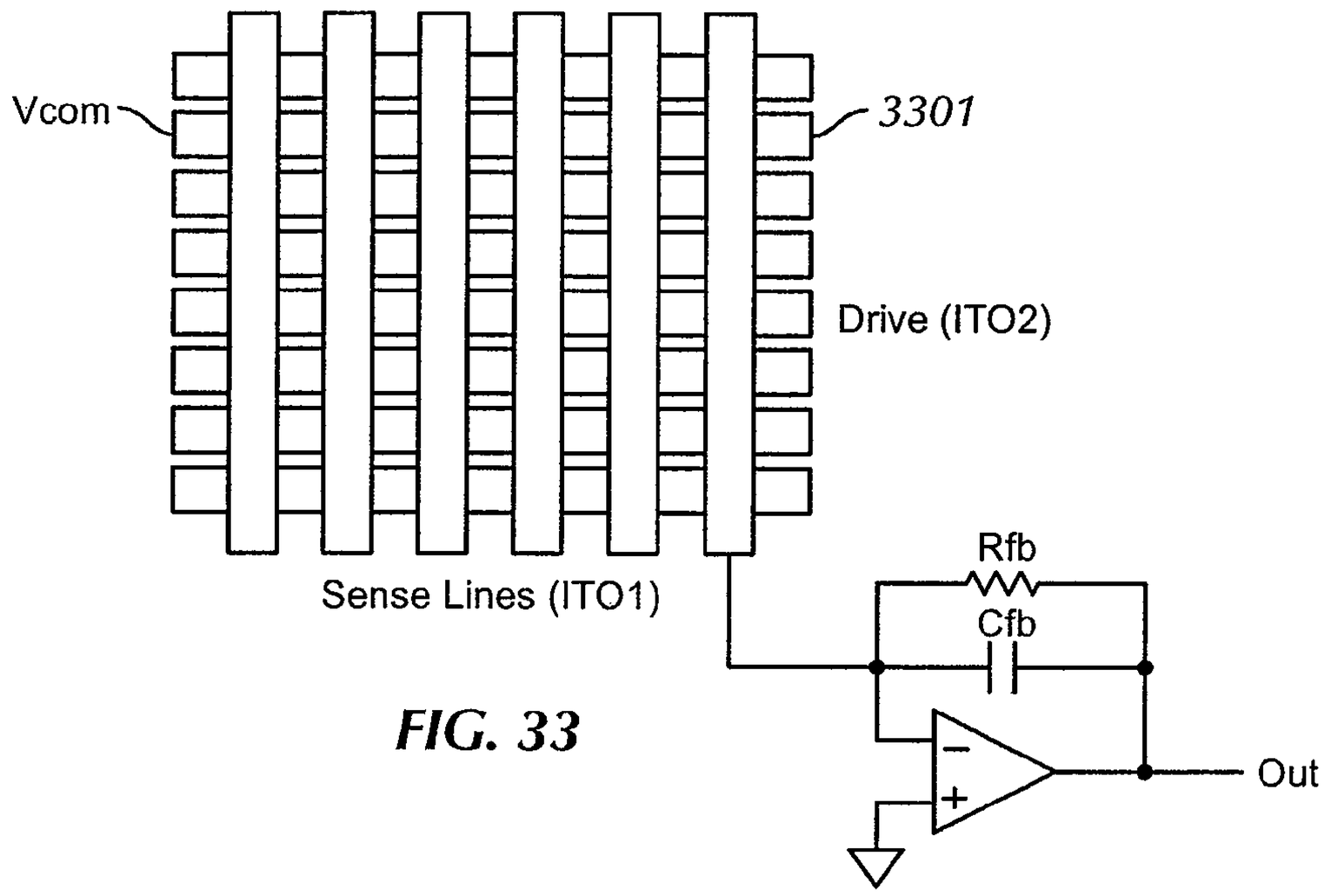
Vcom
3301
Drive (ITO2)
Sense Lines (ITO1)
Rfb
Cfb
Out

FIG. 33

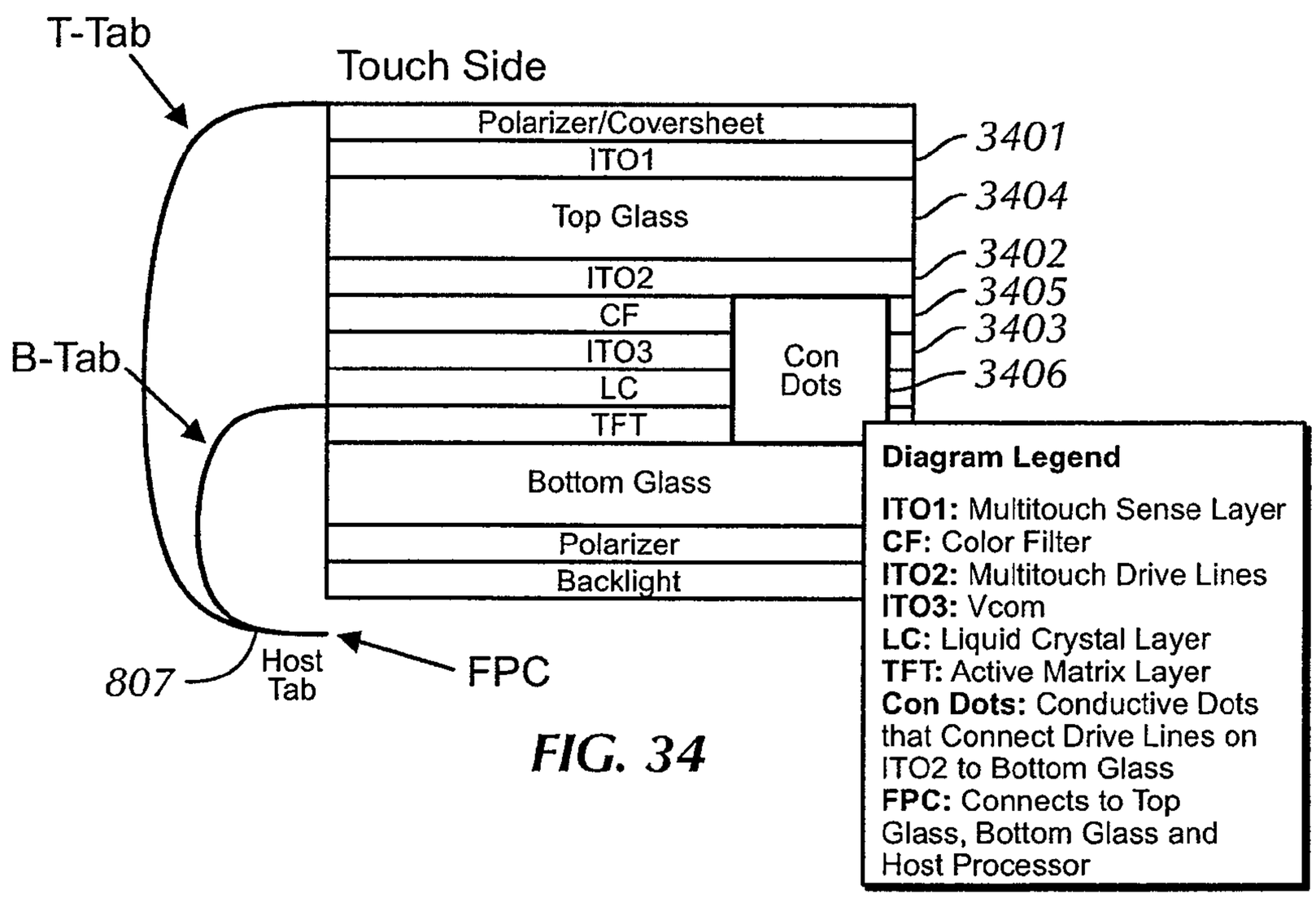
T-Tab
Touch Side
Polarizer/Coversheet
ITO1
Top Glass
ITO2
CF
ITO3
LC
TFT
Con Dots
Bottom Glass
Polarizer
Backlight
3401
3404
3402
3405
3403
3406
B-Tab
807
Host Tab
FPC
Diagram Legend
ITO1: Multitouch Sense Layer
CF: Color Filter
ITO2: Multitouch Drive Lines
ITO3: Vcom
LC: Liquid Crystal Layer
TFT: Active Matrix Layer
Con Dots: Conductive Dots that Connect Drive Lines on ITO2 to Bottom Glass
FPC: Connects to Top Glass, Bottom Glass and Host Processor

FIG. 34

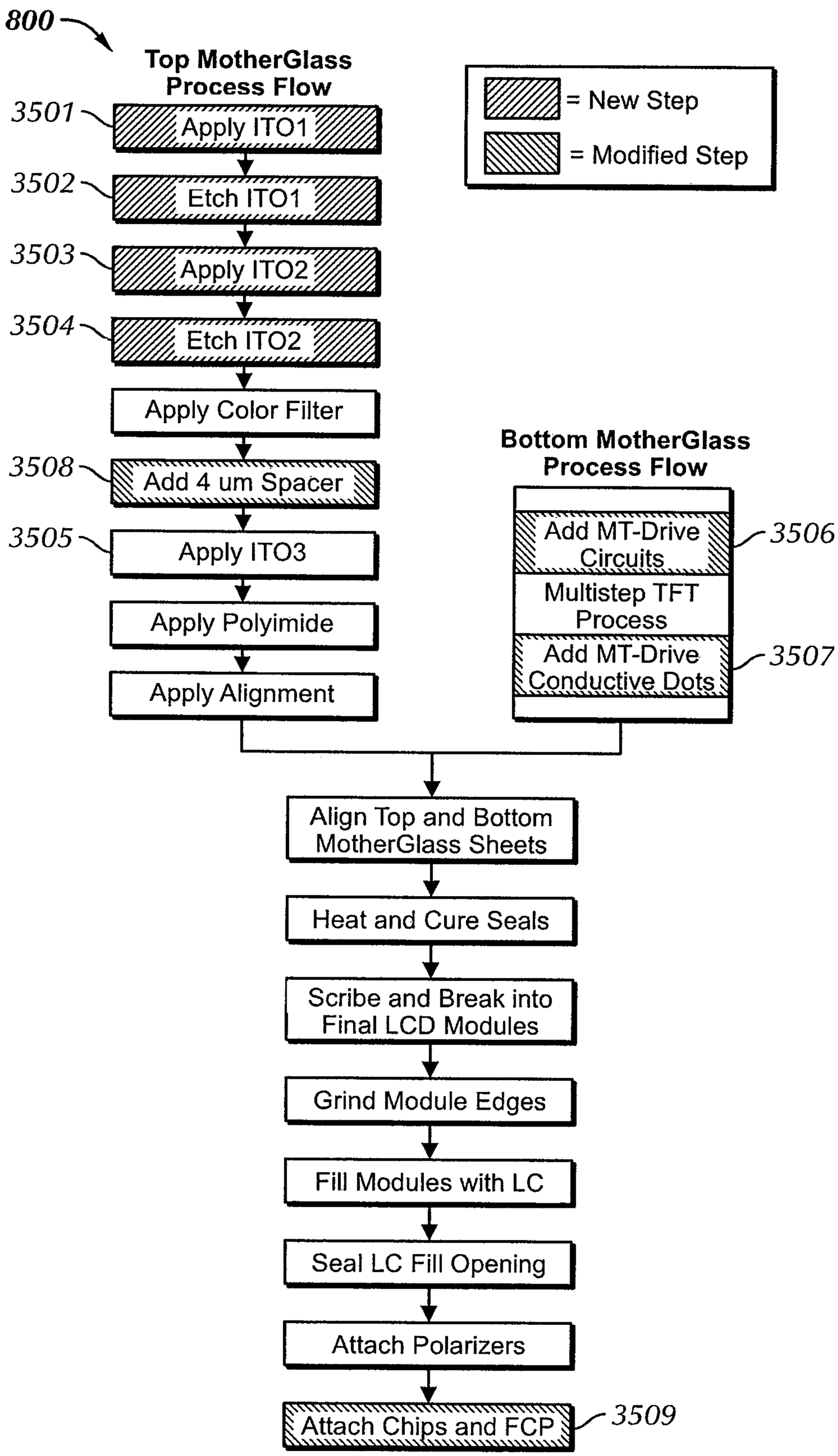
800
Top MotherGlass Process Flow
3501
Apply ITO1
3502
Etch ITO1
3503
Apply ITO2
3504
Etch ITO2
Apply Color Filter
3508
Add 4 um Spacer
3505
Apply ITO3
Apply Polyimide
Apply Alignment
= New Step
= Modified Step
Bottom MotherGlass Process Flow
Add MT-Drive Circuits
3506
Multistep TFT Process
Add MT-Drive Conductive Dots
3507
Align Top and Bottom MotherGlass Sheets
Heat and Cure Seals
Scribe and Break into Final LCD Modules
Grind Module Edges
Fill Modules with LC
Seal LC Fill Opening
Attach Polarizers
Attach Chips and FCP
3509

FIG. 35

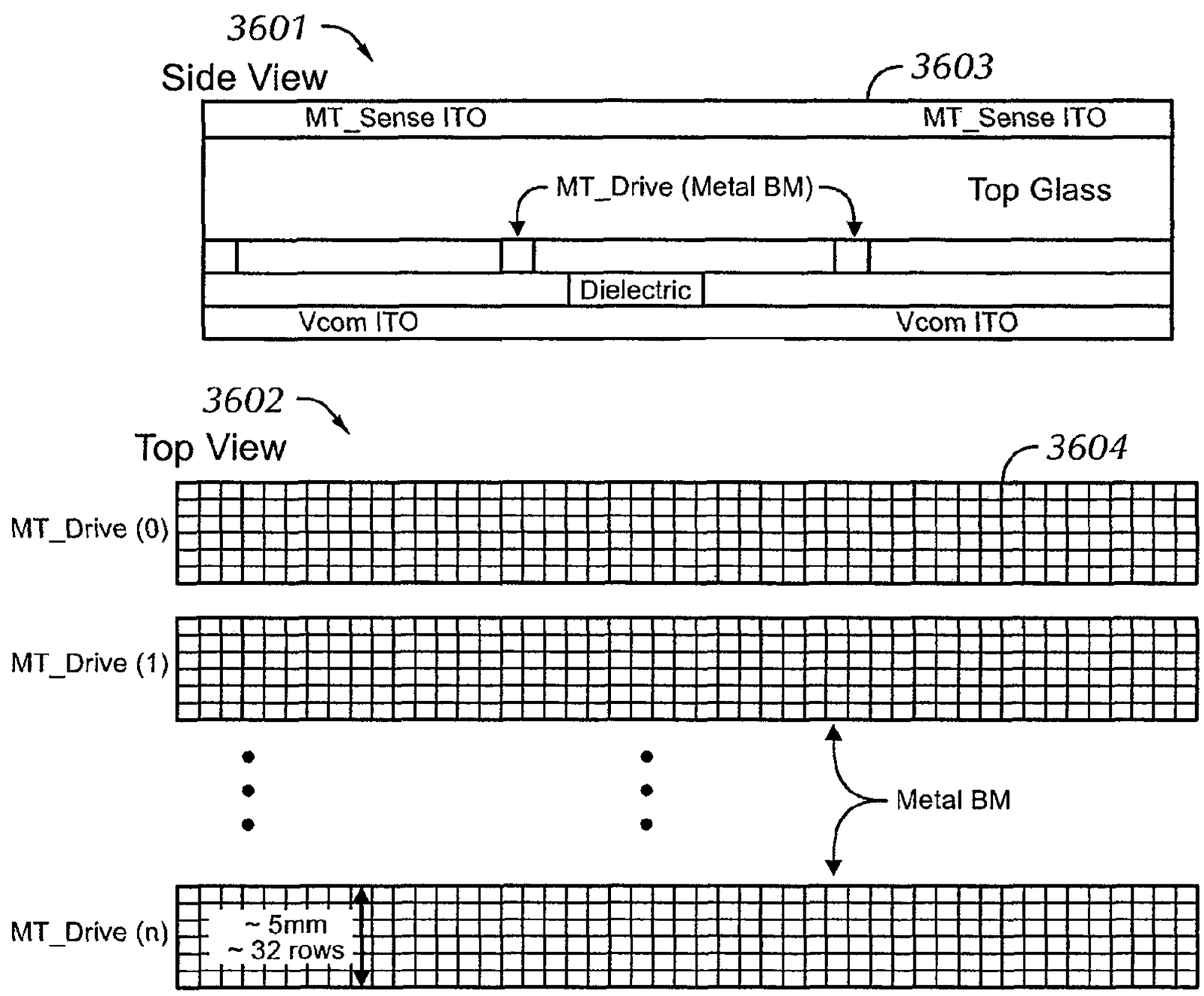
3601
Side View
3603
MT_Sense ITO
MT_Sense ITO
MT_Drive (Metal BM)
Top Glass
Dielectric
Vcom ITO
Vcom ITO
3602
Top View
3604
MT_Drive (0)
MT_Drive (1)
Metal BM
MT_Drive (n)
~ 5mm
~ 32 rows

FIG. 36

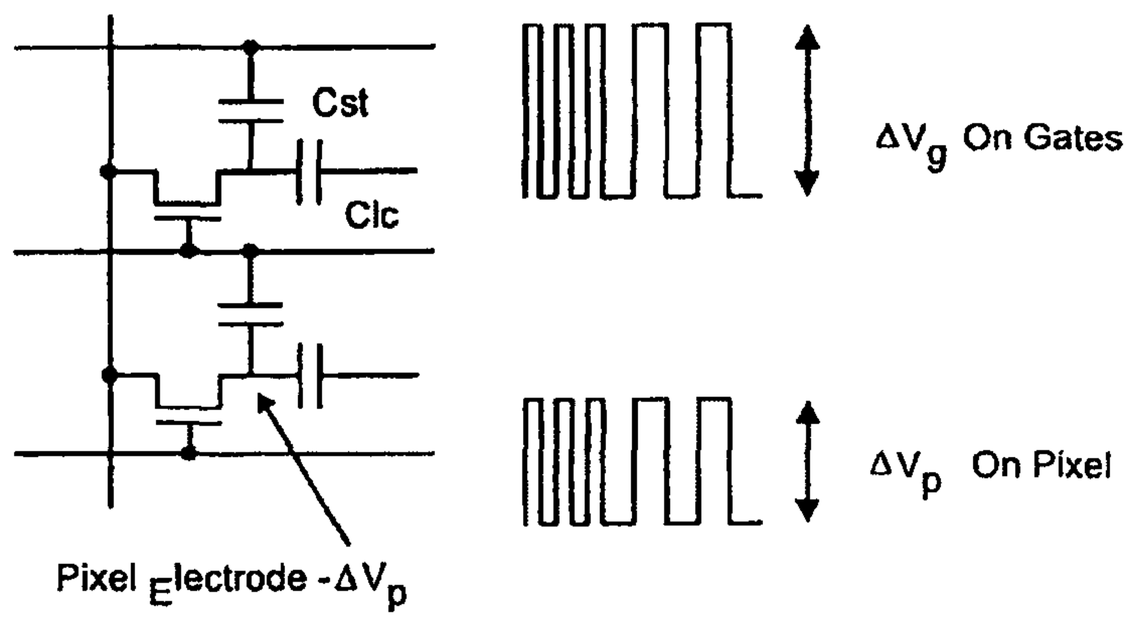
Cst
Clc
ΔVg On Gates
ΔVp On Pixel
Pixel Electrode -ΔVp

FIG. 37

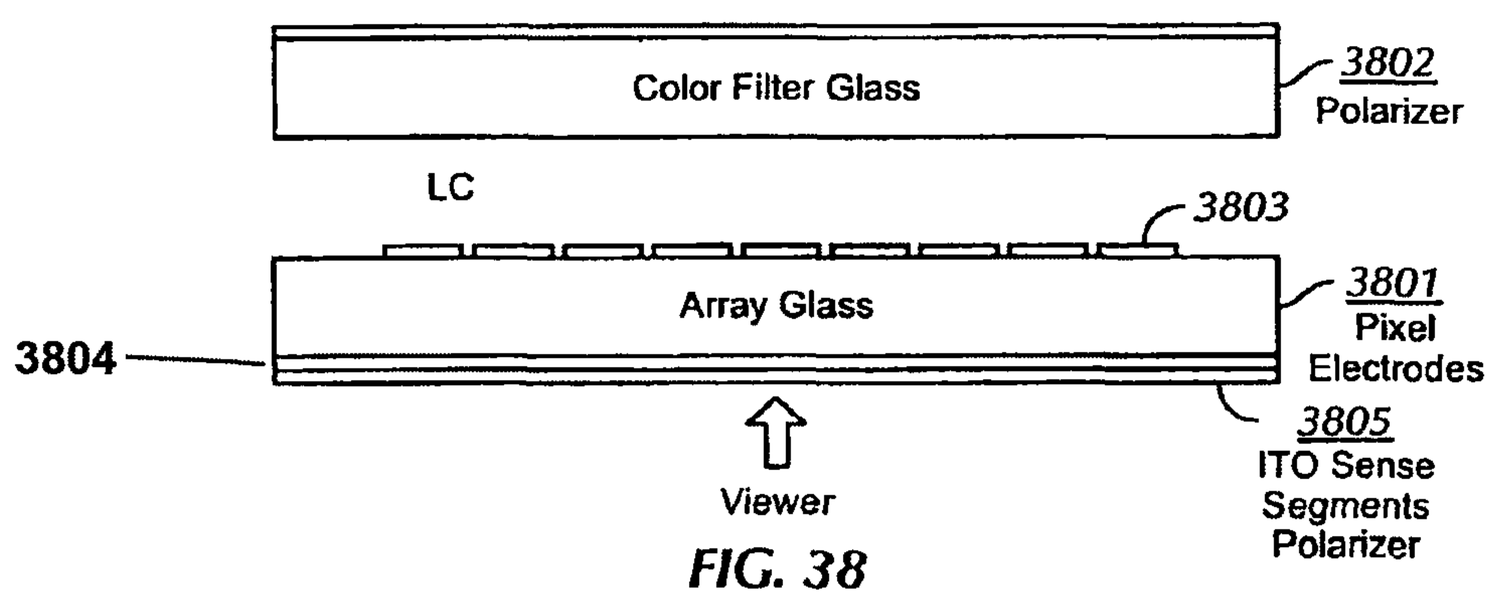
Color Filter Glass
3802
Polarizer
LC
3803
Array Glass
3801
Pixel
Electrodes
3804
3805
ITO Sense
Segments
Polarizer
Viewer

FIG. 38

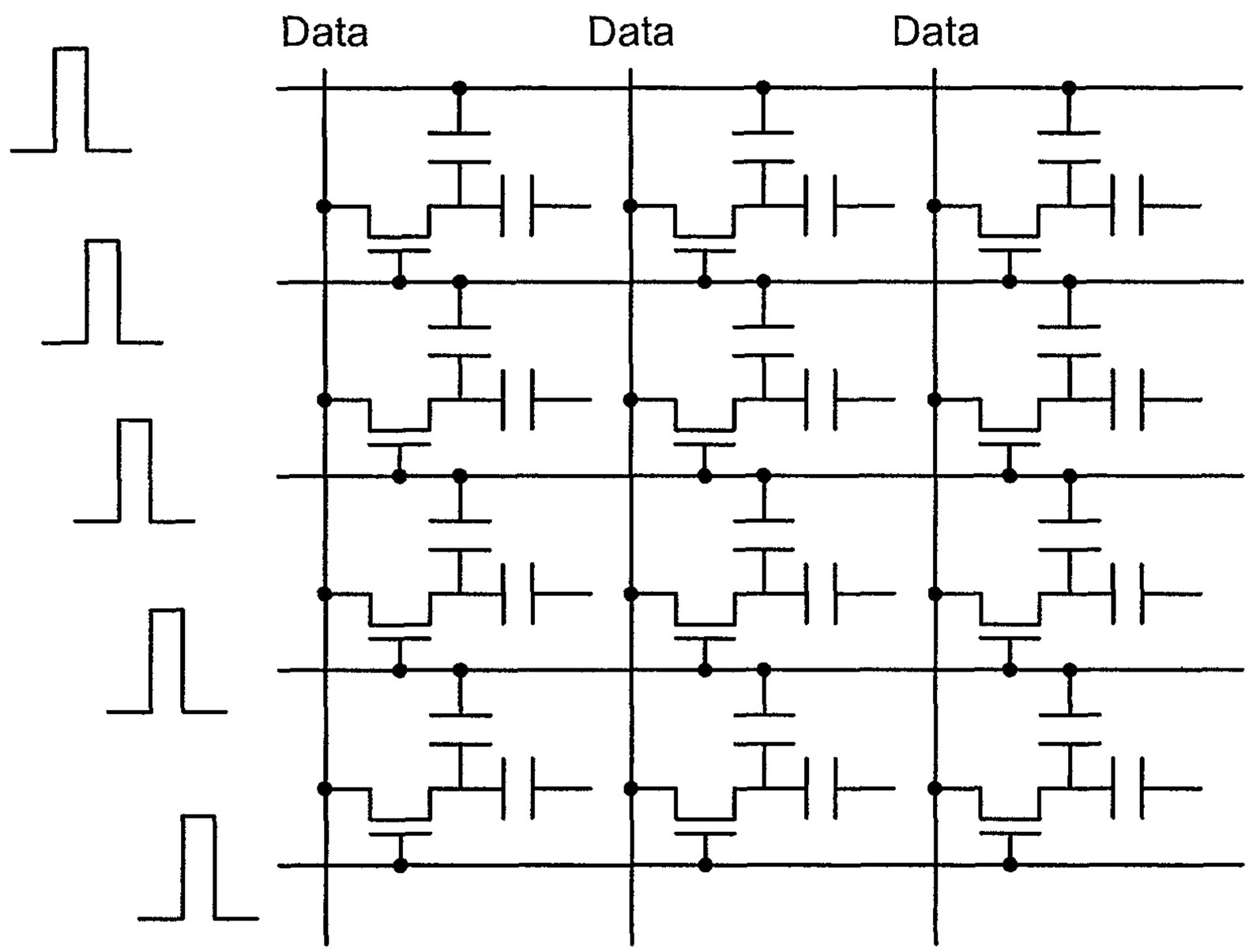

FIG. 39

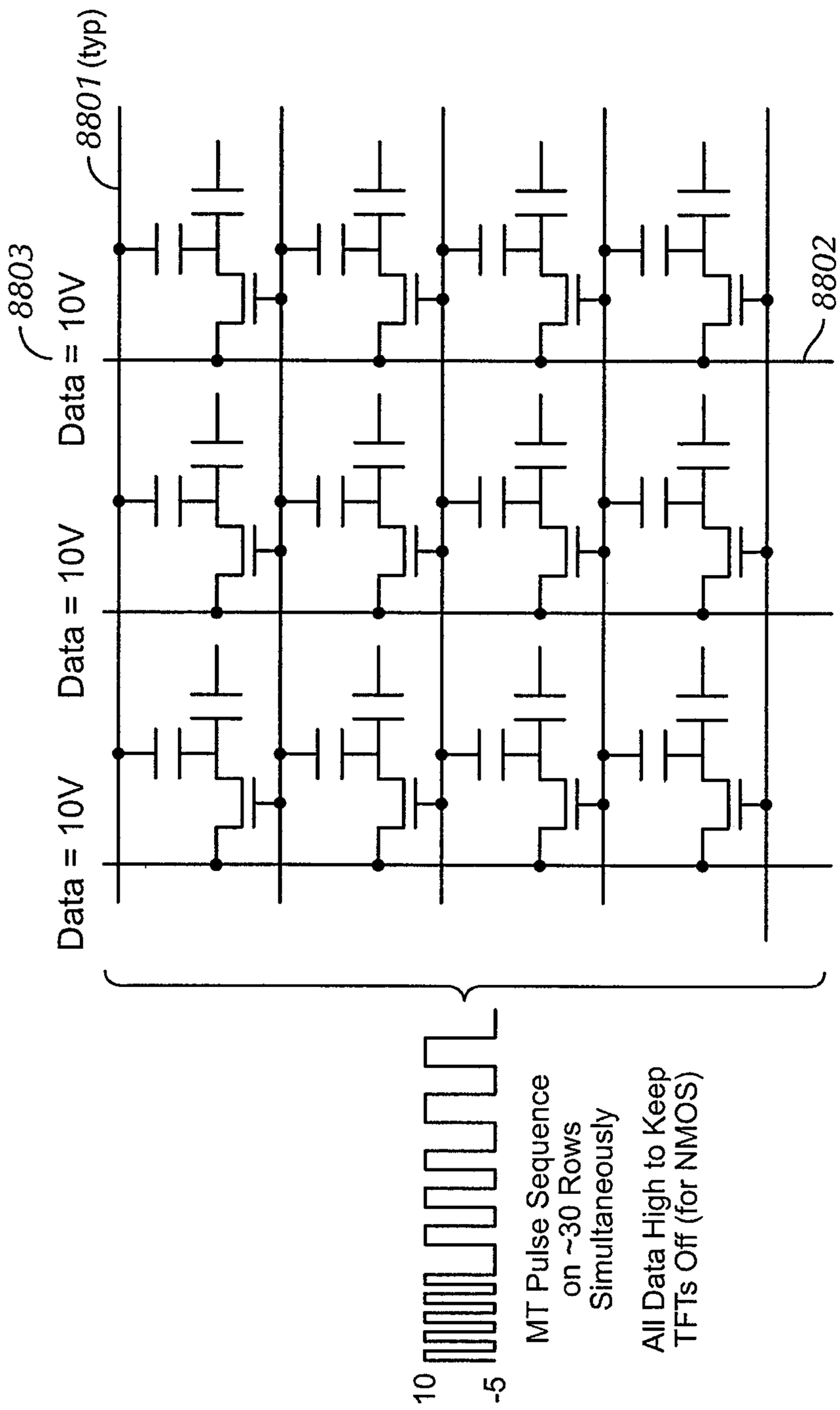
8801 (typ)
8803
Data = 10V
Data = 10V
Data = 10V
8802
10
-5
MT Pulse Sequence
on ~30 Rows
Simultaneously
All Data High to Keep
TFTs Off (for NMOS)

FIG. 40

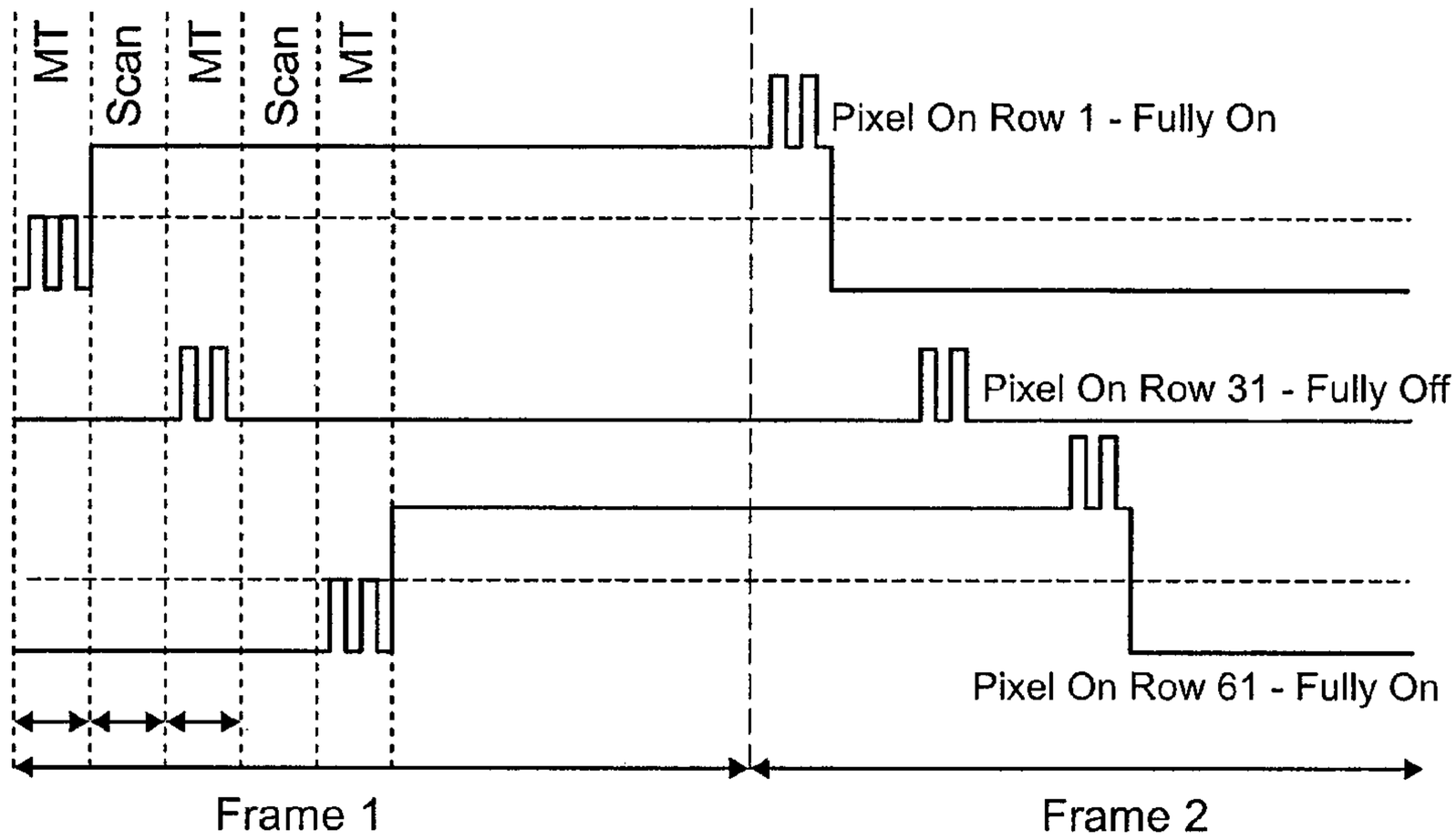
MT
Scan
MT
Scan
MT
Pixel On Row 1 - Fully On
Pixel On Row 31 - Fully Off
Pixel On Row 61 - Fully On
Frame 1
Frame 2

FIG. 41

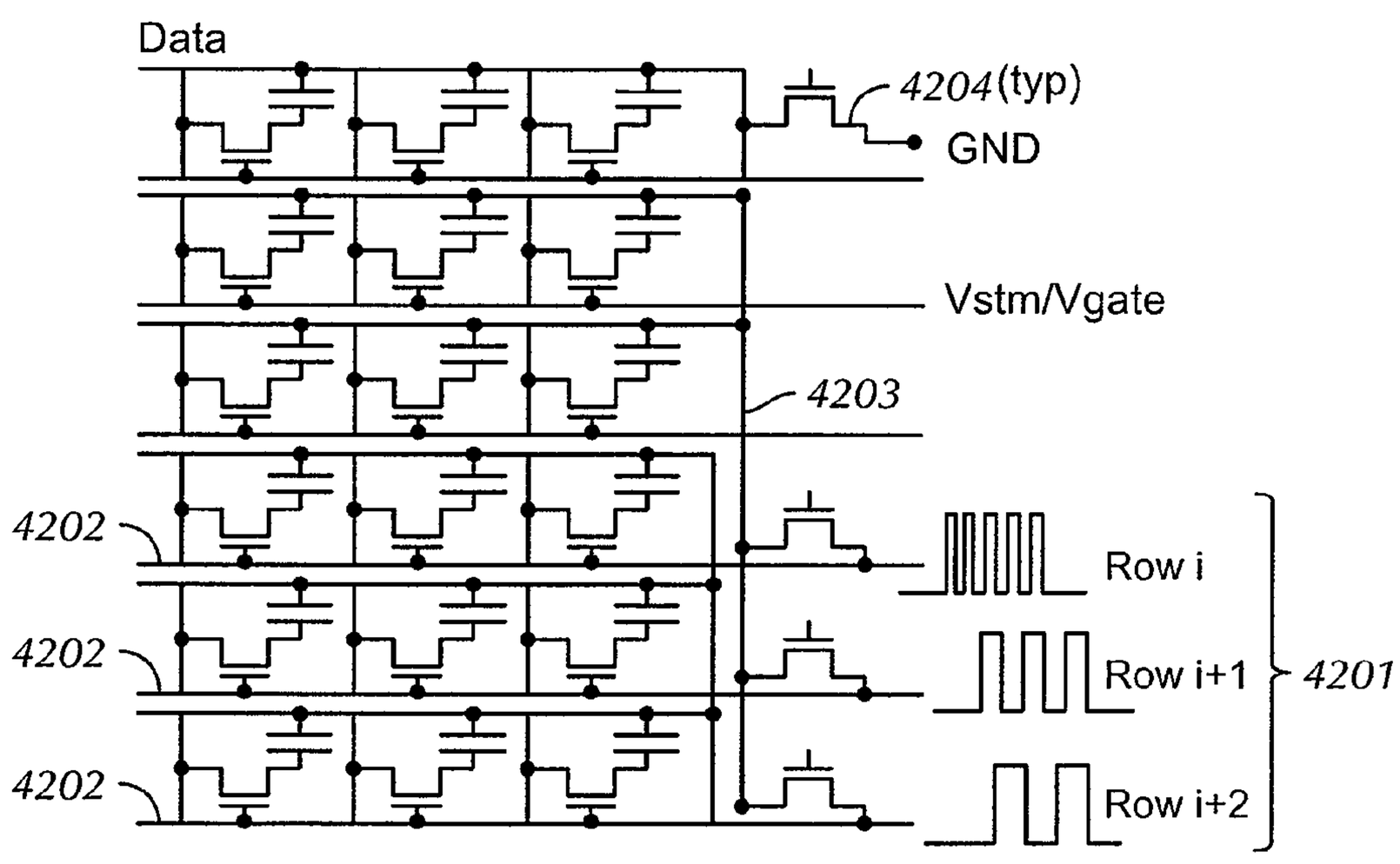
Data
4204(typ)
GND
Vstm/Vgate
4203
4202
4202
4202
Row i
Row i+1
Row i+2
4201

FIG. 42

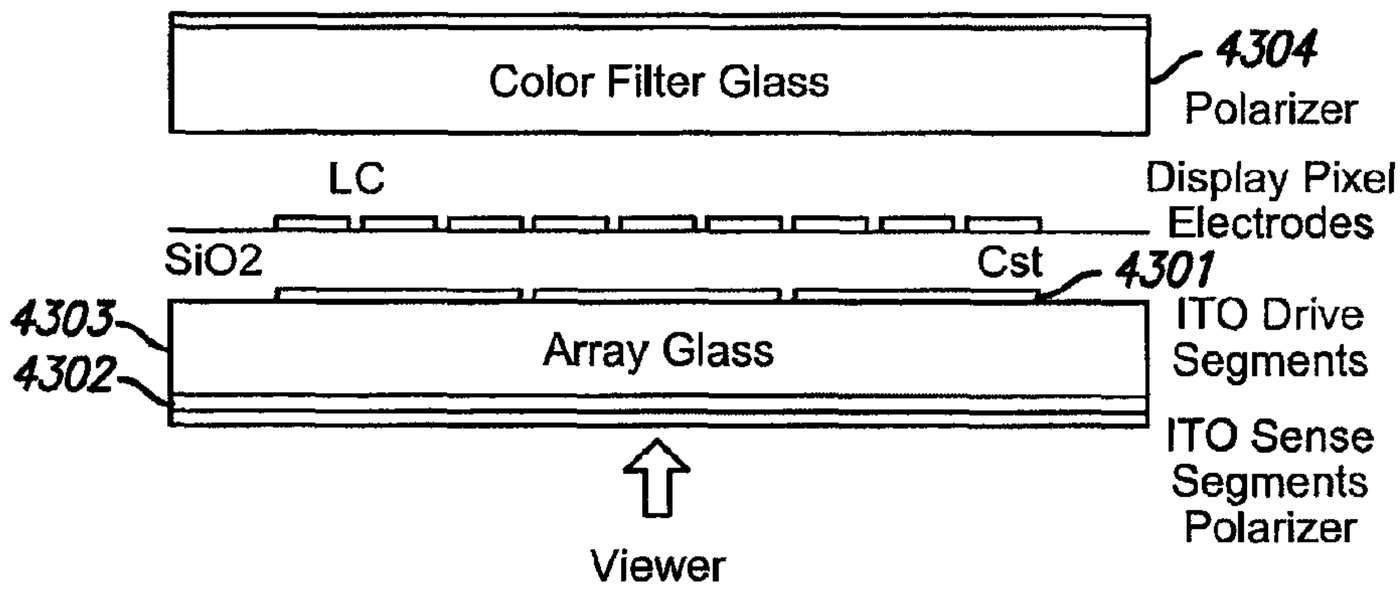
Color Filter Glass
4304
Polarizer
LC
Display Pixel
Electrodes
SiO2
Cst
4301
4303
4302
Array Glass
ITO Drive
Segments
ITO Sense
Segments
Polarizer
Viewer

FIG. 43

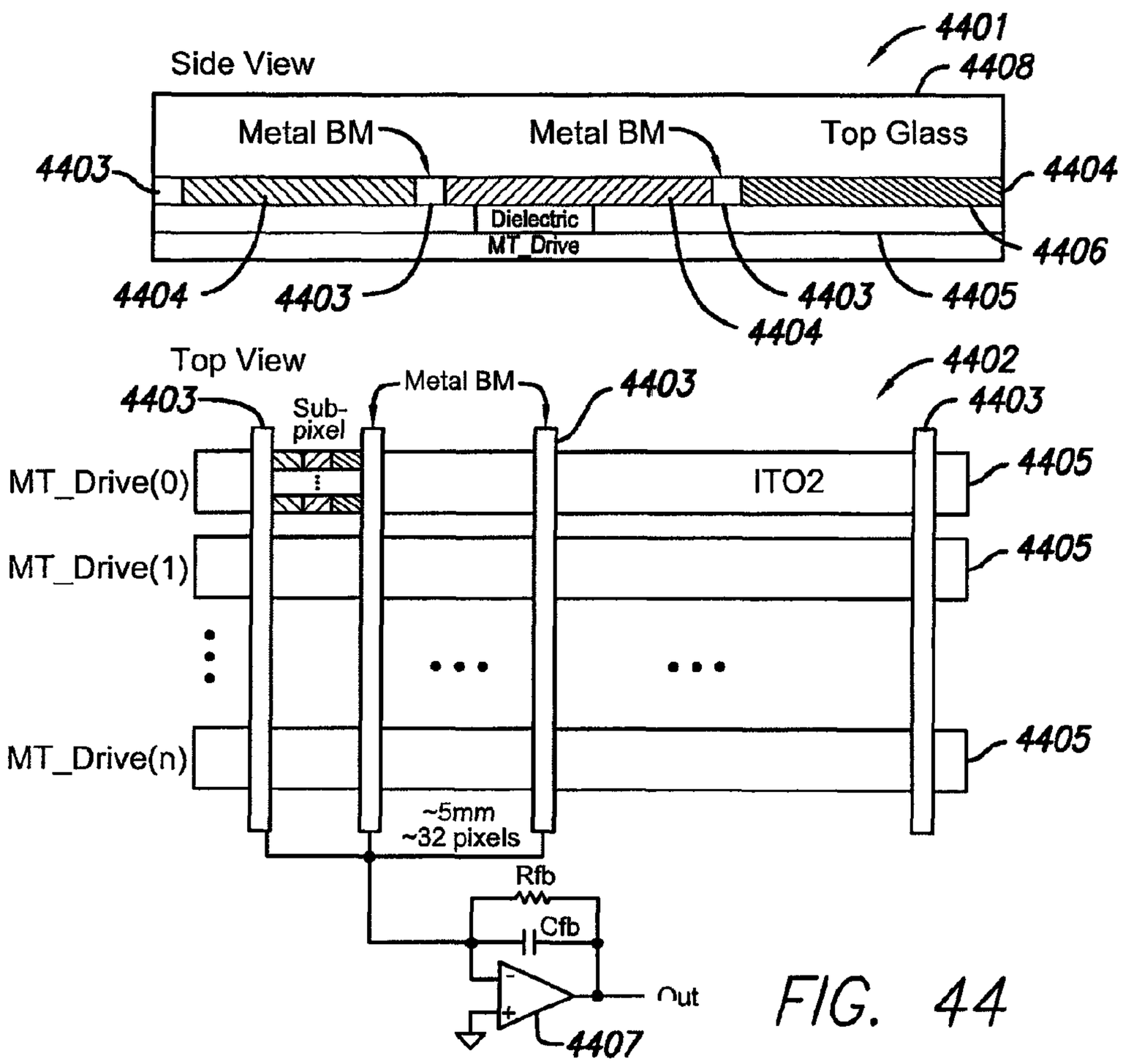
Side View
4401
4408
Metal BM
Metal BM
Top Glass
4403
4404
Dielectric
MT_Drive
4406
4404
4403
4403
4405
4404
Top View
4402
4403
Sub-
pixel
Metal BM
4403
4403
MT_Drive(0)
ITO2
4405
MT_Drive(1)
4405
MT_Drive(n)
4405
~5mm
~32 pixels
Rfb
Cfb
Out
4407

FIG. 44

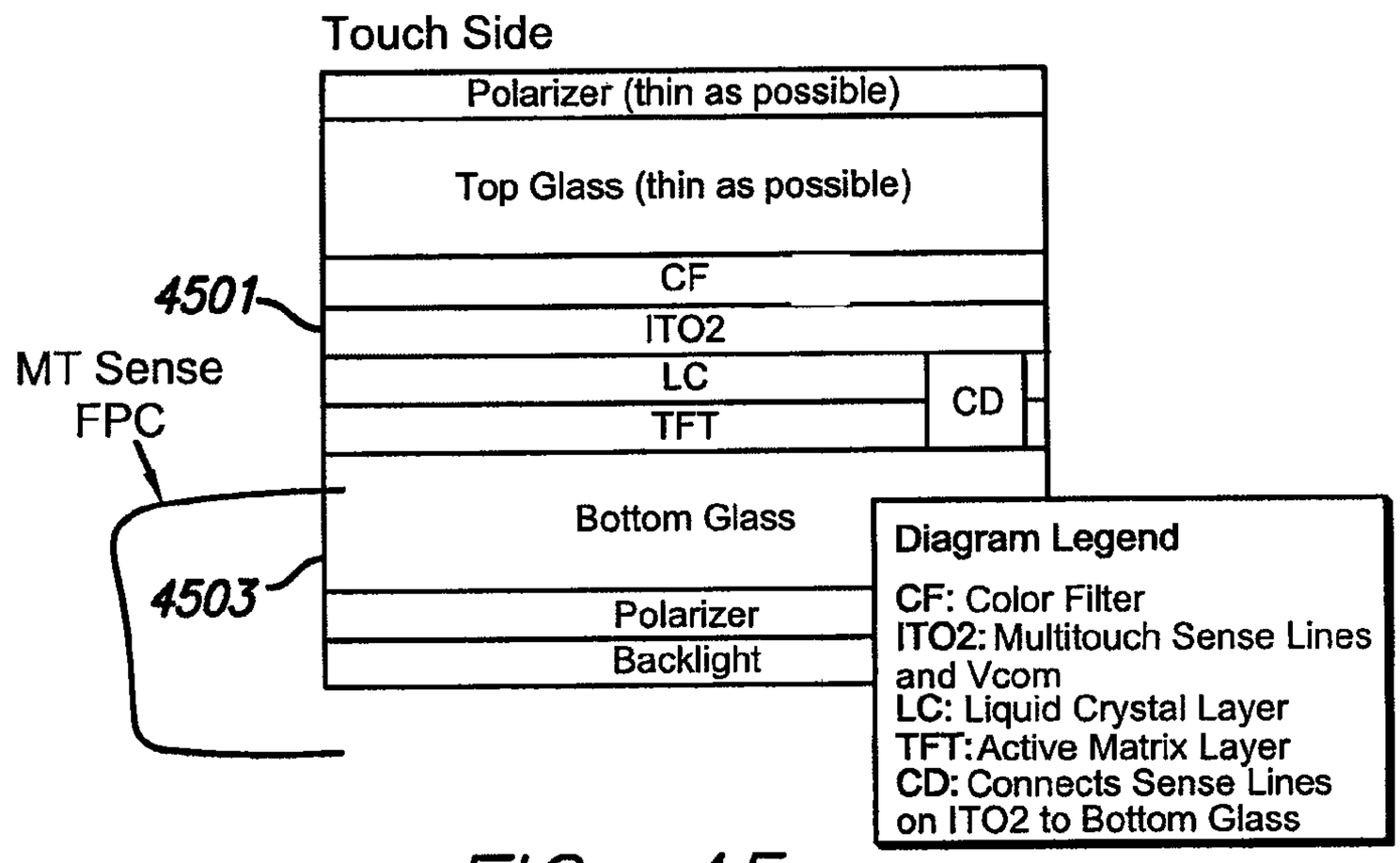
Touch Side
Polarizer (thin as possible)
Top Glass (thin as possible)
CF
ITO2
LC
TFT
CD
Bottom Glass
Polarizer
Backlight
4501
MT Sense
FPC
4503
Diagram Legend
CF: Color Filter
ITO2: Multitouch Sense Lines and Vcom
LC: Liquid Crystal Layer
TFT: Active Matrix Layer
CD: Connects Sense Lines on ITO2 to Bottom Glass

FIG. 45

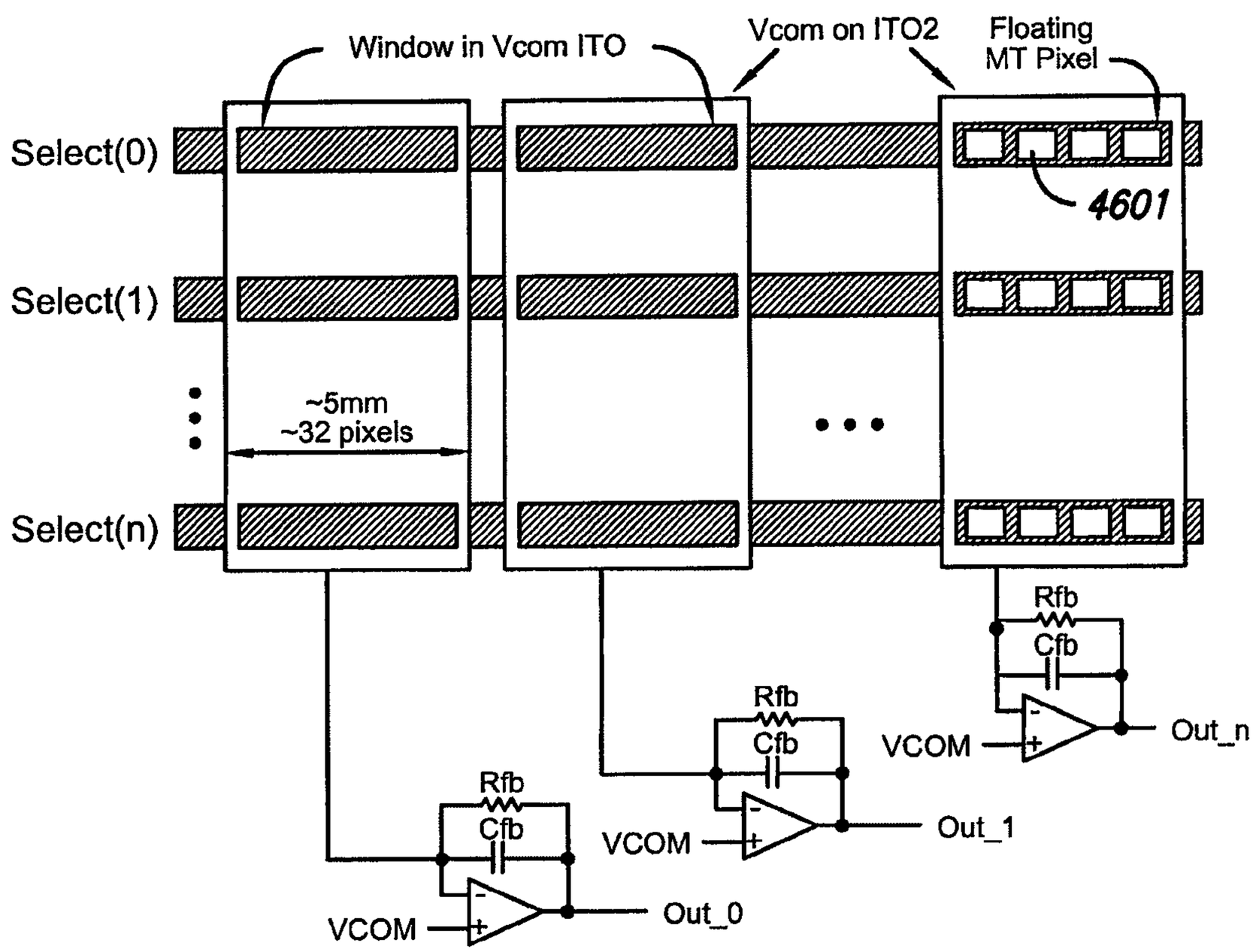
Window in Vcom ITO
Vcom on ITO2
Floating
MT Pixel
Select(0)
Select(1)
Select(n)
4601
~5mm
~32 pixels
Rfb
Cfb
VCOM
Out_n
Out_1
Out_0

FIG. 46

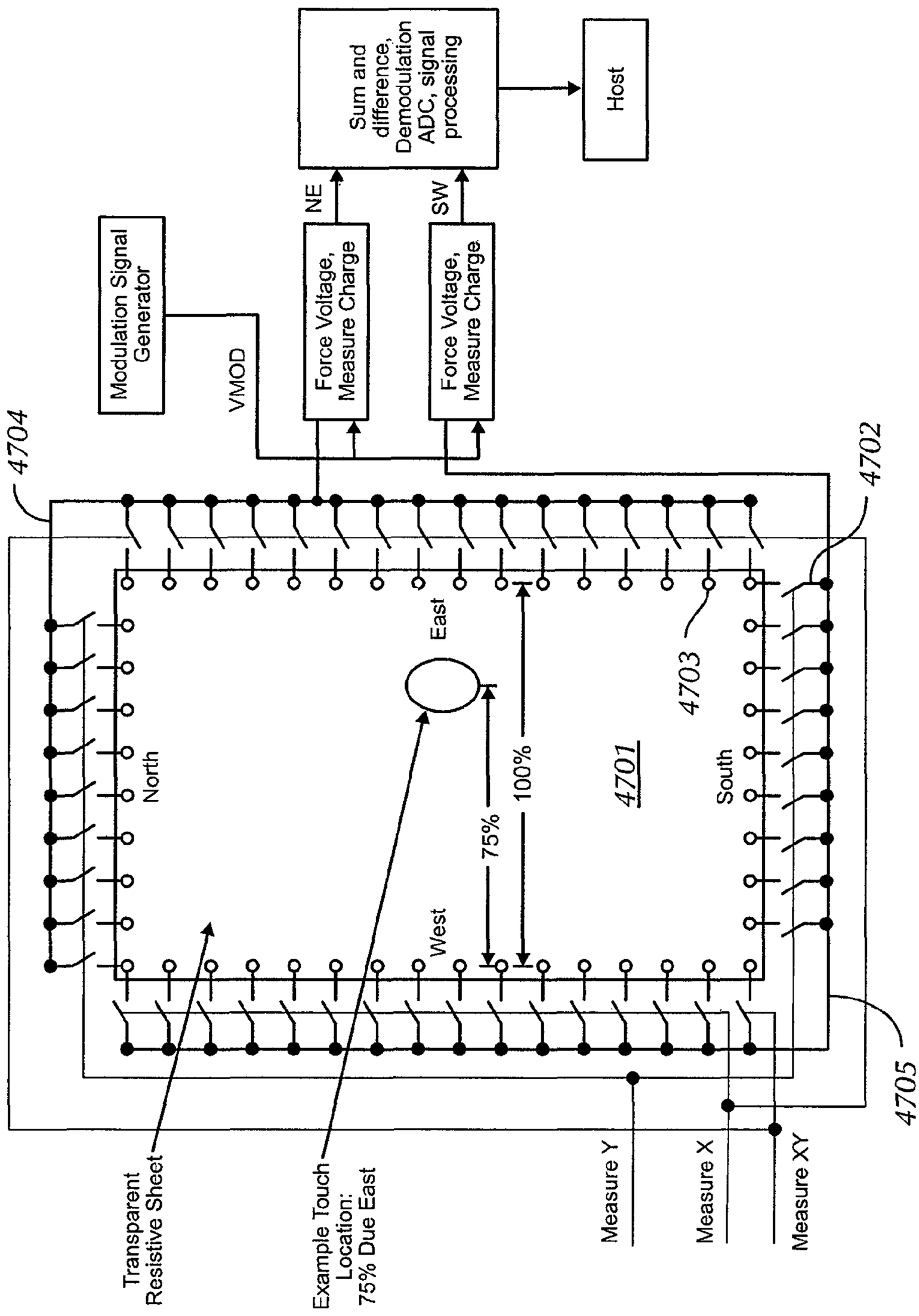
Sum and difference, Demodulation ADC, signal processing
Host
NE
SW
Modulation Signal Generator
VMOD
Force Voltage, Measure Charge
Force Voltage, Measure Charge
4704
4702
East
North
West
South
75%
100%
4701
4703
4705
Transparent Resistive Sheet
Example Touch Location: 75% Due East
Measure Y
Measure X
Measure XY

FIG. 47

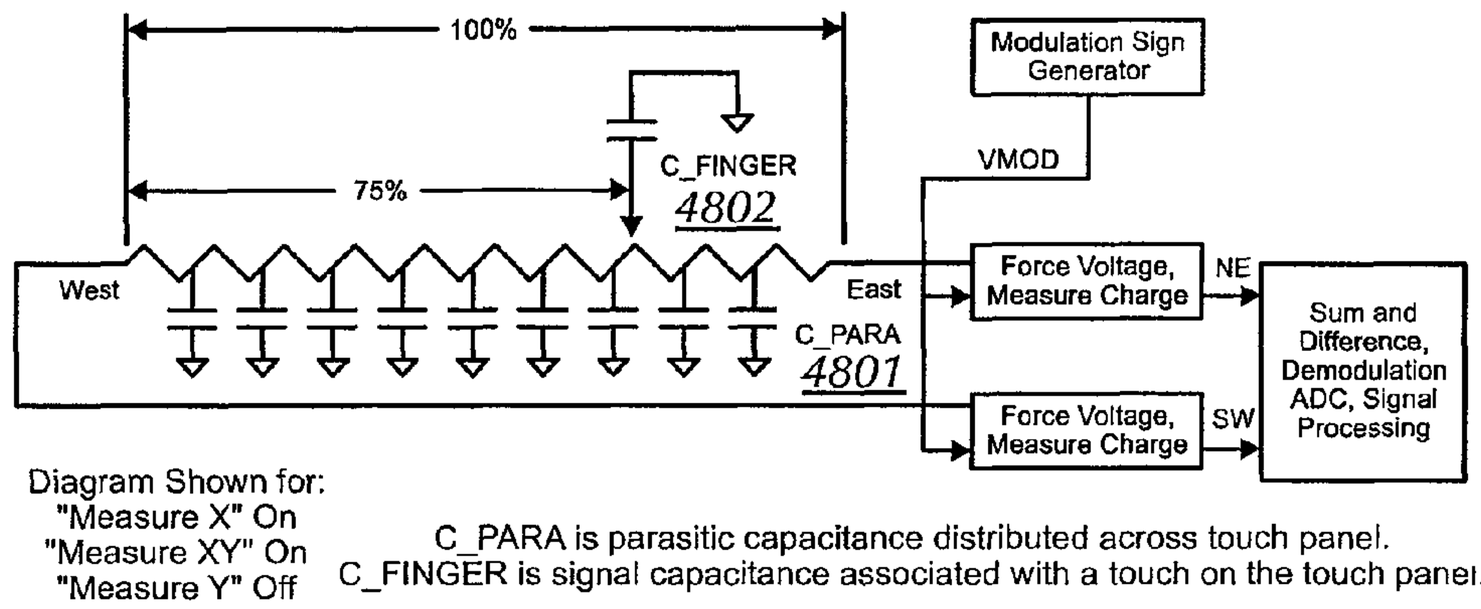

FIG. 48

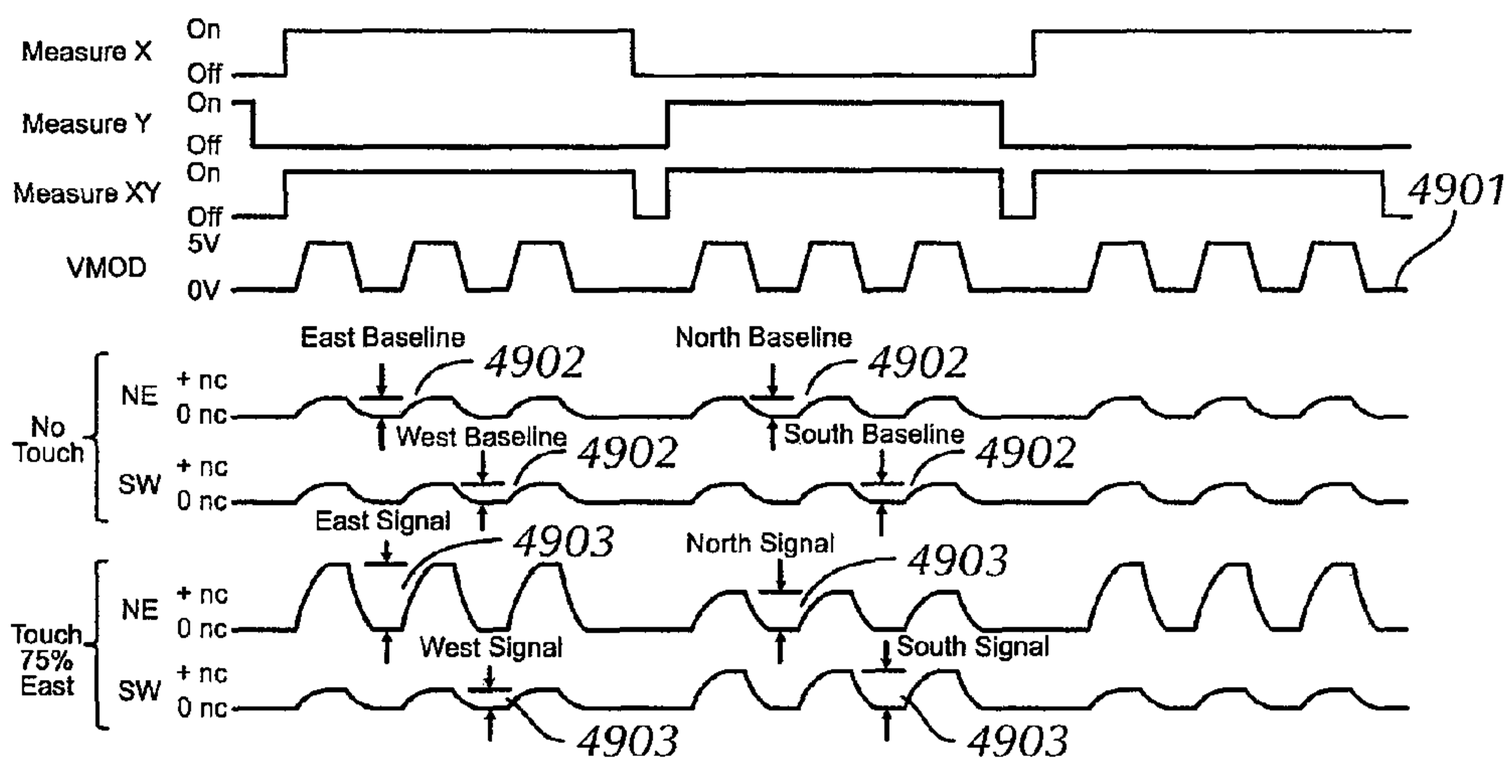

Zew = (East Signal - East Baseline)
+ (West Signal - West Baseline)
X = (East Signal - East Baseline) / Zew

Zns = (North Signal - North Baseline)
+ (South Signal - South Baseline)
Y = (North Signal - North Baseline) / Zns

FIG. 49

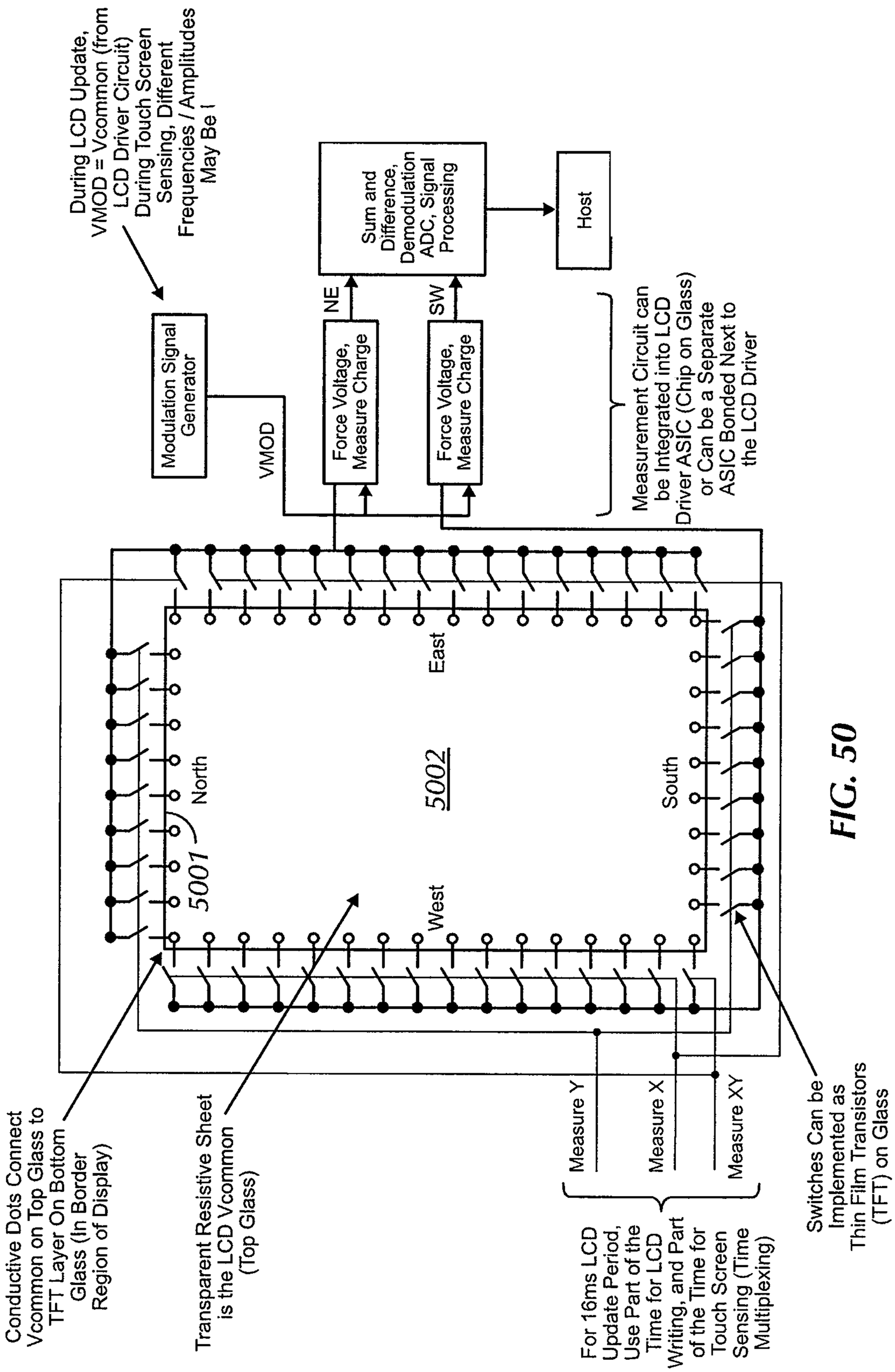
During LCD Update, VMOD = Vcommon (from LCD Driver Circuit)
During Touch Screen Sensing, Different Frequencies / Amplitudes May Be !
Modulation Signal Generator
VMOD
Force Voltage, Measure Charge
Force Voltage, Measure Charge
NE
SW
Sum and Difference, Demodulation ADC, Signal Processing
Host
Measurement Circuit can be Integrated into LCD Driver ASIC (Chip on Glass) or Can be a Separate ASIC Bonded Next to the LCD Driver
East
North
South
West
5001
5002
Measure Y
Measure X
Measure XY
Conductive Dots Connect Vcommon on Top Glass to TFT Layer On Bottom Glass (In Border Region of Display)
Transparent Resistive Sheet is the LCD Vcommon (Top Glass)
For 16ms LCD Update Period, Use Part of the Time for LCD Writing, and Part of the Time for Touch Screen Sensing (Time Multiplexing)
Switches Can be Implemented as Thin Film Transistors (TFT) on Glass

FIG. 50

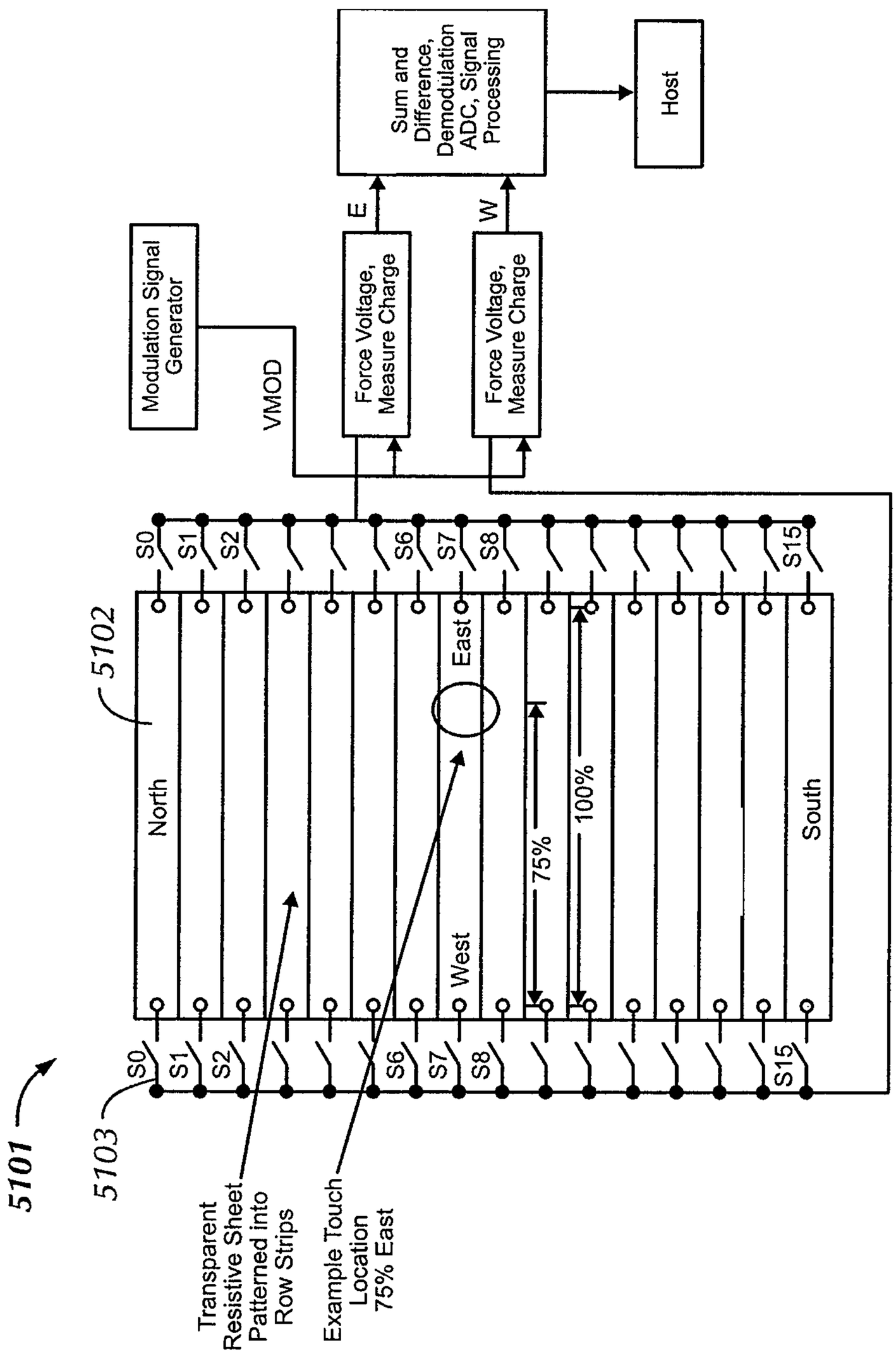
Sum and Difference, Demodulation ADC, Signal Processing
Host
E
W
Modulation Signal Generator
VMOD
Force Voltage, Measure Charge
Force Voltage, Measure Charge
S0
S1
S2
S6
S7
S8
S15
5102
North
East
West
South
75%
100%
5101
5103
Transparent Resistive Sheet Patterned into Row Strips
Example Touch Location 75% East

FIG. 51

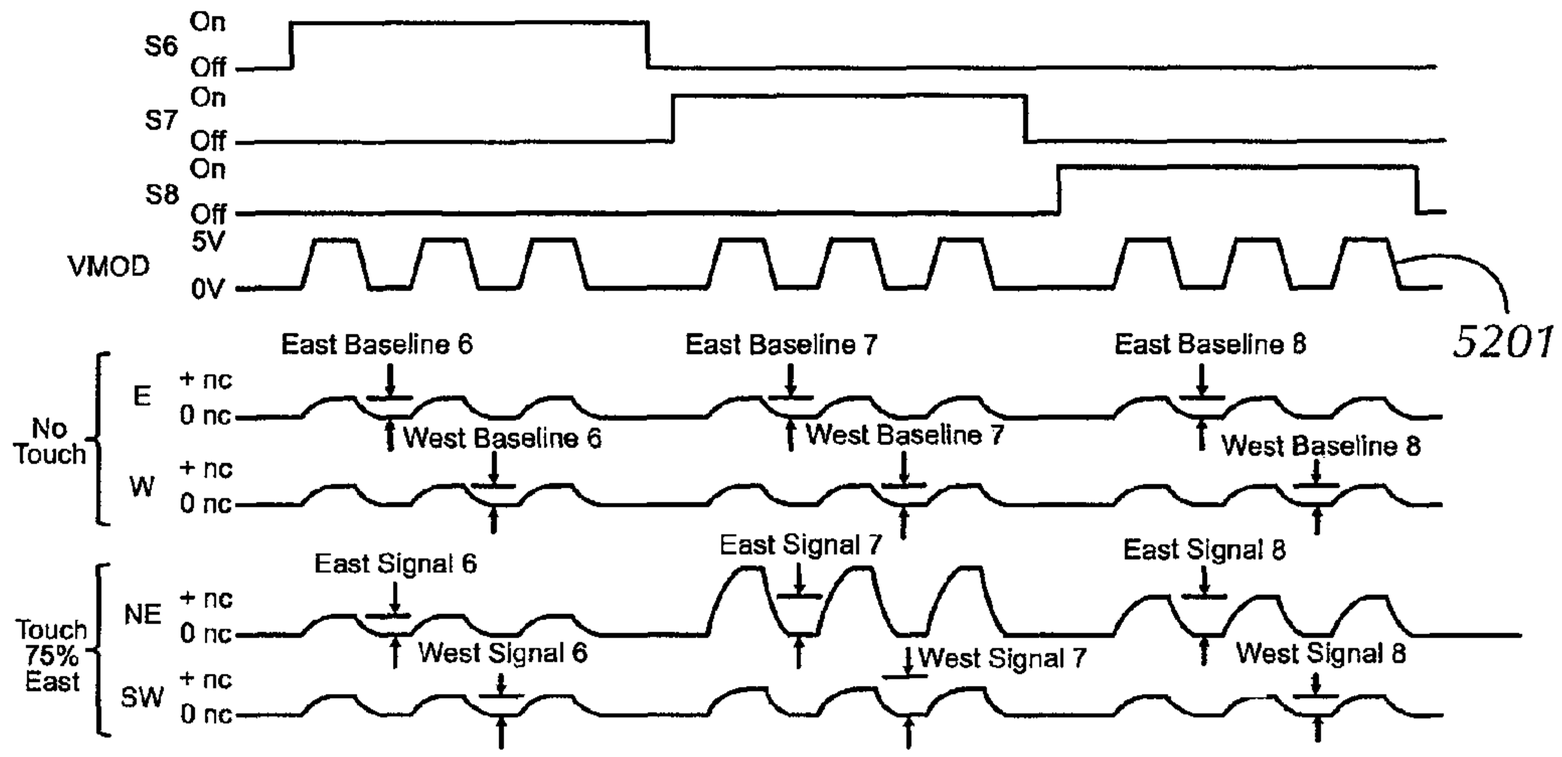

Z7 = East Signal 7 - East Baseline 7)
+ (West Signal 7 - West Baseline 7)
X7 = (East Signal 7 - East Baseline 7) / Z7

Z6 = (East Signal 6 - East Baseline 6)
+ (West Signal 6 - West Baseline 6)
X6 = (East Signal 6 - East Baseline 6) / Z6

Z8 = (East Signal 8 - East Baseline 8)
+ (West Signal 8 - West Baseline 8)
X8 = (East Signal 8 - East Baseline 8) / Z8

Y output(s) are determined by centroids of Z outputs for each row.
X output(s) are determined by weighted average of X outputs for each row.

FIG. 52

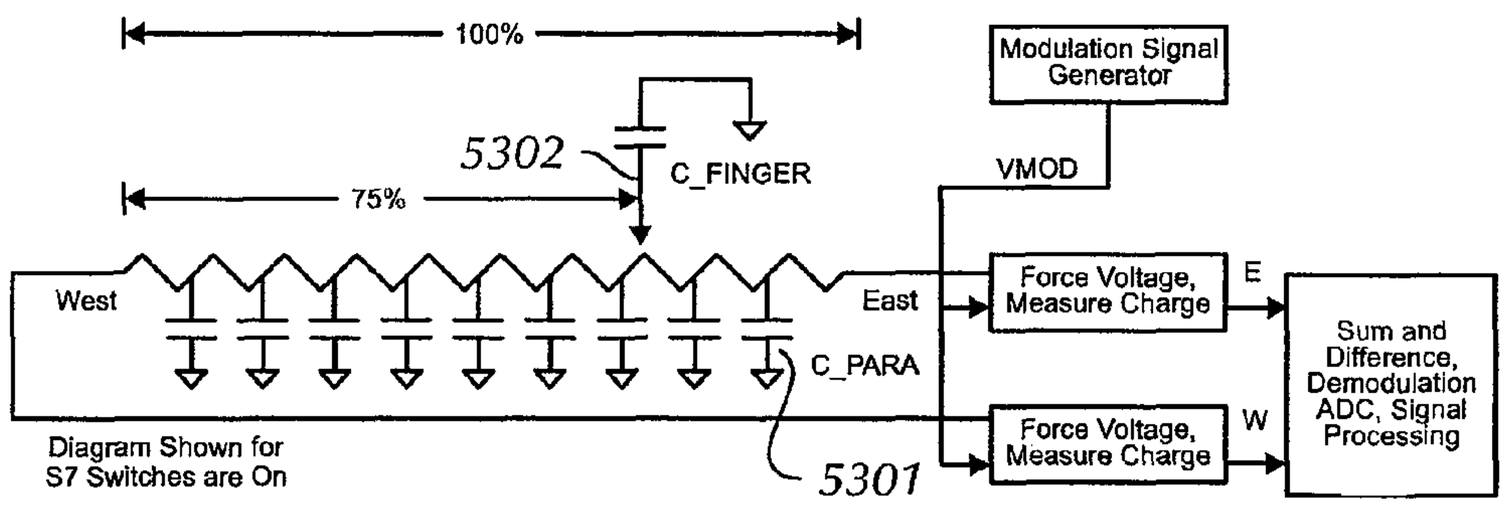

C_PARA is parasitic capacitance distributed across raw strip.
C_FINGER is signal capacitance associated with a touch on the touch panel.

FIG. 53

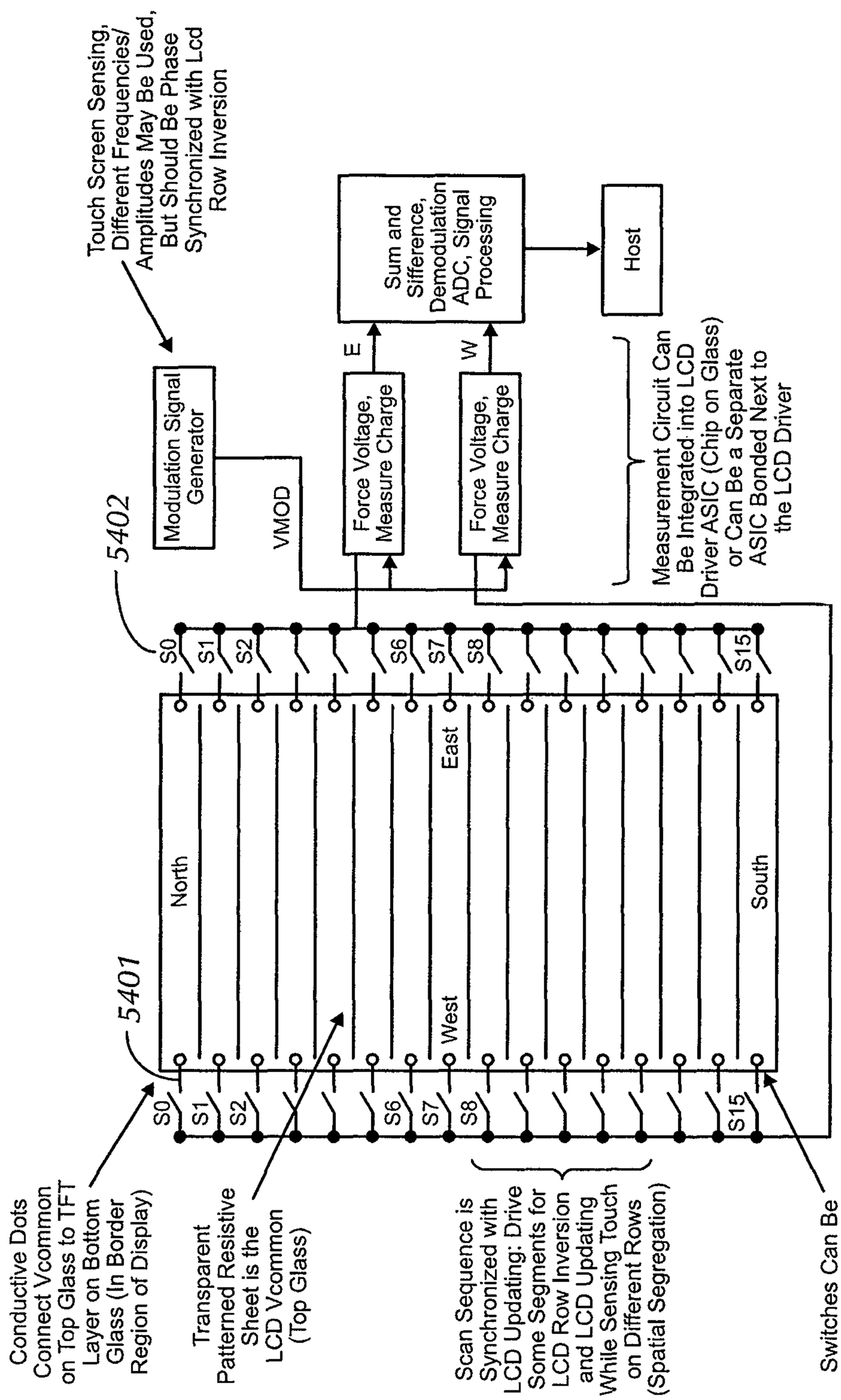
Touch Screen Sensing, Different Frequencies/ Amplitudes May Be Used, But Should Be Phase Synchronized with Lcd Row Inversion
Modulation Signal Generator
VMOD
Force Voltage, Measure Charge
Force Voltage, Measure Charge
E
W
Sum and Sifference, Demodulation ADC, Signal Processing
Host
Measurement Circuit Can Be Integrated into LCD Driver ASIC (Chip on Glass) or Can Be a Separate ASIC Bonded Next to the LCD Driver
5402
5401
S0
S1
S2
S6
S7
S8
S15
North
West
East
South
Conductive Dots Connect Vcommon on Top Glass to TFT Layer on Bottom Glass (In Border Region of Display)
Transparent Patterned Resistive Sheet is the LCD Vcommon (Top Glass)
Scan Sequence is Synchronized with LCD Updating: Drive Some Segments for LCD Row Inversion and LCD Updating While Sensing Touch on Different Rows (Spatial Segregation)
Switches Can Be Implemented as Thin Film Transistors (TFT) on Glass

FIG. 54

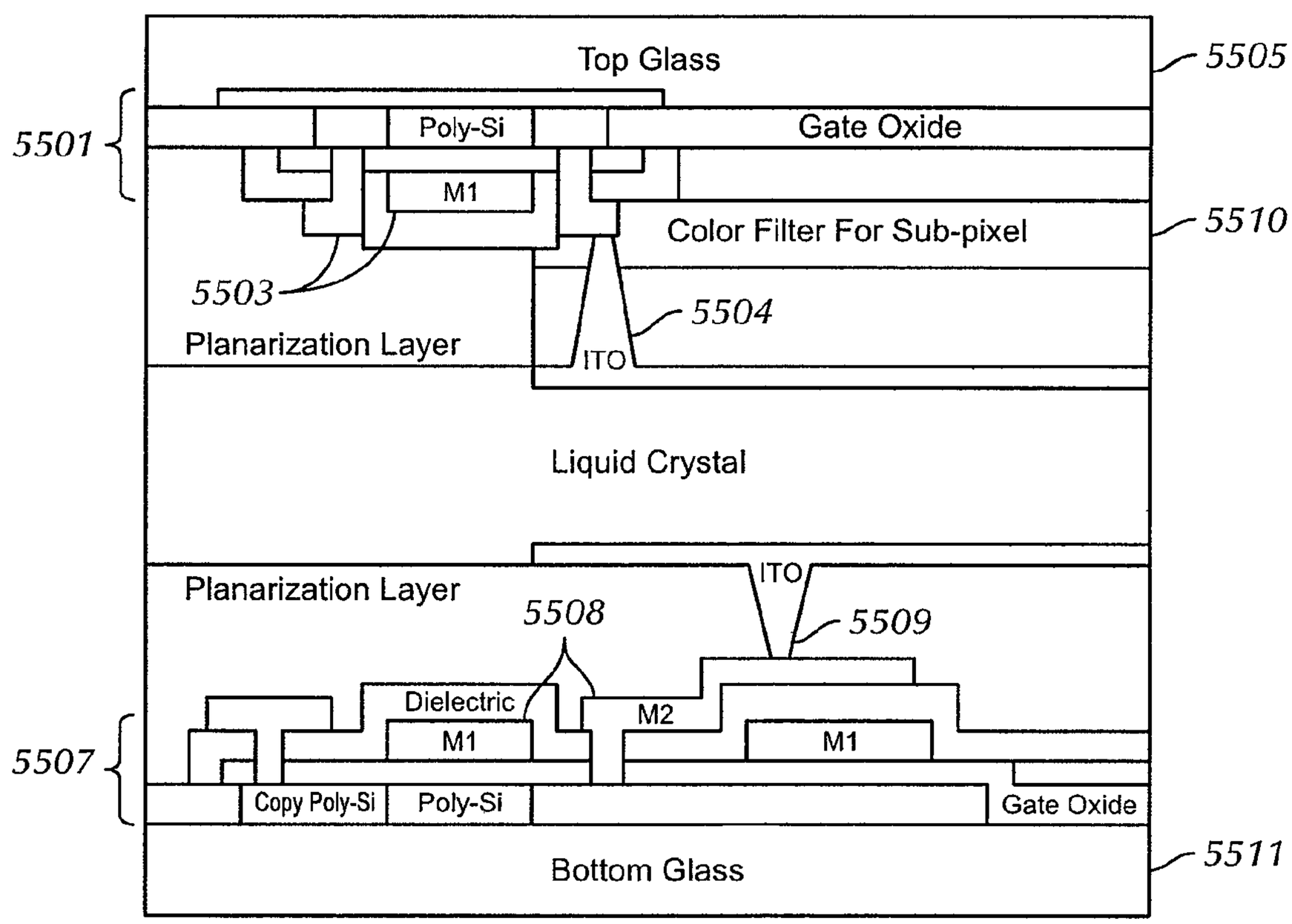
Top Glass
5505
5501
Poly-Si
Gate Oxide
M1
Color Filter For Sub-pixel
5510
5503
5504
Planarization Layer
ITO
Liquid Crystal
Planarization Layer
ITO
5508
5509
Dielectric
M2
M1
M1
5507
Copy Poly-Si
Poly-Si
Gate Oxide
Bottom Glass
5511

FIG. 55

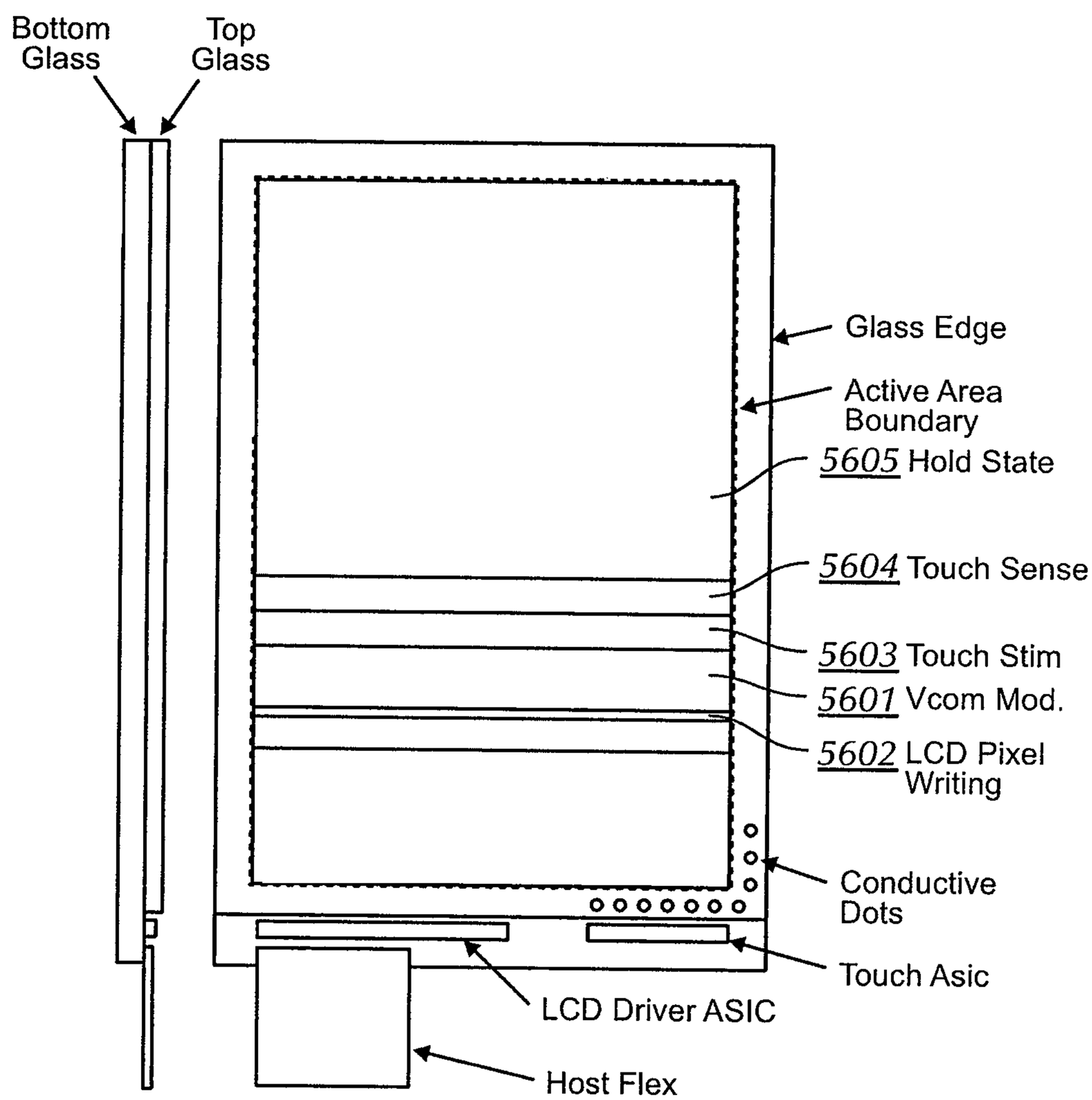
Bottom Glass
Top Glass
Glass Edge
Active Area Boundary
5605 Hold State
5604 Touch Sense
5603 Touch Stim
5601 Vcom Mod.
5602 LCD Pixel Writing
Conductive Dots
Touch Asic
LCD Driver ASIC
Host Flex

FIG. 56

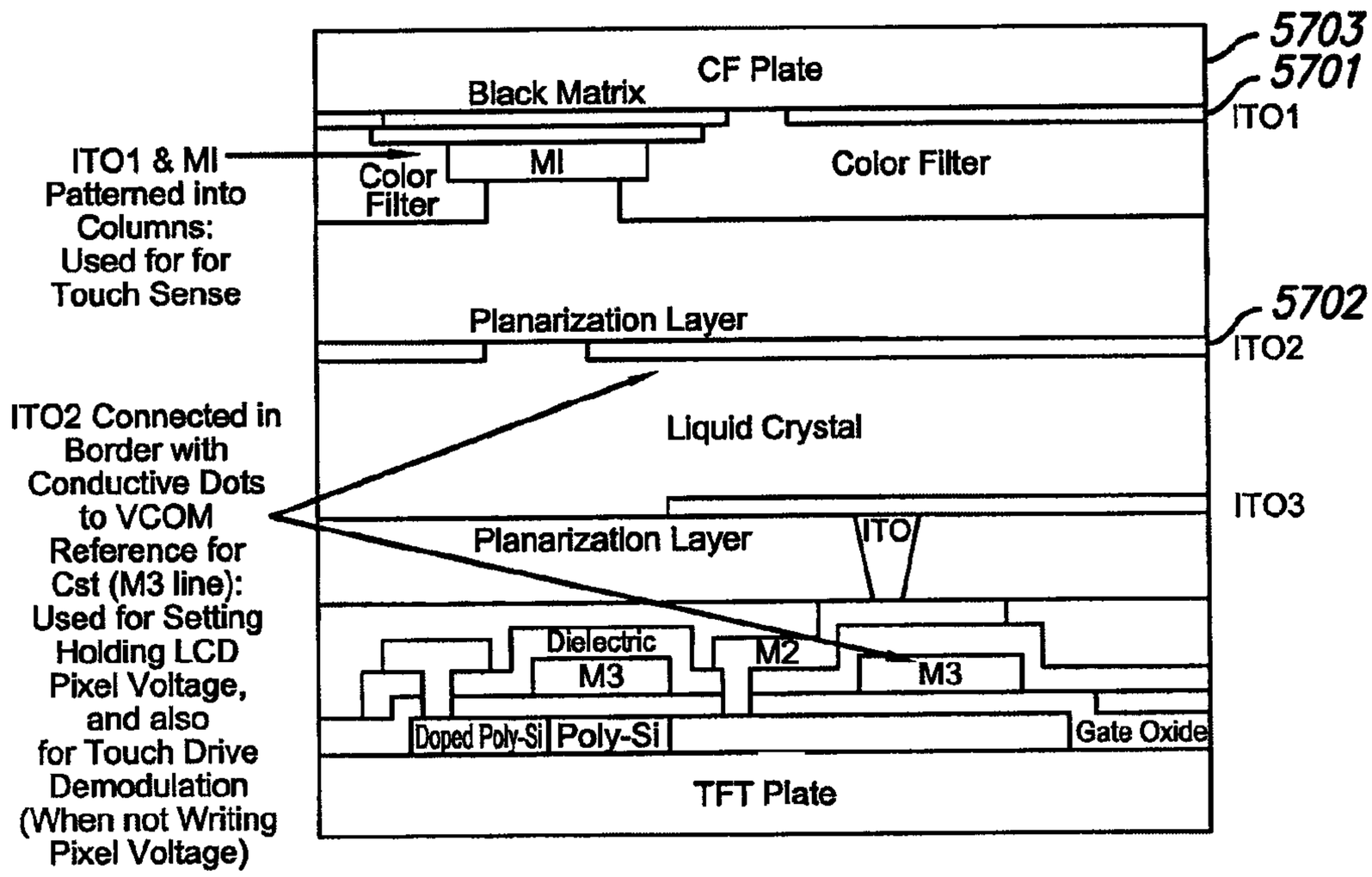
5703
5701
ITO1
CF Plate
Black Matrix
ITO1 & MI Patterned into Columns: Used for for Touch Sense
Color Filter
MI
Color Filter
5702
ITO2
Planarization Layer
ITO2 Connected in Border with Conductive Dots to VCOM Reference for Cst (M3 line): Used for Setting Holding LCD Pixel Voltage, and also for Touch Drive Demodulation (When not Writing Pixel Voltage)
Liquid Crystal
ITO3
Planarization Layer
ITO
Dielectric
M3
M2
M3
Doped Poly-Si
Poly-Si
Gate Oxide
TFT Plate

FIG. 57

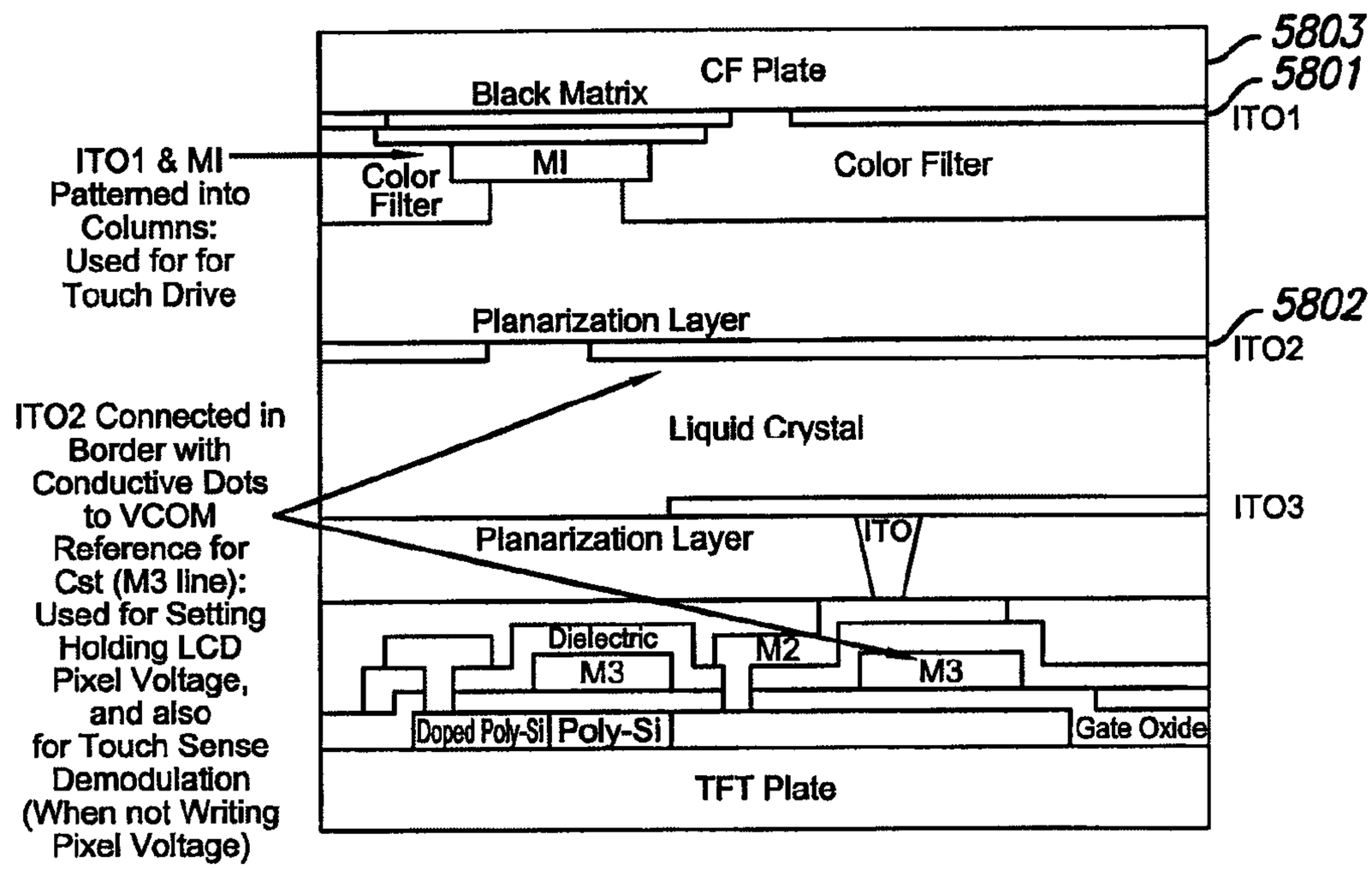
5803
5801
ITO1
CF Plate
Black Matrix
ITO1 & MI Patterned into Columns: Used for for Touch Drive
Color Filter
MI
Color Filter
5802
ITO2
Planarization Layer
ITO2 Connected in Border with Conductive Dots to VCOM Reference for Cst (M3 line): Used for Setting Holding LCD Pixel Voltage, and also for Touch Sense Demodulation (When not Writing Pixel Voltage)
Liquid Crystal
ITO3
Planarization Layer
ITO
Dielectric
M3
M2
M3
Doped Poly-Si
Poly-Si
Gate Oxide
TFT Plate

FIG. 58

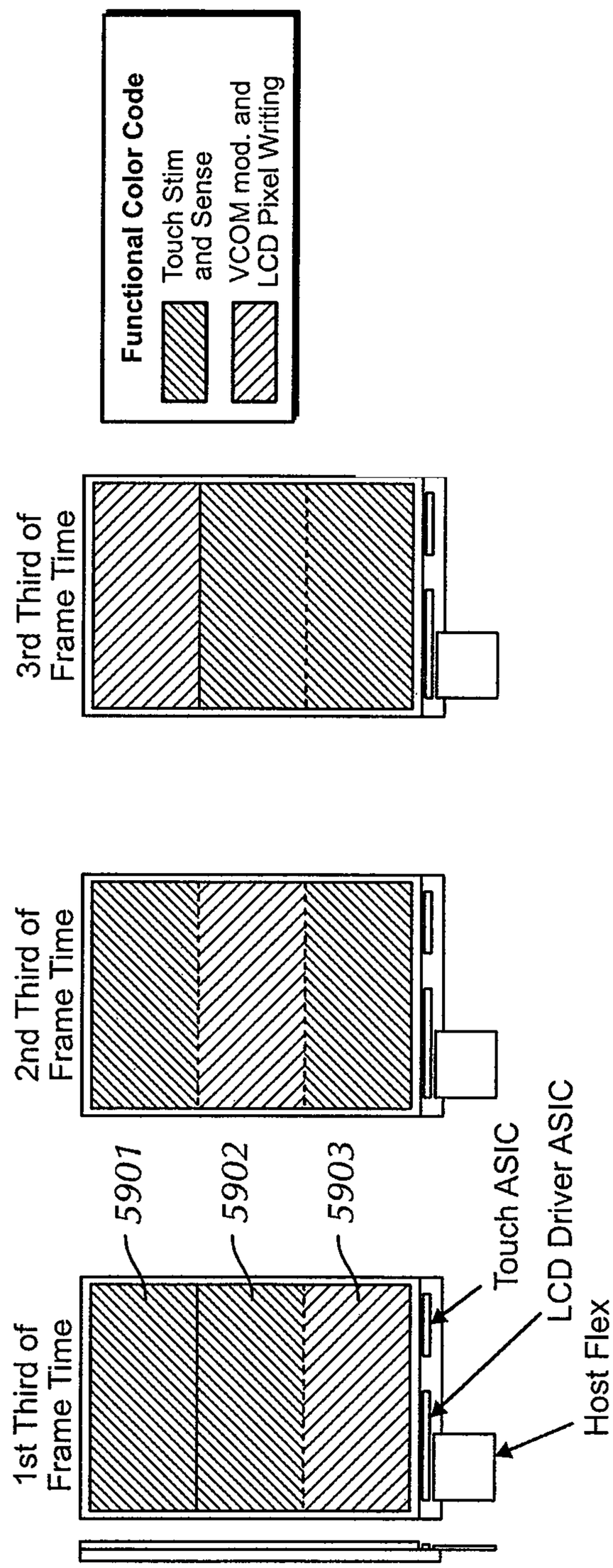
Functional Color Code
Touch Stim and Sense
VCOM mod. and LCD Pixel Writing
3rd Third of Frame Time
2nd Third of Frame Time
1st Third of Frame Time
5901
5902
5903
Touch ASIC
LCD Driver ASIC
Host Flex

FIG. 59

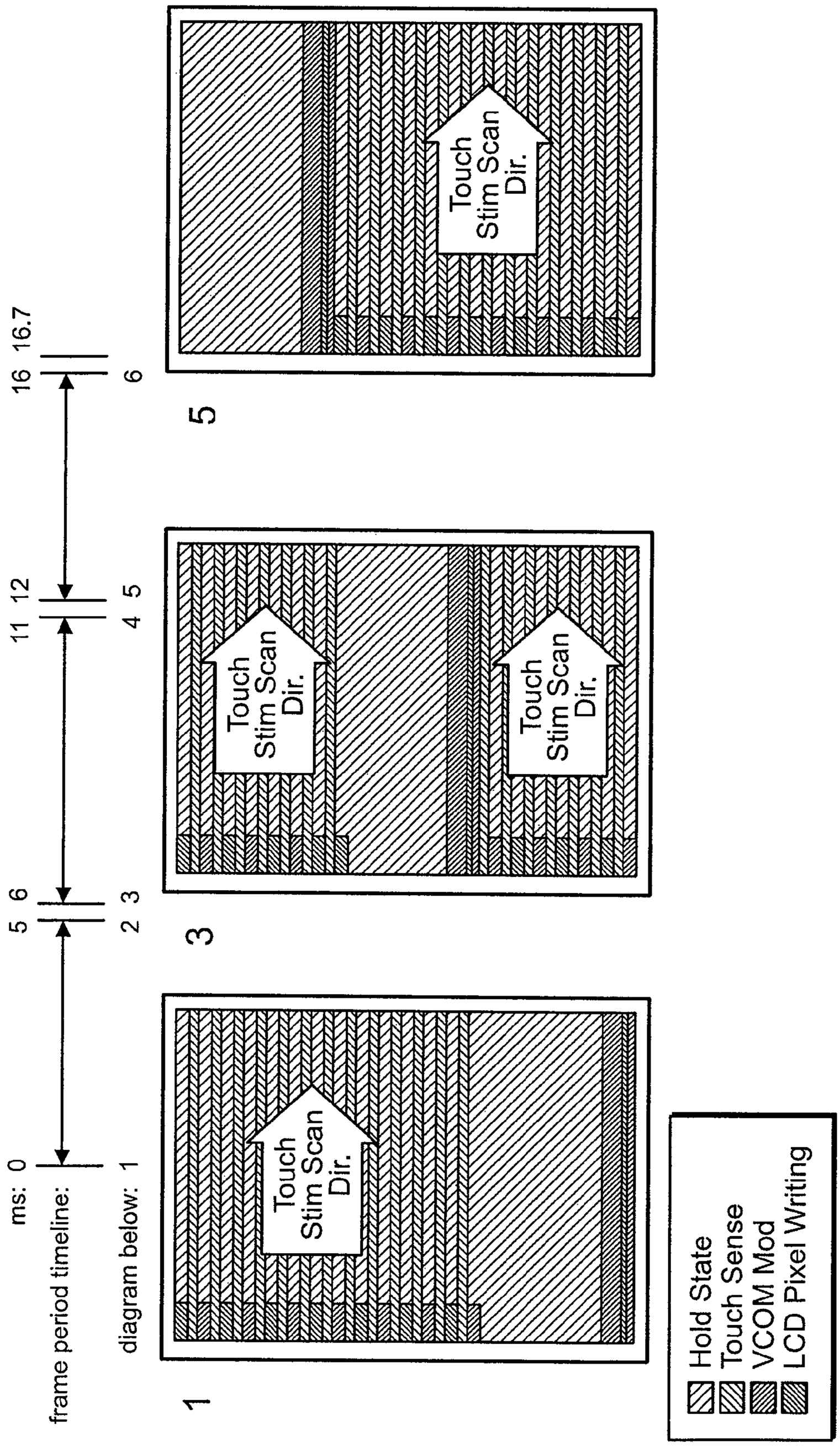
ms: 0
16
16.7
frame period timeline:
5
6
11
12
diagram below: 1
2
3
4
5
6
1
3
5
Touch Stim Scan Dir.
Touch Stim Scan Dir.
Touch Stim Scan Dir.
Touch Stim Scan Dir.
Hold State
Touch Sense
VCOM Mod
LCD Pixel Writing

FIG. 60A

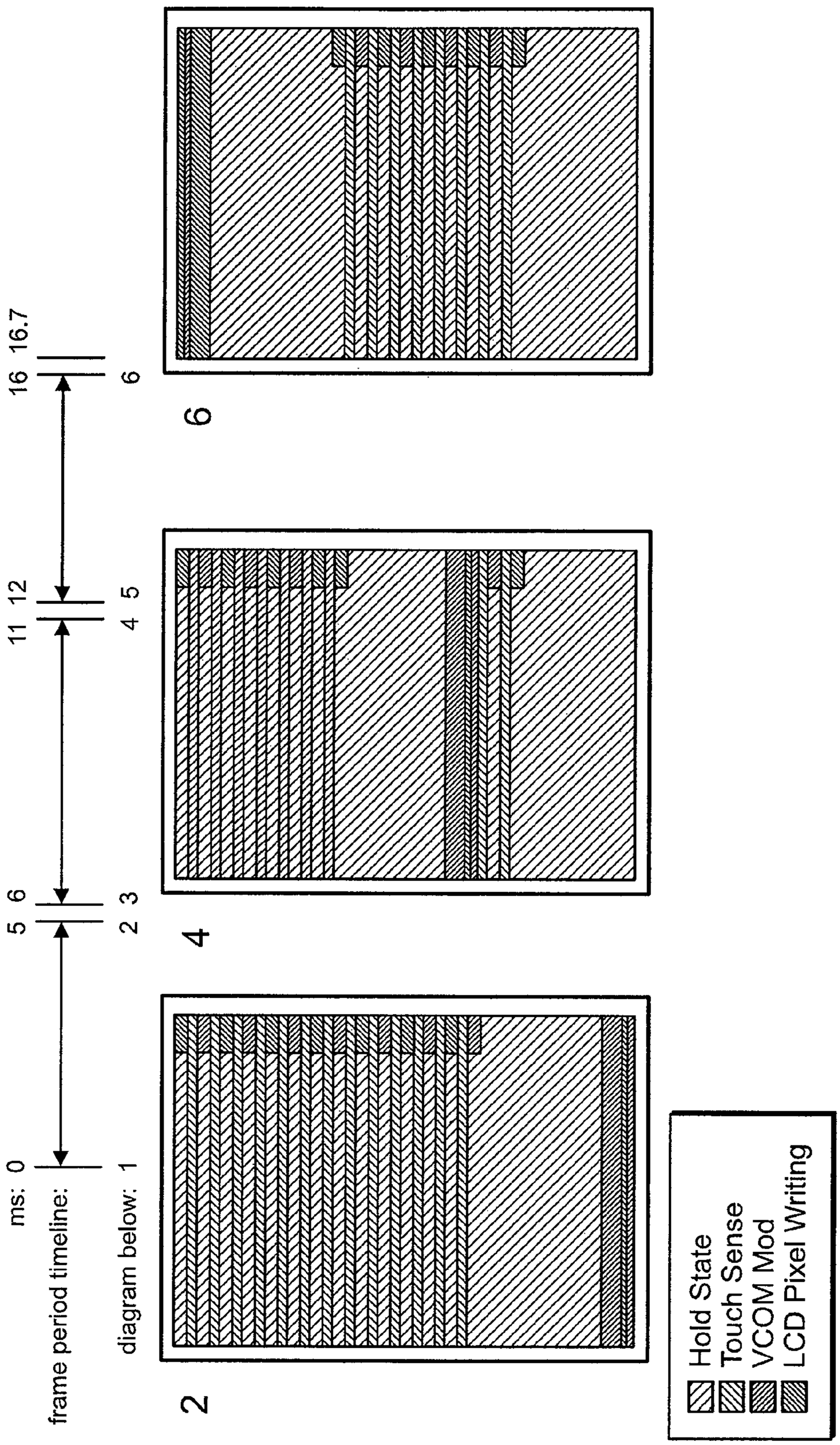
ms: 0
frame period timeline:
diagram below: 1
5 6
11 12
16 16.7
2 3
4 5
6 6
2
4
Hold State
Touch Sense
VCOM Mod
LCD Pixel Writing

FIG. 60B

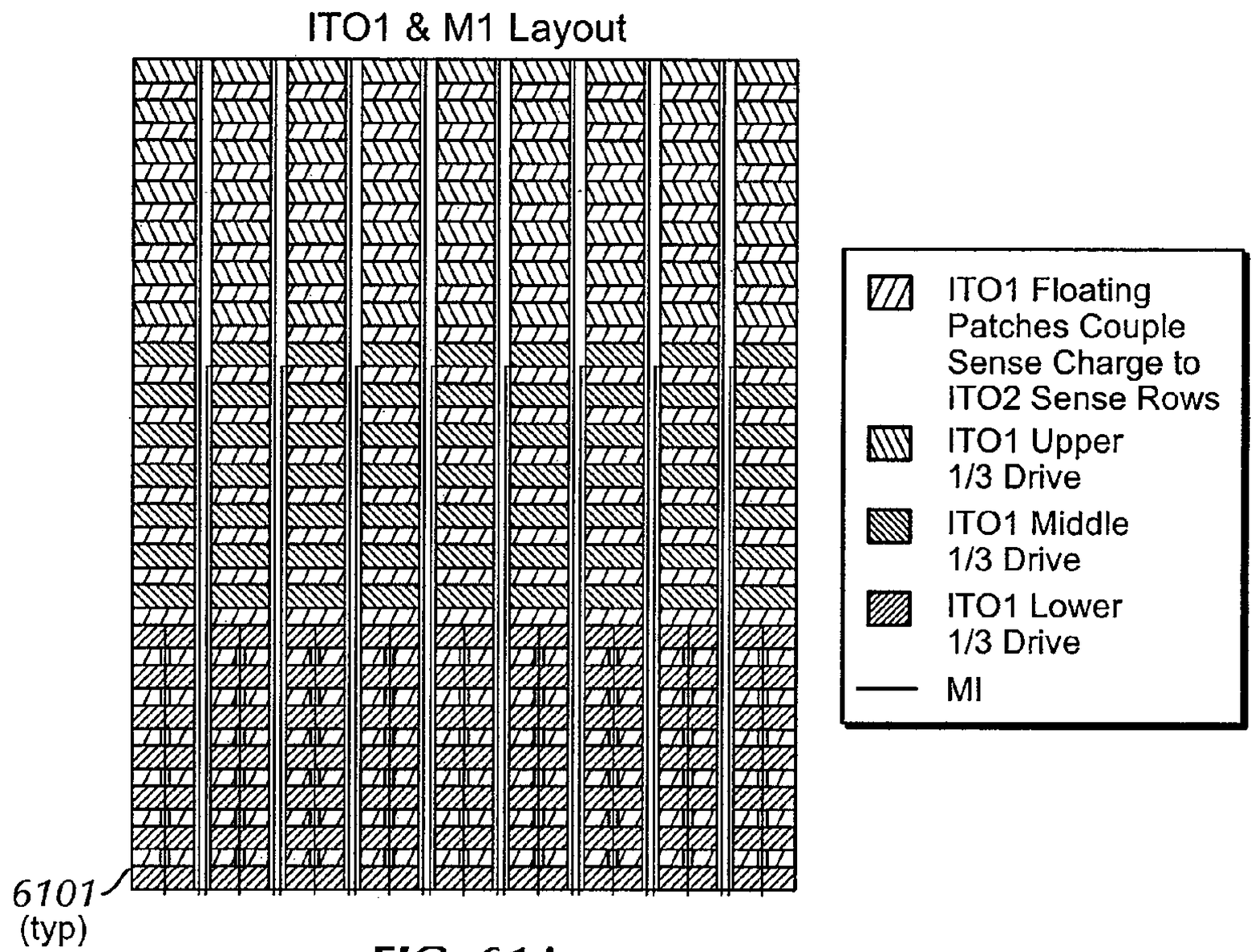

FIG. 61A

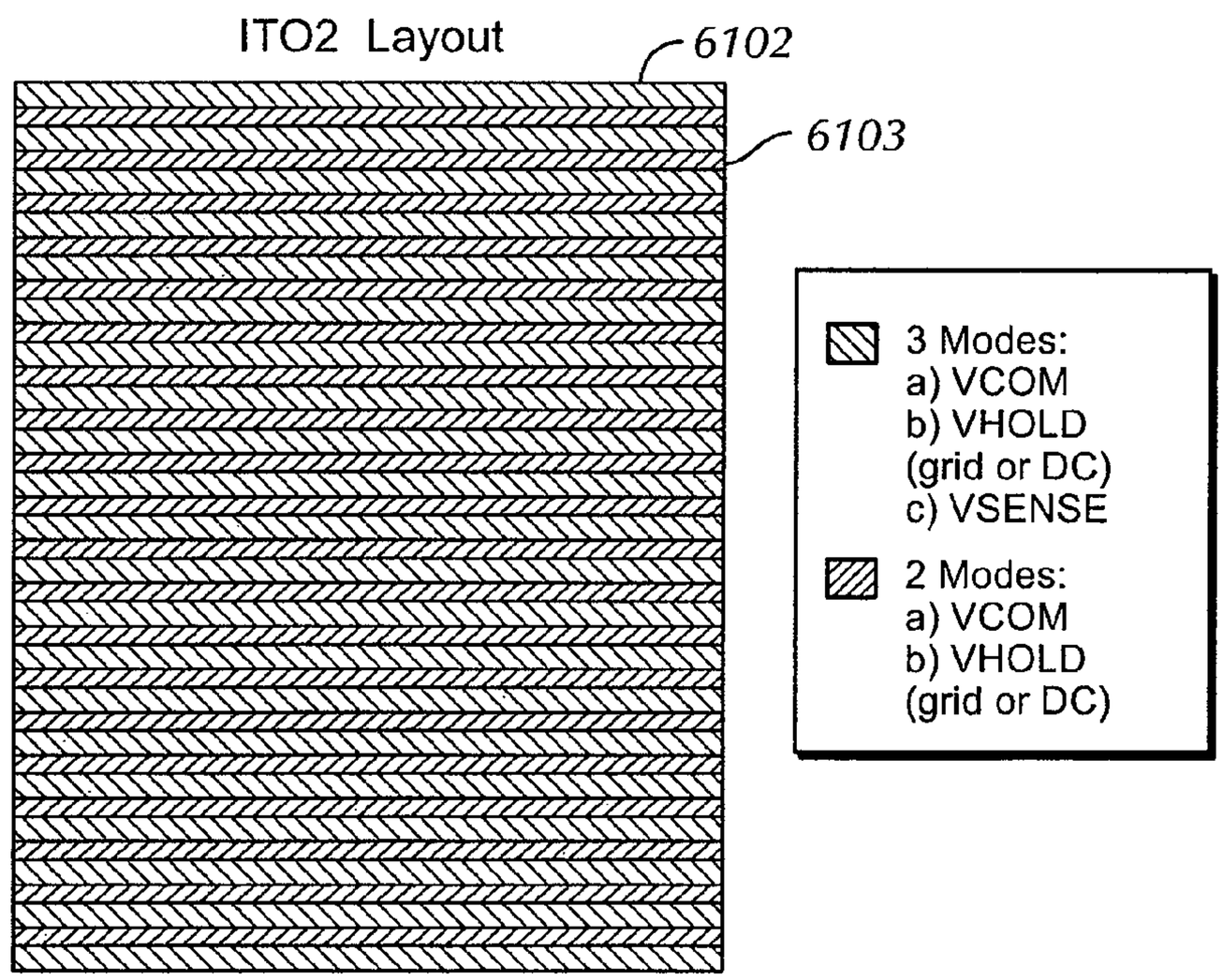

FIG. 61B

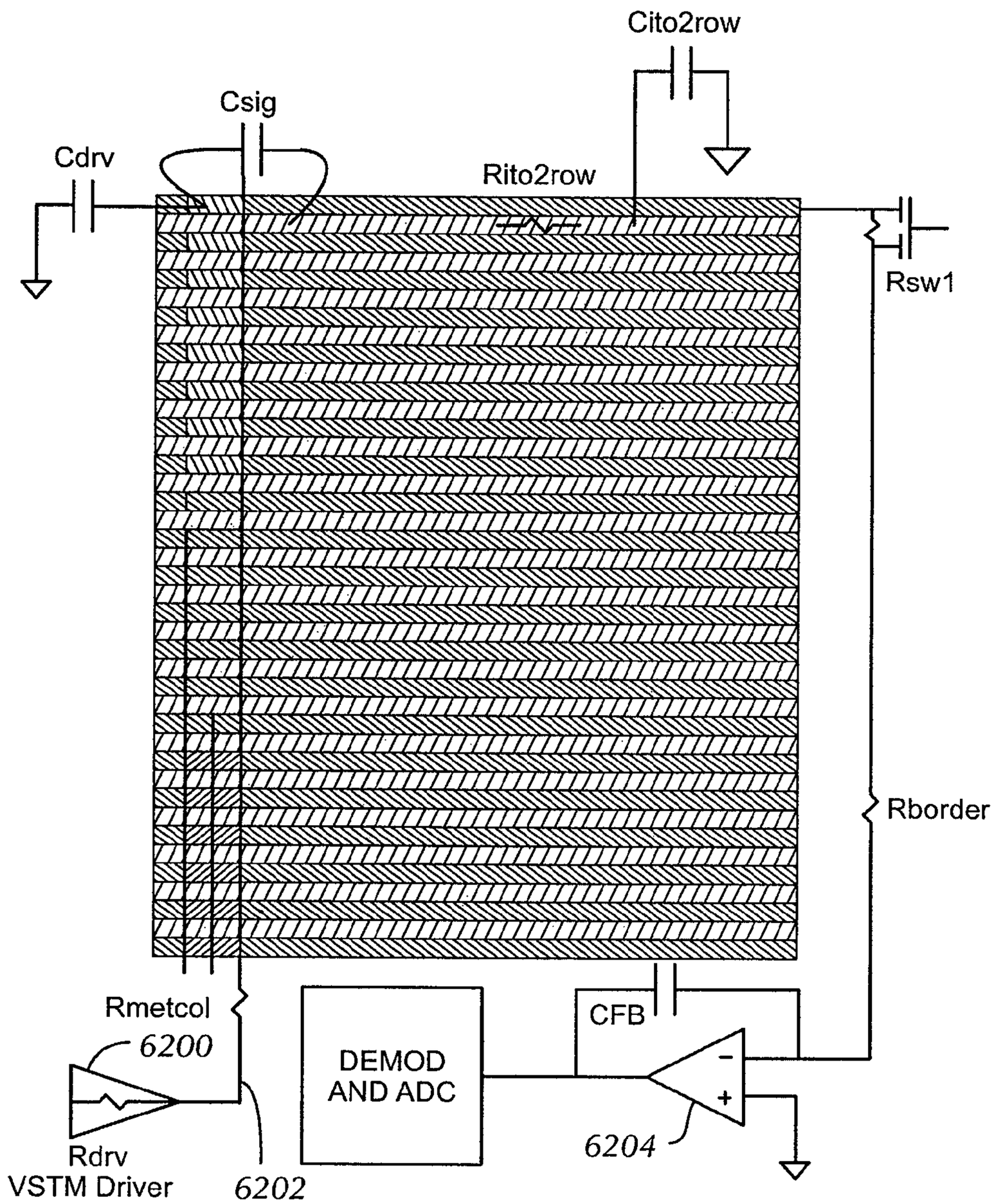
Cito2row
Csig
Cdrv
Rito2row
Rsw1
Rborder
Rmetcol
6200
DEMOD
AND ADC
CFB
Rdrv
VSTM Driver
6202
6204

FIG. 62

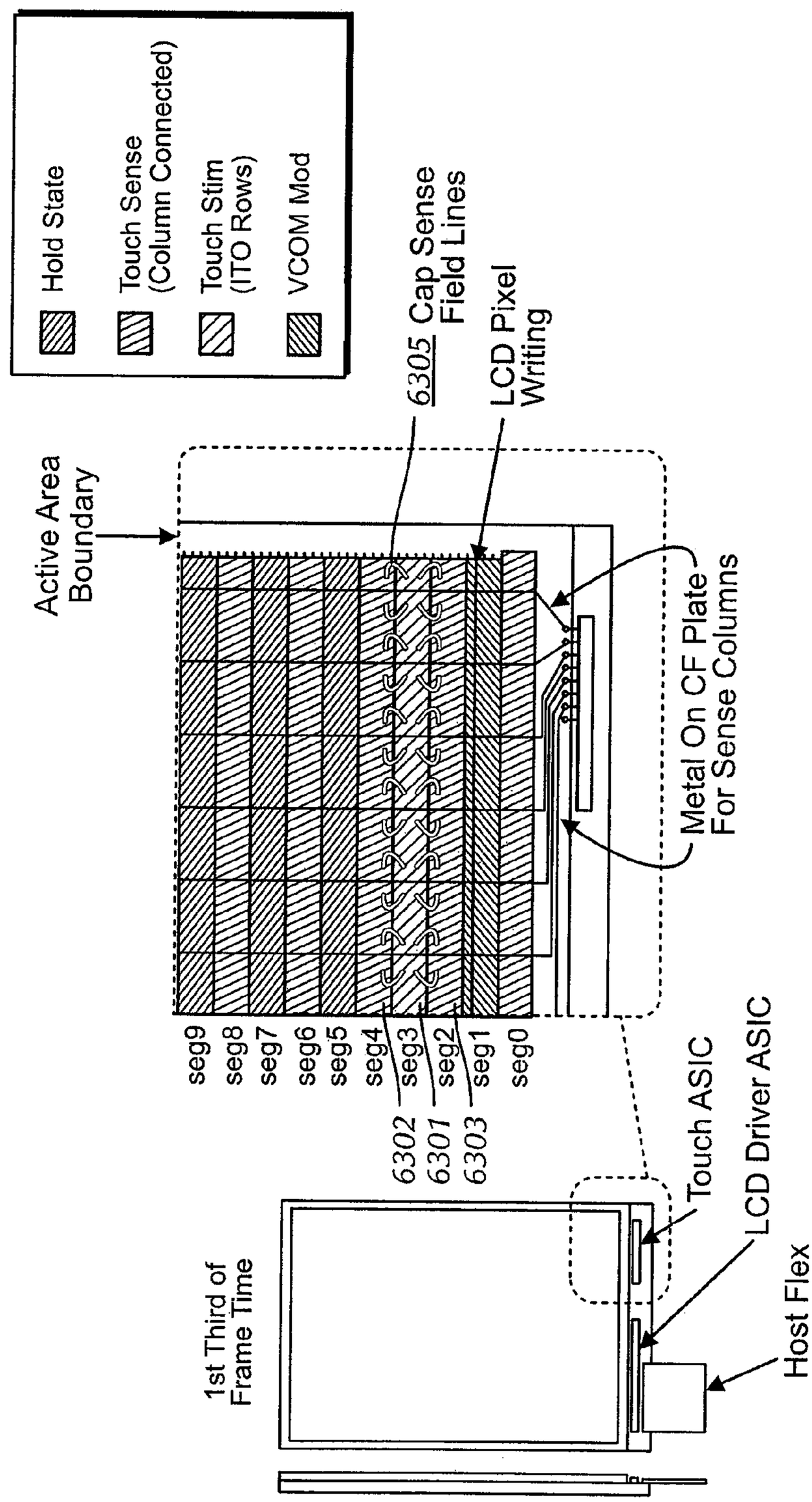
Hold State
Touch Sense (Column Connected)
Touch Stim (ITO Rows)
VCOM Mod
6305 Cap Sense Field Lines
LCD Pixel Writing
Active Area Boundary
Metal On CF Plate For Sense Columns
seg9
seg8
seg7
seg6
seg5
seg4
seg3
seg2
seg1
seg0
6302
6301
6303
Touch ASIC
LCD Driver ASIC
Host Flex
1st Third of Frame Time

FIG. 63

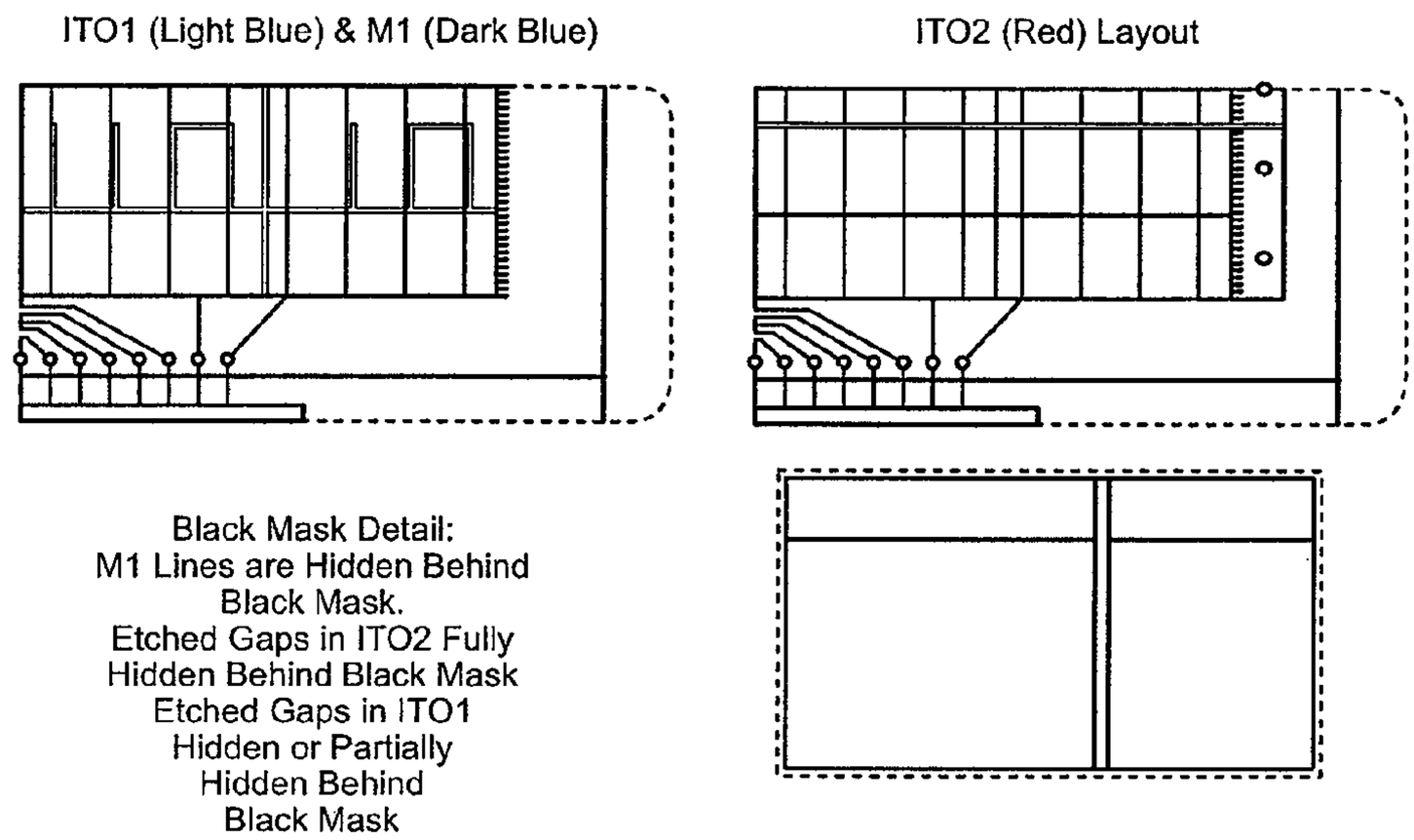
ITO1 (Light Blue) & M1 (Dark Blue)
ITO2 (Red) Layout
Black Mask Detail:
M1 Lines are Hidden Behind
Black Mask.
Etched Gaps in ITO2 Fully
Hidden Behind Black Mask
Etched Gaps in ITO1
Hidden or Partially
Hidden Behind
Black Mask

FIG. 64

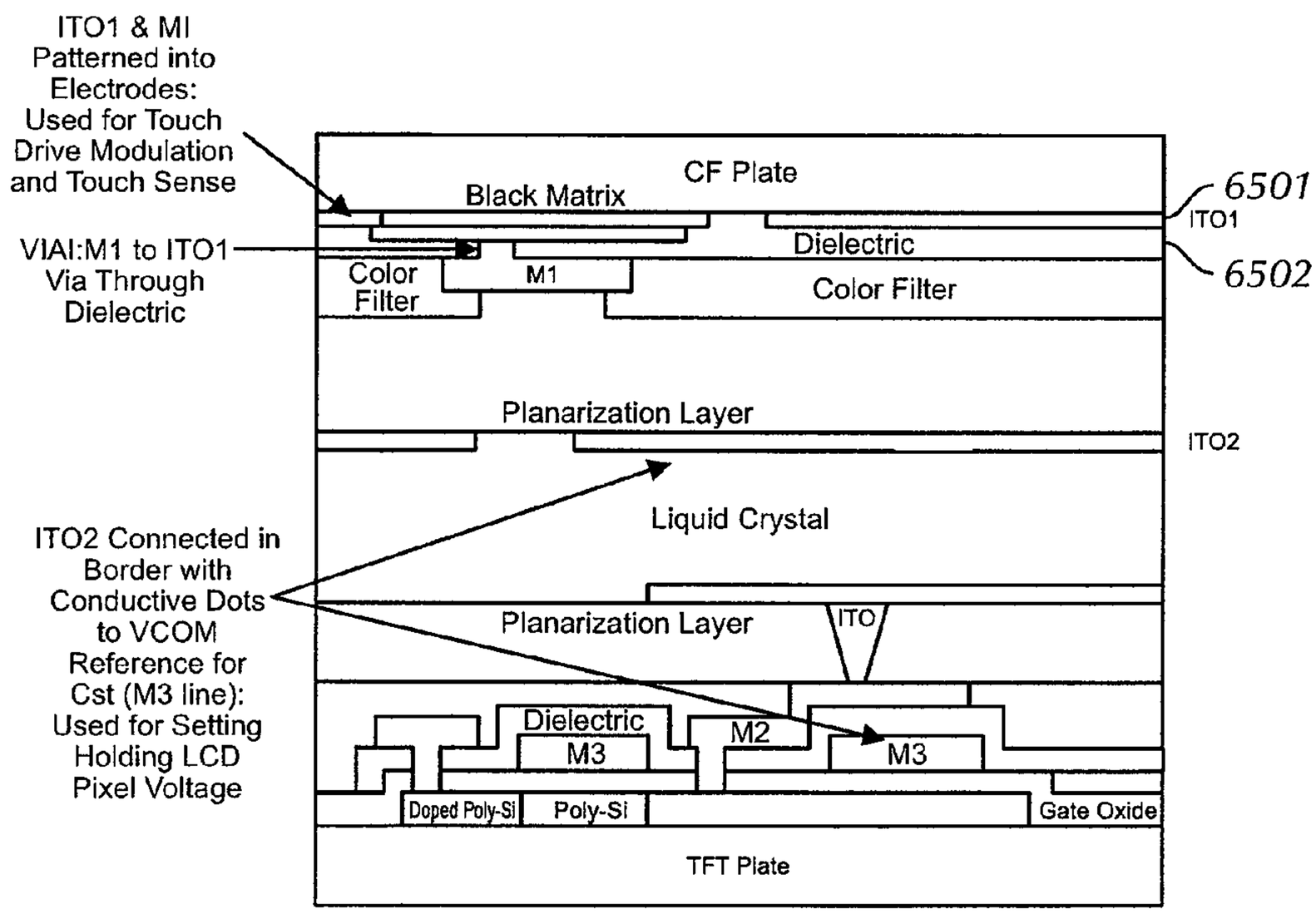
ITO1 & MI
Patterned into
Electrodes:
Used for Touch
Drive Modulation
and Touch Sense
VIAI:M1 to ITO1
Via Through
Dielectric
ITO2 Connected in
Border with
Conductive Dots
to VCOM
Reference for
Cst (M3 line):
Used for Setting
Holding LCD
Pixel Voltage
CF Plate
Black Matrix
Dielectric
Color
Filter
M1
Color Filter
Planarization Layer
Liquid Crystal
Planarization Layer
ITO
Dielectric
M3
M2
M3
Doped Poly-Si
Poly-Si
Gate Oxide
TFT Plate
6501
ITO1
6502
ITO2

FIG. 65

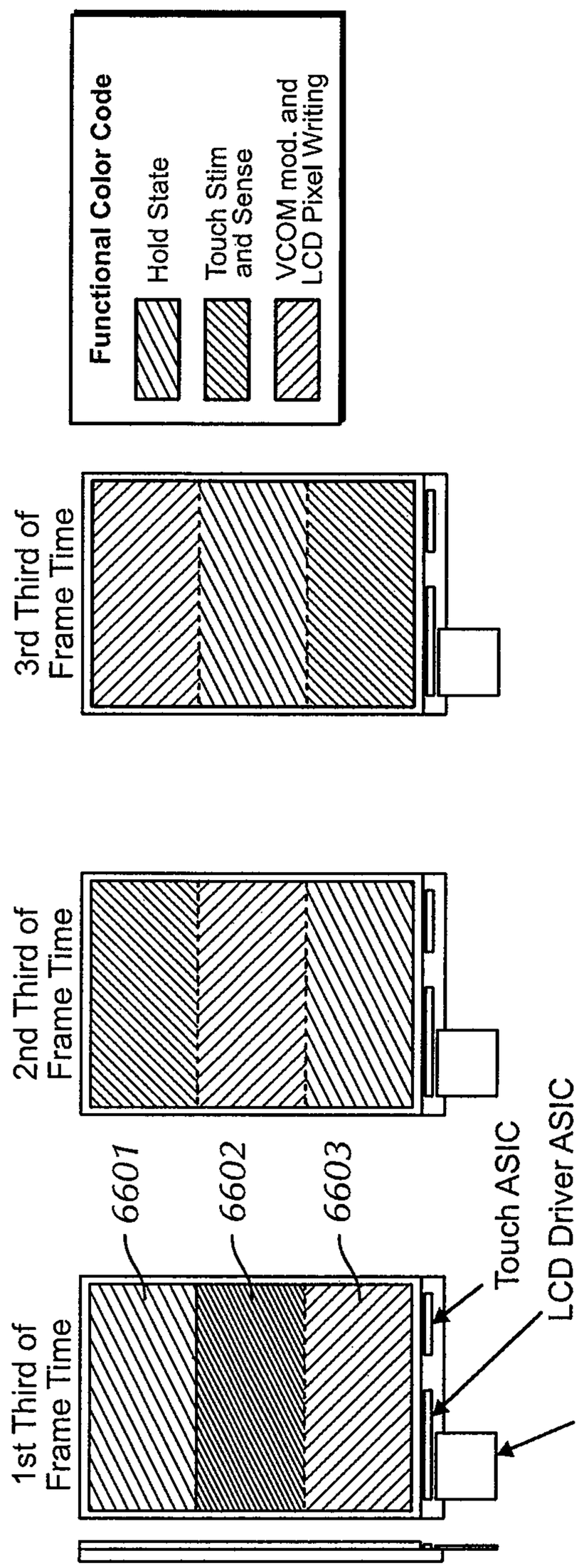
Functional Color Code
Hold State
Touch Stim and Sense
VCOM mod. and LCD Pixel Writing
3rd Third of Frame Time
2nd Third of Frame Time
1st Third of Frame Time
6601
6602
6603
Touch ASIC
LCD Driver ASIC
Host Flex

FIG. 66

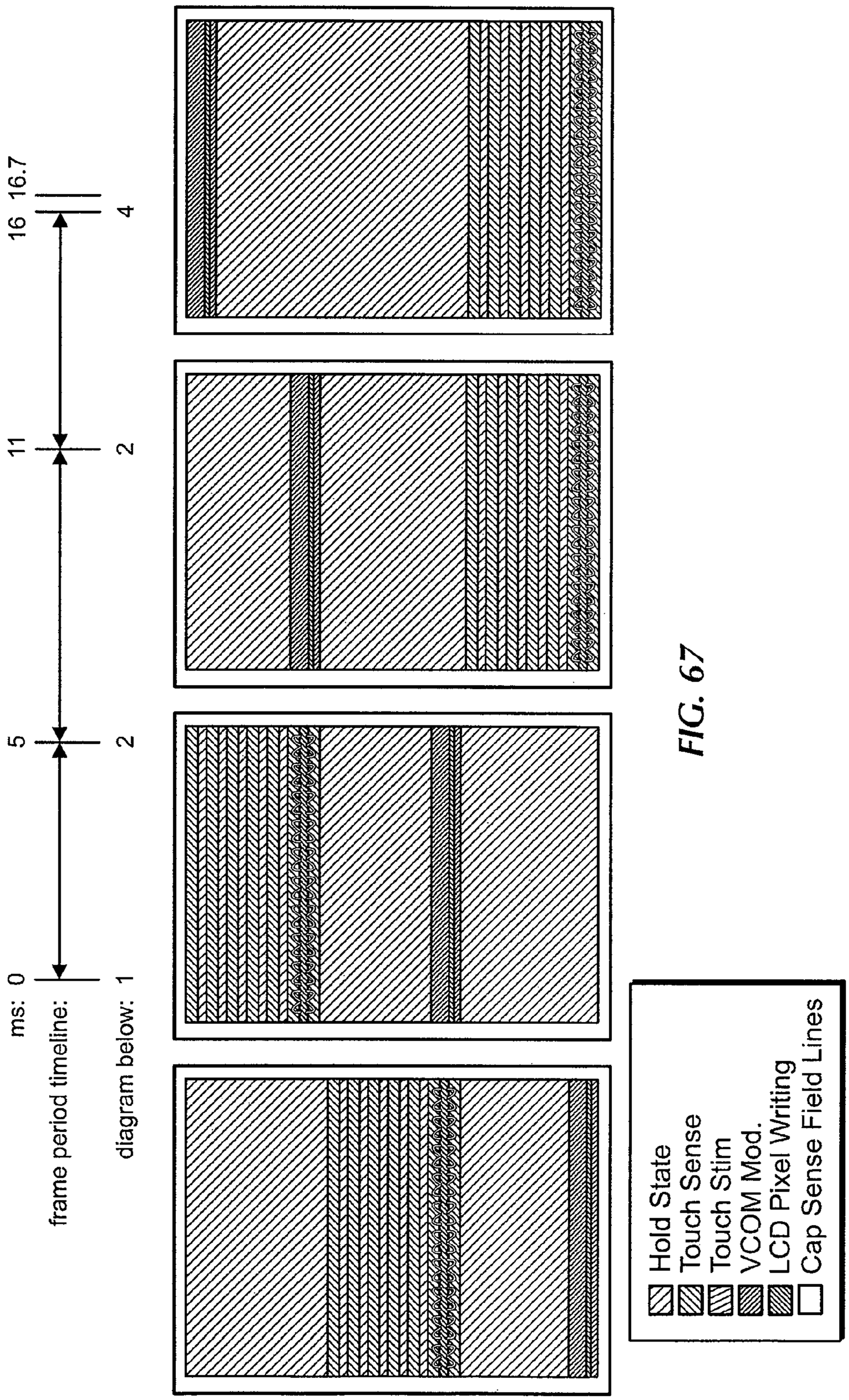
ms: 0
5
11
16
16.7
4
2
2
frame period timeline:
diagram below: 1
Hold State
Touch Sense
Touch Stim
VCOM Mod.
LCD Pixel Writing
Cap Sense Field Lines

FIG. 67

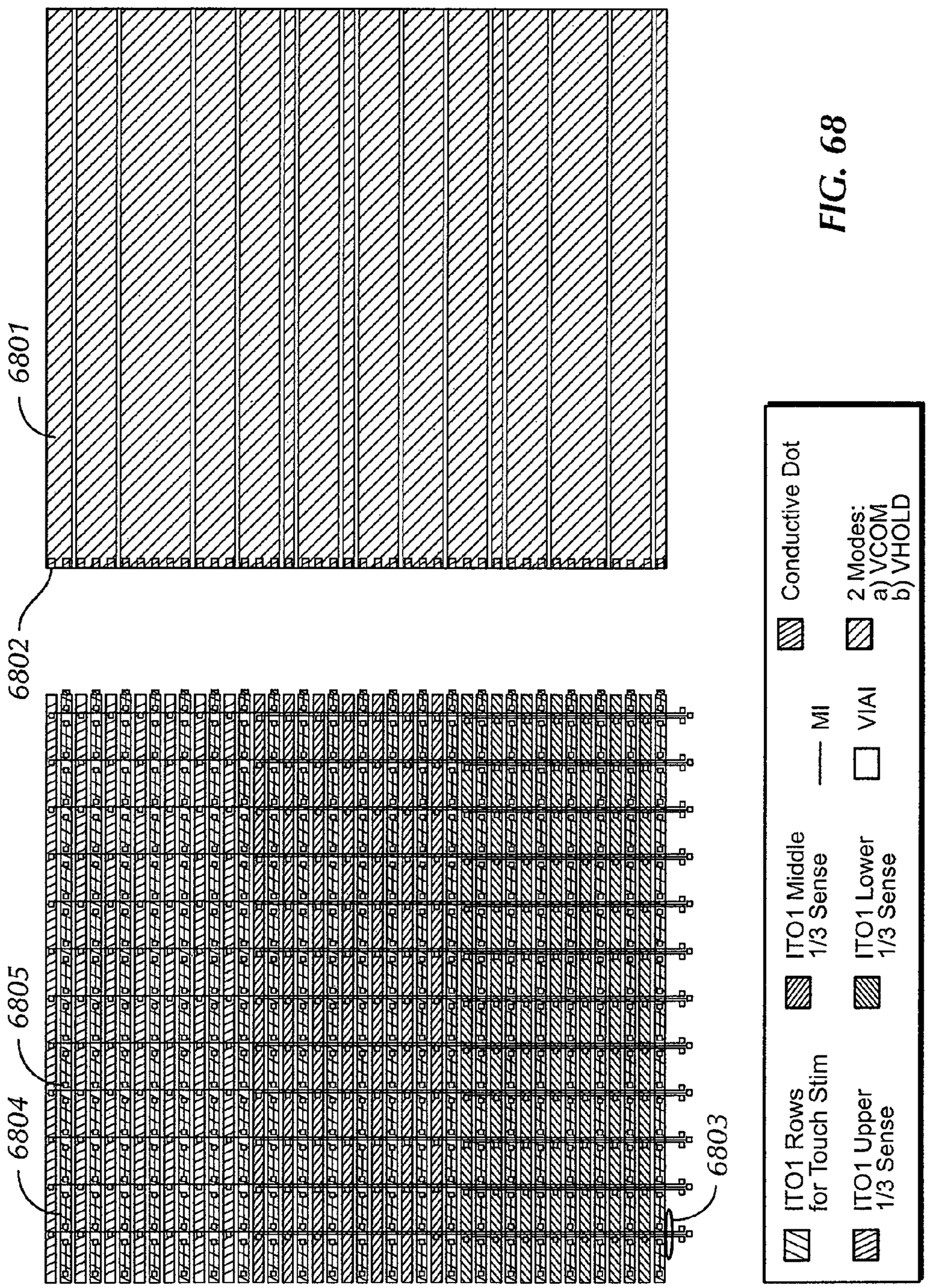
6801
6802
6803
6804
6805
Conductive Dot
2 Modes:
a) VCOM
b) VHOLD
MI
VIAI
ITO1 Middle
1/3 Sense
ITO1 Lower
1/3 Sense
ITO1 Rows
for Touch Stim
ITO1 Upper
1/3 Sense

FIG. 68

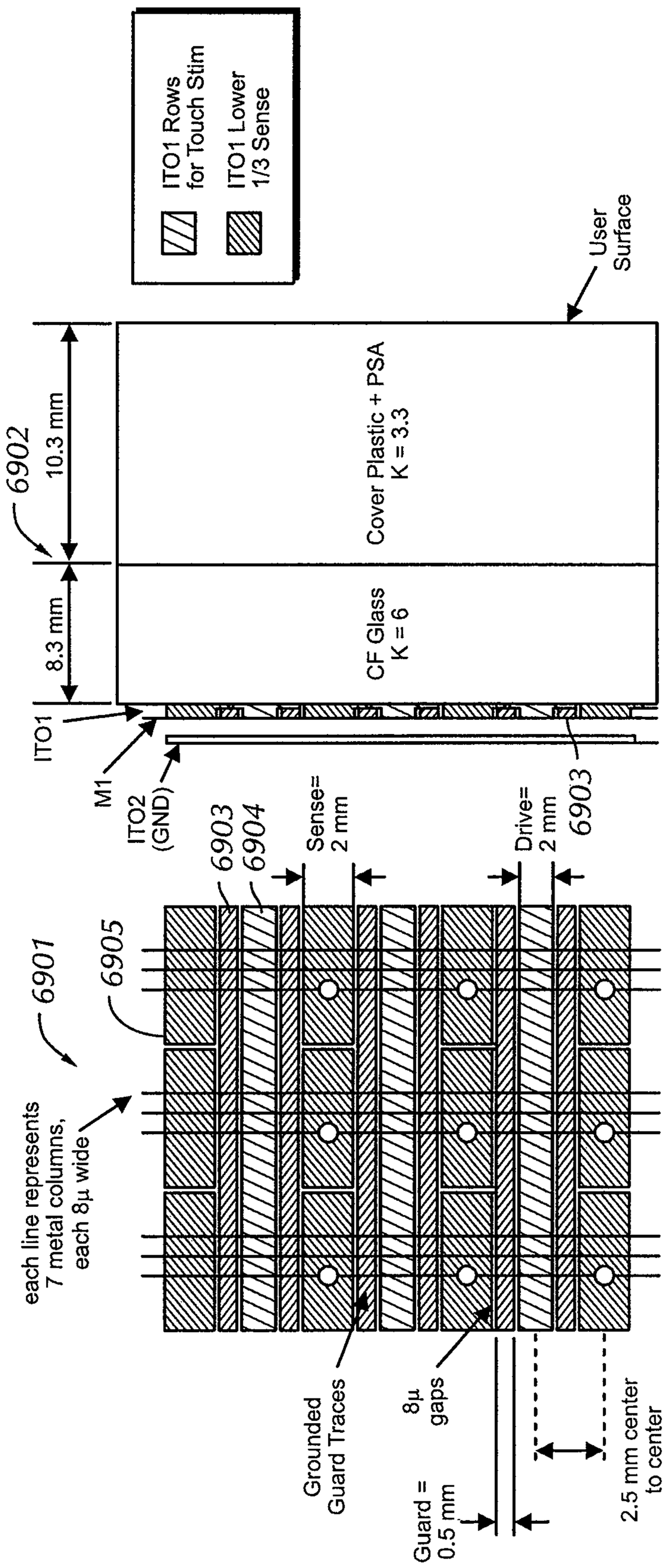
ITO1 Rows for Touch Stim
ITO1 Lower 1/3 Sense
User Surface
6902
10.3 mm
8.3 mm
Cover Plastic + PSA K = 3.3
CF Glass K = 6
ITO1
M1
ITO2 (GND)
6903
6904
Sense= 2 mm
Drive= 2 mm
6903
6901
6905
each line represents 7 metal columns, each 8μ wide
Grounded Guard Traces
8μ gaps
Guard = 0.5 mm
2.5 mm center to center

FIG. 69

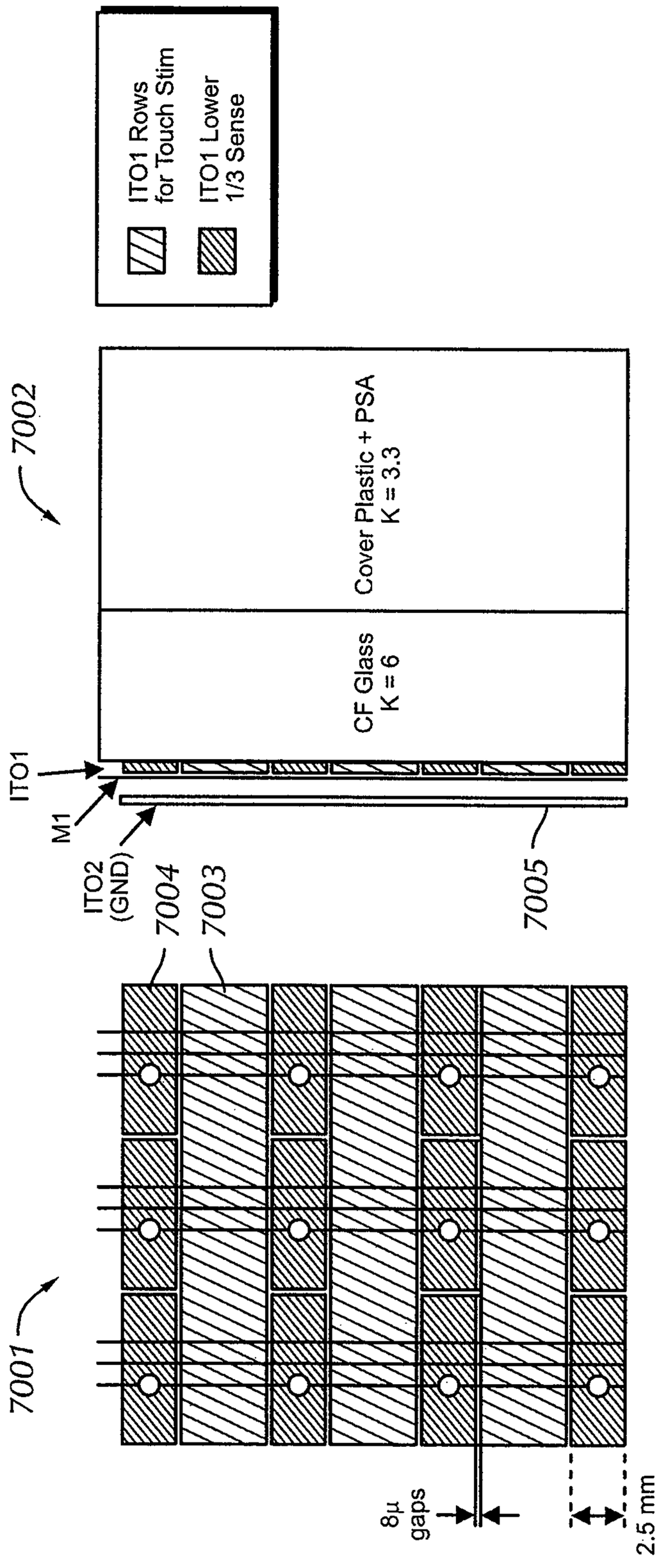
ITO1 Rows for Touch Stim
ITO1 Lower 1/3 Sense
7002
Cover Plastic + PSA K = 3.3
CF Glass K = 6
ITO1
M1
ITO2 (GND)
7004
7003
7005
7001
8μ gaps
2.5 mm

FIG. 70

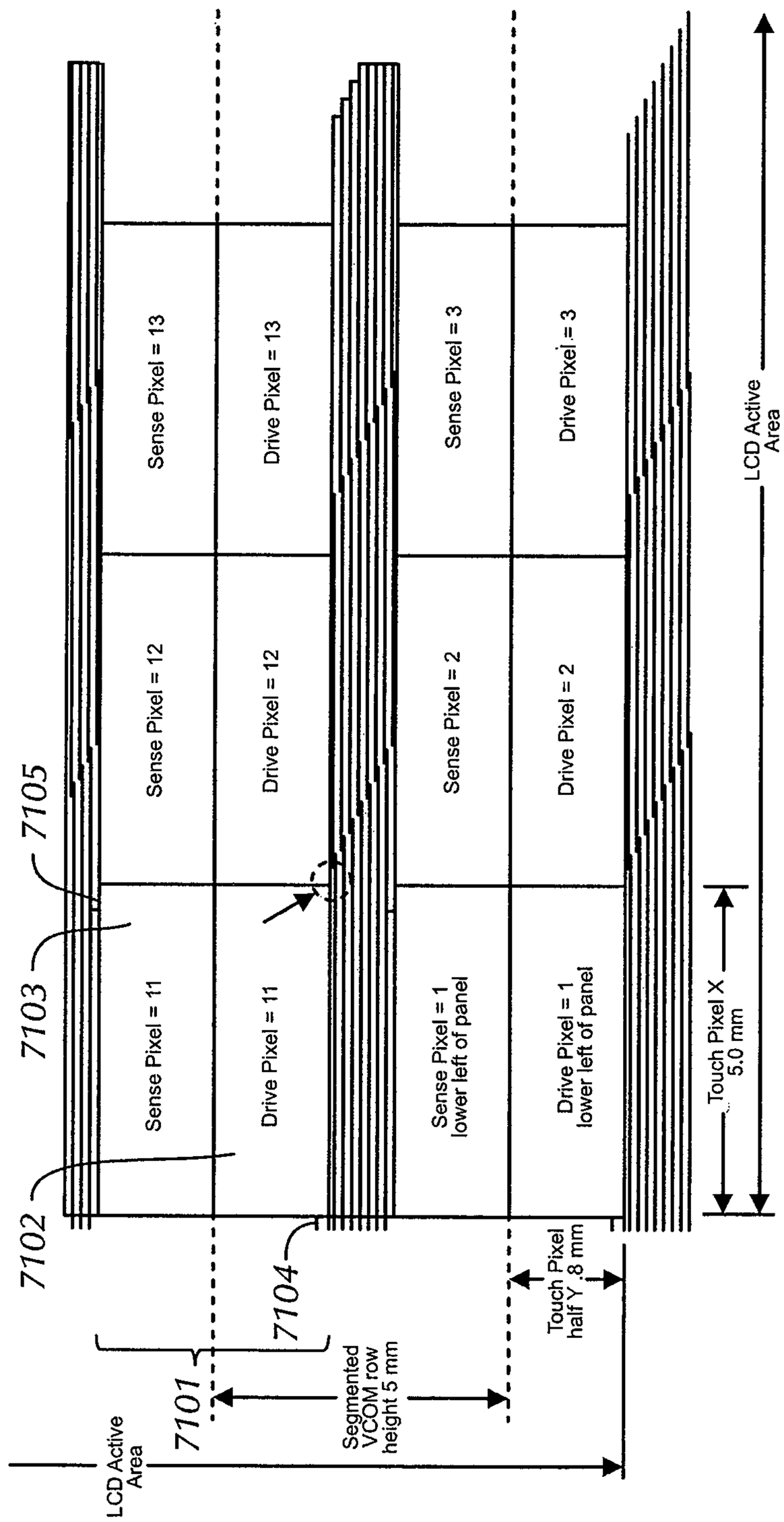
Sense Pixel = 13
Drive Pixel = 13
Sense Pixel = 3
Drive Pixel = 3
Sense Pixel = 12
Drive Pixel = 12
Sense Pixel = 2
Drive Pixel = 2
Sense Pixel = 11
Drive Pixel = 11
Sense Pixel = 1
lower left of panel
Drive Pixel = 1
lower left of panel
7105
7103
7102
7104
7101
LCD Active Area
Segmented VCOM row height 5 mm
Touch Pixel half Y .8 mm
Touch Pixel X 5.0 mm
LCD Active Area

FIG. 71

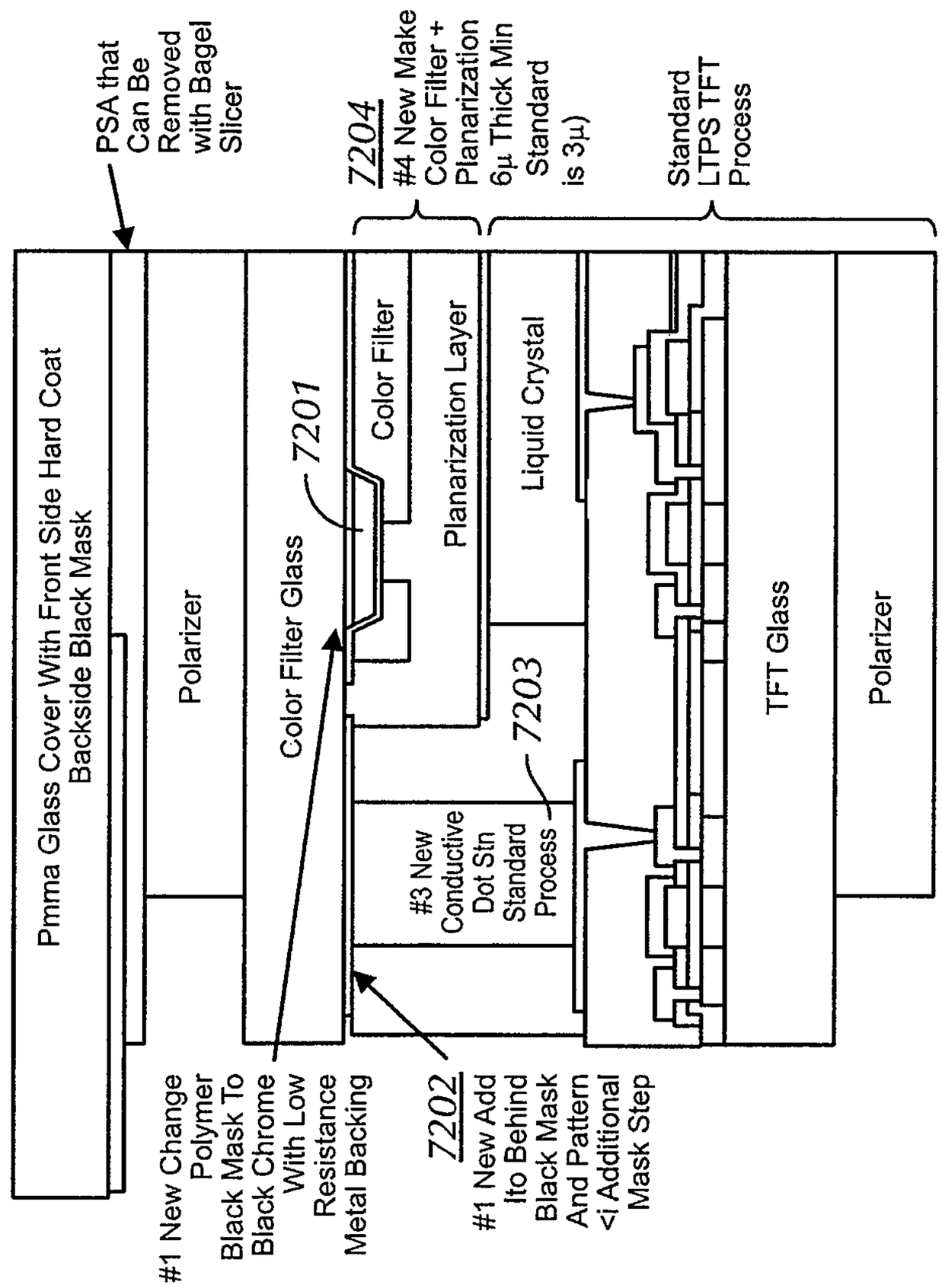
PSA that Can Be Removed with Bagel Slicer
7204
#4 New Make Color Filter + Planarization 6μ Thick Min Standard is 3μ)
Standard LTPS TFT Process
Pmma Glass Cover With Front Side Hard Coat Backside Black Mask
Polarizer
Color Filter Glass
7201
Color Filter
Planarization Layer
Liquid Crystal
7203
#3 New Conductive Dot Stn Standard Process
TFT Glass
Polarizer
#1 New Change Polymer Black Mask To Black Chrome With Low Resistance Metal Backing
7202
#1 New Add Ito Behind Black Mask And Pattern <i Additional Mask Step

FIG. 72

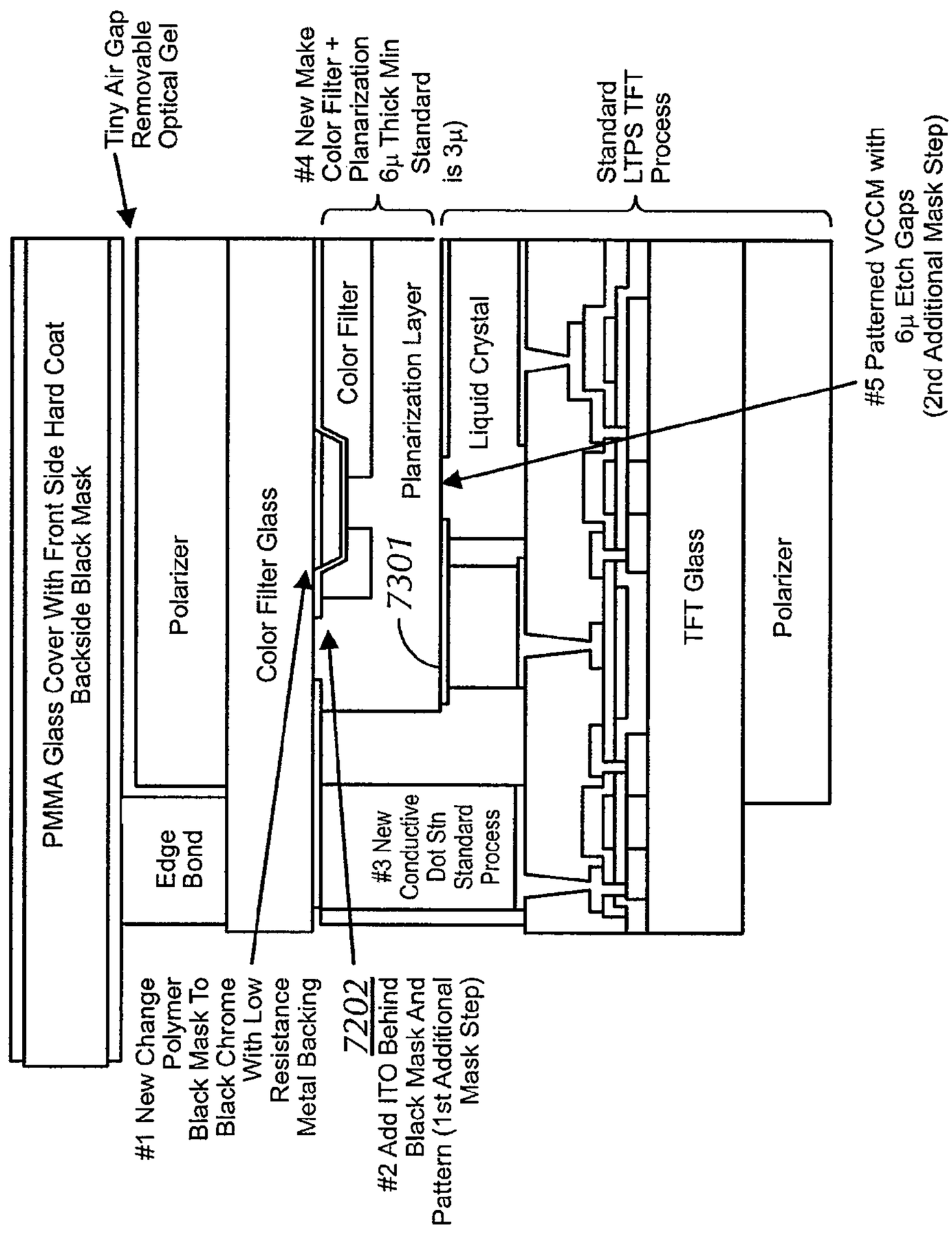
Tiny Air Gap
Removable
Optical Gel
#4 New Make
Color Filter +
Planarization
6μ Thick Min
Standard
is 3μ)
Standard
LTPS TFT
Process
PMMA Glass Cover With Front Side Hard Coat
Backside Black Mask
Polarizer
Color Filter Glass
Color Filter
Planarization Layer
Liquid Crystal
7301
TFT Glass
Polarizer
#5 Patterned VCCM with
6μ Etch Gaps
(2nd Additional Mask Step)
Edge
Bond
#3 New
Conductive
Dot Stn
Standard
Process
#1 New Change
Polymer
Black Mask To
Black Chrome
With Low
Resistance
Metal Backing
7202
#2 Add ITO Behind
Black Mask And
Pattern (1st Additional
Mask Step)

FIG. 73

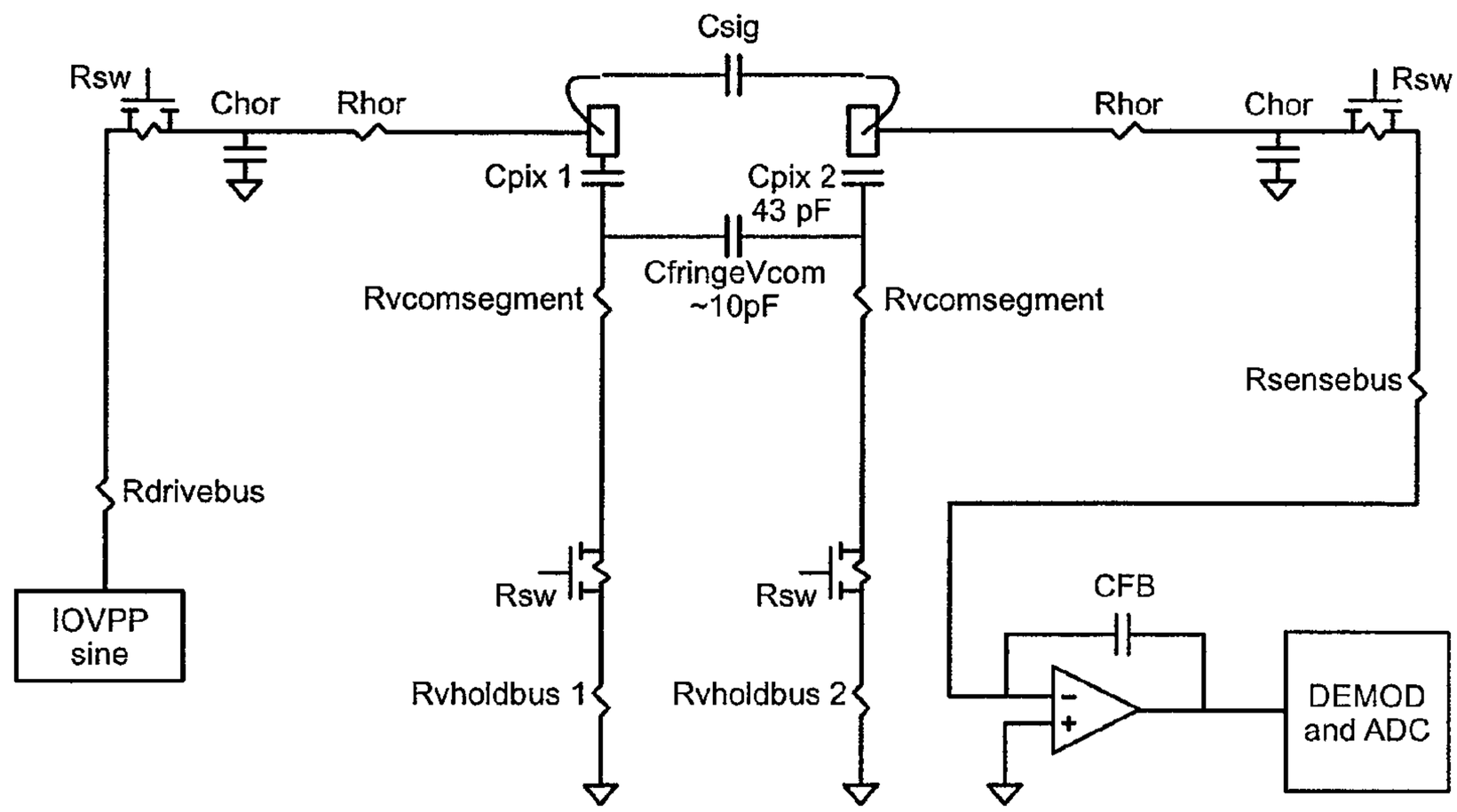
Csig
Rsw
Chor
Rhor
Cpix 1
Cpix 2
43 pF
CfringeVcom
~10pF
Rvcomsegment
Rvcomsegment
Rhor
Chor
Rsw
Rsensebus
Rdrivebus
IOVPP
sine
Rsw
Rsw
CFB
Rvholdbus 1
Rvholdbus 2
DEMOD
and ADC

FIG. 74

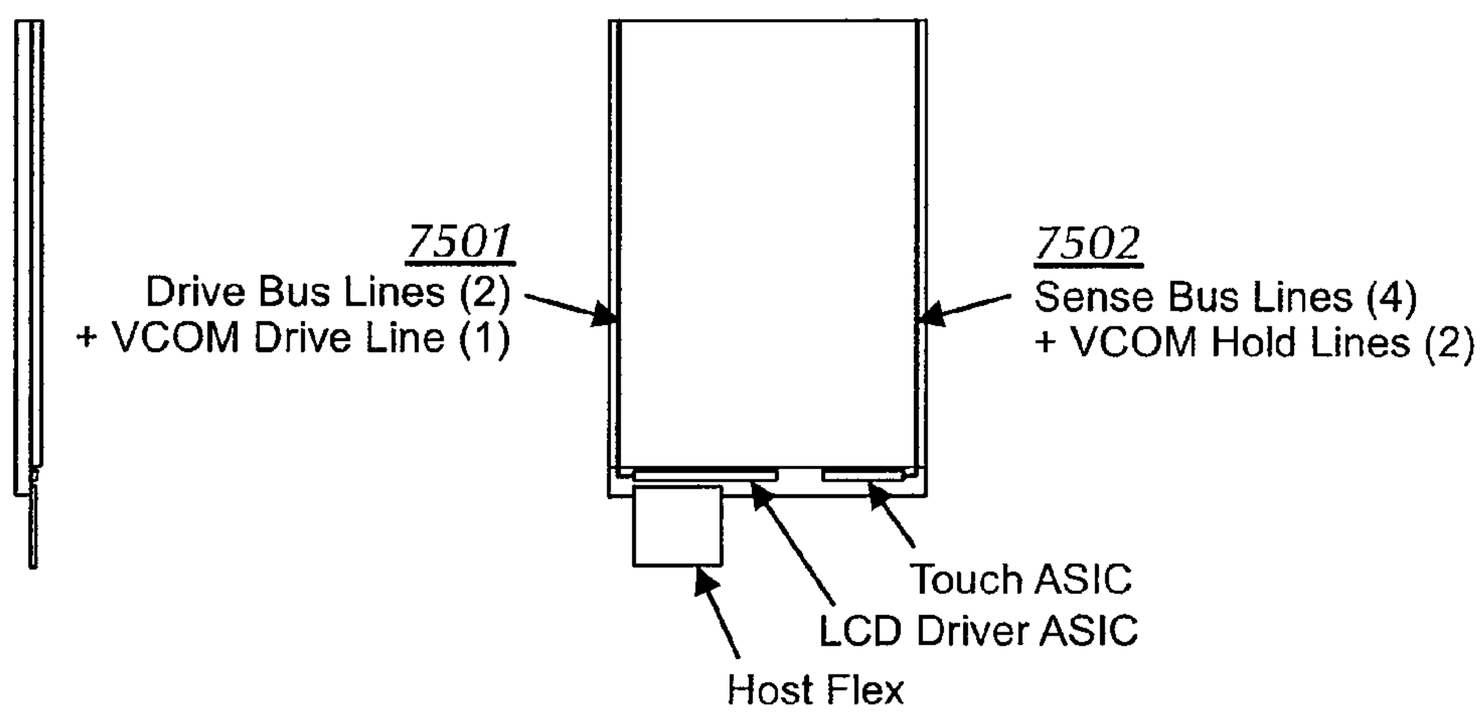
7501
Drive Bus Lines (2)
+ VCOM Drive Line (1)
7502
Sense Bus Lines (4)
+ VCOM Hold Lines (2)
Touch ASIC
LCD Driver ASIC
Host Flex

FIG. 75

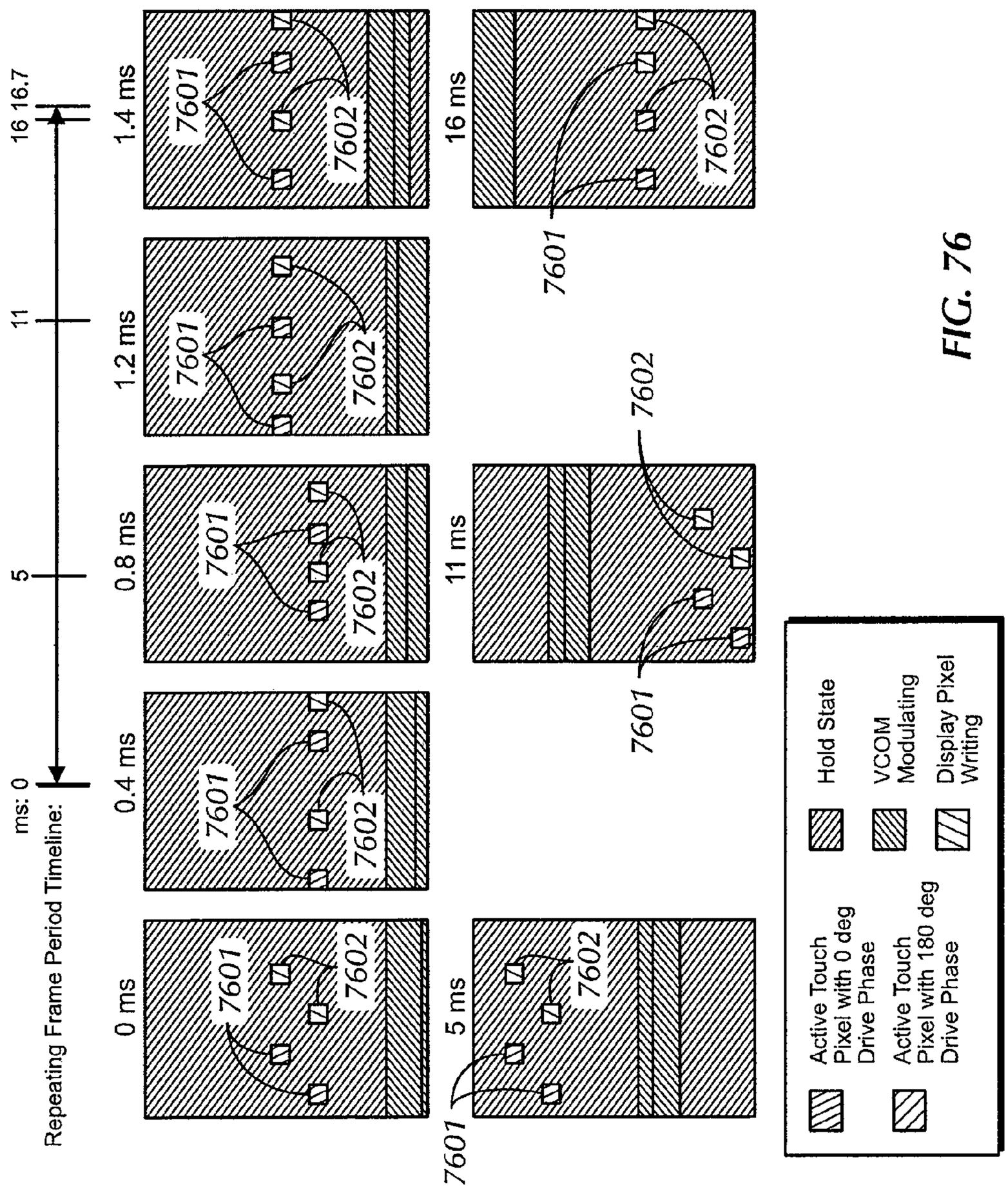
Repeating Frame Period Timeline:
ms: 0
5
11
16 16.7
0 ms
0.4 ms
0.8 ms
1.2 ms
1.4 ms
5 ms
11 ms
16 ms
7601
7602
Hold State
VCOM Modulating
Display Pixel Writing
Active Touch Pixel with 0 deg Drive Phase
Active Touch Pixel with 180 deg Drive Phase

FIG. 76

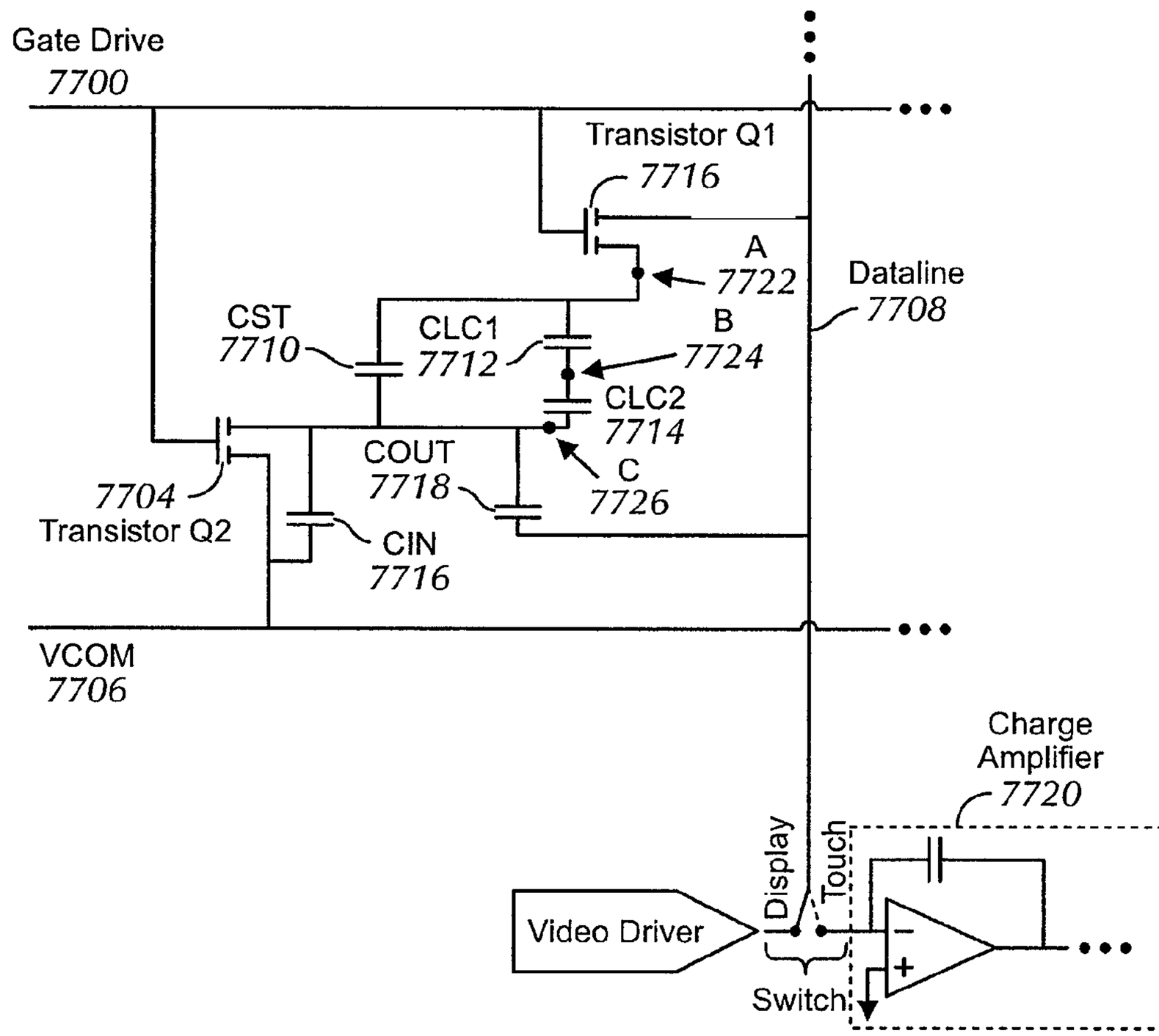
Gate Drive
7700
Transistor Q1
7716
A
7722
Dataline
7708
CST
7710
CLC1
7712
B
7724
CLC2
7714
COUT
7718
C
7726
7704
Transistor Q2
CIN
7716
VCOM
7706
Charge
Amplifier
7720
Display
Touch
Video Driver
Switch

FIG. 77

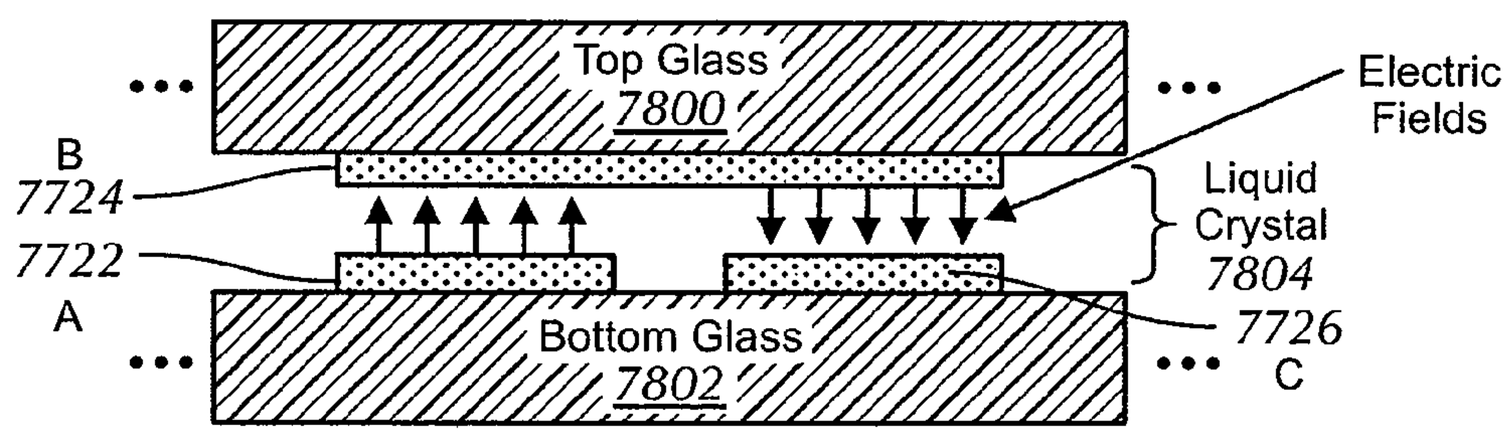
Top Glass
7800
Electric
Fields
B
7724
7722
A
Liquid
Crystal
7804
Bottom Glass
7802
7726
C

FIG. 78

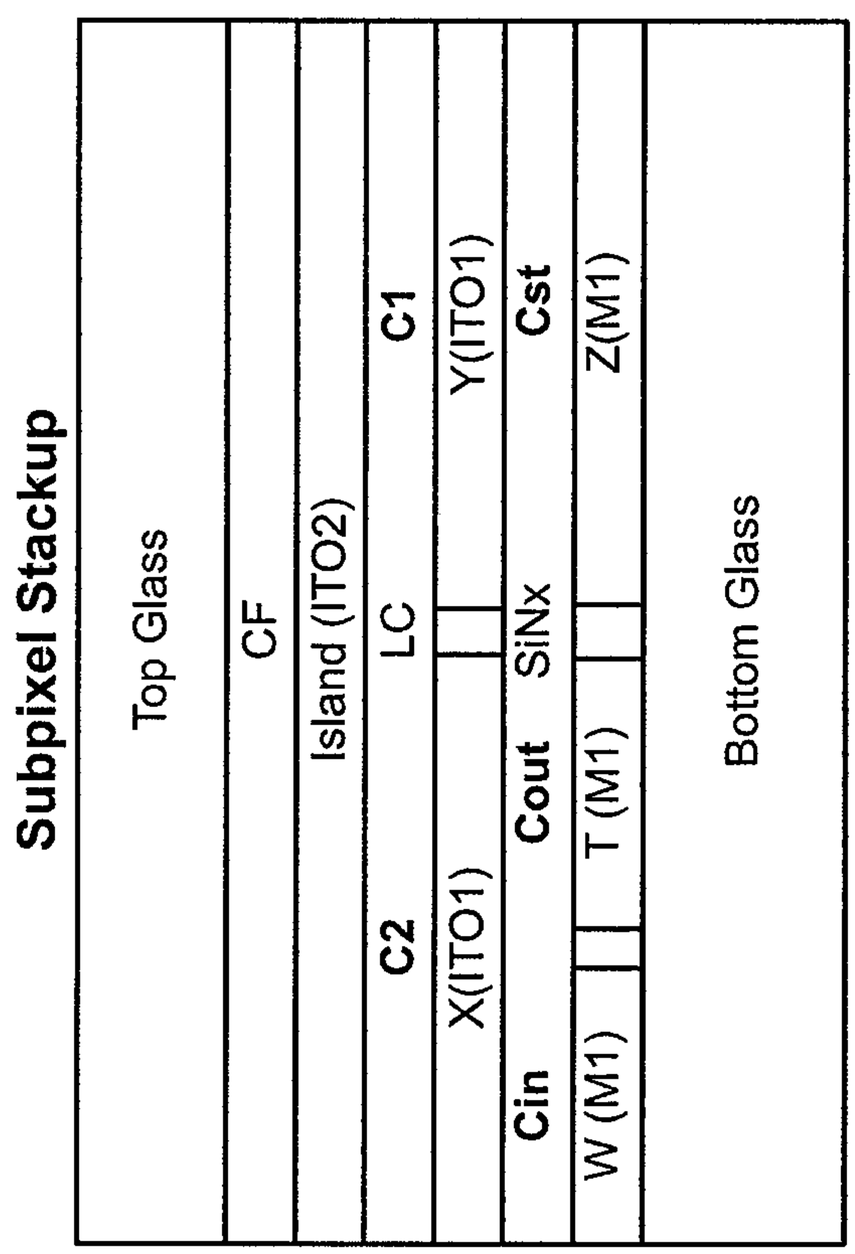
Subpixel Stackup
Top Glass
CF
Island (ITO2)
C2
LC
C1
X(ITO1)
Y(ITO1)
Cin
Cout
SiNx
Cst
W (M1)
T (M1)
Z(M1)
Bottom Glass

FIG. 79

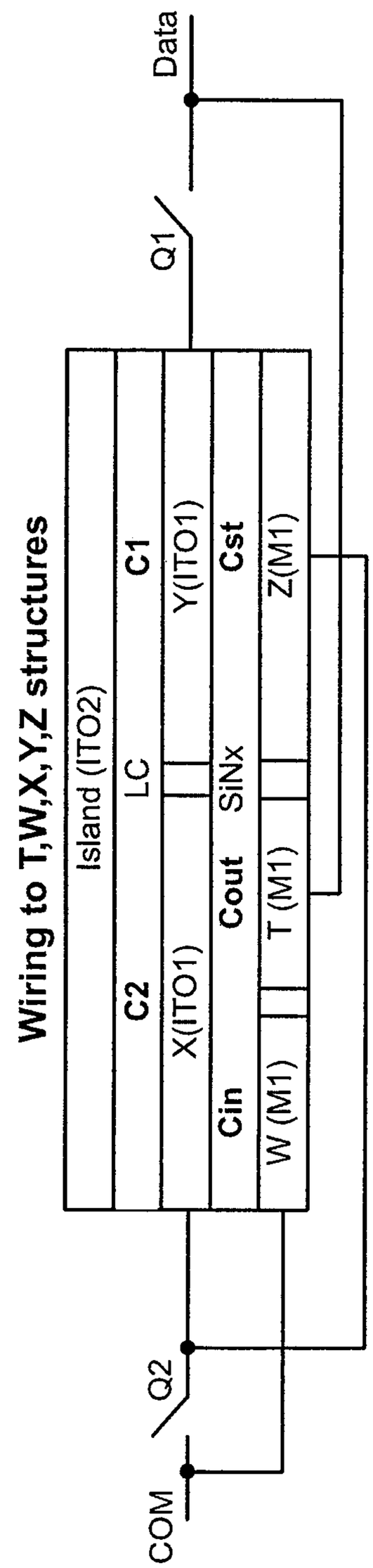
Wiring to T,W,X,Y,Z structures
Data
Q1
Island (ITO2)
C2
LC
C1
X(ITO1)
Y(ITO1)
Cin
Cout
SiNx
Cst
W (M1)
T (M1)
Z(M1)
Q2
COM

FIG. 80

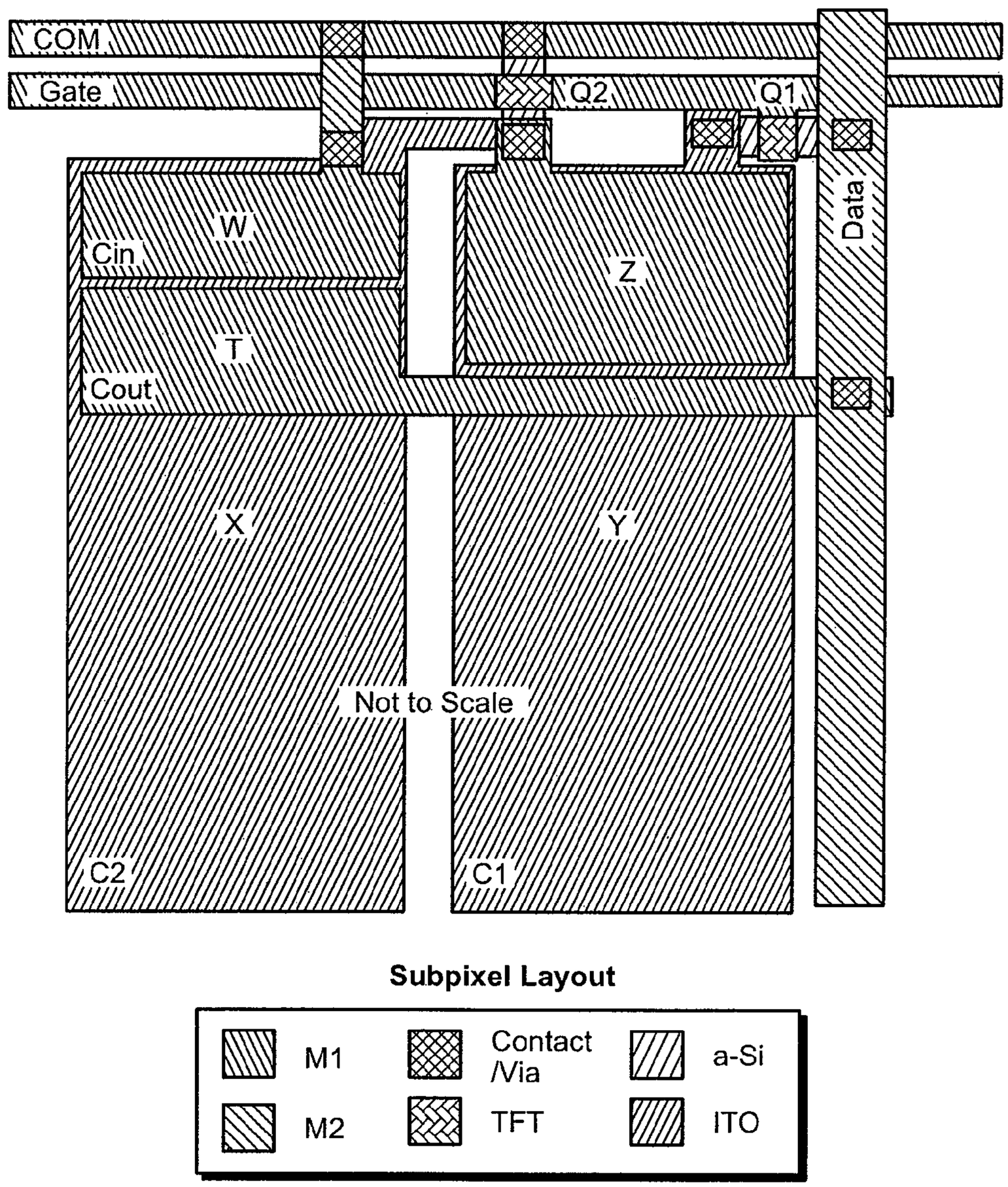
COM
Gate
Q2
Q1
Data
W
Cin
Z
T
Cout
X
Y
Not to Scale
C2
C1
Subpixel Layout
M1
Contact /Via
a-Si
M2
TFT
ITO

FIG. 81

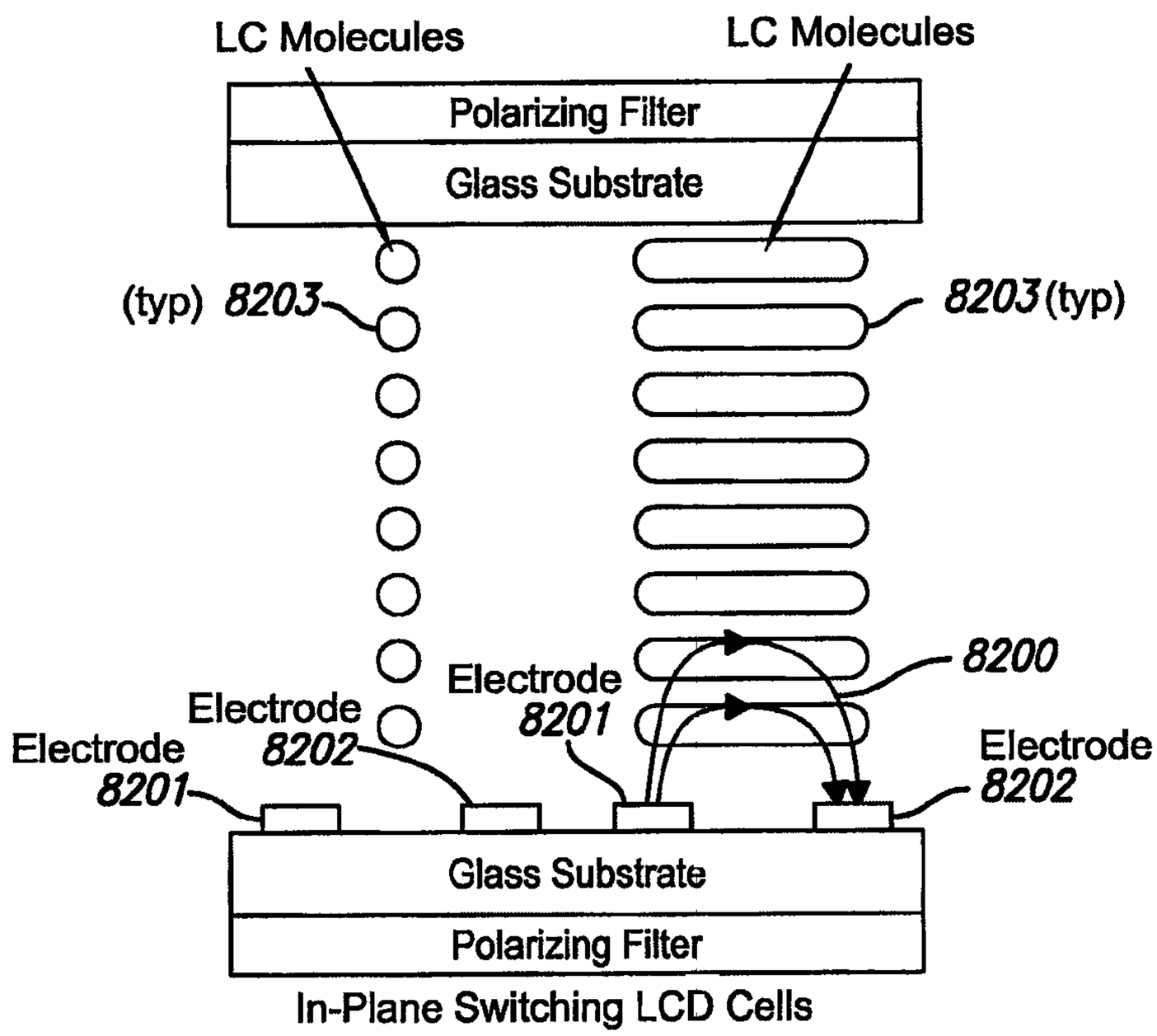
LC Molecules
LC Molecules
Polarizing Filter
Glass Substrate
(typ) 8203
8203 (typ)
8200
Electrode
8201
Electrode
8202
Electrode
8201
Electrode
8202
Glass Substrate
Polarizing Filter
In-Plane Switching LCD Cells

FIG. 82

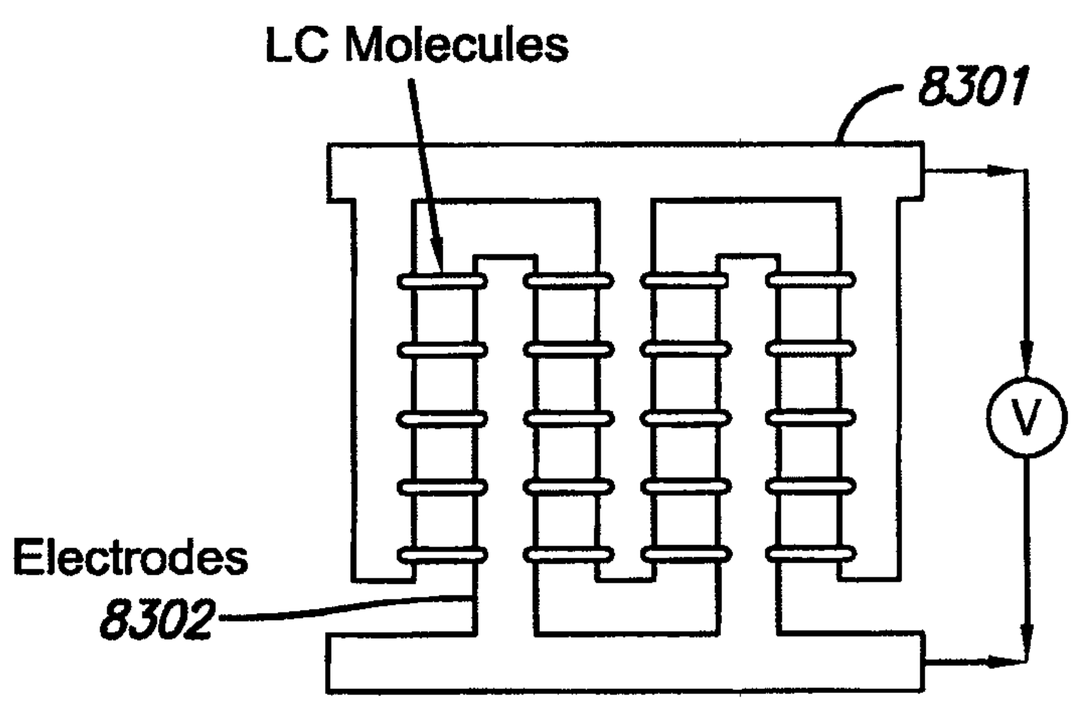
LC Molecules
8301
V
Electrodes
8302

FIG. 83

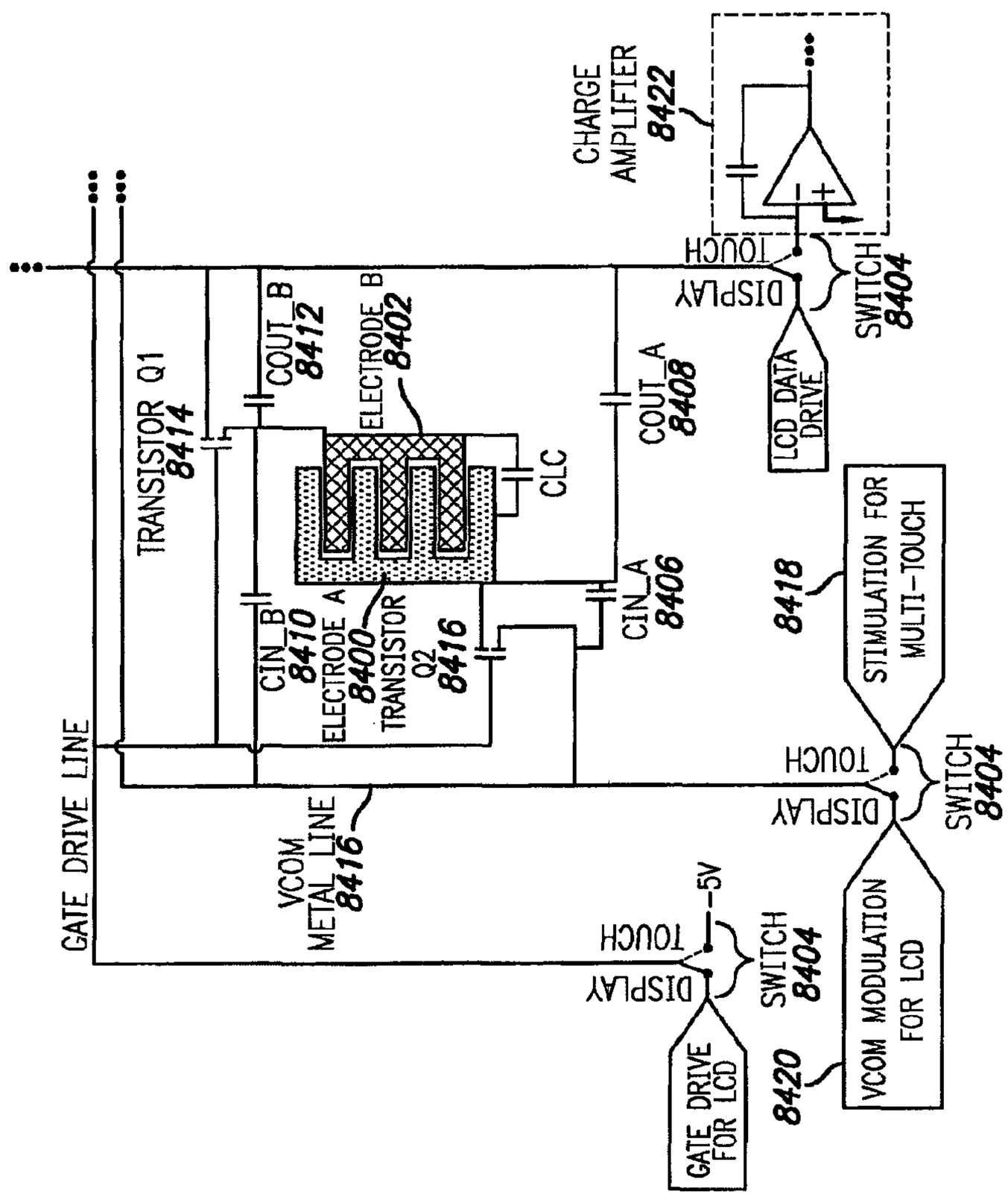
CHARGE AMPLIFIER 8422
TOUCH
DISPLAY
SWITCH 8404
LCD DATA DRIVE
COUT_B 8412
ELECTRODE B 8402
COUT_A 8408
TRANSISTOR Q1 8414
CLC
CIN_A 8406
8418
STIMULATION FOR MULTI-TOUCH
CIN_B 8410
ELECTRODE A 8400
TRANSISTOR Q2 8416
GATE DRIVE LINE
VCOM METAL LINE 8416
-5V
GATE DRIVE FOR LCD
8420
VCOM MODULATION FOR LCD

FIG. 84

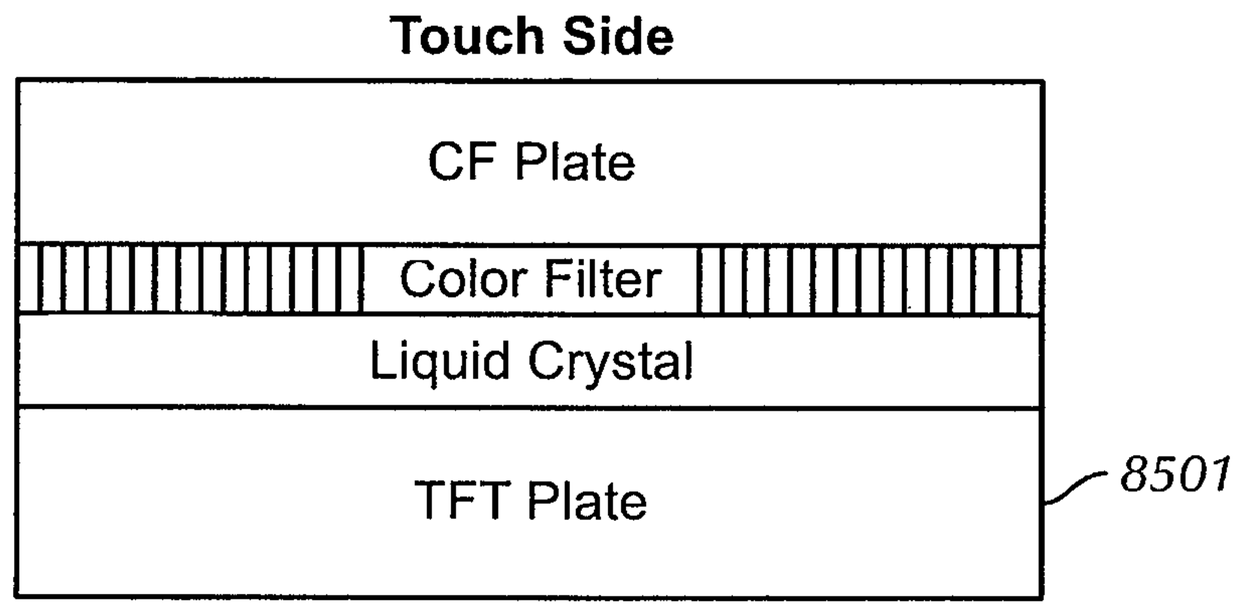
Touch Side
CF Plate
Color Filter
Liquid Crystal
TFT Plate
8501

FIG. 85

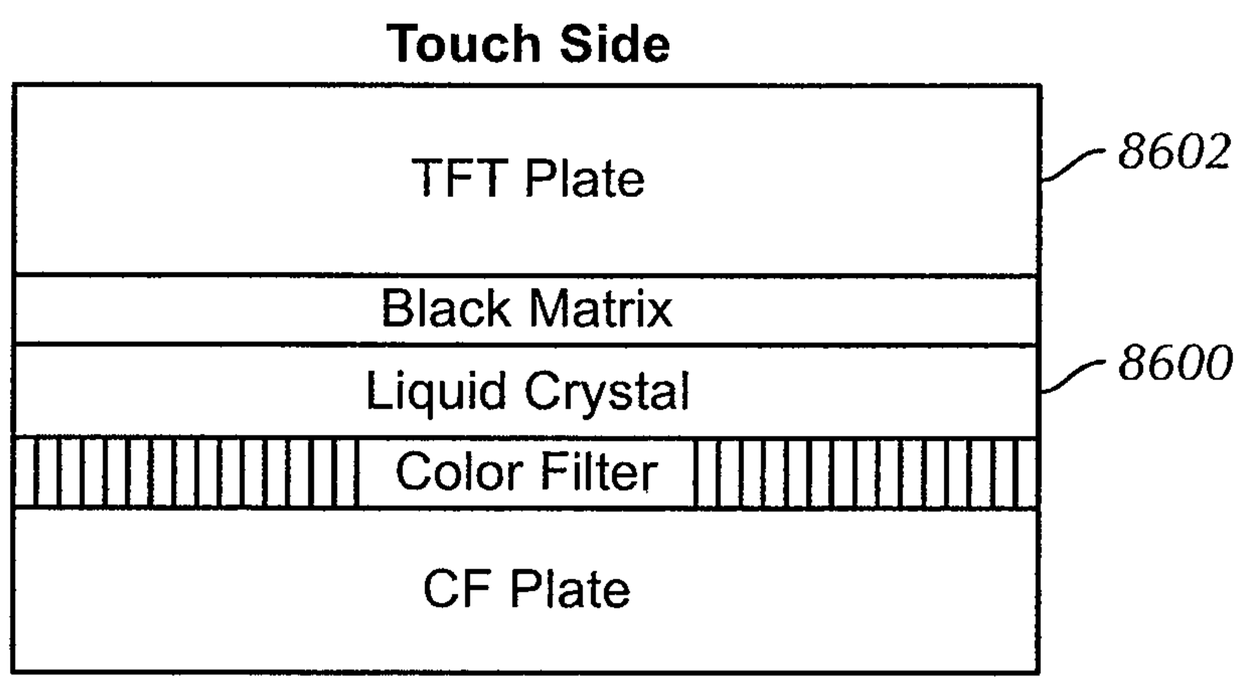
Touch Side
TFT Plate
8602
Black Matrix
Liquid Crystal
8600
Color Filter
CF Plate

FIG. 86

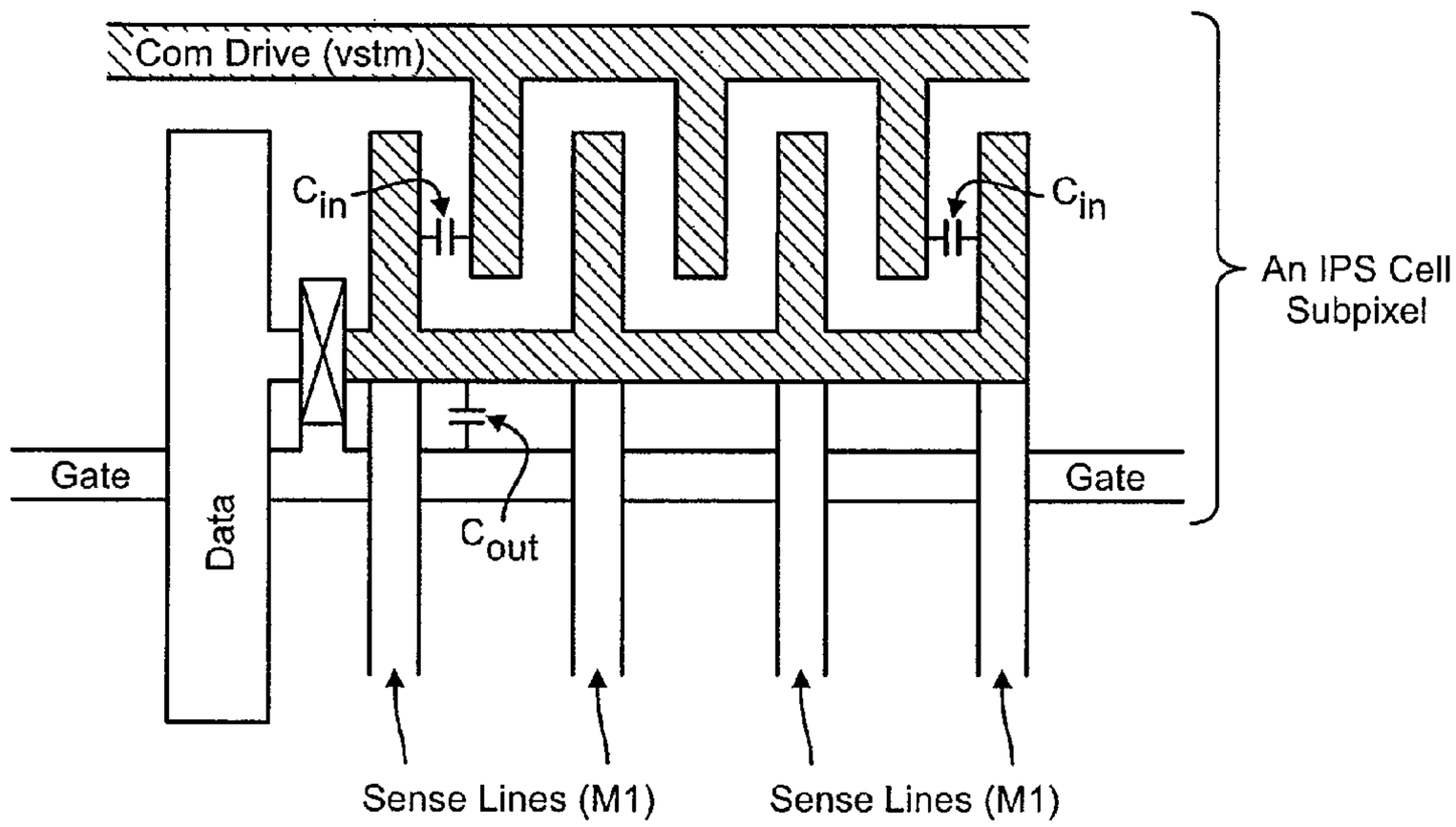
Com Drive (vstm)
C_{in}
C_{in}
An IPS Cell Subpixel
Gate
Gate
Data
C_{out}
Sense Lines (M1)
Sense Lines (M1)

FIG. 87

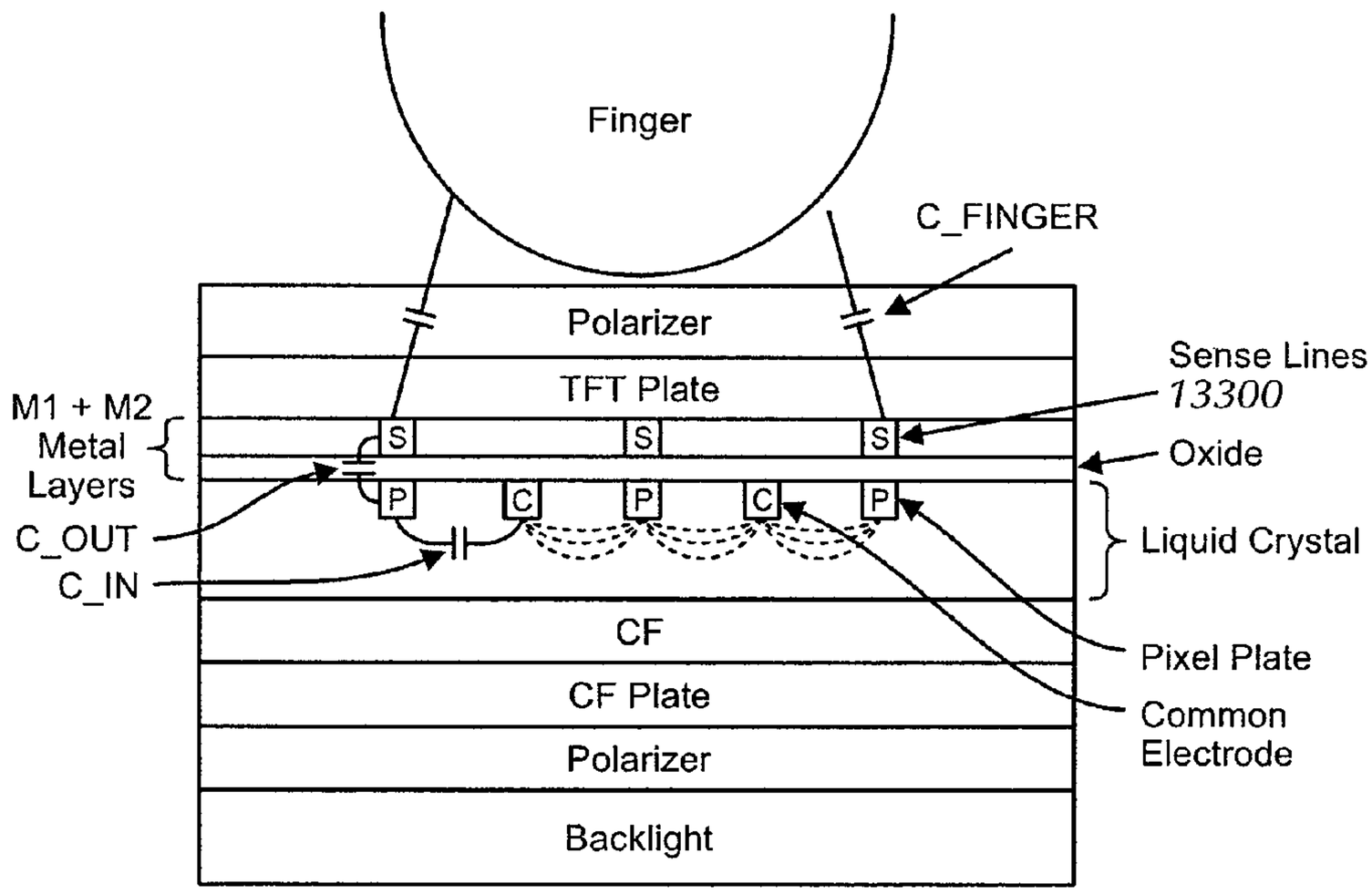
Finger
C_FINGER
Polarizer
TFT Plate
M1 + M2 Metal Layers
S
S
S
Sense Lines 13300
Oxide
P
C
P
C
P
C_OUT
C_IN
Liquid Crystal
CF
Pixel Plate
CF Plate
Common Electrode
Polarizer
Backlight

FIG. 88

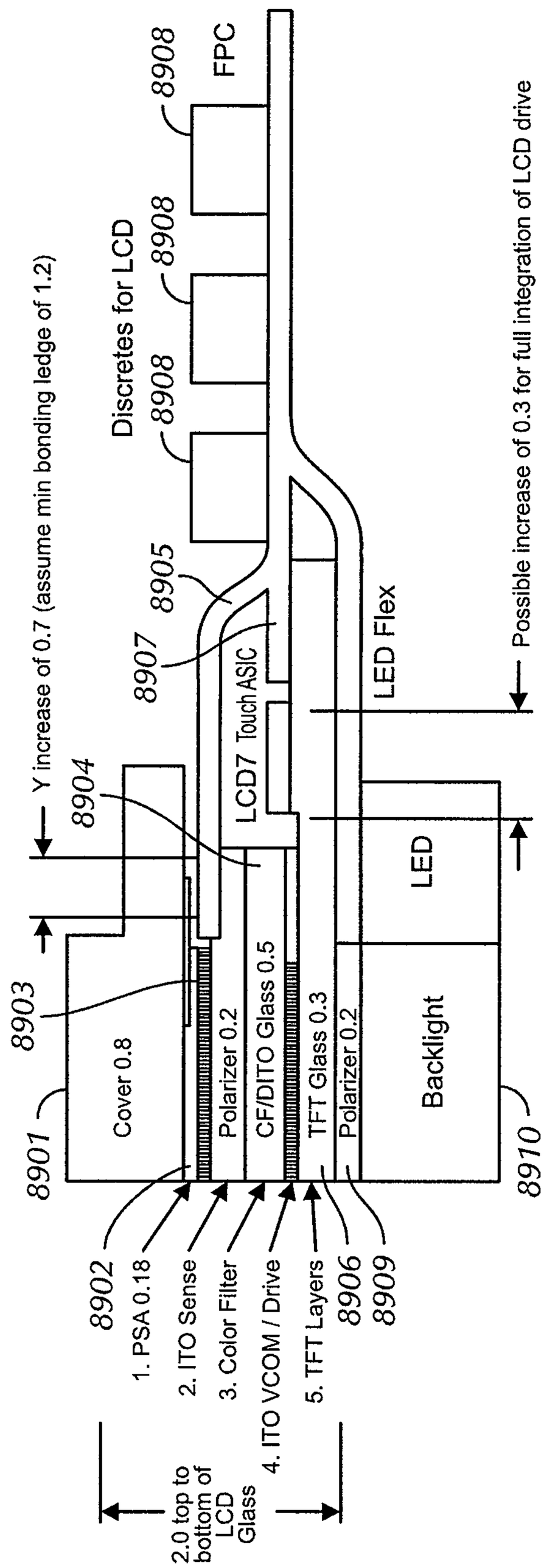
Y increase of 0.7 (assume min bonding ledge of 1.2)
Discretes for LCD
8908
8908
8908
FPC
8905
8907
LCD7 Touch ASIC
LED Flex
Possible increase of 0.3 for full integration of LCD drive
8904
8903
8901
Cover 0.8
Polarizer 0.2
CF/DITO Glass 0.5
TFT Glass 0.3
Polarizer 0.2
LED
Backlight
8910
8902
8906
8909
1. PSA 0.18
2. ITO Sense
3. Color Filter
4. ITO VCOM / Drive
5. TFT Layers
2.0 top to bottom of LCD Glass

FIG. 89

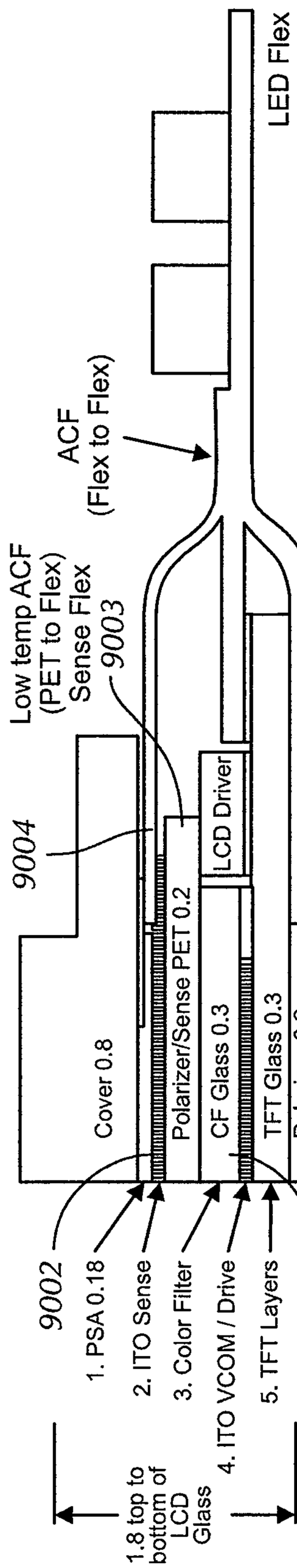
LED Flex
ACF
(Flex to Flex)
Low temp ACF
(PET to Flex)
Sense Flex
9003
9004
LED Flex
LCD Driver
LED
Cover 0.8
Polarizer/Sense PET 0.2
CF Glass 0.3
TFT Glass 0.3
Polarizer 0.2
Backlight
9002
1. PSA 0.18
2. ITO Sense
3. Color Filter
4. ITO VCOM / Drive
5. TFT Layers
9001
1.8 top to bottom of LCD Glass

FIG. 90

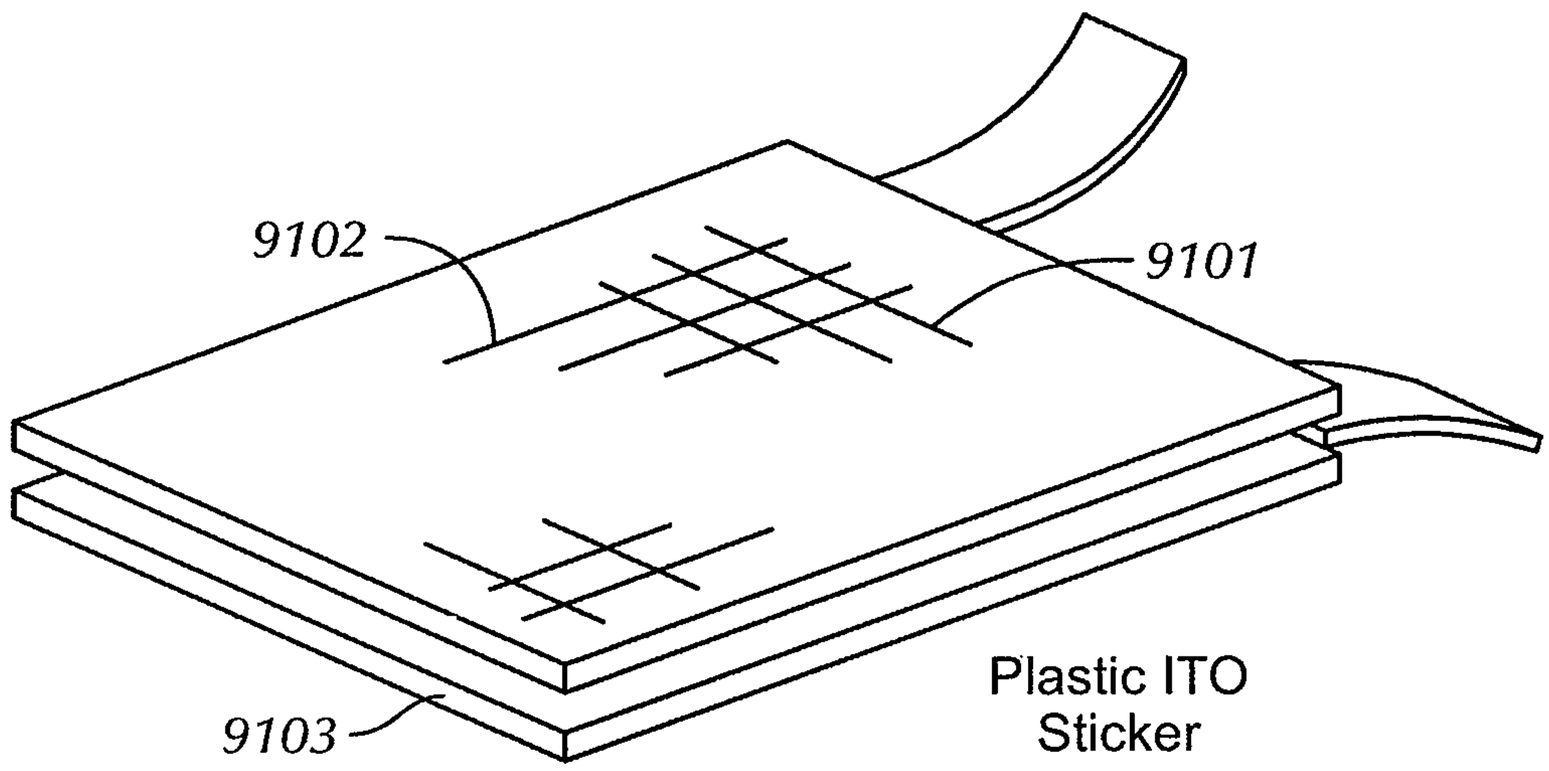
9102
9101
9103
Plastic ITO
Sticker

FIG. 91

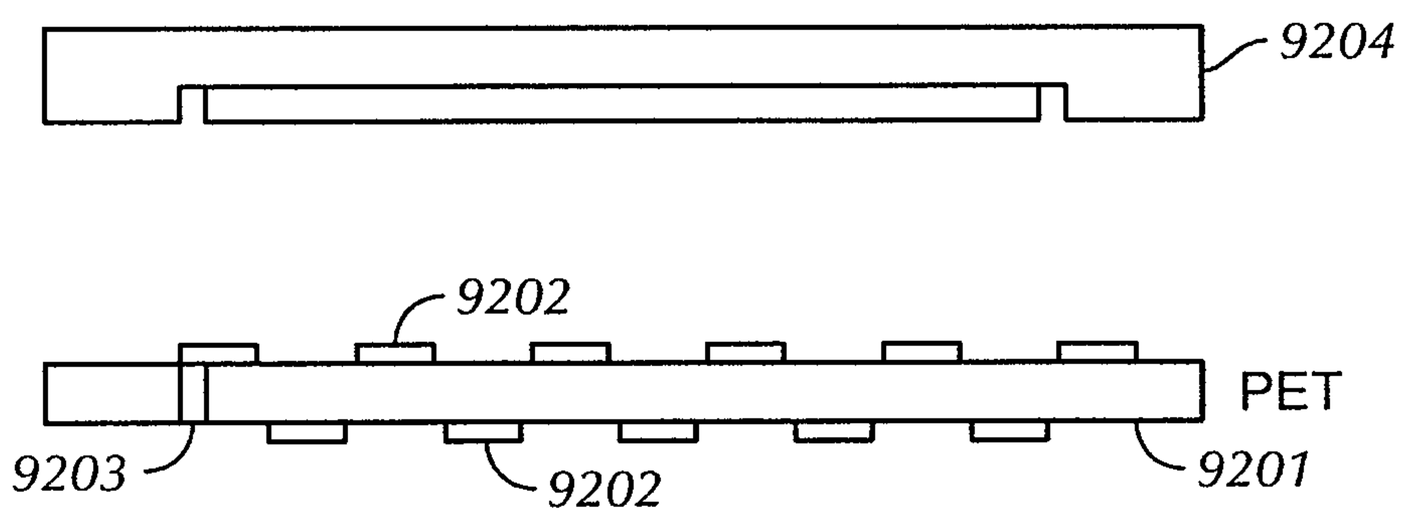
9204
9202
PET
9203
9202
9201

FIG. 92

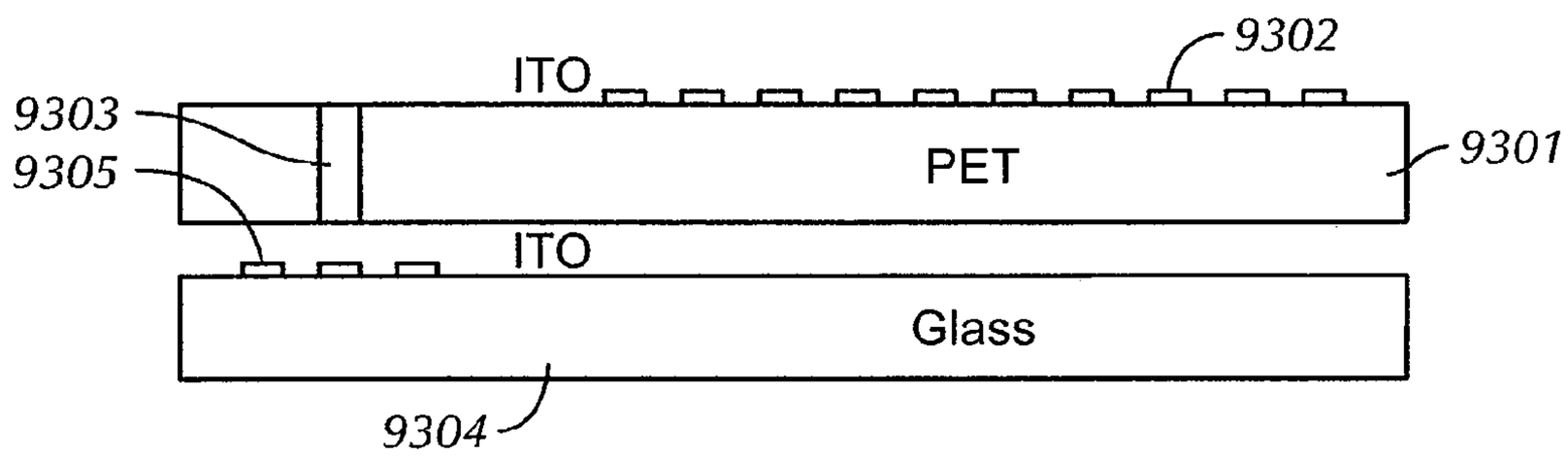
9302
ITO
9303
9305
PET
9301
ITO
Glass
9304

FIG. 93

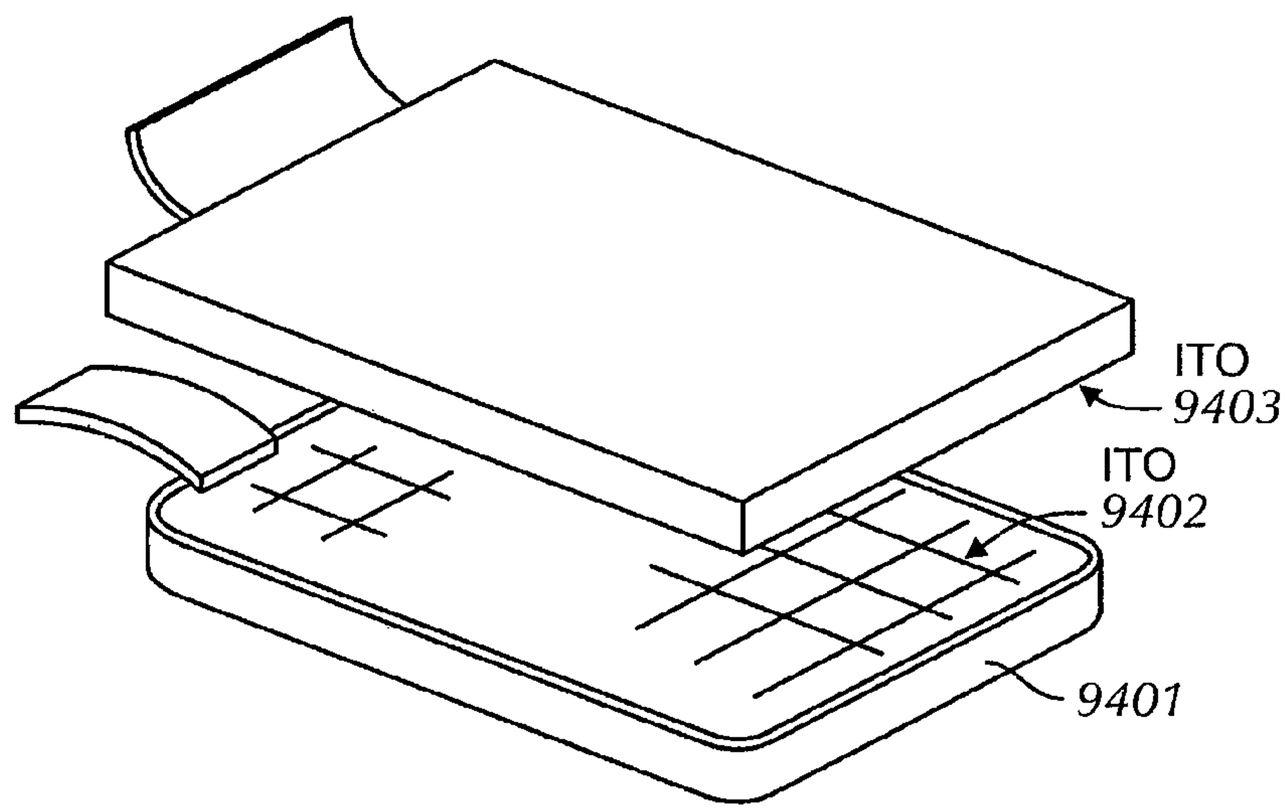
ITO
9403
ITO
9402
9401

FIG. 94

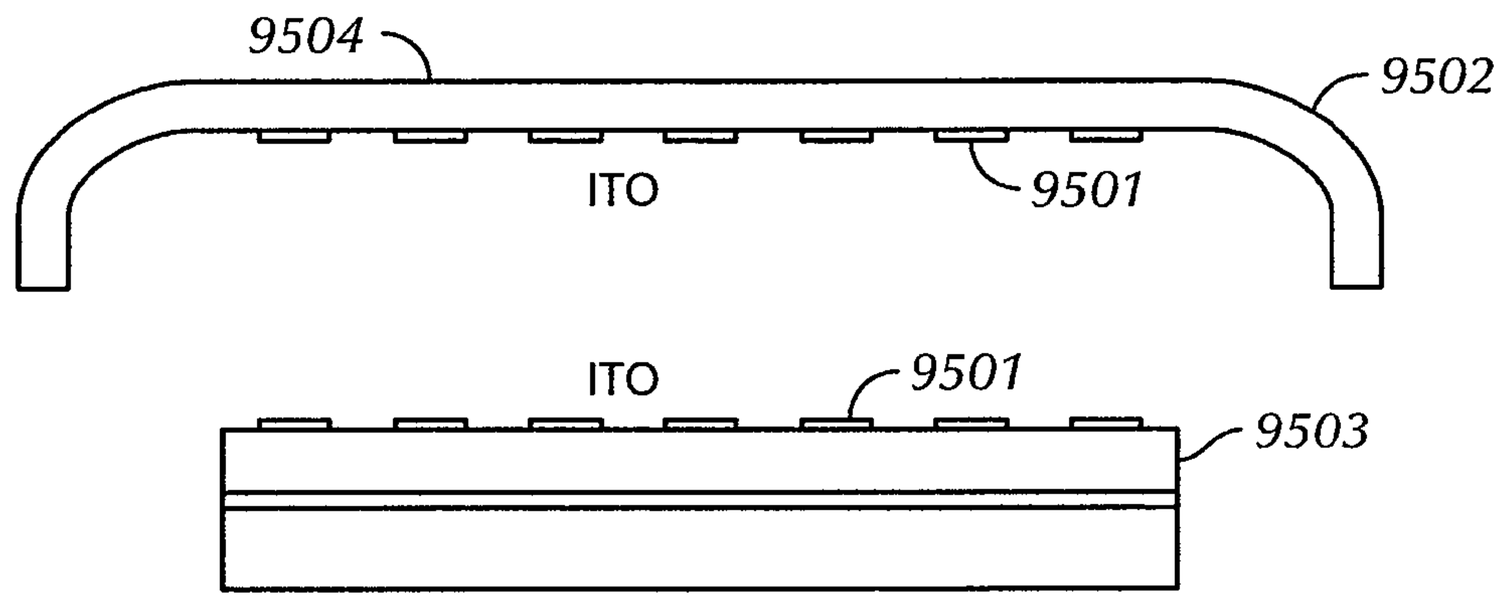
9504
9502
ITO
9501
ITO
9501
9503

FIG. 95

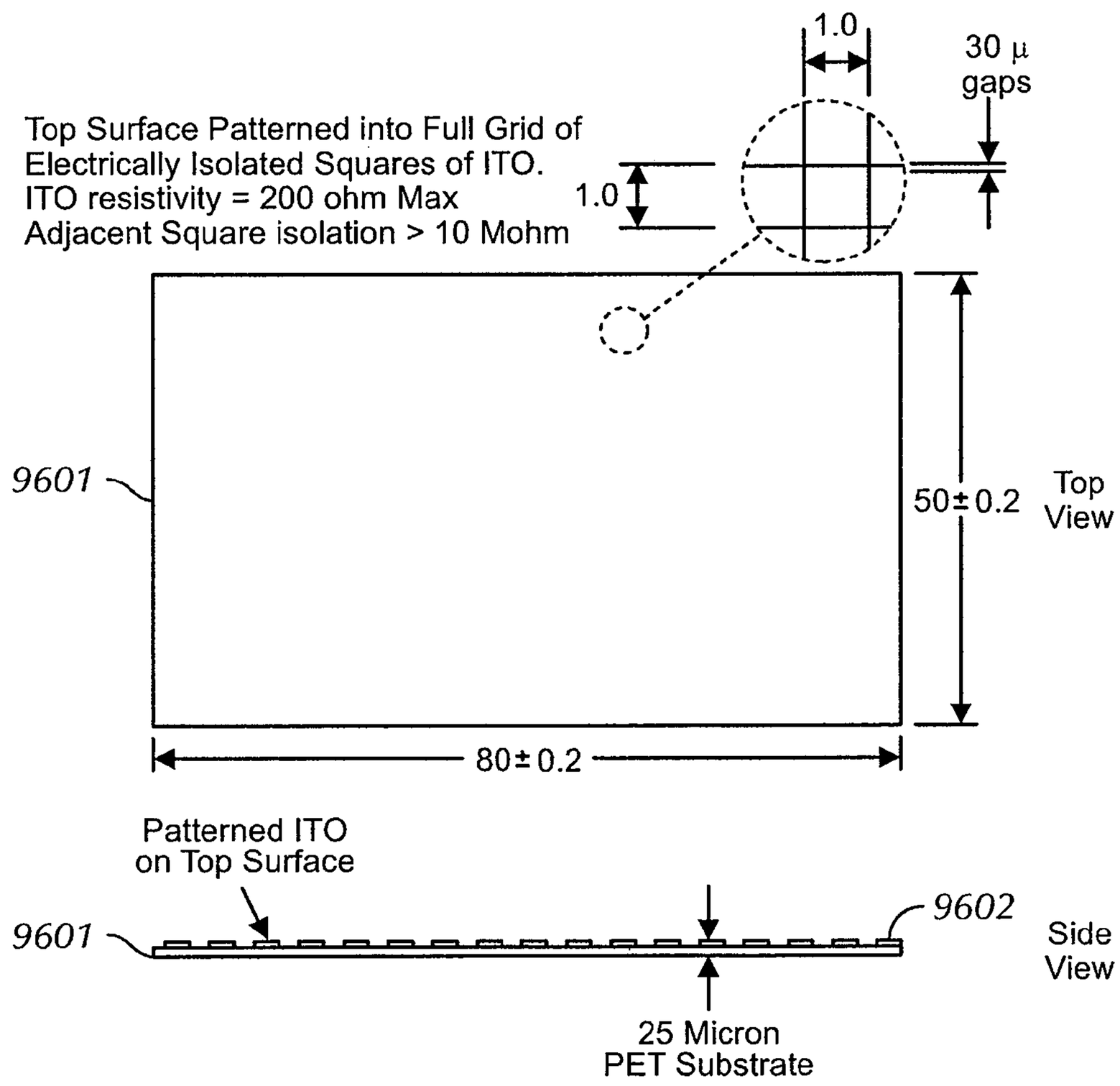
Top Surface Patterned into Full Grid of
Electrically Isolated Squares of ITO.
ITO resistivity = 200 ohm Max
Adjacent Square isolation > 10 Mohm
1.0
30 μ
gaps
1.0
9601
50±0.2
Top
View
80±0.2
Patterned ITO
on Top Surface
9601
9602
Side
View
25 Micron
PET Substrate

FIG. 96

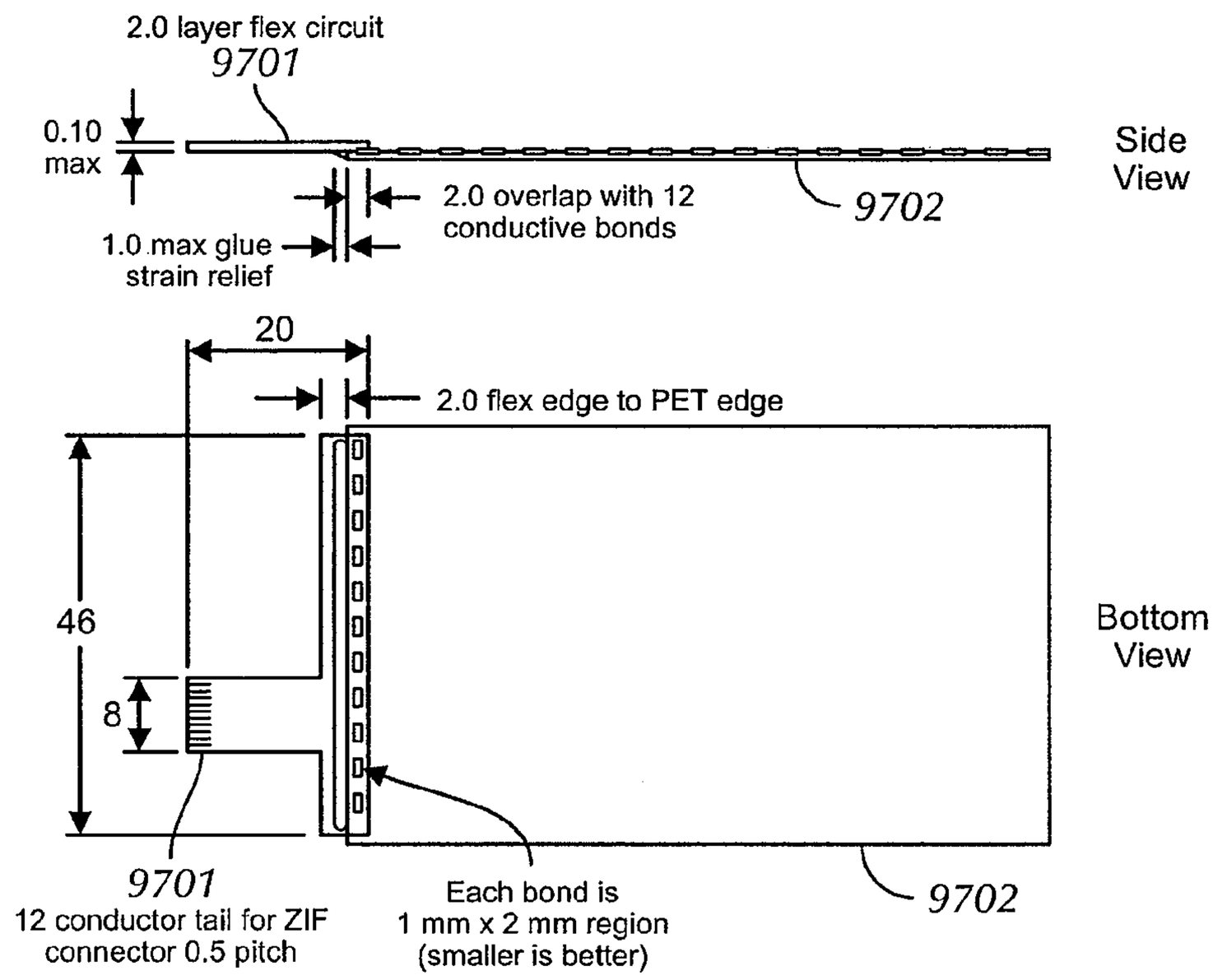
2.0 layer flex circuit
9701
0.10
max
Side
View
2.0 overlap with 12
conductive bonds
9702
1.0 max glue
strain relief
20
2.0 flex edge to PET edge
46
Bottom
View
8
9701
12 conductor tail for ZIF
connector 0.5 pitch
Each bond is
1 mm x 2 mm region
(smaller is better)
9702

FIG. 97

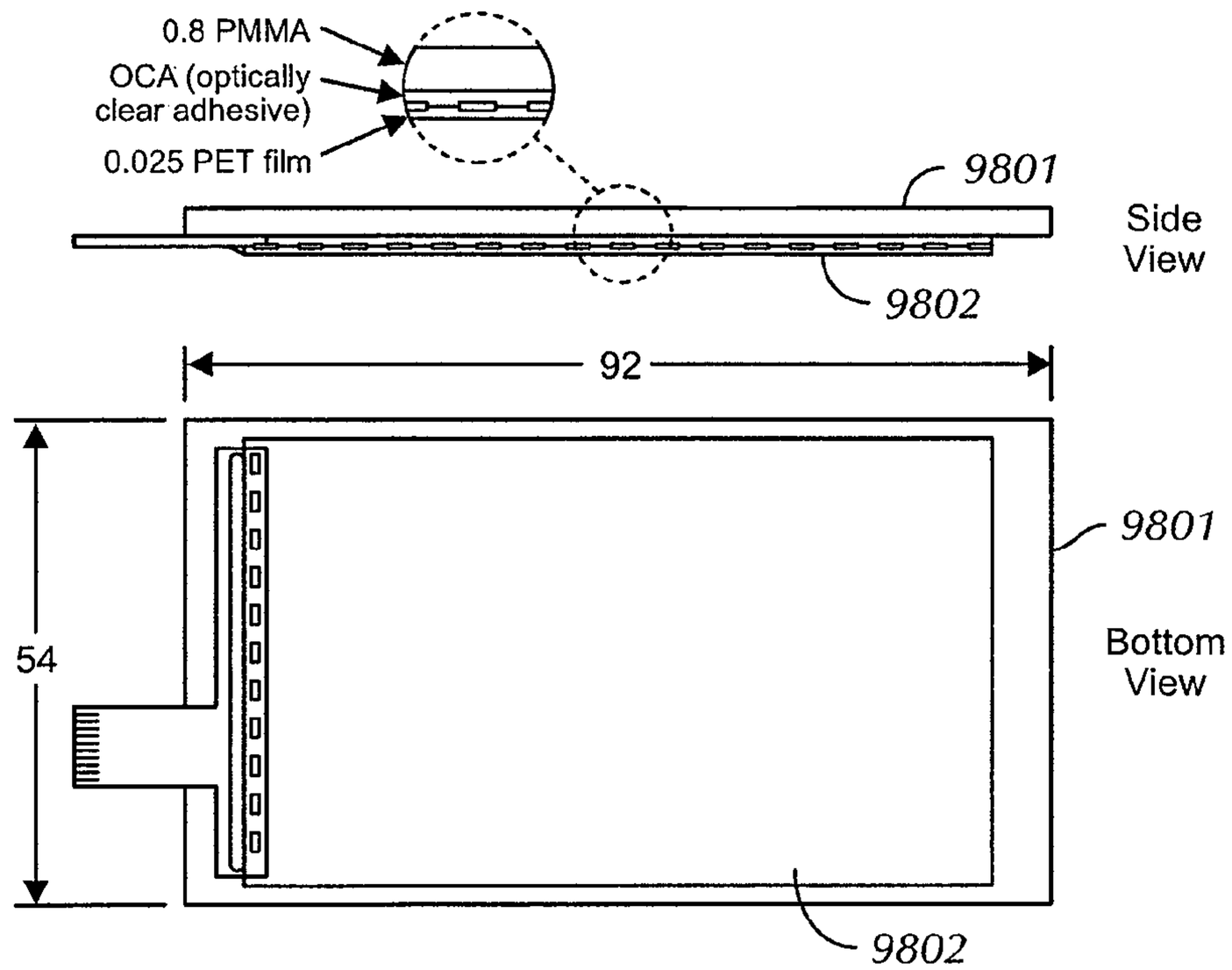
0.8 PMMA
OCA (optically
clear adhesive)
0.025 PET film
9801
Side
View
9802
92
9801
54
Bottom
View
9802

FIG. 98

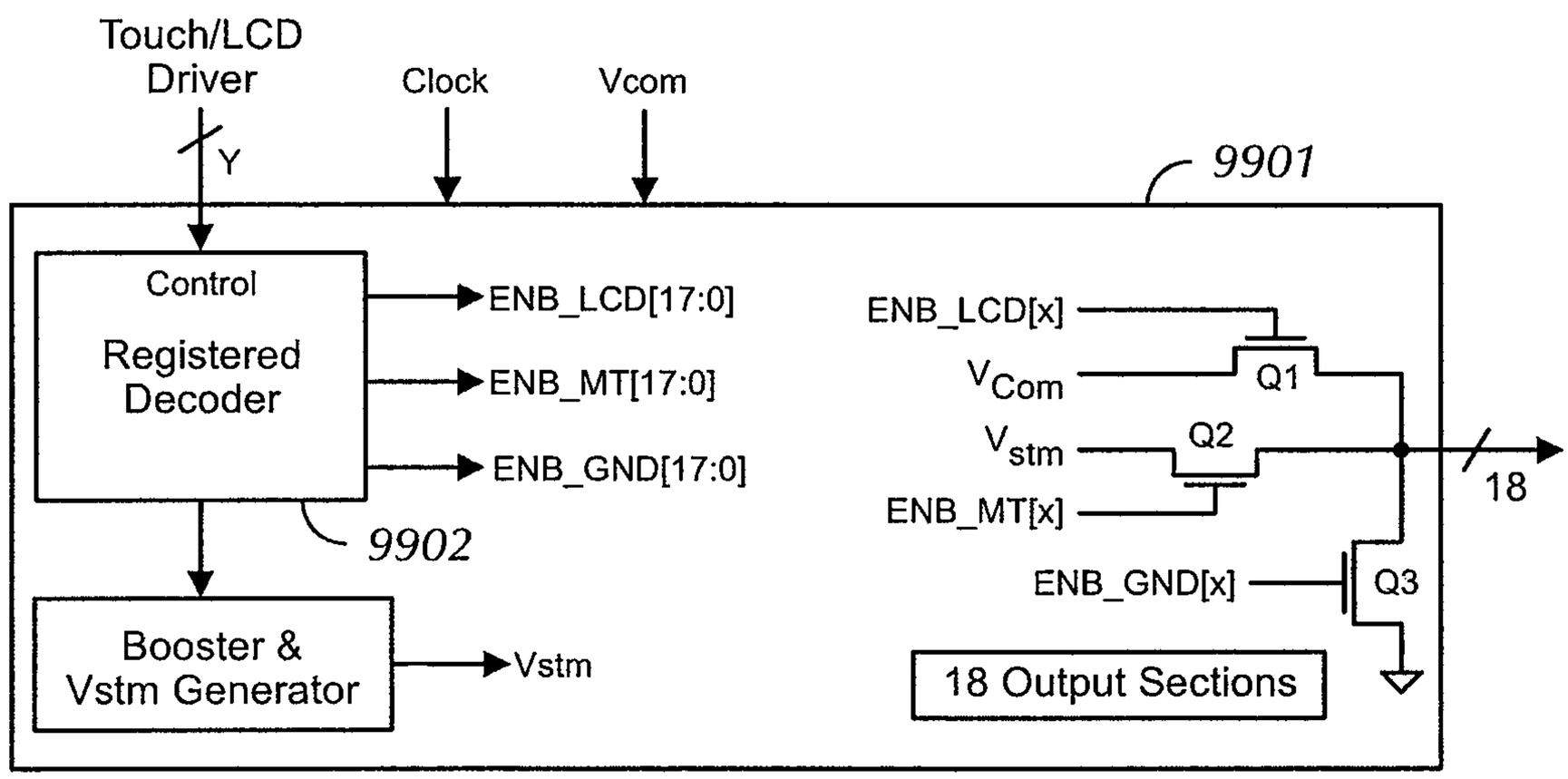
Touch/LCD Driver
Clock
Vcom
Y
9901
Control
Registered Decoder
ENB_LCD[17:0]
ENB_MT[17:0]
ENB_GND[17:0]
9902
Booster & Vstm Generator
Vstm
ENB_LCD[x]
VCom
Vstm
ENB_MT[x]
ENB_GND[x]
Q1
Q2
Q3
18
18 Output Sections

FIG. 99

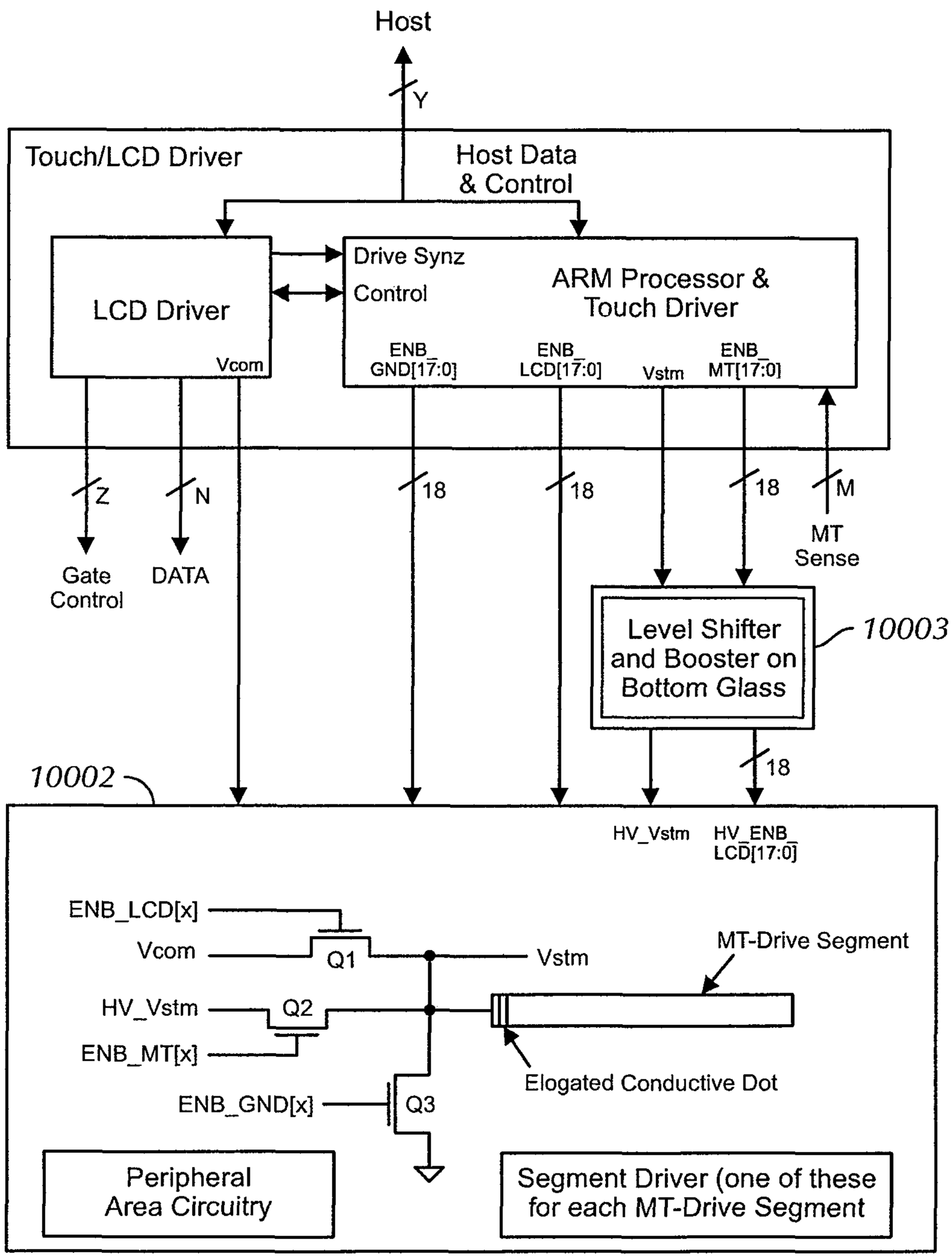
Host
Y
Touch/LCD Driver
Host Data
& Control
LCD Driver
Vcom
Drive Synz
Control
ARM Processor &
Touch Driver
ENB_
GND[17:0]
ENB_
LCD[17:0]
Vstm
ENB_
MT[17:0]
Z
N
18
18
18
M
Gate
Control
DATA
MT
Sense
Level Shifter
and Booster on
Bottom Glass
10003
18
10002
HV_Vstm
HV_ENB_
LCD[17:0]
ENB_LCD[x]
Vcom
Q1
Vstm
MT-Drive Segment
HV_Vstm
Q2
ENB_MT[x]
Elogated Conductive Dot
ENB_GND[x]
Q3
Peripheral
Area Circuitry
Segment Driver (one of these
for each MT-Drive Segment

FIG. 100

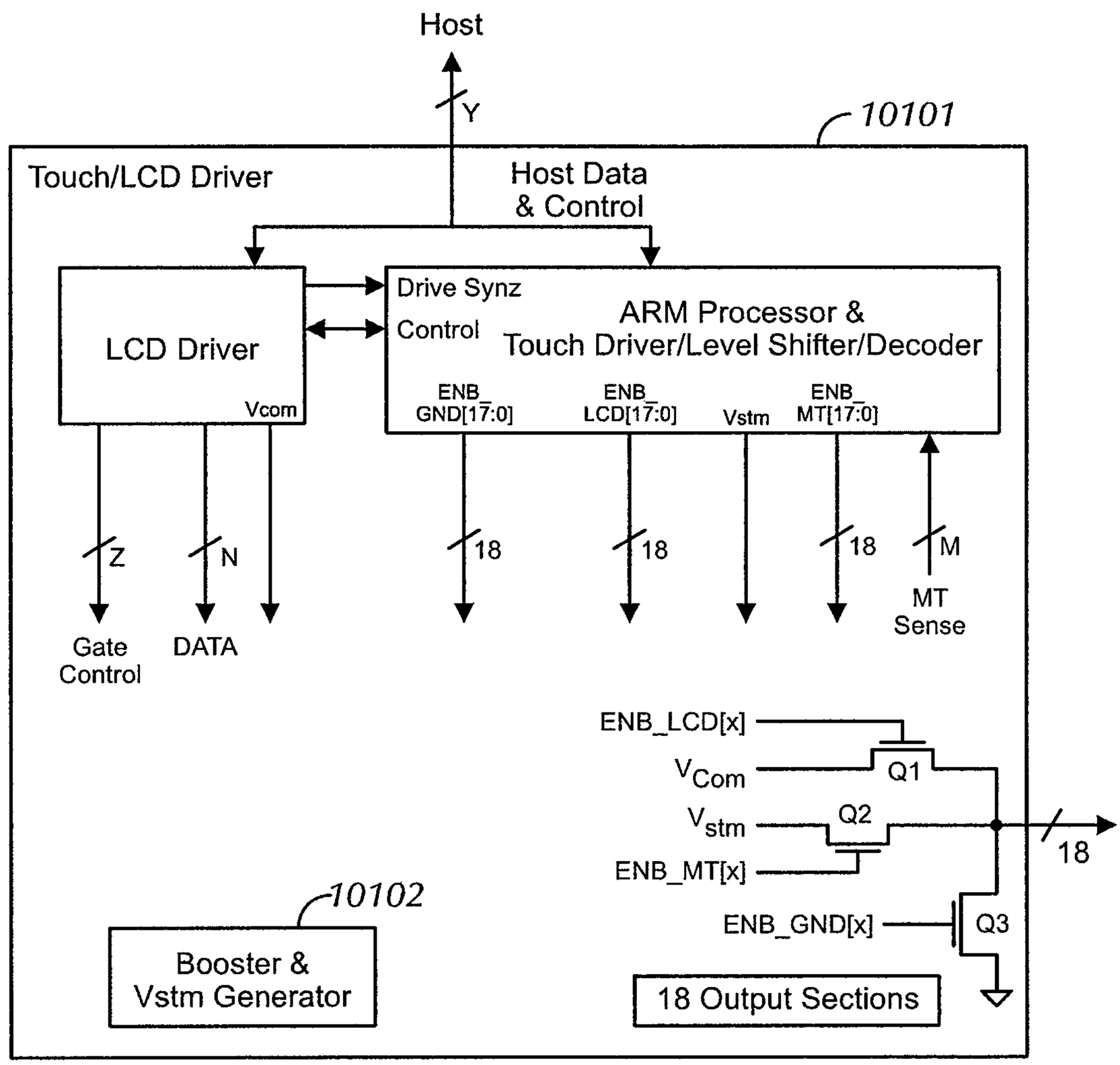
Host
Y
10101
Touch/LCD Driver
Host Data
& Control
LCD Driver
Vcom
Drive Synz
Control
ARM Processor &
Touch Driver/Level Shifter/Decoder
ENB_
GND[17:0]
ENB_
LCD[17:0]
Vstm
ENB_
MT[17:0]
Z
N
18
18
18
M
Gate
Control
DATA
MT
Sense
ENB_LCD[x]
VCom
Q1
Vstm
Q2
18
ENB_MT[x]
10102
ENB_GND[x]
Q3
Booster &
Vstm Generator
18 Output Sections

FIG. 101

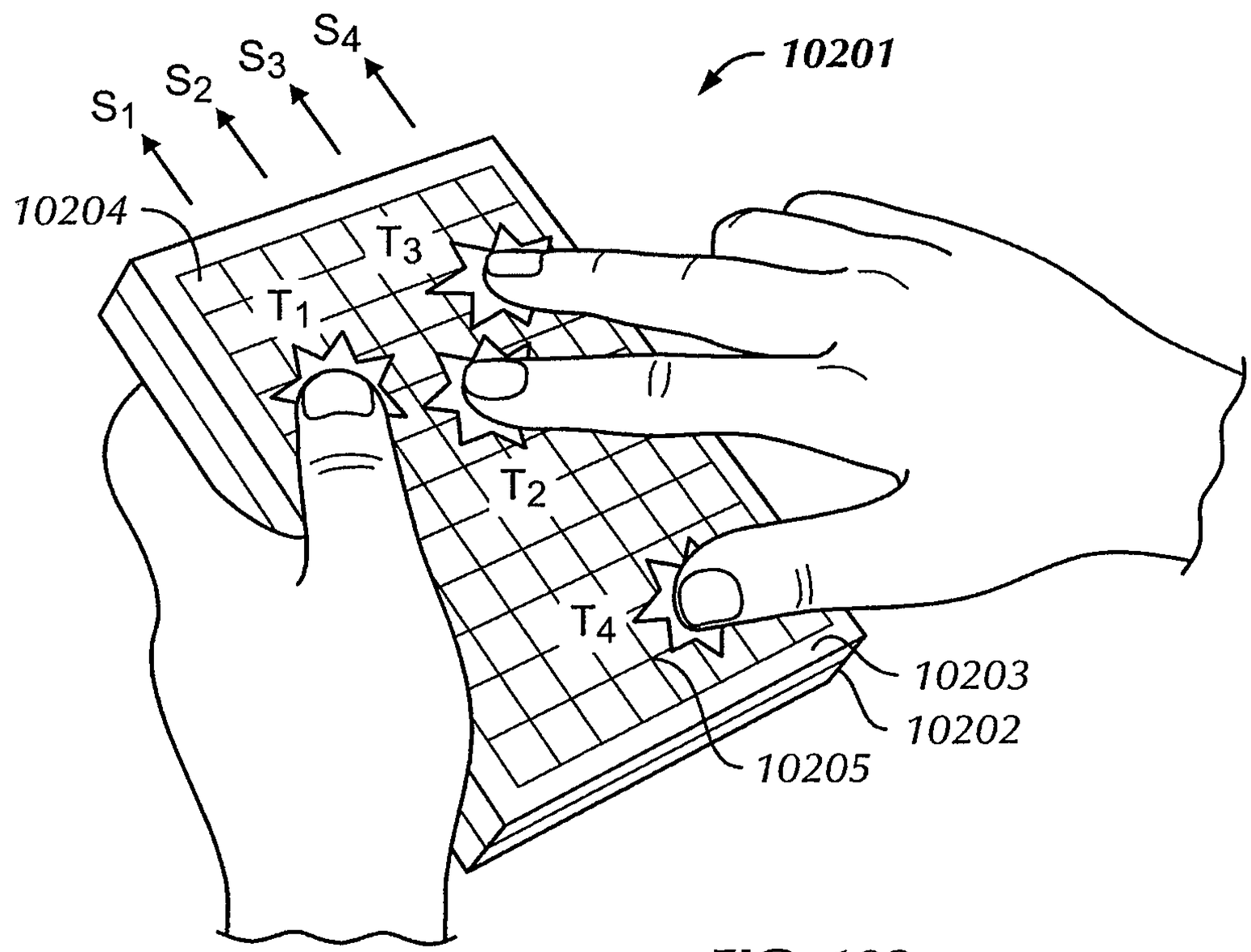

FIG. 102

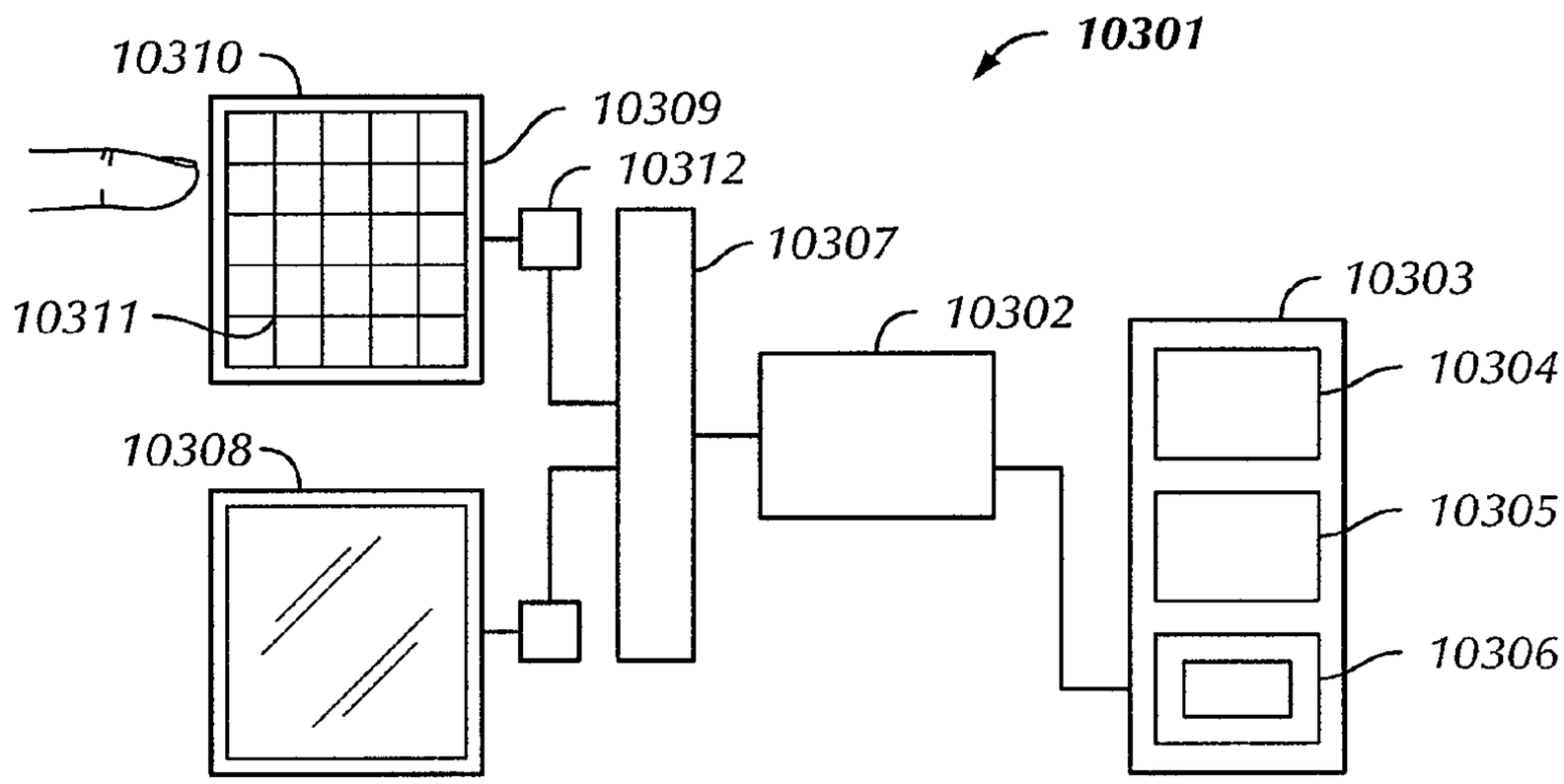

FIG. 103

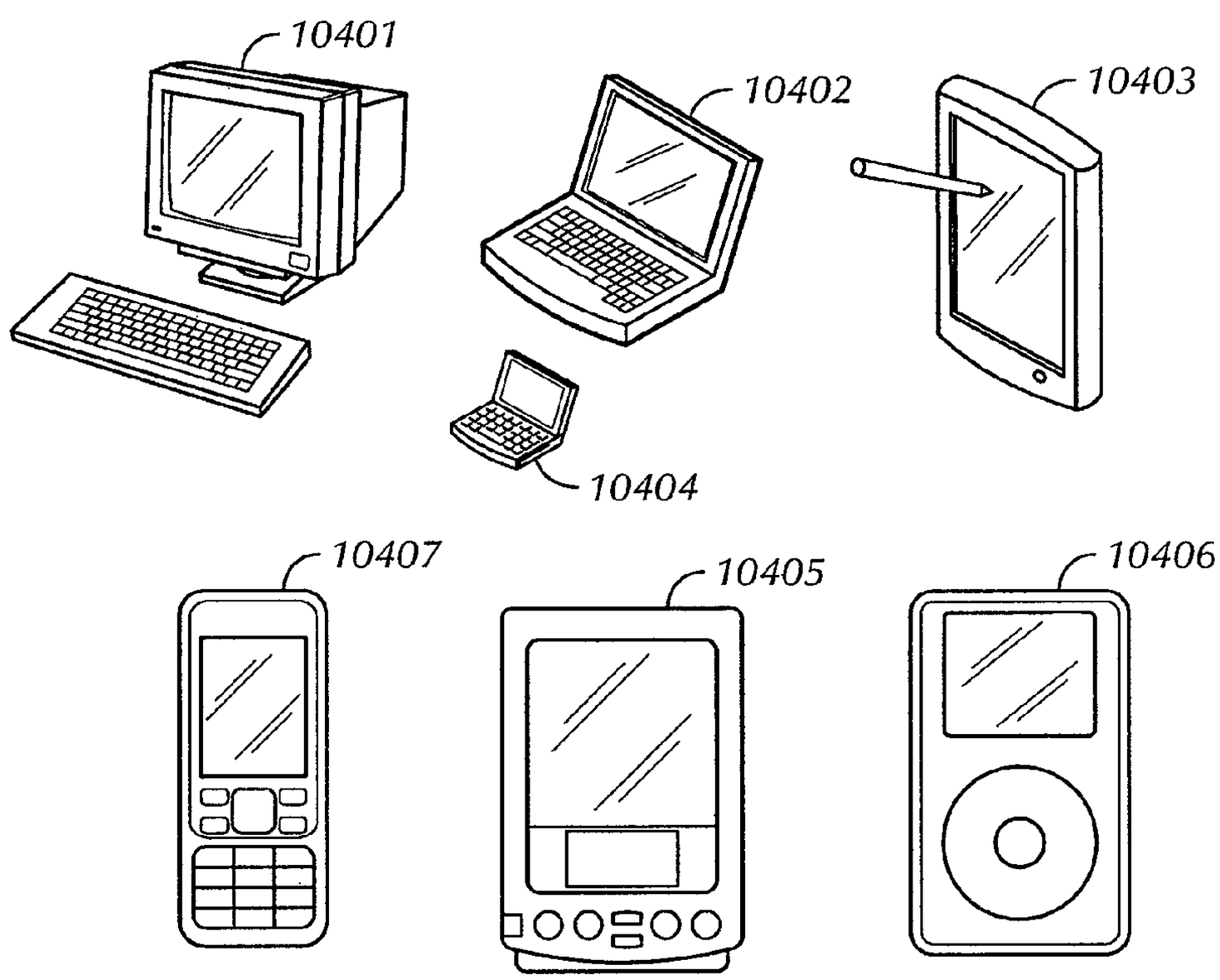

FIG. 104

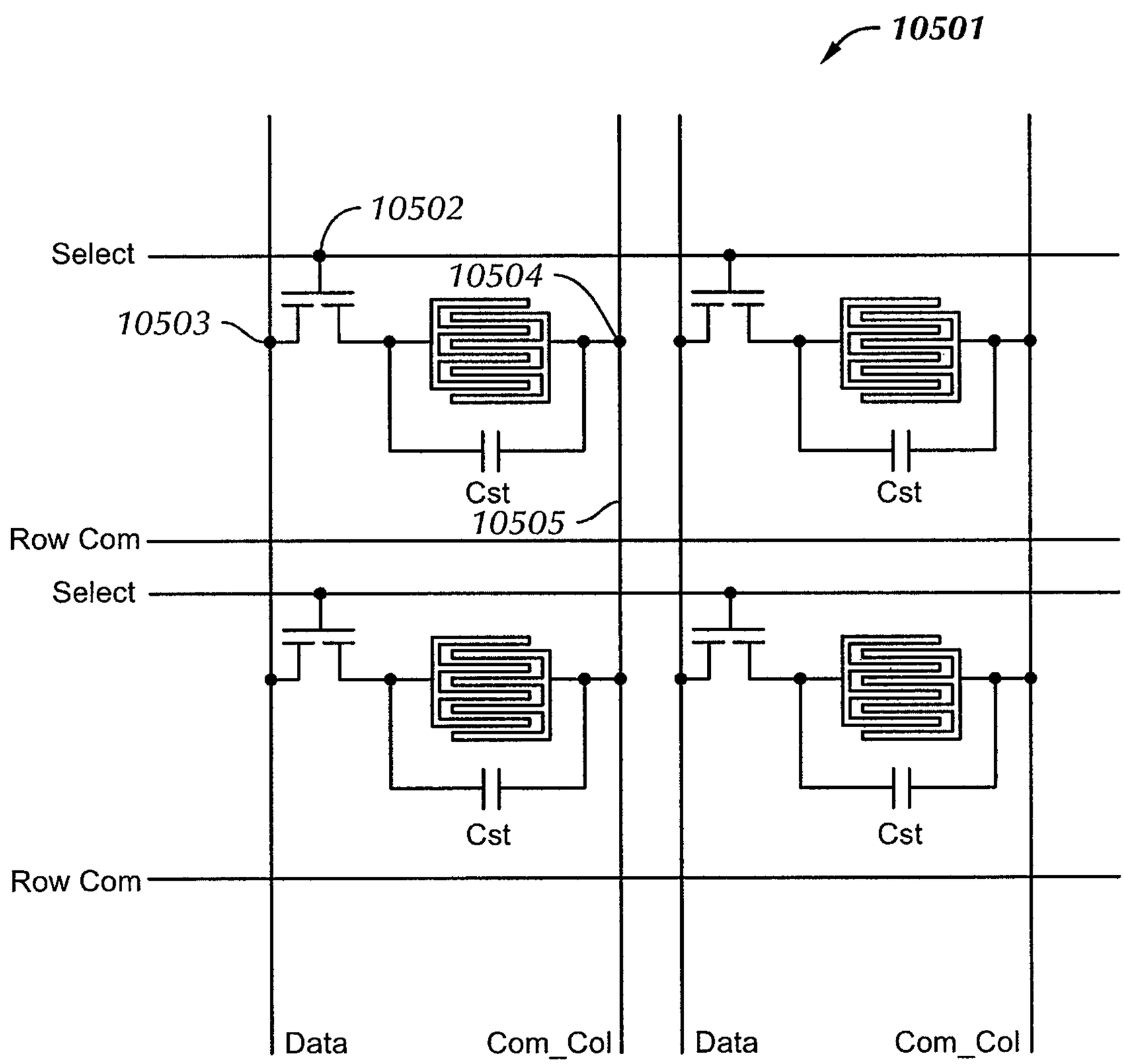
10501
10502
Select
10504
10503
Cst
Cst
10505
Row Com
Select
Cst
Cst
Row Com
Data
Com_Col
Data
Com_Col

FIG. 105

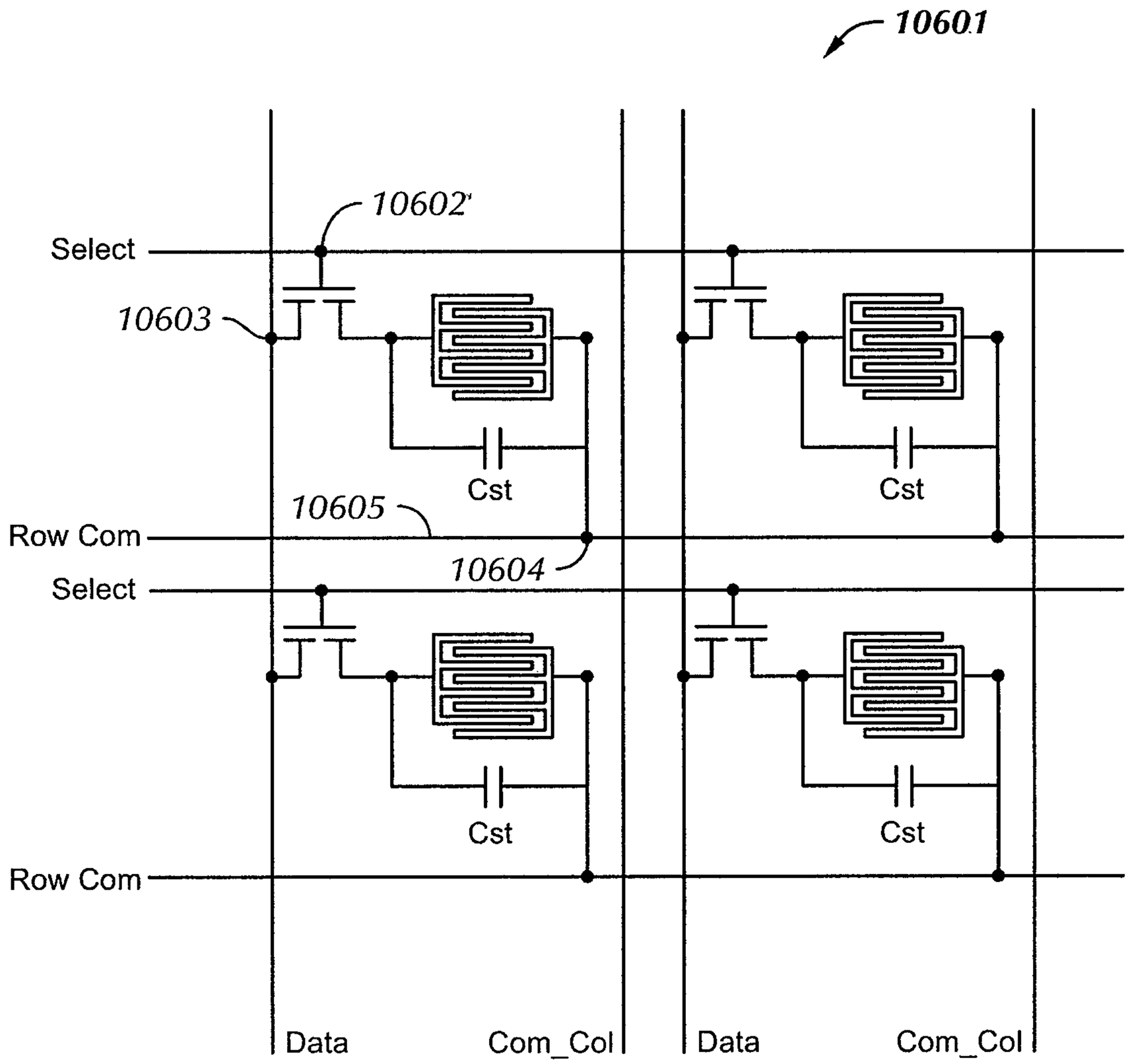
10601
10602
Select
10603
Cst
Cst
10605
Row Com
10604
Select
Cst
Cst
Row Com
Data
Com_Col
Data
Com_Col

FIG. 106

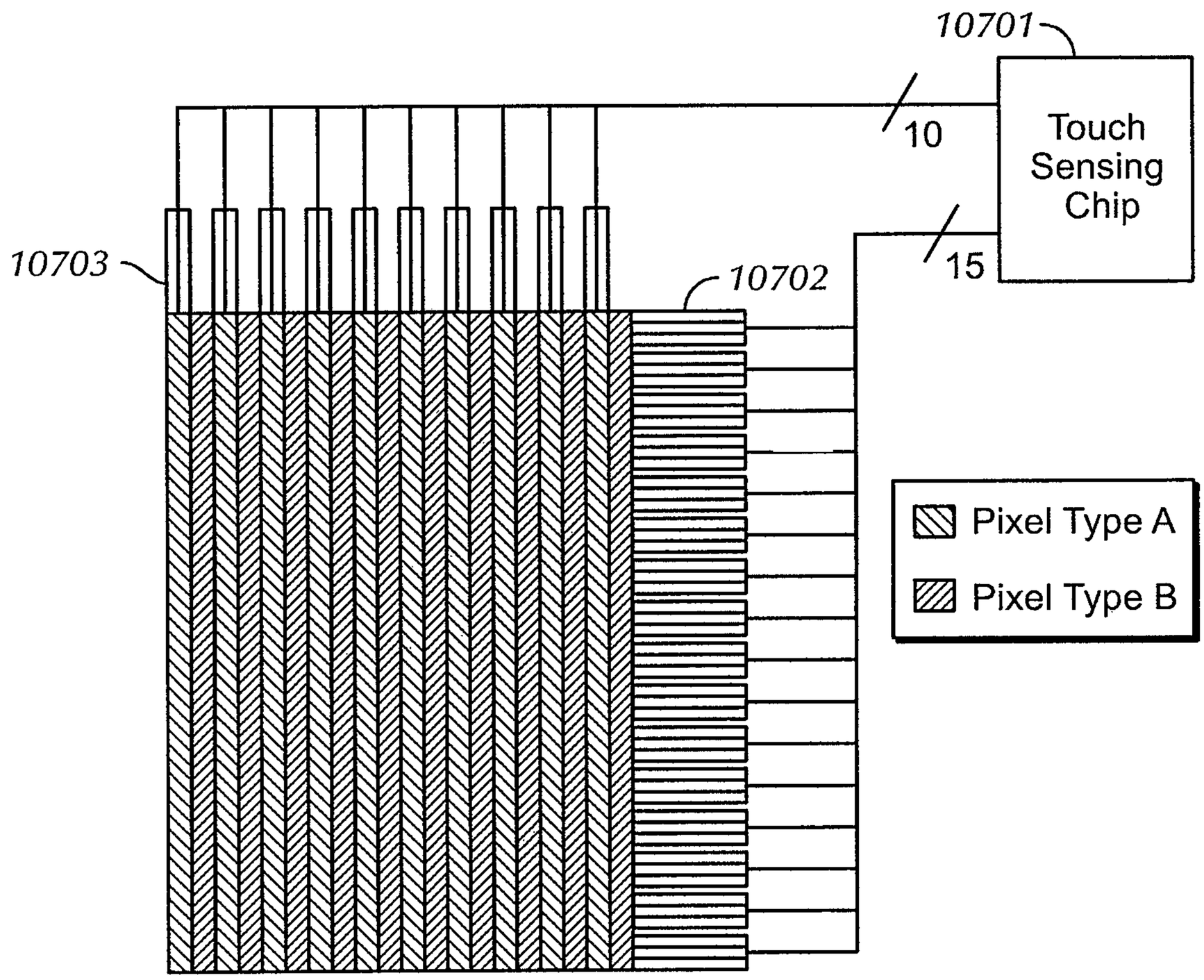
10701
10
Touch
Sensing
Chip
15
10703
10702
Pixel Type A
Pixel Type B

FIG. 107

TOUCH SCREEN LIQUID CRYSTAL DISPLAY

CROSS-REFERENCE TO RELATED APPLICATIONS

This application is a divisional of U.S. patent application Ser. No. 11/760,080, filed Jun. 8, 2007, which claims priority to Provisional U.S. Patent Application No. 60/804,361, filed Jun. 9, 2006, and Provisional U.S. Patent Application No. 60/883,979, filed Jan. 8, 2007, the contents of which are hereby incorporated by reference in their entirety.

This application is related to the following publications incorporated by reference herein:

U.S. Patent Publication No.: 2006/197753, titled "Multi-Functional Hand-Held Device," published Sep. 7, 2006.

U.S. Patent Publication No.: 2006/0097991, titled "Multipoint Touchscreen," published May 11, 2006, now U.S. Pat. No. 7,663,607, issued on Feb. 16, 2010.

U.S. Patent Publication No.: 2007/0257890, titled "Multipoint Touch Surface Controller," published on Nov. 8, 2007, now U.S. Pat. No. 8,279,180, issued on Oct. 2, 2012.

U.S. Patent Publication No.: 2008/0158181, entitled "Double-Sided Touch Sensitive Panel and Flex Circuit Bonding," published Jul. 3, 2008, now U.S. Pat. No. 8,026,903, issued on Sep. 27, 2011.

U.S. Patent Publication No.: 2008/0062147, entitled "Touch Screen Liquid Crystal Display," published Mar. 13, 2008, now U.S. Pat. No. 8,259,078, issued on Sep. 4, 2012.

U.S. Patent Publication No.: 2008/0062139, entitled "Integrated Display and Touch Screen," published Mar. 13, 2008, now U.S. Pat. No. 8,552,989, issued on Oct. 8, 2013.

U.S. Patent Publication No.: 2008/0062148, entitled "Touch Screen Liquid Crystal Display," published Mar. 13, 2008, now U.S. Pat. No. 8,243,027, issued on Aug. 14, 2012.

BACKGROUND

There exist today many types of hand-held electronic devices, each of which utilizes some sort of user interface. The user interface can include an output device in the form of a display, such as a Liquid Crystal Display (LCD), and one or more input devices, which can be mechanically actuated (e.g., switches, buttons, keys, dials, joysticks, joy pads) or electrically activated (e.g., touch pads or touch screens). The display can be configured to present visual information such as text, multi-media data, and graphics, and the input devices can be configured to perform operations such as issuing commands, making selections, or moving a cursor or selector in the electronic device.

Recently work has been progressing on integrating various devices into a single hand-held device. This has further led to attempts to integrate many user interface models and devices into a single unit. A touch screen can be used in such systems for both practical and aesthetic reasons. Additionally, multi-touch capable touch screens can provide a variety of advantages for such a device.

Heretofore, it has been assumed that touch screens, whether single touch or multi-touch, could be produced by fabricating a traditional LCD screen, and disposing a substantially transparent touch sensing device in front of this screen. However, this presents a number of disadvantages, including substantial manufacturing costs.

SUMMARY

According to one embodiment of the invention, an integrated liquid crystal display touch screen is provided. The liquid crystal display can be based on in-plane-switching (IPS). The touch screen can include a plurality of layers including a first substrate having display control circuitry formed thereon (e.g., a TFT plate or array plate) and a second substrate (e.g., a color filter plate) adjacent the first substrate. The display control circuitry can include a pair of electrodes for each display sub-pixel. The touch screen can further include one or more touch sensing elements, wherein all touch sensing elements can be located between the substrates.

The touch sensing elements between the substrates can include a touch drive electrode and a touch sense electrode. These electrodes can also be the display sub-pixel electrodes. The touch sensing elements between the substrates can also include one or more switches configured to switch the electrodes between their display function and their touch function. The switches can comprise thin film transistors. The display VCOM can be used as a touch drive signal. The display data line can be used as a touch sense line. Alternatively, a plurality of metal sense lines can be disposed on the first substrate. Depending on the particular implementation, the display can be oriented with either the second substrate or the first substrate nearer to the user.

In another embodiment, an electronic device incorporating an integrated LCD touch screen according to the embodiments described above is provided. The electronic device can take the form of a desktop computer, a tablet computer, and a notebook computer. The electronic device can also take the form of a handheld computer, a personal digital assistant, a media player, and a mobile telephone. In some embodiments, a device may include one or more of the foregoing, e.g., a mobile telephone and media player.

BRIEF DESCRIPTION OF THE FIGURES

The invention may best be understood by reference to the following description taken in conjunction with the accompanying drawings in which:

FIG. **1** illustrates a multipoint sensing arrangement.

FIG. **2** illustrates a number of contact patches on a multipoint sensing system.

FIG. **3** illustrates a simplified schematic diagram of a mutual capacitance circuit.

FIG. **4** illustrates a process for operating a multipoint sensing arrangement.

FIG. **5** illustrates a representative layout for an LTPS transflective subpixel.

FIG. **6** illustrates a simplified model of an LTPS as viewed from the top and side.

FIG. **7** illustrates a circuit diagram for a subpixel and shows on which glass substrate the components are fabricated.

FIG. **8** illustrates a basic process flow for manufacturing LCDs.

FIG. **9** illustrates a finished small size LCD module.

FIG. **10** illustrates a block diagram of a touch screen LCD with separate touch driver and LCD driver chips.

FIG. **11** illustrates a block diagram of a touch screen LCD with an integrated LCD and touch driver chip.

FIG. **12** illustrates a basic stackup of a touch screen LCD.

FIG. **13** illustrates an alternative embodiment of a touch screen LCD.

FIG. **14** illustrates an electrode pattern.

FIG. **15** illustrates a stackup diagram embodiment of a touch-screen LCD.

FIG. **16** illustrates a touch pixel circuit for the touch-screen LCD illustrated in FIG. **15**.

FIG. **17** illustrates a touch-sensing layer protected by a plastic cover.

FIG. **18** illustrates an output column and a linked set of output gates for a region of a touch-screen.

FIG. **19** illustrates a layout of a touch pixel for a touch-screen LCD.

FIG. **20** illustrates a stackup diagram for one embodiment of a touch screen LCD.

FIG. **21** illustrates a touch sensor array.

FIG. **22** illustrates a physical implementation for Concepts A and B, with top and side views of cabling and subsystem placement.

FIG. **23** illustrates a high-level block diagram showing one possible architecture of bottom glass components.

FIG. **24** illustrates elongated conductive dots.

FIG. **25** illustrates a high-level block diagram for a Touch/LCD Driver integrated circuit.

FIG. **26** illustrates a flexible printed circuit for use with various LCD embodiments described herein.

FIG. **27** illustrates a process for simultaneous display updating and touch scanning.

FIG. **28** illustrates an Open Circuit V_{CST} touch drive option.

FIG. **29** illustrates a Drive-V_{CST} touch drive option.

FIG. **30** illustrates an electrical model for the situation where touch drive is used for both touch sensing and LCD V_{COM} modulation.

FIG. **31** illustrates connecting V_{STM} to Cst lines on both sides through conductive dots.

FIG. **32** illustrates a manufacturing process flow for a touch screen LCD.

FIG. **33** illustrates using one-line inversion of V_{COM} as a touch stimulus signal.

FIG. **34** illustrates a stackup diagram for an alternative embodiment of a touch screen LCD.

FIG. **35** illustrates a manufacturing process flow for a touch screen LCD.

FIG. **36** illustrates an embodiment substituting a conductive black matrix for a touch drive layer.

FIG. **37** illustrates a circuit diagram for an embodiment of a touch screen LCD.

FIG. **38** illustrates a stackup diagram for a touch screen LCD.

FIG. **39** illustrates a row-by-row update of display pixels for a touch screen LCD.

FIG. **40** illustrates a touch sensing process for a set of touch-sensitive display rows in a touch screen LCD.

FIG. **41** illustrates a process of detecting touches for three pixels located in different regions of a touch screen LCD.

FIG. **42** illustrates a circuit diagram of another embodiment of a touch screen LCD.

FIG. **43** illustrates a stack up diagram of the embodiment illustrated in FIG. **42**.

FIG. **44** illustrates an embodiment substituting a conductive black matrix for a touch sense layer.

FIG. **45** illustrates a stackup diagram of another embodiment of a touch screen LCD.

FIG. **46** illustrates a top view of the embodiment illustrated in FIG. **55**.

FIG. **47** illustrates another embodiment of a touch screen LCD.

FIG. **48** illustrates an equivalent circuit of the embodiment of FIG. **47**.

FIG. **49** illustrates the waveforms that can be used for touch sensing in the embodiment of FIGS. **47-48**.

FIG. **50** illustrates further aspects of touch screen integration for the embodiment of FIG. **47**.

FIG. **51** illustrates another embodiment of a touch screen LCD.

FIG. **52** illustrates the waveforms that can be used for touch sensing in the embodiment of FIGS. **51** and **53**.

FIG. **53** illustrates an equivalent circuit of the embodiment of FIG. **51**.

FIG. **54** illustrates further aspects of touch screen integration for the embodiment of FIG. **51**.

FIG. **55** illustrates a stackup diagram for a touch-screen LCD.

FIG. **56** illustrates a process of updating a touch-screen LCD.

FIG. **57** illustrates a stackup diagram for an embodiment of a touch-screen LCD.

FIG. **58** illustrates a stackup diagram for an embodiment of a touch-screen LCD.

FIG. **59** illustrates an exemplary LCD display divided into three regions that can be updated or touch-scanned independently.

FIGS. **60**A and **60**B illustrate updates and touch-scanning of a touch-screen LCD with three regions.

FIGS. **61**A and **61**B illustrate an electrode layout for a touch-screen LCD.

FIG. **62** illustrates circuit components for a touch-screen LCD.

FIG. **63** illustrates a snapshot of an update arrangement for a touch-screen LCD.

FIG. **64** illustrates how metal lines and gaps in ITO that can be fully or partially hidden behind a black matrix.

FIG. **65** illustrates a stackup diagram for a touch-screen LCD.

FIG. **66** illustrates a touch-screen LCD segmented into three regions.

FIG. **67** illustrates a process of performing display updates and touch-scanning in a touch-screen LCD.

FIG. **68** illustrates wiring and ITO layout to segment a touch screen LCD into three regions.

FIG. **69** illustrates a top view and cross-section of a region of a touch-screen LCD that includes guard traces.

FIG. **70** illustrates a top view and cross-section of a region of a touch-screen LCD that does not include guard traces.

FIG. **71** illustrates a region of an exemplary display that contains six touch pixels and their signal wiring.

FIG. **72** illustrates a stackup diagram for another embodiment of a touch-screen LCD.

FIG. **73** illustrates a stackup diagram for another embodiment of a touch-screen LCD.

FIG. **74** illustrates a circuit diagram highlighting V_{COM} signal coupling for a touch screen LCD.

FIG. **75** illustrates an exemplary display.

FIG. **76** illustrates a possible scan pattern for a touch-screen LCD.

FIG. **77** illustrates a circuit diagram for the embodiment of FIG. **79**.

FIG. **78** illustrates segment ITO layers.

FIG. **79** illustrates a stackup diagram for another embodiment of a touch-screen LCD.

FIG. **80** illustrates a combined wiring and stackup diagram for the embodiment of FIG. **79**.

FIG. **81** illustrates a physical realization of the embodiment of FIG. **79**.

FIG. **82** illustrates in-plane switching LCD cells.

FIG. **83** illustrates an organization of electrodes for in-plane switching LCD cells.

FIG. **84** illustrates a circuit diagram for an embodiment of an IPS-based touch-screen LCD.

FIG. **85** illustrates a stackup diagram corresponding to FIG. **84**.

FIG. **86** illustrates a stackup diagram for another embodiment of an IPS-based touch-screen LCD.

FIG. **87** illustrates a physical model for Concept F, an embodiment of an IPS-based touch-screen LCD.

FIG. **88** illustrates a stackup diagram corresponding to the embodiment of FIG. **87**.

FIG. **89** illustrates a side view of an all glass touch screen LCD.

FIG. **90** illustrates a side view of a touch screen LCD including a plastic layer.

FIG. **91** illustrates a touch screen having multiple plastic layers.

FIG. **92** illustrates a touch screen having a PET layer patterned on two sides with a connection through the PET layer.

FIG. **93** illustrates a combination PET/glass touch screen.

FIG. **94** illustrates a touch screen LCD device assembly.

FIG. **95** illustrates a touch screen LCD having a touch layer patterned on the inside of a transparent plastic housing.

FIG. **96** illustrates a patterned PET substrate that may be used with a touch screen LCD.

FIG. **97** illustrates flexible printed circuits bonded to the PET substrate of FIG. **96**.

FIG. **98** illustrates a cover affixed to the assembly of FIG. **97**.

FIG. **99** illustrates a simplified diagram of a level shifter/decoder chip on glass.

FIG. **100** illustrates a modified Touch/LCD Driver and peripheral transistor circuit.

FIG. **101** illustrates a simplified block diagram of a fully-integrated Touch/LCD Driver.

FIG. **102** illustrates an application of a touch screen LCD.

FIG. **103** illustrates a block diagram of a computer system incorporating a touch screen.

FIG. **104** illustrates a variety of electronic device and computer system form factors that may be used with a touch-screen LCD according to the present invention.

FIG. **105** illustrates a plurality of IPS LCD sub-pixels connected to form a plurality of touch sense columns.

FIG. **106** illustrates a plurality of IPS LCD sub-pixels connected to form a plurality of touch sense rows.

FIG. **107** illustrates an IPS LCD with integrated touch sensing.

DETAILED DESCRIPTION

The following description is presented to enable any person skilled in the art to make and use the invention, and is provided in the context of a particular application and its requirements. Various modifications to the disclosed embodiments will be readily apparent to those skilled in the art, and the general principles defined herein may be applied to other embodiments and applications without departing from the spirit and scope of the present invention. Thus, the present invention is not limited to the embodiments shown, but is to be accorded the widest scope consistent with the claims.

1. LCD and Touch Sensing Background

Disclosed herein are techniques to integrate touch sensing technology into liquid crystal displays.

As known to those skilled in the art, an LCD includes a plurality of layers, most basically, a top glass, a liquid crystal, and a bottom glass. The top and bottom glass can be patterned to provide the boundaries of the cells that contain the liquid crystal for a particular display pixel. The top and bottom glass can also be patterned with various layers of conducting materials and thin film transistors that allow the voltage across the liquid crystal cells to be varied to manipulate the orientation of the liquid crystal, thereby controlling the color and brightness of the pixel.

As described in the applications incorporated by reference, a touch surface, and specifically, a multi-touch capable transparent touch surface can be formed from a series of layers. The series of layers can include at least one substrate, e.g., glass, which can have disposed thereon a plurality of touch sensitive electrodes. For example, a mutual capacitance arrangement can include a plurality of drive electrodes and a plurality of sense electrodes separated by a non-conducting layer, i.e., the glass. Capacitive coupling between the drive and sense electrodes can be affected by proximity of a conductive object (e.g., a user's finger). This change in capacitive coupling can be used to determine the location, shape, size, motion, identity, etc. of a particular touch. These parameters can then be interpreted to control operation of a computer or other electronic device. Self-capacitance arrangements, as described below, are also known to those skilled in the art.

By integrating the layered structure of an LCD and a touch sensor, a variety of benefits can be achieved. This integration can include combining or interleaving the layered structures described above. Integration can further include eliminating redundant structures and/or finding dual purposes (e.g., one purpose for the touch function and another for the display function) for particular layers or structures. This can permit some layers to be eliminated, which can reduce cost and thickness of the touch screen LCD, as well as simplify manufacturing. A variety of different arrangements are possible, some of which are discussed in greater detail herein.

Specifically, various embodiments of an integrated touch screen LCD are discussed below. However, those skilled in the art will appreciate that the detailed description given herein with respect to these figures is exemplary and not exhaustive and that many variations on these embodiments are possible. Additionally, although many of the disclosed embodiments relate to multi-touch capable arrangements, many of the teachings can be applied to single-touch displays as well.

1.1 Multi-Touch Sensing

Recognizing multiple simultaneous or near-simultaneous touch events may be accomplished with a multi-touch sensing arrangement as illustrated in FIG. **1**. Multi-touch sensing arrangement **100** can detect and monitor multiple touch attributes (including, for example, identification, position, velocity, size, shape, and magnitude) across touch sensitive surface **101**, at the same time, nearly the same time, at different times, or over a period of time. Touch-sensitive surface **101** can provide a plurality of sensor points, coordinates, or nodes **102** that function substantially independently of one another and that represent different points on a touch sensitive surface. Sensing points **102** may be positioned in a grid or a pixel array, with each sensing point capable of generating a signal at the same time. Sensing points **102** may be considered as mapping touch sensitive surface **101** into a coordinate system, for example, a Cartesian or polar coordinate system.

A touch-sensitive surface may, for example, be in the form of a tablet or a touch screen. To produce a touch screen, the capacitance sensing points and other associated electrical structures can be formed with a substantially transparent conductive medium, such as indium tin oxide (ITO). The number and configuration of sensing points **102** may be varied. The number of sensing points **102** generally depends on the desired resolution and sensitivity. In touch-screen applications, the number of sensing points **102** may also depend on the desired transparency of the touch screen.

Using a multi-touch sensing arrangement, like that described in greater detail below, signals generated at nodes **102** of multi-touch sensor **101** may be used to produce an image of the touches at a particular point in time. For example, each object (e.g., finger, stylus, etc.) in contact with or in proximity to touch-sensitive surface **101** can produce contact patch area **201**, as illustrated in FIG. **2**. Each contact patch area **201** may cover several nodes **102**. Covered nodes **202** may detect the object, while remaining nodes **102** do not. As a result, a pixilated image of the touch surface plane (which may be referred to as a touch image, a multi-touch image, or a proximity image) can be formed. The signals for each contact patch area **201** may be grouped together. Each contact patch area **201** may include high and low points based on the amount of touch at each point. The shape of contact patch area **201**, as well as the high and low points within the image, may be used to differentiate contact patch areas **201** that are in close proximity to one another. Furthermore, the current image can be compared to previous images to determine how the objects may be moving over time, and what corresponding action should be performed in a host device as a result thereof.

Many different sensing technologies can be used in conjunction with these sensing arrangements, including resistive, capacitive, optical, etc. In capacitance-based sensing arrangements, as an object approaches touch-sensitive surface **101**, a small capacitance forms between the object and sensing points **102** in proximity to the object. By detecting changes in capacitance at each of the sensing points **102** caused by this small capacitance, and by noting the position of the sensing points, a sensing circuit **103** can detect and monitor multiple touches. The capacitive sensing nodes may be based on self-capacitance or mutual-capacitance.

In self-capacitance systems, the "self" capacitance of a sensing point is measured relative to some reference, e.g., ground. Sensing points **102** may be spatially separated electrodes. These electrodes can be coupled to driving circuitry **104** and sensing circuitry **103** by conductive traces **105***a* (drive lines) and **105***b* (sense lines). In some self-capacitance embodiments, a single conductive trace to each electrode may be used as both a drive and sense line.

In mutual capacitance systems, the "mutual" capacitance between a first electrode and a second electrode can be measured. In mutual capacitance sensing arrangements, the sensing points may be formed by the crossings of patterned conductors forming spatially separated lines. For example, driving lines **105***a* may be formed on a first layer and sensing lines **105***b* may be formed on a second layer **105***b* such that the drive and sense lines cross or "intersect" one another at sensing points **102**. The different layers may be different substrates, different sides of the same substrate, or the same side of a substrate with some dielectric separation. Because of separation between the drive and sense lines, there can be a capacitive coupling node at each "intersection."

The arrangement of drive and sense lines can vary. For example, in a Cartesian coordinate system (as illustrated), the drive lines may be formed as horizontal rows, while the sense lines may be formed as vertical columns (or vice versa), thus forming a plurality of nodes that may be considered as having distinct x and y coordinates. Alternatively, in a polar coordinate system, the sense lines may be a plurality of concentric circles with the drive lines being radially extending lines (or vice versa), thus forming a plurality of nodes that may be considered as having distinct radius and angle coordinates. In either case, drive lines **105***a* may be connected to drive circuit **104**, and sensing lines **105***b* may be connected to sensing circuit **103**.

During operation, a drive signal (e.g., a periodic voltage) can be applied to each drive line **105***a*. When driven, the charge impressed on drive line **105***a* can capacitively couple to the intersecting sense lines **105***b* through nodes **102**. This can cause a detectable, measurable current and/or voltage in sense lines **105***b*. The relationship between the drive signal and the signal appearing on sense lines **105***b* can be a function of the capacitance coupling the drive and sense lines, which, as noted above, may be affected by an object in proximity to node **102**. Capacitance sensing circuit (or circuits) **103** may sense sensing lines **105***b* and may determine the capacitance at each node as described in greater detail below.

As discussed above, drive lines **105***a* can be driven one at a time, while the other drive lines are grounded. This process can be repeated for each drive line **105***a* until all the drive lines have been driven, and a touch image (based on capacitance) can be built from the sensed results. Once all the lines **105***a* have been driven, the sequence can repeat to build a series of touch images. However, in some embodiments of the present invention, multiple drive lines may be driven substantially simultaneously or nearly simultaneously, as described in U.S. patent application Ser. No. 11/619,466, titled "Simultaneous Sensing Arrangement," filed Jan. 3, 2007.

FIG. **3** illustrates a simplified schematic diagram of mutual capacitance circuit **300** corresponding to the arrangement described above. Mutual capacitance circuit **300** may include drive line **105***a* and sense line **105***b*, which can be spatially separated thereby forming capacitive coupling node **102**. Drive line **105***a* may be electrically (i.e., conductively) coupled to drive circuit **104** represented by voltage source **301**. Sense line **105***b* may be electrically coupled to capacitive sensing circuit **103**. Both drive line **105***a* and sense line **105***b* may, in some cases, include some parasitic capacitance **302**.

As noted above, in the absence of a conductive object proximate the intersection of drive line **105***a* and sense line **105***b*, the capacitive coupling at node **102** can stay fairly constant. However, if an electrically conductive object (e.g., a user's finger, stylus, etc.) comes in proximity to node **102**, the capacitive coupling (i.e., the capacitance of the local system) changes. The change in capacitive coupling changes the current (and/or voltage) carried by sense line **105***b*. Capacitance sensing circuit **103** may note the capacitance change and the position of node **102** and report this information in some form to processor **106** (FIG. **1**).

With reference to FIG. **1**, sensing circuit **103** may acquire data from touch surface **101** and supply the acquired data to processor **106**. In some embodiments, sensing circuit **103** may be configured to send raw data (e.g., an array of capacitance values corresponding to each sense point **102**) to processor **106**. In other embodiments, sensing circuit **103** may be configured to process the raw data itself and deliver processed touch data to processor **106**. In either case, the processor may then use the data it receives to control operation of computer system **107** and/or one or more applications running thereon. Various implementations along these lines are described in the applications referenced above, and include a variety of computer systems having touch pads and touch screens.

In some embodiments, sensing circuit **103** may include one or more microcontrollers, each of which may monitor one or more sensing points **102**. The microcontrollers may be application specific integrated circuits (ASICs) that work with firmware to monitor the signals from touch sensitive surface **101**, process the monitored signals, and report this information to processor **106**. The microcontrollers may also be digital signal processors (DSPs). In some embodiments, sensing circuit **103** may include one or more sensor ICs that measure the capacitance in each sensing line **105***b* and report mea-

sured values to processor **106** or to a host controller (not shown) in computer system **107**. Any number of sensor ICs may be used. For example, a sensor IC may be used for all lines, or multiple sensor ICs may be used for a single line or group of lines.

FIG. **4** illustrates at a high level process **400** for operating a multi-touch sensing arrangement, like that described above. The process may begin at block **401** where plurality of sensing points **102** can be driven. Following block **401**, the process flow can proceed to block **402**, where the outputs from sensing points **102** can be read. For example, a capacitance value for each sensing point **102** can be obtained. Following block **402**, the process can proceed to block **403** where an image or other form of data (signal or signals) of the touch at one moment in time can be produced and thereafter analyzed to determine where objects touching or in proximity to the touch sensor may be located. Following block **403**, the process can proceed to block **404**, where the current image or signal may be compared to one or more past images or signals to determine a change in one or more of the shape, size, location, direction, speed, acceleration, pressure, etc. for each object. This information can be subsequently used (in step **405**) to perform an action in computer system **107**, ranging from moving a pointer or cursor to complex gesture-based interactions.

1.2 Transflective LCDs

To better understand integration of touch-sensing technology with transflective LCDs, a brief introduction to transflective LCDs may be helpful. The following is an overview of a typical subpixel cell found in low temperature poly silicon (LTPS) transflective LCDs.

1.2.1 Circuit Basics

FIG. **5** shows a representative layout for an LTPS transflective subpixel **500**. Display information can be transferred to the subpixel's capacitors C_{ST} and C_{LC} (not shown) when a voltage representing the desired grey level is applied to the data bus **501** and the select line **502** is asserted. The select line **502** assertion level can be near the gate drive positive supply voltage. During the time when select line **502** is asserted, the voltage on V_{CST} (and V_{COM}, which is not shown) can be constant. All the circuit elements shown in FIG. **5**, which includes metal, poly, active, oxide, and ITO, can be fabricated on the LCD's bottom glass.

FIG. **6** shows a simplified model of a low temperature poly-silicon (LTPS) LCD **600**, including a top view **601** and a side view **602**. Top view **601** shows a see-through view of the V_{CST} routing **603** on the bottom glass **608** in both the display area **604** and the non-display area **605**. Side view **602** shows a cross section of the display.

Each display row can include horizontal traces for V_{CST} **606** and select (not shown). The select traces connect to gate drive circuitry made up of poly-silicon thin film transistors (p-Si TFTs), also not shown. The V_{CST} traces **606** can run from display edge to display edge and can connect together, e.g., as shown on the left. The V_{CST} traces can also connect, through a conductive dot **607**, to an ITO plane **609** on the top glass **610**. Typically, four conductive dots, one in each corner, can be used to connect the V_{COM} plane to V_{COM} Drive **611**. FIG. **6** shows only one dot **607** for simplicity. The voltage of V_{CST} and top glass ITO **609** can be set by V_{COM} Drive, which can be provided by the LCD driver IC (not shown). V_{CST} can also be connected to another drive source other than V_{COM} Drive **611**.

FIG. **7** illustrates a circuit diagram **700** for a subpixel and shows on which glass substrate various components can be fabricated. The bottom glass **701** can be the substrate for the integration of all the TFT pixel circuitry **703**. This can include the select line drivers and control logic. The bottom glass can also serve as the substrate for chip on glass (COG) components, such as the LCD driver (not shown). The upper electrode **704** of capacitor C_{LC} can be on the top glass **702**. Electrode **704** can be an ITO plane that covers the entire display area and forms the counter electrode to the bottom electrode **705** making C_{LC}. Upper electrode **704** can also connect, e.g., through four corner-located conductive dots **706** (only one shown), to V_{COM} Drive **707** on bottom glass **701**.

1.2.2 V_{COM}

Minimizing or eliminating the DC component of the voltage across the liquid crystal (LC) can reduce or eliminate some undesirable image artifacts. Therefore, the electric field across the LC can be periodically flipped while maintaining overall balance between the two field directions. Obtaining perfect electric field balance can be difficult, which can lead to small DC offsets that can produce unwanted image artifacts. To mask flicker due to DC offsets one of several inversion schemes known to those skilled in the art, such as dot inversion, can be employed.

1.2.3 Modulating V_{COM}

In some embodiments, it may be desirable to reduce the voltage range of data drivers. Therefore, the V_{COM} ITO plane and the V_{CST} traces can be modulated from ground to the supply rail to produce an AC voltage across the LC. However, this can restrict the available inversion methods to only the frame and line types.

V_{COM} Drive requirements can be fairly simple: its voltage can remain constant until the charge transfer has completed for a row of pixels, thus setting their grey levels. Once the display pixels are set, V_{COM} Drive can change without significantly affecting the LC state provided that parasitic pathways into and out of the subpixel remain small.

1.2.4 Constant V_{COM}

V_{COM} modulation can complicate the integration of touch sensing with LCDs. Various techniques for overcoming these complications are discussed below. An alternative method of minimizing the DC component of the voltage across the liquid crystal can be employed. One such alternative method is disclosed in J. Hector and P. Buchschacher, "Low Power Driving Options for an AMLCD Mobile Display Chipset", SID 02 Digest, pp. 695-697, which is incorporated by reference herein. This alternative method can allow V_{COM} to remain at a constant voltage, does not require large-voltage range data drivers, and can consume low power. Various advantages of using a constant V_{COM} are described below.

1.3 LCD Manufacturing

The manufacturing of LCD panels can be done using a batch process on large pieces of glass called mother-glass. Two pieces of mother-glass can be used: a top mother-glass, which can provide the substrate for the color filter, black matrix, and the upper electrode for C_{LC}; and a bottom mother-glass, which can provide the substrate for the active matrix TFT array and drive circuitry.

A basic process flow **800** for manufacturing LCDs is shown in FIG. **8**. Two large sheets of mother-glass, one for the top portion of the LCD and one for the bottom portion, can go through separate processing steps **801** and **802** before being aligned (block **803**), pressed together, and heated (block **804**) to cure seals between the top and bottom glass thereby producing a stable panel structure. The large panel can then be scribed and broken into smaller modules of the desired dimensions (block **805**). The individual modules can have their edges ground (block **806**) before being filled with liquid crystals (block **807**). After filling, the modules can be sealed (block **808**). Polarizers and electrical components can be

attached (block **809**). Flexible printed circuits (FPCs) can be attached to their substrates at or near the end of the process (block **810**).

A finished LCD module **900** is shown in FIG. **9**. The illustrated LCD module includes a chip on glass (COG) LCD driver **901** attached to the bottom glass **902** and also includes a flex on glass (FOG) flexible printed circuit (FPC) **903** attached to the bottom glass **902**. Both components can be electrically connected to bottom glass pads and held in place using an anisotropic conductive adhesive (ACA). Bottom glass **902** can extend beyond top glass **904** to provide a shelf **905** to mount the COG LCD driver **901**, the FPC **903**, and other supporting components. For handheld devices, the system processor board that manages the data and controls for the LCD can be placed under the backlight **906**.

Additional components used to support touch sensing (e.g., FPCs) can also attach to shelf **905**. Other attachment points are also possible. Details are discussed in conjunction with relevant embodiments described below.

1.4 Combining LCDs and Touch Sensing

The stack up diagrams discussed herein may be better understood in conjunction with the block diagrams of FIGS. **10** and **11**. Starting at the top, touch sense electrodes **1001**, **1101** can be deposited on the top (user side) of LCD top glass **1002**, **1102**. Touch drive electrodes **1003**, **1103** can be patterned on the bottom side of top glass **1002**, **1102**. Conductive dots **1004**, **1104** can connect drive electrodes **1003**, **1103** to driver **1005**, **1105**, which can also be located on bottom glass **1006**, **1106**. A shelf **1007**, **1107** on bottom glass **1006**, **1106** can house LCD driver chip **1008**, **1108** and the touch sensor driver chip **1009**, which can interface with each other (FIG. **10**) or be integrated into a single component (FIG. **11**). Finally, a FPC **1010**, **1110**, also bonded to the shelf can connect host device **1011**, **1111**.

1.5 Integration Options

Some embodiments of an LCD with integral touch sensing can include a top glass and a bottom glass. Display control circuitry can be formed on one and/or both of these glass layers to affect the amount of light that passes through a layer of liquid crystal between the two glass layers. The space between the external edges of the top and bottom glass is referred to herein as the liquid crystal module (LCM).

A typical LCD stackup **1200** typically includes additional layers, as illustrated in FIG. **12**. In FIG. **12**, a hard-coated PMMA layer **1201** can protect a LCD polarizer **1202** and the top glass **1203**, and a second polarizer **1205** can be included between bottom glass **1204** and a backlight **1206**.

Integrating touch-sensing technology into an LCD can be achieved using a variety of techniques. For instance, different touch-sensing elements and/or layers may be incorporated in a LCD display, with different embodiments varying in factors such as display and/or manufacturing cost, display size, display complexity, display durability, display functionality, and image display quality. In some embodiments, touch-sensing capability can be included into an LCD by integrating touch-sensing elements on the LCD display outside of the LCM. In other embodiments, touch-sensing elements can be added both inside the LCM (e.g., between the two glass layers) as well as outside of the LCM. In still other embodiments, a set of touch-sensing elements can be added only inside the LCM (e.g., between the two glass layers). The following sections describe a number of concepts for each of the above-mentioned embodiments.

1.6 Touch-Sensing Outside of the Liquid Crystal Module

Adding touch-sensing elements outside of the LCM allows touch sensing capabilities to be added to an LCD display with little to no impact on typical LCD manufacturing practices. For instance, a touch sensing system and LCD display system might be fabricated separately and integrated in a final step to form an LCD with touch sensing capabilities. Including the touch-sensing elements outside of the LCM can also allow the touch-sensing elements to be placed close to the area touched by the user, potentially reducing electrical interference between the display and touch components.

The following two embodiments, identified as Concept C and Concept N, can incorporate such external touch-sensing elements.

1.6.1 Concept C

One embodiment of the present invention, Concept C, uses the stackup illustrated in FIG. **13**, which allows the touch function to be separate from the LCD. In Concept C, two additional indium-tin oxide (ITO) layers (ITO1 **1301** and ITO2 **302**) can be patterned on top of the color filter (CF) plate (e.g., the top glass layer). These layers can be used for touch sense and touch drive elements of a touch sensor, e.g., a mutual-capacitance touch sensor. These ITO layers can be patterned into columns and/or rows (as shown in FIGS. **1** and **2**, and described in the preceding multi-touch sensing description), and can be separated by a dielectric **1305**, such as a glass substrate or a thin (e.g., 5-12 mm) SiO_2 layer.

In some embodiments, the electrode pattern used in the touch elements may be optimized to reduce visual artifacts. For instance, FIG. **14** illustrates a diamond electrode pattern, which can reduce visual artifacts.

In Concept C, the FPCs that carry touch sensing data can attach to the top surface of the top glass **1303**.

1.6.2 Concept N

One embodiment of the present invention, Concept N, can implement capacitive sensing on the outside surface of the color filter (CF) plate using self-capacitance sensing. Concept N can use the stackup illustrated in FIG. **15**, in which the touch sensing components can be located on top of CF plate **1501** (top glass). LCDs based on Concept N can be built without altering standard LCD processing by forming TFTs **1503** with two metal layers and patterned ITO **1500** on CF plate **1501** using, for example, the same LTPS process used for conventional TFT plate **1504**. Touch ITO layer **1500** can be patterned into a plurality of touch pixels **1612** (FIG. **16**). Touch ITO layer **1500** can be protected by a plastic cover **1702** (shown in FIG. **17**) that can also serve as the surface touched by a user.

FIG. **16** illustrates a self-capacitance touch pixel circuit for Concept N. Each ITO touch pixel **1612** can be connected to two TFTs, e.g., an input TFT **1604** and an output TFT **1608**. The input TFT **1604** can charge ITO touch pixel **1612**, while output TFT **1608** can discharge ITO touch pixel **1612**. The amount of charge moved can depend on the ITO touch pixel's **1612** capacitance, which can be altered by the proximity of a finger. Further details of self-capacitance touch-sensing are described above and in U.S. Pat. No. 6,323,846, titled "Method and Apparatus for Integrating Manual Input," issued Nov. 27, 2001, which is hereby incorporated by reference in its entirety.

In one embodiment, an output column **1610** can be shared by touch pixels vertically, and output gates **1606** can be shared by touch pixels horizontally, as shown in FIGS. **16** and **18** for output column **1610** 'CO' and output gates **1606** 'R3'. FIG. **19** shows a detailed layout of a touch pixel.

1.7 Partially-Integrated Touch-Sensing

Integrating touch-sensing elements inside the LCM can provide a variety of advantages. For example, touch-sensing elements added inside the LCM could "reuse" ITO layers or other structures that would otherwise be used only for display functions to also provide touch-sensing functionality. Incor-

porating touch-sensing features into existing display layers can also reduce the total number of layers, which can reduce the thickness of the display and simplify the manufacturing process.

The following embodiments can include touch-sensing elements inside and outside the LCM. Because integrating touch-sensing elements within the LCM may result in noise and interference between the two functions, the following designs can also include techniques that allow elements to be shared while reducing or eliminating any negative effects on the display and/or touch-sensing outputs caused by electrical interference between the two.

1.7.1 Concept A

Concept A can use the basic stackup **2000** illustrated in FIG. **20**, with a multi-touch capable ("MT") ITO sense layer (ITO1) **2001** positioned on the user side of top glass **2002**, between top glass and polarizer **2003**. Starting from the top, the touch sensing layers can include: ITO1 **2001** (an ITO layer that can be patterned into N sense (or drive) lines) and ITO2 **2004** (an ITO layer that can be patterned into M drive (or sense) lines). ITO2 layer **2004** can also serve as the V_{COM} electrode for the LCD.

1.7.1.1 Concept A: Touch Sensor Electrodes

The touch sensor electrode array can include two layers of patterned ITO as illustrated in FIG. **21** (left side). FIG. **21** is a simplified view of one possible implementation of touch sensor electrodes. The layer closer to the viewer, ITO1 **2101**, can be the touch output layer also called the sense layer or the sense lines. The touch drive layer **2102** can be located on layer ITO2. ITO2 can also form the upper electrode of the capacitor C_{LC} (see FIG. **7**). FIG. **21** (right side) also shows a detail of three sense pixels **2103***a*, **2103***b*, and **2103***c* along with associated capacitors. Both the sense and drive lines can have a 5 mm pitch with a 10 to 30 micron gap. The gap can be just small enough to be invisible to the naked eye, but still large enough to be easy to etch with a simple proximity mask. (Gaps in the figure are greatly exaggerated.)

FIG. **22** shows one possible physical implementation for Concept A, with top view **2201** and side view **2202** of cabling and subsystem placement. Top view **2201** shows the approximate positions of FPC **2203** (discussed in greater detail below) in an unfolded state. FIG. **22** represents just one physical implementation where a discrete touch level shifter/decoder COG can be used. Alternative architectures that minimize the number of discrete touch components are discussed below. For mechanical stability, the FPC can be bent, as shown in side view **2202**, so that stress on the T-tab **2204** and B-tab **2205** bonds are minimized. FIG. **23** is a high-level block diagram showing one possible architecture **2300** of the main bottom glass components, and the segmented ITO2 layer **2301** on the top glass used for touch sensing. The segments **2302** of ITO2 on the top glass each connect through a conductive dot **2303** to a corresponding pad on the bottom glass. The pads on the bottom glass can each connect to the touch driver, discussed below.

1.7.1.2 Concept A: Conductive Dots

Conductive dots located in the corners of the LCD can be used to connect the V_{COM} electrode to drive circuits. Additional conductive dots can be used to connect the touch drive lines to touch-drive circuitry. The dots can have sufficiently low resistance so as to not add significantly to the phase delay of the touch drive signals (discussed in greater detail below). This can include limiting the resistance of a conductive dot to 10 ohms or less. The size of the conductive dot can also be limited to reduce the real estate needed.

As shown in FIG. **24**, elongated conductive dots **2401** can be used to reduce both dot resistance and real estate requirements. Touch drive segments **2402** can be about 5 mm wide, which can provide a large area to reduce dot resistance.

1.7.1.3 Concept A: Flex Circuit and Touch/LCD Driver IC

A conventional display (e.g., FIG. **9**) can have an LCD Driver integrated circuit (IC) **901**, that can control low-level operation of the display. A system host processor can exercise high-level control over the display by sending commands and display data to LCD Driver **901**. Multi-touch systems can also have one or more driver ICs. One exemplary multi-touch capable system, described in the incorporated references includes three ICs: a multi-touch controller, an external level-shifter/decoder, and controller, such as an ARM processor. The ARM processor can exercise low-level control over the multi-touch controller, which can subsequently control the level-shifter/decoder. A system host processor can exercise high-level control over and receive touch data from the ARM processor. In some embodiments, these drivers can be integrated into a single IC.

FIG. **25** shows an example high-level block diagram for a Touch/LCD Driver integrated circuit **2501**. The IC has two main functions: 1) LCD control and update, and 2) touch scanning and data processing. These two functions can be integrated by an LCD driver portion **2502** for LCD control and an ARM processor **2503** and multi-touch controller **2504** for touch scanning and processing. The touch circuits can be synchronized with LCD scanning to prevent one from interfering with the other. Communication between the host and either the LCD Driver or the ARM processor can be through the host data and control bus **2505**. A more fully integrated Touch/LCD Driver is discussed below.

As shown in FIG. **26**, an FPC **2601** that brings together the signals for the various touch and display layers can have three connector tabs, a T-tab **2602**, a B-tab **2603**, and a host tab **2604**. The T-tab can connect to sense line pads on the top glass. The T-tab traces **2605** can connect to corresponding pads on B-tab **2603**, which can also attach to the bottom glass. B-tab **2603** can also provide pass-through routes **2606** from Host tab **2604** that can enable the host to connect to the Touch/LCD Driver IC. FPC **2601** can also provide the substrate for various components **2607** supporting touch and LCD operation, and can also connect to the backlight FPC through two pads **2608**.

The FPC **2601** can be TAB bonded to both the top and bottom glass. Alternatively, other bonding methods can be employed.

1.7.1.4 Concept A: Touch Drive Integrated on Bottom Glass

A level shifter/decoder chip, along with a separate voltage booster (e.g., a 3V to 18V booster), can provide high voltage drive circuitry for touch sensing. In one embodiment, the Touch/LCD Driver IC can control the level shifter/decoder chip. Alternatively, the voltage booster and/or the level shifter/decoder can be integrated into the Touch/LCD Driver IC. For example, such integration can be realized using a high voltage (18V) LTPS process. This can allow integrating the level shifter/decoder chip and the voltage booster into the periphery of the bottom glass. The level shifter/decoder can also provide the voltages for V_{COM} modulation and touch drive as discussed below.

1.7.1.5 Concept A: Sharing Touch Drive with LCD V_{COM}

As discussed above, Concept A can add one layer of ITO to a standard LCD stackup, which can function as the touch sense lines. The touch drive layer can be shared with the LCD's V_{COM} plane, also denoted ITO2. For display operation, a standard video refresh rate (e.g., 60 fps) can be used. For touch sensing, a rate of at least 120 times per second can be used. However, the touch scanning rate can also be reduced

to a slower rate, such as 60 scans per second, which can match the display refresh rate. In some embodiments, it may be desirable to not interrupt either display refresh or touch scanning. Therefore, a scheme that can allow the sharing of the ITO2 layer without slowing down or interrupting display refresh or touch scanning (which can be taking place at the same or different rates) will now be described.

Simultaneous display update and touch scanning is illustrated in FIG. **27**. In this example, five multi-touch drive segments **2700**, **2701**, **2702**, **2703**, **2704** are shown. Each touch drive segment can overlap M display rows. The display can be scanned at 60 frames per second while the multi-touch sensor array can be scanned at 120 times per second. The illustration shows the time evolution of one display frame lasting 16.67 msec. The area of the display currently being updated preferably should not overlap an active touch drive segment.

Patch **2705** indicates where the display rows are being updated. Patch **2706** indicates an active touch drive segment. In the upper left corner of FIG. **27**, at the start of the display frame the first M/2 display lines can be refreshed. At the same time, touch drive segment 1 **2701** can be driven for the purpose of touch sensing. Moving to the right in the figure, at time t=1.67 ms, the next picture shows the next M/2 display rows being refreshed, while simultaneously touch drive segment 2 **2702** can be driven. After about 8.3 msec of this pattern, (start of second row) each touch drive segment can have been driven once, and half the display will have been refreshed. In the next 8.3 msec, the entire touch array can be scanned again, thus providing a scanning rate of 120 fps, while the other half of the display is updated.

Because display scanning typically proceeds in line order, touch drive segments can be driven out of sequential order to prevent an overlap of display and touch activity. In the example shown in FIG. **27**, the touch drive order was 1,2,3,4,0 during the first 8.3 msec and 1,2,4,3,0 in the second 8.3 msec period. The actual ordering can vary depending on the number of touch drive segments and the number of display rows. Therefore, in general, the ability to program the order of touch drive usage may be desirable. However, for certain special cases, a fixed sequence ordering may be sufficient.

It may also be desirable (for image quality reasons) to separate the active touch drive segment farther away from the area of the display being updated. This is not illustrated in FIG. **27**, but can easily be done given a sufficient number of touch drive segments (e.g., 6 or more segments).

Such techniques can effectively allow different refresh rates for the display and touch-sense elements without requiring multiplex circuitry to support a high-frequency display drive element.

1.7.1.6 Concept A: V_{CST} Drive Options

As illustrated in FIG. **7**, V_{CST} and V_{COM} can be connected together and can thus be modulated together to achieve the desired AC waveform across the LC. This can help achieve proper display refresh when using V_{COM} modulation. When V_{COM} is used for touch drive, it is not necessary to also modulate V_{CST}. This can be considered as the Open Circuit V_{CST} Option, described below. However, if V_{CST} is modulated with V_{STM}, the capacitive load on the touch drive signal, V_{CST}, can be reduced, which can lead to a smaller phase delay in the touch signal. This can be considered as the Drive V_{CST} Option, described below.

FIG. **28** illustrates the Open Circuit V_{CST} Option. Bottom drawing **2802** illustrates how one touch drive segment **2803** can overlap M display rows **2804**. Touch drive segments **2803** located on the top glass can connect electrically to circuits on the bottom glass through a conductive dot **2805**. The M V_{CST} lines of the M rows under the touch drive segment can connect together on the edge of the display **2806**. Top drawing **2801** shows the basic circuit for a subpixel with its separate storage capacitor C_{ST}. Area **2807** in the upper drawing can represent M contiguous rows of subpixels covered by a single touch drive segment. Display operation and touch sensing for a particular touch drive/display group can occur at different times, as discussed above. When the display driver is ready to set the state of the subpixels in the M rows, switches **2808**, **2809** can connect V_{COM} Drive **2810** to the M V_{CST} lines **2804** and to the touch drive segment (V_{COM}). The V_{COM} Drive voltage can be set by the LCD driver to either ground or the supply rail, depending on the phase of the inversion. Later, when this touch drive/display group is available for touch usage, switches **2808**, **2809** can connect the touch drive segment to V_{STM} **2811** and disconnect V_{CST} from V_{COM} Drive **2810**, thus leaving it in the open state **2812**.

FIG. **29** illustrates the Drive-V_{CST} option. Bottom drawing **2902** illustrates how one touch drive segment **2903** can overlap M display rows **2904**. The touch drive segments **2903** located on the top glass can connect electrically to circuits on the bottom glass through conductive dot **2905**. The M V_{CST} lines of the rows under a particular touch drive segment can connect together on the edge of the display **2906**. Top drawing **2901** shows the basic circuit for a subpixel having a separate storage capacitor C_{ST}. Area **2907** in the upper drawing can represent M contiguous rows of subpixels covered by a single touch drive segment. Display operation and touch sensing can occur at different times. When the display driver is ready to set the state of the subpixels in the M rows, switch **2908** can connect V_{COM} Drive **2910** to the M V_{CST} lines **2904** and to the touch drive segment (V_{COM}). The V_{COM} Drive **2910** voltage can be set by the LCD driver to typically either ground or a supply rail depending on the phase of the inversion. Later, when this touch drive/display group is available for touch usage, switch **2908** can connect the V_{CST} and the touch drive segment (V_{COM}) to V_{STM} **2911**.

1.7.1.7 Concept A: MT-Drive Capacitive Loading

The capacitive load on Concept A's touch drive line can be high, for example, because of the thin (e.g., ~4 μm) gap between the touch drive layer and the bottom glass, which can be covered by a mesh of metal routes and pixel ITO. The liquid crystals can have a rather high maximum dielectric constant (e.g., around 10).

The capacitance of the touch drive segment can affect the phase delay of the stimulating touch pulse, V_{STM}. If the capacitance is too high, and thus there is too much phase delay, the resulting touch signal can be negatively impacted. Analysis performed by the inventors indicates that keeping ITO2 sheet resistance to about 30 ohms/sq or less can keep phase delay within optimal limits.

1.7.1.8 Concept A: Electrical Model and V_{COM}—Induced Noise

Because ITO2 can be used simultaneously for both touch drive and LCD V_{COM}, modulating V_{COM} can add noise to the touch signal.

For example, a noise component may be added to the touch signal when one touch drive segment is being modulated with V_{COM} at the same time another touch drive segment is being used for touch sensing. The amount of added noise depends on the phase, amplitude, and frequency of the V_{COM} modulation with respect to V_{STM}. The amplitude and frequency of V_{COM} depend on the inversion method used for the LCD.

FIG. **30** shows an electrical model for the situation where touch drive **3001** is used for both touch sensing and LCD

V_{COM} modulation. The model shows the input path through which V_{COM} modulation can add noise to the input of charge amplifier **3002**.

In some embodiments, charge amplifier **3002** may need additional headroom to accommodate noise induced by V_{COM} **3003**. Additionally, subsequent filtering circuits (e.g., synchronous demodulators, not shown) may need to remove the noise signal due to the V_{COM} modulation.

1.7.1.9 Concept A: V_{STM} Effects

V_{STM} modulation, under certain conditions, can have a negative impact on the voltages of the subpixels underneath the touch drive segment being modulated. If the subpixel RMS voltage changes appreciably, display artifacts may be produced. One or more of the following techniques may be employed to minimize display distortion that may result.

Touch drive from two sides can reduce the distortion of the LC pixel voltage. As shown in FIG. **31**, touch drive from both sides can be achieved by employing the existing low resistance C_{ST} routes **3101** on the bottom glass by connecting V_{STM} to C_{ST} lines on both sides through conductive dots **3102**. Alternatively, single-ended touch drive can produce a pixel offset voltage that is uniform for all pixels, which can be reduced or eliminated by adjusting the data drive levels. Also, reducing the ITO sheet resistance can help reduce display artifacts. Finally, the phase and frequency of V_{STM} can also be tied to the phase and frequency of V_{COM} to reduce the amount of noise in the touch signal.

1.7.1.10 Concept A: Impact on Manufacturing

The manufacturing process for Concept A can include additional steps relative to a typical LCD manufacturing process. Some may be new steps entirely and some may be modifications to existing steps. FIG. **32** shows a manufacturing process flow for Concept A. Blocks **3201**, **3202**, and **3204** represent new steps, and blocks **3205**, **3206**, and **3207** represent a modified step, both relative to a conventional LCD manufacturing processes (e.g., that of FIG. **8**).

Applying and patterning ITO1 (blocks **3201**, **3202**) can be done using known methods. The ITO can be protected during the remainder of the LCD processing. Photoresist can be used to provide a removable protective coating. Alternatively, silicon dioxide can provide a permanent protective covering. ITO2 can be applied and patterned (block **3204**) to form the touch drive segments in similar fashion.

An analysis of phase delay indicates that the sheet resistance of ITO1 and ITO2 can be as high as 400 ohms/square for small displays (<=4" diagonal), provided that the capacitive loading on either plane is small. As discussed above, the capacitive loading with Concept A can be of such magnitude that it may be desired to limit the maximum sheet resistance for ITO2 to around 30 ohms/square or less.

1.7.2 Concept A60

Concept A60 can be physically similar to Concept A and can provide a different approach to the problem of synchronizing display updates and touch scanning. This can be accomplished by using the 1-line inversion of V_{COM} as the stimulus for the touch signal (i.e., V_{STM}). This is illustrated in FIG. **33**, which shows how a single touch drive segment **3301** can be modulated while other touch drive segments can be held at a constant voltage. With this approach, the problem of removing the unwanted V_{COM}-induced noise from the touch signal can be eliminated. Furthermore, it is not necessary to spatially separate display updating and touch sensor scanning. However, using this approach, demodulation can be done at a single frequency (i.e., the V_{COM} modulation frequency, e.g., ~14.4 kHz) as opposed to the multi-frequency demodulation described in U.S. patent application Ser. No. 11/381,313, titled "Multipoint Touch Screen Controller," filed May 2, 2006, incorporated by reference herein. Furthermore, using this approach, the touch sensor scan rate can be fixed at the video refresh rate (e.g., 60 per second).

1.7.3 Concept B

Concept B, illustrated in FIG. **34**, can be similar to Concept A, sharing many of the same electrical, cabling, and structural aspects. However, Concept B can integrate the touch drive layer into the V_{COM} layer. Concept B can therefore differ in the number and stack position of ITO layers used for LCD and touch sensing. Because of the similarities, Concept B will now be described by highlighting differences between Concepts A and B.

Concept B can split the shared ITO2 layer of Concept A into two ITO layers, using one layer for touch sensing (ITO2) **3402** and one layer for the LCD V_{COM} (ITO3) **3403**. Starting from the top, layers used for touch sensing can include: ITO1 **3401**, an ITO layer that can be patterned into N touch sense lines; ITO2 **3402**, an ITO layer that can be patterned into M touch drive lines; and ITO3 **3403**, an ITO layer that can serve as the V_{COM} electrode for the LCD. Touch drive layer (ITO2) **3402** can be deposited on the lower surface of top glass **3404**, above the color filter **3405**.

Separating V_{COM} from touch drive elements can reduce interference.

1.7.3.1 Concept B: Touch Sensor Electrodes

Concept B can include touch sensor electrodes substantially similar to those described above for Concept A.

1.7.3.2 Concept B: Conductive Dots

As in Concept A, Concept B can use additional conductive dots **3406**, which can be located in the corners of the LCD, to connect the touch drive segments to dedicated circuitry. Because V_{COM} need not be shared with touch sensing, Concept B can retain the corner dots that connect V_{COM} to its drive circuitry. Additionally (as discussed below), Concept B may add even more conductive dots for V_{COM}.

1.7.3.3 Concept B: Flex Circuit and Touch/LCD Driver IC

Concept B can use a FPC and Touch/LCD Driver IC substantially similar to those described for Concept A.

1.7.3.4 Concept B: Synchronization with LCD Scanning

For Concept B, although the V_{COM} layer can be separate from the touch drive layer, it still may be desired to synchronize touch scanning with LCD updating to physically separate the active touch drive from the display area being updated. The synchronization schemes previously described for Concept A can also be used for Concept B.

1.7.3.5 Concept B: MT-Drive Capacitive Loading

As with Concept A, the capacitive load on Concept B's touch drive line can be high. The large capacitance can be due to the thin (e.g., ~5 μm) dielectric between touch drive (ITO2) **3402** and V_{COM} plane (ITO3) **3403**. One way to reduce undesirable phase delay in the touch stimulus signal can be to lower the ITO drive line resistance through the addition of parallel metal traces. Phase delay can also be reduced by decreasing the output resistance of the level shifter/decoder.

1.7.3.6 Concept B: Electrical Model and V_{COM}—Induced Noise

Because the entire V_{COM} plane can be coupled to the touch drive layer, multi-touch charge amplifier operation may be disrupted by noise induced by V_{COM} modulation. To mitigate these effects Concept B can have a constant V_{COM} voltage.

Conversely, the coupling between ITO2 **3402** and ITO3 **3403** (V_{COM} and touch drive) can cause interference with the V_{COM} voltage that can cause the wrong data voltage can be stored on the LC pixel. To reduce the modulation of V_{COM} by V_{STM}, the number of conductive dots connecting V_{COM} to the bottom glass can be increased. For example, in addition to

V_{COM} dots at each corner of the viewing area, conductive dots can be placed at the middle of each edge.

Distortion resulting from V_{COM}-V_{STM} coupling can be further reduced by synchronizing V_{STM} with V_{COM} and turning off the pixel TFT at just the right time. For example, if the line frequency is 28.8 kHz, and the touch drive frequency is a multiple of this (e.g., 172.8, 230.4 and 288 kHz) then the V_{COM} distortion can have the same phase relationship for all pixels, which can reduce or eliminate visibility of the V_{COM} distortion. Additionally, if the gates of the pixel TFTs are turned off when the distortion has mostly decayed, the LC pixel voltage error can be reduced. As with Concept A, the phase and frequency of V_{STM} can be tied to the phase and frequency of V_{COM} to reduce the amount of noise in the touch signal.

1.7.3.7 Concept B: Impact on Manufacturing

As with Concept A, Concept B can also add steps to the LCD manufacturing process. FIG. **35** shows a manufacturing process flow for Concept B, in which blocks **3501**, **3502**, **3503**, and **3504** represent new steps relative to a conventional LCD manufacturing process (e.g., that depicted in FIG. **8**), and blocks **3506**, **3507**, **3508**, and **3509** represent a modification to an existing step (e.g., also relative to FIG. **8**).

ITO1 can be applied (block **3501**) and patterned (block **3502**) using known methods, as with Concept A. The sheet resistance of ITO1 and ITO2 can also be substantially similar to that described for Concept A. For Concept B, the ITO2 layer deposition (block **3503**) can be routine because it can be directly applied to glass. Electrical access between the ITO2 layer and the bottom glass for the conductive dots that connect to the touch drive segments can be easily accomplished by etching using a shadow mask (block **3504**).

ITO3 (e.g., the LCD's V_{COM} layer), which can have a sheet resistance between 30 and 100 ohms/square, can also be applied (block **3505**) using conventional methods. However, as discussed above, V_{COM} voltage distortion can be reduced by reducing the resistance of the ITO3 layer. If necessary, lower effective resistance for ITO3 can be achieved by adding metal traces that run parallel to the touch drive segments. The metal traces can be aligned with the black matrix so as to not interfere with the pixel openings. The density of metal traces can be adjusted (between one per display row to about every 32 display rows) to provide the desired resistance of the V_{COM} layer.

1.7.4 Concept B'

Concept B' can be understood as a variation of Concept B that eliminates the ITO2 drive layer and instead uses a conductive black matrix (e.g., a layer of CrO_2 below the top glass) as the touch drive layer. Alternatively, metal drive lines can be hidden behind a black matrix, which can be a polymer black matrix. This can provide several benefits, including: (1) eliminating an ITO layer; (2) reducing the effect of V_{STM} on the V_{COM} layer; and (3) simplifying the manufacturing process. The manufacturing process can be simplified because using the black matrix for touch drive can eliminate the need to pattern an ITO layer above the color filter.

FIG. **36** shows a side view **3601** and top view **3602** of Concept B'. As can be seen, side view **3601** looks very much like a standard LCD stack-up, except for the top layer of ITO **3603** used for touch sensing. The bottom diagram of FIG. **36** shows how the black matrix **3604** can be partitioned into separate touch drive segments. The mesh pattern can follow the pattern of a conventional black matrix, except that each drive segment can be electrically isolated from the other segments. To compensate for reduced touch signal strength that can be caused by using the black matrix mesh for touch drive, the charge amp gain can be increased (e.g., about 4×).

Because the touch sensing layer may not be shielded from the V_{COM} layer, V_{COM} modulation may interfere with the touch signal. Furthermore, touch drive may still interfere with the V_{COM} voltage. Both of these issues can be addressed by segmenting the V_{COM} layer as described with Concept A and/or spatially separating display updating and touch sensing as described above. A constant V_{COM} voltage can also be used to address these issues.

1.7.5 Concept K

Concept K is illustrated in FIGS. **37** (circuit diagram) and **38** (stackup diagram). Concept K utilizes the fact that select pulses in the TFT LCD can be partially transferred to the pixel ITO when the C_{ST}-on-gate configuration is used.

As shown in the display stackup of FIG. **38**, the viewer can face active array plate **3801** rather than CF plate **3802**. ITO pixels **3803** on the active array can provide the V_{STM} pulses for the touch sensor, with the display rows alternatively being used for V_{STM} pulses and for display addressing. ITO sense layer **3804** on plastic polarizer **3805** can be laminated to the back of array plate **3801** to provide the touch-sensing layer. A thin glass layer (e.g., 0.2 mm) can help improve the signal-to-noise ratio.

During display updates, rows can be selected individually to update the pixel data (as shown in FIG. **39**). To generate V_{STM} for touch sensing, multiple rows **4001** can be selected simultaneously, while high data voltage **4003** can be applied to the column lines **4002** to keep the TFTs off (as shown in FIG. **40**). The column driver can adjust the timing of data signals from a display memory to accommodate the touch drive intervals.

In one embodiment, a touch pulse sequence can simultaneously pulse about 30 rows **4001** during a touch scan interval. FIG. **41** shows the effect of a touch drive pulse (V_{STM}) on the subpixel voltages of the LCD. The added voltage from the V_{STM} pulses can be compensated by a DC offset of V_{COM} and/or gamma correction of the display data grey levels.

Concept K can allow a number of advantages. Because the display pixels and touch sensors share drive circuitry, the level shifter/decoder may be eliminated. Additionally, a conventional CF plate can be used. Furthermore, no extra conductive dots between the top and bottom glass are needed. Busline reflections may increase the reflectance (R) for portions of the display, and hence call for the use of an extra film under the buslines (such as CrO under Cr) that can reduce R.

1.7.6 Concept X'

Concept X' is illustrated in FIG. **42** (circuit diagram) and FIG. **43** (stackup diagram). Concept X' utilizes the fact that V_{STM} pulses can be similar to gate pulses for the TFT pixel switches (e.g., a 15 to 18 V swing). In Concept X', the touch drive segments **4301** can be part of the LTPS active array and can form the counter electrode for the pixel storage capacitors C_{ST}. C_{ST} can be formed between two ITO layers **4301**, **4302**. In this embodiment, the active array plate **4303**, rather than the color filter plate **4304** can be on the user side of the display.

As shown in FIG. **42**, a pulse sequence with three different frequencies **4201** for V_{STM} can be shared by three rows of pixels **4202** to select those rows. The ITO touch drive segments **4203** can be patterned under a set of rows adjacent to addressed rows. Touch drive segments **4203** can be connected to GND by TFTs **4204** when not connected to V_{STM}.

Changes that can be made to the processing steps to construct Concept X' can include the following. First, a patterned sense ITO can be added on the outside of the array substrate. Second, SiO_2 protection can be added on the sense ITO during LTPS processing. Protective resist could also be used.

Third, touch drive ITO can be deposited and patterned under the SiO_2 barrier layer (which can be found in typical LTPS processes) for the LTPS array. Finally, vias can be patterned in the barrier SiO_2 to contact the touch drive ITO layer. This step can be combined with a subsequent process step.

Concept X' can allow a number of advantages. For example, because the display and touch sensors share drive circuitry, the level shifter/decoder chip can be eliminated. Additionally, no change to the CF plate is required, so conventional color filter processing can be used. Further, because the storage capacitor C_{ST} can be located between two ITO layers, high transmittance can be achieved. Another advantage can be that extra conductive dots between the array plate **4303** and CF plate **4304** may be eliminated.

1.8 Fully-Integrated Touch-Sensing

A third set of embodiments of the present invention fully integrate the touch-sensing elements inside the LCM. As with partially-integrated touch-sensing, existing layers in the LCM can serve double duty to also provide touch-sensing functionality, thereby reducing display thickness and simplifying manufacturing. The fully-integrated touch-sensing layers can also be protected between the glass layers.

In some embodiments, the fully-integrated LCD can include a V_{COM} layer similar to those described in previous embodiments. In other embodiments, the fully-integrated touch-sensing LCD can include in-plane-switching (IPS) LCD constructions, which are described in further detail in the following sections.

1.8.1 Fully-Integrated V_{COM}-Based LCDs

1.8.1.1 Concept A'

Concept A' can be considered as a variation of Concept A that eliminates the ITO sense layer (ITO1 **2001** in FIG. **20**) in favor of a conductive black matrix layer (below the top glass) used as the touch sense layer. Alternatively, metal sense lines can be hidden behind a black matrix, which can be a polymer black matrix. As a result, Concept A' can also eliminate the T-tab on the FPC and the corresponding bonding to the top glass. Touch sense lines can be routed through conductive dots to the bottom glass and can directly connect to the Touch/LCD Driver chip. Furthermore, the FPC can be a standard LCD FPC. Elimination of manufacturing steps and components can lead to a reduction in cost compared to Concepts A and B.

FIG. **44** shows one way substitution of a conductive black matrix for the touch sense layer can be accomplished. FIG. **44** includes a side view **4401** of the upper portion of a single pixel with its black matrix **4403** running between primary color sections **4404**. Touch drive segment **4405** can be separated from black matrix lines **4403** by planarizing dielectric layer **4406**. FIG. **44** also shows top view **4402** of the display with black matrix lines **4403** running vertically. Approximately 96 black matrix lines (e.g., 32 pixels worth) can connect together into the negative terminal of charge amplifier **4907**. Touch drive segments **4405** can be driven as described above. A finger approaching top glass **4408** can perturb the electric field between vertical black matrix lines **4403** and touch drive segment **4405**. The perturbation can be amplified by charge amplifier **4407** and further processed as described elsewhere herein.

Because of the depth of touch sense lines **4403** in the display, the minimum distance between a finger or touch object and sense lines **4403** may be limited. This can decrease the strength of the touch signal. This can be addressed by reducing the thickness of layers above the touch sense layer, thereby allowing a closer approach of the finger or other touch object to the sense lines.

1.8.1.2 Concept X

Concept X is illustrated in FIGS. **45** and **46**. The stack-up for Concept X, shown in FIG. **45**, can be basically identical to that of a standard LCD. Touch sense layer **4501** can be embedded within the V_{COM} layer (ITO2), which can serve the dual purpose of providing the V_{COM} voltage plane and acting as the output of the touch sensor. The touch drive layer can also be embedded within an existing LCD layer. For example, touch drive can be located on bottom glass **4503** and can be part of the LCD select line circuitry (see FIG. **5**). The select circuit can thus serve a dual purpose of providing gate signals for the subpixel TFTs and the touch drive signal V_{STM} FIG. **46** is a top view of Concept X showing one possible arrangement of the touch sense layer with its floating pixels **4601** embedded in the V_{COM} layer.

1.8.1.3 Concept H

Concept H is illustrated in FIGS. **47-50**. Concept H need not include any ITO outside the top glass or plastic layer of the display. As a result, the manufacturing processes can be very similar to existing display manufacturing processes.

As shown in FIG. **47**, the touch-sensing part of the screen can be a transparent resistive sheet **4701**, for example, a glass or plastic substrate having an unpatterned layer of ITO deposited thereon. The V_{COM} layer of the display may be used for this touch-sensing part. Because this layer need not be patterned, a photolithography step can be eliminated from the manufacturing process as compared to some embodiments discussed above. For purposes of reference herein, the sides will be referred to as north, south, east, and west as indicated in the drawing.

A plurality of switches **4702** can be arranged about the perimeter of the resistive sheet. These switches can be implemented as TFTs on glass. Also shown are a plurality of conductive dots **4703**, at each switch location, that can connect V_{COM} (on the top glass) to the TFT layer on the bottom glass, in the border region of the display. Switches **4702** can be connected together into two busses, for example, with the north and east switches connected to one bus **4704** and the south and west switches connected to a second bus **4705**.

For touch sensing, switch **4702** can be operated as follows. The north and south switches can be used to measure the Y-direction capacitance. The left and right side switches can be used to measure the X-direction capacitance. The switches at the northeast and southwest corners can be used for both X and Y measurement. Capacitance can be measured by stimulating resistive sheet **4701** with a modulation waveform V_{MOD}, illustrated in FIG. **49**. The current (i.e., charge) required to drive the sheet to the desired voltage can be measured and used to determine the location of the touch.

Specifically, as illustrated in the waveforms for FIG. **49**, in the absence of touch, the baseline capacitances **4902** can indicate the current (charge) required to stimulate the sheet **4701** to the V_{MOD} voltage. In the presence of touch, greater current **4903** (charge) may be required because of the capacitance of the finger. This greater current is illustrated in the lower group of waveforms. The position of the touch can then be determined by simple mathematical combination of the baseline and signal waveforms as illustrated in FIG. **49**.

An equivalent circuit for the touch screen during the X-direction (i.e., east-west) measurement is illustrated in FIG. **48**. C_PARA **4801** can be the distributed parasitic resistance of the sheet, and C_FINGER **4802** can be the capacitance of a touch, e.g., located approximately 75% of the way to the east side. The block diagrams indicate how the plate can be driven to V_{MOD} and how the charge can be measured, combined, processed, and sent to the host.

FIG. **50** illustrates how Concept H can be integrated with an LCD. Specifically, conductive dots **5001** can connect to the TFT layer, which can allow resistive sheet **5002** (V_{COM}) to be modulated for display operation. Touch sensing operation and display operation can be time multiplexed. For example, assuming a 60 Hz screen refresh rate, corresponding to a 16 ms LCD update period, part of this time can be used for writing information to the LCD, and another part can be used for touch sensing. During LCD updating, V_{MOD} can be V_{COM} from the LCD driver circuit. During touch sensing, waveforms having different frequencies and amplitudes may be used depending on the exact details of the touch system, such as desired SNR, parasitic capacitances, etc. It should also be noted that the touch-sensing circuitry in this embodiment, illustrated in block diagram form, can either be integrated into the LCD driver or can be a separate circuit.

1.8.1.4 Concept J

Concept J, like Concept H, need not include any ITO outside the top glass or plastic layer of the display. Physical construction of Concept J is illustrated in FIG. **51**. The touch-sensing surface can be a resistive sheet **5101** like Concept H, but patterned into a number of row strips **5102**. Patterning may be accomplished by photolithography, laser deletion, or other known patterning techniques. By patterning resistive sheet **5101** into a plurality of strips **5102**, the switches along the top and bottom (north and south) can be eliminated, leaving east and west switches **5103** connected to the row strips. Each row **5102** can be stimulated in sequence, using, for example, the V_{MOD} waveform **5201** illustrated in FIG. **52**. The current (charge) required to drive each row **5102** to the modulation voltage can be a function of the capacitance of the row, which can be a combination of the parasitic capacitance (C_PARA **5301**, FIG. **53**) for a given row and the capacitance of the finger or other touch object (C_FINGER **5302**, FIG. **53**).

As shown in FIG. **52**, the signal in the presence of touch **5202** can be mathematically combined with the baseline signal **5203** to compute the coordinates of the touch. The Y outputs can be determined by the centroids of Z outputs for each row. The X outputs can be determined by a weighted average of the X outputs for each row.

FIG. **54** shows how the Concept J touch sensor can be integrated with an LCD. Conductive dots **5401** can connect V_{COM} on the top glass to the TFT layer on the bottom glass. Touch and display operations need not be time division multiplexed. Rather, while a portion of the display is being updated, another portion may be scanned for touch. Various techniques for so doing are discussed above with respect to other embodiments. The touch sensing may use different frequencies and amplitudes, but may be phase synchronized with the LCD row inversion. Switches **5402** can be implemented as TFTs on glass. The measurement circuitry can either be integrated with the LCD controller or a separate component.

1.8.1.5 Concept L

In Concept L, active TFT layers can be added to the color filter glass to allow a segmented ITO layer to provide multiple functions simultaneously across different regions of an LCD display. A stackup diagram for Concept L is illustrated in FIG. **55**. Concept L can contain the same number of ITO layers as a standard LCD display. However, while ITO1 **5509** and other structures **5507**, **5508** on bottom glass **5511** can remain standard, an active TFT layer **5501** on the color filter glass **5505** can allow a region (e.g., a horizontal row) of ITO2 **5504** to be switched between the role of V_{COM}, touch drive, or touch sense.

FIG. **56** illustrates a Concept L display with a horizontally-segmented ITO2 layer **5504**. Different regions of the display are concurrently: undergoing V_{COM} modulation (region **5601**) and/or being written (region **5602**); providing touch stimulus (region **5603**); being measured to provide touch sense (region **5604**); and maintaining a hold state (region **5605**). The transistors in the active TFT layer **5501** can switch the signals for each horizontal row to the desired function for a specified time interval. Each region can have equal exposure to each state, in the same sequence, to substantially eliminate non-uniformity. Because providing touch stimulus may disturb the voltage across the LC, LCD pixel writing can take place just after the touch stimulus phase to reduce the time duration of any disturbance. LCD pixel writing for a region can occur during V_{COM} modulation, while adjacent segments can be undergoing V_{COM} modulation to maintain uniform boundary conditions during pixel writing.

The color filter plate can be formed using a process similar to the process used for the active array. Forming the additional TFT layers may involve additional steps, but the back-end processing of the two substrates can remain substantially similar to that of a standard LCD. These techniques can allow such displays to scale to larger-sized panels without using low-resistivity ITO.

1.8.1.6 Concepts M1 and M2

FIGS. **57** and **58** show stackup diagrams for Concepts M1 and M2, respectively. Concepts M1 and M2 can add layers of patterned ITO and metal to the color filter glass for touch sensing. While concepts M1 and M2 are similar, one difference relates to different uses of the ITO1 and ITO2 layers. Concept M1 can use ITO1 **5701** for touch sense and can use ITO2 **5702** for both V_{COM} (when setting/holding LCD pixel voltages) and touch drive (when not writing pixel voltages). Concept M2 can use ITO1 **5801** for touch drive, and can use ITO2 **5802** for V_{COM} and touch sense. For both Concepts M1 and M2, top glass **5703**, **5803** need not include any transistors or other active components.

In either concept M1 or M2, V_{COM} can be segmented to allow one region of the display to keep a constant V_{COM} during display updating while another region can be independently scanned for touches. This can reduce interference between the touch-sensing and display functions.

FIGS. **59**, **60**A, **60**B, **61**A and **61**B show an exemplary display (corresponding to Concept M2) that has been segmented into three regions (**5901**, **5902**, **5903**; FIG. **59**), and wherein two regions can be simultaneously touch-scanned (e.g., regions **5901**, **5902**) while a third region's display pixels can be updated (e.g., region **5903**). On the left side of FIGS. **61**A and **61**B, twenty seven vertical drive lines **6101** in the ITO1 and M1 (metal 1) layers can provide three different regions with nine touch columns each. Each drive line (3 per touch column) can have a conductive dot (not shown) down to the array glass, and can be routed to a driver ASIC.

The right side of FIGS. **61**A and **61**B show the possible modes for the segmented horizontal rows of the ITO2 layer, which include V_{COM} and V_{HOLD} for a first set of alternating rows **6102** and V_{COM}, V_{HOLD}, and V_{SENSE} for a second set of alternating rows **6103**. Each ITO2 row can connect via a conductive dot (not shown) down to the array glass, from which the mode of the row can be switched using LTPS TFT switches. The right side of FIGS. **61**A and **61**B show twenty-one sense rows, of which fourteen can be sensed at any time (although other numbers of rows could also be more).

FIG. **62** shows the circuit diagram for touch sensing in the exemplary display illustrated in FIGS. **59**, **60**A, **60**B, **61**A and **61**B. V_{STM} driver **6200** sends a signal through metal drive column **6202**, which can have a resistance of R_{metcol} and a

parasitic capacitance of C_{drv}. Touch capacitance C_{sig} can be measured across the ITO row, which can have a resistance of $R_{ito2row}$ and a parasitic capacitance of $C_{ito2row}$. The touch-sensing charge can also be affected by two additional resistances, $R_{sw}1$ and R_{border}, before reaching charge amplifier **6204**.

A display frame update rate of 60 fps can correspond to a touch scan rate of 120 fps. If desired (e.g., in small multi-touch displays) designers may choose to reduce the touch scan rate (e.g., to 60 fps), thereby saving power and possibly reducing complexity. As a result, some regions of the display can be left in a "hold state" when neither display updating nor touch scanning is occurring in that region.

FIG. **63** shows a display in which the display regions can be scanned and updated horizontally instead of vertically (as in FIGS. **60**A and **60**B). The touch drive and touch sense regions can be interleaved so that a stimulus applied to touch drive row **6301** can be simultaneously sensed from two sense rows **6302** and **6303**, as indicated by sense field lines **6305**.

The black mask layer can be used to hide metal wires and/or gaps in ITO layers. For example, the metal drive lines, etched gaps in ITO2, and etched gaps in ITO1 can be fully or partially hidden behind the black mask (as shown in FIG. **64**). This can reduce or eliminate the visual impact these items may have on the display's user.

1.8.1.7 Concept M3

As shown in FIG. **65**, Concept M3 can be similar to Concepts M1 and M2, but with touch drive and touch sense integrated into a single, segmented ITO layer **6501**. While various embodiments described above included drive and sense electrodes on separate layers, Concept M3 can include drive and sense electrodes in the same plane. A dielectric layer **6502** can be added to shield the touch-sensing elements from other electrical fields and/or effects.

FIGS. **66** and **67** illustrate a Concept M3 display segmented into three regions **6601**, **6602**, **6603**, each of which can alternate through a touch stim/sense phase, a LCD pixel writing phase, and a hold phase during every cycle update of the display frame. FIG. **68** illustrates a wiring detail and layout arrangement that enables partitioning the display. ITO1 rows **6801** can connect via conductive dots **6802** to LTPS switches on the TFT glass that switch the voltage for the row between V_{COM} and V_{HOLD}. Three sense lines **6803** can be used for each column (one sense line for each region), with the lines multiplexed so that the signal for the active region can be measured in the corresponding timeframe. During touch scanning for a region, the touch drive elements corresponding to a row in the region can be activated, and all of the columns for that row can be simultaneously sensed. During the time that one region of the display is scanned for touches, another region can be modulating V_{COM} and/or updating the display pixels.

Metal segments (**6805** in FIG. **68**) can be added to regions of the ITO to reduce the resistance of the ITO. For example, short metal segments can be added to the ITO1 drive electrodes **6804** to reduce phase delay of the touch signal. These metal lines may be hidden behind a black mask layer.

As illustrated in FIG. **69**, guard traces **6903** can be used to block field lines between the touch and sense electrodes that do not pass up through the glass where they would be affected by a finger or other touch object. This can reduce noise and enhance the measured effect of touches to the display. FIG. **70** shows a top-view **7001** and a cross-section **7002** of a display without guard traces, in which a narrow gap separates the rows of touch-sensing elements, e.g., drive electrodes **7003** and sense electrodes **7004**. Grounding the ITO2 layer **7005** (V_{COM}) when touch sensing is active can shield touch sensing and display functions from one another. FIG. **69** shows a top-view **11101** and a cross-section **6902** of a display that includes grounded guard traces **6903** between rows of touch-sensing elements on ITO1, e.g., drive electrodes **6904** and sense electrodes **6905**.

1.8.1.8 Concepts P1 and P2

Concepts P1 and P2, like Concept M3, can provide touch drive and touch sense electrodes in the same plane. However, Concepts P1 and P2 can provide an additional benefit of individually-addressable touch-pixels, as shown in FIG. **71**. Each touch pixel can include a drive electrode **7102**, a sense electrode **7103**, and corresponding drive lines **7104** and sense lines **7105** that can be individually routed and connected to a bus on the border of the display. These lines may be formed using conductive black mask, thereby allowing black mask areas already present in the display to provide additional service for touch sensing. Alternatively, the lines may be metal lines disposed behind a black matrix, which can be a polymer black matrix.

FIG. **72** shows a stackup diagram for Concept P1. Concept P1 can differ from a standard LCD process in various respects. For example, a portion of the standard polymer black mask can be changed to black chrome with low-resistance metal backing. These conductive lines can then be used to route signals to and from the touch pixels. A layer of patterned ITO **7202** can be added behind the black mask in an additional mask step. STN-style conductive dots **7203** can be added to route the drive and sense signals for each touch pixel to the LTPS TFT plate (e.g., using 2 dots per touch pixel). The color filter layer and the bordering planarization layer **7204** can also be thickened to decrease the capacitance between the touch drive and V_{COM}

FIG. **73** shows a stackup diagram for Concept P2. In addition to incorporating the four changes described above with respect to Concept P1, Concept P2 can also include a patterned ITO layer **7301** that can be used to create a segmented V_{COM}. Segmenting V_{COM} can isolate touch drive and display operation, thereby potentially improving the signal-to-noise ratio. FIG. **74** shows a circuit diagram highlighting the V_{COM} signal coupling for Concept P2. Keeping independent buses (Vholdbus1 and Vholdbus2) for return current can reduce the coupling charge. Also, using complementary drive for half of the touch pixels can reduce the return current in Vholdbus1.

FIGS. **71** and **75** illustrate an exemplary routing of touch sense and touch drive lines to and from the sense and drive pixels. A set of drive and sense lines can be routed horizontally from bus lines **7501**, **7502** at the sides of the display to each individual touch pixel **7101**. These lines can be hidden behind a black mask layer, or can be incorporated into a conductive black mask layer. This routing can also be on a single layer. Signals for individual touch pixels can be addressed and multiplexed through the bus lines using LTPS TFTs.

The ability to drive individual pixels, rather than whole rows, can be used to reduce parasitic capacitance. Individually-addressable touch pixels can also allow the touch array to be scanned in "random access" mode, rather than just row-by-row. This can increase flexibility in interlacing touch sensing and display updating. For example FIG. **76** illustrates a possible scan pattern. Because the system can scan the touch pixels in any desired pattern, a scan pattern can be designed that ensures that adjacent rows and adjacent pixels are never driven at the same time, thereby avoiding fringe field interaction that can result in signal loss or a lower signal-to-noise ratio. In FIG. **76**, the squares **7601** and **7602** each comprise one drive electrode and one sense electrode. Squares **7601** correspond to in phase drive while squares **7602** correspond

to 180 degree out-of-phase drive signal. In the figure, two rows (totaling twenty pixels) can be covered in five sequences, with four pixels scanned at a time.

1.8.1.9 Concept D

Another embodiment, Concept D, can support multi-touch sensing using two segmented ITO layers and an additional transistor for each touch pixel. FIG. **77** shows a circuit diagram for Concept D. During display updates, the circuit can function as in a standard LCD display. Gate drive **7700** can drive two transistors (Q1 **7702** and Q2 **7704**), thereby allowing signals from V_{COM} bus **7706** and data lines **7708** to transfer charge to a set of capacitors controlling the LC (CST **7710**, C_{LC1} **7712**, and C_{LC2} **7714**). When transistor Q2 **7704** is turned off V_{COM} **7706** is disconnected from CST **7710**, allowing V_{COM} line **7706** to be used for touch sensing. Specifically, V_{COM} line **7706** can be used to send charge through C_{IN} **7716** and C_{OUT} **7718**, through the data line **7708** (which acts as a touch sense line) into charge amplifier **7720**. A conductive object (such as a user's finger, stylus, etc.) approaching the display can perturb the capacitances of the system in a manner that can be measured by the charge amplifier **7720**.

FIGS. **78** and **79** show stackup diagrams for a sub-pixel in a Concept D-based display. In FIG. **78**, the ITO1 layer can be segmented into two plates, A **7722** and C **7726**. The ITO2 layer can be segmented into islands (e.g., B **7724**) that can be located over sub-pixels and serve as the counter-electrodes to the plates in the ITO1 layer. During display update, voltage differences between island **7724** and the plates (A **7722**, C **7726**) can be used to control liquid crystal **7804**. During touch sensing, perturbations to the capacitances throughout the sub-pixel (e.g., $C_{LC}1$, $C_{LC}2$, Cin, Cout, and Cst in FIG. **77**) can be measured to determine the proximity of a conductive object.

FIG. **80** shows a combined wiring and stackup diagram for Concept D. FIG. **81** shows a physical realization for one embodiment of Concept D.

1.8.2 Fully-Integrated IPS-Based LCDs

In-plane switching (IPS), as illustrated schematically in FIG. **82**, can be used to create LCD displays with wider viewing angles. While some LCDs (such as twisted nematic LCDs) use vertically-arranged electrode pairs (e.g., as shown in FIG. **20**), in IPS LCDs both electrodes **8201**, **8202** used to control orientation of the liquid crystals **8203** can be parallel to one another in the same layer (e.g., in a single plane). Orienting the electrodes in this way can generate a horizontal electric field **8200** through the liquid crystal, which can keep the liquid crystals parallel to the front of the panel, thereby increasing the viewing angle. Liquid crystal molecules in an IPS display are not anchored to layers above or below (as shown in FIG. **82**, for example), but instead can rotate freely to align themselves with electric field **8200** while remaining parallel to one another and the plane of the display electrodes. FIG. **83** shows a more realistic arrangement of an interdigitated pair of electrodes **8301**, **8302** in a display that can use in-plane switching.

Because IPS displays lack a V_{COM} layer that can also be used for touch drive or touch sense, some embodiments of the present invention can provide touch-sensing capabilities by allowing the same electrodes used for display updating to also be used for touch sensing. These electrodes can be complemented by additional circuitry. In some embodiments discussed above, touch pixels can overlap a large number of display pixels. In contrast, because the IPS embodiments discussed below can use the same electrodes used for display control and touch sensing, higher touch resolution can be obtained with little to no additional cost. Alternatively, a number of touch pixels can be grouped to produce a combined touch signal with a lower resolution.

1.8.2.1 Concept E

One IPS embodiment, Concept E, is illustrated in FIG. **84**. As mentioned above, the electrodes in IPS-based touch sensing displays can be in the same plane and can have an interdigitated structure (as shown in FIG. **84**). While electrode A **8400** and electrode B **8402** can be used to orient the liquid crystal layer during display updating, these same electrodes can also be used (in combination with additional elements) to achieve touch sensing. For example, Concept E can use additional switches **8404** to change the drives for a set of signal lines based on whether the pixel is undergoing display updating or touch-sensing. Concept E can also include capacitances (CIN_A **8406**, COUT_A **8408**, CIN_B **8410**, and COUT_B **8412**) and two transistors (transistor Q1 **8414** and transistor Q2 **8416**) to control when the electrodes will be used for display updating or touch sensing.

During touch sensing, transistors Q1 **8414** and Q2 **8418** are turned off, disconnecting the electrodes from display signals and allowing the electrodes to be used to measure capacitance. The V_{COM} metal line **8416** can then be connected to touch stimulation signal **8418**. This stimulation signal can be sent through CIN_A **8406** and CIN_B **8410** to COUT_A **8408** and COUT_B **8412**, which can connect to charge amplifier **8422**. A capacitance C_{SIG} (not shown) between CIN and COUT can be used to detect touch. When the sense pixel is not being touched, charge delivered to the charge amplifier **8422** can depend mainly on the capacitance between the two pairs of CIN and COUT capacitors. When an object (such as a finger) approaches the electrodes, the C_{SIG} capacitance can be perturbed (e.g., lowered) and can be measured by charge amplifier **8422** as a change in the amount of charge transferred. The values for CIN and COUT can be selected to fit a desired input range for charge amplifier **8422** to optimize touch signal strength.

The electrodes can be used to perform touch sensing without negatively affecting the display state by using a high-frequency signal during touch sensing. Because LC molecules are large and non-polar, touches can be detected without changing the display state by using a high-frequency field that does not change or impose a DC component on the RMS voltage across the LC.

FIG. **85** shows a stackup diagram for Concept E. As described, all touch elements can be formed on TFT plate **8501**.

1.8.2.2 Concept Q

Another embodiment of an IPS-based touch-sensing display, Concept Q, also permits the TFT glass elements of an LCD (such as metal routing lines, electrodes, etc.) to be used for both display and touch sensing functions. A potential advantage of such an embodiment is that no changes to display factory equipment are required. The only addition to conventional LCD fabrication includes adding the touch-sensing electronics.

Concept Q includes two types of pixels, illustrated in FIGS. **105** and **106**. Pixel type A is illustrated in FIG. **105**. Each pixel **10501** includes three terminals, a select terminal **10502**, a data terminal **10503**, and a common terminal **10504**. Each of the A type pixels have their common terminal connected along columns **10505** to form touch-sensing columns. Pixel type B is illustrated in FIG. **106**. Each pixel **10601** also includes three terminals, select **10602**, data **10603**, and common **10604**. Each of the B type pixels have their common terminal connected along rows **10605** to form touch sensing rows. The pixels can be arranged as shown in FIG. **107** with a plurality of touch sense rows **10702** and a plurality of touch sense columns **10703**. A touch sensing chip **10701**, which can

include the drive stimulation and sensing circuitry can be connected to the rows and columns.

The touch sensing chip can operate as follows. During a first time period, all of the rows and columns can be held at ground while the LCD is updated. In some embodiments, this may be a period of about 12 ms. During a next time period the A type pixels, i.e., touch columns, can be driven with a stimulus waveform while the capacitance at each of the B type pixels, i.e., touch rows, can be sensed. During a next time period, the B type pixels, i.e., touch rows, can be driven with a stimulus waveform while the capacitance at each of the A type pixels, i.e., touch columns, can be sensed. This process can then repeat. The two touch-sense periods can be about 2 ms. The stimulus waveform can take a variety of forms. In some embodiments it may be a sine wave of about 5V peak-to-peak with zero DC offset. Other time periods and waveforms may also be used.

1.8.2.3 Concept G

One issue that can arise in an IPS-based touch-sensing display is that a lack of shielding between the touch and the LC means a finger (or other touch object) can affect the display output. For instance, a finger touching the screen can affect the fields used to control the LC, causing the display to distort. One solution to this issue can be to put a shield (e.g., a transparent ITO layer) between the user and the display sub-pixels. However, such a shield can also block the electric fields used for touch sensing, thereby hindering touch sensing.

One embodiment, Concept G, overcomes this issue by flipping the layers of the display as shown in the stackup diagram in FIG. **86**. This can place LC **8600** on the opposite side of the TFT plate **8602** from the user. As a result, the field lines used to control the LC **8600** can be generally oriented away from the touch side of the LCD. This can allow metal areas, such as the data lines, gate lines, and electrodes, that are now between the touching object and the LC **8600** to provide partial or full shielding for the LC.

1.8.2.4 Concept F

Another embodiment, Concept F (illustrated in FIG. **87**), can reduce display perturbation while leaving the LCD data bus unchanged (in relation to non-touch IPS displays) and without requiring additional ITO layers or making the alignment of layers more difficult. Instead of using a shared data line (as in Concepts E and G), Concept F can reduce potential display perturbation by adding a set of routed metal lines in a metal layer (M1) that can serve as output sense lines **8700**. These output sense lines **8700** can run vertically underneath the display circuitry across the full area of the display, as shown in FIG. **87** and in the stackup diagram for a Concept F sub-pixel shown in FIG. **88**. By using a separate metal layer for output sense, Concept F can allow one of the transistors shown for Concept E (FIG. **84**) to be removed. Note also that Concept F flips the layers of the display to further reduce potential display perturbation, as described above with respect to Concept G.

2. Enabling Technologies

A variety of aspects can apply to many of the embodiments described above. Examples of these are described below.

2.1 DITO

In many embodiments, ITO may be deposited and patterned on two sides of a substrate. Various techniques and processes for doing so are described in U.S. patent application Ser. No. 11/650,049, titled "Double-Sided Touch Sensitive Panel With ITO Metal Electrodes," filed Jan. 3, 2007, which is hereby incorporated by reference in its entirety.

2.2 Replacing Patterned ITO with Metal

Various embodiments can eliminate the patterned ITO layer that forms touch sense electrodes and replace this layer with very thin metal lines deposited on one of the layers, for example, on the top glass. This can have a number of advantages, including eliminating an ITO processing step. Additionally, the sense line electrodes may be made quite thin (e.g., on the order of 10 microns), so that they do not interfere with visual perception of the display. This reduction in line thickness can also reduce the parasitic capacitance which can enhance various aspects of touch screen operation, as described above. Finally, because the light from the display does not pass through a layer substantially covered with ITO, color and transmissivity can be improved.

2.3 Use of Plastic for Touch Sense Substrate

Various embodiments described above have been described in the context of glass substrates. However, in some embodiments, cost savings and reduced thickness can be achieved by replacing one or more of these substrates with plastic. FIGS. **89** and **90** illustrate some differences between glass-based systems, illustrated in FIG. **89**, and plastic-based systems, illustrated in FIG. **90**. Although illustrated in the context of one particular embodiment, the principle of substituting a plastic substrate may be applied to any of the concepts.

FIG. **89** illustrates a stack up of a glass based system. Dimensions illustrated are exemplary using current technology, but those skilled in the art will understand that other thickness may be used, particularly as the various fabrication technologies advance. Starting from the top, a cover **8901**, having an exemplary thickness of about 0.8 mm, can be above an index matching layer **8902** (e.g., approximately 0.18 mm thick). Below the index matching layer can be top polarizer **8903**. The top polarizer **8903** can have a thickness of approximately 0.2 mm. The next layer can be glass layer **8904** (e.g., about 0.5 mm thick) having ITO patterned on each side. Sense electrodes can be patterned on the top side, for example, which can also be bonded to FPC **8905**. The drive electrodes and V_{COM} layer for the LCD can be patterned on the bottom of glass layer **8905**. Below this can be another glass layer **8906**, having an exemplary thickness of about 0.3 mm, on which the TFT layers for the display can be formed. The top of this glass layer can also be bonded to FPC **8907** connecting to both the display and touch sensing circuitry **8908**. Below this can be the bottom polarizer, below which can be the display backlight **8910**.

The overall thickness from top to bottom can be approximately 2.0 mm. Various ASICs and discrete circuit components may be located on the glass or connected via the FPCs. Patterned ITO can be placed on another plastic layer, for example, the bottom side of the top cover, etc.

FIG. **90** illustrates a similar arrangement in which middle glass layer **9001** can be reduced in thickness by moving touch sense layer **9002** to plastic polarizer **9003**. Patterning touch sense layer **9002** on plastic polarizer **9003** can be accomplished by various known methods. Reduction in thickness can be accomplished because the glass need not be patterned on both sides. Because of handling issues, glass used in LCD processes may be processed at a thickness of about 0.5 mm, for example, and then ground down to about, 0.3 mm, for example, after processing. Having circuit elements on both sides precludes grinding down the glass. However, because in the embodiment of FIG. **90** middle glass **9001** has electrodes patterned on only one side, it may be ground down, giving an overall thickness reduction of about 0.2 mm. This arrangement may include additional FPC connection **9004** to the polarizer, which can be bonded using a low temperature

bonding process. An additional advantage of using a plastic substrate can arise in that materials with different dielectric constants can be used, which can provide flexibility and enhance operation of capacitive sensing circuits.

A variation on the plastic substrate embodiment is illustrated in FIG. **91**. Electrodes **9101** (e.g., drive or sense lines) can be patterned on multiple plastic substrates **9102**, **9103** that can then be adhered together. Because the plastic substrates can be thinner (e.g., approximately half the thickness of a glass substrate) such techniques can allow even thinner touch screens.

In another variation, illustrated in FIG. **92**, polyester substrate **9201** can have electrodes **9202** patterned on either side. This embodiment can include an access hole **9203** through substrate **9201** for connection between the two sides. Polyester substrate **9201** can be disposed in cover **9204** of a device, such as a handheld computer. Still another variation is illustrated in FIG. **93**, which illustrates a polyester layer **9301** having ITO electrodes **9302** patterned on a top surface, with access hole **9303** through substrate **9301** to a second glass substrate **9304**, also with ITO electrode **9305** patterned on the top surface.

FIG. **94** illustrates an upside down view of a device, for example a handheld computer **9401**. By upside down, it is meant that the user surface of the device is the bottom surface (not shown). ITO touch sensing electrodes **9402** can be patterned on the back of the user surface, with a stack up **9403** having ITO disposed on the facing surface being disposed therein during device assembly. A further variation of this concept is illustrated in FIG. **95**, which shows ITO electrodes **9501** patterned on the inside of molded plastic cover **6702** and on the top of a stack up of layers **9503** according to one of the various embodiments discussed herein. In the diagram of FIG. **95**, the user face of the device can be top surface **9504**.

FIGS. **96**, **97**, and **98** illustrate a sequence of steps in manufacturing a polyester substrate having a pattern of ITO electrodes disposed thereon that may be suitable for touch sensing as described herein. FIG. **96** illustrates a patterned polyester sheet **9601** patterned into a grid of isolated squares of ITO **9602**. The ITO resistivity can be about 200 ohms or less. The individual electrodes can be approximately 1 mm by 1 mm, with 30 micron gaps between. In the illustrated embodiment, sheet **9601** can be approximately 50 mm by 80 mm, which can be a suitable size for a handheld computer, multimedia player, mobile telephone, or similar device, although a variety of other sizes and/or applications will occur to those skilled in the art. As illustrated in the sectional view, the sheet may be as little as 25 microns thick, although dimensions of 25 to 200 microns may also be used. Obviously, this can provide significant advantages in terms of device thickness.

In FIG. **97**, FPCs **9701** can be bonded to the patterned substrate **9702**. In FIG. **98** cover **9801**, which can be, for example, an approximately 0.8 mm thick layer of PMMA, can be adhered to the PET substrate **9802** using an optically clear adhesive.

2.4 Level Shifter/Decoder Integration with LCD Controller

In some embodiments, additional circuitry (active, passive, or both) can be placed in the peripheral area of the LCD (see FIG. **6**) to support delivery of V_{STM} signals to the touch drive segments. Details of the peripheral area circuitry and its design rules can depend on the particular manufacturing process details and on which TFT technology (i.e., PMOS, NMOS or CMOS) is used. The following four sub-sections discuss approaches for realizing peripheral touch drive circuits in view of different drive circuit integration arrangements.

2.4.1 Discrete Level Shifter/Decoder Chip

In one approach, a discrete level shifter/decoder COG can be attached to the bottom glass (see FIG. **22**). In this arrangement metal traces may be needed in the peripheral area. The number of traces can depend on the number of touch drive segments, which may be less than 20 for small displays. Design objectives of this approach can include reducing capacitive coupling, which can be affected by the spacing between touch drive traces, and the space between the touch drive traces and other LCD circuits in the peripheral area. Low trace impedance can also help reduce capacitive coupling between adjacent touch drive traces.

For example, the combined resistance of the longest trace, the level shifter/decoder output resistance, the conductive dot, and the ITO drive segment may be limited to about 450 ohms. The resistance of the touch drive ITO may be around 330 ohms (assuming ITO sheet resistance of 30 ohms/sq and 11 squares), which can leave 120 ohms for other components. The following table shows one allocation of this resistance for each component in the touch drive circuit.

Level shifter/ decoder Output	Metal Trace	Conductive Dot	ITO Segment
10 ohms	100 ohms	10 ohms	330 ohms

Wider traces and/or lower sheet resistances may be used to obtain the desired trace resistance. For example, for a trace resistance of 100 ohms, a trace width of 0.18 mm or more may be desirable if the sheet resistance is 200 mohms/sq.

Of course, only the longest touch drive traces need the greatest width. Other touch drive traces, being correspondingly shorter, may have correspondingly smaller widths. For example, if the shortest trace is 5 mm, then its width could be around 0.01 mm.

FIG. **99** shows a simplified diagram of the level shifter/decoder COG **9901** for Concept A. (For Concept B, transistor Q1 and ENB_LCD[x] decoder can be eliminated.) Registered decoder block **9902** can be comprised of three separate registered decoders, which can be loaded one at a time. One of the three decoders can be selected by two signals from the Touch/LCD Driver and can be programmed using 5-bit data. The decoder outputs can control the three transistors Q1, Q2, Q3 associated with each output section of the level shifter/decoder. Each output section can be in one of three states: 1) LCD (Q1 on, Q2 and Q3 off), 2) touch (Q2 on, Q1 and Q3 off), or 3) GND (Q3 on, Q1 and Q2 off). As mentioned above, Q2's output resistance can be approximately 10 ohms or less to reduce V_{STM} phase delay. For Concept B, the LCD decoder and Q1 can be eliminated.

2.4.2 Level Shifter/Decoder Fully-Integrated in Peripheral Area

The level shifter/decoder function (FIG. **99**) can also be fully integrated in the peripheral area of the bottom glass. With this approach, the type of TFT technology becomes relevant to power consumption. While CMOS TFT technology may give lower power consumption, it may be more expensive than NMOS or PMOS. However, any technology may be used depending on particular design constants.

To further reduce touch drive resistance, the transistor width may be enlarged to compensate for relatively low LTPS TFT mobility (e.g., ~50 $cm^2/V*sec$).

2.4.3 Level Shifter/Decoder Partially Integrated in Touch/LCD Driver

In some embodiments, the level shifter/decoder function can be partially integrated in the Touch/LCD Driver and partially integrated in the peripheral area. This approach can have several benefits including, for example, eliminating CMOS in the peripheral area, which can reduce cost, and eliminating logic in the peripheral area, which can reduce power consumption. FIG. **100** shows a modified Touch/LCD Driver **10001** and peripheral transistor circuit **10002** that can be used in this approach. The level shifter and boost circuit **10003** can be integrated on the bottom glass and positioned between the segment drivers and the Touch/LCD chip. There can be one segment driver for each touch drive segment. Each touch drive segment can be in one of three states: GND, modulated by V_{STM}, or modulated by V_{COM}. In this arrangement level shifter circuits may be needed on the bottom glass to enable the low voltage Touch/LCD chip to control the transistor switches.

2.4.4 Level Shifter/Decoder Fully Integrated in Touch/LCD Driver

In some embodiments, the level shifter/decoder function can be completely integrated in the Touch/LCD Driver. By moving the Level shifter/decoder function to the Touch/LCD Driver, the separate level shifter/decoder COG can be eliminated. Furthermore, eliminating CMOS and logic from the peripheral area can be achieved.

FIG. **101** shows a simplified block diagram of the fully integrated Touch/LCD driver **10101**, which can include the boost circuitry **10102** to generate Vs™. Passive components (such as capacitors, diodes, and inductors) may also needed, but, as with all the other approaches, have not been shown for simplicity.

3. Uses, Form Factors, Etc.

Exemplary applications of the integral touch screen LCD described herein will now be described. Handheld computers can be one advantageous application, including devices such as PDAs, multimedia players, mobile telephones, GPS devices, etc. Additionally, the touch screen may find application in tablet computers, notebook computers, desktop computers, information kiosks, and the like.

FIG. **102** is a perspective view of an application of a touch screen **10201**, in accordance with one embodiment of the present invention. Touch screen **10201** can be configured to display a graphical user interface (GUI) including perhaps a pointer or cursor as well as other information to the user. By way of example, the touch screen may allow a user to move an input pointer or make selections on the graphical user interface by simply pointing at the GUI on the display **10202**.

In general, touch screens can recognize a touch event on the surface **10204** of the touch screen and thereafter output this information to a host device. The host device may, for example, correspond to a computer such as a desktop, laptop, handheld or tablet computer. The host device can interpret the touch event and can perform an action based on the touch event. The touch screen shown in FIG. **102** can be configured to recognize multiple touch events that occur at different locations on the touch sensitive surface **10204** of the touch screen at the same time. As shown, the touch screen can, for example, generate separate tracking signals S1-S4 for each touch point T1-T4 that occurs on the surface of the touch screen at a given time.

The multiple touch events can be used separately or together to perform singular or multiple actions in the host device. When used separately, a first touch event may be used to perform a first action while a second touch event may be used to perform a second action that can be different than the first action. The actions may, for example, include moving an object such as a cursor or pointer, scrolling or panning, adjusting control settings, opening a file or document, viewing a menu, making a selection, executing instructions, operating a peripheral device connected to the host device etc. When used together, first and second touch events may be used for performing one particular action. The particular action may for example include logging onto a computer or a computer network, permitting authorized individuals access to restricted areas of the computer or computer network, loading a user profile associated with a user's preferred arrangement of the computer desktop, permitting access to web content, launching a particular program, encrypting or decoding a message, and/or the like.

Referring back to FIG. **102**, touch screen **10201** may be a stand alone unit or may integrate with other devices. When stand alone, touch screen **10201** can act like a peripheral device (e.g., a monitor) that can include its own housing. A stand alone display arrangement can be coupled to a host device through wired or wireless connections. When integrated, touch screen **10201** can share a housing and can be hard wired into the host device, thereby forming a single unit. By way of example, the touch screen **10201** may be disposed inside a variety of host devices including but not limited to general purpose computers such as a desktop, laptop or tablet computers, handhelds such as PDAs and media players such as music players, or peripheral devices such as cameras, printers, mobile telephones, and/or the like.

FIG. **103** is a block diagram of a computer system **10301**, in accordance with one embodiment of the present invention. Computer system **10301** may correspond to personal computer systems such as desktops, laptops, tablets or handhelds. By way of example, the computer system may correspond to any Apple or PC-based computer system. The computer system may also correspond to public computer systems such as information kiosks, automated teller machines (ATM), point of sale machines (POS), industrial machines, gaming machines, arcade machines, vending machines, airline e-ticket terminals, restaurant reservation terminals, customer service stations, library terminals, learning devices, and the like.

As shown, computer system **10301** can include processor **56** configured to execute instructions and to carry out operations associated **10302** computer system **10301**. For example, using instructions retrieved for example from memory, processor **10302** may control the reception and manipulation of input and output data between components of computing system **10301**. Processor **10302** can be a single-chip processor or can be implemented with multiple components.

In most cases, processor **10302** together with an operating system operates to execute computer code and produce and use data. The computer code and data may reside within program storage block **10303** that can be operatively coupled to processor **10302**. Program storage block **10303** can provide a place to hold data being used by computer system **10301**. By way of example, the program storage block may include read-only memory (ROM) **10304**, random-access memory (RAM) **10305**, hard disk drive **10306**, and/or the like. The computer code and data could also reside on a removable storage medium and loaded or installed onto the computer system when needed. Removable storage media can include, for example, CD-ROM, PC-CARD, floppy disk, magnetic tape, and a network component.

Computer system **10301** can also include an input/output (I/O) controller **10307** that can be operatively coupled to processor **10302**. I/O controller **10307** may be integrated with processor **56** or it may be a separate component as shown. I/O

controller **10307** can be configured to control interactions with one or more I/O devices. I/O controller **66** can operate by exchanging data between the processor and the I/O devices that desire to communicate with the processor. The I/O devices and the I/O controller can communicate through data link **10312**. Data link **10312** may be a one way link or two way link. In some cases, I/O devices may be connected to I/O controller **10307** through wired connections. In other cases, I/O devices may be connected to I/O controller **10307** through wireless connections. By way of example, data link **10312** may correspond to PS/2, USB, Firewire, IR, RF, Bluetooth, or the like.

Computer system **10301** can also include display device **10308**, e.g., an integral touch screen LCD as described herein, that can be operatively coupled to processor **10302**. Display device **10308** may be a separate component (peripheral device) or may be integrated with the processor and program storage to form a desktop computer (all in one machine), a laptop, handheld or tablet or the like. Display device **10308** can be configured to display a graphical user interface (GUI) including, for example, a pointer or cursor as well as other information displayed to the user.

Display device **10308** can also include an integral touch screen **10309** (shown separately for clarity, but actually integral with the display) that can be operatively coupled to the processor **10302**. Touch screen **10309** can be configured to receive input from a user's touch and to send this information to processor **10302**. Touch screen **10309** can recognize touches and the position, shape, size, etc., of touches on its surface. Touch screen **10309** can report the touches to processor **10302**, and processor **10302** can interpret the touches in accordance with its programming. For example, processor **10302** may initiate a task in accordance with a particular touch.

The touch screen LCDs described herein may find particularly advantageous application in multi-functional handheld devices such as those disclosed in U.S. patent application Ser. No. 11/367,749, entitled "Multi-functional Hand-held Device", filed Mar. 3, 2006, which is hereby incorporated by reference.

For example, principles described herein may be used to devise input devices for a variety of electronic devices and computer systems. These electronic devices and computer system may be any of a variety of types illustrated in FIG. **104**, including desktop computers **10401**, notebook computers **10402**, tablet computers **10403**, handheld computers **10404**, personal digital assistants **10405**, media players **10406**, mobile telephones **10407**, and the like. Additionally, the electronic devices and computer systems may be combinations of these types, for example, a device that is a combination of personal digital assistant, media player and mobile telephone. Other alternations, permutations, and combinations of the aforementioned embodiments are also possible.

Moreover, the principles herein, though described with reference to capacitive multi-touch systems, may also apply to systems in which touch or proximity sensing depends on other technologies. It is therefore intended that the following claims be interpreted as including all alterations, permutations, combinations and equivalents of the foregoing.

What is claimed is:

1. An electronic device incorporating an in-plane-switching (IPS) liquid crystal display touch screen, the touch screen comprising:

a first substrate having pairs of electrodes for display pixels of the liquid crystal display;

the pairs of electrodes disposed in an in-plane-switching arrangement;

a second substrate, the second substrate having a color filter plate;

a liquid crystal layer disposed between the first and second substrates; and

a plurality of sense lines disposed underneath and between the first substrate and the pairs of electrodes;

in a display mode of operation, the pairs of electrodes operative as pixel electrodes and common electrodes, the pixel electrodes connected to receive display data and the common electrodes connected to receive a Vcom modulation voltage; and

in a touch sensing mode of operation, the common electrodes connected to receive a stimulation signal and the plurality of sense lines connected to capacitive sensing circuitry.

2. The electronic device of claim **1**, wherein the electronic device is selected from the group consisting of a desktop computer, a tablet computer, and a notebook computer.

3. The electronic device of claim **1**, wherein the electronic device comprises at least one of a handheld computer, a personal digital assistant, a media player, and a mobile telephone.

4. The electronic device of claim **1**, further comprising:

a first and second polarizer;

the first substrate disposed between the first and second polarizers;

the second substrate disposed between the first and second polarizers.

5. The electronic device of claim **4**, further comprising:

gate lines for gating the pairs of electrodes; and

data lines for supplying the display data to the pixel electrodes.

6. The electronic device of claim **5**, where in the sense lines are separate from the gate and data lines.

7. The electronic device of claim **6**, further comprising an insulating layer disposed between the sense lines and the pairs of electrodes.

8. The touch screen as recited in claim **6**, wherein the second substrate is positioned nearer a user than the first substrate.

9. The touch screen as recited in claim **6**, wherein the first substrate is positioned nearer a user than the second substrate.

10. The electronic device of claim **1**, further comprising an insulating layer disposed between the sense lines and the pairs of electrodes.

11. The touch screen as recited in claim **1**, wherein the second substrate is positioned nearer a user than the first substrate.

12. The touch screen as recited in claim **1**, wherein the first substrate is positioned nearer a user than the second substrate.

13. A mobile telephone incorporating an in-plane-switching (IPS) liquid crystal display touch screen, the touch screen comprising:

a first substrate, the first substrate having pairs of electrodes for display pixels of the liquid crystal display;

the pairs of electrodes disposed in an in-plane-switching arrangement;

a second substrate having a color filter plate;

a liquid crystal layer disposed between the first and second substrates; and

a plurality of sense lines disposed underneath and between the first substrate and the pairs of electrodes;

in a display mode of operation, the pairs of electrodes operative as pixel electrodes and common electrodes, the pixel electrodes connected to receive display data and the common electrodes connected to receive a common voltage modulation voltage; and

in a touch sensing mode of operation, the common electrodes connected to receive a stimulation signal and the plurality of sense lines connected to capacitive sensing circuitry.

14. The mobile telephone of claim **13**, further comprising:

a first and second polarizer;

the first substrate disposed between the first and second polarizers;

the second substrate disposed between the first and second polarizers.

15. The mobile telephone of claim **14**, further comprising:

gate lines for gating the pairs of electrodes; and

data lines for supplying the display data to the pixel electrodes.

16. The mobile telephone of claim **15**, where in the sense lines are separate from the gate and data lines.

17. The mobile telephone of claim **16**, further comprising an insulating layer disposed between the sense lines and the pairs of electrodes.

18. The mobile telephone as recited in claim **16**, wherein the second substrate is positioned nearer a user than the first substrate.

19. The mobile telephone as recited in claim **16**, wherein the first substrate is positioned nearer a user than the second substrate.

20. The mobile telephone of claim **13**, further comprising an insulating layer disposed between the sense lines and the pairs of electrodes.

21. The mobile telephone as recited in claim **13**, wherein the second substrate is positioned nearer a user than the first substrate.

22. The mobile telephone as recited in claim **13**, wherein the first substrate is positioned nearer a user than the second substrate.

23. A touch screen comprising an in-plane-switching (IPS) liquid crystal display with integral touch sensing, the touch screen comprising:

a first substrate having pairs of electrodes for display pixels of the liquid crystal display;

the pairs of electrodes disposed in an in-plane-switching arrangement;

a second substrate having a color filter plate;

a liquid crystal layer disposed between the first and second substrates; and

a plurality of sense lines disposed underneath and between the first substrate and the pairs of electrodes;

in a display mode of operation, the pairs of electrodes operative as pixel electrodes and common electrodes, the pixel electrodes connected to receive display data and the common electrodes connected to receive a common voltage modulation voltage; and

in a touch sensing mode of operation, the common electrodes connected to receive a stimulation signal and the plurality of sense lines connected to capacitive sensing circuitry.

24. The touch screen of claim **23**, wherein the touch screen is incorporated into one of a desktop computer, a tablet computer, and a notebook computer.

25. The touch screen of claim **23**, wherein the touch screen is incorporated into one of a handheld computer, a personal digital assistant and a media player.

26. The touch screen of claim **23**, further comprising:

a first and second polarizer;

the first substrate disposed between the first and second polarizers;

the second substrate disposed between the first and second polarizers.

27. The touch screen of claim **26**, further comprising:

gate lines for gating the pairs of electrodes; and

data lines for supplying the display data to the pixel electrodes.

28. The touch screen of claim **27**, where in the sense lines are separate from the gate and data lines.

29. The touch screen of claim **28**, further comprising an insulating layer disposed between the sense lines and the pairs of electrodes.

30. The touch screen as recited in claim **28**, wherein the second substrate is positioned nearer a user than the first substrate.

31. The touch screen as recited in claim **28**, wherein the first substrate is positioned nearer a user than the second substrate.

32. The touch screen of claim **23**, further comprising an insulating layer disposed between the sense lines and the pairs of electrodes.

33. The touch screen as recited in claim **23**, wherein the second substrate is positioned nearer a user than the first substrate.

34. The touch screen as recited in claim **23**, wherein the first substrate is positioned nearer a user than the second substrate.

* * * * *