US009286024B2

(12) **United States Patent**
Becze et al.

(10) **Patent No.: US 9,286,024 B2**
(45) **Date of Patent: Mar. 15, 2016**

(54) **METAL HOUSING WITH MOULDED PLASTIC**

(71) Applicant: **Z124**, Georgetown (KY)

(72) Inventors: **Charles Becze**, Oakville (CA); **Richard Teltz**, Hamilton (CA)

(73) Assignee: **Z124**, George Town (KY)

(*) Notice: Subject to any disclaimer, the term of this patent is extended or adjusted under 35 U.S.C. 154(b) by 653 days.

(21) Appl. No.: **13/629,256**

(22) Filed: **Sep. 27, 2012**

(65) **Prior Publication Data**

US 2013/0083470 A1 Apr. 4, 2013

Related U.S. Application Data

(60) Provisional application No. 61/539,884, filed on Sep. 27, 2011.

(51) **Int. Cl.**
H05K 5/00 (2006.01)
H05K 7/00 (2006.01)
(Continued)

(52) **U.S. Cl.**
CPC ***G06F 3/1423*** (2013.01); ***B29D 11/00673*** (2013.01); ***E05D 3/12*** (2013.01); ***G02B 6/0001*** (2013.01); ***G06F 1/1601*** (2013.01); ***G06F 1/1616*** (2013.01); ***G06F 1/1637*** (2013.01); ***G06F 1/1641*** (2013.01); ***G06F 1/1649*** (2013.01); ***G06F 1/1692*** (2013.01); ***G06F 3/00*** (2013.01); ***G06F 3/01*** (2013.01); ***G06F 3/041*** (2013.01); ***G06F 3/048*** (2013.01); ***G06F 3/0412*** (2013.01); ***G06F 3/0481*** (2013.01); ***G06F 3/0483*** (2013.01); ***G06F 3/04883*** (2013.01); ***G06F 3/04897*** (2013.01); ***G06F 3/1438*** (2013.01); ***G06F 3/1446*** (2013.01); ***G06F 9/44*** (2013.01); ***G06F 9/4443*** (2013.01); ***G06T 3/00*** (2013.01); ***G09G 1/00*** (2013.01); ***G09G 5/00*** (2013.01); ***G09G 5/14*** (2013.01); ***G09G 5/34*** (2013.01); ***H04M 1/0266*** (2013.01); ***H04N 5/44591*** (2013.01); ***H04W 48/18*** (2013.01); ***H04W 72/06*** (2013.01); ***H04W 88/06*** (2013.01); ***H05K 5/0017*** (2013.01); ***H05K 5/0226*** (2013.01); ***H05K 5/04*** (2013.01); ***H05K 7/02*** (2013.01); ***H05K 7/1452*** (2013.01); ***H05K 13/00*** (2013.01); ***H05K 13/046*** (2013.01); *E05Y 2900/606* (2013.01); *G06F 1/16* (2013.01);
(Continued)

(58) **Field of Classification Search**
CPC G02F 1/1333; G01D 11/245
USPC 361/679.01
See application file for complete search history.

(56) **References Cited**

U.S. PATENT DOCUMENTS

4,427,006 A 1/1984 Nottke
4,825,395 A 4/1989 Kinser, Jr. et al.
(Continued)

OTHER PUBLICATIONS

Official Action for U.S. Appl. No. 13/627,793, mailed May 15, 2014 10 pages.
(Continued)

Primary Examiner — Jerry Wu
(74) *Attorney, Agent, or Firm* — Sheridan Ross P.C.

(57) **ABSTRACT**

A housing for a handheld computing device can include a metallic outer shell having a substantially flat base and a sidewall connected to a periphery of the base, the metallic outer shell having an inner surface and an outer surface and a polymeric portion nanomolded on the inner surface of the metallic outer shell in a predetermined location to provide rigidity to the metallic outer shell.

24 Claims, 44 Drawing Sheets

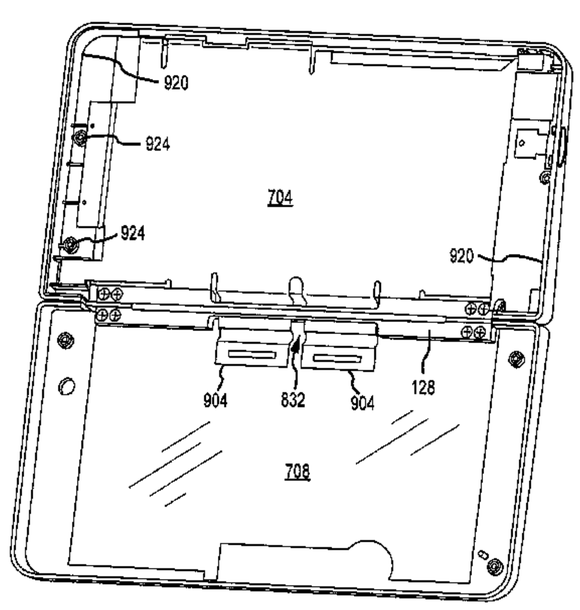

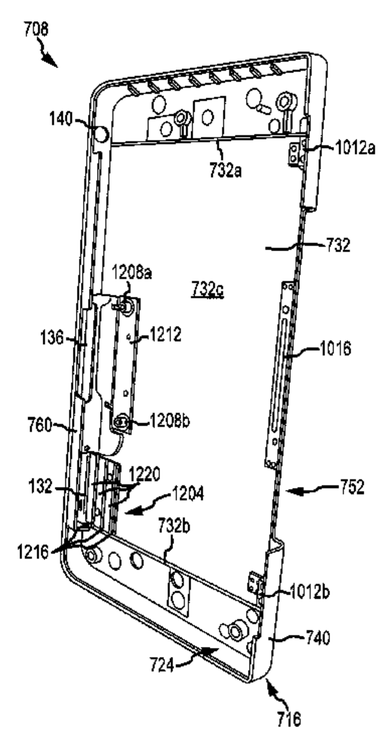

(51) **Int. Cl.**

G06F 3/14	(2006.01)
G06F 1/16	(2006.01)
G06F 9/44	(2006.01)
G06F 3/0481	(2013.01)
G06F 3/0483	(2013.01)
G09G 5/14	(2006.01)
B29D 11/00	(2006.01)
E05D 3/12	(2006.01)
F21V 8/00	(2006.01)
G06F 3/01	(2006.01)
G06F 3/041	(2006.01)
G06F 3/048	(2013.01)
G06F 3/0489	(2013.01)
G06T 3/00	(2006.01)
G09G 1/00	(2006.01)
G09G 5/00	(2006.01)
G09G 5/34	(2006.01)
H04M 1/02	(2006.01)
H04N 5/445	(2011.01)
H04W 48/18	(2009.01)
H04W 72/06	(2009.01)
H04W 88/06	(2009.01)
H05K 5/02	(2006.01)
H05K 5/04	(2006.01)
H05K 7/02	(2006.01)
H05K 7/14	(2006.01)
H05K 13/00	(2006.01)
H05K 13/04	(2006.01)
G06F 3/00	(2006.01)
G06F 3/0488	(2013.01)

(52) **U.S. Cl.**

CPC *G06F 3/0488* (2013.01); *Y10T 16/547* (2015.01); *Y10T 29/4984* (2015.01); *Y10T 29/49826* (2015.01)

(56) **References Cited**

U.S. PATENT DOCUMENTS

4,961,126	A	10/1990	Suzuki
5,363,089	A	11/1994	Goldenberg
5,581,440	A	12/1996	Toedter
5,959,833	A	9/1999	Youens
6,195,264	B1	2/2001	Lauffer et al.
6,223,393	B1	5/2001	Knopf
6,239,976	B1	5/2001	Templeton et al.
6,404,626	B1	6/2002	Low et al.
6,504,710	B2	1/2003	Sutton et al.
6,652,170	B1	11/2003	Arnold
6,653,919	B2	11/2003	Shih-Chung et al.
6,900,981	B2	5/2005	Kuivas et al.
7,115,780	B2	10/2006	Barzaghi et al.
7,140,074	B2	11/2006	Han et al.
7,155,780	B2	1/2007	Chen
7,274,954	B2	9/2007	Oldham
7,330,548	B2	2/2008	Kim et al.
7,355,137	B2	4/2008	Kawasaki et al.
D593,091	S	5/2009	Behar et al.
7,554,050	B1	6/2009	Lv
7,645,063	B2	1/2010	Lee et al.
7,656,675	B2	2/2010	Kim et al.
7,697,281	B2	4/2010	Dabov et al.
7,832,056	B2	11/2010	Kuwajima et al.
7,869,834	B2	1/2011	Seol et al.
7,876,288	B1	1/2011	Huang
7,889,139	B2	2/2011	Hobson et al.
7,911,387	B2	3/2011	Hill et al.
7,920,904	B2	4/2011	Kim et al.
7,957,632	B2	6/2011	Yoshida et al.
8,058,553	B2	11/2011	Saito et al.
8,089,772	B2	1/2012	Chen
8,194,001	B2	6/2012	Miller et al.
8,232,493	B2	7/2012	Ichikawa et al.
8,279,592	B2	10/2012	Imamura et al.
8,284,568	B2	10/2012	Xiao
8,373,975	B2	2/2013	Liang et al.
8,395,555	B2	3/2013	Hobson et al.
8,441,791	B2	5/2013	Bohn et al.
8,451,601	B2	5/2013	Bohn et al.
8,456,809	B2	6/2013	Kim et al.
8,526,161	B2	9/2013	Weber et al.
8,550,689	B2	10/2013	Han et al.
8,553,397	B2	10/2013	Alameh et al.
8,564,965	B2	10/2013	Sloey et al.
D693,323	S	11/2013	Kawase et al.
8,578,561	B2	11/2013	Chuang
8,598,474	B2	12/2013	Chen
8,615,848	B2	12/2013	Mitsui
8,624,844	B2	1/2014	Behar et al.
8,625,290	B2	1/2014	Wee et al.
8,626,252	B2	1/2014	Kim et al.
8,681,056	B2	3/2014	Hobson et al.
8,764,267	B2	7/2014	Kim
8,787,016	B2	7/2014	Rothkopf et al.
2001/0018799	A1	9/2001	Lauffer et al.
2001/0055202	A1	12/2001	Templeton et al.
2004/0207568	A1	10/2004	Ooshima et al.
2004/0264118	A1	12/2004	Karidis et al.
2005/0050686	A1	3/2005	Kurokawa
2005/0280750	A1*	12/2005	Cho et al. 349/58
2006/0186906	A1	8/2006	Bottoms et al.
2007/0133156	A1	6/2007	Ligtenberg et al.
2007/0298850	A1	12/2007	Miyata et al.
2008/0062625	A1	3/2008	Batio
2008/0076298	A1	3/2008	Matsumura et al.
2008/0134468	A1	6/2008	Chen et al.
2008/0277826	A1*	11/2008	Chou et al. 264/293
2008/0278269	A1	11/2008	Ramirez et al.
2008/0316121	A1	12/2008	Hobson et al.
2009/0005132	A1	1/2009	Ogatsu
2009/0049773	A1	2/2009	Zadesky et al.
2009/0067141	A1	3/2009	Dabov et al.
2009/0070961	A1	3/2009	Chung et al.
2009/0103261	A1	4/2009	Shih
2009/0256759	A1	10/2009	Hill et al.
2009/0257207	A1	10/2009	Wang et al.
2009/0278806	A1	11/2009	Duarte et al.
2009/0282650	A1	11/2009	Jin et al.
2009/0322790	A1	12/2009	Behar et al.
2010/0053002	A1	3/2010	Wojack et al.
2010/0053876	A1	3/2010	Widmer et al.
2010/0064536	A1	3/2010	Caskey et al.
2010/0066393	A1	3/2010	Bottoms et al.
2010/0071159	A1	3/2010	Myung
2010/0076583	A1	3/2010	Wojack et al.
2010/0127726	A1	5/2010	Abe et al.
2010/0148044	A1*	6/2010	Satone et al. 250/231.13
2010/0162128	A1	6/2010	Richardson et al.
2010/0195296	A1	8/2010	Nishiwaki
2011/0043979	A1	2/2011	Saito et al.
2011/0096481	A1	4/2011	Ueno
2011/0117971	A1	5/2011	Kim et al.
2011/0128216	A1	6/2011	Renwick
2011/0138617	A1	6/2011	Clayton et al.
2011/0216064	A1	9/2011	Dahl
2011/0235304	A1	9/2011	Brown et al.
2011/0255259	A1	10/2011	Weber et al.
2011/0310549	A1	12/2011	Murakami
2012/0002360	A1	1/2012	Seo et al.
2012/0020045	A1	1/2012	Tanase
2012/0105487	A1	5/2012	Son et al.
2012/0120627	A1	5/2012	O'Connor et al.
2012/0147535	A1	6/2012	Ahn et al.
2012/0149438	A1	6/2012	Kwon
2012/0154288	A1	6/2012	Walker
2012/0182677	A1	7/2012	Seo
2012/0194448	A1	8/2012	Rothkopf
2012/0206864	A1	8/2012	Bohn et al.
2012/0206893	A1	8/2012	Bohn et al.

(56) **References Cited**

U.S. PATENT DOCUMENTS

2012/0257368	A1	10/2012	Bohn et al.
2012/0309470	A1	12/2012	Park et al.
2013/0014346	A1	1/2013	Ahn et al.
2013/0016489	A1	1/2013	Yeh et al.
2013/0021262	A1	1/2013	Chen
2013/0021265	A1	1/2013	Selim
2013/0076597	A1	3/2013	Becze
2013/0077221	A1	3/2013	Becze et al.
2013/0077236	A1	3/2013	Becze et al.
2013/0082585	A1	4/2013	Becze et al.
2013/0082955	A1	4/2013	Becze et al.
2013/0083464	A1	4/2013	Becze et al.
2013/0083466	A1	4/2013	Becze et al.
2013/0083467	A1	4/2013	Becze
2013/0083468	A1	4/2013	Becze et al.
2013/0083469	A1	4/2013	Becze et al.
2013/0083477	A1	4/2013	Becze et al.
2013/0083558	A1	4/2013	Becze
2013/0088447	A1	4/2013	Becze
2014/0001022	A1	1/2014	Weber et al.
2014/0069794	A1	3/2014	Lin et al.
2014/0307393	A1	10/2014	Park et al.

OTHER PUBLICATIONS

Official Action for U.S. Appl. No. 13/628,378, mailed Jul. 22, 2014 10 pages.
Official Action for U.S. Appl. No. 13/627,816, mailed Apr. 10, 2014 17 pages.
Official Action for U.S. Appl. No. 13/628,419, mailed Apr. 29, 2014 10 pages.
Official Action for U.S. Appl. No. 13/628,436, mailed Apr. 18, 2014 12 pages.
Official Action for U.S. Appl. No. 13/629,291, mailed Aug. 11, 2014 15 pages.
Official Action for U.S. Appl. No. 13/627,769, mailed Jan. 16, 2015 11 pages.
Official Action for U.S. Appl. No. 13/627,793, mailed Mar. 3, 2015 26 pages.
Notice of Allowance for U.S. Appl. No. 13/628,378, mailed Mar. 2, 2015 8 pages.
Notice of Allowance for U.S. Appl. No. 13/627,816, mailed Dec. 5, 2014 18 pages.
Official Action for U.S. Appl. No. 13/628,419, mailed Nov. 13, 2014 14 pages.
Official Action for U.S. Appl. No. 13/628,419, mailed Apr. 10, 2015 13 pages.
Official Action for U.S. Appl. No. 13/628,436, mailed Nov. 17, 2014 20 pages.
Notice of Allowance for U.S. Appl. No. 13/628,436, mailed Feb. 17, 2015 10 pages.
Notice of Allowance for U.S. Appl. No. 13/628,436, mailed Mar. 30, 2015 10 pages.
Notice of Allowance for U.S. Appl. No. 13/629,291, mailed Jan. 12, 2015 10 pages.
Official Action for U.S. Appl. No. 13/629,068, mailed Dec. 31, 2014 17 pages.
Official Action for U.S. Appl. No. 13/629,030, mailed Oct. 6, 2014 10 pages.
Official Action for U.S. Appl. No. 13/628,987, mailed Jan. 27, 2015 10 pages.

"Google Image Result Fujitsu Dual Screen Phone," ComputerRiver, Oct. 7, 2010, [retrieved Apr. 18, 2011], 1 page. Retrieved from: www.google.com/imgres?imgurl=http://www.computerriver.com/images/dual-screen-phone.jpg.
"Google Image Result for LG Dual Touch Screen Concept Phone by Eugene Kim," FGADGETS, Aug. 2010, [retrieved Apr. 18, 2011], 1 page. Retrieved from: www.google.com/imgres?imgurl=http://fgadgets.com/wp-content/uploads/2010/08/lg-dual-touch-screen-phone-Eugene-Kim-01.jpg.
"Google Image Result for Fujitsu Dual Screen Phone,"GSM DOME, Oct. 2010, [retrieved Apr. 18, 2011], 1 page. Retrieved from: www.google.com/imgres?imgurl=http://www.gsmdome.com/wp-content/uploads/2010/10/fujitsu-dual-screen-phone_w2cP7_54.jpg.
"Google Image Result for Kyocera Echo," Hardwaresphere, Feb. 2011, [retrieved Apr. 18, 2011], 1 page. Retrieved from: www.google.com/imgres?imgurl=http://www.hardwaresphere.com/wp-content/uploads/2011/02/kyocera-echo-dual-screen-android-phone-for-sprint-network.jpg.
"Google Image Result for HTC Triple Viper,"SantaFeMods, Apr. 2010, [retrieved Apr. 18, 2011], 1 page. Retrieved from:www.google.com/imgres?imgurl=http://www.santafemods.com/Forum/AndroidForums/htcTripleViper.png.
"Google Image Result for Dual-Screen Phone,"NetShet.org, Feb. 2011, [retrieved Apr. 18, 2011], 1 page. Retrieved from: www.google.com/imgres?imgurl=http://www.netshet.org/wp-content/uploads/2011/02/Dual-Scree . . . .
"Kyocera Echo Hands-on," Engadget, © 2012, [Retrieved from the internet on Aug. 17, 2012 from <www.engadget.com/gallery/kyocera-echo-hands-on/#3855047>] 34 pages.
"Lexan* EXL resin," SABIC Innovative Plastics™, Jun. 2008, 24 pages, retrieved from [kbam.geampod.com/KBAM/Reflection/Assets/Thumbnail/10845_12. pdf].
Website entitled "Lapdock™ for Motorola ATRIX," Motorola Mobility, Inc, 2011, [retrieved on Apr. 18, 2011], 1 page. Retrieved from: www.motorola.com/Consumers/US-EN/Consumer-Product-and-Services/Mobile+Ph . . . .
Website entitled "Motorola ATRIX 4G Laptop Dock Review," phoneArena.com, posted Mar. 2, 2011, [retrieved on Apr. 18, 2011], 6 pages. Retrieved from: www.phonearena.com/reviews/Motorola-ATRIX-4G-Laptop-Dock-Review_id2667.
Burns, C., "Motorola ATRIX 4G Laptop Dock Review," Android Community, Feb. 20, 2011, [retrieved on Apr. 18, 2011], 5 pages. Retrieved from: www.androidcommunity.com/motorola-atrix-4g-laptop-dock-review-20110220/.
Catacchio, "This smartphone has two huge screens . . . that rotate," The Next Web, Inc., Oct. 7, 2010, [retrieved on Jul. 21, 2011], 2 pages. Retrieved from: www.thenextweb.com/asia/2010/10/07/this-smartphone-has-two-huge-screens-that-rotate/.
Posted by Harman03, "Kyocera Echo Dual-screen Android Phone," posted 4 weeks from Apr. 18, 2011, [retrieved on Apr. 18, 2011], 3 pages. Retrieved from: www.unp.me/f106/kyocera-echo-dual-screen-android-phone-143800/.
Martin "Sony's new S2 tablet," c|net, Jul. 13, 2011, 2 pages, retrieved from [news.cnet.com/2300-1041_3-10008595-6.html?tag=mncol;txt].
Stein, S., "How does the Motorola Atrix 4G Lapdock compare with a laptop?" Crave—CNET, Feb. 9, 2011 [retrieved on Apr. 18, 2011], 7 pages. Retrieved from: www.news.cnet.com/8301-17938_105-20031251-1.html.

* cited by examiner

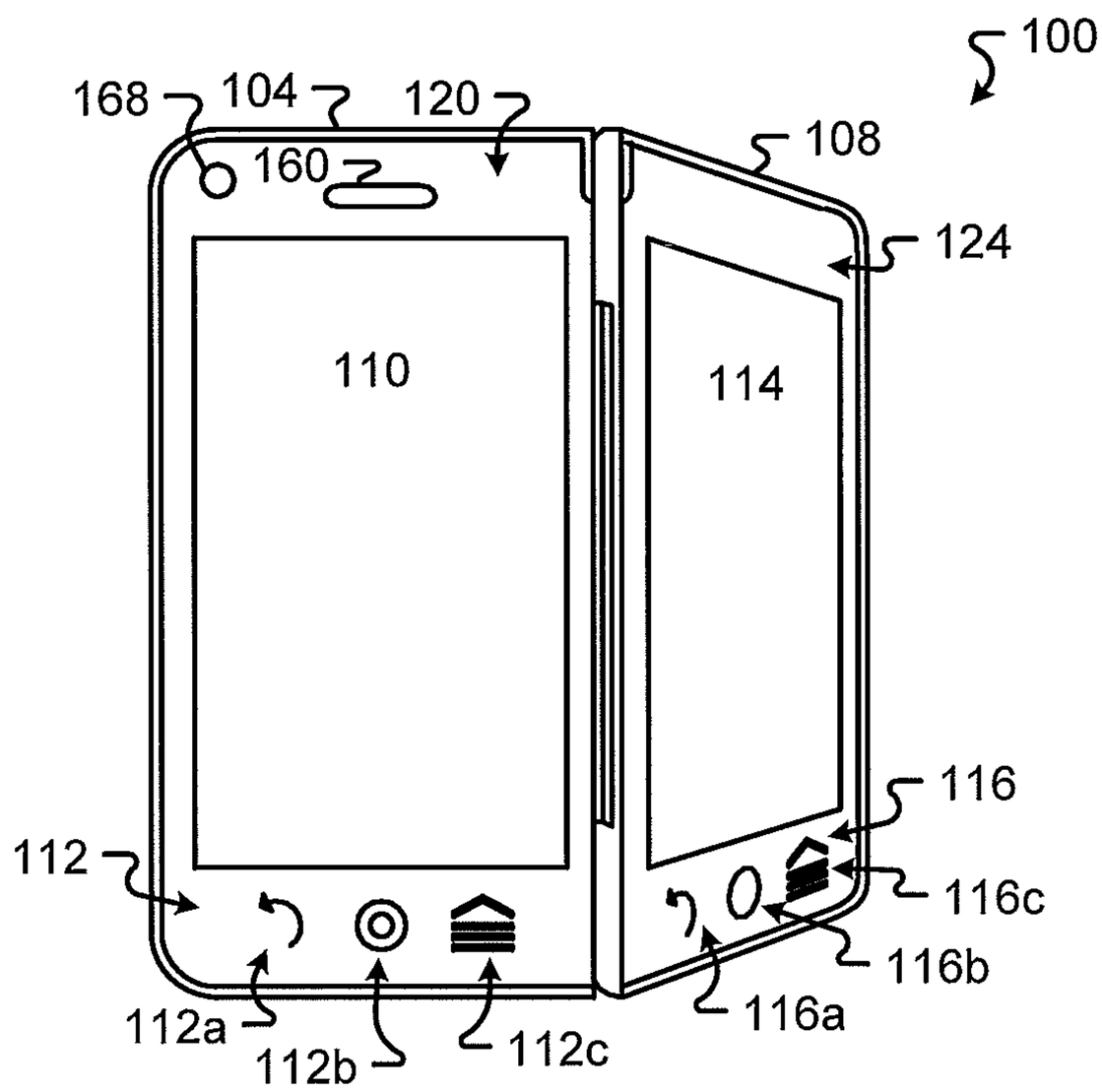
100
168
104
120
160
108
124
110
114
116
112
116c
116b
116a
112a
112b
112c

FIG. 1A

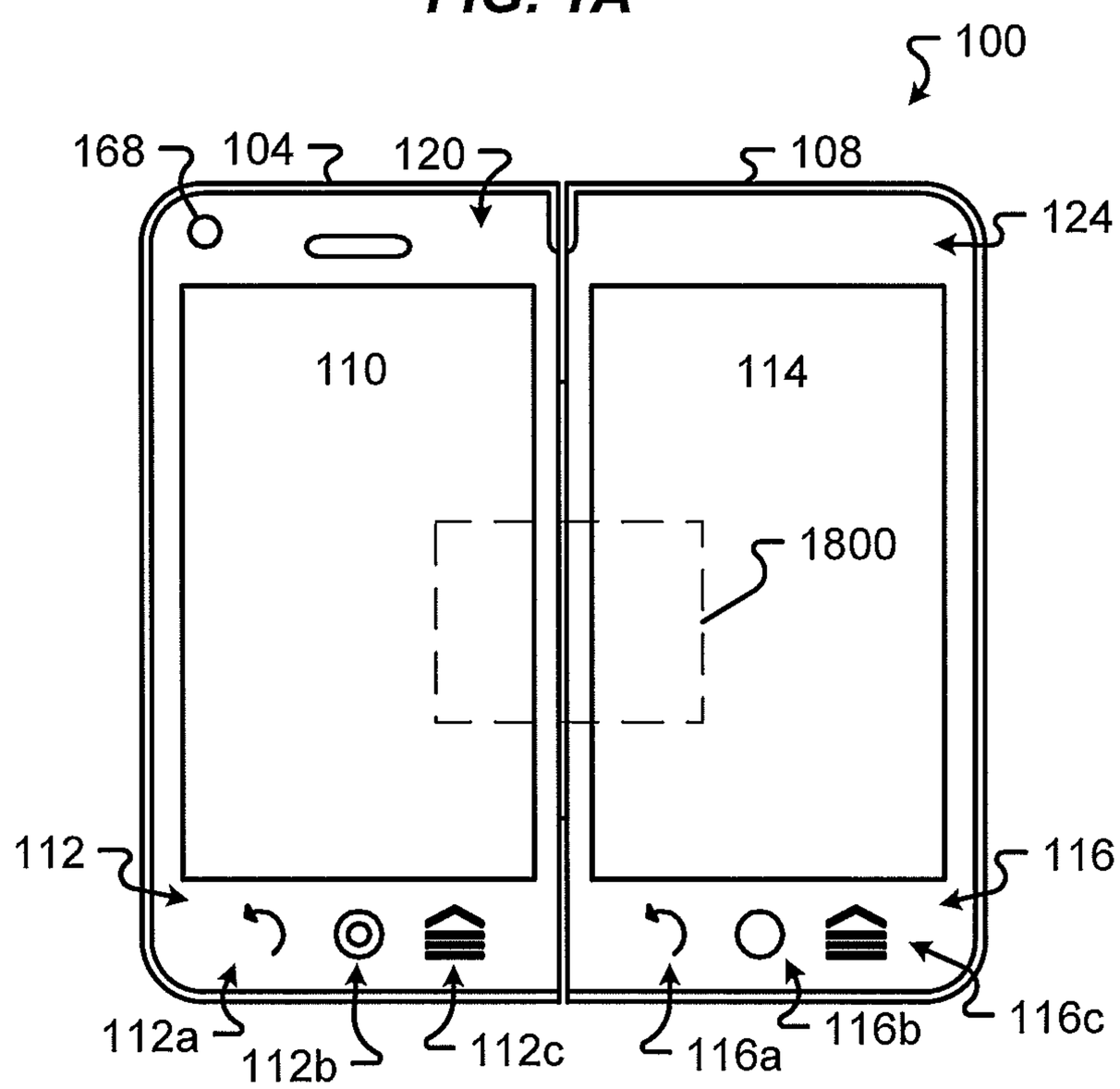
100
168
104
120
108
124
110
114
1800
112
116
112a
112b
112c
116a
116b
116c

FIG. 1B

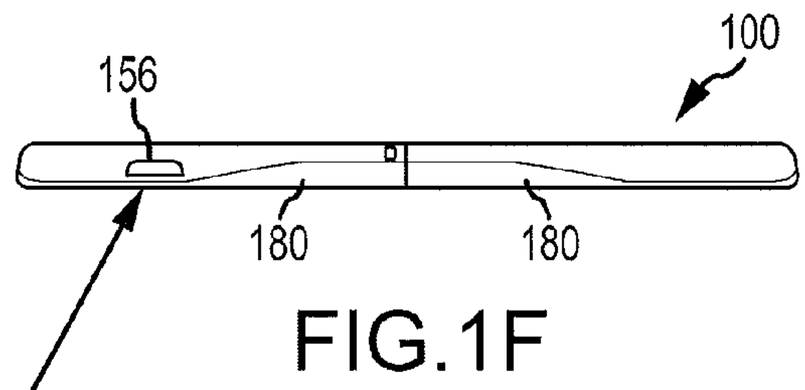

FIG.1F

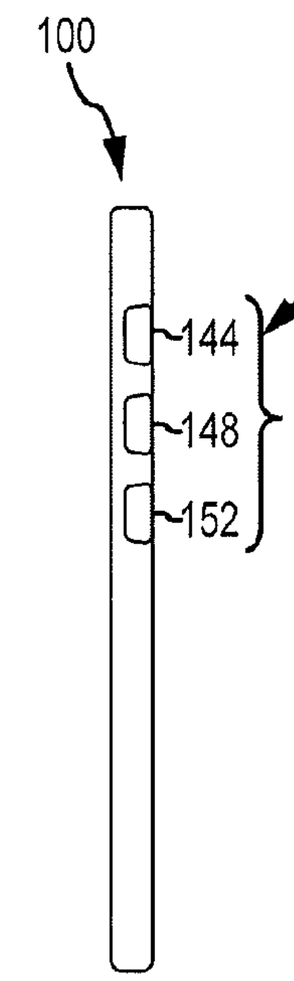

FIG.1E

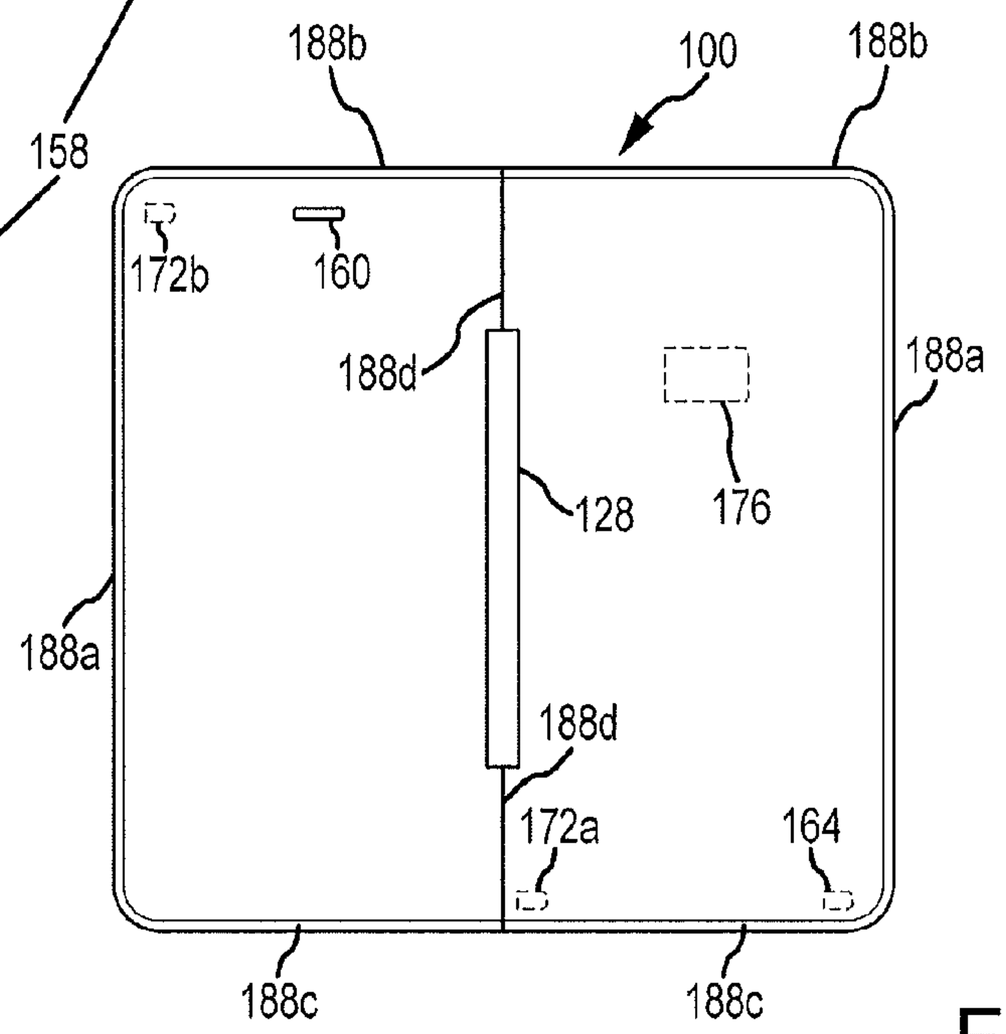

FIG.1C

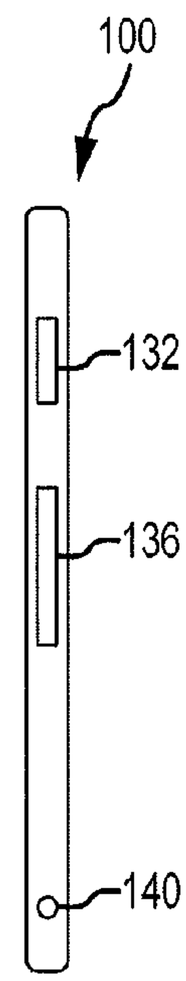

FIG.1D

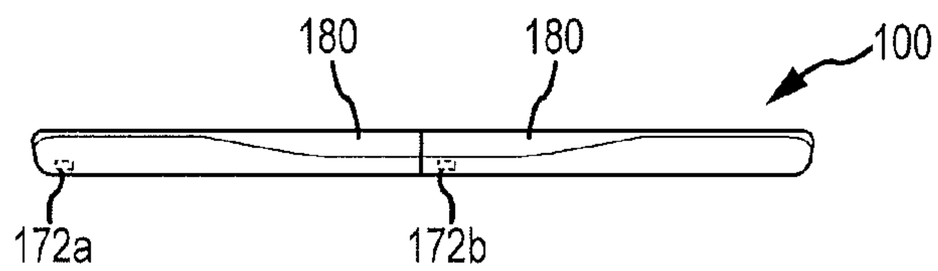

FIG.1G

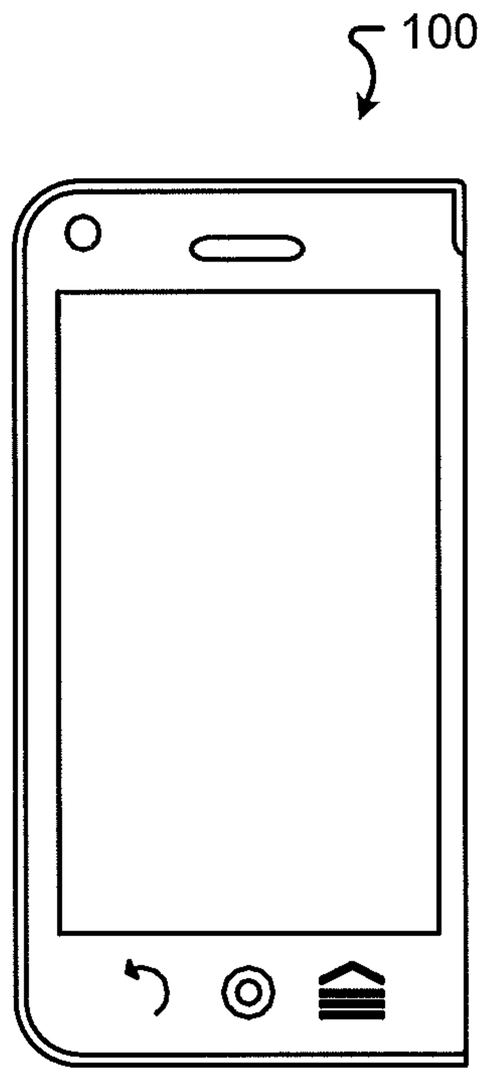

FIG. 1H

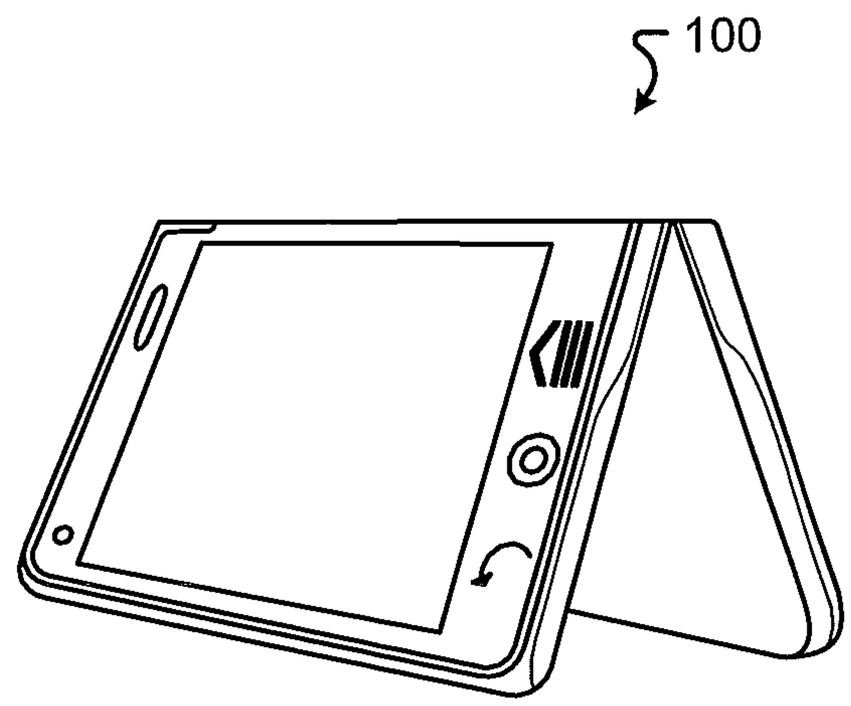

FIG. 1I

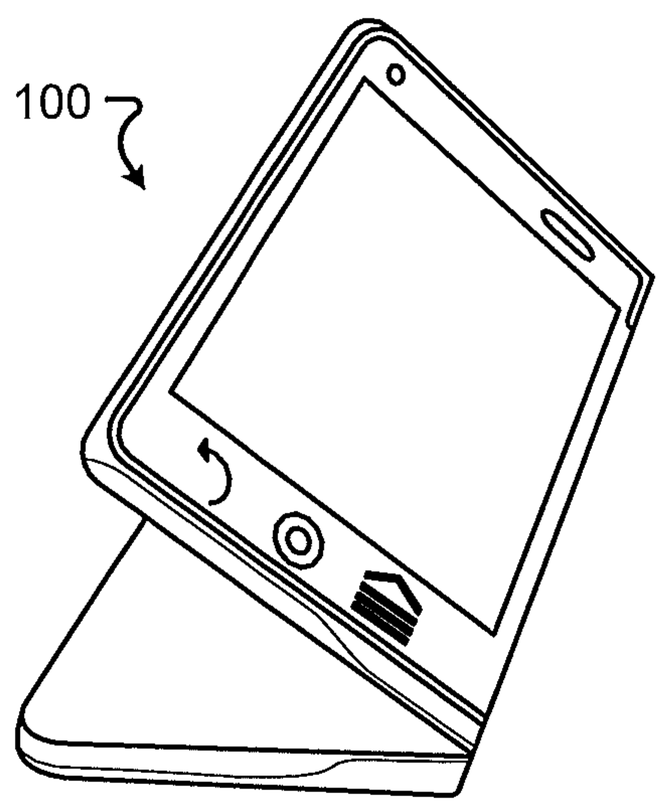

FIG. 1J

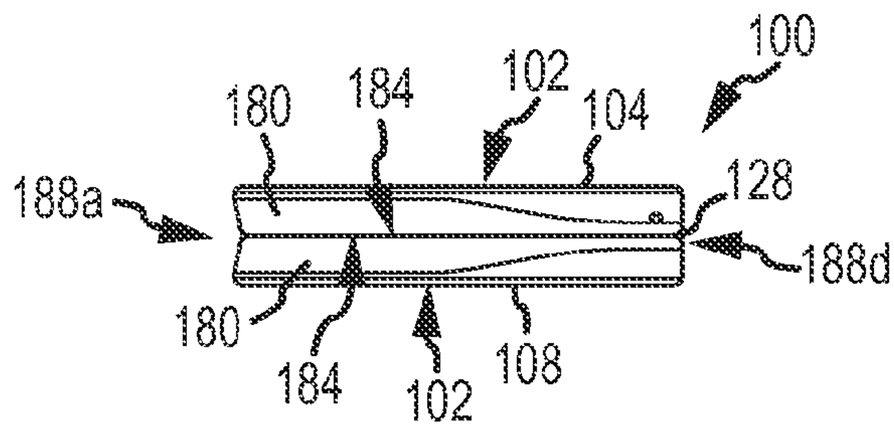

FIG.1K

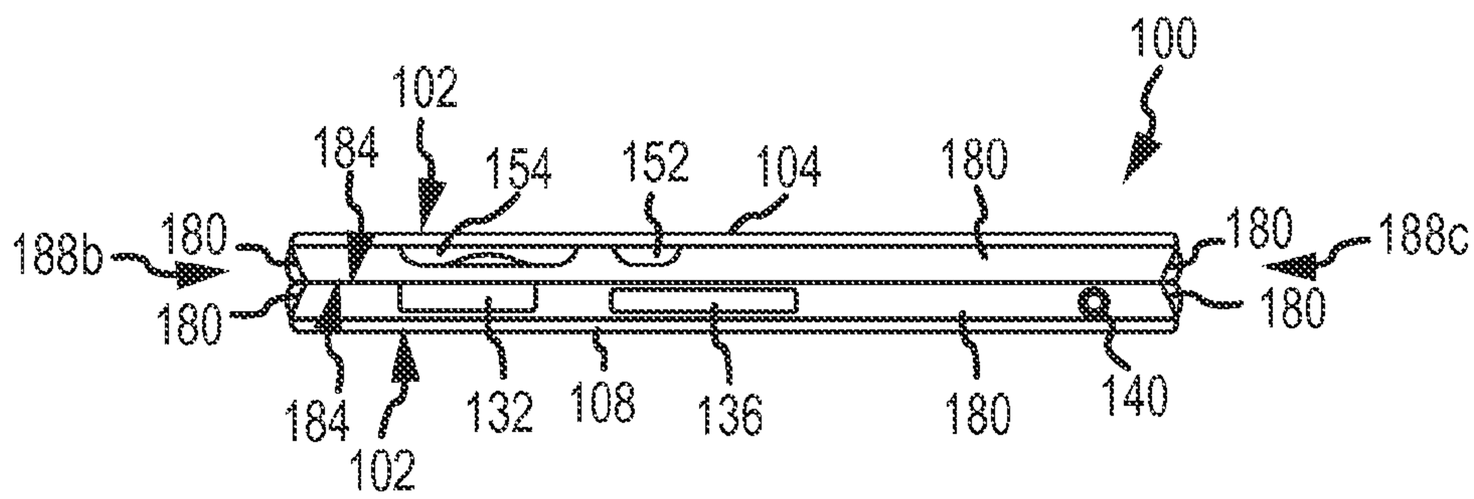

FIG.1L

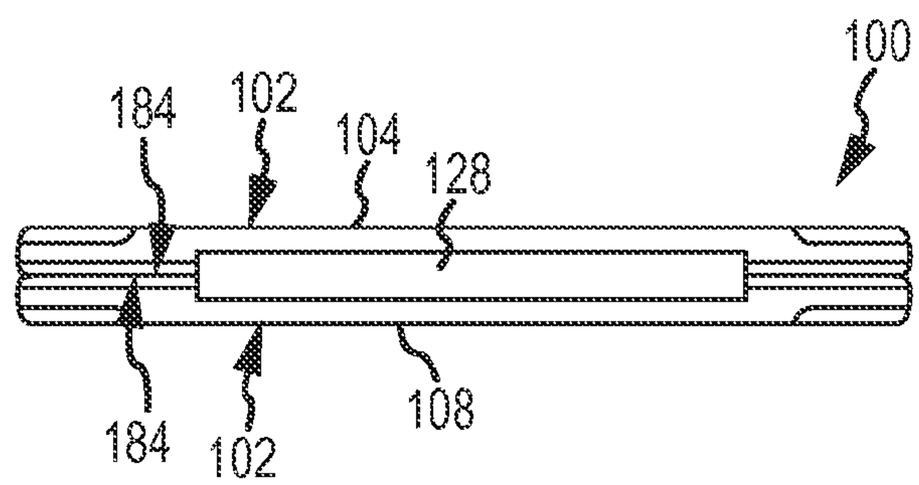

FIG.1M

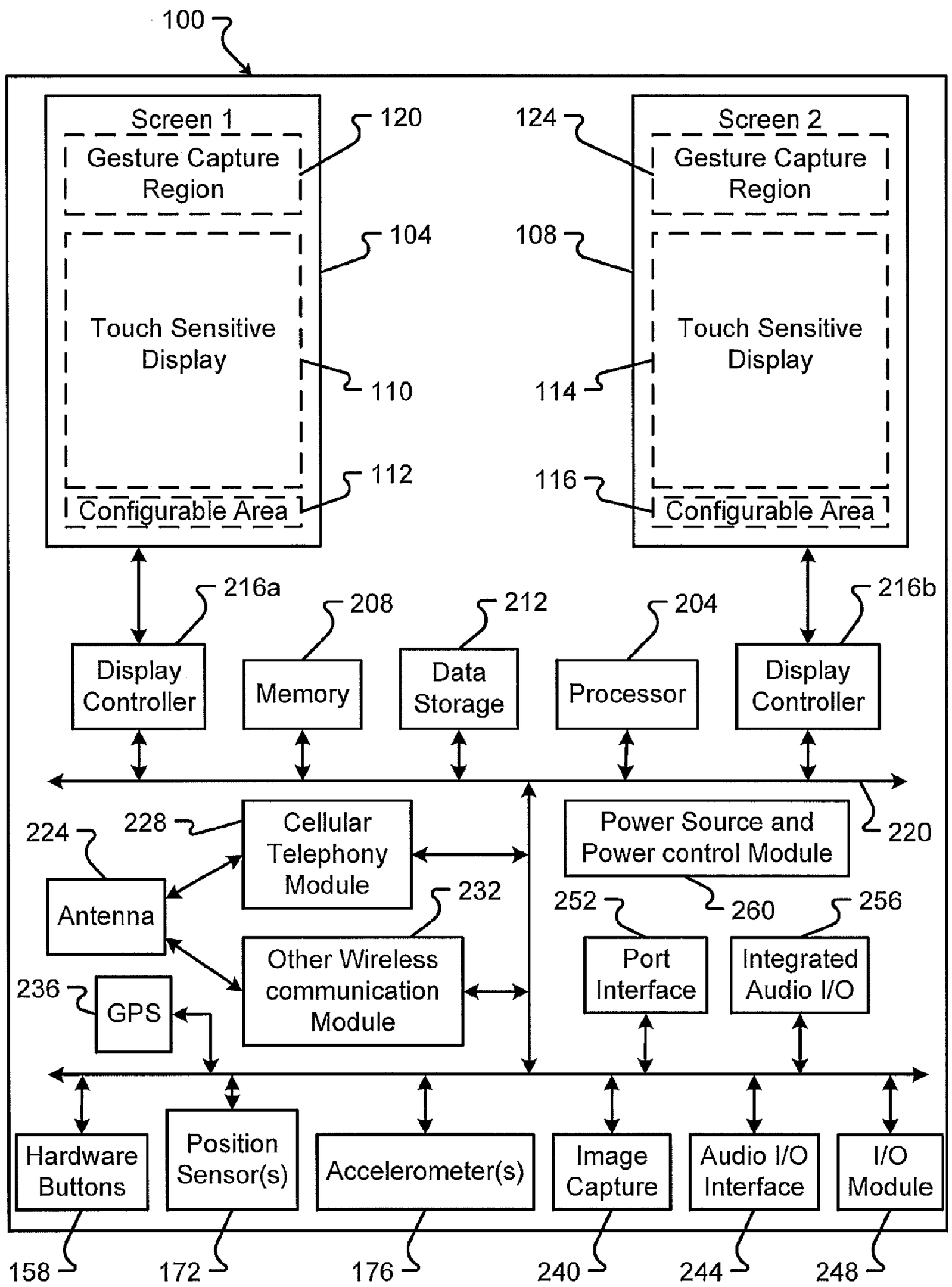
100
Screen 1
Gesture Capture Region
120
Touch Sensitive Display
104
110
112
Configurable Area
124
Screen 2
Gesture Capture Region
108
Touch Sensitive Display
114
116
Configurable Area
216a
208
212
204
216b
Display Controller
Memory
Data Storage
Processor
Display Controller
224
228
Cellular Telephony Module
Power Source and Power control Module
220
Antenna
232
252
260
256
Other Wireless communication Module
Port Interface
Integrated Audio I/O
236
GPS
Hardware Buttons
Position Sensor(s)
Accelerometer(s)
Image Capture
Audio I/O Interface
I/O Module
158
172
176
240
244
248

FIG. 2

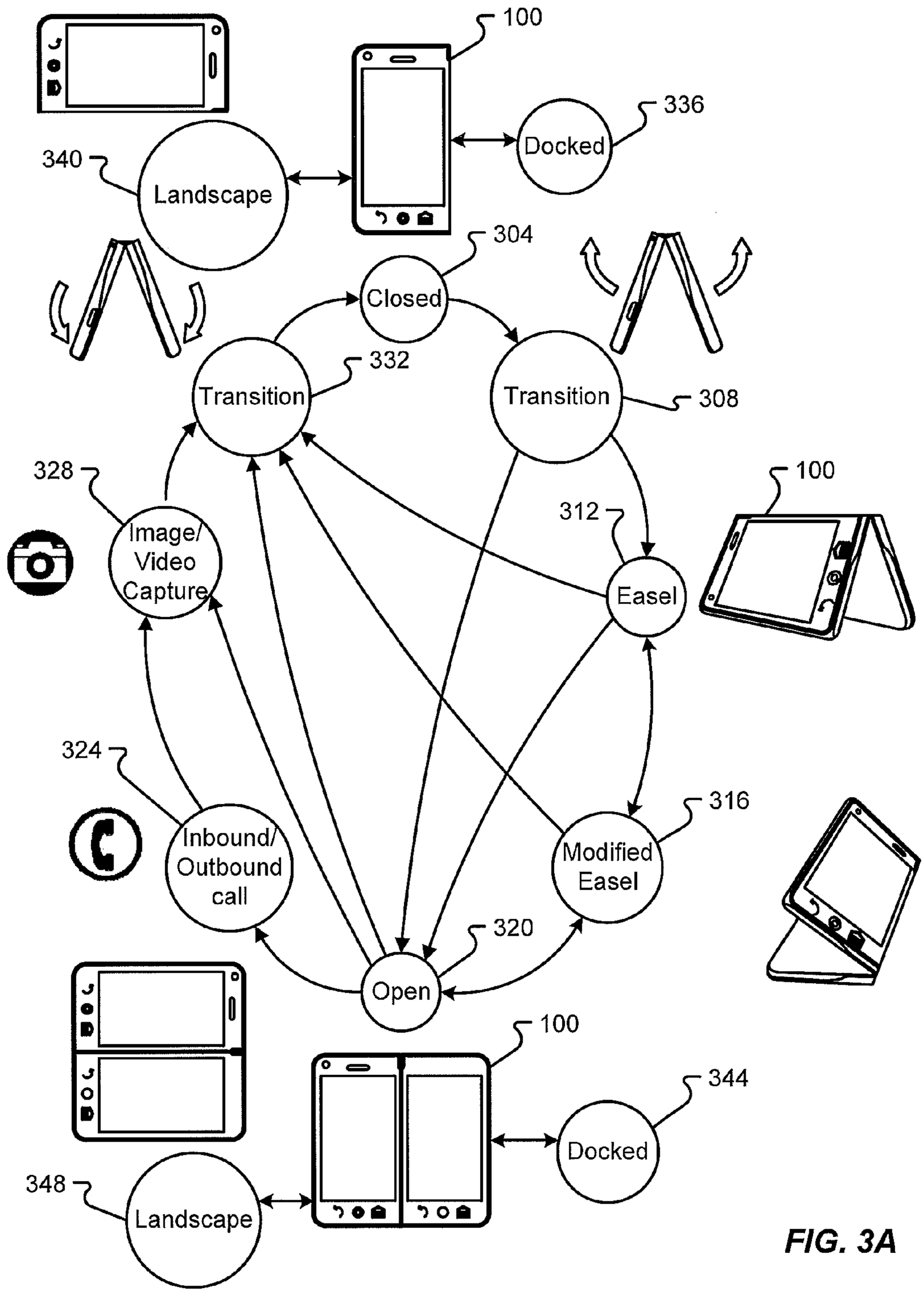
100
336
Docked
340
Landscape
304
Closed
332
Transition
Transition
308
328
Image/
Video
Capture
312
Easel
100
324
Inbound/
Outbound
call
316
Modified
Easel
320
Open
100
344
Docked
348
Landscape

FIG. 3A

376 360 352 356

		PORTRAIT						LANDSCAPE					
		OPEN	CLOSED	EASEL	MODIFIED EASEL	PHONE	IMAGE / VIDEO	OPEN	CLOSED	EASEL	MODIFIED EASEL	PHONE	IMAGE / VIDEO
PORTRAIT	OPEN	X	HT	HT	HT	P	I	AT	HAT	**HAT**	HAT	P	I
	CLOSED	HT	X	HAT	HAT	P	I	HAT	AT	HAT	HAT	P	I
	EASEL	HT	HT	X	X	P	I	HAT	HAT	HAT	HAT	P	I
	PHONE	HT	X	HT	HT	X	I	HAT	HAT	HAT	HAT	X	I
	IMAGE / VIDEO	HT	HT	HT	X	P	X	HAT	HAT	HAT	HAT	X	HAT
LANDSCAPE	OPEN	AT	HAT	HAT	HAT	P	I	X	HT	HAT	HAT	P	I
	CLOSED	HAT	AT	HAT	HAT	P	I	HT	X	HAT	HAT	P	I
	EASEL	HAT	HAT	HAT	HAT	P	I	HT	HT	X	HAT	P	I
	MODIFIED EASEL	HAT	HAT	HAT	HAT	P	I	HT	HT	HAT	X	P	I
	IMAGE / VIDEO	HAT	HAT	HAT	HAT	HAT	AT	HT	HT	HT	HAT	P	X
	DOCKED	DOCKING SIGNAL											

364 368 372

Key:
H - Hall Effect Sensor(s)
a - accelerometer(s)
T- Timer
P – communications Trigger
I – Image / Video capture Request

FIG. 3B

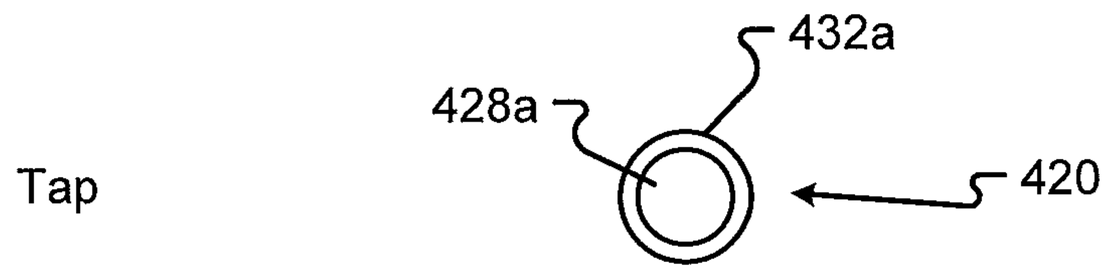

FIG. 4A

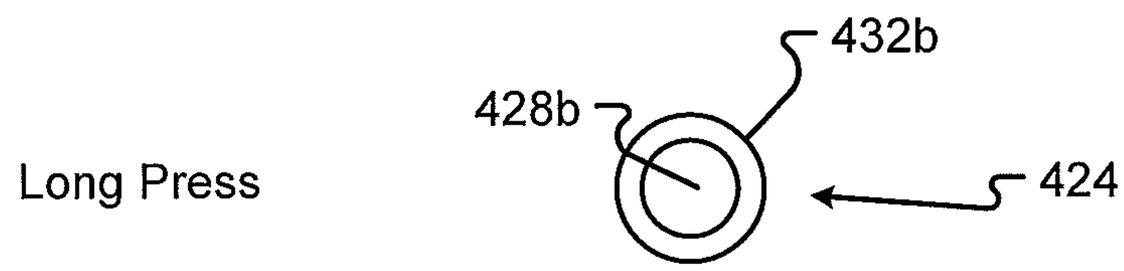

FIG. 4B

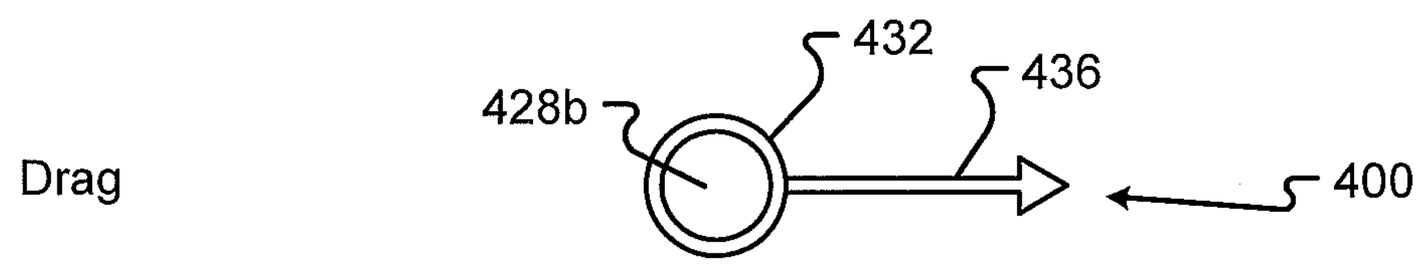

FIG. 4C

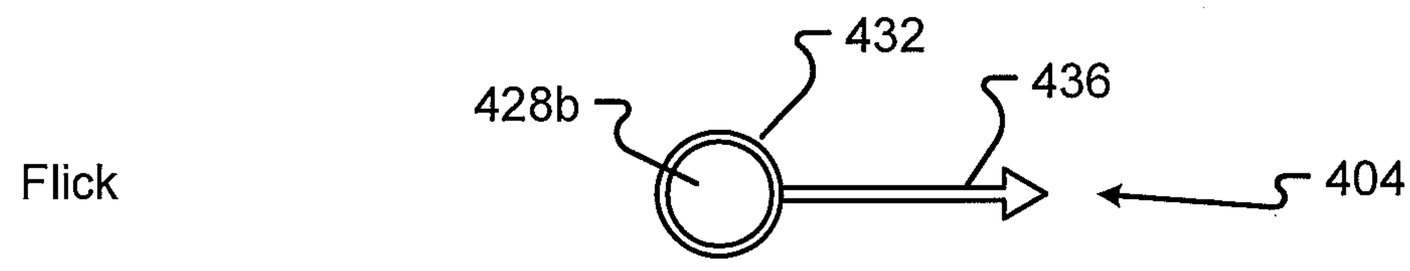

FIG. 4D

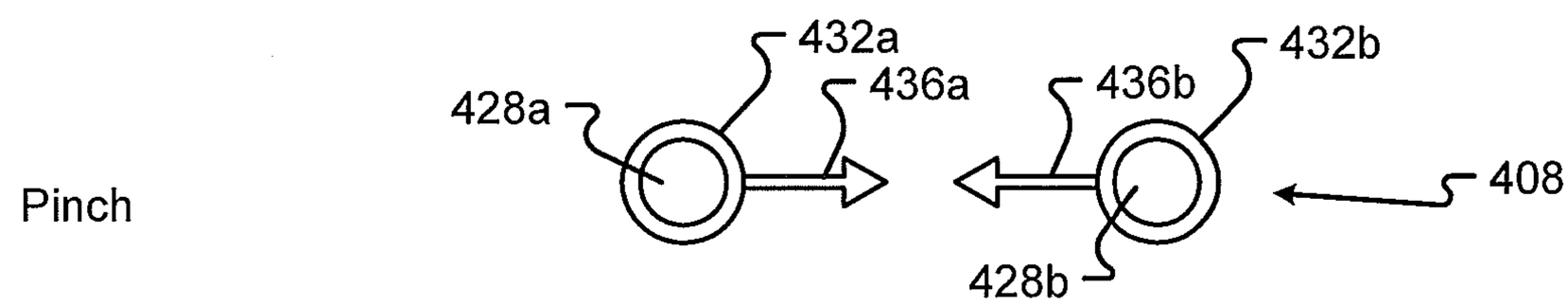

FIG. 4E

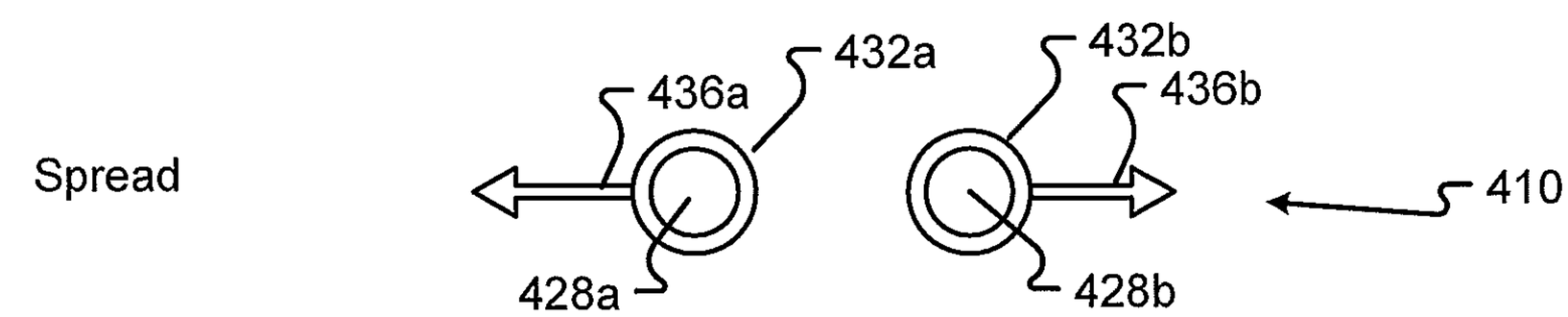

FIG. 4F

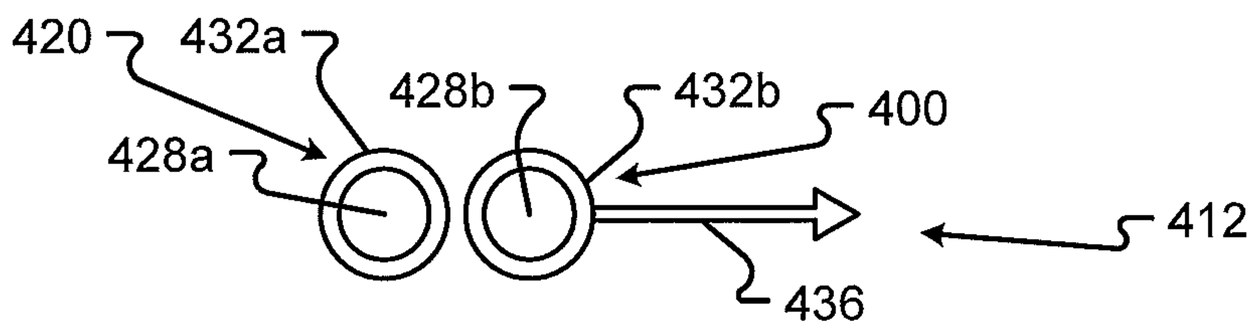
420
432a
428b
432b
400
428a
412
436

FIG. 4G

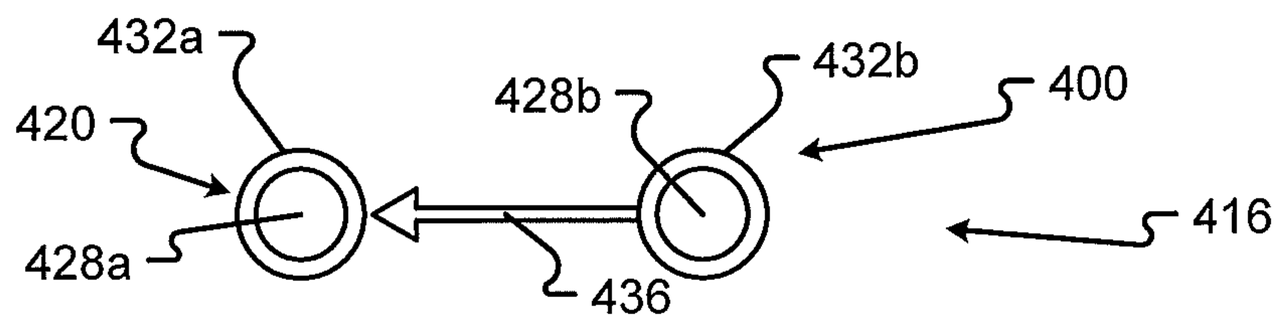
432a
432b
400
428b
420
416
428a
436

FIG. 4H

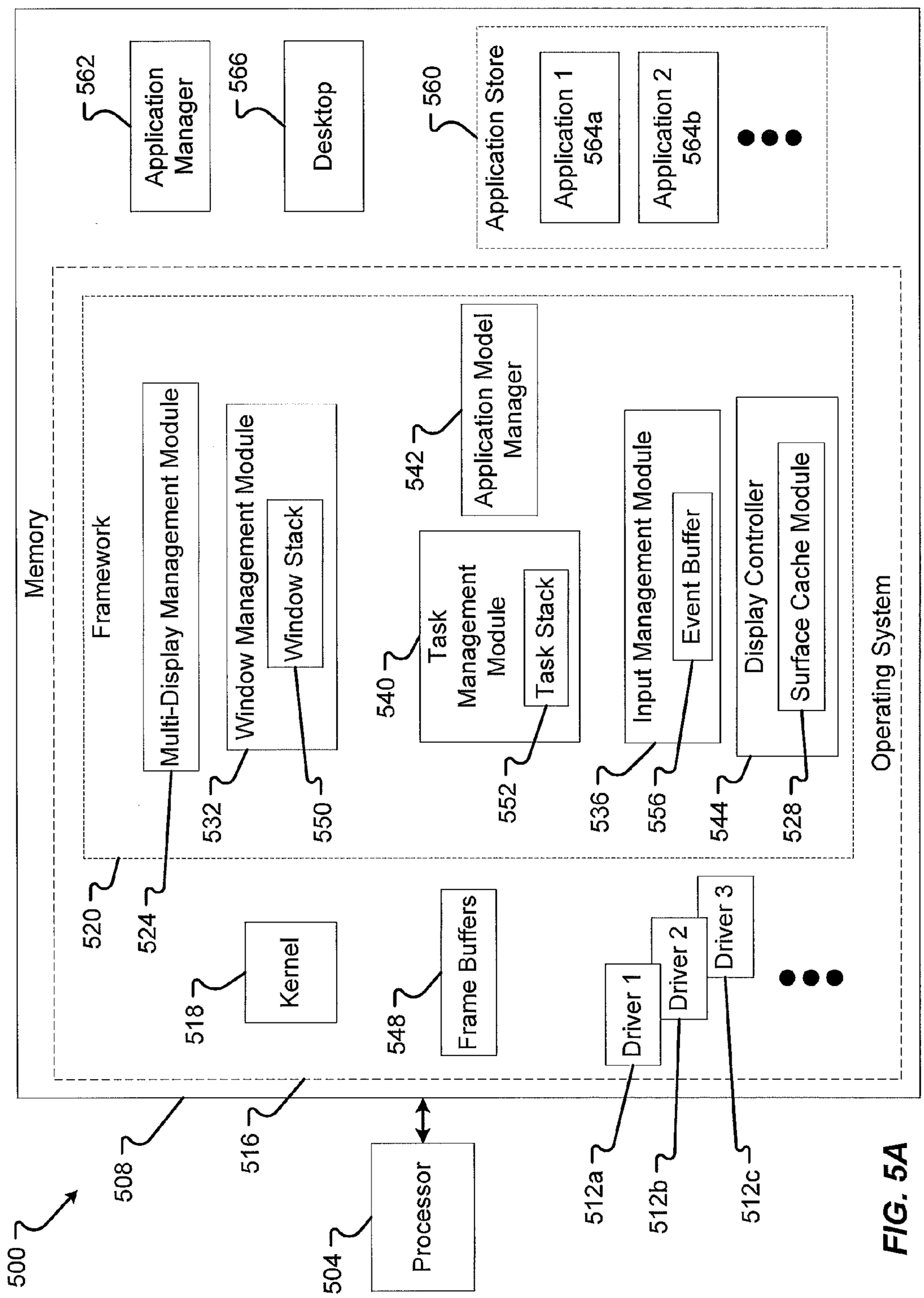
500
Memory
508
516
Processor
504
Operating System
Framework
520
Multi-Display Management Module
524
Kernel
518
Window Management Module
532
Window Stack
550
Frame Buffers
548
Application Model Manager
542
Task Management Module
540
Task Stack
552
Input Management Module
536
Event Buffer
556
Display Controller
544
Surface Cache Module
528
Driver 1
512a
Driver 2
512b
Driver 3
512c
Application Manager
562
Desktop
566
Application Store
560
Application 1
564a
Application 2
564b

FIG. 5A

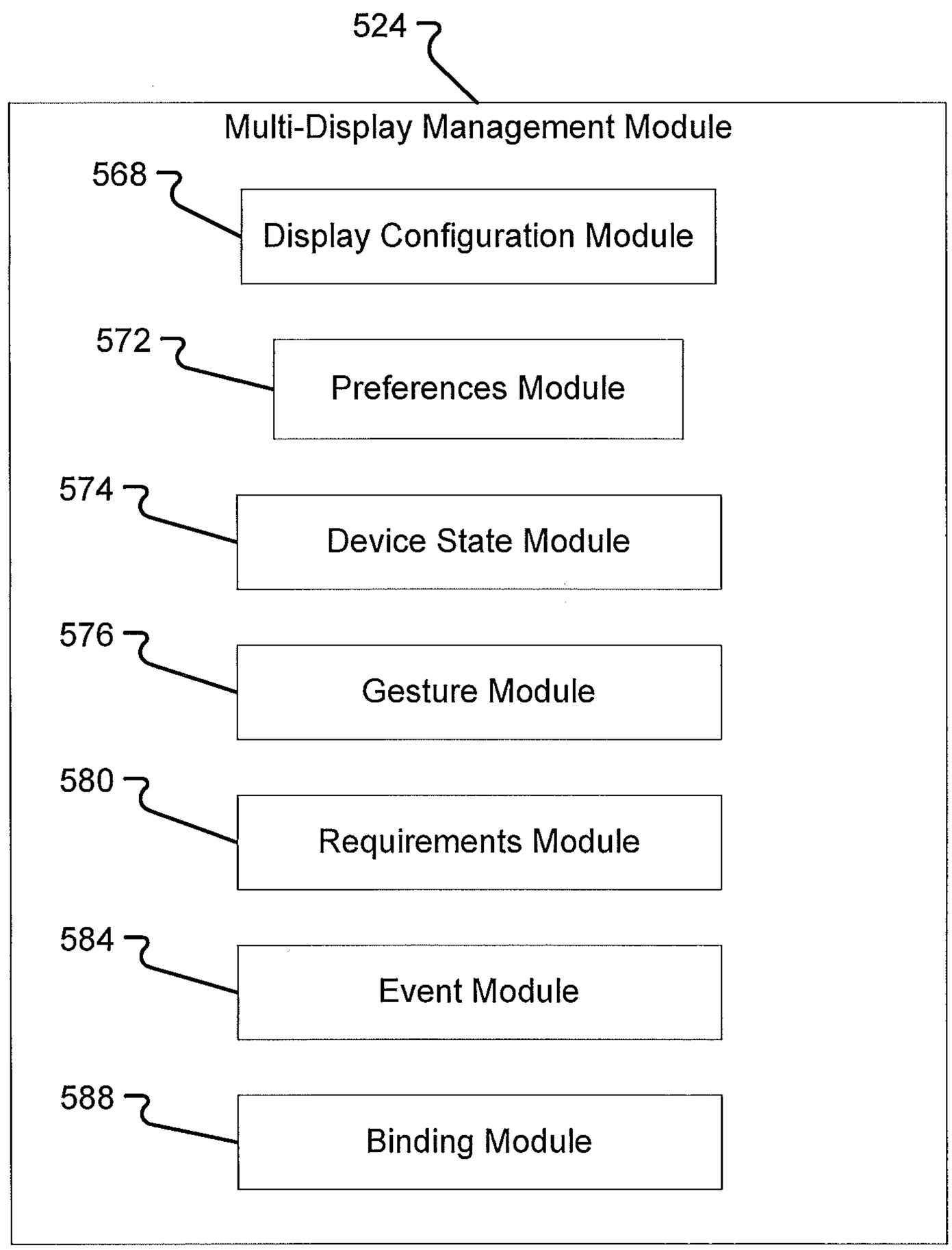
524
Multi-Display Management Module
568
Display Configuration Module
572
Preferences Module
574
Device State Module
576
Gesture Module
580
Requirements Module
584
Event Module
588
Binding Module

FIG. 5B

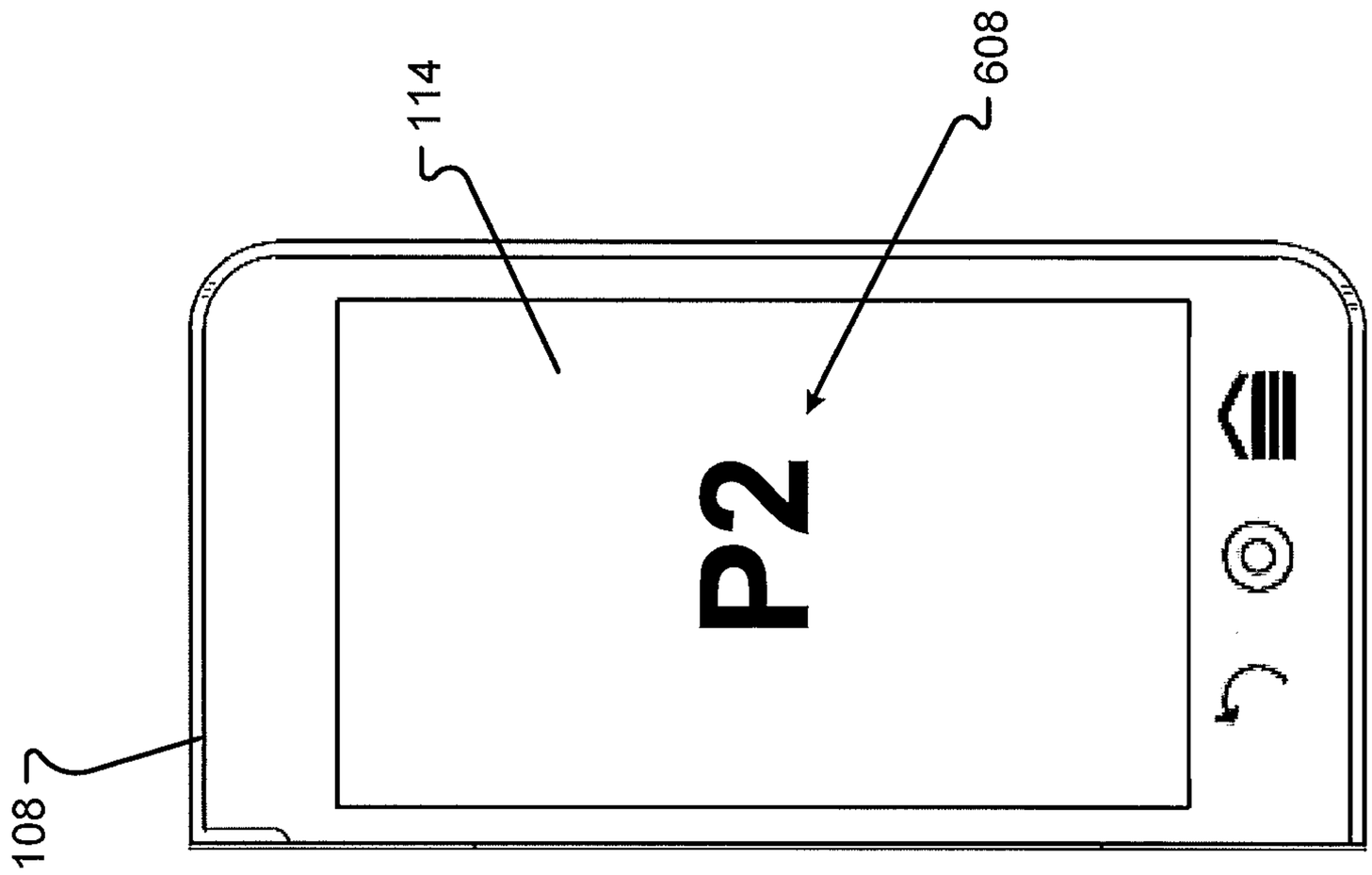

FIG. 6B

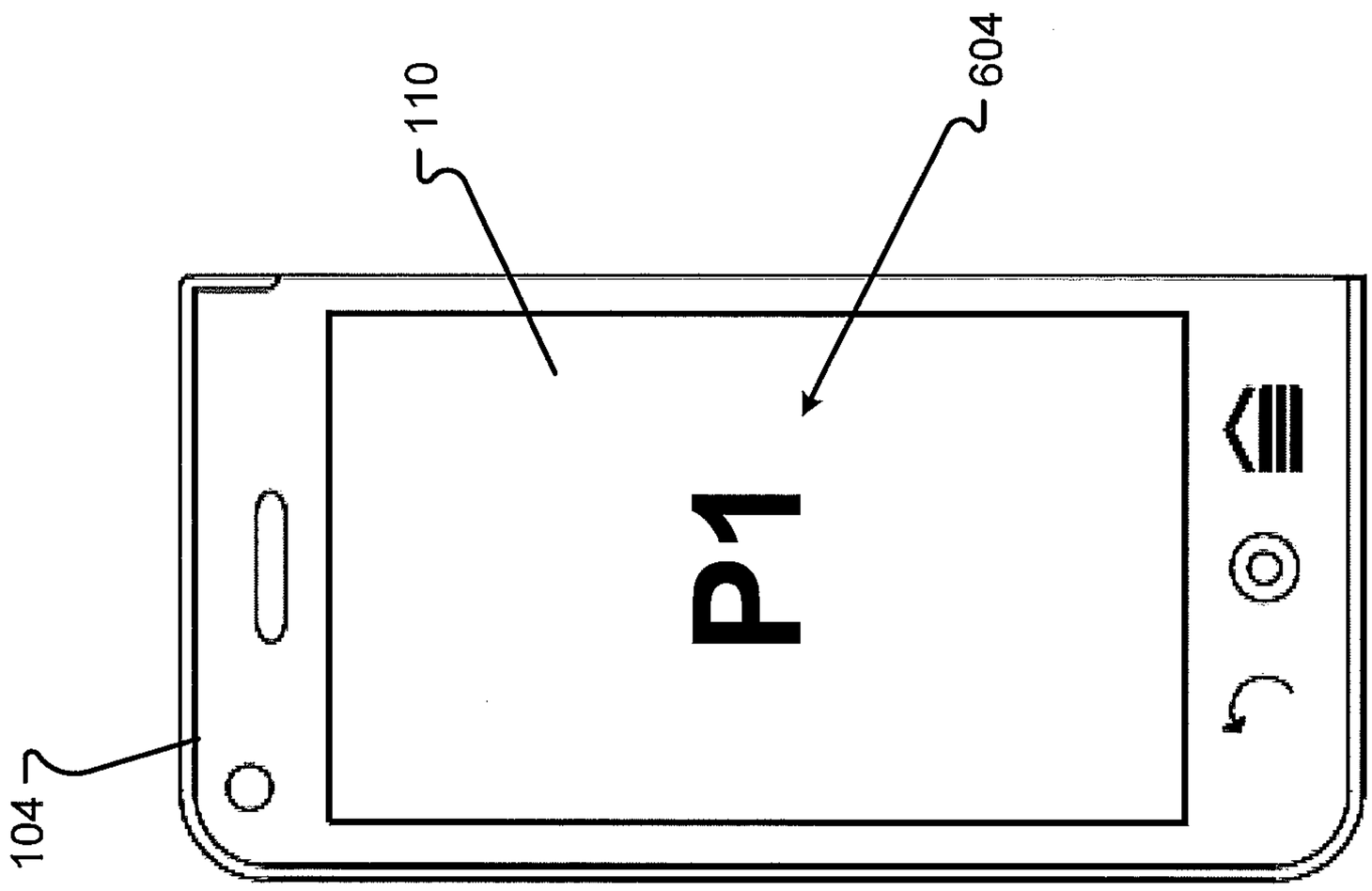

FIG. 6A

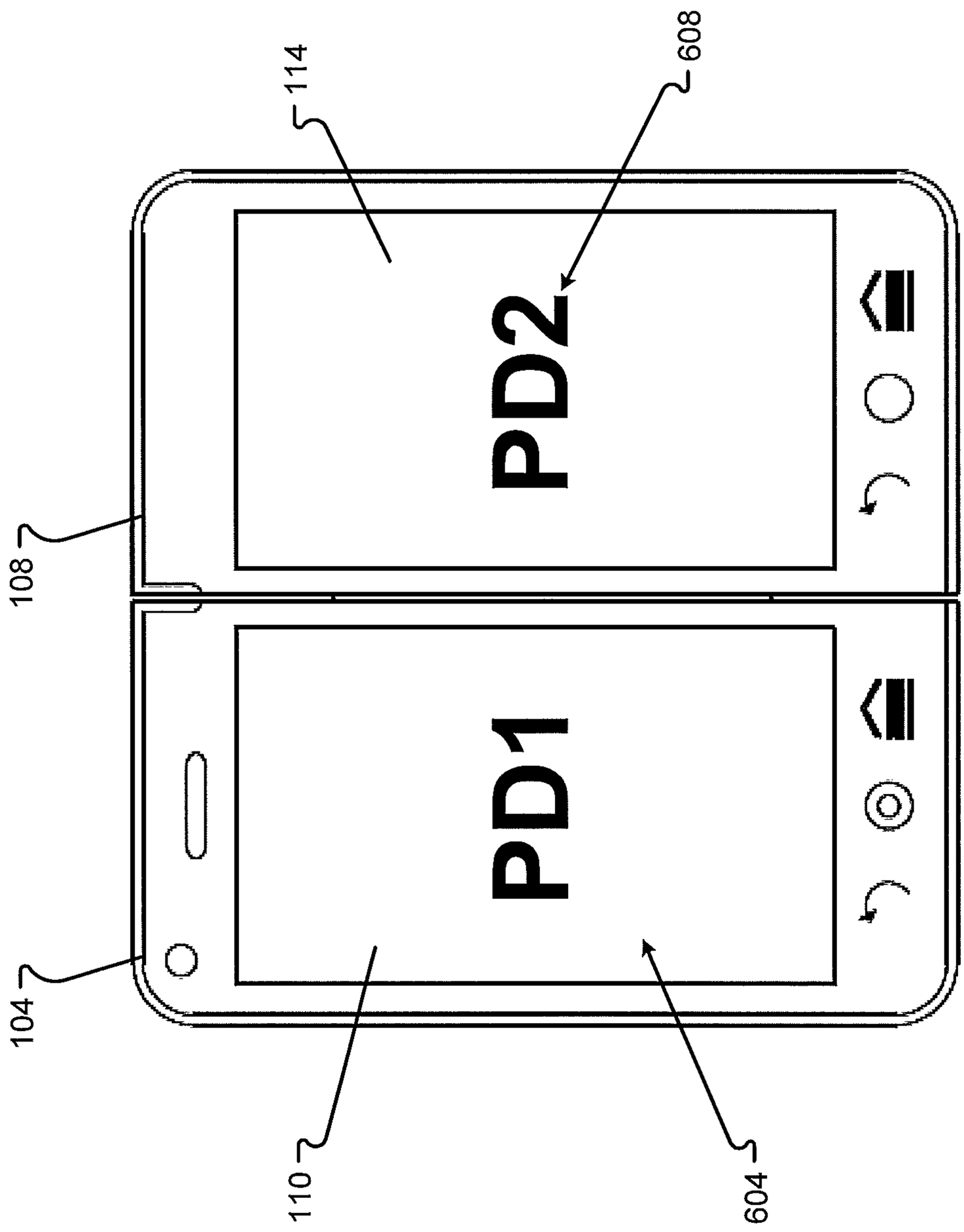

FIG. 6C

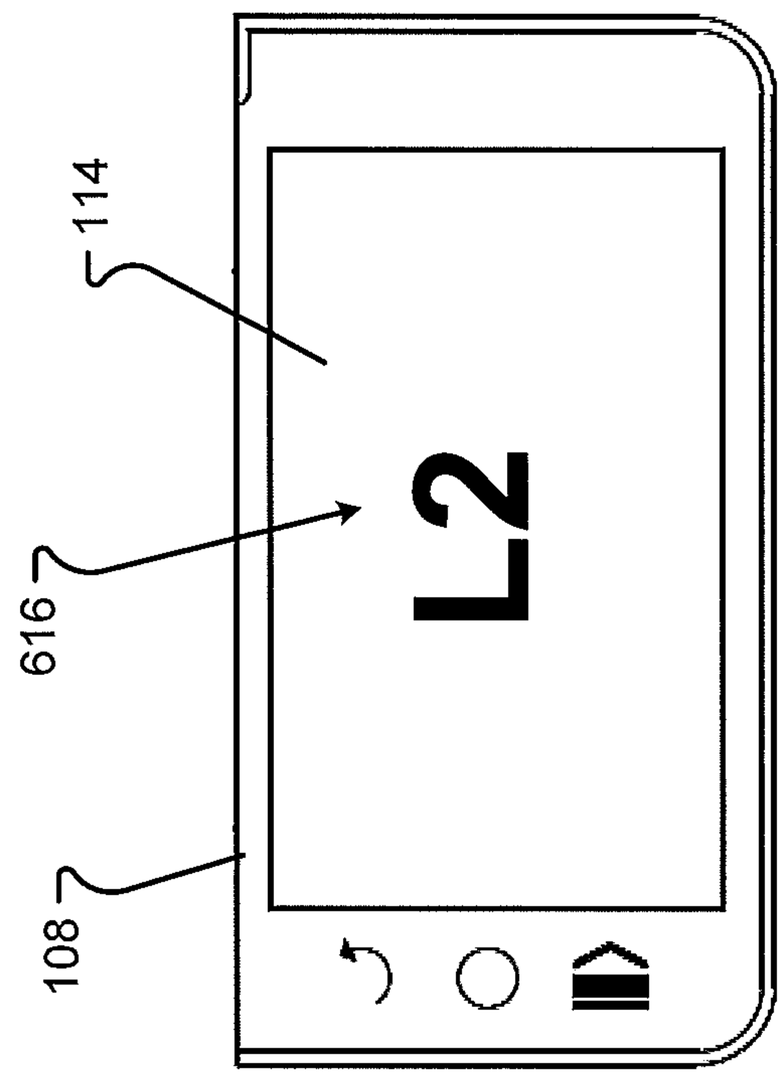

FIG. 6E

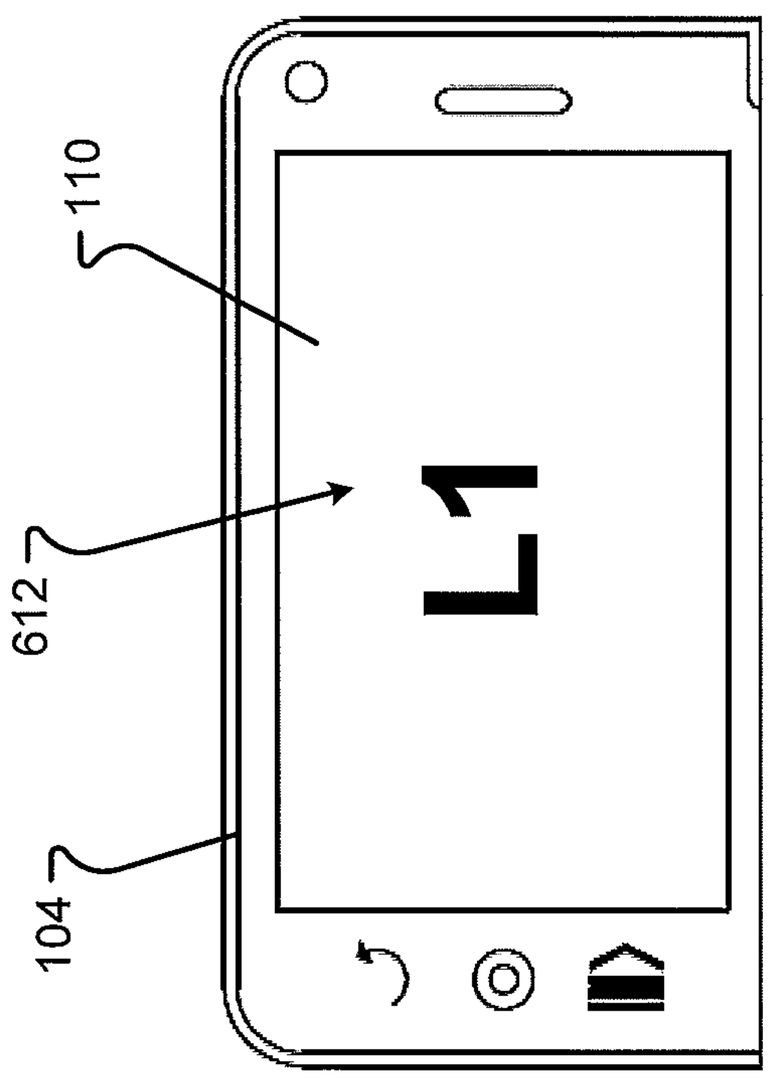

FIG. 6D

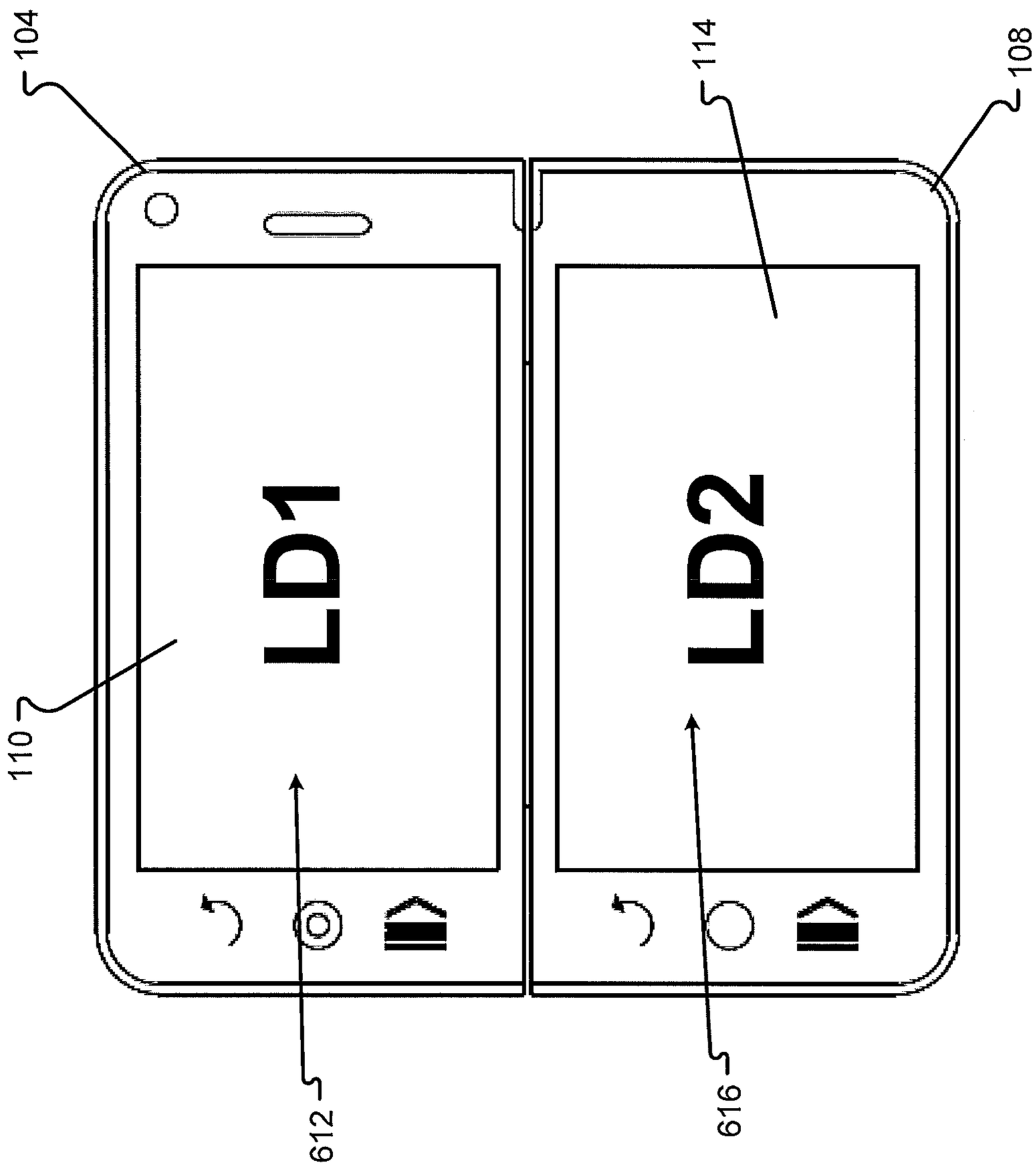

FIG. 6F

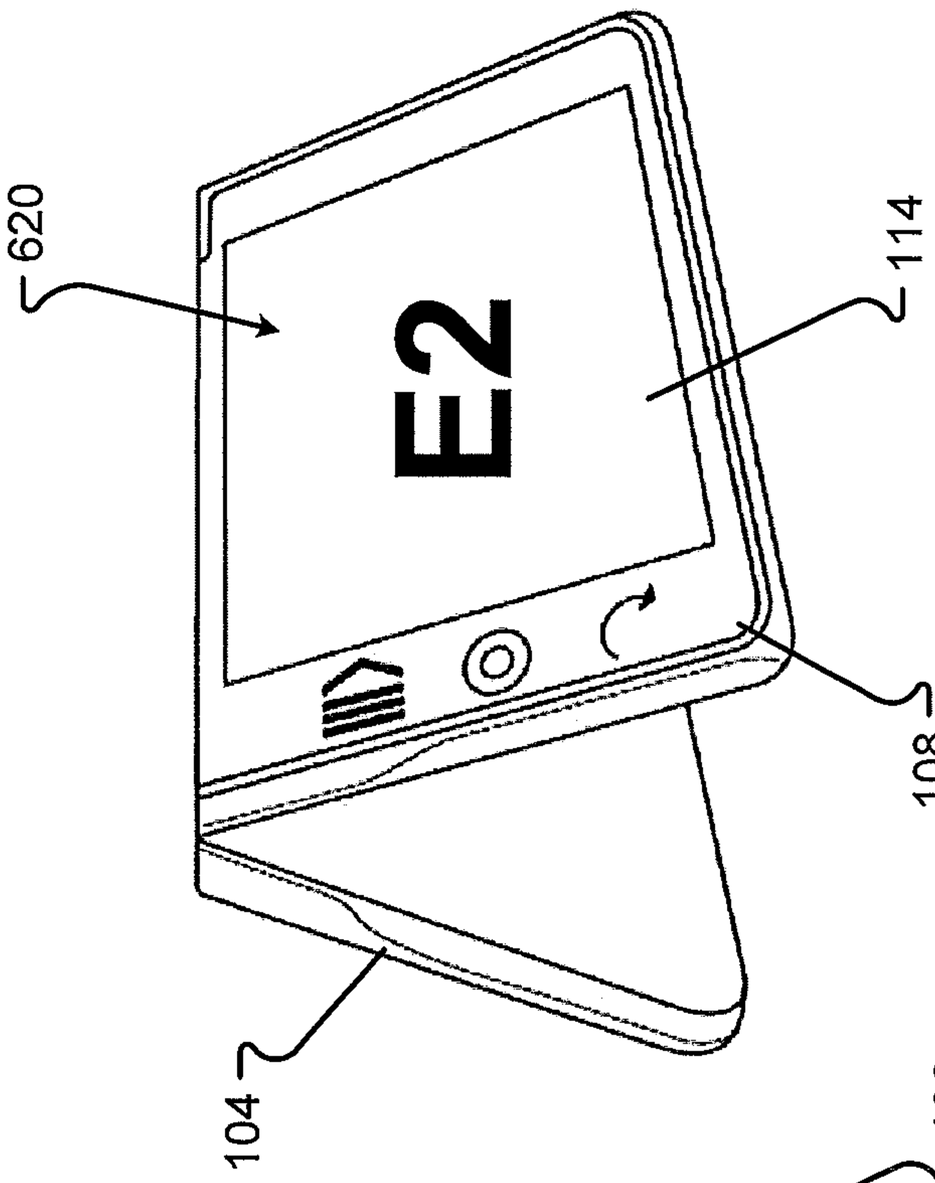

FIG. 6H

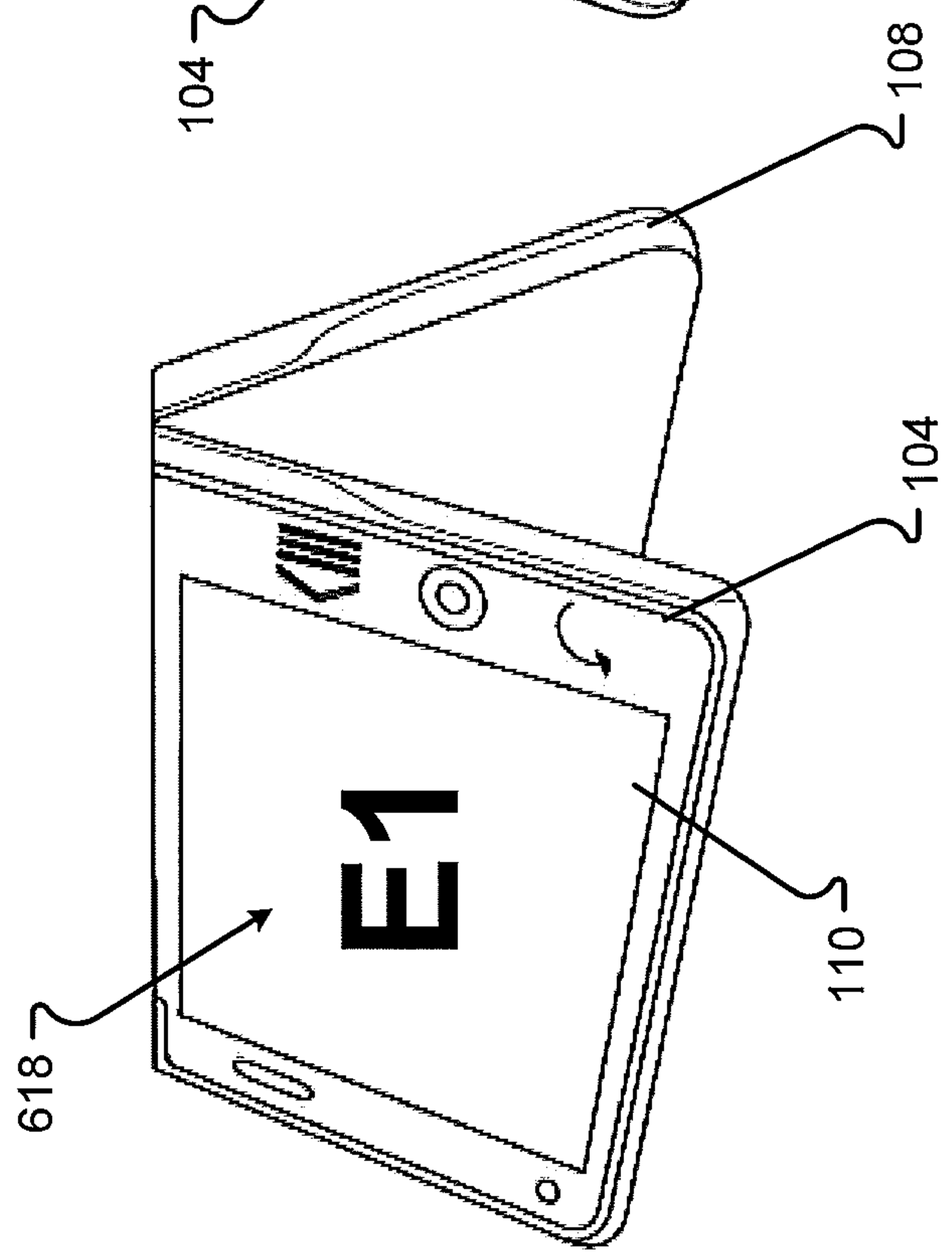

FIG. 6G

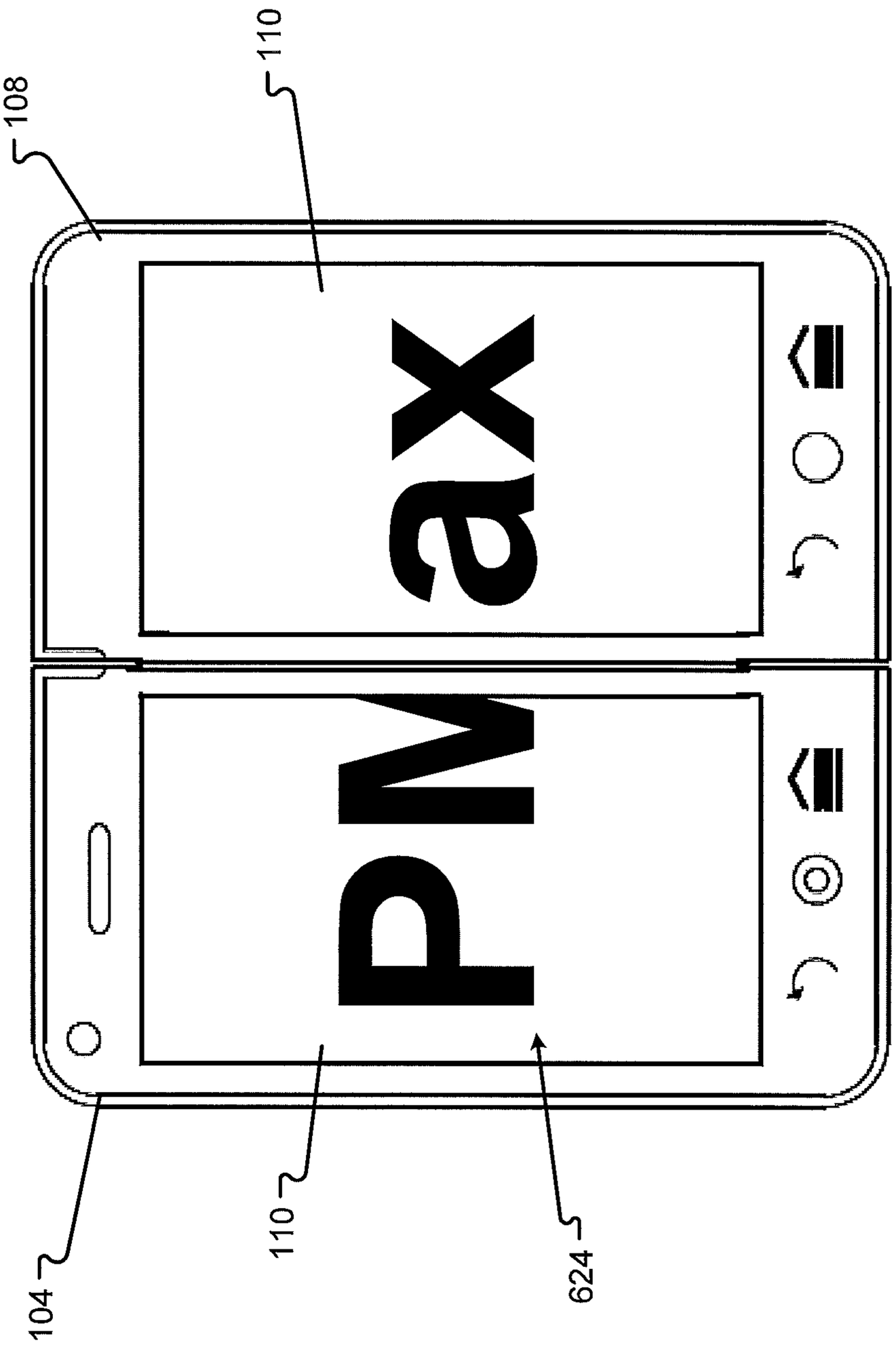

FIG. 6I

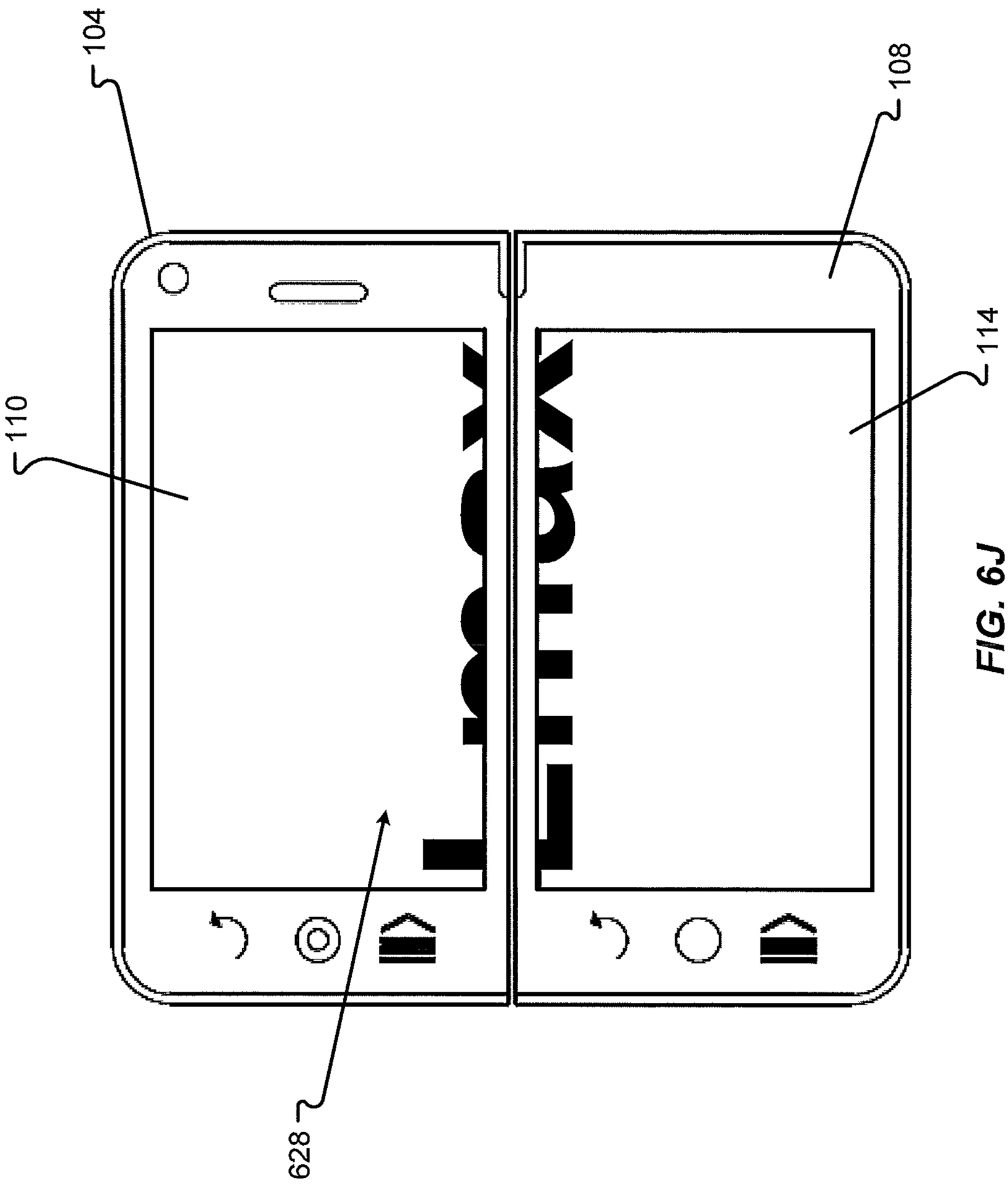

FIG. 6J

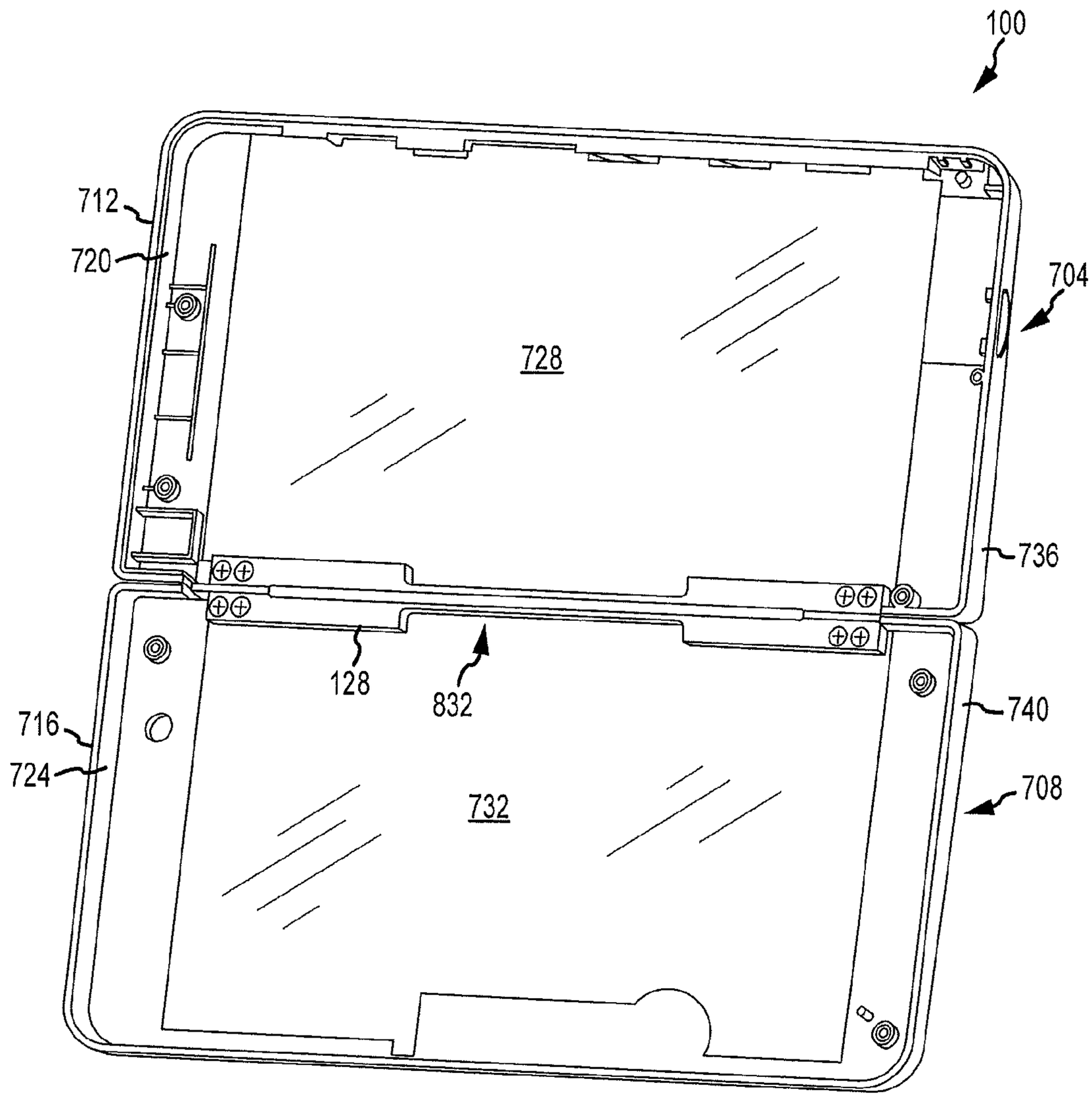

FIG.7

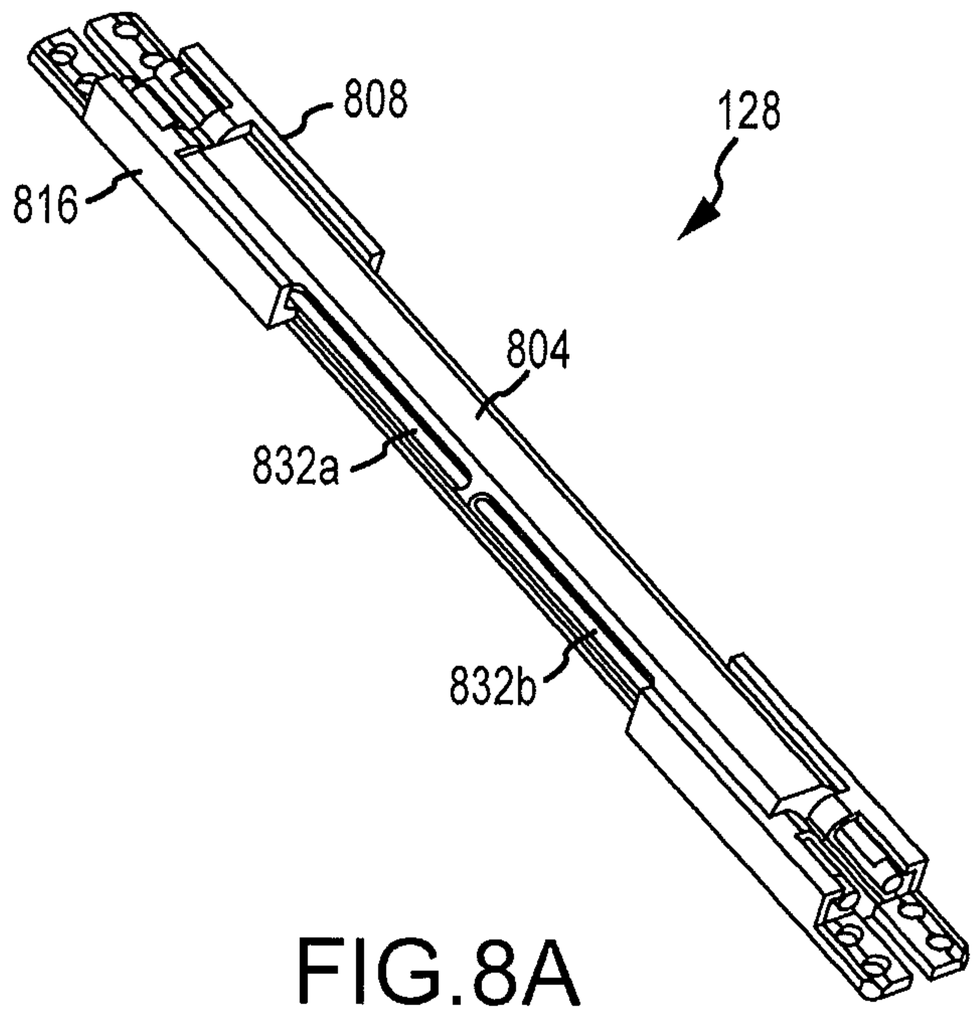
808
128
816
804
832a
832b

FIG.8A

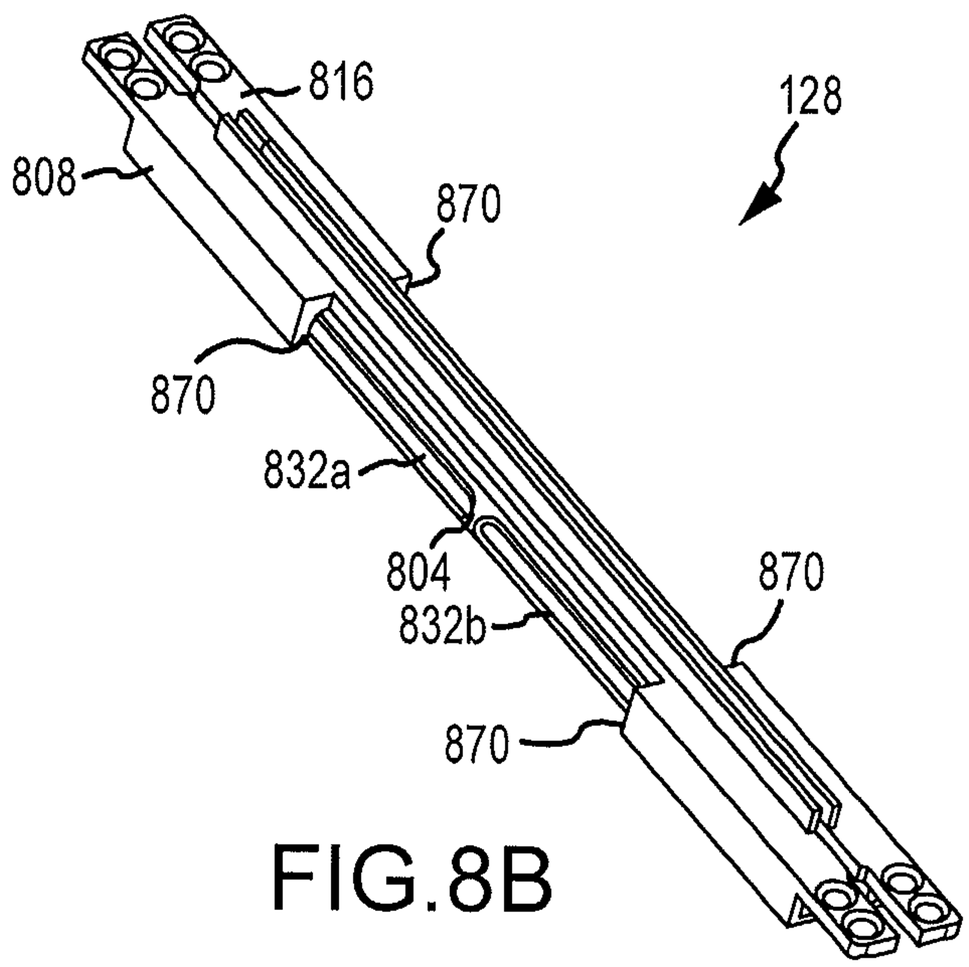
816
128
808
870
870
832a
804
870
832b
870

FIG.8B

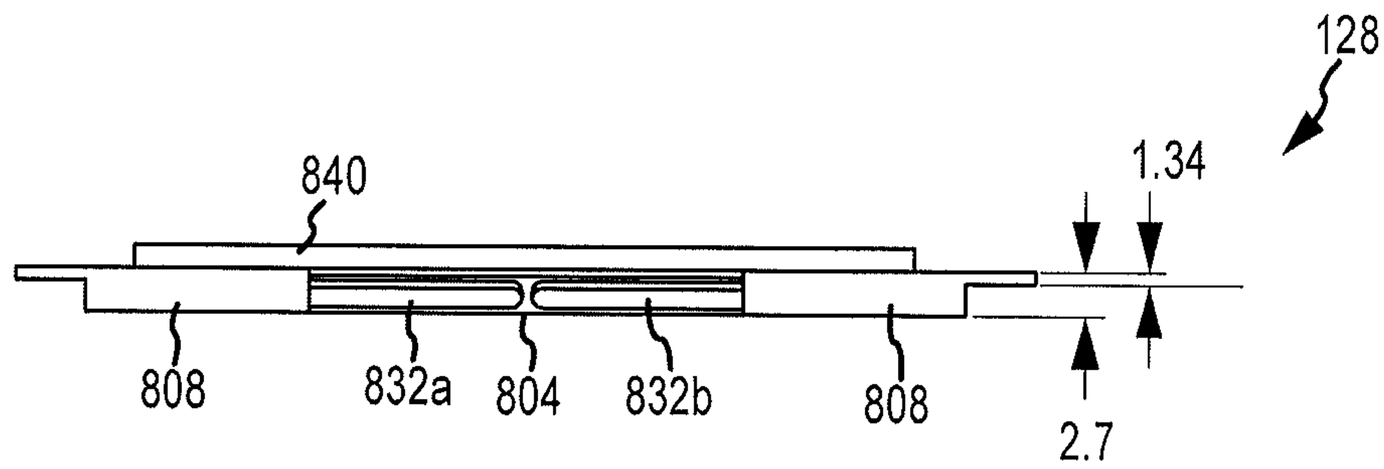

FIG.8C

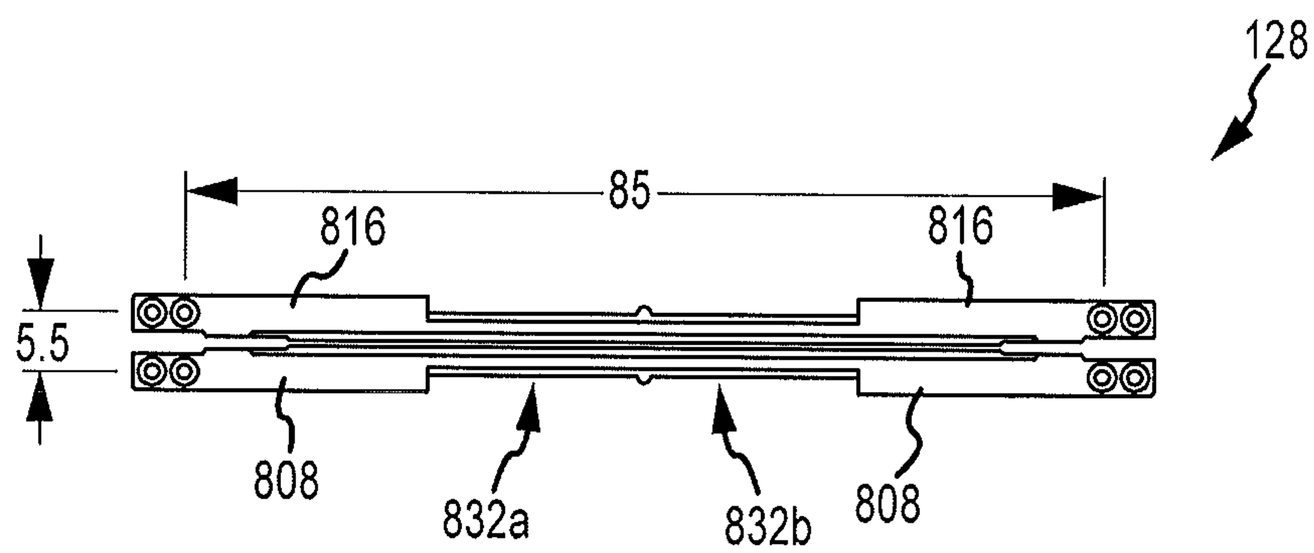

FIG.8D

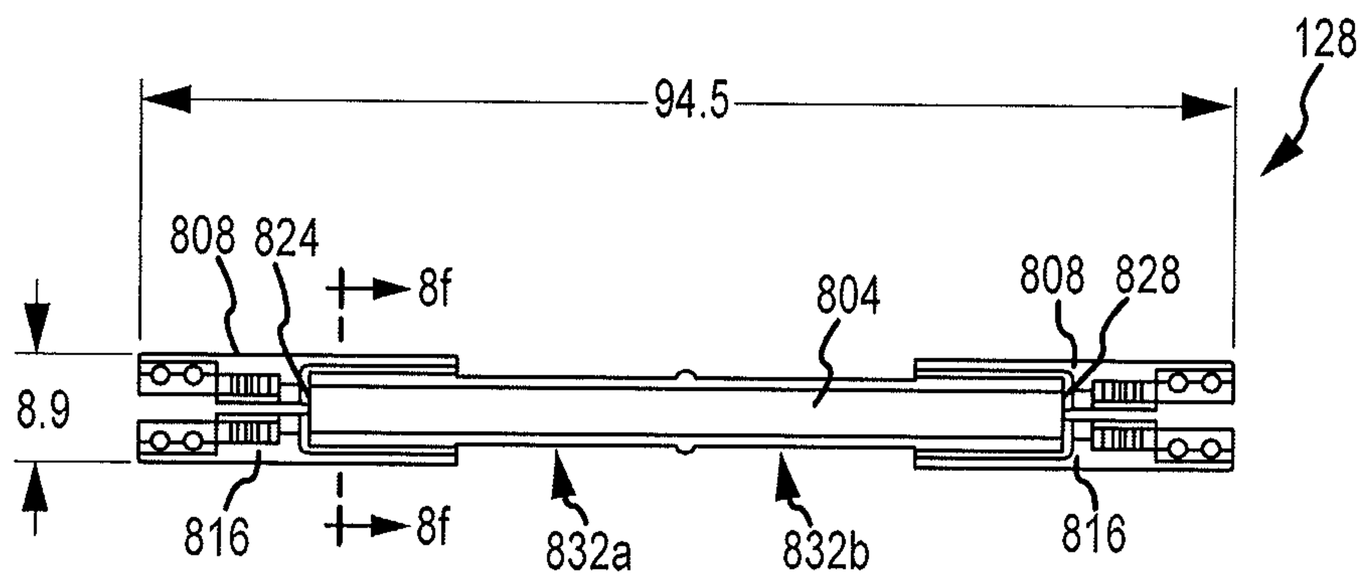

FIG.8E

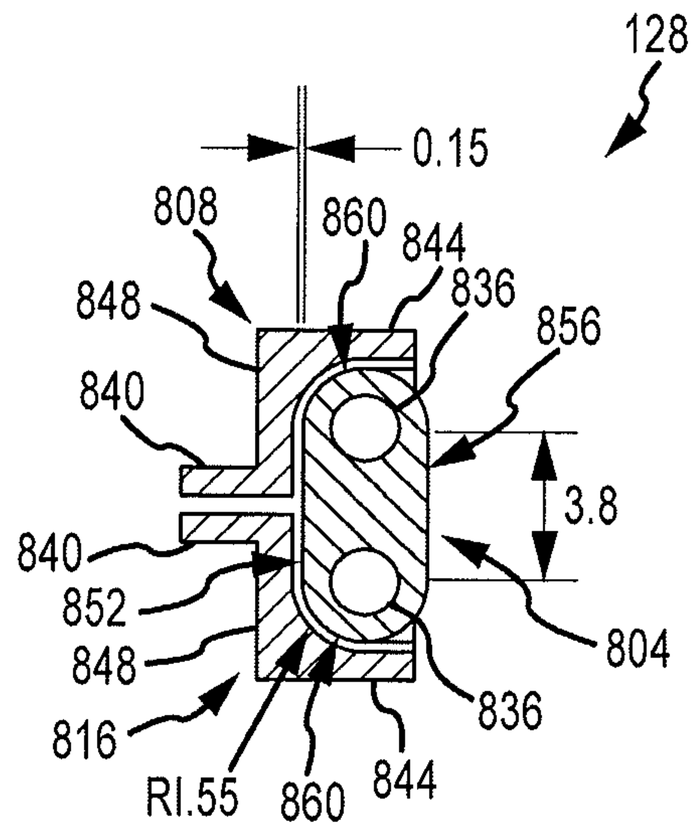
128
0.15
808
860
844
836
848
856
840
3.8
840
852
848
804
816
836
RI.55
860
844

FIG.8F

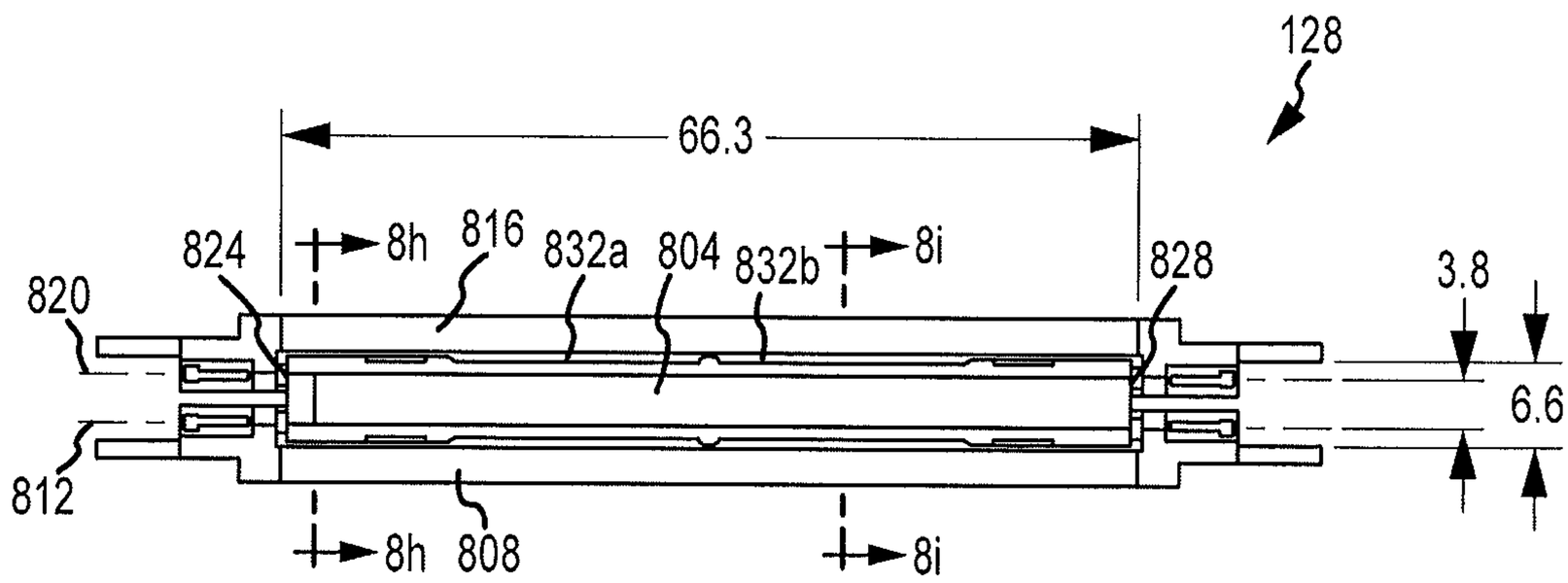
128
66.3
824
8h
816
832a
804
832b
8i
828
3.8
820
6.6
812
8h
808
8i

FIG.8G

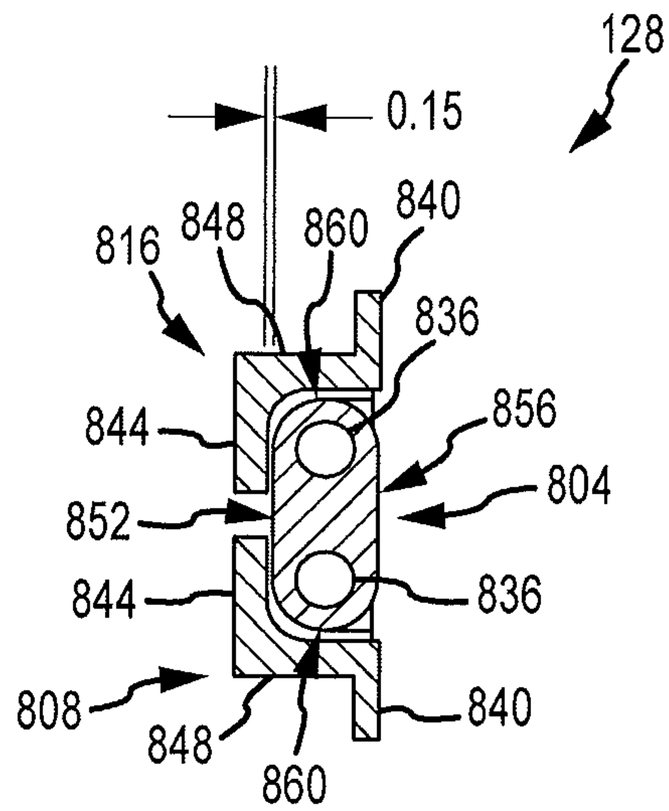
128
0.15
816
848
860
840
836
844
856
852
804
844
836
808
848
860
840

FIG.8H

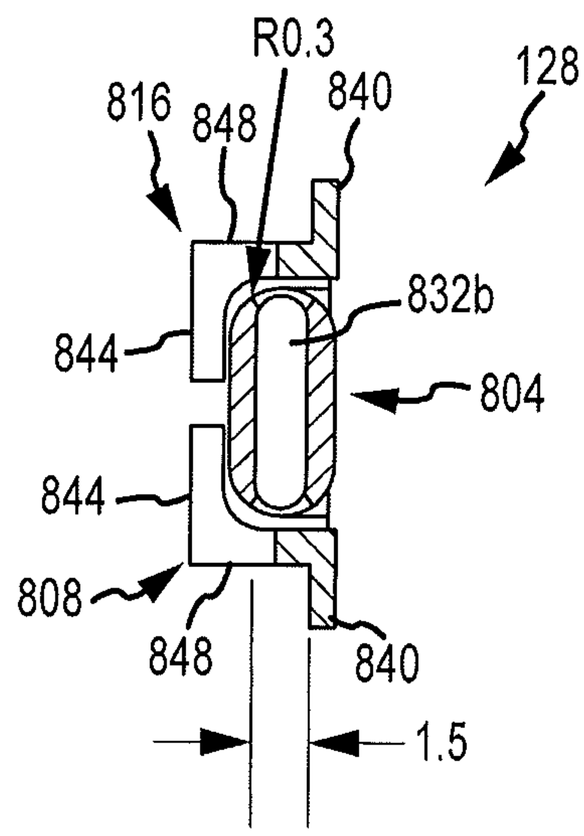
R0.3
128
816
848
840
832b
844
804
844
808
848
840
1.5

FIG.8I

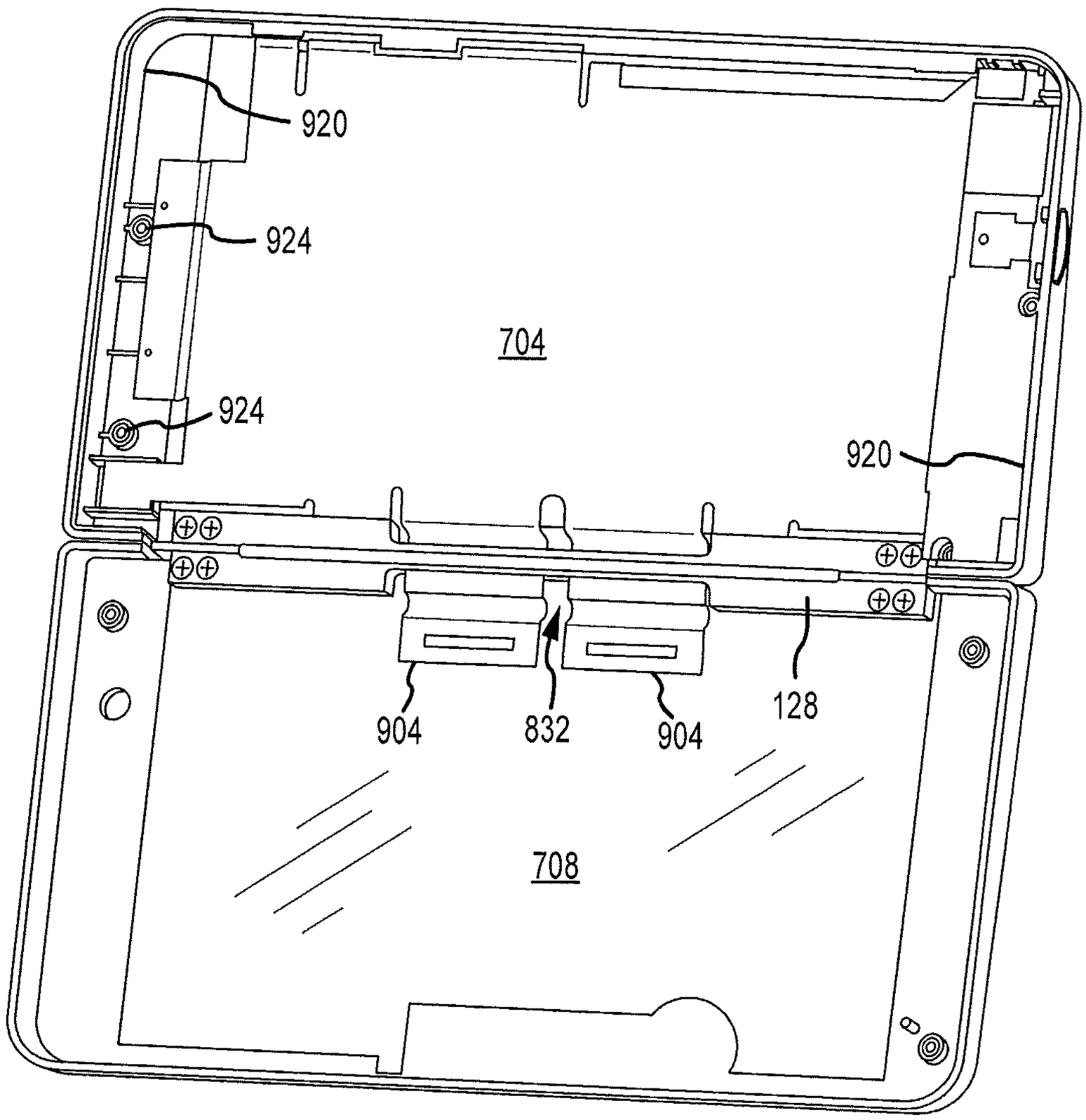

FIG.9

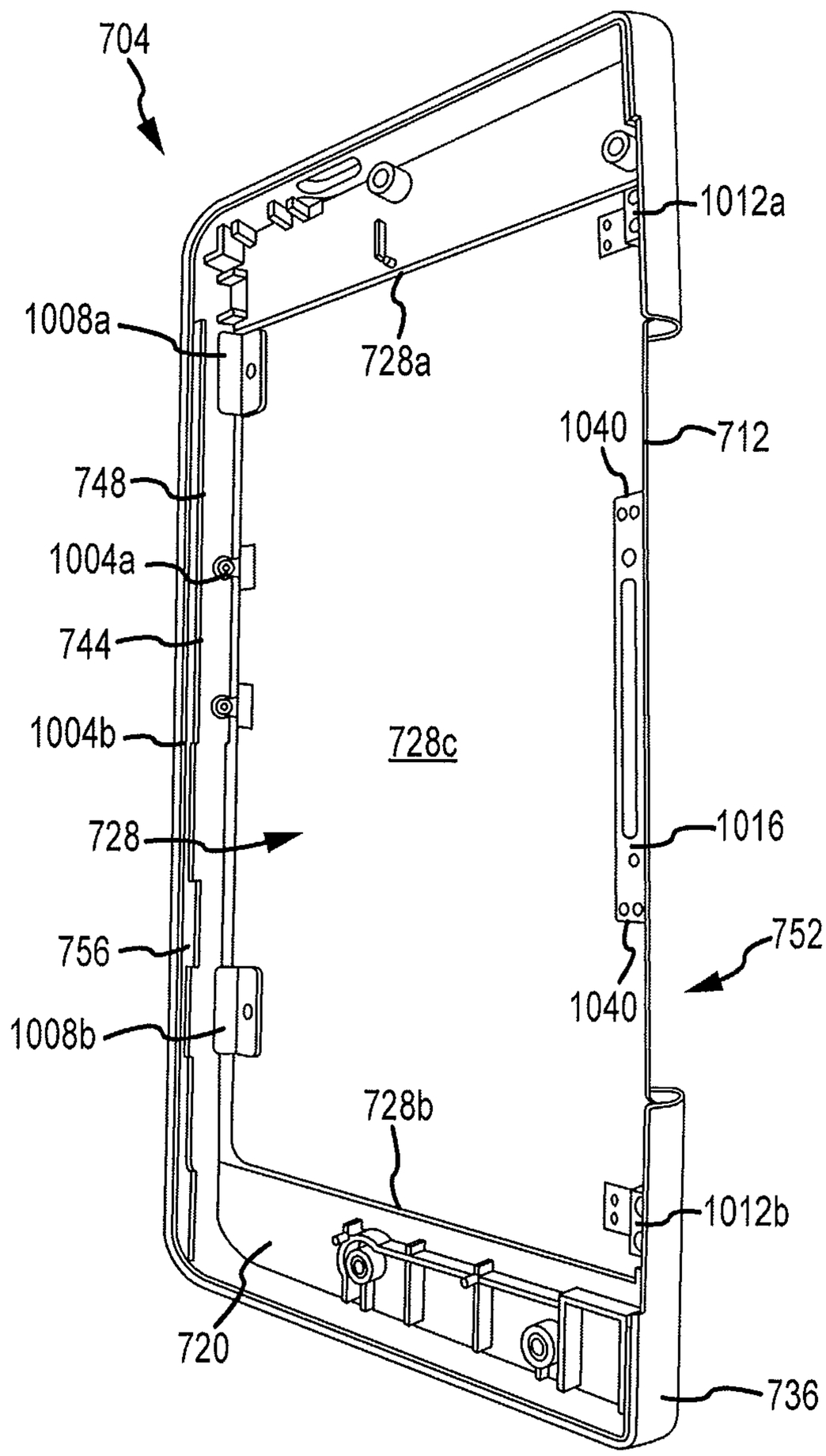
704
1012a
1008a
728a
1040
712
748
1004a
744
1004b
728c
728
1016
752
756
1040
1008b
728b
1012b
720
736

FIG.10

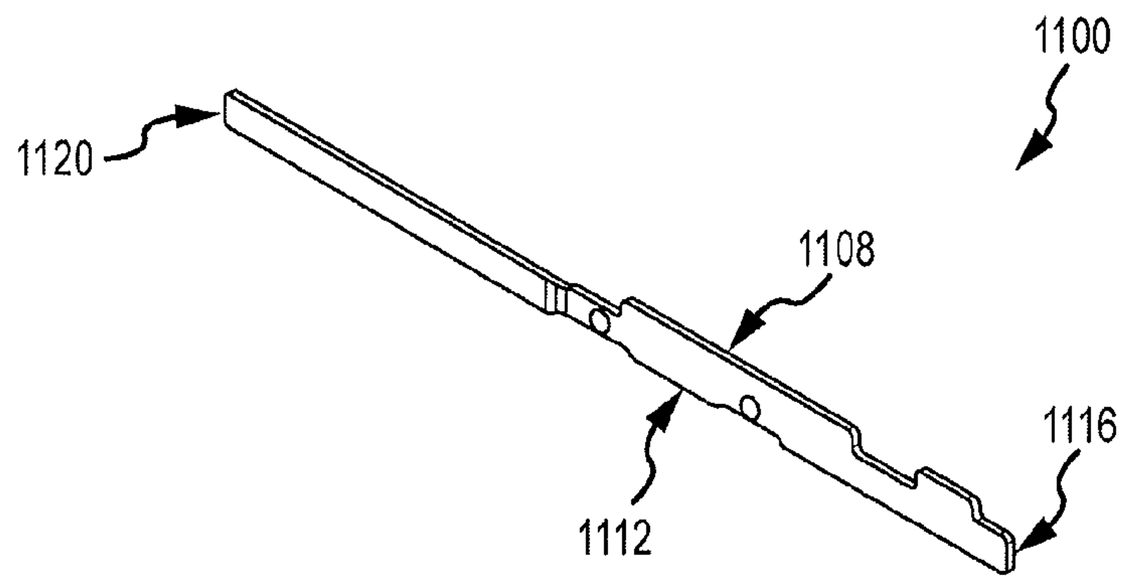

FIG.11A

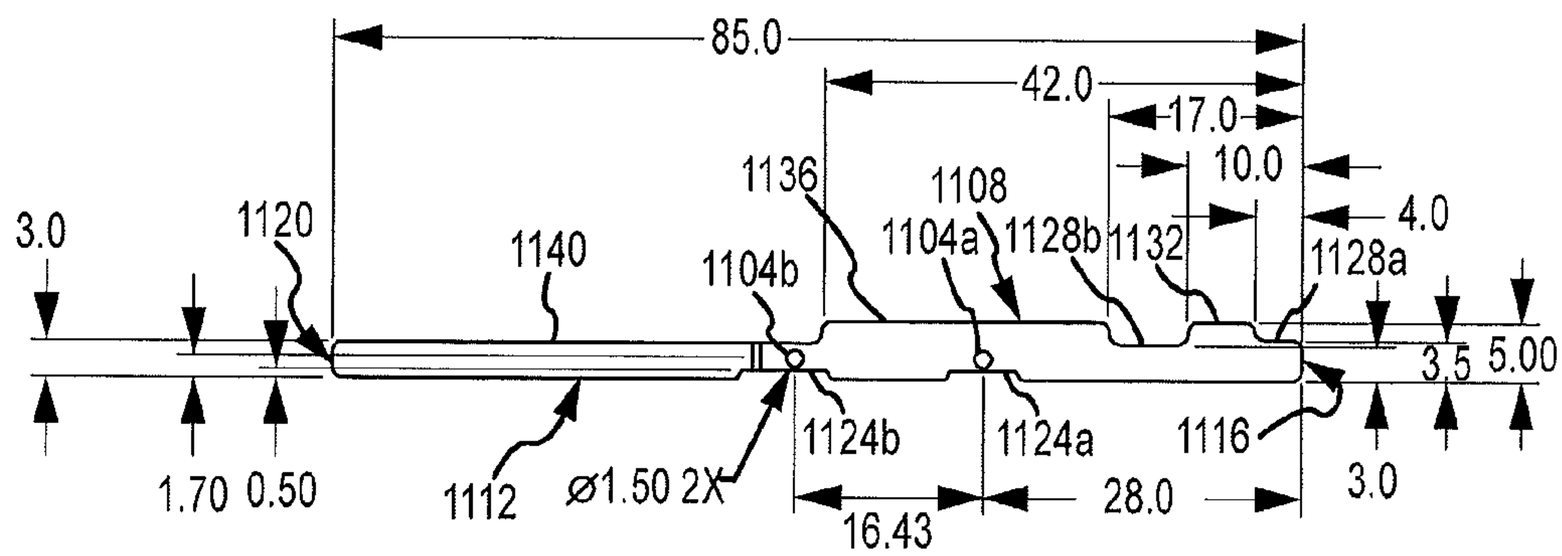

FIG.11B

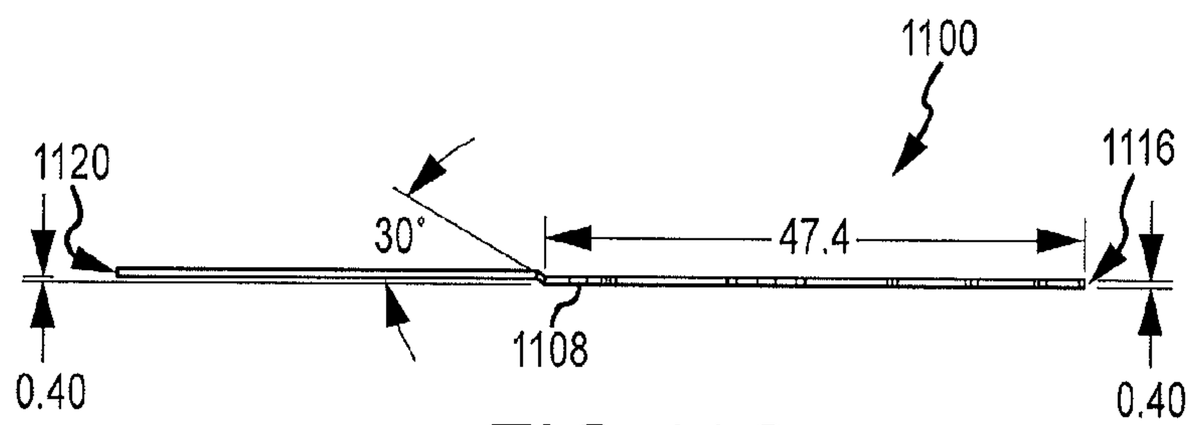

FIG.11C

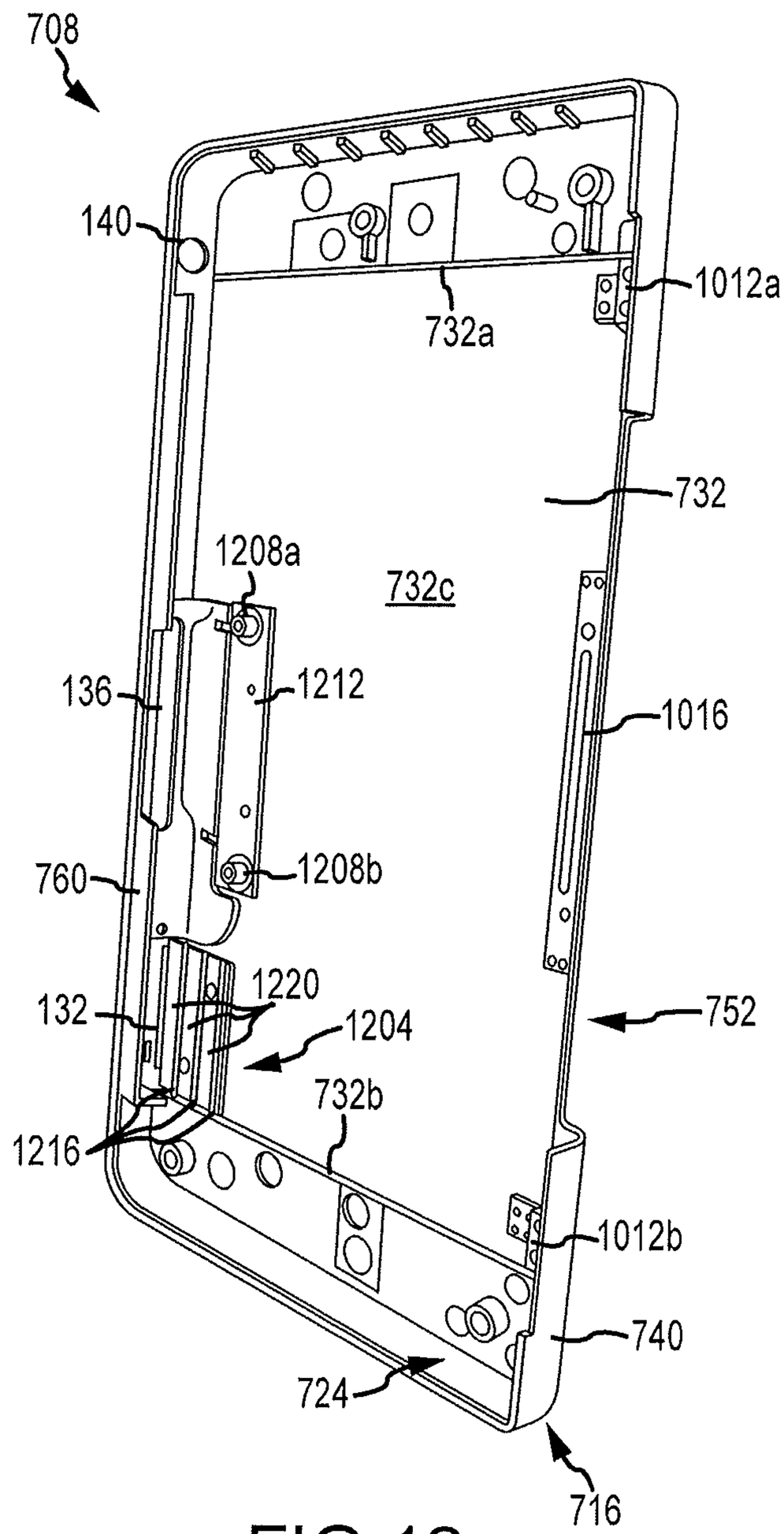
708
140
1012a
732a
732
1208a
732c
136
1212
1016
760
1208b
132
1220
1204
752
732b
1216
1012b
740
724
716

FIG.12

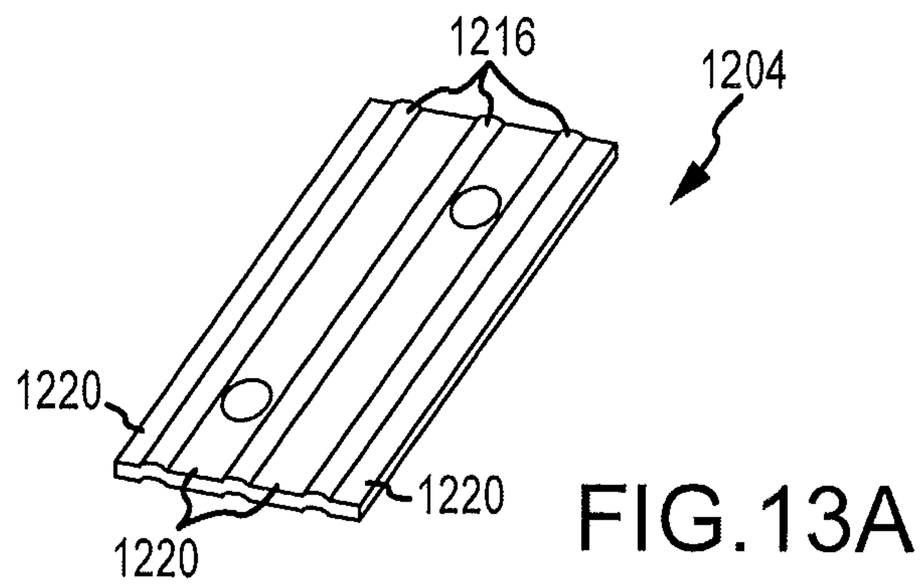

FIG.13A

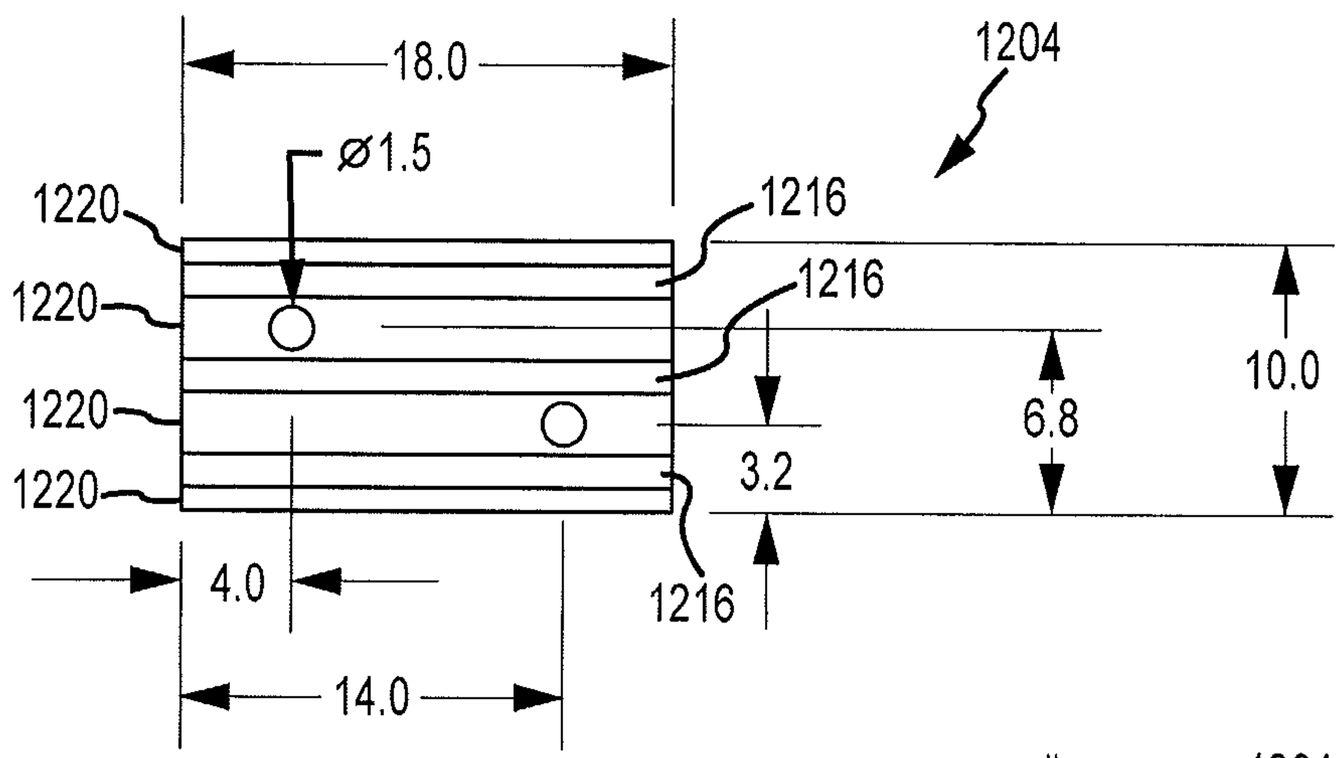

FIG.13B

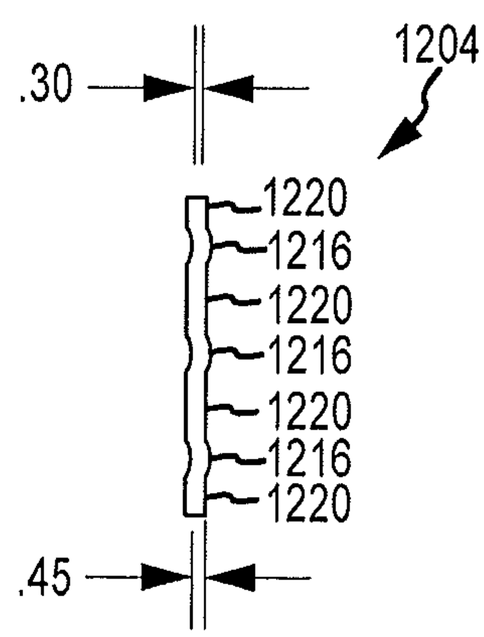

FIG.13C

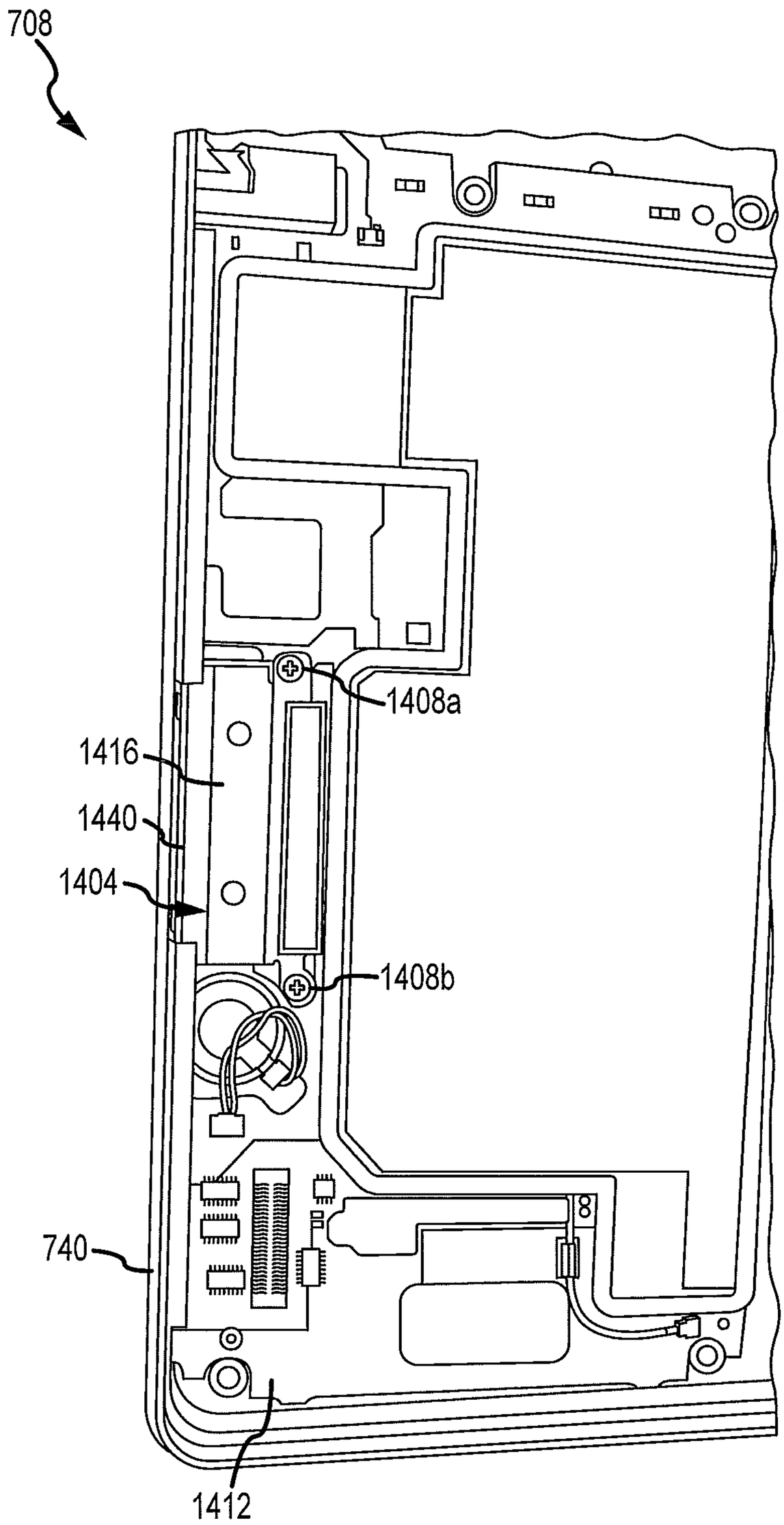

FIG.14

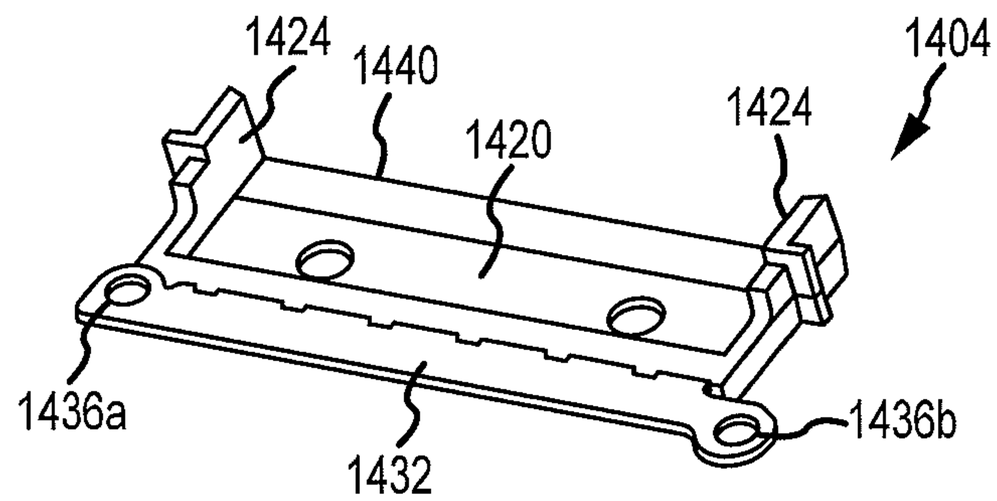

FIG.15A

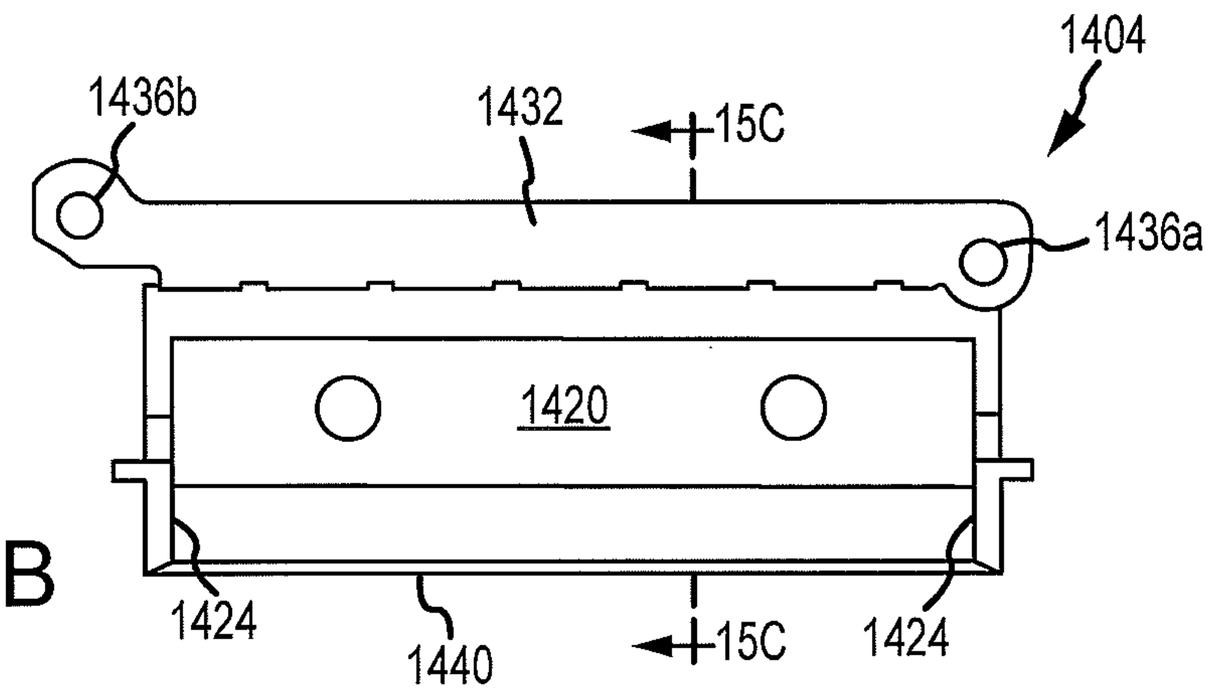

FIG.15B

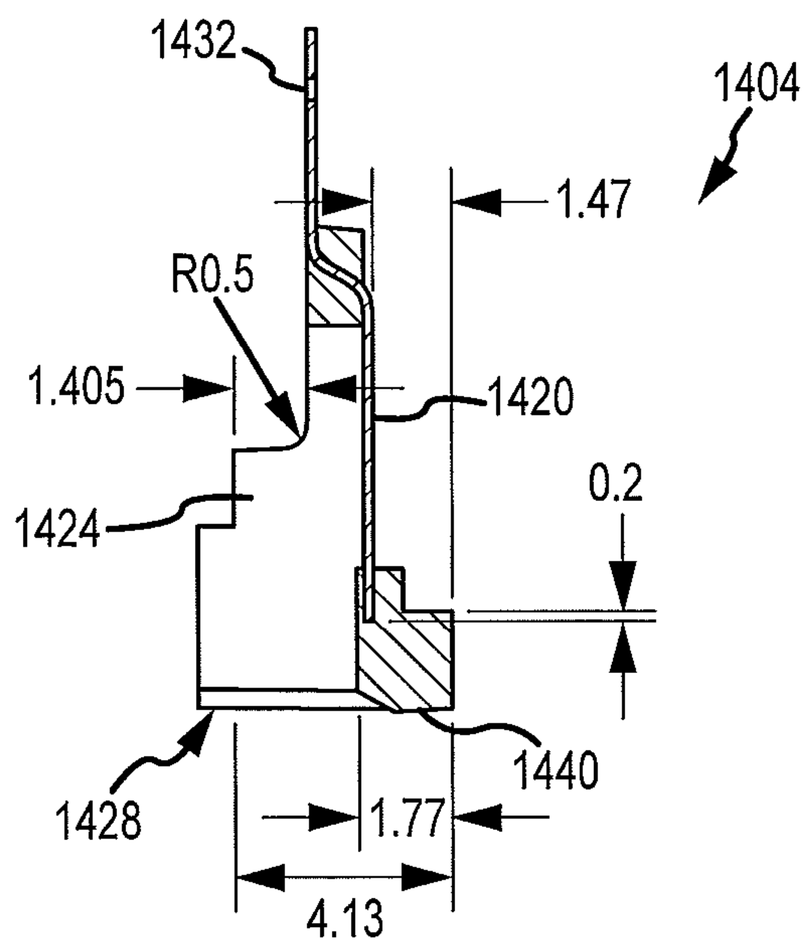

FIG.15C

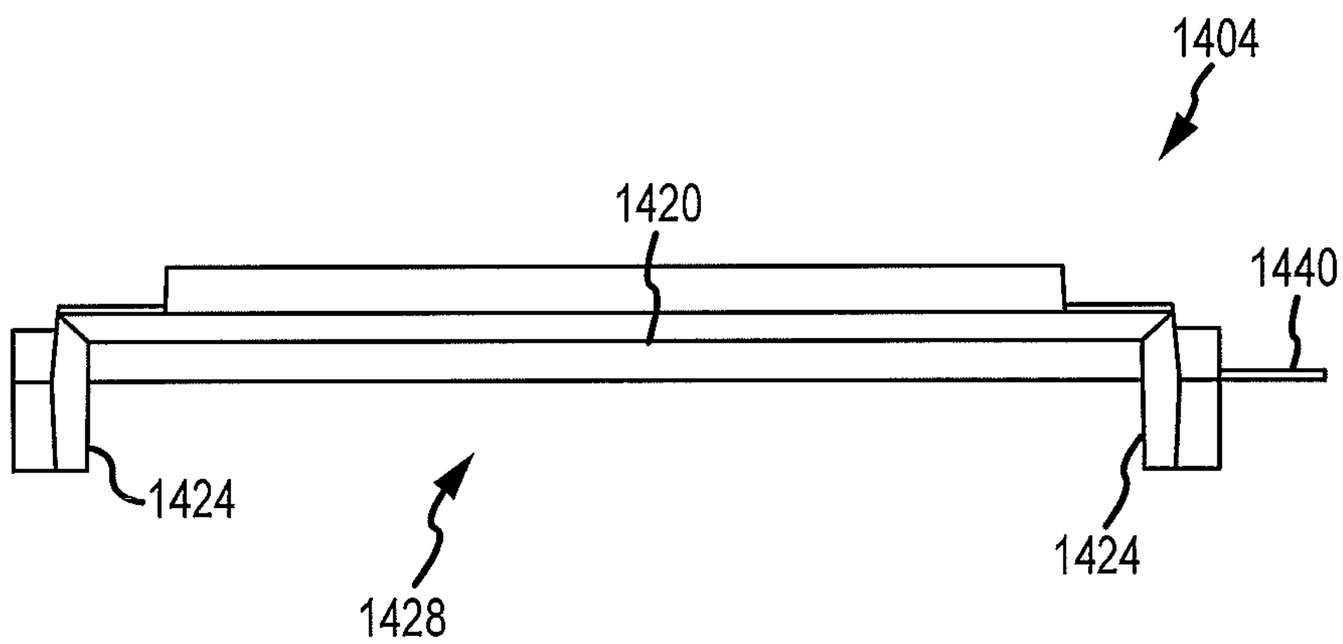

FIG.15D

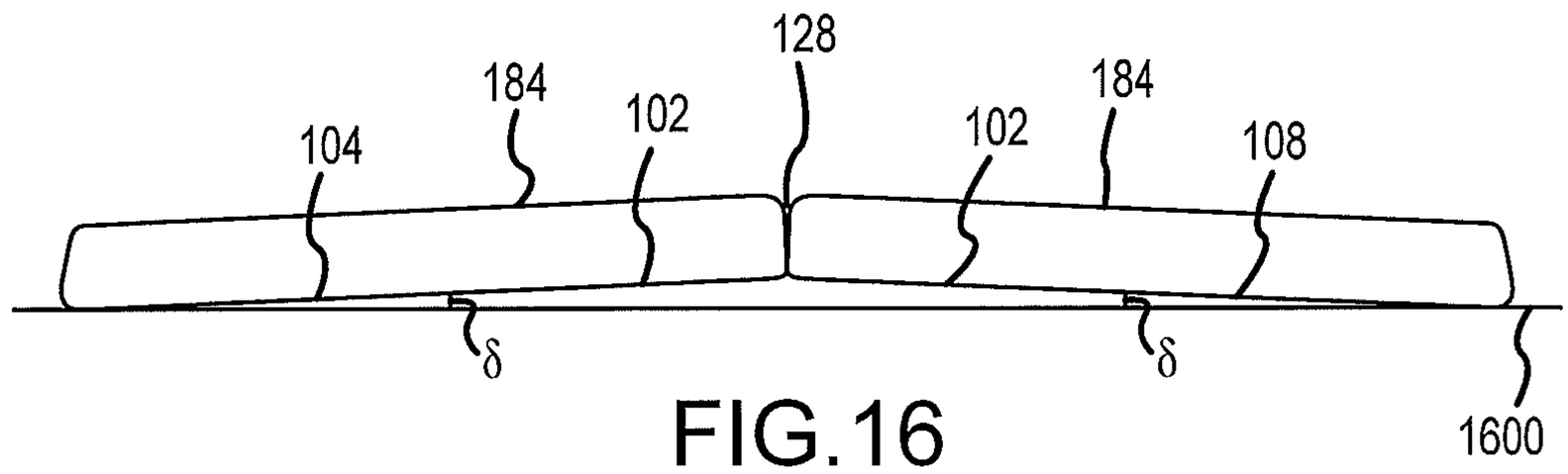

FIG.16

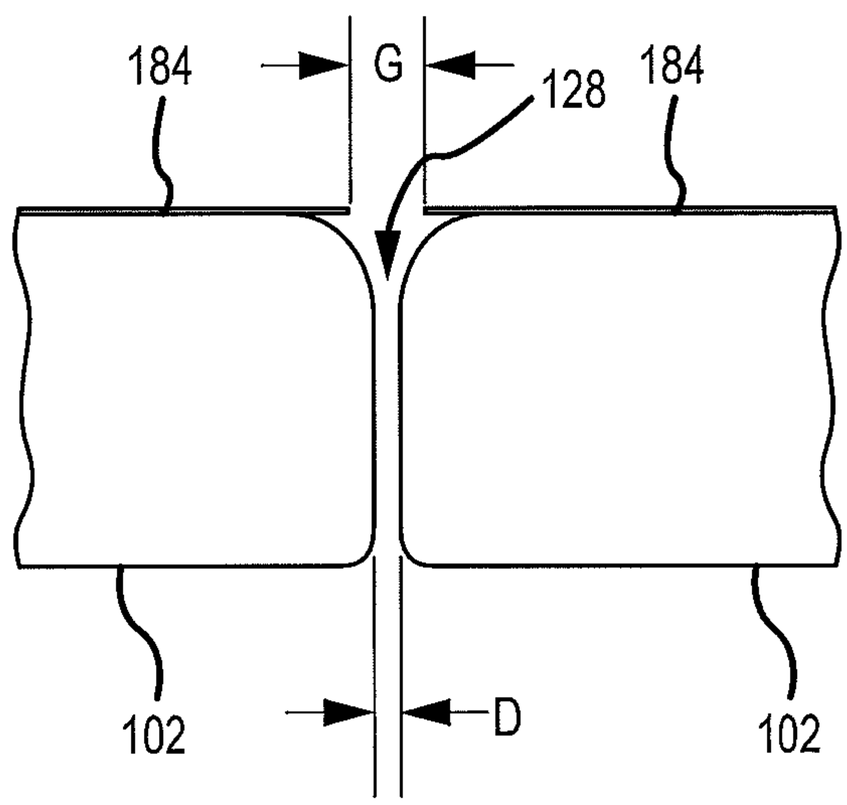

FIG.17

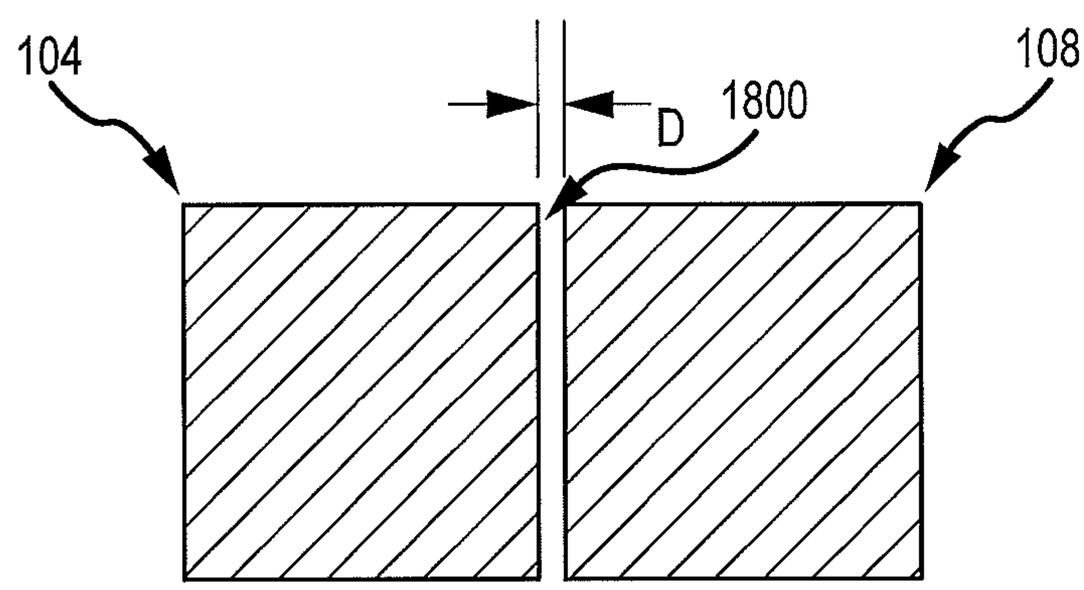

FIG.18

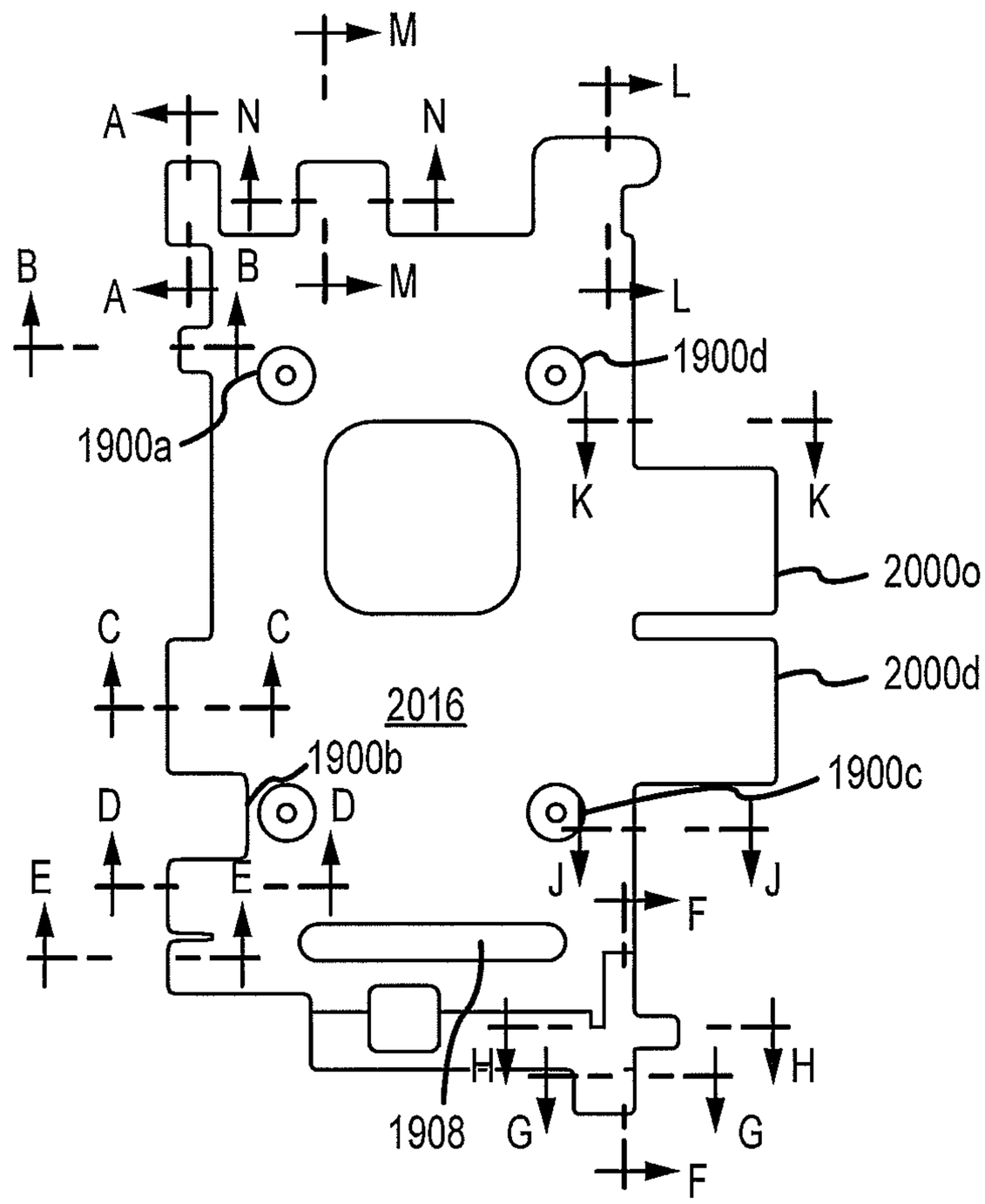
M
A
N
N
L
B
A
B
M
L
1900d
1900a
K
K
2000o
C
C
2016
2000d
1900b
1900c
D
D
E
E
J
J
F
H
H
1908
G
G
F

FIG.19

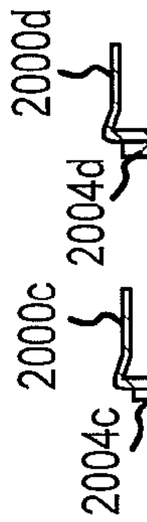

FIG.20A

FIG.20B

FIG.20C

FIG.20D

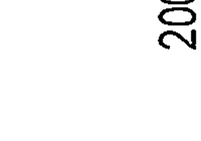

FIG.20E

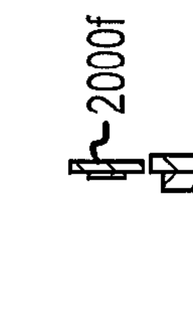

FIG.20F

FIG.20G

FIG.20H

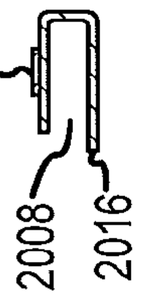

FIG.20J

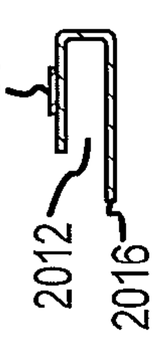

FIG.20K

FIG.20L

FIG.20M

FIG.20N

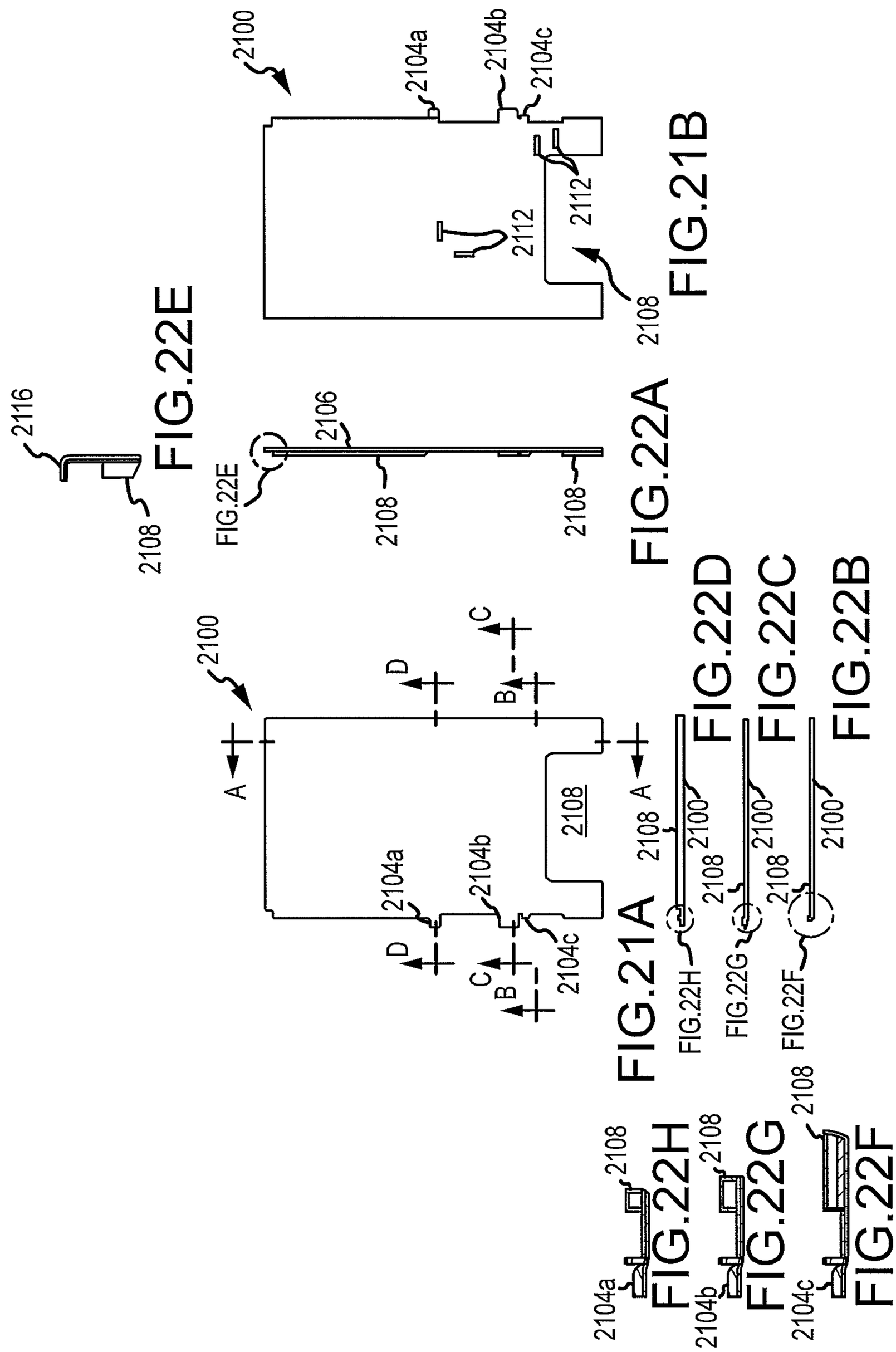
2100
2104a
2104b
2104c
2112
2112
2108
FIG.21B
2116
2108
FIG.22E
FIG.22E
2106
2108
2108
FIG.22A
2100
A
B
C
D
2104a
2104b
2104c
2108
FIG.21A
2108
2100
FIG.22D
2108
2100
FIG.22C
2108
2100
FIG.22B
FIG.22H
2108
2104a
FIG.22G
2108
2104b
FIG.22F
2108
2104c

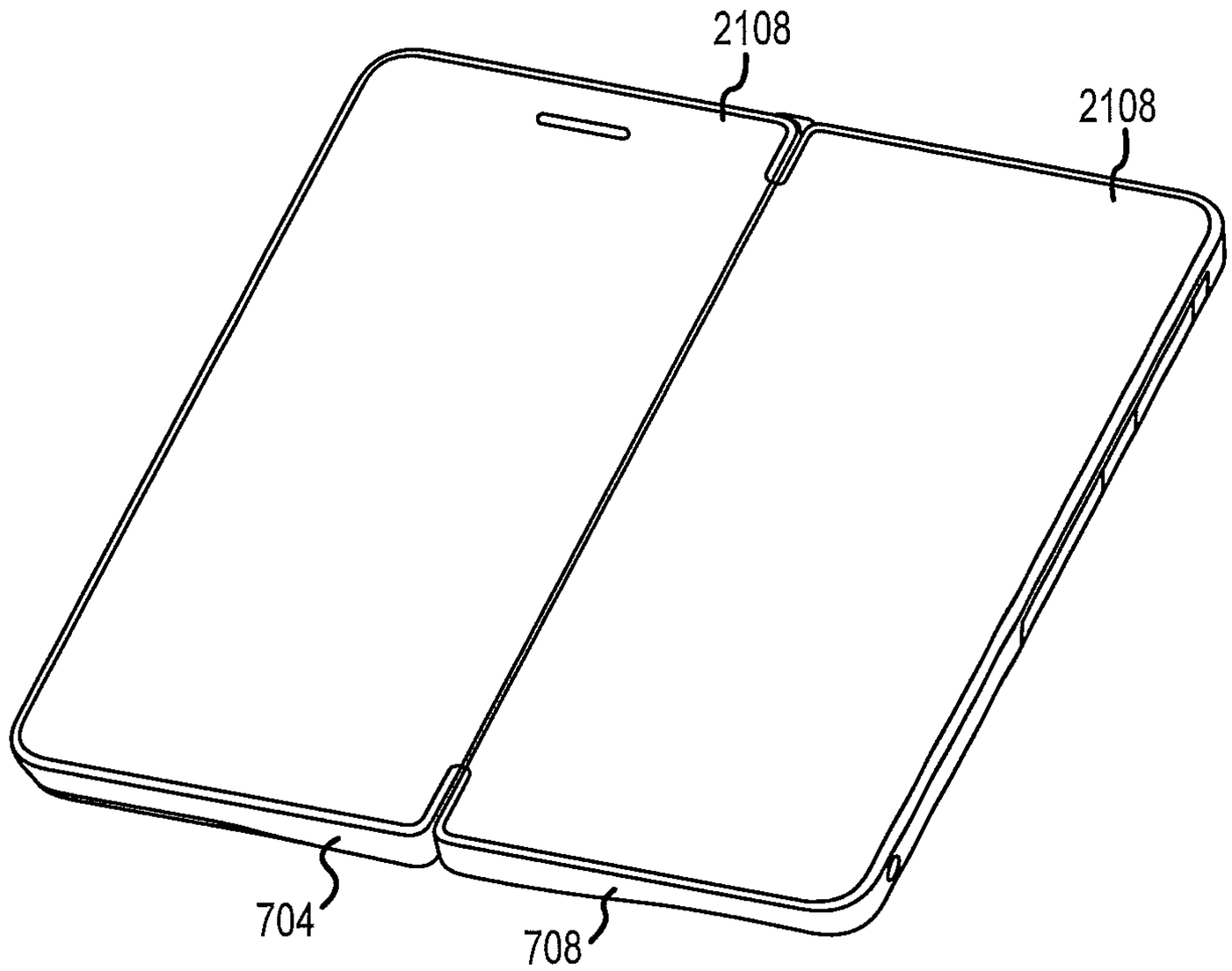

FIG.23

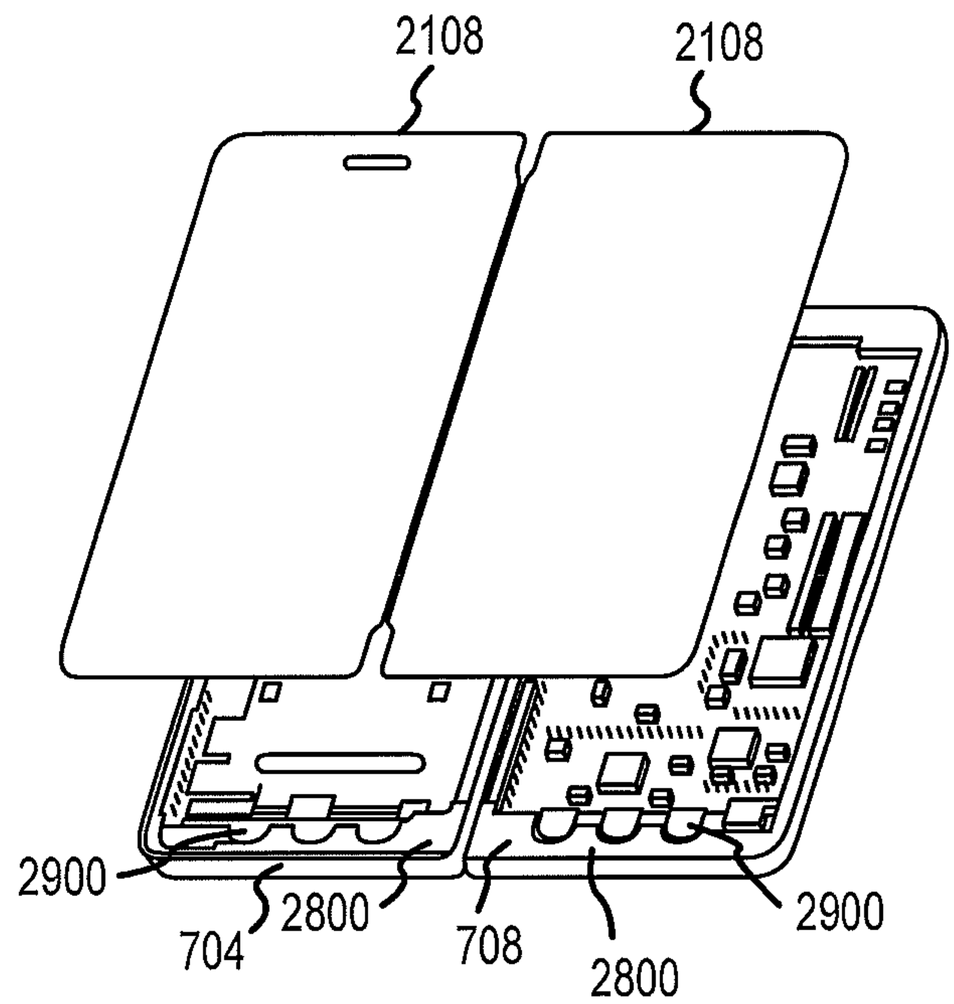

FIG.24

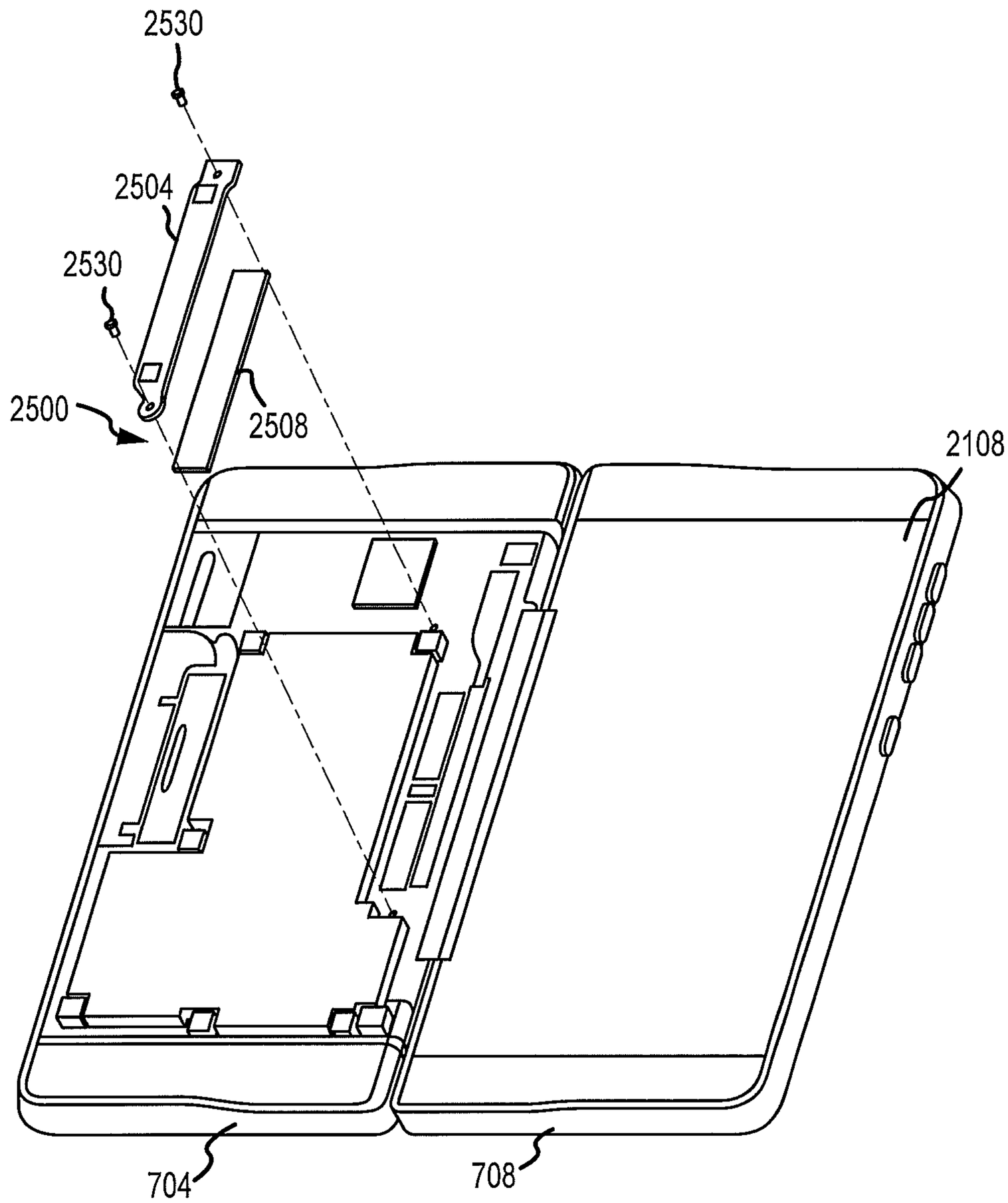

FIG.25

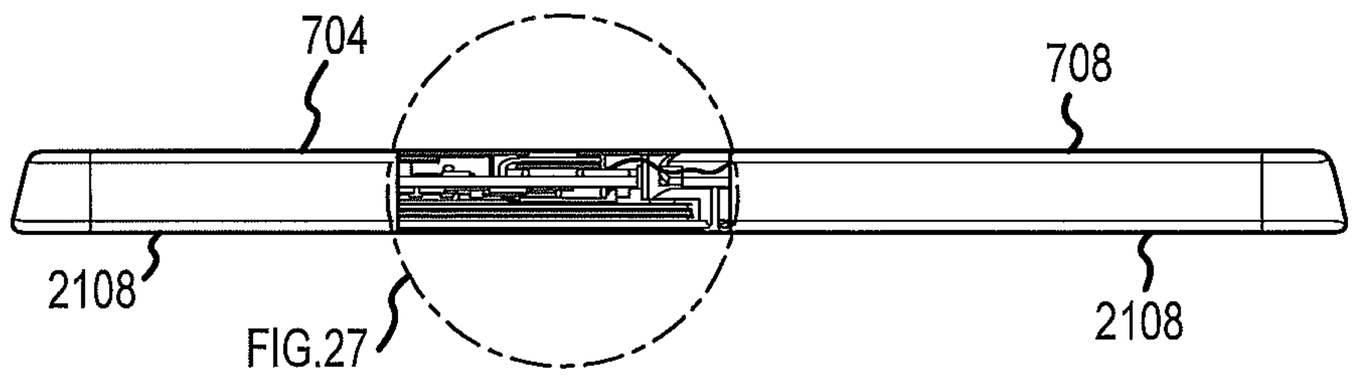
704
708
2108
FIG.27
2108

FIG.26

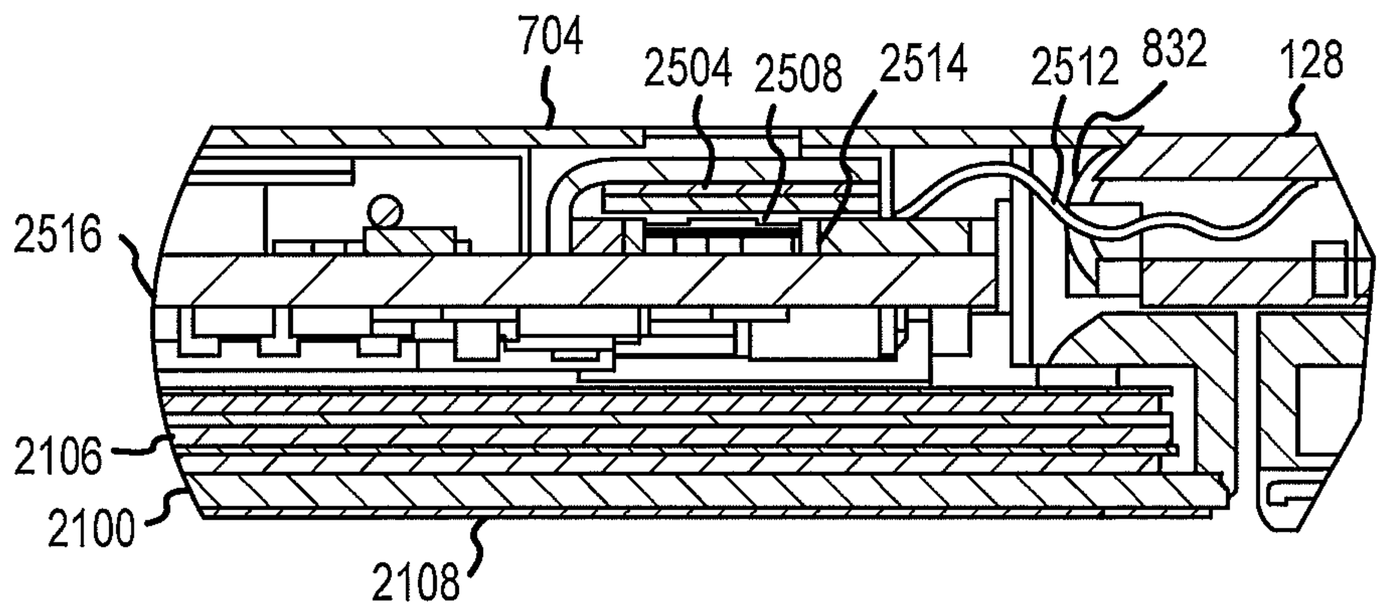
704
2504
2508
2514
2512
832
128
2516
2106
2100
2108

FIG.27

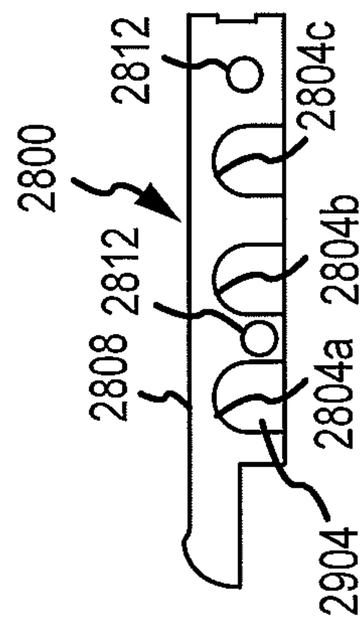

FIG.28A

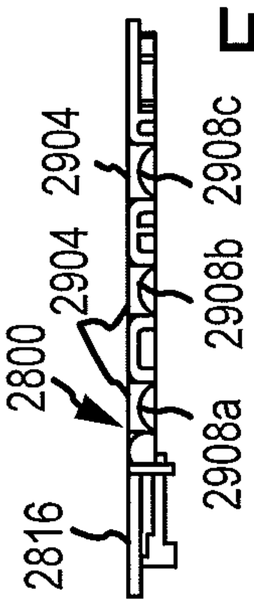

FIG.28B

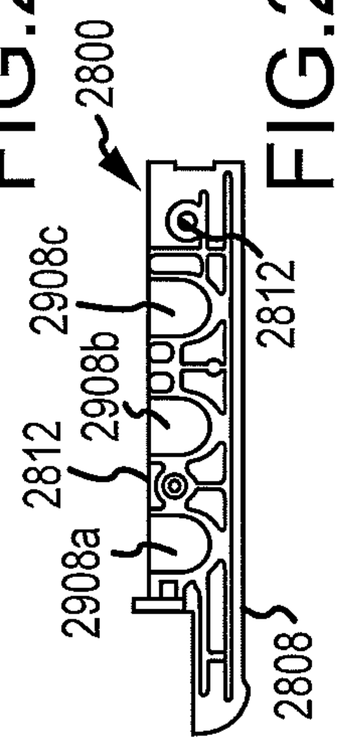

FIG.28C

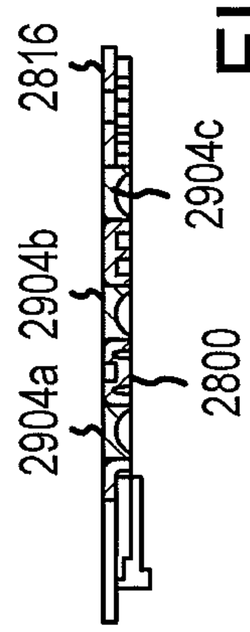

FIG.28D

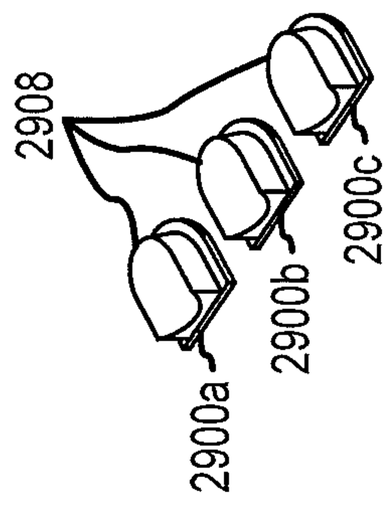

FIG.29A

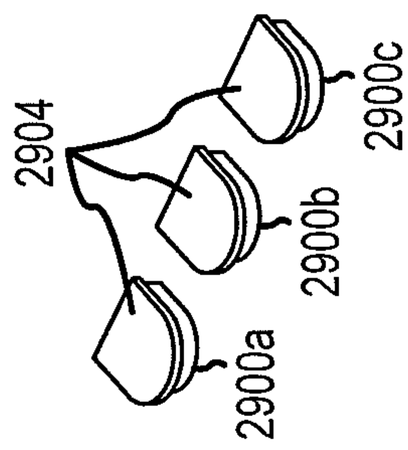

FIG.29B

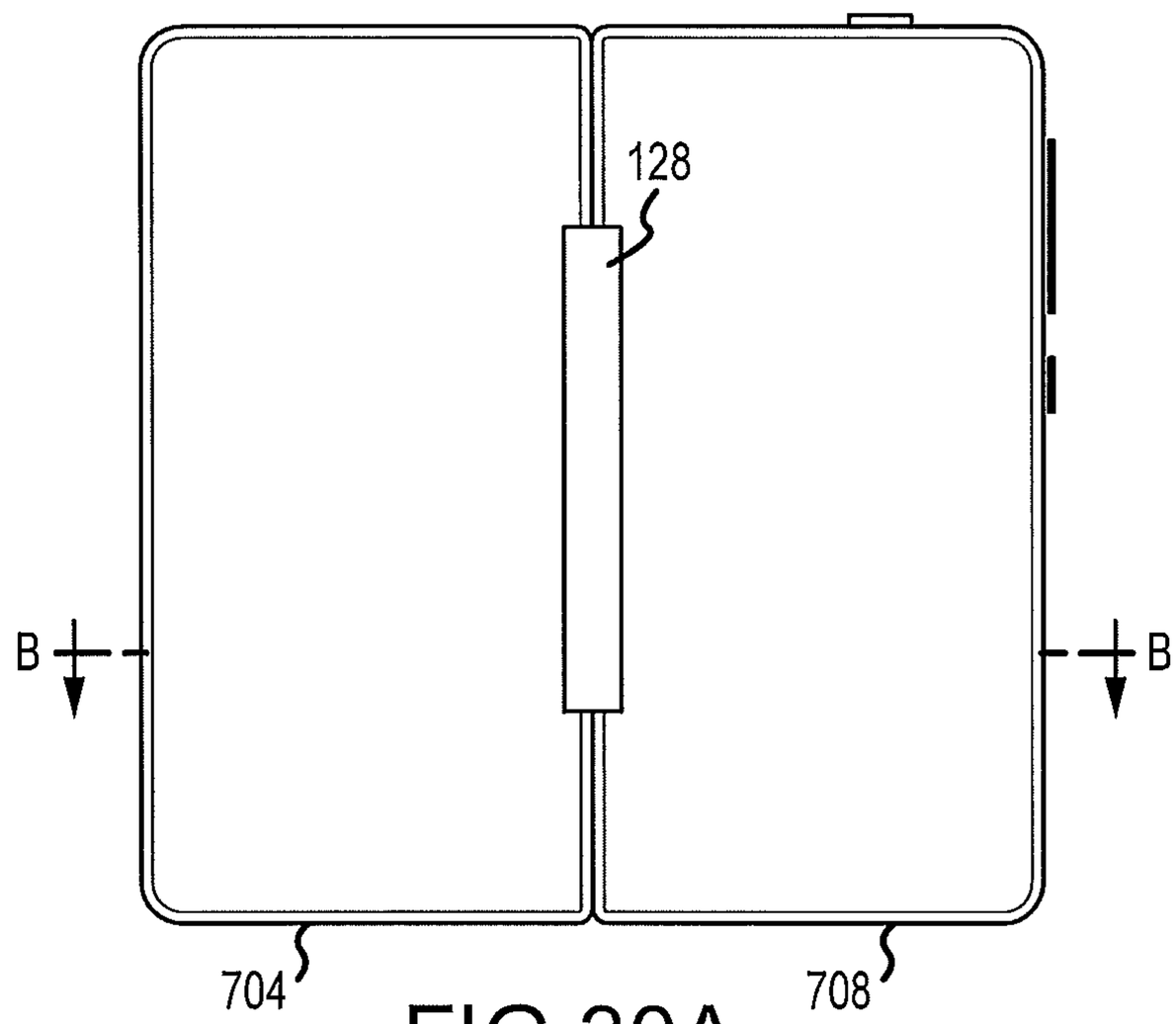

FIG.30A

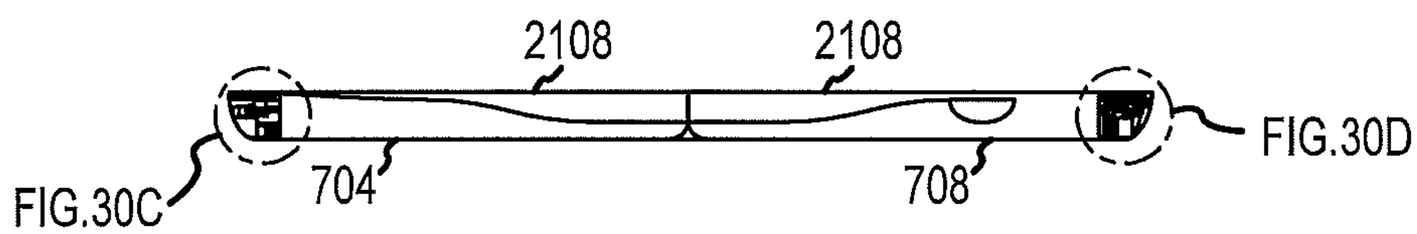

FIG.30B

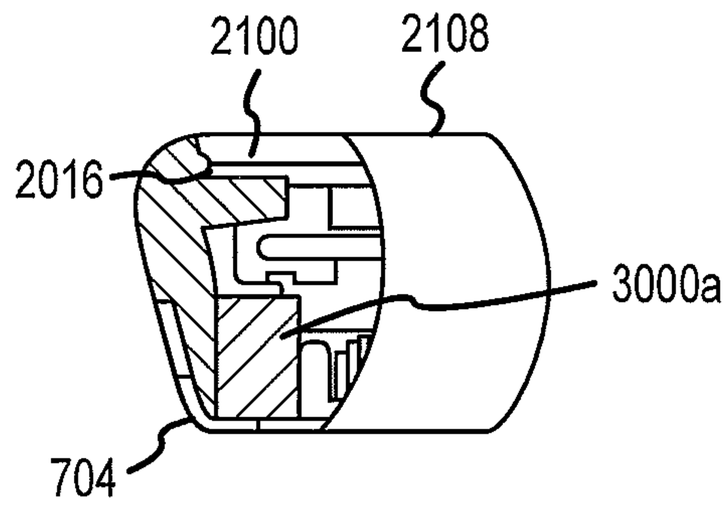

FIG.30C

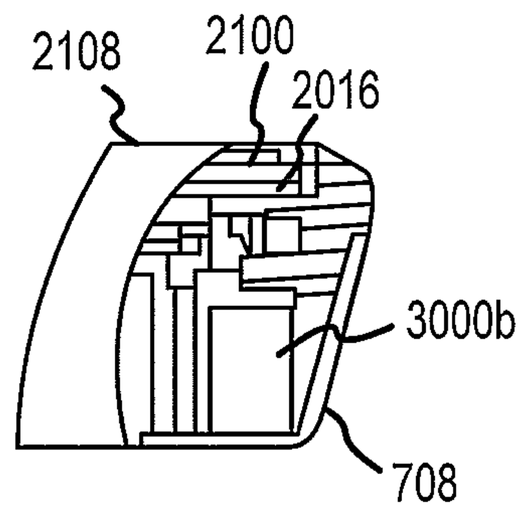

FIG.30D

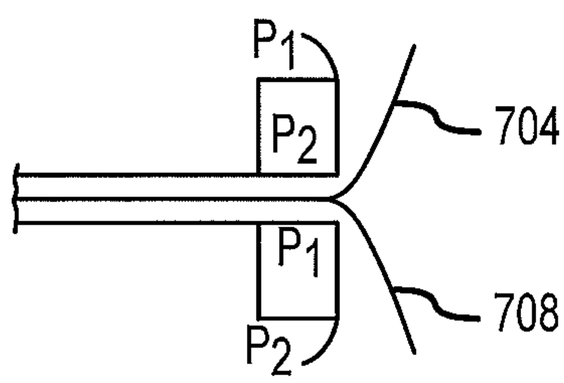

FIG.30E

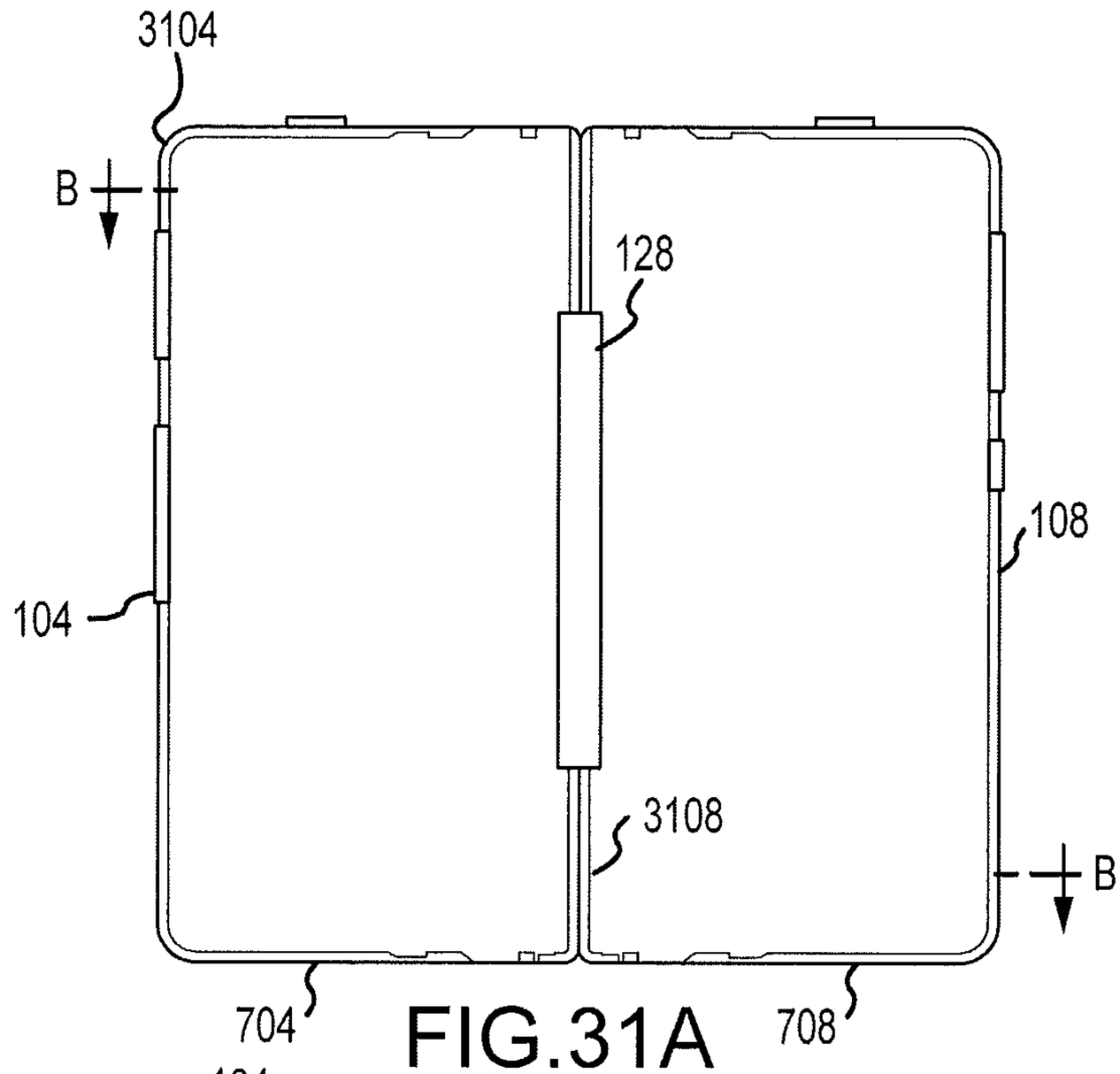

FIG.31A

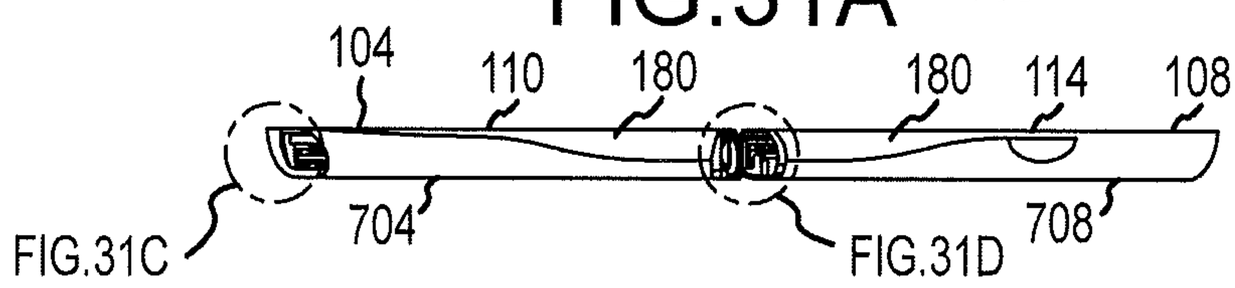

FIG.31B

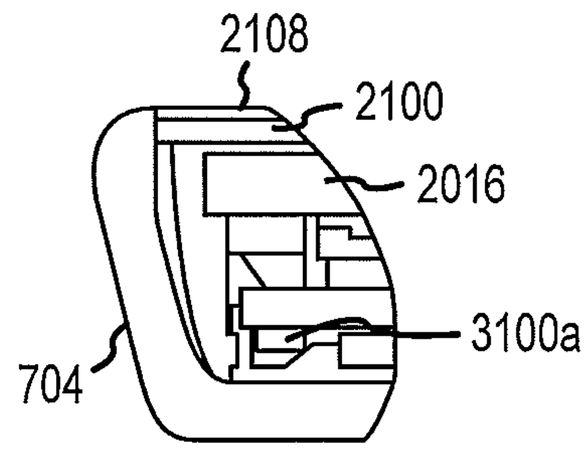

FIG.31C

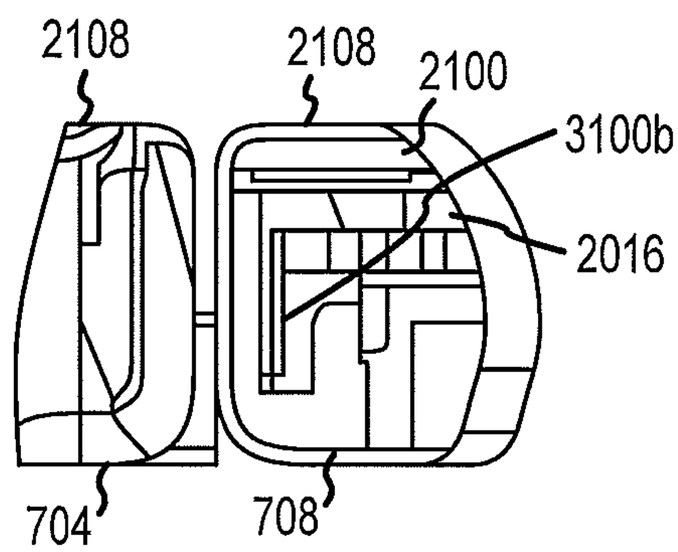

FIG.31D

METAL HOUSING WITH MOULDED PLASTIC

CROSS REFERENCE TO RELATED APPLICATION

The present application claims the benefit of and priority, under 35 U.S.C. §119(e), to U.S. Provisional Application Ser. No. 61/539,884, filed Sep. 27, 2011, entitled "MOBILE DEVICE," which is incorporated herein by this reference in its entirety for all that it teaches and for all purposes.

BACKGROUND

A substantial number of handheld computing devices, such as cellular phones, tablets, and E-Readers, make use of a touch screen display not only to deliver display information to the user but also to receive inputs from user interface commands. While touch screen displays may increase the configurability of the handheld device and provide a wide variety of user interface options, this flexibility typically comes at a price. The dual use of the touch screen to provide content and receive user commands, while flexible for the user, may obfuscate the display and cause visual clutter, thereby leading to user frustration and loss of productivity.

The small form factor of handheld computing devices requires a careful balancing between the displayed graphics and the area provided for receiving inputs. On the one hand, the small display constrains the display space, which may increase the difficulty of interpreting actions or results. On the other hand, a virtual keypad or other user interface scheme is superimposed on or positioned adjacent to an executing application, requiring the application to be squeezed into an even smaller portion of the display.

This balancing act is particularly difficult for single display touch screen devices. Single display touch screen devices are crippled by their limited screen space. When users are entering information into the device, through the single display, the ability to interpret information in the display can be severely hampered, particularly when a complex interaction between display and interface is required.

SUMMARY

There is a need for a dual multi-display handheld computing device that provides for enhanced power and/or versatility compared to conventional single display handheld computing devices. These and other needs are addressed by the various aspects, embodiments, and/or configurations of the present disclosure. Also, while the disclosure is presented in terms of exemplary embodiments, it should be appreciated that individual aspects of the disclosure can be separately claimed. A housing for a handheld computing device can include:

a metallic outer shell having a substantially flat base and a sidewall connected to a periphery of the base, the metallic outer shell having an inner surface and an outer surface; and

a polymeric portion nanomolded on the inner surface of the metallic outer shell in a predetermined location to provide rigidity to the metallic outer shell.

A handheld computing device can include:

a first screen having a first display; and

a second screen having a second display, the second screen being rotatably connected to the first screen.

One or more of the first screen or the second screen includes:

a metallic outer shell having a substantially flat base and a sidewall connected to a periphery of the base, the metallic outer shell having an inner surface and an outer surface; and

a polymeric portion nanomolded on the inner surface of the metallic outer shell in a predetermined location to provide rigidity to the metallic outer shell.

A method of assembling a handheld computing device can include:

forming a metallic material into a geometrical shape having a substantially flat base and a sidewall connected to a periphery of the base, the metallic material having an inner surface and an outer surface, the metallic material having a thickness of less than about 0.3 millimeters;

chemically etching a predetermined location on the inner surface of the metallic material; and

overmolding a polymeric material on the chemically etched location to provide rigidity to the predetermined location.

The predetermined location of the metallic outer shell can include a portion of the base.

The base includes a top portion, a bottom portion, and a middle portion interposed between the top and bottom portions, and the predetermined location includes the top and bottom portions of the base.

The predetermined location can further include a portion of the sidewall.

The polymeric portion nanomolded on the sidewall can include a shelf extending inward from the sidewall of the metallic outer shell.

The polymeric portion can include polyphenol plastic.

The base can be substantially rectangular, and the sidewall can have four sides.

The sidewall can have an elongate opening formed in one side, and the elongate opening can be configured to accommodate a hinge.

The printed circuit board, displays, and hinge can provide additional stiffness to the housing, which thereby can have sufficient structural rigidity to inhibit component failure.

The present disclosure can provide a number of advantages depending on the particular aspect, embodiment, and/or configuration. For example, currently, the consumer electronics industry is dominated by single-screen devices. Unfortunately, these devices are limited in the manner in which they can efficiently display information and receive user input. Specifically, multiple applications and desktops cannot be adequately shown on a single screen and require the user to constantly switch between displayed pages to access content from more than one application. Additionally, user input devices such as keyboards, touch-sensitive or capacitive displays, and hardware interface buttons are usually reduced in size to fit onto a single-screen device. Manipulating this type of device, and being forced to switch between multiple applications that only use one screen results in user fatigue, frustration, and in some cases repetitive motion injuries.

Recently, dual-screen devices have been made available to consumers of electronic devices. However, the currently available dual-screen devices have failed to adequately address the needs of the consumer. Although the devices include two screens in their design, the devices tend to be cumbersome and difficult to maneuver. In particular, the typical dual-screen device has a relatively large envelope that detracts from the utility and aesthetics of the device. For example, as the envelope of the device increases in size, a user experiences increased difficulty in storing and/or using the device, for example as a mobile phone. In addition, the typical dual-screen device includes a bulky hinge that increases the

overall envelope of the device. The present disclosure addresses the limitations of the traditional single/dual-screen devices and provides advantages in envelope size and maneuverability.

In embodiments, the present disclosure provides a dual-screen device employing a mechanical design that reduces the overall envelope of the device while providing a robust housing that protects the internal components of the device. In embodiments, the device may utilize a selectively reinforced outer shell configured to reduce the thickness of the device. In some areas, the outer shell may be reinforced by additional material and/or internal components of the device, thereby enabling the envelope of the housing to be reduced as compared to typical dual-screen devices. For example, a polymeric material may be nanomolded on the housing to provide rigidity to predetermined areas of the housing. As another example, stiffeners may be selectively associated with the interior of the housing to provide rigidity to predetermined locations of the housing while not detracting from the overall size or appearance of the device. As a further example, operable device components, such as a battery and/or a printed circuit board, may be utilized to provide rigidity to the housing. Furthermore, in embodiments, the device may utilize a backing plate configured to provide rigidity and consistent behavior for at least one button associated with the device. The backing plate also may be utilized to define a datum for positioning a component, such as a battery, within the housing. Moreover, in embodiments, the device may utilize a compact hinge that is substantially disposed within an outer envelope of the device. The hinge may be at least partially disposed within opposing sidewalls of the dual screens and thus not detract from the overall size and/or appearance of the device. The hinge may include a plurality of axes, enabling a user to easily maneuver the dual screens between various orientations. Additionally, in embodiments, the device may include a secondary support for a dock connector to accommodate various misalignments and/or other connection issues with a peripheral device. In embodiments, the secondary support and/or the dock connector are not structurally connected to a printed circuit board, thereby removing the printed circuit board from the dock connector load path, which can damage the printed circuit board. These and other advantages will be apparent from the disclosure.

The phrases "at least one", "one or more", and "and/or" are open-ended expressions that are both conjunctive and disjunctive in operation. For example, each of the expressions "at least one of A, B and C", "at least one of A, B, or C", "one or more of A, B, and C", "one or more of A, B, or C" and "A, B, and/or C" means A alone, B alone, C alone, A and B together, A and C together, B and C together, or A, B and C together.

The term "a" or "an" entity refers to one or more of that entity. As such, the terms "a" (or "an"), "one or more" and "at least one" can be used interchangeably herein. It is also to be noted that the terms "comprising", "including", and "having" can be used interchangeably.

The term "automatic" and variations thereof, as used herein, refers to any process or operation done without material human input when the process or operation is performed. However, a process or operation can be automatic, even though performance of the process or operation uses material or immaterial human input, if the input is received before performance of the process or operation. Human input is deemed to be material if such input influences how the process or operation will be performed. Human input that consents to the performance of the process or operation is not deemed to be "material".

The term "computer-readable medium" as used herein refers to any tangible storage and/or transmission medium that participate in providing instructions to a processor for execution. Such a medium may take many forms, including but not limited to, non-volatile media, volatile media, and transmission media. Non-volatile media includes, for example, NVRAM, or magnetic or optical disks. Volatile media includes dynamic memory, such as main memory. Common forms of computer-readable media include, for example, a floppy disk, a flexible disk, hard disk, magnetic tape, or any other magnetic medium, magneto-optical medium, a CD-ROM, any other optical medium, punch cards, paper tape, any other physical medium with patterns of holes, a RAM, a PROM, and EPROM, a FLASH-EPROM, a solid state medium like a memory card, any other memory chip or cartridge, a carrier wave as described hereinafter, or any other medium from which a computer can read. A digital file attachment to e-mail or other self-contained information archive or set of archives is considered a distribution medium equivalent to a tangible storage medium. When the computer-readable media is configured as a database, it is to be understood that the database may be any type of database, such as relational, hierarchical, object-oriented, and/or the like. Accordingly, the disclosure is considered to include a tangible storage medium or distribution medium and prior art-recognized equivalents and successor media, in which the software implementations of the present disclosure are stored.

The term "desktop" refers to a metaphor used to portray systems. A desktop is generally considered a "surface" that typically includes pictures, called icons, widgets, folders, etc. that can activate show applications, windows, cabinets, files, folders, documents, and other graphical items. The icons are generally selectable to initiate a task through user interface interaction to allow a user to execute applications or conduct other operations.

The term "screen," "touch screen," or "touchscreen" refers to a physical structure that includes one or more hardware components that provide the device with the ability to render a user interface and/or receive user input. A screen can encompass any combination of gesture capture region, a touch sensitive display, and/or a configurable area. The device can have one or more physical screens embedded in the hardware. However a screen may also include an external peripheral device that may be attached and detached from the device. In embodiments, multiple external devices may be attached to the device. Thus, in embodiments, the screen can enable the user to interact with the device by touching areas on the screen and provides information to a user through a display. The touch screen may sense user contact in a number of different ways, such as by a change in an electrical parameter (e.g., resistance or capacitance), acoustic wave variations, infrared radiation proximity detection, light variation detection, and the like. In a resistive touch screen, for example, normally separated conductive and resistive metallic layers in the screen pass an electrical current. When a user touches the screen, the two layers make contact in the contacted location, whereby a change in electrical field is noted and the coordinates of the contacted location calculated. In a capacitive touch screen, a capacitive layer stores electrical charge, which is discharged to the user upon contact with the touch screen, causing a decrease in the charge of the capacitive layer. The decrease is measured, and the contacted location coordinates determined. In a surface acoustic wave touch screen, an acoustic wave is transmitted through the screen, and the acoustic wave is disturbed by user contact. A receiving transducer detects the user contact instance and determines the contacted location coordinates.

The term "display" refers to a portion of one or more screens used to display the output of a computer to a user. A display may be a single-screen display or a multi-screen display, referred to as a composite display. A composite display can encompass the touch sensitive display of one or more screens. A single physical screen can include multiple displays that are managed as separate logical displays. Thus, different content can be displayed on the separate displays although part of the same physical screen.

The term "displayed image" refers to an image produced on the display. A typical displayed image is a window or desktop. The displayed image may occupy all or a portion of the display.

The term "display orientation" refers to the way in which a rectangular display is oriented by a user for viewing. The two most common types of display orientation are portrait and landscape. In landscape mode, the display is oriented such that the width of the display is greater than the height of the display (such as a 4:3 ratio, which is 4 units wide and 3 units tall, or a 16:9 ratio, which is 16 units wide and 9 units tall). Stated differently, the longer dimension of the display is oriented substantially horizontal in landscape mode while the shorter dimension of the display is oriented substantially vertical. In the portrait mode, by contrast, the display is oriented such that the width of the display is less than the height of the display. Stated differently, the shorter dimension of the display is oriented substantially horizontal in the portrait mode while the longer dimension of the display is oriented substantially vertical.

The term "composited display" refers to a logical structure that defines a display that can encompass one or more screens. A multi-screen display can be associated with a composite display that encompasses all the screens. The composite display can have different display characteristics based on the various orientations of the device.

The term "gesture" refers to a user action that expresses an intended idea, action, meaning, result, and/or outcome. The user action can include manipulating a device (e.g., opening or closing a device, changing a device orientation, moving a trackball or wheel, etc.), movement of a body part in relation to the device, movement of an implement or tool in relation to the device, audio inputs, etc. A gesture may be made on a device (such as on the screen) or with the device to interact with the device.

The term "module" as used herein refers to any known or later developed hardware, software, firmware, artificial intelligence, fuzzy logic, or combination of hardware and software that is capable of performing the functionality associated with that element.

The term "gesture capture" refers to a sense or otherwise a detection of an instance and/or type of user gesture. The gesture capture can occur in one or more areas of the screen, A gesture region can be on the display, where it may be referred to as a touch sensitive display or off the display where it may be referred to as a gesture capture area.

A "multi-screen application" refers to an application that is capable of multiple modes. The multi-screen application mode can include, but is not limited to, a single screen mode (where the application is displayed on a single screen) or a composite display mode (where the application is displayed on two or more screens). A multi-screen application can have different layouts optimized for the mode. Thus, the multi-screen application can have different layouts for a single screen or for a composite display that can encompass two or more screens. The different layouts may have different screen/display dimensions and/or configurations on which the user interfaces of the multi-screen applications can be rendered. The different layouts allow the application to optimize the application's user interface for the type of display, e.g., single screen or multiple screens. In single screen mode, the multi-screen application may present one window pane of information. In a composite display mode, the multi-screen application may present multiple window panes of information or may provide a larger and a richer presentation because there is more space for the display contents. The multi-screen applications may be designed to adapt dynamically to changes in the device and the mode depending on which display (single or composite) the system assigns to the multi-screen application. In alternative embodiments, the user can use a gesture to request the application transition to a different mode, and, if a display is available for the requested mode, the device can allow the application to move to that display and transition modes.

A "single-screen application" refers to an application that is capable of single screen mode. Thus, the single-screen application can produce only one window and may not be capable of different modes or different display dimensions. A single-screen application is incapable of the several modes discussed with the multi-screen application.

The term "window" refers to a, typically rectangular, displayed image on at least part of a display that contains or provides content different from the rest of the screen. The window may obscure the desktop.

The terms "determine", "calculate" and "compute," and variations thereof, as used herein, are used interchangeably and include any type of methodology, process, mathematical operation or technique.

It shall be understood that the term "means" as used herein shall be given its broadest possible interpretation in accordance with 35 U.S.C., Section 112, Paragraph 6. Accordingly, a claim incorporating the term "means" shall cover all structures, materials, or acts set forth herein, and all of the equivalents thereof. Further, the structures, materials or acts and the equivalents thereof shall include all those described in the summary of the invention, brief description of the drawings, detailed description, abstract, and claims themselves.

Unless otherwise indicated, all dimensions included in the figures are to be understood as being modified in all instances by the term "about". All dimensions included in the figures have units of millimeters or degrees.

The preceding is a simplified summary of the disclosure to provide an understanding of some aspects of the disclosure. This summary is neither an extensive nor exhaustive overview of the disclosure and its various aspects, embodiments, and/or configurations. It is intended neither to identify key or critical elements of the disclosure nor to delineate the scope of the disclosure but to present selected concepts of the disclosure in a simplified form as an introduction to the more detailed description presented below. As will be appreciated, other aspects, embodiments, and/or configurations of the disclosure are possible utilizing, alone or in combination, one or more of the features set forth above or described in detail below.

BRIEF DESCRIPTION OF THE DRAWINGS

FIG. **1**A includes a first view of an embodiment of a multi-screen user device;

FIG. **1**B includes a second view of an embodiment of a multi-screen user device;

FIG. **1**C includes a third view of an embodiment of a multi-screen user device;

FIG. **1**D includes a fourth view of an embodiment of a multi-screen user device;

FIG. **1**E includes a fifth view of an embodiment of a multi-screen user device;

FIG. **1**F includes a sixth view of an embodiment of a multi-screen user device;

FIG. **1**G includes a seventh view of an embodiment of a multi-screen user device;

FIG. **1**H includes a eighth view of an embodiment of a multi-screen user device;

FIG. **1**I includes a ninth view of an embodiment of a multi-screen user device;

FIG. **1**J includes a tenth view of an embodiment of a multi-screen user device;

FIG. **1**K includes an eleventh view of an embodiment of a multi-screen user device;

FIG. **1**L includes a twelfth view of an embodiment of a multi-screen user device;

FIG. **1**M includes a thirteenth view of an embodiment of a multi-screen user device;

FIG. **2** is a block diagram of an embodiment of the hardware of the device;

FIG. **3**A is a block diagram of an embodiment of the state model for the device based on the device's orientation and/or configuration;

FIG. **3**B is a table of an embodiment of the state model for the device based on the device's orientation and/or configuration;

FIG. **4**A is a first representation of an embodiment of user gesture received at a device;

FIG. **4**B is a second representation of an embodiment of user gesture received at a device;

FIG. **4**C is a third representation of an embodiment of user gesture received at a device;

FIG. **4**D is a fourth representation of an embodiment of user gesture received at a device;

FIG. **4**E is a fifth representation of an embodiment of user gesture received at a device;

FIG. **4**F is a sixth representation of an embodiment of user gesture received at a device;

FIG. **4**G is a seventh representation of an embodiment of user gesture received at a device;

FIG. **4**H is a eighth representation of an embodiment of user gesture received at a device;

FIG. **5**A is a block diagram of an embodiment of the device software and/or firmware;

FIG. **5**B is a second block diagram of an embodiment of the device software and/or firmware;

FIG. **6**A is a first representation of an embodiment of a device configuration generated in response to the device state;

FIG. **6**B is a second representation of an embodiment of a device configuration generated in response to the device state;

FIG. **6**C is a third representation of an embodiment of a device configuration generated in response to the device state;

FIG. **6**D is a fourth representation of an embodiment of a device configuration generated in response to the device state;

FIG. **6**E is a fifth representation of an embodiment of a device configuration generated in response to the device state;

FIG. **6**F is a sixth representation of an embodiment of a device configuration generated in response to the device state;

FIG. **6**G is a seventh representation of an embodiment of a device configuration generated in response to the device state;

FIG. **6**H is a eighth representation of an embodiment of a device configuration generated in response to the device state;

FIG. **6**I is a ninth representation of an embodiment of a device configuration generated in response to the device state;

FIG. **6**J is a tenth representation of an embodiment of a device configuration generated in response to the device state;

FIG. **7** is a perspective view of an embodiment of a first housing and second housing of a multi-screen device;

FIGS. **8**A-I are views of an embodiment of a hinge with example dimensions;

FIG. **9** is a perspective view of an embodiment of a first and second housing of a multi-screen device with a flexible circuit passing through an internal passage of the hinge;

FIG. **10** is a view of an embodiment of a first housing;

FIGS. **11**A-C are views of an embodiment of a backing plate with example dimensions;

FIG. **12** is a perspective view of a second housing;

FIGS. **13**A-C are views of an embodiment of a corrugated stiffener with example dimensions;

FIG. **14** is a perspective view of a second housing with an input/output retainer bracket;

FIGS. **15**A-D are views of an embodiment of an input/output retainer bracket with example dimensions;

FIG. **16** is a side view of the device according to an embodiment;

FIG. **17** is an enlarged view of the first and second screen assemblies according to an embodiment;

FIG. **18** is a top view of a section **1800** (FIG. **1**B) according to an embodiment;

FIG. **19** is a plan view of a flexible electrically conductive member according to an embodiment;

FIG. **20**A is a sectional view along line A-A of FIG. **19**;

FIG. **20**B is a sectional view along line B-B of FIG. **19**;

FIG. **20**C is a sectional view along line C-C of FIG. **19**;

FIG. **20**D is a sectional view along line D-D of FIG. **19**;

FIG. **20**E is a sectional view along line E-E of FIG. **19**;

FIG. **20**F is a sectional view along line F-F of FIG. **19**;

FIG. **20**G is a sectional view along line G-G of FIG. **19**;

FIG. **20**H is a sectional view along line H-H of FIG. **19**;

FIG. **20**J is a sectional view along line J-J of FIG. **19**;

FIG. **20**K is a sectional view along line K-K of FIG. **19**;

FIG. **20**L is a sectional view along line L-L of FIG. **19**;

FIG. **20**M is a sectional view along line M-M of FIG. **19**;

FIG. **20**N is a sectional view along line N-N of FIG. **19**;

FIG. **21**A is a top view of a display panel frame according to an embodiment;

FIG. **21**B is a bottom view of the display panel frame;

FIG. **22**A is a sectional view along line A-A of FIG. **21**A

FIG. **22**B is a sectional view along line B-B of FIG. **21**A;

FIG. **22**C is a sectional view along line C-C of FIG. **21**A;

FIG. **22**D is a sectional view along line D-D of FIG. **21**A;

FIG. **22**E is an enlarged view of the highlighted feature of FIG. **22**A;

FIG. **22**F is an enlarged view of the highlighted feature of FIG. **22**B;

FIG. **22**G is an enlarged view of the highlighted feature of FIG. **22**C;

FIG. **22**H is an enlarged view of the highlighted feature of FIG. **22**D;

FIG. **23** is an isometric view of the device in the fully open position;

FIG. **24** is an exploded view of the device in the fully open position according to an embodiment;

FIG. **25** is an exploded view of the device in the fully open position according to an embodiment;

FIG. **26** is a partial side cross-sectional view of the device according to an embodiment;

FIG. **27** is an enlarged view of the cross-sectional detail of FIG. **26**;

FIG. **28**A is a top view of the support bracket and light guides according to an embodiment;

FIG. **28**B is a front view of the support bracket and light guides;

FIG. **28**C is a bottom view of the support bracket and light guides;

FIG. **28**D is a rear view of the support bracket and light guides;

FIGS. **29**A-B depict the light guides in bottom and top views, respectively;

FIG. **30**A is a rear view of the device according to an embodiment;

FIG. **30**B is a sectional view along line B-B of FIG. **30**A;

FIG. **30**C is an enlarged view of a sectional view of FIG. **30**B;

FIG. **30**D is an enlarged view of a sectional view of FIG. **30**B;

FIG. **30**E depicts the sectional views of FIG. **30**B when the device is in the fully closed position;

FIG. **31**A is a rear view of the device according to an embodiment;

FIG. **31**B are sectional views along line B-B of FIG. **30**A;

FIG. **31**C is an enlarged view of a sectional view of FIG. **31**B; and

FIG. **31**D is an enlarged view of a sectional view of FIG. **31**B.

In the appended figures, similar components and/or features may have the same reference label. Further, various components of the same type may be distinguished by following the reference label by a letter that distinguishes among the similar components. If only the first reference label is used in the specification, the description is applicable to any one of the similar components having the same first reference label irrespective of the second reference label.

DETAILED DESCRIPTION

Presented herein are embodiments of a device. The device can be a communications device, such as a cellular telephone, or other smart device. The device can include two screens that are oriented to provide several unique display configurations. Further, the device can receive user input in unique ways. The overall design and functionality of the device provides for an enhanced user experience making the device more useful and more efficient.

Mechanical Features:

FIGS. **1**A-**1**M illustrate a device **100** in accordance with embodiments of the present disclosure. As described in greater detail below, device **100** can be positioned in a number of different ways each of which provides different functionality to a user. The device **100** is a multi-screen device that includes a first screen **104** and a second screen **108**, both of which are touch sensitive. In embodiments, the entire front surface of screens **104** and **108** may be touch sensitive and capable of receiving input by a user touching the front surface **102** of the screens **104** and **108**. First screen **104** includes touch sensitive display **110**, which, in addition to being touch sensitive, also displays information to a user. Second screen **108** includes touch sensitive display **114**, which also displays information to a user. In other embodiments, screens **104** and **108** may include more than one display area.

First screen **104** also includes a configurable area **112** that has been configured for specific inputs when the user touches portions of the configurable area **112**. Second screen **108** also includes a configurable area **116** that has been configured for specific inputs. Areas **112***a* and **116***a* have been configured to receive a "back" input indicating that a user would like to view information previously displayed. Areas **112***b* and **116***b* have been configured to receive a "menu" input indicating that the user would like to view options from a menu. Areas **112***c* and **116***c* have been configured to receive a "home" input indicating that the user would like to view information associated with a "home" view. In other embodiments, areas **112***a-c* and **116***a-c* may be configured, in addition to the configurations described above, for other types of specific inputs including controlling features of device **100**, some non-limiting examples including adjusting overall system power, adjusting the volume, adjusting the brightness, adjusting the vibration, selecting of displayed items (on either of screen **104** or **108**), operating a camera, operating a microphone, and initiating/terminating of telephone calls. Also, in some embodiments, areas **112***a-c* and **116***a-c* may be configured for specific inputs depending upon the application running on device **100** and/or information displayed on touch sensitive displays **110** and/or **114**.

In addition to touch sensing, first screen **104** and second screen **108** may also include areas that receive input from a user without requiring the user to touch the display area of the screen. For example, first screen **104** includes gesture capture area **120**, and second screen **108** includes gesture capture area **124**. These areas are able to receive input by recognizing gestures made by a user without the need for the user to actually touch the surface of the display area. In comparison to touch sensitive displays **110** and **114**, the gesture capture areas **120** and **124** are commonly not capable of rendering a displayed image.

The two screens **104** and **108** are connected together with a hinge **128**, shown clearly in FIG. **1**C (illustrating a rear view of device **100**). Hinge **128**, in the embodiment shown in FIGS. **1**A-**1**M, is a center hinge that connects screens **104** and **108** so that when the hinge is closed, screens **104** and **108** are juxtaposed (i.e., side-by-side) as shown in FIG. **1**B (illustrating a front view of device **100**). Hinge **128** can be opened to position the two screens **104** and **108** in different relative positions to each other. As described in greater detail below, the device **100** may have different functionalities depending on the relative positions of screens **104** and **108**.

FIG. **1**D illustrates the right side of device **100**. As shown in FIG. **1**D, second screen **108** also includes a card slot **132** and a port **136** on its side. Card slot **132** in embodiments, accommodates different types of cards including a subscriber identity module (SIM). Port **136** in embodiments is an input/output port (I/O port) that allows device **100** to be connected to other peripheral devices, such as a display, keyboard, or printing device. As can be appreciated, these are merely some examples and in other embodiments device **100** may include other slots and ports such as slots and ports for accommodating additional memory devices and/or for connecting other peripheral devices. Also shown in FIG. **1**D is an audio jack **140** that accommodates a tip, ring, sleeve (TRS) connector for example to allow a user to utilize headphones or a headset.

Device **100** also includes a number of buttons **158**. For example, FIG. **1**E illustrates the left side of device **100**. As shown in FIG. **1**E, the side of first screen **104** includes three buttons **144**, **148**, and **152**, which can be configured for specific inputs. For example, buttons **144**, **148**, and **152** may be configured to, in combination or alone, control a number of aspects of device **100**. Some non-limiting examples include overall system power, volume, brightness, vibration, selection of displayed items (on either of screen **104** or **108**), a camera, a microphone, and initiation/termination of telephone calls. In some embodiments, instead of separate buttons two buttons may be combined into a rocker button **154**, an example of which is shown in FIG. **1**L. This arrangement is useful in situations where the buttons are configured to control features such as volume or brightness. In addition to buttons **144**, **148**, and **152**, device **100** also includes a button **156**, shown in FIG. **1**F, which illustrates the top of device **100**.

In one embodiment, button **156** is configured as an on/off button used to control overall system power to device **100**. In other embodiments, button **156** is configured to, in addition to or in lieu of controlling system power, control other aspects of device **100**. In some embodiments, one or more of the buttons **144**, **148**, **152**, **154**, and **156** are capable of supporting different user commands. By way of example, a normal press has a duration commonly of less than about 1 second and resembles a quick tap. A medium press has a duration commonly of 1 second or more but less than about 12 seconds. A long press has a duration commonly of about 12 seconds or more. The function of the buttons is normally specific to the application that is currently in focus on the respective display **110** and **114**. In a telephone application for instance and depending on the particular button, a normal, medium, or long press can mean end call, increase in call volume, decrease in call volume, and toggle microphone mute. In a camera or video application for instance and depending on the particular button, a normal, medium, or long press can mean increase zoom, decrease zoom, and take photograph or record video.

There are also a number of hardware components within device **100**. As illustrated in FIG. **1**C, device **100** includes a speaker **160** and a microphone **164**. Device **100** also includes a camera **168** (FIG. **1**B). Additionally, device **100** includes two position sensors **172**A and **172**B, which are used to determine the relative positions of screens **104** and **108**. In one embodiment, position sensors **172**A and **172**B are Hall effect sensors (discussed below with reference to FIGS. **31**A-D). However, in other embodiments other sensors can be used in addition to or in lieu of the Hall effect sensors. An accelerometer **176** may also be included as part of device **100** to determine the orientation of the device **100** and/or the orientation of screens **104** and **108**. Additional internal hardware components that may be included in device **100** are described below with respect to FIG. **2**.

The overall design of device **100** allows it to provide additional functionality not available in other communication devices. Some of the functionality is based on the various positions and orientations that device **100** can have. As shown in FIGS. **1**B-**1**G, device **100** can be operated in an "open" position where screens **104** and **108** are juxtaposed. This position allows a large display area for displaying information to a user. When position sensors **172**A and **172**B determine that device **100** is in the open position, they can generate a signal that can be used to trigger different events such as displaying information on both screens **104** and **108**. Additional events may be triggered if accelerometer **176** determines that device **100** is in a portrait position (FIG. **1**B) as opposed to a landscape position (not shown).

In addition to the open position, device **100** may also have a "closed" position illustrated in FIGS. **1**K, **1**L, and **1**M. Again, position sensors **172**A and **172**B can generate a signal indicating that device **100** is in the "closed" position. This can trigger an event that results in a change of displayed information on screen **104** and/or **108**. For example, device **100** may be programmed to stop displaying information on one of the screens, e.g., screen **108**, since a user can only view one screen at a time when device **100** is in the "closed" position. In other embodiments, the signal generated by position sensors **172**A and **172**B, indicating that the device **100** is in the "closed" position, can trigger device **100** to answer an incoming telephone call. The "closed" position can also be a preferred position for utilizing the device **100** as a mobile phone.

Device **100** may also have a beveled edge to assist a user in gripping and opening the device **100** when in the closed position. FIGS. **1**K-**1**M illustrate side views of embodiments of a device **100** having a beveled edge **180** formed in at least one side of at least one of the screens **104** and **108**. In the depicted example, each screen **104** and **108** has a front surface **102**, a rear surface **184**, and a beveled edge **180** extending between the front surface **102** and the rear surface **184**. When the device is in the closed position, the beveled edge **180** of each screen **104** and **108** angles inwardly toward the other respective screen **104** and **108** to provide an angled surface configured to facilitate gripping and/or opening the device **100**. To open the device **100** from the closed position, a user may place at least one finger on a beveled edge **180** to pry open the device **100**.

The beveled edge **180** can be formed at various angles relative to the front and/or rear surfaces **102** and **184** of the respective screens **104** and **108**. In one embodiment, a beveled edge **180** is formed in each screen **104** and **108** at an angle between about 30 to about 90 degrees relative to the front surface **102** of the respective screens **104** and **108**. In another embodiment, a beveled edge **180** is formed in each screen **104** and **108** at an angle between about 60 to about 85 degrees relative to the front surface **102** of the respective screens **104** and **108**. If formed in each screen **104** and **108**, the beveled edge **180** of each screen **104** and **108** may be formed at approximately the same angle, or different angles, relative to the front surface **102** of the respective screens **104** and **108**.

The beveled edge **180** can be formed in various sides of at least one of the screens **104** and **108**. For example, at least one side of at least one of the screens **104** and **108** may be angled relative to the front and/or rear surfaces **102** and/or **184** of the respective screen. In one embodiment, at least one side of the first screen **104** and at least one side of the second screen **108** is angled relative to the front and rear surfaces **102** and **184** of the respective screen. Referring to FIGS. **1**K-**1**M, the beveled edge **180** is formed in at least a portion of three sides **188***a*, **188***b*, and **188***c* of each screen **104** and **108**. Referring specifically to FIG. **1**L, a view of the left side **188***a* of the device **100** is provided and illustrates a beveled edge **180** formed in a portion of the top side **188***b* and the bottom side **188***c* of each screen **104** and **108**. Referring now to FIG. **1**K, a view of the bottom side **188***c* of the device **100** is provided and illustrates the beveled edge **180** formed in a portion of the bottom side **188***c* of each screen **104** and **108**, and further illustrates the beveled edge **180** formed in the left side **188***a* of each screen **104** and **108**. Also illustrated in FIG. **1**K, the beveled edge **180** does not extend to the right side **188***d* of the device **100**. Referring to FIG. **1**M, a view of the right side **188***d* of the device **100** is provided and illustrates the hinge **128** is positioned centrally in the right side **188***d* of the device **100**.

Referring still to FIGS. **1**K-**1**M, the beveled edge **180** may be formed in each screen **104** and **108** to oppose each other when the device is in the closed position. For example, the beveled edge **180** illustrated in FIGS. **1**K-**1**M is formed in the same sides of the screens **104** and **108** and is formed in each screen to be substantially a mirror image about the back surfaces **184** of the screens **104** and **108** when the device is in the closed position. In alternative embodiments, the beveled edge **180** may be formed in non-complementary locations along the sides of the device **100**. For example, a beveled edge **180** may be formed on different sides of the screens **104** and **108** and/or on an adjacent side but in different locations along the respective side of the device **100**.

Audio jacks, buttons, ports, and/or slots can be included in the beveled edge **180**. In FIG. **1**L, a button **152** and a rocker button **154** are associated with the beveled edge **180** of the first screen **104**, and an audio jack **140**, a card slot **132** and a port **136** are formed in the beveled edge **180** of the second screen **108**. The button, ports, and/or slots can be included in a beveled edge **180** of any screen or side of the device **100**.

Other features also can be associated with the beveled edge **180** to facilitate gripping and/or opening the device **100**. For example, an elastomeric material, such as rubber, may be adhered to the beveled edge **180** to improve grip. As another example, surface protuberances, such as detents, protrusions, and/or ridges, may be formed in or connected to the beveled edge **180** to assist in gripping and/or opening the device **100**. In alternative embodiments, these other features may be associated with non-beveled portions of at least one side of at least one screen of the device **100** to ease gripping and/or opening the device **100**.

In embodiments, at least one side **188***a*, **188***b*, **188***c*, and **188***d* of at least one screen **104** and **108** can be arcuate shaped. For example, at least one side can be convex and/or concave to facilitate gripping and/or opening the device **100**. In addition, at least one edge of the front surface **102** and/or rear surface **184** of the first screen **104** and/or second screen **108** may be rounded. In one embodiment, every edge of the front surface **102** and the rear surface **184** of each screen **104** and **108** is rounded with a predetermined radius of curvature to remove all sharp edges of the device **100**.

Device **100** can also be used in an "easel" position which is illustrated in FIG. **1**I. In the "easel" position, screens **104** and **108** are angled with respect to each other and facing outward with the edges of screens **104** and **108** substantially horizontal. In this position, device **100** can be configured to display information on both screens **104** and **108** to allow two users to simultaneously interact with device **100**. When device **100** is in the "easel" position, sensors **172**A and **172**B generate a signal indicating that the screens **104** and **108** are positioned at an angle to each other, and the accelerometer **176** can generate a signal indicating that device **100** has been placed so that the edge of screens **104** and **108** are substantially horizontal. The signals can then be used in combination to generate events that trigger changes in the display of information on screens **104** and **108**.

FIG. **1**J illustrates device **100** in a "modified easel" position. In the "modified easel" position, one of screens **104** or **108** is used as a stand and is faced down on the surface of an object such as a table. This position provides a convenient way for information to be displayed to a user in landscape orientation. Similar to the easel position, when device **100** is in the "modified easel" position, position sensors **172**A and **172**B generate a signal indicating that the screens **104** and **108** are positioned at an angle to each other. The accelerometer **176** would generate a signal indicating that device **100** has been positioned so that one of screens **104** and **108** is faced downwardly and is substantially horizontal. The signals can then be used to generate events that trigger changes in the display of information of screens **104** and **108**. For example, information may not be displayed on the screen that is face down since a user cannot see the screen.

Transitional states are also possible. When the position sensors **172**A and B and/or accelerometer indicate that the screens are being closed or folded (from open), a closing transitional state is recognized. Conversely when the position sensors **172**A and B indicate that the screens are being opened or folded (from closed), an opening transitional state is recognized. The closing and opening transitional states are typically time-based, or have a maximum time duration from a sensed starting point. Normally, no user input is possible when one of the closing and opening states is in effect. In this manner, incidental user contact with a screen during the closing or opening function is not misinterpreted as user input. In embodiments, another transitional state is possible when the device **100** is closed. This additional transitional state allows the display to switch from one screen **104** to the second screen **108** when the device **100** is closed based on some user input, e.g., a double tap on the screen **110**,**114**.

As can be appreciated, the description of device **100** is made for illustrative purposes only, and the embodiments are not limited to the specific mechanical features shown in FIGS. **1**A-**1**M and described above. In other embodiments, device **100** may include additional features, including one or more additional buttons, slots, display areas, hinges, and/or locking mechanisms. Additionally, in embodiments, the features described above may be located in different parts of device **100** and still provide similar functionality. Therefore, FIGS. **1**A-**1**M and the description provided above are non-limiting.

Hardware Features:

FIG. **2** illustrates components of a device **100** in accordance with embodiments of the present disclosure. In general, the device **100** includes a first screen **104** and a second screen **108**. While the first screen **104** and its components are normally enabled in both the opened and closed positions or states, the second screen **108** and its components are normally enabled in the opened state but disabled in the closed state. However, even when in the closed state a user or application triggered interrupt (such as in response to a phone application or camera application operation) can flip the active screen, or disable the first screen **104** and enable the second screen **108**, by a suitable command. Each screen **104**, **108** can be touch sensitive and can include different operative areas. For example, a first operative area, within each touch sensitive screen **104** and **108**, may comprise a touch sensitive display **110**, **114**. In general, the touch sensitive display **110**, **114** may comprise a full color, touch sensitive display. A second area within each touch sensitive screen **104** and **108** may comprise a gesture capture region **120**, **124**. The gesture capture region **120**, **124** may comprise an area or region that is outside of the touch sensitive display **110**, **114** area, and that is capable of receiving input, for example in the form of gestures provided by a user. However, the gesture capture region **120**, **124** does not include pixels that can perform a display function or capability.

A third region of the touch sensitive screens **104** and **108** may comprise a configurable area **112**, **116**. The configurable area **112**, **116** is capable of receiving input and has display or limited display capabilities. In embodiments, the configurable area **112**, **116** may present different input options to the user. For example, the configurable area **112**, **116** may display buttons or other relatable items. Moreover, the identity of displayed buttons, or whether any buttons are displayed at all within the configurable area **112**, **116** of a touch sensitive screen **104** or **108**, may be determined from the context in which the device **100** is used and/or operated. In an exemplary embodiment, the touch sensitive screens **104** and **108** comprise liquid crystal display devices extending across at least those regions of the touch sensitive screens **104** and **108** that are capable of providing visual output to a user, and a capacitive input matrix over those regions of the touch sensitive screens **104** and **108** that are capable of receiving input from the user.

One or more display controllers **216***a*, **216***b* may be provided for controlling the operation of the touch sensitive screens **104** and **108**, including input (touch sensing) and output (display) functions. In the exemplary embodiment illustrated in FIG. **2**, a separate touch screen controller **216***a* or **216***b* is provided for each touch screen **104** and **108**. In accordance with alternate embodiments, a common or shared touch screen controller may be used to control each of the included touch sensitive screens **104** and **108**. In accordance

with still other embodiments, the functions of a touch screen controller may be incorporated into other components, such as a processor **204**.

The processor **204** may comprise a general purpose programmable processor or controller for executing application programming or instructions. In accordance with at least some embodiments, the processor **204** may include multiple processor cores, and/or implement multiple virtual processors. In accordance with still other embodiments, the processor **204** may include multiple physical processors. As a particular example, the processor **204** may comprise a specially configured application specific integrated circuit (ASIC) or other integrated circuit, a digital signal processor, a controller, a hardwired electronic or logic circuit, a programmable logic device or gate array, a special purpose computer, or the like. The processor **204** generally functions to run programming code or instructions implementing various functions of the device **100**.

A communication device **100** may also include memory **208** for use in connection with the execution of application programming or instructions by the processor **204**, and for the temporary or long term storage of program instructions and/or data. As examples, the memory **208** may comprise RAM, DRAM, SDRAM, or other solid state memory. Alternatively or in addition, data storage **212** may be provided. Like the memory **208**, the data storage **212** may comprise a solid state memory device or devices. Alternatively or in addition, the data storage **212** may comprise a hard disk drive or other random access memory.

In support of communications functions or capabilities, the device **100** can include a cellular telephony module **228**. As examples, the cellular telephony module **228** can comprise a GSM, CDMA, FDMA and/or analog cellular telephony transceiver capable of supporting voice, multimedia and/or data transfers over a cellular network. Alternatively or in addition, the device **100** can include an additional or other wireless communications module **232**. As examples, the other wireless communications module **232** can comprise a Wi-Fi, BLUETOOTH™, WiMax, infrared, or other wireless communications link. The cellular telephony module **228** and the other wireless communications module **232** can each be associated with a shared or a dedicated antenna **224**.

A port interface **252** may be included. The port interface **252** may include proprietary or universal ports to support the interconnection of the device **100** to other devices or components, such as a dock, which may or may not include additional or different capabilities from those integral to the device **100**. In addition to supporting an exchange of communication signals between the device **100** and another device or component, the docking port **136** and/or port interface **252** can support the supply of power to or from the device **100**. The port interface **252** also comprises an intelligent element that comprises a docking module for controlling communications or other interactions between the device **100** and a connected device or component.

An input/output module **248** and associated ports may be included to support communications over wired networks or links, for example with other communication devices, server devices, and/or peripheral devices. Examples of an input/output module **248** include an Ethernet port, a Universal Serial Bus (USB) port, Institute of Electrical and Electronics Engineers (IEEE) 1394, or other interface.

An audio input/output interface/device(s) **244** can be included to provide analog audio to an interconnected speaker or other device, and to receive analog audio input from a connected microphone or other device. As an example, the audio input/output interface/device(s) **244** may comprise an associated amplifier and analog to digital converter. Alternatively or in addition, the device **100** can include an integrated audio input/output device **256** and/or an audio jack for interconnecting an external speaker or microphone. For example, an integrated speaker and an integrated microphone can be provided, to support near talk or speaker phone operations.

Hardware buttons **158** can be included for example for use in connection with certain control operations. Examples include a master power switch, volume control, etc., as described in conjunction with FIGS. **1**A through **1**J. One or more image capture interfaces/devices **240**, such as a camera, can be included for capturing still and/or video images. Alternatively or in addition, an image capture interface/device **240** can include a scanner or code reader. An image capture interface/device **240** can include or be associated with additional elements, such as a flash or other light source.

The device **100** can also include a global positioning system (GPS) receiver **236**. In accordance with embodiments of the present invention, the GPS receiver **236** may further comprise a GPS module that is capable of providing absolute location information to other components of the device **100**. An accelerometer(s) **176** may also be included. For example, in connection with the display of information to a user and/or other functions, a signal from the accelerometer **176** can be used to determine an orientation and/or format in which to display that information to the user.

Embodiments of the present invention can also include one or more position sensor(s) **172**. The position sensor **172** can provide a signal indicating the position of the touch sensitive screens **104** and **108** relative to one another. This information can be provided as an input, for example to a user interface application, to determine an operating mode, characteristics of the touch sensitive displays **110**, **114**, and/or other device **100** operations. As examples, a screen position sensor **172** can comprise a series of Hall effect sensors, a reed switch, a multiple position switch, an optical switch, a Wheatstone bridge, a potentiometer, a mechanical switch on the hinge **128**, or other arrangement capable of providing a signal indicating of multiple relative positions the touch screens are in.

Communications between various components of the device **100** can be carried by one or more buses **222**. In addition, power can be supplied to the components of the device **100** from a power source and/or power control module **260**. The power control module **260** can, for example, include a battery, an AC to DC converter, power control logic, and/or ports for interconnecting the device **100** to an external source of power.

Device State:

FIGS. **3**A and **3**B represent illustrative states of device **100**. While a number of illustrative states are shown, and transitions from a first state to a second state, it is to be appreciated that the illustrative state diagram may not encompass all possible states and/or all possible transitions from a first state to a second state. As illustrated in FIG. **3**, the various arrows between the states (illustrated by the state represented in the circle) represent a physical change that occurs to the device **100**, that is detected by one or more of hardware and software, the detection triggering one or more of a hardware and/or software interrupt that is used to control and/or manage one or more functions of device **100**.

As illustrated in FIG. **3**A, there are twelve exemplary "physical" states: closed **304**, transition **308** (or opening transitional state), easel **312**, modified easel **316**, open **320**, inbound/outbound call or communication **324**, image/video capture **328**, transition **332** (or closing transitional state), landscape **340**, docked **336**, docked **344** and landscape **348**. Next to each illustrative state is a representation of the physi-

cal state of the device **100** with the exception of states **324** and **328**, where the state is generally symbolized by the international icon for a telephone and the icon for a camera, respectfully.

In state **304**, the device is in a closed state with the device **100** generally oriented in the portrait direction with the first screen **104** and the second screen **108** back-to-back in different planes (see FIG. **1**H). From the closed state, the device **100** can enter, for example, docked state **336**, where the device **100** is coupled with a docking station, docking cable, or in general docked or associated with one or more other devices or peripherals, or the landscape state **340**, where the device **100** is generally oriented with the first screen **104** facing the user, and the first screen **104** and the second screen **108** being back-to-back.

In the closed state, the device can also move to a transitional state where the device remains closed but the display is moved from one screen **104** to another screen **108** based on a user input, e.g., a double tap on the screen **110**, **114**. Still another embodiment includes a bilateral state. In the bilateral state, the device remains closed, but a single application displays at least one window on both the first display **110** and the second display **114**. The windows shown on the first and second display **110**, **114** may be the same or different based on the application and the state of that application. For example, while acquiring an image with a camera, the device may display the view finder on the first display **110** and displays a preview for the photo subjects (full screen and mirrored left-to-right) on the second display **114**.

In state **308**, a transition state from the closed state **304** to the semi-open state or easel state **312**, the device **100** is shown opening with the first screen **104** and the second screen **108** being rotated around a point of axis coincidence with the hinge. Upon entering the easel state **312**, the first screen **104** and the second screen **108** are separated from one another such that, for example, the device **100** can sit in an easel-like configuration on a surface.

In state **316**, known as the modified easel position, the device **100** has the first screen **104** and the second screen **108** in a similar relative relationship to one another as in the easel state **312**, with the difference being one of the first screen **104** or the second screen **108** are placed on a surface as shown.

State **320** is the open state where the first screen **104** and the second screen **108** are generally on the same plane. From the open state, the device **100** can transition to the docked state **344** or the open landscape state **348**. In the open state **320**, the first screen **104** and the second screen **108** are generally in the portrait-like orientation while in landscaped state **348** the first screen **104** and the second screen **108** are generally in a landscape-like orientation.

State **324** is illustrative of a communication state, such as when an inbound or outbound call is being received or placed, respectively, by the device **100**. While not illustrated for clarity, it should be appreciated the device **100** can transition to the inbound/outbound call state **324** from any state illustrated in FIG. **3**. In a similar manner, the image/video capture state **328** can be entered into from any other state in FIG. **3**, with the image/video capture state **328** allowing the device **100** to take one or more images via a camera and/or videos with a video capture device **240**.

Transition state **332** illustratively shows first screen **104** and the second screen **108** being closed upon one another for entry into, for example, the closed state **304**.

FIG. **3**B illustrates, with reference to the key, the inputs that are received to detect a transition from a first state to a second state. In FIG. **3**B, various combinations of states are shown with in general, a portion of the columns being directed toward a portrait state **352**, a landscape state **356**, and a portion of the rows being directed to portrait state **360** and landscape state **364**.

In FIG. **3**B, the Key indicates that "H" represents an input from one or more Hall Effect sensors, "A" represents an input from one or more accelerometers, "T" represents an input from a timer, "P" represents a communications trigger input and "I" represents an image and/or video capture request input. Thus, in the center portion **376** of the chart, an input, or combination of inputs, are shown that represent how the device **100** detects a transition from a first physical state to a second physical state.

As discussed, in the center portion of the chart **376**, the inputs that are received enable the detection of a transition from, for example, a portrait open state to a landscape easel state—shown in bold—"HAT." For this exemplary transition from the portrait open to the landscape easel state, a Hall Effect sensor ("H"), an accelerometer ("A") and a timer ("T") input may be needed. The timer input can be derived from, for example, a clock associated with the processor.

In addition to the portrait and landscape states, a docked state **368** is also shown that is triggered based on the receipt of a docking signal **372**. As discussed above and in relation to FIG. **3**, the docking signal can be triggered by the association of the device **100** with one or more other device **100***s*, accessories, peripherals, smart docks, or the like.

User Interaction:

FIGS. **4**A through **4**H depict various graphical representations of gesture inputs that may be recognized by the screens **104**, **108**. The gestures may be performed not only by a user's body part, such as a digit, but also by other devices, such as a stylus, that may be sensed by the contact sensing portion(s) of a screen **104**, **108**. In general, gestures are interpreted differently, based on where the gestures are performed (either directly on the display **110**, **114** or in the gesture capture region **120**, **124**). For example, gestures in the display **110**, **114** may be directed to a desktop or application, and gestures in the gesture capture region **120**, **124** may be interpreted as for the system.

With reference to FIGS. **4**A-**4**H, a first type of gesture, a touch gesture **420**, is substantially stationary on the screen **104**,**108** for a selected length of time. A circle **428** represents a touch or other contact type received at particular location of a contact sensing portion of the screen. The circle **428** may include a border **432**, the thickness of which indicates a length of time that the contact is held substantially stationary at the contact location. For instance, a tap **420** (or short press) has a thinner border **432***a* than the border **432***b* for a long press **424** (or for a normal press). The long press **424** may involve a contact that remains substantially stationary on the screen for longer time period than that of a tap **420**. As will be appreciated, differently defined gestures may be registered depending upon the length of time that the touch remains stationary prior to contact cessation or movement on the screen.

With reference to FIG. **4**C, a drag gesture **400** on the screen **104**,**108** is an initial contact (represented by circle **428**) with contact movement **436** in a selected direction. The initial contact **428** may remain stationary on the screen **104**,**108** for a certain amount of time represented by the border **432**. The drag gesture typically requires the user to contact an icon, window, or other displayed image at a first location followed by movement of the contact in a drag direction to a new second location desired for the selected displayed image. The contact movement need not be in a straight line but have any path of movement so long as the contact is substantially continuous from the first to the second locations.

With reference to FIG. **4**D, a flick gesture **404** on the screen **104**,**108** is an initial contact (represented by circle **428**) with truncated contact movement **436** (relative to a drag gesture) in a selected direction. In embodiments, a flick has a higher exit velocity for the last movement in the gesture compared to the drag gesture. The flick gesture can, for instance, be a finger snap following initial contact. Compared to a drag gesture, a flick gesture generally does not require continual contact with the screen **104**,**108** from the first location of a displayed image to a predetermined second location. The contacted displayed image is moved by the flick gesture in the direction of the flick gesture to the predetermined second location. Although both gestures commonly can move a displayed image from a first location to a second location, the temporal duration and distance of travel of the contact on the screen is generally less for a flick than for a drag gesture.

With reference to FIG. **4**E, a pinch gesture **408** on the screen **104**,**108** is depicted. The pinch gesture **408** may be initiated by a first contact **428** to the screen **104**,**108** by, for example, a first digit and a second contact **428***b* to the screen **104**,**108** by, for example, a second digit. The first and second contacts **428***a,b* may be detected by a common contact sensing portion of a common screen **104**,**108**, by different contact sensing portions of a common screen **104** or **108**, or by different contact sensing portions of different screens. The first contact **428***a* is held for a first amount of time, as represented by the border **432***a*, and the second contact **428***b* is held for a second amount of time, as represented by the border **432***b*. The first and second amounts of time are generally substantially the same, and the first and second contacts **428** *a, b* generally occur substantially simultaneously. The first and second contacts **428** *a, b* generally also include corresponding first and second contact movements **436** *a, b*, respectively. The first and second contact movements **436** *a, b* are generally in opposing directions. Stated another way, the first contact movement **436***a* is towards the second contact **436***b*, and the second contact movement **436***b* is towards the first contact **436***a*. More simply stated, the pinch gesture **408** may be accomplished by a user's digits touching the screen **104**,**108** in a pinching motion.

With reference to FIG. **4**F, a spread gesture **410** on the screen **104**,**108** is depicted. The spread gesture **410** may be initiated by a first contact **428***a* to the screen **104**,**108** by, for example, a first digit and a second contact **428***b* to the screen **104**,**108** by, for example, a second digit. The first and second contacts **428***a,b* may be detected by a common contact sensing portion of a common screen **104**,**108**, by different contact sensing portions of a common screen **104**,**108**, or by different contact sensing portions of different screens. The first contact **428***a* is held for a first amount of time, as represented by the border **432***a*, and the second contact **428***b* is held for a second amount of time, as represented by the border **432***b*. The first and second amounts of time are generally substantially the same, and the first and second contacts **428** *a, b* generally occur substantially simultaneously. The first and second contacts **428** *a, b* generally also include corresponding first and second contact movements **436***a, b*, respectively. The first and second contact movements **436** *a, b* are generally in a common direction. Stated another way, the first and second contact movements **436** *a, b* are away from the first and second contacts **428***a, b*. More simply stated, the spread gesture **410** may be accomplished by a user's digits touching the screen **104**,**108** in a spreading motion.

The above gestures may be combined in any manner, such as those shown by FIGS. **4**G and **4**H, to produce a determined functional result. For example, in FIG. **4**G a tap gesture **420** is combined with a drag or flick gesture **412** in a direction away from the tap gesture **420**. In FIG. **4**H, a tap gesture **420** is combined with a drag or flick gesture **412** in a direction towards the tap gesture **420**.

The functional result of receiving a gesture can vary depending on a number of factors, including a state of the device **100**, display **110**, **114**, or screen **104**, **108**, a context associated with the gesture, or sensed location of the gesture. The state of the device commonly refers to one or more of a configuration of the device **100**, a display orientation, and user and other inputs received by the device **100**. Context commonly refers to one or more of the particular application(s) selected by the gesture and the portion(s) of the application currently executing, whether the application is a single- or multi-screen application, and whether the application is a multi-screen application displaying one or more windows in one or more screens or in one or more stacks. Sensed location of the gesture commonly refers to whether the sensed set(s) of gesture location coordinates are on a touch sensitive display **110**, **114** or a gesture capture region **120**, **124**, whether the sensed set(s) of gesture location coordinates are associated with a common or different display or screen **104**,**108**, and/or what portion of the gesture capture region contains the sensed set(s) of gesture location coordinates.

A tap, when received by an a touch sensitive display **110**, **114**, can be used, for instance, to select an icon to initiate or terminate execution of a corresponding application, to maximize or minimize a window, to reorder windows in a stack, and to provide user input such as by keyboard display or other displayed image. A drag, when received by a touch sensitive display **110**, **114**, can be used, for instance, to relocate an icon or window to a desired location within a display, to reorder a stack on a display, or to span both displays (such that the selected window occupies a portion of each display simultaneously). A flick, when received by a touch sensitive display **110**, **114** or a gesture capture region **120**, **124**, can be used to relocate a window from a first display to a second display or to span both displays (such that the selected window occupies a portion of each display simultaneously). Unlike the drag gesture, however, the flick gesture is generally not used to move the displayed image to a specific user-selected location but to a default location that is not configurable by the user.

The pinch gesture, when received by a touch sensitive display **110**, **114** or a gesture capture region **120**, **124**, can be used to minimize or otherwise increase the displayed area or size of a window (typically when received entirely by a common display), to switch windows displayed at the top of the stack on each display to the top of the stack of the other display (typically when received by different displays or screens), or to display an application manager (a "pop-up window" that displays the windows in the stack). The spread gesture, when received by a touch sensitive display **110**, **114** or a gesture capture region **120**, **124**, can be used to maximize or otherwise decrease the displayed area or size of a window, to switch windows displayed at the top of the stack on each display to the top of the stack of the other display (typically when received by different displays or screens), or to display an application manager (typically when received by an off-screen gesture capture region on the same or different screens).

The combined gestures of FIG. **4**G, when received by a common display capture region in a common display or screen **104**,**108**, can be used to hold a first window stack location in a first stack constant for a display receiving the gesture while reordering a second window stack location in a second window stack to include a window in the display receiving the gesture. The combined gestures of FIG. **4**H, when received by different display capture regions in a com-

mon display or screen **104**,**108** or in different displays or screens, can be used to hold a first window stack location in a first window stack constant for a display receiving the tap part of the gesture while reordering a second window stack location in a second window stack to include a window in the display receiving the flick or drag gesture. Although specific gestures and gesture capture regions in the preceding examples have been associated with corresponding sets of functional results, it is to be appreciated that these associations can be redefined in any manner to produce differing associations between gestures and/or gesture capture regions and/or functional results.

Firmware and Software:

The memory **508** may store and the processor **504** may execute one or more software components. These components can include at least one operating system (OS) **516**, an application manager **562**, a desktop **566**, and/or one or more applications **564***a* and/or **564***b* from an application store **560**. The OS **516** can include a framework **520**, one or more frame buffers **548**, one or more drivers **512**, previously described in conjunction with FIG. **2**, and/or a kernel **518**. The OS **516** can be any software, consisting of programs and data, which manages computer hardware resources and provides common services for the execution of various applications **564**. The OS **516** can be any operating system and, at least in some embodiments, dedicated to mobile devices, including, but not limited to, Linux, ANDROID™, iPhone OS (IOS™), WINDOWS PHONE 7™, etc. The OS **516** is operable to provide functionality to the phone by executing one or more operations, as described herein.

The applications **564** can be any higher level software that executes particular functionality for the user. Applications **564** can include programs such as email clients, web browsers, texting applications, games, media players, office suites, etc. The applications **564** can be stored in an application store **560**, which may represent any memory or data storage, and the management software associated therewith, for storing the applications **564**. Once executed, the applications **564** may be run in a different area of memory **508**.

The framework **520** may be any software or data that allows the multiple tasks running on the device to interact. In embodiments, at least portions of the framework **520** and the discrete components described hereinafter may be considered part of the OS **516** or an application **564**. However, these portions will be described as part of the framework **520**, but those components are not so limited. The framework **520** can include, but is not limited to, a Multi-Display Management (MDM) module **524**, a Surface Cache module **528**, a Window Management module **532**, an Input Management module **536**, a Task Management module **540**, an Application Model Manager **542**, a Display Controller, one or more frame buffers **548**, a task stack **552**, one or more window stacks **550** (which is a logical arrangement of windows and/or desktops in a display area), and/or an event buffer **556**.

The MDM module **524** includes one or more modules that are operable to manage the display of applications or other data on the screens of the device. An embodiment of the MDM module **524** is described in conjunction with FIG. **5**B. In embodiments, the MDM module **524** receives inputs from the other OS **516** components, such as, the drivers **512**, and from the applications **564** to determine continually the state of the device **100**. The inputs assist the MDM module **524** in determining how to configure and allocate the displays according to the application's preferences and requirements, and the user's actions. Once a determination for display configurations is made, the MDM module **524** can bind the applications **564** to a display. The configuration may then be provided to one or more other components to generate a window with a display.

The Surface Cache module **528** includes any memory or storage and the software associated therewith to store or cache one or more images of windows. A series of active and/or non-active windows (or other display objects, such as, a desktop display) can be associated with each display. An active window (or other display object) is currently displayed. A non-active windows (or other display objects) were opened and, at some time, displayed but are now not displayed. To enhance the user experience, before a window transitions from an active state to an inactive state, a "screen shot" of a last generated image of the window (or other display object) can be stored. The Surface Cache module **528** may be operable to store a bitmap of the last active image of a window (or other display object) not currently displayed. Thus, the Surface Cache module **528** stores the images of non-active windows (or other display objects) in a data store.

In embodiments, the Window Management module **532** is operable to manage the windows (or other display objects) that are active or not active on each of the displays. The Window Management module **532**, based on information from the MDM module **524**, the OS **516**, or other components, determines when a window (or other display object) is visible or not active. The Window Management module **532** may then put a non-visible window (or other display object) in a "not active state" and, in conjunction with the Task Management module Task Management **540** suspends the application's operation. Further, the Window Management module **532** may assign, through collaborative interaction with the MDM module **524**, a display identifier to the window (or other display object) or manage one or more other items of data associated with the window (or other display object). The Window Management module **532** may also provide the stored information to the application **564**, the Task Management module **540**, or other components interacting with or associated with the window (or other display object). The Window Management module **532** can also associate an input task with a window based on window focus and display coordinates within the motion space.

The Input Management module **536** is operable to manage events that occur with the device. An event is any input into the window environment, for example, a user interface interactions with a user. The Input Management module **536** receives the events and logically stores the events in an event buffer **556**. Events can include such user interface interactions as a "down event," which occurs when a screen **104**, **108** receives a touch signal from a user, a "move event," which occurs when the screen **104**, **108** determines that a user's finger is moving across a screen(s), an "up event, which occurs when the screen **104**, **108** determines that the user has stopped touching the screen **104**, **108**, etc. These events are received, stored, and forwarded to other modules by the Input Management module **536**. The Input Management module **536** may also map screen inputs to a motion space which is the culmination of all physical and virtual display available on the device.

The motion space is a virtualized space that includes all touch sensitive displays **110**,**114** "tiled" together to mimic the physical dimensions of the device **100**. For example, when the device **100** is unfolded, the motion space size may be 960×800, which may be the number of pixels in the combined display area for both touch sensitive displays **110**, **114**. If a user touches on a first touch sensitive display **110** on location (40, 40), a full screen window can receive touch event with location (40, 40). If a user touches on a second touch sensitive

display **114**, with location (40, 40), the full screen window can receive touch event with location (520, 40), because the second touch sensitive display **114** is on the right side of the first touch sensitive display **110**, so the device **100** can offset the touch by the first touch sensitive display's **110** width, which is 480 pixels. When a hardware event occurs with location info from a driver **512**, the framework **520** can upscale the physical location to the motion space because the location of the event may be different based on the device orientation and state. The motion space may be as described in U.S. patent application Ser. No. 13/187,026, filed Jul. 20, 2011, entitled "Systems and Methods for Receiving Gesture Inputs Spanning Multiple Input Devices," which is hereby incorporated by reference in its entirety for all that it teaches and for all purposes.

A task can be an application and a sub-task can be an application component that provides a window with which users can interact to do something, such as dial the phone, take a photo, send an email, or view a map. Each task may be given a window in which to draw a user interface. The window typically fills a display (for example, touch sensitive display **110**,**114**), but may be smaller than the display **110**, **114** and float on top of other windows. An application usually consists of multiple sub-tasks that are loosely bound to each other. Typically, one task in an application is specified as the "main" task, which is presented to the user when launching the application for the first time. Each task can then start another task or sub-task to perform different actions.

The Task Management module **540** is operable to manage the operation of one or more applications **564** that may be executed by the device. Thus, the Task Management module **540** can receive signals to launch, suspend, terminate, etc. an application or application sub-tasks stored in the application store **560**. The Task Management module **540** may then instantiate one or more tasks or sub-tasks of the application **564** to begin operation of the application **564**. Further, the Task Management Module **540** may launch, suspend, or terminate a task or sub-task as a result of user input or as a result of a signal from a collaborating framework **520** component. The Task Management Module **540** is responsible for managing the lifecycle of applications (tasks and sub-task) from when the application is launched to when the application is terminated.

The processing of the Task Management Module **540** is facilitated by a task stack **552**, which is a logical structure associated with the Task Management Module **540**. The task stack **552** maintains the state of all tasks and sub-tasks on the device **100**. When some component of the operating system **516** requires a task or sub-task to transition in its lifecycle, the OS **516** component can notify the Task Management Module **540**. The Task Management Module **540** may then locate the task or sub-task, using identification information, in the task stack **552**, and send a signal to the task or sub-task indicating what kind of lifecycle transition the task needs to execute. Informing the task or sub-task of the transition allows the task or sub-task to prepare for the lifecycle state transition. The Task Management Module **540** can then execute the state transition for the task or sub-task. In embodiments, the state transition may entail triggering the OS kernel **518** to terminate the task when termination is required.

Further, the Task Management module **540** may suspend the application **564** based on information from the Window Management Module **532**. Suspending the application **564** may maintain application data in memory but may limit or stop the application **564** from rendering a window or user interface. Once the application becomes active again, the Task Management module **540** can again trigger the application to render its user interface. In embodiments, if a task is suspended, the task may save the task's state in case the task is terminated. In the suspended state, the application task may not receive input because the application window is not visible to the user.

The frame buffer **548** is a logical structure(s) used to render the user interface. The frame buffer **548** can be created and destroyed by the OS kernel **518**. However, the Display Controller **544** can write the image data, for the visible windows, into the frame buffer **548**. A frame buffer **548** can be associated with one screen or multiple screens. The association of a frame buffer **548** with a screen can be controlled dynamically by interaction with the OS kernel **518**. A composite display may be created by associating multiple screens with a single frame buffer **548**. Graphical data used to render an application's window user interface may then be written to the single frame buffer **548**, for the composite display, which is output to the multiple screens **104**,**108**. The Display Controller **544** can direct an application's user interface to a portion of the frame buffer **548** that is mapped to a particular display **110**,**114**, thus, displaying the user interface on only one screen **104** or **108**. The Display Controller **544** can extend the control over user interfaces to multiple applications, controlling the user interfaces for as many displays as are associated with a frame buffer **548** or a portion thereof. This approach compensates for the multiple physical screens **104**,**108** that are in use by the software component above the Display Controller **544**.

The Application Manager **562** is an application that provides a presentation layer for the window environment. Thus, the Application Manager **562** provides the graphical model for rendering by the Task Management Module **540**. Likewise, the Desktop **566** provides the presentation layer for the Application Store **560**. Thus, the desktop provides a graphical model of a surface having selectable application icons for the Applications **564** in the Application Store **560** that can be provided to the Window Management Module **556** for rendering.

Further, the framework can include an Application Model Manager (AMM) **542**. The Application Manager **562** may interface with the AMM **542**. In embodiments, the AMM **542** receives state change information from the device **100** regarding the state of applications (which are running or suspended). The AMM **542** can associate bit map images from the Surface Cache Module **528** to the tasks that are alive (running or suspended). Further, the AMM **542** can convert the logical window stack maintained in the Task Manager Module **540** to a linear ("film strip" or "deck of cards") organization that the user perceives when the using the off gesture capture area **120** to sort through the windows. Further, the AMM **542** may provide a list of executing applications to the Application Manager **562**.

An embodiment of the MDM module **524** is shown in FIG. **5**B. The MDM module **524** is operable to determine the state of the environment for the device, including, but not limited to, the orientation of the device, whether the device **100** is opened or closed, what applications **564** are executing, how the applications **564** are to be displayed, what actions the user is conducting, the tasks being displayed, etc. To configure the display, the MDM module **524** interprets these environmental factors and determines a display configuration, as described in conjunction with FIGS. **6**A-**6**J. Then, the MDM module **524** can bind the applications **564** or other device components to the displays. The configuration may then be sent to the Display Controller **544** and/or the other components within the OS **516** to generate the display. The MDM module **524** can include one or more of, but is not limited to, a Display Configuration Module **568**, a Preferences Module **572**, a

Device State Module **574**, a Gesture Module **576**, a Requirements Module **580**, an Event Module **584**, and/or a Binding Module **588**.

The Display Configuration Module **568** determines the layout for the display. In embodiments, the Display Configuration Module **568** can determine the environmental factors. The environmental factors may be received from one or more other MDM modules **524** or from other sources. The Display Configuration Module **568** can then determine from the list of factors the best configuration for the display. Some embodiments of the possible configurations and the factors associated therewith are described in conjunction with FIGS. **6**A-**6**F.

The Preferences Module **572** is operable to determine display preferences for an application **564** or other component. For example, an application can have a preference for Single or Dual displays. The Preferences Module **572** can determine an application's display preference (e.g., by inspecting the application's preference settings) and may allow the application **564** to change to a mode (e.g., single screen, dual screen, max, etc.) if the device **100** is in a state that can accommodate the preferred mode. However, some user interface policies may disallow a mode even if the mode is available. As the configuration of the device changes, the preferences may be reviewed to determine if a better display configuration can be achieved for an application **564**.

The Device State Module **574** is operable to determine or receive the state of the device. The state of the device can be as described in conjunction with FIGS. **3**A and **3**B. The state of the device can be used by the Display Configuration Module **568** to determine the configuration for the display. As such, the Device State Module **574** may receive inputs and interpret the state of the device. The state information is then provided to the Display Configuration Module **568**.

The Gesture Module **576** is shown as part of the MDM module **524**, but, in embodiments, the Gesture module **576** may be a separate Framework **520** component that is separate from the MDM module **524**. In embodiments, the Gesture Module **576** is operable to determine if the user is conducting any actions on any part of the user interface. In alternative embodiments, the Gesture Module **576** receives user interface actions from the configurable area **112**,**116** only. The Gesture Module **576** can receive touch events that occur on the configurable area **112**,**116** (or possibly other user interface areas) by way of the Input Management Module **536** and may interpret the touch events (using direction, speed, distance, duration, and various other parameters) to determine what kind of gesture the user is performing. When a gesture is interpreted, the Gesture Module **576** can initiate the processing of the gesture and, by collaborating with other Framework **520** components, can manage the required window animation. The Gesture Module **576** collaborates with the Application Model Manager **542** to collect state information with respect to which applications are running (active or paused) and the order in which applications must appear when a user gesture is performed. The Gesture Module **576** may also receive references to bitmaps (from the Surface Cache Module **528**) and live windows so that when a gesture occurs it can instruct the Display Controller **544** how to move the window (s) across the display **110**,**114**. Thus, suspended applications may appear to be running when those windows are moved across the display **110**,**114**.

Further, the Gesture Module **576** can receive task information either from the Task Manage Module **540** or the Input Management module **536**. The gestures may be as defined in conjunction with FIGS. **4**A through **4**H. For example, moving a window causes the display to render a series of display frames that illustrate the window moving. The gesture associated with such user interface interaction can be received and interpreted by the Gesture Module **576**. The information about the user gesture is then sent to the Task Management Module **540** to modify the display binding of the task.

The Requirements Module **580**, similar to the Preferences Module **572**, is operable to determine display requirements for an application **564** or other component. An application can have a set display requirement that must be observed. Some applications require a particular display orientation. For example, the application "Angry Birds" can only be displayed in landscape orientation. This type of display requirement can be determined or received, by the Requirements Module **580**. As the orientation of the device changes, the Requirements Module **580** can reassert the display requirements for the application **564**. The Display Configuration Module **568** can generate a display configuration that is in accordance with the application display requirements, as provided by the Requirements Module **580**.

The Event Module **584**, similar to the Gesture Module **576**, is operable to determine one or more events occurring with an application or other component that can affect the user interface. Thus, the Event Module **584** can receive event information either from the event buffer **556** or the Task Management module **540**. These events can change how the tasks are bound to the displays. The Event Module **584** can collect state change information from other Framework **520** components and act upon that state change information. In an example, when the phone is opened or closed or when an orientation change has occurred, a new message may be rendered in a second screen. The state change based on the event can be received and interpreted by the Event Module **584**. The information about the events then may be sent to the Display Configuration Module **568** to modify the configuration of the display.

The Binding Module **588** is operable to bind the applications **564** or the other components to the configuration determined by the Display Configuration Module **568**. A binding associates, in memory, the display configuration for each application with the display and mode of the application. Thus, the Binding Module **588** can associate an application with a display configuration for the application (e.g. landscape, portrait, multi-screen, etc.). Then, the Binding Module **588** may assign a display identifier to the display. The display identifier associated the application with a particular display of the device **100**. This binding is then stored and provided to the Display Controller **544**, the other components of the OS **516**, or other components to properly render the display. The binding is dynamic and can change or be updated based on configuration changes associated with events, gestures, state changes, application preferences or requirements, etc.

User Interface Configurations:

With reference now to FIGS. **6**A-J, various types of output configurations made possible by the device **100** will be described hereinafter.

FIGS. **6**A and **6**B depict two different output configurations of the device **100** being in a first state. Specifically, FIG. **6**A depicts the device **100** being in a closed portrait state **304** where the data is displayed on the first screen **104**. In this example, the device **100** displays data via the touch sensitive display **110** in a first portrait configuration **604**. As can be appreciated, the first portrait configuration **604** may only display a desktop or operating system home screen. Alternatively, one or more windows may be presented in a portrait orientation while the device **100** is displaying data in the first portrait configuration **604**.

FIG. **6**B depicts the device **100** still being in the closed portrait state **304**, but instead data is displayed on the second screen **108**. In this example, the device **100** displays data via the touch sensitive display **114** in a second portrait configuration **608**.

It may be possible to display similar or different data in either the first or second portrait configuration **604**, **608**. It may also be possible to transition between the first portrait configuration **604** and second portrait configuration **608** by providing the device **100** a user gesture (e.g., a double tap gesture), a menu selection, or other means. Other suitable gestures may also be employed to transition between configurations. Furthermore, it may also be possible to transition the device **100** from the first or second portrait configuration **604**, **608** to any other configuration described herein depending upon which state the device **100** is moved.

An alternative output configuration may be accommodated by the device **100** being in a second state. Specifically, FIG. **6**C depicts a third portrait configuration where data is displayed simultaneously on both the first screen **104** and the second screen **108**. The third portrait configuration may be referred to as a Dual-Portrait (PD) output configuration. In the PD output configuration, the touch sensitive display **110** of the first screen **104** depicts data in the first portrait configuration **604** while the touch sensitive display **114** of the second screen **108** depicts data in the second portrait configuration **608**. The simultaneous presentation of the first portrait configuration **604** and the second portrait configuration **608** may occur when the device **100** is in an open portrait state **320**. In this configuration, the device **100** may display one application window in one display **110** or **114**, two application windows (one in each display **110** and **114**), one application window and one desktop, or one desktop. Other configurations may be possible. It should be appreciated that it may also be possible to transition the device **100** from the simultaneous display of configurations **604**, **608** to any other configuration described herein depending upon which state the device **100** is moved. Furthermore, while in this state, an application's display preference may place the device into bilateral mode, in which both displays are active to display different windows in the same application. For example, a Camera application may display a viewfinder and controls on one side, while the other side displays a mirrored preview that can be seen by the photo subjects. Games involving simultaneous play by two players may also take advantage of bilateral mode.

FIGS. **6**D and **6**E depicts two further output configurations of the device **100** being in a third state. Specifically, FIG. **6**D depicts the device **100** being in a closed landscape state **340** where the data is displayed on the first screen **104**. In this example, the device **100** displays data via the touch sensitive display **110** in a first landscape configuration **612**. Much like the other configurations described herein, the first landscape configuration **612** may display a desktop, a home screen, one or more windows displaying application data, or the like.

FIG. **6**E depicts the device **100** still being in the closed landscape state **340**, but instead data is displayed on the second screen **108**. In this example, the device **100** displays data via the touch sensitive display **114** in a second landscape configuration **616**. It may be possible to display similar or different data in either the first or second portrait configuration **612**, **616**. It may also be possible to transition between the first landscape configuration **612** and second landscape configuration **616** by providing the device **100** with one or both of a twist and tap gesture or a flip and slide gesture. Other suitable gestures may also be employed to transition between configurations. Furthermore, it may also be possible to transition the device **100** from the first or second landscape configuration **612**, **616** to any other configuration described herein depending upon which state the device **100** is moved.

FIG. **6**F depicts a third landscape configuration where data is displayed simultaneously on both the first screen **104** and the second screen **108**. The third landscape configuration may be referred to as a Dual-Landscape (LD) output configuration. In the LD output configuration, the touch sensitive display **110** of the first screen **104** depicts data in the first landscape configuration **612** while the touch sensitive display **114** of the second screen **108** depicts data in the second landscape configuration **616**. The simultaneous presentation of the first landscape configuration **612** and the second landscape configuration **616** may occur when the device **100** is in an open landscape state **340**. It should be appreciated that it may also be possible to transition the device **100** from the simultaneous display of configurations **612**, **616** to any other configuration described herein depending upon which state the device **100** is moved.

FIGS. **6**G and **6**H depict two views of a device **100** being in yet another state. Specifically, the device **100** is depicted as being in an easel state **312**. FIG. **6**G shows that a first easel output configuration **618** may be displayed on the touch sensitive display **110**. FIG. **6**H shows that a second easel output configuration **620** may be displayed on the touch sensitive display **114**. The device **100** may be configured to depict either the first easel output configuration **618** or the second easel output configuration **620** individually. Alternatively, both the easel output configurations **618**, **620** may be presented simultaneously. In some embodiments, the easel output configurations **618**, **620** may be similar or identical to the landscape output configurations **612**, **616**. The device **100** may also be configured to display one or both of the easel output configurations **618**, **620** while in a modified easel state **316**. It should be appreciated that simultaneous utilization of the easel output configurations **618**, **620** may facilitate two-person games (e.g., Battleship®, chess, checkers, etc.), multi-user conferences where two or more users share the same device **100**, and other applications. As can be appreciated, it may also be possible to transition the device **100** from the display of one or both configurations **618**, **620** to any other configuration described herein depending upon which state the device **100** is moved.

FIG. **6**I depicts yet another output configuration that may be accommodated while the device **100** is in an open portrait state **320**. Specifically, the device **100** may be configured to present a single continuous image across both touch sensitive displays **110**, **114** in a portrait configuration referred to herein as a Portrait-Max (PMax) configuration **624**. In this configuration, data (e.g., a single image, application, window, icon, video, etc.) may be split and displayed partially on one of the touch sensitive displays while the other portion of the data is displayed on the other touch sensitive display. The Pmax configuration **624** may facilitate a larger display and/or better resolution for displaying a particular image on the device **100**. Similar to other output configurations, it may be possible to transition the device **100** from the Pmax configuration **624** to any other output configuration described herein depending upon which state the device **100** is moved.

FIG. **6**J depicts still another output configuration that may be accommodated while the device **100** is in an open landscape state **348**. Specifically, the device **100** may be configured to present a single continuous image across both touch sensitive displays **110**, **114** in a landscape configuration referred to herein as a Landscape-Max (LMax) configuration **628**. In this configuration, data (e.g., a single image, application, window, icon, video, etc.) may be split and displayed

partially on one of the touch sensitive displays while the other portion of the data is displayed on the other touch sensitive display. The Lmax configuration **628** may facilitate a larger display and/or better resolution for displaying a particular image on the device **100**. Similar to other output configurations, it may be possible to transition the device **100** from the Lmax configuration **628** to any other output configuration described herein depending upon which state the device **100** is moved.

Referring to FIG. **7**, an embodiment of a first and second housing **704** and **708** of a multi-screen device **100** is illustrated. In embodiments, the first housing **704** forms part of the first screen **104**, and the second housing **708** forms part of the second screen **108**. The housings **704** and **708** generally are configured to protect the internal components of the device **100** while minimizing the overall thickness of each of the screens **104** and **108**.

In embodiments, the first screen **704** is rotatably connected to the second screen **708**. For example, a hinge **128** may be connected to the first screen **704** so that the screen **704** is rotatable about a first axis. The hinge **128** also may be connected to the second screen **708** so that the screen **708** is rotatable about a second axis. The hinge **128** may be at least partially disposed within an opening formed in a side surface, a side, or a sidewall, of the first and second screens **704** and **708**.

Referring to FIGS. **8**A-I, an embodiment of a hinge **128** is provided. In embodiments, the hinge **128** has two distinct pivot axes. For example, the hinge **128** may include a hub **804**, a first leaf **808** rotatably connected to the hub **804** about a first pivot axis **812**, and a second leaf **816** rotatably connected to the hub **804** about a second pivot axis **820**. In embodiments, the hinge **128** has a range of motion of at least about 180 degrees so that the device is foldable between an open position in which the first and second screens **104** and **108** are juxtaposed in substantially the same plane, as shown in FIGS. **1**C-**1**F, and a closed position in which the first and second screens **108** and **108** are oriented substantially back-to-back in adjacent planes, as shown in FIGS. **1**H and **1**K-**1**M. In one embodiment, the first and second leaves **808** and **816** each may have a range of motion of at least 90 degrees between an open position and a closed position.

In embodiments, the hinge **128** is configured to minimally impact the size, or outer envelope, of the device **100**. For example, referring to FIGS. **1**C-**1**F, when the device **100** is in an open position, the hinge **128** may be substantially disposed within an outer envelope of the device **100**. Stated differently, the hinge **128** may be configured to not protrude from the front, rear, or exposed sides of the device **100**. In embodiments, when the device **100** is in the open position, the hinge **128** may be substantially flush with the rear surfaces of the first and second screens **104** and **108**. Referring now to FIGS. **1**H and **1**K-**1**M, when the device **100** is in the closed position, the hinge **128** may be substantially disposed within an outer envelope of the device **100**. Stated differently, the hinge **128** may be configured to not protrude from the front or exposed sides of the device **100**. In embodiments, when the device **100** is in the closed position, the hinge **128** may be substantially flush with the side surfaces **188***d* of the first and second screens **104** and **108**.

Referring back to FIGS. **8**A-I, the hub **804** may be configured to allow the electrical coupling of the first and second screens **104** and **108**. For example, in embodiments the hub **804** is elongate and extends between a first end **824** and a second end **828**. The hub **804** may include at least one internal passage **832** positioned between the first and second ends **824** and **828**. The at least one internal passage **832** may extend transverse to the first and/or second pivot axes **812** and **820**. In one embodiment, the hub **804** includes two internal passages **832***a, b*. The at least one internal passage **832** may be configured to accommodate at least one electrical wire through the hub **804**. In one embodiment, an electrical ribbon or flexible circuit may pass through the at least one internal passage **832** to electrically couple the first and second screens **104** and **108**. In alternative embodiments, a plurality of shorter hubs **804** may be utilized. For example, in one embodiment, two hubs **804**, each containing a single internal passage **832**, may be utilized. Referring to FIG. **9**, one embodiment of a flexible circuit **904** is shown passing through an internal passage **832** of the hinge **128** to electrically couple the first and second screens **104** and **108**.

Referring back to FIGS. **8**A-I, the leaves **808** and **816** may be rotatably connected to the ends **824** and **828** of the hub **804**. For example, in one embodiment, each end **824** and **828** of the hub **804** includes holes **836** having centerlines generally corresponding to the first and second pivot axes **812** and **820**. A pin may be associated with the holes **836** to connect the leaves **808** and **816** to the hub **804**. In alternative embodiments, the hub **804** may include integrally formed protrusions or rods extending from the ends **824** and **828** and configured for connection to holes formed in the leaves **808** and **816**.

The leaves **808** and **816** may each be formed as a single component that connects to both ends **824** and **828** of the hub **804**, as depicted in FIGS. **8**A-I. In this embodiment, a middle portion of each of the leaves **808** and **816** may include a void configured not to interfere with electrical components, such as wires, passing through the hub **804**, especially during rotation of the device **100** between an open and closed position. The leaves **808** and **816** also may each include an open flange **840** and a closed flange **844**. In one embodiment, the open flanges **840** are substantially parallel to the closed flanges **844** but extend in opposite directions relative to a base **848** of each leaf **808** and **816**. In operation, the first and second leaves **808** and **816** may be rotatable about opposing sides of the hub **804**. For example, in one embodiment the hub **804** has a substantially flat front and rear surfaces **852** and **856** connected to each other by opposing side surfaces **860**, which may be substantially semi-circular. In this embodiment, the leaves **808** and **816** may each have a substantially semi-circular inner surface positioned adjacent to one of the opposing side surfaces **860** of the hub **804**. During rotation of the leaves **808** and **816** between an open and closed position, the leaves **808** and **816** may rotate about the pivot axes **812** and **820** around the side surfaces **860** of the hub **804**.

When the device **100** is in an open position, the open flanges **840** of the leaves **808** and **816** may be substantially parallel to one another and substantially abut each other to prevent further rotation of the screens **104** and **108**. In one embodiment, the hinge **128** is configured so that the screens **104** and **108** are rotatable beyond a planar configuration. In this embodiment, the hinge **128** is configured to permit the screens **104** and **108** to rotate slightly beyond planar so that an inner edge of each screen **104** and **108** disposed on a front surface of the respective screen can be positioned adjacent to the opposing screen edge in a substantially abutting relationship to close any gap existing between the screens **104** and **108** when positioned in a planar configuration.

This configuration is shown in FIGS. **16** and **17**. As shown in FIG. **17**, planes of the front surfaces **102** of the first and second screens **104** and **108** are substantially transverse, or non-parallel, to one another and each forms an angle δ with a substantially horizontal plane **1600** typically of no more than about 10°, more typically of no more than about 5°, more typically of no more than about 1.0°, and even more typically

of no more than about 0.5°. The over-rotation or over-travel of the hinge **128** enables, with reference to FIG. **17**, an inter-housing distance "D" between adjacent front facing interior edges of the first and second housings **704** and **708** (and/or between the first and second touch screen displays **110** and **114** and/or between the first and second screens **104** and **108**) proximal to the hinge **128** typically of no more than about 10 mm, even more typically of no more than about 5 mm, even more typically of no more than about 1 mm, more typically of no more than about 0.5 mm, and even more typically of no more than about 0.25 mm. In this way, there is substantially no visible inter-screen gap or seam "D" spanning the device length "L" between the first and second screens **104** and **108** (FIG. **1**E) when the device **100** is in the fully open position. A longitudinal gap "G", however, extends the length of the device between the rear surfaces **184**, with the width of the gap "G" being larger than a width of the distance "D".

In one configuration, an active information display area in each of the first and second screens **104** and **108** is substantially continuous, or uninterrupted, over the inter-screen border or boundary. With reference to FIG. **18**, the thatched area indicates the portions of the first and second screens **104** and **108** that provide displayed images, such as video and/or other graphical information, to the user. The black inter-display seam **1800** between the first and second screens **104** and **108** is substantially invisible to the viewer, in large part due to the small distance "D".

When the device **100** is in a closed position, the closed flanges **844** of the leaves **808** and **816** may be substantially coplanar in an abutting relationship with a front surface **852** of the hub **804**. In this configuration, a rear surface **856** of the hub **804** may be exposed. In an alternative embodiment, the first and second leaves **808** and **816** may be separated into multiple components, each of which is associated with only one end **824** or **828** of the hub **804**.

The hinge **128** can be compact and incorporated into the body of the device **100**, thereby substantially minimizing the inter-screen gap or seam between the juxtaposed screens. The hinge, as noted, can allow over-travel, or rotation beyond 180 degrees. The hinge over-travel can allow the first and second screens **104** and **108** to touch or contact physically when the device **100** is fully opened, thereby essentially eliminating any gap or seam between the first and second screens **104** and **108**.

As will be appreciated, other appropriately configured hinge configurations having one or multiple pivot axes may be employed that can also provide similar gap or seam minimization. Internal or external hinges can equally provide inter-display seam minimization. Bulkier hinges (resulting in a larger gap between the first and second screens **104** and **108**) with more hinge over-travel (to compensate for the larger inter-screen gap) can be used, for example. Examples of suitable hinges include barrel hinge, pivot hinge, butt/mortise hinge, case hinge, continuous or piano hinge, concealed hinge, butterfly hinge, flag hinge, strap hinge, H hinge, HL hinge, counterflap hinge, flush hinge, coach hinge, rising butt hinge, double action spring hinge, Tee hinge, fraction hinge, security hinge, cranked hinge, lift-off hinge, self-closing hinge, butt hinge, butler tray hinge, card table hinge, and drop leaf table hinge.

Referring now to FIGS. **10** and **12**, each housing **704** and **708** may include an opening **752** formed in a side surface or sidewall **736**. When the device **100** is in the open position, the opening **752** formed in each housing **704** and **708** may substantially oppose each other, as shown in FIG. **7**. Each opening **752** may be configured to accommodate at least a portion of the hinge **128**. For example, in one embodiment the hinge **128** is at least partially positioned within the opening **752** of the first and second housings **704** and **708**. In one specific example, the first leaf **808** may be substantially positioned within the first housing **704** and the second leaf **816** may be substantially positioned within the second housing **708**. In this embodiment, the hub **804** may be the only component of the hinge **128** that extends between the screens **104** and **108**. By connecting the first leaf **808** to the first housing **704** and the second leaf **816** to the second housing **708**, the first screen **104** may be rotatable about the first axis **812** and the second screen **108** may be rotatable about the second axis **820**.

Referring to FIGS. **7** and **9**, in embodiments each housing **704** and **708** includes an outer shell **712** and **716** and a polymeric portion **720** and **724**, respectively. The outer shells **712** and **716** may provide a durable case for the device **100**. The polymeric portions **720** and **724** may provide rigidity to selective locations of the outer shell **712** and **716**, respectively. In one embodiment, each outer shell **712** and **716** is metallic.

In embodiments, the outer shell **712** and **716** includes a base **728** and **732** and a sidewall **736** and **740**, respectively. The base **728** and **732** may be formed in different shapes and/or curvatures. In one embodiment, the base **728** and **732** of each housing is substantially flat and provides a rear surface datum for the internal components of the device **100**. The sidewall **736** and **740** may connect to a periphery of the base **728** and **732**, respectively. In one embodiment, the base and sidewall of each housing **704** and **708** are integrally formed from a single component, such as sheet metal.

In embodiments, the outer shell **712** and **716** of each housing **704** and **708** includes an inner surface and an outer surface. The inner surface generally faces the interior of the device **100**, and the outer surface generally faces the exterior of the device **100**. In embodiments, the polymeric portion **720** and **724** is overmolded on the inner surface of the outer shell **712** and **716**, respectively, in selective locations to provide rigidity to predetermined areas of the outer shell. In the depicted example, the polymeric portion **720** and **724** of each housing **704** and **708** is overmolded on opposite end portions of the base **728** and **732**, respectively. Also depicted, the polymeric portion **720** and **724** may be overmolded on the inner surface of the sidewall **736** and **740**, respectively.

In embodiments, the polymeric portion **720** and **724** is nanomolded on the outer shell **712** and **716** of the housings **704** and **708**, respectively. In one embodiment, selective locations of the outer shell **712** and **716** of each housing **704** and **708** is etched with a chemical, and then the polymeric portion **720** and **724** is overmolded on the etched metallic outer shell to provide a strong, resilient bond between the polymeric portions and outer shells. In this fashion, the polymeric portions **720** and **724** can be selectively connected to the outer shell **712** and **716** of the housings **704** and **708**, respectively, to provide rigidity to the housings **704** and **708** and enable the housings **704** and **708** to utilize a thin back **728** and **732**, thereby reducing the overall thickness of the first and second screens **104** and **108**.

The thickness of the outer shell **712** and **716** of each housing **704** and **708** may be selectively dimensioned to reduce the weight and thickness of the device **100**. In embodiments, the thickness of the outer shell **712** and **716** of each housing **704** and **708** is less than about 10 millimeters, preferably less than about 5 millimeters, and more preferably less than about 3 millimeters. In one embodiment, the thickness of the metallic outer shell **712** and **716** of each housing **704** and **708** is about 3 millimeters. In this embodiment, the outer shell **712** and **716** may be undesirably deformable in certain locations. As discussed above, a polymeric portion **720** and **724** may be molded to the outer shell **712** and **716** to provide rigidity to

selective locations of the outer shell. In addition, as discussed below, other components may be connected to the outer shell **712** and **716** in selective locations to provide rigidity to the outer shell **712** and **716**.

The outer shells **712** and **716** and the polymeric portions **720** and **724** may comprise materials commonly utilized in the art. In embodiments, the outer shells **712** and **716** is metallic and may comprise any metal or alloy known in the art. In one embodiment, the outer shell **712** and **716** of each housing **704** and **708** comprises a **304** stainless steel, ¾ hardened. In embodiments, the polymeric portions **720** and **724** comprise any polymeric material known in the art, including thermoplastic and/or thermosetting polymers. In one embodiment, the polymeric portion **720** and **724** of each housing **704** and **708** comprises a polyphenol plastic.

With reference to FIG. **10**, an embodiment of a first housing **704** is provided. The first housing **704** includes a metallic outer shell **712** and a polymeric portion **720** molded to an inner surface of the outer shell **712**. The outer shell **712** includes a substantially flat base **728** and a sidewall **736** integrally connected to a periphery of the base **728**. The base **728** has a top portion **728***a* (covered by the polymeric portion), a bottom portion **728***b* (covered by the polymeric portion), and a middle portion **728***c* interposed between the top and bottom portions **728***a* and **728***b*. The middle portion **728***c* is exposed, i.e., not covered by the polymeric portion **720**, in the depicted example and generally is dimensioned to accommodate a battery for powering the device **100**. Accordingly, in this embodiment, the thickness of the outer shell **712** in the area corresponding to the battery can be minimized, thereby reducing the overall thickness of the device **100**. Additionally, in this embodiment, the battery and other stacked components may provide rigidity to at least a portion of the exposed middle portion **728***c* of the base **728**.

In embodiments, the first housing **704** can include components selectively positioned and connected to the base **728** to provide additional rigidity to predetermined locations and/or features of the device **100**. For example, in the depicted embodiment, a screw boss **1004**, an L-shaped bracket **1008**, a hinge block **1012**, and a hinge reinforcement strip **1016** are connected to the base **728**. The listed components can be connected to the housing **704** using any connection device and/or method known in the art, including laser welding.

In embodiments, the first housing **704** may include at least one screw boss **1004**. The screw boss **1004** may be configured to connect a backing plate **1100**, shown in FIGS. **11***a-c*, to the housing **704**. In addition, the screw boss **1004** may be configured to selectively position the backing plate **1100** within the housing **704** relative to the base **728** and/or the sidewall **736**. For example, the screw boss **1004** may be configured to position the backing plate **1100** a predetermined distance above the base **728** and/or in a predetermined orientation relative to the base **728**. In one embodiment, the screw boss **1004** is configured to orient the backing plate **1100** in a substantially perpendicular orientation relative to the base **728**. The screw boss **1004** also may be positioned a predetermined distance from the sidewall **736** to selectively locate the backing plate **1100** relative to the sidewall **736** for providing rigidity to at least one button and/or defining a datum for positioning at least one component, such as a battery, within the housing **704**. In the depicted example, the first housing **704** includes two screw bosses **1004***a, b* connected to the base **728** proximate to the sidewall **736**. The example screw bosses **1004***a, b* are spaced apart from each other by a predetermined distance so as to not interfere with the operation of the buttons **152** and **154**, shown in FIG. **1**L, associated with the ports **744** and **748**. In addition, the example screw bosses **1004**, b each include a threaded aperture. In embodiments, a backing plate **1100** may be connected to the at least one screw boss **1004** with a threaded fastener configured to threadably engage the threaded aperture of the at least one screw boss **1004**.

Referring to FIGS. **11**A-C, one embodiment of a backing plate **1100** is provided. The example backing plate **1100** is configured to connect to the housing **704** to provide rigidity to a button and/or to define a datum for positioning a component, such as a battery, within the housing **704**. The depicted backing plate **1100** includes two apertures **1104***a, b* spaced apart a predetermined distance to correspond to the threaded apertures of the screw bosses **804***a, b*. The example backing plate **1100** also includes a front edge **1108**, a rear edge **1112**, a top edge **1116**, and a bottom edge **1120**. When connected to the housing **704**, the front edge **1108** of the backing plate **1100** may be positioned a predetermined height above the base **728**, and the rear edge **1112** may be positioned adjacent to the base **728**. In one embodiment, the front edge **1108** of the backing plate **1100** may be positioned below a shelf formed on a sidewall **736** of the housing **704**. In addition, when connected to the housing **704**, the top edge **1116** may be positioned proximate to a top side of the device **100**. The backing plate **1100** may be positioned adjacent to a portion of the sidewall **738** having ports **744** and **748**.

The backing plate **1100** may be configured to accommodate other components within the housing **704**. For example, the example backing plate **1100** includes two recessed areas **1124***a, b* formed in the rear edge **1112** of the backing plate **1100** and disposed substantially below the apertures **1104***a, b*, respectively. The depicted recessed areas **1124***a, b* are configured to accommodate a base portion of the screw bosses **1004***a, b*, which may be connected to the base **728** of the first housing **704**. In addition, the front edge **1108** of the backing plate **1100** may include several recessed areas as well. For example, proximate to the top edge **1116** of the backing plate **1100**, the front edge **1108** of the example backing plate **1100** includes two recessed areas **1128***a, b* spaced apart from each other by a predetermined distance to define a raised portion **1132** interposed between the recessed areas **1128***a, b*. When the backing plate **1100** is connected to the first housing **704**, the raised portion **1132** may be configured to provide rigidity to the rocker button **154**, shown in FIG. **1**L. In addition, the recessed areas **1128***a, b* may be configured to accommodate depression of opposing sides of the rocker button **154**, which may correspond to a volume rocker button with a volume up and a volume down side. The example backing plate **1100** also includes a raised portion **1136** extending substantially between the recessed area **1128***b* and the aperture **1104***b*. The raised portion **1136** may be configured to provide rigidity to the button **152**, which is shown in FIG. **1**E.

The backing plate **900** also may be configured to provide support for a flexible circuit. In embodiments, a flexible printed circuit is placed on the middle portion **728***c* of the first housing **704** beneath a battery. To ground the flexible printed circuit to a printed circuit board, at least a portion of the flexible printed circuit may be routable from beneath the battery to a position on a front side of the battery. For example, the example backing plate **1100** may include an elongate recessed area **1140** extending between the raised portion **1136** and the bottom edge **1120** of the backing plate **1100**. The elongate recessed area **1140** may be configured to allow a flexible circuit to be bent over the front and/or rear edge **1108** and **1112** of the recessed area **1140**. For example, in embodiments, the rear edge **1112** corresponding to the recessed area **1140** may be selectively positioned relative to the base **728** to define a predefined gap between the rear edge

1112 of the backing plate **1100** and the base **728**. The predefined gap may be dimensioned to accommodate a thickness of a flexible circuit, and in at least one embodiment the rear edge **1112** of the backing plate **1100** may substantially clamp the flexible circuit to the base **728**. In addition, the front edge **1108** associated with the recessed area **1140** may provide a path for positioning the flexible circuit. The distance between the sidewall **736** and the bottom portion of the backing plate **1100** associated with the recessed area **1140** may be dimensioned to accommodate a predetermined bending radius of the flexible circuit. In this configuration, the rear edge **1112** of the backing plate **1100** may secure the flexible printed circuit in a predetermined position beneath the battery while the front and rear edges **1108** and **1112** may provide a reference for the flexible printed circuit to be bent around to ensure a proper bend radius.

Referring back to FIG. **10**, the first housing **704** may include two L-shaped brackets **1008***a, b* connected to the base **728** proximate to the sidewall **736**. More specifically, the L-shaped brackets **1008***a, b* may be connected to the base **728** proximate to a side of the sidewall **736** that includes ports **744** and **748** which may be configured to accommodate a button **152** and a rocker button **154**. The L-shaped brackets **1008***a, b* may be configured to provide rigidity to the top and bottom portions of the backing plate **1100** associated with the top and bottom ends **1116** and **1120**. The L-shaped brackets **1008***a, b* may be connected to the backing plate **1100**. In one embodiment, the L-shaped brackets **1008***a, b* are dimensioned to extend above the base **728** a predetermined distance so that a front edge of the L-shaped brackets **1008***a, b* is substantially flush with the front edge **1108** of the backing plate **1100**.

When connected to the base **728** of the first housing **704**, the backing plate **1100** and/or L-shaped brackets **1004***a, b* may define a datum configured to position a battery on the middle portion **728***c* of the base and/or provide rigidity to buttons **152** and **154** associated with the sidewall **736**. For example, in embodiments the backing plate **1100** is configured to maintain consistent button behavior for the buttons associated with the sidewall **736**, and, if a rocker button is included, the backing plate **1100** can provide fields for the rocker button, such as up, down, and/or mute. In addition, the configuration of the backing plate **1100**, the L-shaped brackets **1008***a, b*, and/or the screw bosses **1004***a, b* may minimize space usage within the first housing **704**, which may result in a first housing **704** with a reduced outer envelope.

Still referring to FIG. **10**, the example first housing **704** includes two hinge blocks **1012***a, b* connected to the base **728** and the sidewall **736**. In the depicted example, the hinge blocks **1012***a, b* are positioned adjacent to opposing ends of an elongate opening **752** formed in one side of the sidewall **736**. The elongate opening **752** is configured to accommodate at least a portion of a hinge **128**. The hinge blocks **1012***a, b* may each include threaded holes configured to engage a fastener and secure the hinge **128** to the first housing **704**. Between the hinge blocks **1012***a, b* and near a middle portion of the elongate opening **752**, a reinforcement strip **1016** can be connected to the base **728** to reinforce the base **728** near the opening **752** and to contact a body of the hinge **128** adjacent the internal passages **832***a,b*. The steps **870** in the hinge **128** body engage the opposing ends **1040** of the reinforcement strip **1016**.

The backing plate **1100**, the screw bosses **1004***a, b*, the L-shaped brackets **1008***a, b*, hinge blocks **1012***a, b*, and the hinge reinforcement strip **1016** may comprise materials commonly utilized in the art, including metallic and/or non-metallic materials. In embodiments, the backing plate **1100** comprises 304 stainless steel, ¾ hardened, with a thickness of approximately 0.4 millimeters. In embodiments, the screw bosses **1004***a, b* comprise 304 stainless steel, ¾ hardened. In embodiments, the L-shaped brackets **1008***a, b* comprise 304 stainless steel, ¾ hardened, with a thickness of approximately 0.3 millimeters. In embodiments, the hinge blocks **1012***a, b* comprise 316 stainless steel. In embodiments, the hinge reinforcement strip **1016** comprises 304 stainless steel, ¾ hardened.

With reference to FIG. **12**, an embodiment of a second housing **708** is provided. Similar to the first housing **704**, the second housing **708** includes an outer shell **716** and a polymeric portion **724** molded to an inner surface of the outer shell **716**. The outer shell **716** includes a substantially flat base **732** and a sidewall **740** connected to a periphery of the base **732**. The base **732** has a top portion **732***a* (covered by the polymeric portion), a bottom portion **732***b* (covered by the polymeric portion), and a middle portion **732***c* interposed between the top and bottom portions **732***a* and **732***b*. The middle portion **732***c* is exposed, i.e., not covered by the polymeric portion **724**, in the depicted example and may be dimensioned to accommodate a printed circuit board. In embodiments, the polymeric portions **720** and **724** and/or other components may be configured to ensure the backs **728** and **732** of the shells **712** and **716** retain a predefined flatness and resist deformation, such as torsional and/or bending.

The polymeric portions **720** and **724** may be configured to include additional features. For example, bosses may be formed in the polymeric portions **720** and **724**. The bosses may be configured to engage other components, and in one embodiment the bosses include threaded inserts configured to threadably engage other components associated with the device **100**. The example polymeric portions **720** and **724** each include four bosses, two of which correspond to the top portions **728***a* and **732***a* of the bases **728** and **732**, and two of which correspond to the bottom portions **728***b* and **732***b* of the bases **728** and **732**. In addition to the bosses, the polymeric portions **720** and **724** may include a shelf **756** and **760** extending inward from the sidewall **736** and **740** of the outer shell **712** and **716**, respectively. The shelves **756** and **760** may be configured to connect to a display of the first and second screens **104** and **108**.

In embodiments, the second housing **708** can include components selectively positioned and connected to the base **732** to provide additional rigidity to predetermined locations and/or features of the device **100**. For example, in the embodiment depicted in FIG. **12**, a corrugated stiffener **1204**, a boss **1208***a, b*, a load distribution plate **1212**, a hinge block **1012***a, b*, and a hinge reinforcement strip **1016** are connected to the base **732**. The listed components can be connected to the housing **708** using any connection device and/or method known in the art, including laser welding.

The corrugated stiffener **1204** depicted in FIG. **12** is positioned proximate to the sidewall **740** and configured to provide rigidity to the second housing **708** proximate to a card slot **132** formed in the sidewall **740**. The corrugated stiffener **1204** includes a series of ridges **1216** and troughs **1220**. The ridges **1216** and troughs **1220** may be substantially parallel to one another. In addition, the ridges **1216** and troughs **1220** may be substantially parallel to a side of the sidewall **740** that includes a card slot **132**. The corrugated stiffener **1204** may comprise materials commonly utilized in the art, including metallic and/or non-metallic materials. In one embodiment, the corrugated stiffener **1204** comprises 304 stainless steel, ¾ hardness.

With reference to FIGS. **13**A-C, an embodiment of the corrugated stiffener **1204** is provided. The example stiffener **1204** includes a series of parallel ridges **1216** and troughs

1220. In particular, the example stiffener **1204** includes 3 substantially parallel ridges **1216** and **4** substantially parallel troughs **1220**. In embodiments, the series of ridges **1216** may have an uppermost portion that extends above an uppermost portion of the troughs **1220** by between about 5% and 95% of the thickness of the troughs **1220**, preferably between about 25% and 75% of the thickness of the troughs **1220**, more preferably between about 40% and 60% of the thickness of the troughs **1220**, and even more preferably about 50% of the thickness of the troughs **1220**. For example, in one embodiment, the series of troughs **1220** each have a thickness of about 0.3 millimeters, and an uppermost portion of each ridge **1216** extends above an uppermost portion of each trough **1220** by a distance of about 0.15 millimeters. In embodiments, the pitch, or the distance between the uppermost portions of the series of ridges **1216**, is between about 2 millimeters and about 5 millimeters, preferably between about 3 millimeters and about 4 millimeters, and more preferably about 3.5 millimeters. In embodiments, the width of each ridge **1216** is between about 1 millimeter and about 3 millimeters, and preferably about 2 millimeters. In embodiments, the width of each trough **1220** is between about 0.5 millimeter and about 2.5 millimeters, and preferably about 1.5 millimeters. A trough **1220** may include an aperture, which may be utilized to position the corrugated stiffener **1204** relative to the sidewall **740**.

The plurality of ridges **1216** and troughs **1220** may comprise various shapes. For example, in one embodiment, each ridge **1216** is arcuate and may be semi-circular. In one embodiment, each trough **1220** is substantially flat. In one embodiment, the uppermost portion of the series of ridges **1216** are coplanar and the uppermost portion of the troughs **1220** are coplanar.

The housing **708** may include at least one boss **1208** configured to connect a retainer bracket to the housing **708**. Referring to the example housing depicted in FIG. **12**, two bosses **1208** are selectively positioned and connected to the base **732** of the second housing **708**. In embodiments, the bosses **1208** are spaced apart from each other by a predetermined distance so as to not interfere with a port **136** or devices associated with the port **136**. In embodiments, the bosses **1208** are positioned apart from each other by a distance about equal to the width of the port **136**. The example bosses **1208** are internally threaded and extend above the base **732** by a predetermined distance. For example, the bosses **1208** may extend above the base **732** by a distance approximately equal to a height of a printed circuit board. A load distribution plate **1212** may be positioned between the bosses **1208** and the base **732** to distribute any load transferred to the bosses **1208** to a larger area of the base **732** of the housing **708**, thereby reducing localized deformation of the base **732**. In embodiments, the load distribution plate **1212** is substantially rectangular. In embodiments, the load distribution plate **1212** can be formed from metallic and/or non-metallic materials. In one embodiment, the load distribution plate **1212** is formed from sheet metal.

Referring to FIG. **14**, an embodiment of a second housing **708** with internal components is provided. Particularly, an input/output (I/O) connector retainer bracket **1404** is positioned adjacent a port **136** that is formed in a sidewall **740** of the second housing **708**. The retainer bracket **1404** is removably connected to the bosses **1208***a, b* with fasteners **1408***a, b*, respectively. The bosses **1208***a, b* may be positioned within cutouts of the printed circuit board. Thus, in one embodiment, the I/O connector retainer bracket **1404** is connected to the second housing **708** and does not connect to the printed circuit board.

In embodiments, the retainer bracket **1404** comprises a frame **1416** that defines an interior space configured to receive a dock connector, which in turn is configured to connect to a peripheral device. In embodiments, the frame **1416** is configured to secure the dock connector, which may be a female receptacle, between the frame **1416**, the base **732**, and the sidewall **740**. In one embodiment, the frame **1416** is configured to at least partially enclose, or house, a dock connector. The frame **1416** may be configured to provide rigidity to the dock connector based at least in part on the connection of the frame **1416** to the housing **708**. In addition, the dock connector may be movable relative to the frame. For example, in one embodiment, the frame **1416** may be configured to allow the dock connector to substantially float within an interior space of the frame **1416** to accommodate misalignments and/or other peripheral device connection issues. In one embodiment, a deformable material, such as a pressure sensitive adhesive, may be utilized to connect the dock connector to the frame **1416** while enabling the dock connector to move relative to the frame. In one embodiment, the dock connector is not connected to the frame **1416**.

With reference to FIGS. **15**A-D, an embodiment of an I/O connector retainer bracket **1404** is provided. The example retainer bracket **1404** comprises a frame **1416** having a top plate **1420** and opposing side plates **1424**, which collectively may define an interior space **1428** of the frame **1416**. As discussed previously, the frame **1416** may be configured to at least partially enclose a dock connector. Referring to FIGS. **15**A-F, a dock connector may be at least partially positioned within the interior space **1428** of the frame **1416**, and the top plate **1420** and opposing side plates **1424** may be configured to at least partially wrap around the dock connector. The dock connector may be connected to the frame **1416**, and particularly to the top plate **1420** and/or the opposing side plates **1424**, by various connection methods utilized in computing devices. For example, in one embodiment, a pressure sensitive adhesive may be utilized to connect the dock connector to the frame **1416**. In some embodiments, the dock connector is not connected to the frame **1416**. In these embodiments, the frame **1416** wraps around a top and side portion of the dock connector to substantially secure the dock connector between the frame **1416**, the base **728** of the housing **708**, and the sidewall **740** of the housing **708**. The dock connector may be configured to be electrically coupled to a printed and/or flexible circuit board. In embodiments, the dock connector is a female receptacle configured to receive a male connector attached to a peripheral device.

The frame **1416** may include a connection plate configured to connect the frame **1416** to the housing **708**. The example frame **1416** depicted in FIGS. **15***a-f* includes a connection plate **1432** having a plurality of apertures **1436***a, b* selectively positioned in the frame to geometrically align with the bosses **1208***a, b*. Thus, when the frame **1416** is positioned within the housing **708** adjacent to the port **136**, the apertures **1436***a, b* align with the bosses **1208***a, b* for connecting the frame **1416** to the housing **708**, and particularly to the base **732** of the housing **708**. The connection plate **1432** may be substantially planar, as depicted in FIGS. **15**A-D. In addition, the connection plate **1432** may be configured to contact an upper surface of the printed circuit board.

A substantial portion of the frame **1416** may be cantilevered between an edge of a printed circuit board and the sidewall **740** of the housing **708**. In one embodiment, the frame **1416** includes a front edge **1440** configured to substantially abut an interior portion of the sidewall **740** of the housing **708**, particularly an area of the sidewall **740** surrounding the port **136**. As depicted in FIG. **14**, the front edge **1440** of the

frame **1416** is positioned in abutting relationship to the sidewall **740** of the housing **708**. The I/O connector retainer bracket **1404** may comprise materials commonly utilized in the art, including metallic and/or non-metallic materials. In embodiments, the retainer bracket **1404** comprises a plastic material. In one embodiment, the retainer bracket **1404** comprises acrylonitrile butadiene styrene (ABS).

Referring back to FIG. **12**, the example second housing **708** includes two hinge blocks **1012***a, b* and a hinge reinforcement strip **1016**, all of which may be connected to the base **732**. In the depicted example, the hinge blocks **1012***a, b* are positioned adjacent to opposing ends of an elongate opening **752** that is formed in one side of the sidewall **740**. The elongate opening **752** may be configured to accommodate at least a portion of a hinge **128**. The hinge blocks **1012***a, b* may each include threaded holes configured to engage a fastener and secure the hinge **128** to the second housing **708**. Between the hinge blocks **1012***a, b* and near a middle portion of the elongate opening **752**, a reinforcement strip **1016** can be connected to the base **728** to reinforce the base **728** near the opening **752**.

FIGS. **19** and **20**A-H and J-N are various views depicting a flexible electrically conductive member **1900** for electrically interconnecting an energy storage device, particularly a battery, with a printed circuit board to power the computational, processing, and display functions of the device **100**. FIG. **19** depicts the member **1900** as configured when installed in the device **100**. As will be appreciated, prior to installation the member **1900** is substantially planar and is folded into the depicted configuration during device assembly. Referring to FIG. **19**, the member **1900** includes plural first conductive pads **1904***a-d* on a first surface of the member **1900** to contact conductive pads on a printed circuit board (not shown), plural second conductive pads **2004***j* and *k* (FIGS. **20**J-K) to contact terminals of the energy storage device, an elongated passage **1908** for a flexible circuit (not shown) to the display (not shown), and plural tabs shown in FIGS. **20**A-H and J-N for engaging selected features in the respective one of the first and second housings **704** and **708**. FIGS. **20**A-H and L-N depict various tab **2000***a-h* and **1**-*n* configurations, respectively, used for locating the member **1900** in the device **100** relative to other components and/or electrically contacting selected components to the energy storage device. Tabs **2000***a, c, d, e, f, g, l, m* and n include conductive pads **2004** *a, c, d, e, f, g, l, m*, and n, respectively. Referring to FIGS. **20**J-K, the tabs fold around the energy storage device, which typically is a rectangular-shaped battery, such that the energy storage device is received in the enclosed area **2008** and **2012** (for FIGS. **20**J-K, respectively) to enable the contact pads **2004***j-k* to contact terminals of the energy storage device, which battery terminals are located on an opposing side of the energy storage device from the side of the energy storage device contacting the central portion **2016** of the member **1900**. Tabs **2000***o* and *p* pass under and engage the reinforcement strip **1016**.

FIGS. **21**A-B, **22**A-H, and **23-24** are various views depicting a substantially planar display frame **2100** that engages a rear surface of the display panel **2108** to provide structural support to the display panel and mechanically hold and retain the display panel in position. As will be appreciated, the display panel **2108** faces outwardly and the display frame **2100** inwardly relative to the respective one of the first and second housing. The display frame **2100** includes various features, including first, second, and third tabs **2104** *a,b,c* and lip **2116** to engage and mechanically interlock with a matching slot in a peripheral edge of the respective one of the first and second housings **704** and **708**, score marks **2112** to locate a flexible circuit (not shown) from the printed circuit board (not shown) to the display **2108** and a cutout **2108** to pass a flexible printed circuit, thereby enabling the flexible circuit to bend to connect to the display panel. The display frame design can provide for mechanical retention of the display without external screws or clips increasing the outer dimensions of the housing. Additionally, the design can be substantially free of adhesives between the display panel and display frame and thereby avoiding the display frame from separating from the display panel, due to failure of the adhesive. The display frame **2100** is typically made from a non-magnetic material, such as stainless steel, to provide an electromagnetic shield or barrier, thereby preventing or inhibiting substantially all of the electromagnetic radiation from the electrical components in the printed circuit board and other electrical components positioned on a first side of the display frame from passing through the display frame **2100** and impacting adversely the operation of the display panel **2108** positioned on a second side of the display frame.

FIGS. **25-27** depict a flexible circuit connector securing assembly **2500**. The securing assembly **2500** includes a bracket **2504** and resilient gasket **2508**, located between the bracket **2504** and a connector **2514** on the printed circuit board **2516**, to apply pressure, typically of at least about 50 psi, more typically of at least about 100 psi, and even more typically of at least about 150 psi but typically no more than about psi, to a flexible circuit **2512**, thereby maintaining the electrical connection with the connector **2514**, typically for greater than 100,000 cycles. The securing assembly **2500** uses screws **2530**, passing through the printed circuit board **2516**, to mount the securing assembly **2500** to the corresponding one of the first and second housing **704** and **708** and to apply the pressure to the flexible circuit.

FIGS. **24**, **28**A-D, and **29**A-B depict substantially transparent light guides and a substantially opaque light guide support bracket for illuminating the areas **112***a-c* (FIG. **1**A). As can be seen in FIGS. **29**A-B, the light guides **2900***a-c* each include a substantially planar upper surface **2904** and a smooth and concave (e.g., parabolic-shaped) lower surface **2908** to receive incident light from a light source, such as an LED lamp, on the printed circuit board **2516** and direct the light into a collimated or converging beam towards the upper surface **2904**. The light guides are positioned beneath a corresponding area **112***a-c* in the respective display panel **2108** for illumination. The support bracket **2800** comprises a first, second, and third light guide receptacles **2804***a-c* to receive the light guides **2900***a-c*, a stepped peripheral edge **2808** to engage a similarly shaped inner edge **920** of the corresponding first or second housing **704** and **708**, and fastener holes **2812**, which align with holes **924** in the corresponding housing to receive a fastener, such as a screw, to attach securely the support bracket **2800** to the housing. When engaged, the light guides and support bracket define a substantially planar upper surface **2816** to engage the lower surface of the display panel.

The light guides **2900** can be discrete from or integrated with the support bracket **2800**. Integration is effected using a multi-step molding process. In a first step, a substantially opaque resin is molded into a predefined shape including the light guide receptacles **2804***a-c*, each having a shape mating the outer surface of the corresponding light guide. In a second step, the substantially transparent, or light transmissive, resin, such as an acrylic resin, polycarbonate, epoxy, or glass, is injected into the light guide receptacles to form the unitary light guide assembly of FIGS. **28**A-D. When the light guides **2900** are discrete from the support bracket, they are engaged with the support bracket using a suitable adhesive, a friction fit, or other form of mechanical engagement. In other embodi-

ments, the light guides and support bracket are in multiple interlocking pieces. At any one time, the set of light guides is illuminated of whichever of the first and second screens is currently in focus. As will be appreciated, the light guides can be made in any desired shape, such as cylindrical, oval, rectangular, conical, or other shape (e.g., arrow, star shaped, and quarter moon shaped).

FIGS. **30**A-D depict a non-mechanical closure mechanism for the device **100**. As will be appreciated, a common mechanism for locking dual screen cellular phones in a closed orientation is to lock the opposing screens mechanically in position. The mechanical locking mechanism has sufficient force to resist hinges exerting an opposing spring-back force. Mechanical locking mechanisms can malfunction, especially after repeated usage, in response to breakage or other failure of the locking mechanism components. As shown in FIGS. **30**A-D, a non-mechanical closure mechanism can include first and second magnets **3000***a-b* positioned respectively on the first and second screens **104** and **108** such that the first and second magnets exert a magnetically attractive force on one another when the first and second screens **104** and **108** are in the closed position and substantially no magnetically attractive force on one another when the first and second screens **104** and **108** are in any of the fully open, easel, or modified easel positions. To provide the magnetic force of attraction, the first and second magnets **3000***a,b* are positioned such that opposing poles P_1 (e.g., N or S) and P_2 (e.g., the other of N or S) are adjacent to one another (FIG. **30**E) when the first and second screens **104** and **108** are in the fully closed position. To protect the display panel **2108** from the magnetic field of the first and second magnets **3000***a, b*, the first and second magnets **3000***a,b* are positioned on opposing sides of the display frame **2100** from the display panel **2108**. The use of the first and second magnets **3000***a,b* as a closure mechanism can avoid the problems commonly encountered with mechanical locking mechanisms. In other configurations, one of the first and second magnets is replaced by an iron-containing magnetic material. More than two magnets can be employed. The first and second magnets can be sized, positioned, and shaped to avoid interference with any of the other electronic components of the device **100**.

FIGS. **31**A-D depict a particular configuration of the position sensor(s) **172**. The position sensor(s) **172** include first and second Hall-Effect sensors **3100***a,b* positioned, respectively, adjacent to the first screen **104** and first housing **704** and to the second screen **108** and second housing **708**. The first Hall-Effect sensor **3100***a* is positioned proximal to a distal corner **3104** of the first housing **704** and screen **104** while the second Hall-Effect sensor **3100***b* is positioned at a location **3108** proximal to the hinge **128**, with the first and second Hall-Effect sensors **3100***a,b* being positioned on opposing sides of the hinge **128**. With reference to FIG. **31**, the first Hall-Effect sensor **3100***a* is positioned on an opposing side of the frame **2100** from the display panel **2108** and near the base of the first housing **704**. In contrast, the second Hall-Effect sensor **3100***b* is positioned on an opposing side of the frame **2100** from the display panel **2108** and near the base of the second housing **708**.

In operation, the first and second Hall-Effect sensors **3100***a,b* sense the strength of an applied magnetic field by measuring the Hall voltage across opposing faces of the sensor. While not wishing to be bound by any theory, an electric current is passed through the sensor, which current will produce a corresponding magnetic field. Applied magnetic field(s) cause the electrons in the current to deflect into a curved path as the elecrtrons move through the sensor material due to the interaction of the magnetic fields. This interaction is known as the Lorentz force. Consequently, one side of the sensor material will pass more electrons than the other. The resulting potential difference (voltage) appears across the material at right angles to both the magnetic fields from the permanent magnet and the flow of current. This is known as the Hall effect. In other words, the Hall voltage is directly proportional in size to both the electric current and the magnetic field. As the relative positions of the first and second screens **104** and **108** change, the magnitude of the cumulative magnetic field applied to each of the first and second Hall-Effect sensors also changes. The applied magnetic field is caused by the first and second magnets **3000***a,b* and electrical current passing through other electrical components adjacent to the first and second screens **104** and **108** of the device **100**, such as the printed circuit board, flexible circuits, antenna, GPS, microphone, speaker, and camera. A look up table mapping the measured Hall voltage for each of the first and second Hall-Effect sensors **3100***a,b* against first and second screen position can be used to determine the relative positions of the first and second screens **104** and **108**.

The exemplary systems and methods of this disclosure have been described in relation to mechanical features of a multi-screen device. However, to avoid unnecessarily obscuring the present disclosure, the preceding description omits a number of known structures and devices. This omission is not to be construed as a limitation of the scopes of the claims. Specific details are set forth to provide an understanding of the present disclosure. It should however be appreciated that the present disclosure may be practiced in a variety of ways beyond the specific detail set forth herein.

Furthermore, while the exemplary aspects, embodiments, and/or configurations illustrated herein show the various components of the system collocated, certain components of the system can be located remotely, at distant portions of a distributed network, such as a LAN and/or the Internet, or within a dedicated system. Thus, it should be appreciated, that the components of the system can be combined in to one or more devices, such as a Personal Computer (PC), laptop, netbook, Personal Digital Assistant (PDA), tablet, etc., or collocated on a particular node of a distributed network, such as an analog and/or digital telecommunications network, a packet-switch network, or a circuit-switched network. It will be appreciated from the preceding description, and for reasons of computational efficiency, that the components of the system can be arranged at any location within a distributed network of components without affecting the operation of the system. For example, the various components can be located in a switch such as a PBX and media server, gateway, in one or more communications devices, at one or more users' premises, or some combination thereof. Similarly, one or more functional portions of the system could be distributed between a telecommunications device(s) and an associated computing device.

Furthermore, it should be appreciated that the various links connecting the elements can be wired or wireless links, or any combination thereof, or any other known or later developed element(s) that is capable of supplying and/or communicating data to and from the connected elements. These wired or wireless links can also be secure links and may be capable of communicating encrypted information. Transmission media used as links, for example, can be any suitable carrier for electrical signals, including coaxial cables, copper wire and fiber optics, and may take the form of acoustic or light waves, such as those generated during radio-wave and infra-red data communications.

Also, while the flowcharts have been discussed and illustrated in relation to a particular sequence of events, it should

be appreciated that changes, additions, and omissions to this sequence can occur without materially affecting the operation of the disclosed embodiments, configuration, and aspects.

A number of variations and modifications of the disclosure can be used. It would be possible to provide for some features of the disclosure without providing others.

In some embodiments, the systems and methods of this disclosure can be implemented in conjunction with a special purpose computer, a programmed microprocessor or microcontroller and peripheral integrated circuit element(s), an ASIC or other integrated circuit, a digital signal processor, a hard-wired electronic or logic circuit such as discrete element circuit, a programmable logic device or gate array such as PLD, PLA, FPGA, PAL, special purpose computer, any comparable means, or the like. In general, any device(s) or means capable of implementing the methodology illustrated herein can be used to implement the various aspects of this disclosure. Exemplary hardware that can be used for the disclosed embodiments, configurations and aspects includes computers, handheld devices, telephones (e.g., cellular, Internet enabled, digital, analog, hybrids, and others), and other hardware known in the art. Some of these devices include processors (e.g., a single or multiple microprocessors), memory, nonvolatile storage, input devices, and output devices. Furthermore, alternative software implementations including, but not limited to, distributed processing or component/object distributed processing, parallel processing, or virtual machine processing can also be constructed to implement the methods described herein.

In yet another embodiment, the disclosed methods may be readily implemented in conjunction with software using object or object-oriented software development environments that provide portable source code that can be used on a variety of computer or workstation platforms. Alternatively, the disclosed system may be implemented partially or fully in hardware using standard logic circuits or VLSI design. Whether software or hardware is used to implement the systems in accordance with this disclosure is dependent on the speed and/or efficiency requirements of the system, the particular function, and the particular software or hardware systems or microprocessor or microcomputer systems being utilized.

In yet another embodiment, the disclosed methods may be partially implemented in software that can be stored on a storage medium, executed on programmed general-purpose computer with the cooperation of a controller and memory, a special purpose computer, a microprocessor, or the like. In these instances, the systems and methods of this disclosure can be implemented as program embedded on personal computer such as an applet, JAVA® or CGI script, as a resource residing on a server or computer workstation, as a routine embedded in a dedicated measurement system, system component, or the like. The system can also be implemented by physically incorporating the system and/or method into a software and/or hardware system.

Although the present disclosure describes components and functions implemented in the aspects, embodiments, and/or configurations with reference to particular standards and protocols, the aspects, embodiments, and/or configurations are not limited to such standards and protocols. Other similar standards and protocols not mentioned herein are in existence and are considered to be included in the present disclosure. Moreover, the standards and protocols mentioned herein and other similar standards and protocols not mentioned herein are periodically superseded by faster or more effective equivalents having essentially the same functions. Such replacement standards and protocols having the same functions are considered equivalents included in the present disclosure.

The present disclosure, in various aspects, embodiments, and/or configurations, includes components, methods, processes, systems and/or apparatus substantially as depicted and described herein, including various aspects, embodiments, configurations embodiments, sub-combinations, and/or subsets thereof. Those of skill in the art will understand how to make and use the disclosed aspects, embodiments, and/or configurations after understanding the present disclosure. The present disclosure, in various aspects, embodiments, and/or configurations, includes providing devices and processes in the absence of items not depicted and/or described herein or in various aspects, embodiments, and/or configurations hereof, including in the absence of such items as may have been used in previous devices or processes, e.g., for improving performance, achieving ease and\or reducing cost of implementation.

The foregoing discussion has been presented for purposes of illustration and description. The foregoing is not intended to limit the disclosure to the form or forms disclosed herein. In the foregoing Detailed Description for example, various features of the disclosure are grouped together in one or more aspects, embodiments, and/or configurations for the purpose of streamlining the disclosure. The features of the aspects, embodiments, and/or configurations of the disclosure may be combined in alternate aspects, embodiments, and/or configurations other than those discussed above. This method of disclosure is not to be interpreted as reflecting an intention that the claims require more features than are expressly recited in each claim. Rather, as the following claims reflect, inventive aspects lie in less than all features of a single foregoing disclosed aspect, embodiment, and/or configuration. Thus, the following claims are hereby incorporated into this Detailed Description, with each claim standing on its own as a separate preferred embodiment of the disclosure.

Moreover, though the description has included description of one or more aspects, embodiments, and/or configurations and certain variations and modifications, other variations, combinations, and modifications are within the scope of the disclosure, e.g., as may be within the skill and knowledge of those in the art, after understanding the present disclosure. It is intended to obtain rights which include alternative aspects, embodiments, and/or configurations to the extent permitted, including alternate, interchangeable and/or equivalent structures, functions, ranges or steps to those claimed, whether or not such alternate, interchangeable and/or equivalent structures, functions, ranges or steps are disclosed herein, and without intending to publicly dedicate any patentable subject matter.

What is claimed is:

1. A housing for a handheld computing device, the device comprising a screen comprising a touch sensitive display, a light source to illuminate at least a portion of the screen, a speaker, a microphone, a camera, a tangible and non-transient computer-readable medium that stores one or more software components, a microprocessor that, based on user input, executes the one or more software components stored in the computer readable medium, a cellular telephony transceiver that transmits and receives voice, multi-media, and data signals over a cellular network, a battery to provide power to the touch sensitive display, speaker, microphone, camera, and microprocessor, the housing comprising:

a metallic outer shell having a substantially flat base and a sidewall connected to a periphery of the base, the metallic outer shell having an inner surface and an outer surface;

a polymeric portion nanomolded on the inner surface of the metallic outer shell in a predetermined location to provide rigidity to the metallic outer shell, wherein the base of the metallic outer shell comprises a top portion, a bottom portion, and a middle portion interposed between the top and bottom portions, wherein the predetermined location comprises the top and bottom portions and at least a portion of the sidewall of the base but not the middle portion, and wherein the battery is positioned in the middle portion and provides rigidity to the housing;

at least one optically transmissive light guide having a concave surface to receive incident light from the light source and direct the incident light to the screen to illuminate the at least a portion of the screen, wherein the concave surface refracts the incident light along an optical axis of the light guide, wherein the at least a portion of the screen illuminated by the light guide is substantially free of pixels to display content, wherein a light emitting surface of the at least one light guide is substantially flat to engage a substantially planar surface of the screen, wherein the concave surface is substantially in an opposing relationship to the light emitting surface, and wherein the concave surface is positioned to receive light directly from the light source; and

a light guide bracket to engage the housing and the at least one light guide, the light guide bracket maintaining a position and orientation of the light guide relative to the light source.

2. The housing of claim **1**, wherein the metallic outer shell has a thickness of less than about 0.3 millimeters.

3. The housing of claim **1**, wherein the device further comprises a backing plate that engages and provides rigidity to the housing and provides a datum for positioning the battery.

4. The housing of claim **1**, wherein the metallic outer shell comprises an inwardly angled beveled edge to assist a user in gripping the handheld computing device and wherein the device further comprises an off-screen gesture region to receive gestures from the user, the off-screen gesture region being located at a distance from the screen.

5. The housing of claim **1**, wherein the middle portion is not covered by the polymeric portion.

6. The housing of claim **5**, wherein the polymeric portion nanomolded on the sidewall includes a shelf extending inward from the sidewall of the metallic outer shell.

7. The housing of claim **1**, wherein the predetermined location is etched with a chemical prior to application of the polymeric portion to provide a strong and resilient bond between the metallic outer shell and the polymeric portion and wherein the polymeric portion comprises polyphenol plastic.

8. The housing of claim **1**, wherein the base is substantially rectangular, wherein the middle portion is exposed, and wherein the sidewall has four sides.

9. The housing of claim **8**, wherein the sidewall has an elongate opening formed in one side, and wherein the elongate opening is configured to accommodate a hinge.

10. The housing of claim **3**, wherein the backing plate comprises an elongate recessed area that receives a flexible circuit extending from a position beneath the battery to a circuit board positioned above the battery, the circuit board comprising one or more of the touch sensitive display, speaker, microphone, camera, tangible and non-transient computer-readable medium, microprocessor, and cellular telephony transceiver.

11. The housing of claim **1**, wherein a corrugated stiffener comprising a series of substantially parallel ridges and substantially parallel troughs connects to the polymeric portion of the housing to provide rigidity to the housing.

12. The housing of claim **1**, wherein the housing comprises a frame that substantially surrounds and movably engages a dock connector, thereby enabling the dock connector to move within an interior space of the frame to accommodate misalignments of a connector attached to a peripheral device.

13. The housing of claim **1**, wherein a flexible electrically conductive member electrically interconnects the battery to a circuit board positioned above the battery, the circuit board comprising one or more of the touch sensitive screen, speaker, microphone, camera, tangible and non-transient computer-readable medium, microprocessor, and cellular telephony transceiver, wherein the flexible electrically conductive member comprises plural first conductive pads to engage conductive pads on the circuit board and plural second conductive pads to engage conductive pads on the battery, and wherein the conductive pads on the battery and the circuit board are positioned on opposing sides of the battery.

14. A housing for a handheld computing device, the device comprising a screen comprising a touch sensitive display, a speaker, a microphone, a camera, a tangible and non-transient computer-readable medium that stores one or more software components, a microprocessor that, based on user input, executes the one or more software components stored in the computer readable medium, a cellular telephony transceiver that transmits and receives voice, multi-media, and data signals over a cellular network, a battery to provide power to the touch sensitive display, speaker, microphone, camera, and microprocessor, the housing comprising:

a metallic outer shell having a substantially flat base and a sidewall connected to a periphery of the base, the metallic outer shell having an inner surface and an outer surface;

a polymeric portion nanomolded on the inner surface of the metallic outer shell in a predetermined location to provide rigidity to the metallic outer shell, wherein the base of the metallic outer shell comprises a top portion, a bottom portion, and a middle portion interposed between the top and bottom portions, wherein the predetermined location comprises the top and bottom portions and at least a portion of the sidewall of the base but not the middle portion, wherein a thickness of the middle portion is less than a thickness of the predetermined location, and wherein the battery is positioned in the middle portion and provides rigidity to the housing; and

a backing plate positioned below a shelf formed on the sidewall, the backing plate providing rigidity to the housing and a datum for positioning the battery, wherein the backing plate comprises an elongate recessed area that receives a flexible circuit extending from a position beneath the battery to a circuit board positioned above the battery.

15. The housing of claim **14**, wherein the metallic outer shell has a thickness of less than about 0.3 millimeters, wherein the polymeric portion nanomolded on the sidewall includes a shelf extending inward from the sidewall of the metallic outer shell, wherein the predetermined location is etched with a chemical prior to application of the polymeric portion to provide a strong and resilient bond between the metallic outer shell and the polymeric portion and wherein the polymeric portion comprises polyphenol plastic, and

wherein the base is substantially rectangular, wherein the middle portion is exposed, and wherein the sidewall has four sides.

16. The housing of claim **14**, wherein the metallic outer shell comprises an inwardly angled beveled edge to assist a user in gripping the handheld computing device and wherein the device further comprises an off-screen gesture region to receive gestures from the user, the off-screen gesture region being located at a distance from the screen.

17. The housing of claim **14**, wherein the middle portion is not covered by the polymeric portion.

18. The housing of claim **15**, wherein the sidewall has an elongate opening formed in one side, and wherein the elongate opening is configured to accommodate a hinge.

19. The housing of claim **14**, wherein the backing plate comprises an elongate recessed area that receives a flexible circuit extending from a position beneath the battery to a circuit board positioned above the battery, the circuit board comprising one or more of the touch sensitive display, speaker, microphone, camera, tangible and non-transient computer-readable medium, microprocessor, and cellular telephony transceiver.

20. The housing of claim **14**, wherein a corrugated stiffener comprising a series of substantially parallel ridges and substantially parallel troughs connects to the polymeric portion of the housing to provide rigidity to the housing.

21. The housing of claim **14**, wherein the housing comprises a frame that substantially surrounds and movably engages a dock connector, thereby enabling the dock connector to move within an interior space of the frame to accommodate misalignments of a connector attached to a peripheral device.

22. The housing of claim **14**, wherein a flexible electrically conductive member electrically interconnects the battery to a circuit board positioned above the battery, the circuit board comprising one or more of the touch sensitive screen, speaker, microphone, camera, tangible and non-transient computer-readable medium, microprocessor, and cellular telephony transceiver, wherein the flexible electrically conductive member comprises plural first conductive pads to engage conductive pads on the circuit board and plural second conductive pads to engage conductive pads on the battery, and wherein the conductive pads on the battery and the circuit board are positioned on opposing sides of the battery.

23. The housing of claim **14**, wherein the device comprises a light source to illuminate at least a portion of the screen and wherein the housing comprises (a) at least one optically transmissive light guide having a concave surface to receive incident light from the light source and direct the incident light to the screen to illuminate the at least a portion of the screen, wherein the concave surface refracts the incident light along an optical axis of the light guide, wherein the at least a portion of the screen illuminated by the light guide is substantially free of pixels to display content, wherein a light emitting surface of the at least one light guide is substantially flat to engage a substantially planar surface of the screen, wherein the concave surface is substantially in an opposing relationship to the light emitting surface, and wherein the concave surface is positioned to receive light directly from the light source, and (b) a light guide bracket to engage the housing and the at least one light guide, the light guide bracket maintaining a position and orientation of the light guide relative to the light source.

24. A housing for a handheld computing device, the device comprising a screen comprising a touch sensitive display, a speaker, a microphone, a camera, a tangible and non-transient computer-readable medium that stores one or more software components, a microprocessor that, based on user input, executes the one or more software components stored in the computer readable medium, a cellular telephony transceiver that transmits and receives voice, multi-media, and data signals over a cellular network, a battery to provide power to the touch sensitive display, speaker, microphone, camera, and microprocessor, the housing comprising:

a metallic outer shell having a substantially flat base and a sidewall connected to a periphery of the base, the metallic outer shell having an inner surface and an outer surface;

a polymeric portion nanomolded on the inner surface of the metallic outer shell in a predetermined location to provide rigidity to the metallic outer shell, wherein the base of the metallic outer shell comprises a top portion, a bottom portion, and a middle portion interposed between the top and bottom portions, wherein the predetermined location comprises the top and bottom portions and at least a portion of the sidewall of the base but not the middle portion, wherein a thickness of the middle portion is less than a thickness of the predetermined location, wherein the metallic outer shell has a thickness of less than about 0.3 millimeters, wherein the middle portion is not covered by the polymeric portion, and wherein the battery is positioned in the middle portion and provides rigidity to the housing; and

a backing plate positioned below a shelf formed on the sidewall, wherein the backing plate provides rigidity to the housing and a datum for positioning the battery and wherein the backing plate comprises an elongate recessed area that receives a flexible circuit extending from a position beneath the battery to a circuit board positioned above the battery.

* * * * *