US009292471B2

(12) **United States Patent**
Fung et al.

(10) **Patent No.: US 9,292,471 B2**
(45) **Date of Patent: Mar. 22, 2016**

(54) **COORDINATED VEHICLE RESPONSE SYSTEM AND METHOD FOR DRIVER BEHAVIOR**

(71) Applicant: **Honda Motor Co., Ltd.**, Tokyo (JP)

(72) Inventors: **Kin C. Fung**, Dublin, OH (US); **Timothy J. Dick**, Dublin, OH (US)

(73) Assignee: **Honda Motor Co., Ltd.**, Tokyo (JP)

(*) Notice: Subject to any disclaimer, the term of this patent is extended or adjusted under 35 U.S.C. 154(b) by 175 days.

(21) Appl. No.: **13/843,194**

(22) Filed: **Mar. 15, 2013**

(65) **Prior Publication Data**

US 2013/0226408 A1 Aug. 29, 2013

Related U.S. Application Data

(63) Continuation-in-part of application No. 13/030,637, filed on Feb. 18, 2011, now Pat. No. 8,698,639.

(51) **Int. Cl.**
G06F 17/00 (2006.01)
B62D 6/00 (2006.01)
(Continued)

(52) **U.S. Cl.**
CPC ***G06F 17/00*** (2013.01); ***A61B 5/1114*** (2013.01); ***A61B 5/18*** (2013.01); ***A61B 5/6893*** (2013.01);
(Continued)

(58) **Field of Classification Search**
CPC A61B 2562/0257; A61B 5/0205; A61B 5/0476; A61B 5/055; A61B 5/1103; A61B 5/1114; A61B 5/14553; A61B 5/18; A61B 5/6893; B60K 28/06; B60K 28/066; B60T 2201/03; B60T 2201/08; B60T 2201/12; B60T 2220/02; B60T 8/172; B60W 2040/0827; B60W 2050/0071; B60W 2540/22; B60W 2540/26; B60W 40/09; B60W 50/12; B62D 15/025; B62D 6/00; B62D 6/007; G01C 21/3697; G06K 9/00845; G06F 17/00; G08B 21/06; G08G 1/166; G08G 1/167
USPC 701/1, 36, 41, 45, 48, 51, 70; 340/426.1, 426.11, 426.19, 426.25, 340/426.32, 575, 576, 439, 35, 457.1
See application file for complete search history.

(56) **References Cited**

U.S. PATENT DOCUMENTS

5,057,834 A 10/1991 Nordstrom
5,195,606 A 3/1993 Martyniuk
(Continued)

FOREIGN PATENT DOCUMENTS

CN 1802273 7/2006
DE 10126224 12/2002
(Continued)

OTHER PUBLICATIONS

Office Action of U.S. Appl. No. 13/843,249 dated Oct. 7, 2014, 30 pages.
(Continued)

Primary Examiner — Thomas G Black
Assistant Examiner — Ce Li
(74) *Attorney, Agent, or Firm* — Rankin, Hill & Clark LLP

(57) **ABSTRACT**

Methods of assessing driver behavior include monitoring vehicle systems and driver monitoring systems to accommodate for a slow reaction time, attention lapse and/or alertness of a driver. When it is determined that a driver is drowsy, for example, the response system may modify the operation of one or more vehicle systems. The response system can modify the control of two or more systems simultaneously in response to driver behavior.

16 Claims, 64 Drawing Sheets

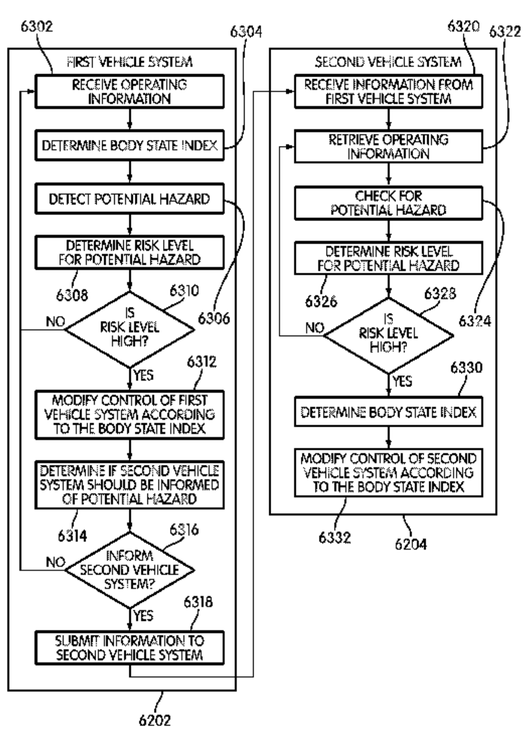

(51) **Int. Cl.**

A61B 5/18	(2006.01)
B60K 28/06	(2006.01)
B60T 8/172	(2006.01)
G08G 1/16	(2006.01)
B62D 15/02	(2006.01)
B60W 40/09	(2012.01)
G06K 9/00	(2006.01)
B60W 50/12	(2012.01)
A61B 5/00	(2006.01)
A61B 5/0205	(2006.01)
A61B 5/0476	(2006.01)
A61B 5/055	(2006.01)
A61B 5/11	(2006.01)
A61B 5/1455	(2006.01)
G01C 21/36	(2006.01)
G08B 21/06	(2006.01)
B60W 40/08	(2012.01)
B60W 50/00	(2006.01)

(52) **U.S. Cl.**

CPC ***B60K 28/06*** (2013.01); ***B60K 28/066*** (2013.01); ***B60T 8/172*** (2013.01); ***B60W 40/09*** (2013.01); ***B60W 50/12*** (2013.01); ***B62D 6/00*** (2013.01); ***B62D 6/007*** (2013.01); ***B62D 15/025*** (2013.01); ***G06K 9/00845*** (2013.01); ***G08G 1/166*** (2013.01); ***G08G 1/167*** (2013.01); *A61B 5/0205* (2013.01); *A61B 5/0476* (2013.01); *A61B 5/055* (2013.01); *A61B 5/1103* (2013.01); *A61B 5/14553* (2013.01); *A61B 2562/0257* (2013.01); *B60T 2201/03* (2013.01); *B60T 2201/08* (2013.01); *B60T 2201/12* (2013.01); *B60T 2220/02* (2013.01); *B60W 2040/0827* (2013.01); *B60W 2050/0071* (2013.01); *B60W 2540/22* (2013.01); *B60W 2540/26* (2013.01); *G01C 21/3697* (2013.01); *G08B 21/06* (2013.01)

(56) **References Cited**

U.S. PATENT DOCUMENTS

5,485,892	A	1/1996	Fujita	
5,913,375	A	6/1999	Nishikawa	
5,942,979	A	8/1999	Luppino	
6,009,377	A	12/1999	Hiwatashi	
6,104,296	A	8/2000	Yasushi et al.	
6,154,123	A *	11/2000	Kleinberg	G08B 21/06 180/169
6,172,613	B1	1/2001	Deline et al.	
6,185,487	B1	2/2001	Kondo et al.	
6,337,629	B1	1/2002	Bader	
6,393,348	B1	5/2002	Ziegler et al.	
6,435,626	B1	8/2002	Kostadina	
6,485,415	B1	11/2002	Uchiyama et al.	
6,485,418	B2	11/2002	Yasushi et al.	
6,542,081	B2	4/2003	Torch	
6,697,723	B2	2/2004	Olsen et al.	
6,734,799	B2	5/2004	Munch	
6,791,462	B2	9/2004	Choi	
6,809,643	B1	10/2004	Elrod et al.	
6,822,573	B2	11/2004	Basir et al.	
6,909,947	B2	6/2005	Douros et al.	
6,950,027	B2	9/2005	Banas	
6,974,414	B2	12/2005	Victor	
7,032,705	B2	4/2006	Zheng et al.	
7,046,128	B2	5/2006	Roberts	
7,092,849	B2	8/2006	Lafitte et al.	
7,102,495	B2	9/2006	Mattes et al.	
7,138,938	B1	11/2006	Prakah-Asante et al.	
7,183,930	B2	2/2007	Basir et al.	
7,183,932	B2	2/2007	Bauer	
7,196,629	B2	3/2007	Ruoss et al.	
7,248,997	B2	7/2007	Nagai et al.	
7,254,439	B2	8/2007	Misczynski et al.	
7,266,430	B2	9/2007	Basson et al.	
7,283,056	B2	10/2007	Bukman et al.	
7,301,465	B2	11/2007	Tengshe et al.	
7,304,580	B2	12/2007	Sullivan et al.	
7,349,792	B2	3/2008	Durand	
7,350,608	B2	4/2008	Fernandez	
7,401,233	B2	7/2008	Duri et al.	
7,424,357	B2	9/2008	Ozaki et al.	
7,465,272	B2	12/2008	Kriger	
7,502,152	B2	3/2009	Lich et al.	
7,507,207	B2	3/2009	Sakai et al.	
7,511,833	B2	3/2009	Breed	
7,517,099	B2	4/2009	Hannah	
7,532,964	B2	5/2009	Fujita et al.	
7,576,642	B2	8/2009	Rodemer	
7,618,091	B2	11/2009	Akaike et al.	
7,620,521	B2	11/2009	Breed et al.	
7,639,148	B2	12/2009	Victor	
7,649,445	B2	1/2010	Kuramori et al.	
7,650,217	B2	1/2010	Ueyama	
7,663,495	B2	2/2010	Haque et al.	
7,672,764	B2	3/2010	Yoshioka et al.	
7,719,431	B2	5/2010	Bolourchi	
RE41,376	E	6/2010	Torch	
7,803,111	B2	9/2010	Kriger	
7,805,224	B2	9/2010	Basson et al.	
7,809,954	B2	10/2010	Miller et al.	
7,864,039	B2	1/2011	Georgeson	
7,866,703	B2	1/2011	Spahn et al.	
7,948,387	B2	5/2011	Ishida et al.	
8,140,241	B2	3/2012	Takeda et al.	
8,157,730	B2	4/2012	LeBoeuf et al.	
8,339,268	B2 *	12/2012	Deng	G08B 21/06 340/575
8,483,909	B2 *	7/2013	Visconti	B60W 40/09 180/272
8,698,639	B2	4/2014	Fung et al.	
2002/0005778	A1 *	1/2002	Breed et al.	340/435
2004/0044293	A1	3/2004	Burton	
2004/0088095	A1	5/2004	Eberle et al.	
2005/0022606	A1	2/2005	Partin et al.	
2005/0030184	A1 *	2/2005	Victor	340/576
2005/0080533	A1	4/2005	Basir et al.	
2005/0155808	A1	7/2005	Braeuchle et al.	
2005/0246134	A1	11/2005	Nagai et al.	
2006/0082437	A1	4/2006	Yuhara	
2006/0161322	A1	7/2006	Njoku	
2006/0212195	A1	9/2006	Veith et al.	
2006/0283652	A1	12/2006	Yanai et al.	
2007/0159344	A1	7/2007	Kisacanin	
2007/0190970	A1	8/2007	Watson	
2007/0243854	A1	10/2007	Taki et al.	
2007/0265540	A1	11/2007	Fuwamoto et al.	
2007/0299910	A1	12/2007	Fontenot et al.	
2008/0015422	A1	1/2008	Wessel	
2008/0033518	A1	2/2008	Rousso et al.	
2008/0040004	A1 *	2/2008	Breed	701/45
2008/0046150	A1 *	2/2008	Breed	701/45
2008/0167757	A1	7/2008	Kanevsky et al.	
2008/0183388	A1	7/2008	Goodrich	
2008/0195261	A1	8/2008	Breed	
2008/0228046	A1	9/2008	Futatsuyama et al.	
2008/0290644	A1	11/2008	Spahn et al.	
2008/0294015	A1	11/2008	Tsuji	
2008/0312796	A1	12/2008	Matsuura et al.	
2009/0040054	A1	2/2009	Wang et al.	
2009/0091435	A1	4/2009	Bolourchi	
2009/0156988	A1	6/2009	Ferren et al.	
2009/0209829	A1	8/2009	Yanagidaira et al.	
2009/0234552	A1	9/2009	Takeda et al.	
2009/0268022	A1	10/2009	Omi	
2009/0318777	A1	12/2009	Kameyama	
2009/0326399	A1	12/2009	Barrero Batalloso et al.	
2010/0049068	A1	2/2010	Fuwamoto et al.	
2010/0106365	A1	4/2010	Visconti et al.	
2010/0148923	A1	6/2010	Takizawa	

(56) **References Cited**

U.S. PATENT DOCUMENTS

2010/0185101	A1	7/2010	Sakai et al.	
2010/0222687	A1	9/2010	Thijs et al.	
2010/0234692	A1	9/2010	Kuo et al.	
2010/0295707	A1	11/2010	Bennie et al.	
2011/0028857	A1	2/2011	Rodriguez Ibanez et al.	
2011/0046970	A1	2/2011	Fontenot	
2011/0109462	A1	5/2011	Deng et al.	
2011/0169625	A1 *	7/2011	James	B60Q 9/008 340/439
2011/0213511	A1 *	9/2011	Visconti	B60W 40/09 701/1
2012/0010514	A1	1/2012	Vrazic	
2012/0054054	A1	3/2012	Kameyama	
2012/0083668	A1	4/2012	Pradeep et al.	
2012/0212353	A1	8/2012	Fung et al.	
2012/0290215	A1	11/2012	Adler et al.	
2013/0245886	A1	9/2013	Fung et al.	

FOREIGN PATENT DOCUMENTS

DE	102004045677		7/2005
DE	102009051260		6/2010
DE	202012001096	U1	5/2012
FR	2880166		6/2006
JP	06-107032		4/1994
JP	9216567		8/1997
JP	11105579		4/1999
JP	11-151231		6/1999
JP	11-328593		11/1999
JP	2000-57479		2/2000
JP	2001-151137		6/2001
JP	2004-246708		9/2004
JP	2005-168908		6/2005
JP	3687356	B2	8/2005
JP	3757684		3/2006
JP	2006-182277		7/2006
JP	2006-302206		11/2006
JP	3862192	B2	12/2006
JP	2007-229116		9/2007
JP	2008-181327		8/2008
JP	2008305096		12/2008
JP	2009-080718		4/2009
JP	2009-101714		5/2009
JP	2009-116693		5/2009
JP	2009-172205		8/2009
JP	2009-202841		9/2009
JP	2009213779		9/2009
JP	4340991		10/2009
JP	4361011		11/2009
JP	2010122897		6/2010
JP	2010128649		6/2010
JP	2010128669		6/2010
JP	2010-143578		7/2010
JP	2010-186276		8/2010
JP	2011008457		1/2011
KR	20040098704		11/2004
KR	20050015771		2/2005
WO	02/096694		12/2002
WO	2004/108466		12/2004
WO	2007/090896		8/2007
WO	2009/098731		8/2009

OTHER PUBLICATIONS

Office Action of CN Serial No. 201280009235.6, dated Oct. 20, 2014, 8 pages.
Office Action of CN Serial No. 201280009235.6, dated Oct. 20, 2014, 8 pages, English Translation.
Extended European Search Report of EP12747073.0 dated Jul. 3, 2014.
Office Action of U.S. Appl. No. 13/030,637 dated Mar. 28, 2013, 38 pages.
Office Action of KR Serial No. 10-2013-7024830 dated Oct. 13, 2014, 9 pages.
Office Action of KR Serial No. 10-2013-7024830 dated Oct. 13, 2014, 11 pages, English translation.
International Search Report and Written Opinion of PCT/US2014/020131 dated Jul. 1, 2014.
Examination Report of AU2012218054 dated Jun. 20, 2014, 2 pages.
Office Action of U.S. Appl. No. 13/030,637 dated Aug. 7, 2013, 23 pages.
Serbedzija, et al. "Vehicle as a Co-Driver", 1st International Symposium on Vehicular Computing Systems, Published May 16, 2010, 7 pages.
http://media.ford.com/article_display.cfm?2article_id=36728
"Ford Research Developing Intelligent System to Help Drivers Manage Stressful Situations on the Road", Dearborn, Michigan, Jun. 27, 2012, 2 pages.
http://reflect.pst.ifi.lmu.de/ "The Reflect Project" article (1 page) and Video Link to "The Reflect Project" : http://vimeo.com/25081038, filmed in Maranello, Italy, Mar. 2011, 7 minutes, 53 seconds.
Wiegand, et al., Development and Evaluation of a Naturalistic Observer Rating of Drowsiness Protocol; Feb. 25, 2009 retrieved from the internet, retrieved on May 14, 2012; http://scholar.lib.vt.edu/VTTI/reports/ORD_Final_Report_022509.pdf, entire document.
International Search Report and Written Opinion mailed May 23, 2012 in PCT Application No. PCT/US2012/023362.
Anneke Heitmann,et al., "Technologies for the Monitoring and Prevention of Driver Fatigue", Proceedings of the First International Driving Symposium on Human Factors in Driver Assessment, Training and Vehicle Design, 2001, pp. 81-86.
Greg Kable, "Ferrari Plans Mind Reading Tech", Autocar.co.uk, Jan. 7, 2011 (last visited May 13, 2011).
Martin M. Ofalt, Jr. "Ford, MIT Partnering to Increase Driver Wellness and Safety", The College Driver.com, Jan. 24, 2010 (Last visited May 9, 2011).
Press Release: "Ford and MIT Research Study Shows Technological Advancements Reduce Stress on Driver", http://web.mit.edu/press/2010/ford-mit-release.html, Nov. 4, 2010 (last visited May 9, 2011).
Bryan Reimer, et al., "An Evaluation of Driver Reactions to New Vehicle Parking Assist Technologies Developed to Reduce Driver Stress", MIT AgeLab White Paper, Nov. 4, 2010, pp. 1-26.
P. Boyraz, et al., "Multi-Sensor Driver-Drowsiness Monitoring" Proceedings of the I MECH E Part D Journal of Automobile Engineering, vol. 222, No. 11, Jul. 23, 2008, pp. 1857-1878.
Office Action of Korean Patent Application No. 10-2015-7005245 dated Aug. 7, 2015, 8 pages.
Office Action of Korean Patent Application No. 10-2015-7005245 dated Aug. 7, 2015, 9 pages (English Translation).
Office Action of U.S. Appl. No. 13/843,249 dated Apr. 28, 2015, 19 pages.
Video: https://www.youtube.com/watch?v=obPnLufAu7o, printed May 11, 2015, 2 pages.
Office Action of U.S. Appl. No. 14/461,530 dated Oct. 2, 2015, 44 pages.
Office Action of U.S. Appl. No. 13/843,249 dated Sep. 4, 2015, 11 pages.
Office Action of U.S. Appl. No. 14/315,726 dated Sep. 9, 2015, 42 pages.
Office Action of Japanese Patent Application No. 2014-227769 dated Oct. 20, 2015, 9 pages.
International Search Report and Written Opinion of PCT/US2015/037019 dated Nov. 2, 2015, 12 pages.
Office Action of U.S. Appl. No. 13/843,249 dated Nov. 24, 2015, 12 pages.
Office Action of U.S. Appl. No. 14/315,726 dated Dec. 2, 2015, 18 pages.

* cited by examiner

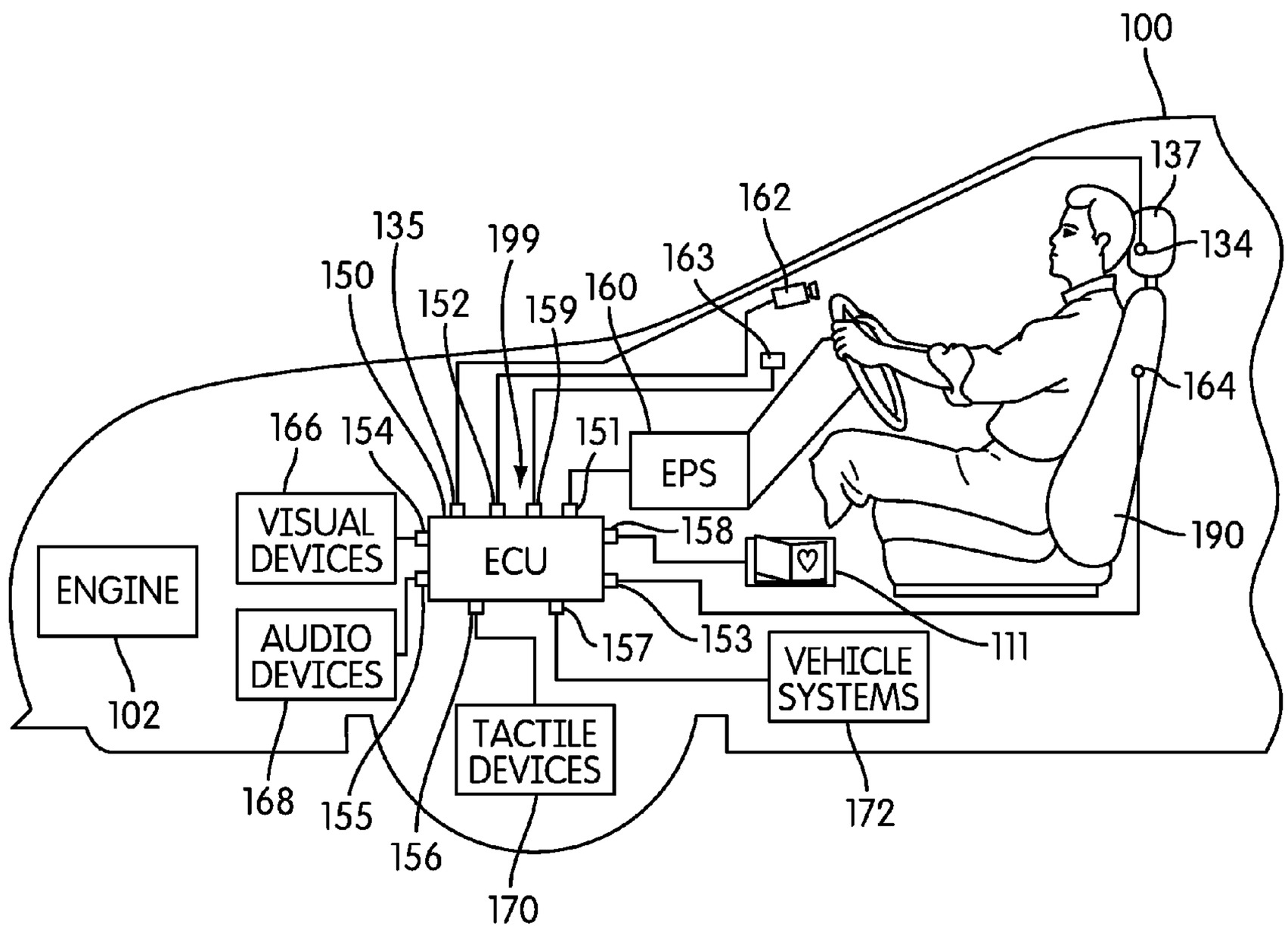
100
137
134
162
135
199
163
150
152
159
160
164
166
154
151
EPS
VISUAL DEVICES
ECU
158
190
ENGINE
AUDIO DEVICES
157
153
111
VEHICLE SYSTEMS
102
TACTILE DEVICES
168
155
156
172
170

FIG. 1

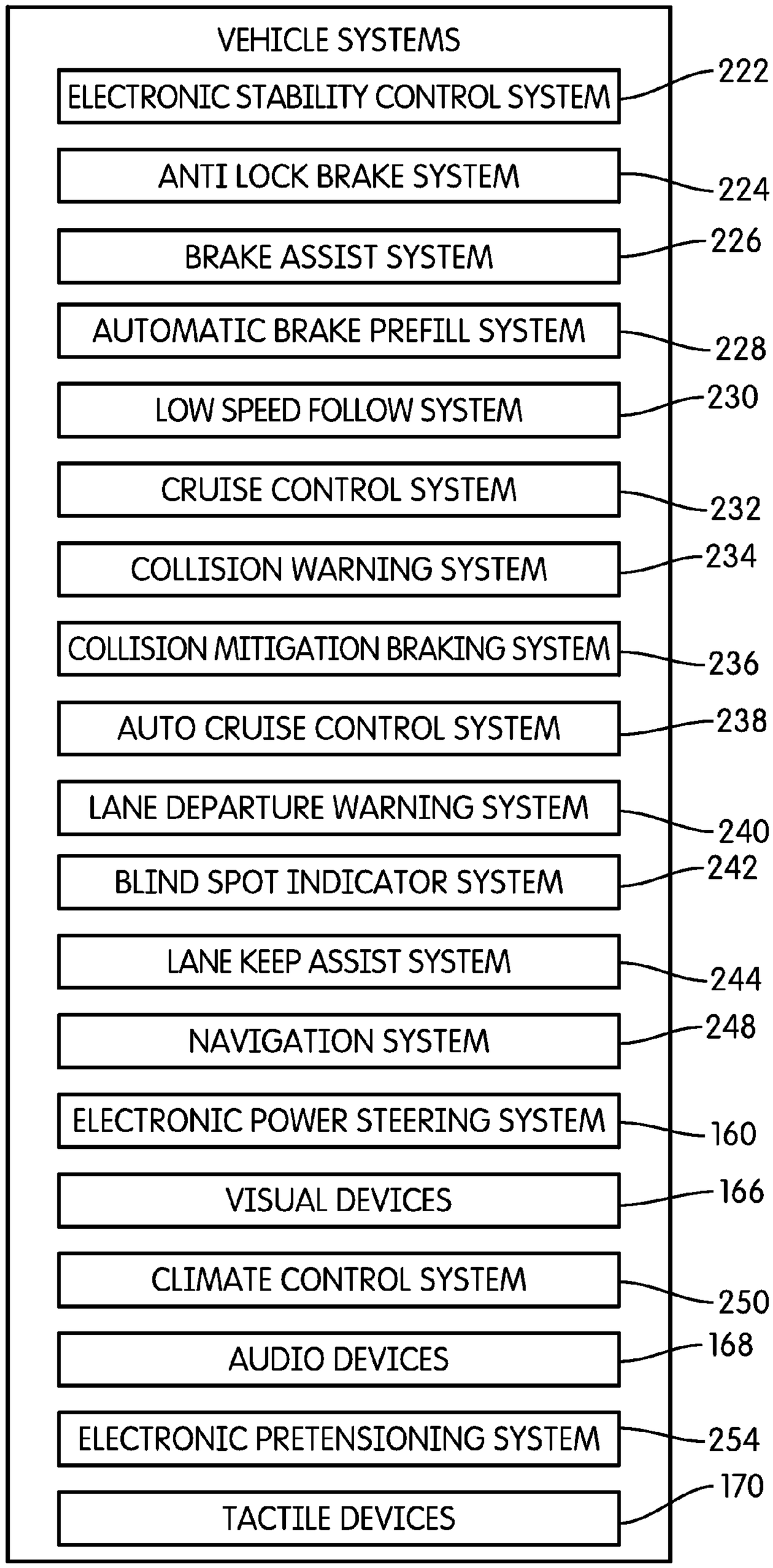
VEHICLE SYSTEMS
ELECTRONIC STABILITY CONTROL SYSTEM
222
ANTI LOCK BRAKE SYSTEM
224
BRAKE ASSIST SYSTEM
226
AUTOMATIC BRAKE PREFILL SYSTEM
228
LOW SPEED FOLLOW SYSTEM
230
CRUISE CONTROL SYSTEM
232
COLLISION WARNING SYSTEM
234
COLLISION MITIGATION BRAKING SYSTEM
236
AUTO CRUISE CONTROL SYSTEM
238
LANE DEPARTURE WARNING SYSTEM
240
BLIND SPOT INDICATOR SYSTEM
242
LANE KEEP ASSIST SYSTEM
244
NAVIGATION SYSTEM
248
ELECTRONIC POWER STEERING SYSTEM
160
VISUAL DEVICES
166
CLIMATE CONTROL SYSTEM
250
AUDIO DEVICES
168
ELECTRONIC PRETENSIONING SYSTEM
254
TACTILE DEVICES
170

FIG. 2

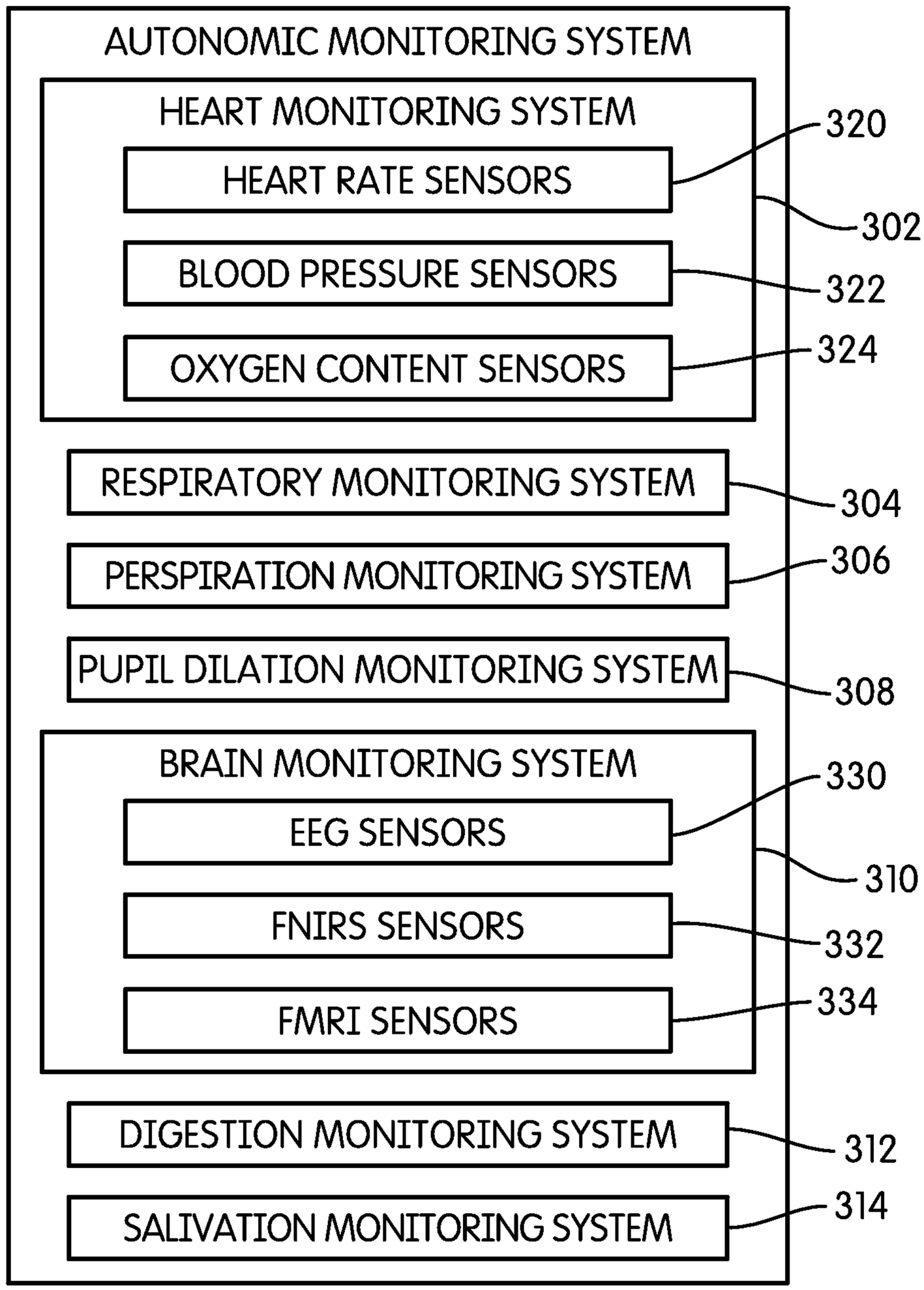
AUTONOMIC MONITORING SYSTEM
HEART MONITORING SYSTEM
HEART RATE SENSORS
BLOOD PRESSURE SENSORS
OXYGEN CONTENT SENSORS
RESPIRATORY MONITORING SYSTEM
PERSPIRATION MONITORING SYSTEM
PUPIL DILATION MONITORING SYSTEM
BRAIN MONITORING SYSTEM
EEG SENSORS
FNIRS SENSORS
FMRI SENSORS
DIGESTION MONITORING SYSTEM
SALIVATION MONITORING SYSTEM
320
302
322
324
304
306
308
330
310
332
334
312
314

FIG. 3

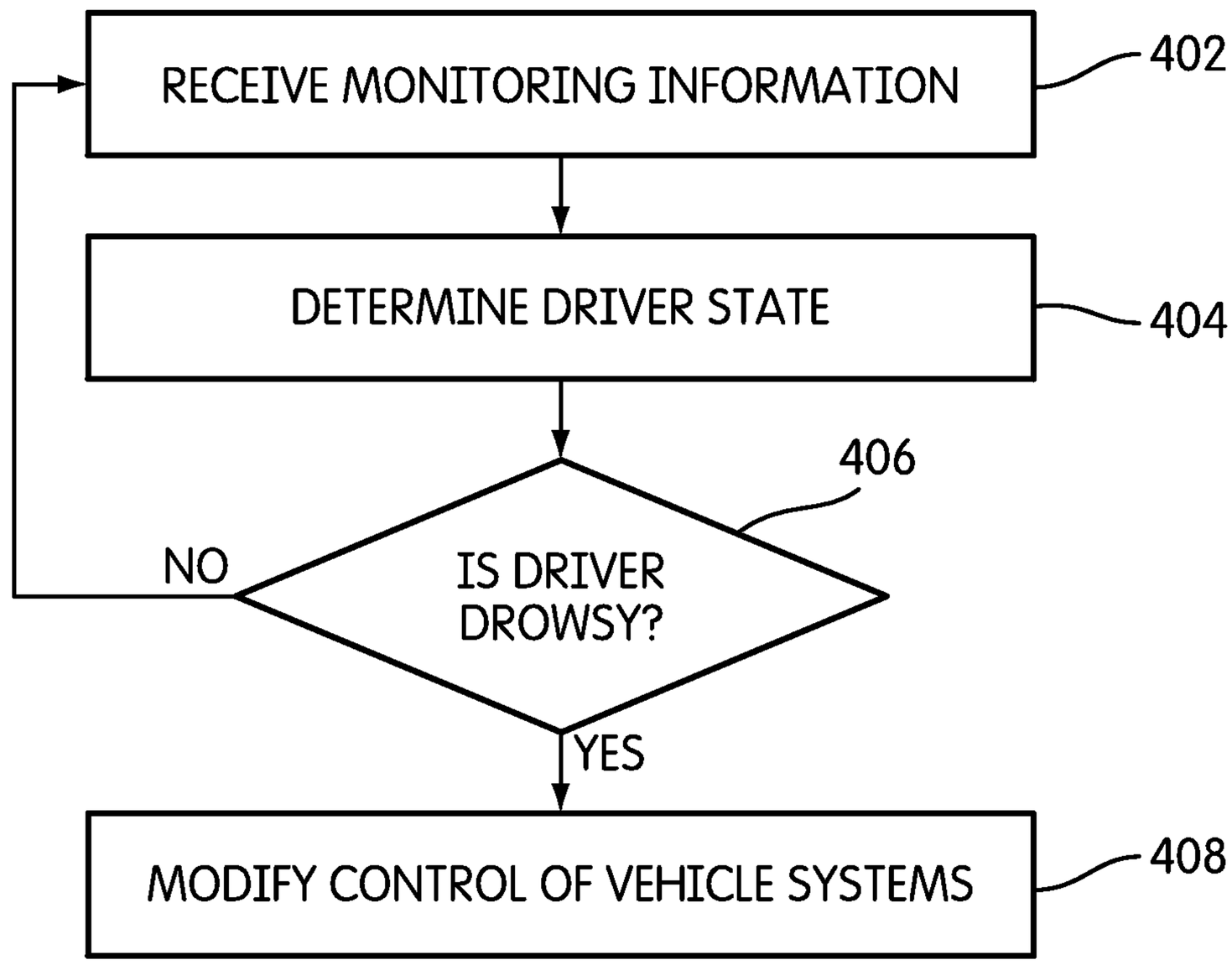
RECEIVE MONITORING INFORMATION
402
DETERMINE DRIVER STATE
404
406
NO
IS DRIVER DROWSY?
YES
MODIFY CONTROL OF VEHICLE SYSTEMS
408

FIG. 4

NO.	VEHICLE SYSTEMS (421)	RESPONSE SYSTEM IMPACT (422)	DRIVER'S BENEFIT (423)	TYPE OF IMPACT (424)
1	ELECTRONIC STABILITY CONTROL	ENHANCE STABILITY	COMPENSATE FOR DRIVER'S SLOWER REACTION TIME	CONTROL
2	ANTI-LOCK BRAKE	DECREASE STOPPING DISTANCE	COMPENSATE FOR DRIVER'S SLOWER REACTION TIME	CONTROL
3	BRAKE ASSIST	APPLY BRAKE FORCE QUICKER	COMPENSATE FOR DRIVER'S SLOWER REACTION TIME	CONTROL
4	BRAKE PREFILL SYSTEM	PREPARE BRAKE FOR QUICKER RESPONSE	COMPENSATE FOR DRIVER'S SLOWER REACTION TIME	CONTROL
5	LOW SPEED FOLLOW	DISABLE FUNCTION	PROTECT FOR DRIVER'S ATTENTION LAPSE	CONTROL
6	CRUISE CONTROL	DISABLE FUNCTION	PROTECT FOR DRIVER'S ATTENTION LAPSE	CONTROL
7	COLLISION WARNING	WARN SOONER	PROTECT FOR DRIVER'S ATTENTION LAPSE	WARNING
8	COLLISION MITIGATION BRAKING SYSTEM	WARN SOONER	PROTECT FOR DRIVER'S ATTENTION LAPSE	WARNING
9	AUTO CRUISE CONTROL	INCREASE VEHICLE GAP	PROTECT FOR DRIVER'S ATTENTION LAPSE	WARNING
10	LANE DEPARTURE WARNING	WARN SOONER	PROTECT FOR DRIVER'S ATTENTION LAPSE	WARNING
11	BLIND SPOT INDICATOR	WARN SOONER	PROTECT FOR DRIVER'S ATTENTION LAPSE	WARNING
12	LANE KEEP ASSIST	DISABLE FUNCTION	PROTECT FOR DRIVER'S ATTENTION LAPSE	WARNING
13	NAVIGATION SYSTEM	DISABLE FUNCTION	PROTECT FOR DRIVER'S ATTENTION LAPSE	WARNING
14	ELECTRONIC POWER STEERING	DECREASE ASSISTANCE	SUPPLEMENT DRIVER'S ALERTNESS	CONTROL
15	VISUAL DEVICES	PROVIDE VISUAL ALERT	SUPPLEMENT DRIVER'S ALERTNESS	WARNING
16	CLIMATE CONTROL	MODIFY CABIN TEMPERATURE	SUPPLEMENT DRIVER'S ALERTNESS	WARNING
17	AUDIO DEVICES	PROVIDE AUDIBLE ALERT	SUPPLEMENT DRIVER'S ALERTNESS	WARNING
18	ELECTRONIC PRETENSIONING SYSTEM	PROVIDE TACTILE FEEDBACK	SUPPLEMENT DRIVER'S ALERTNESS	WARNING
19	TACTILE DEVICES	PROVIDE TACTILE FEEDBACK	SUPPLEMENT DRIVER'S ALERTNESS	WARNING

FIG. 5

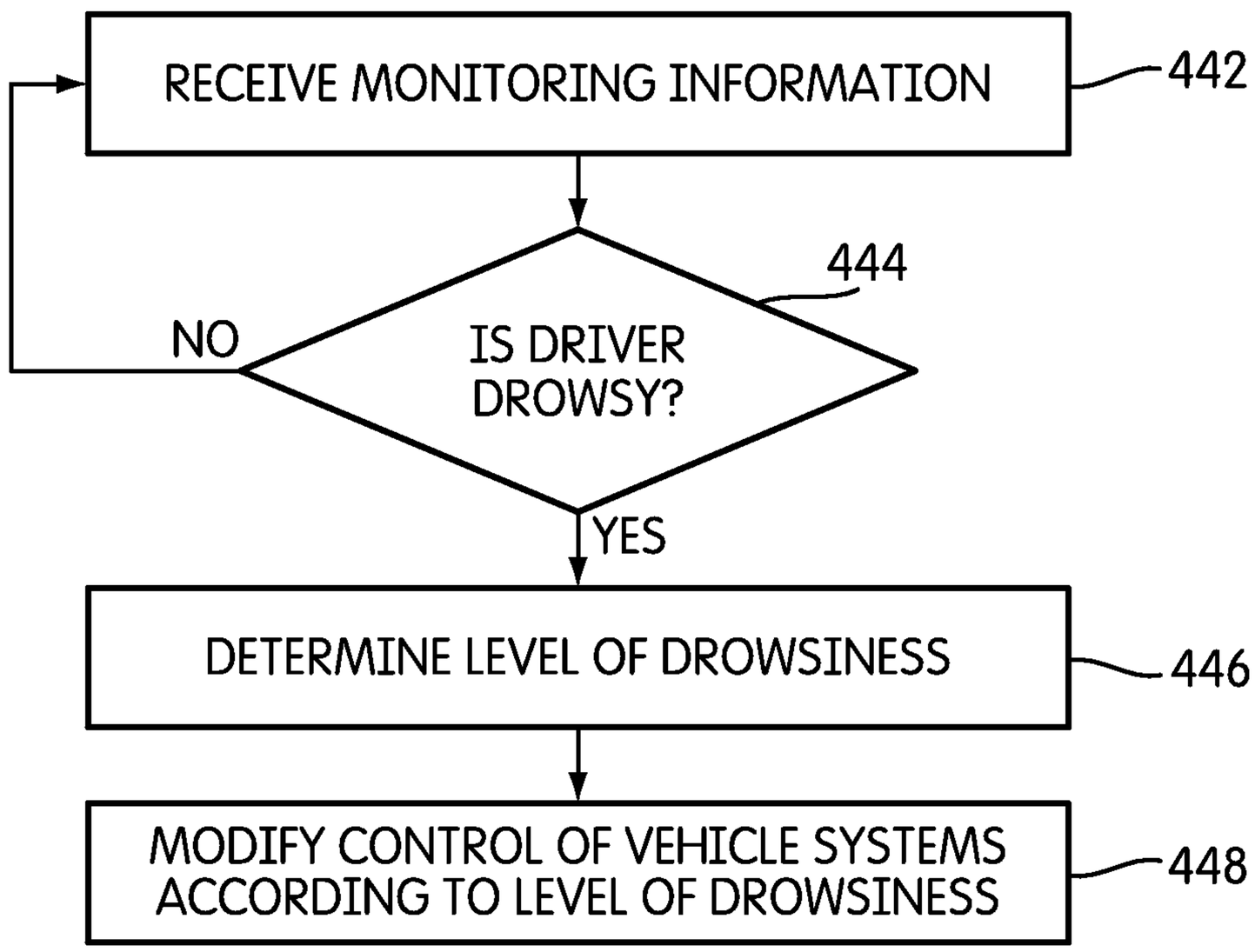
RECEIVE MONITORING INFORMATION
442
444
NO
IS DRIVER DROWSY?
YES
DETERMINE LEVEL OF DROWSINESS
446
MODIFY CONTROL OF VEHICLE SYSTEMS ACCORDING TO LEVEL OF DROWSINESS
448

FIG. 6

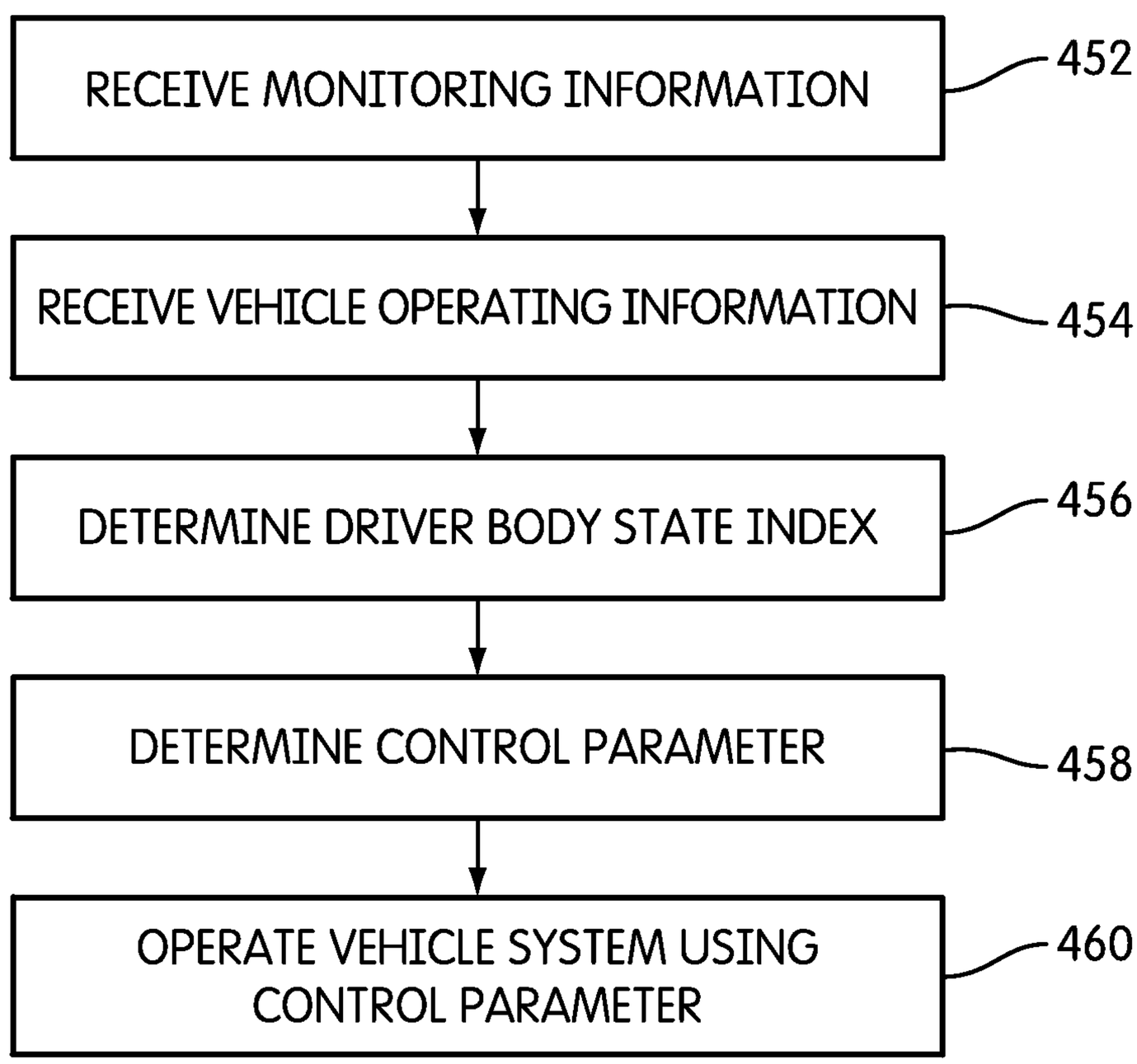
RECEIVE MONITORING INFORMATION
452
RECEIVE VEHICLE OPERATING INFORMATION
454
DETERMINE DRIVER BODY STATE INDEX
456
DETERMINE CONTROL PARAMETER
458
OPERATE VEHICLE SYSTEM USING CONTROL PARAMETER
460

FIG. 7

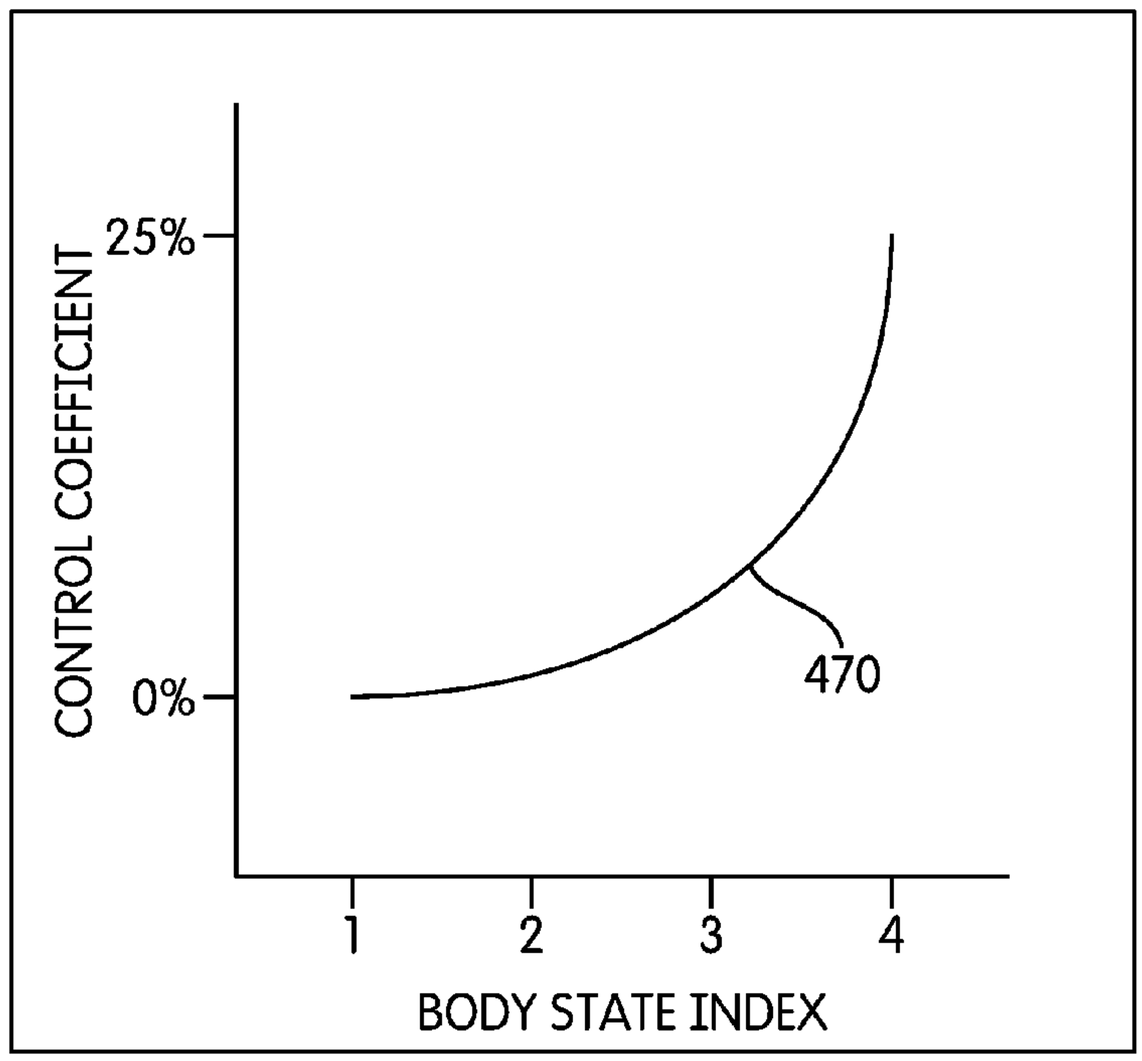
CONTROL COEFFICIENT
25%
0%
470
1
2
3
4
BODY STATE INDEX

FIG. 8

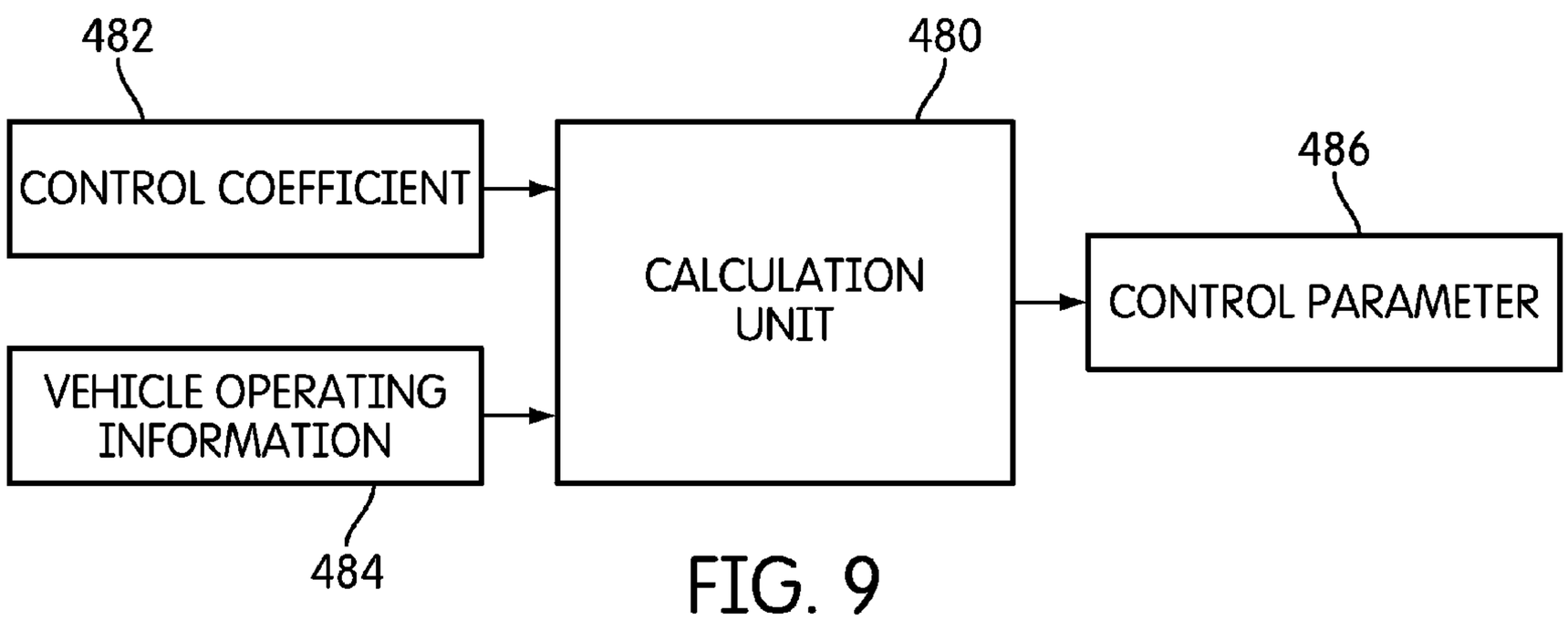
482
CONTROL COEFFICIENT
VEHICLE OPERATING INFORMATION
484
480
CALCULATION UNIT
486
CONTROL PARAMETER

FIG. 9

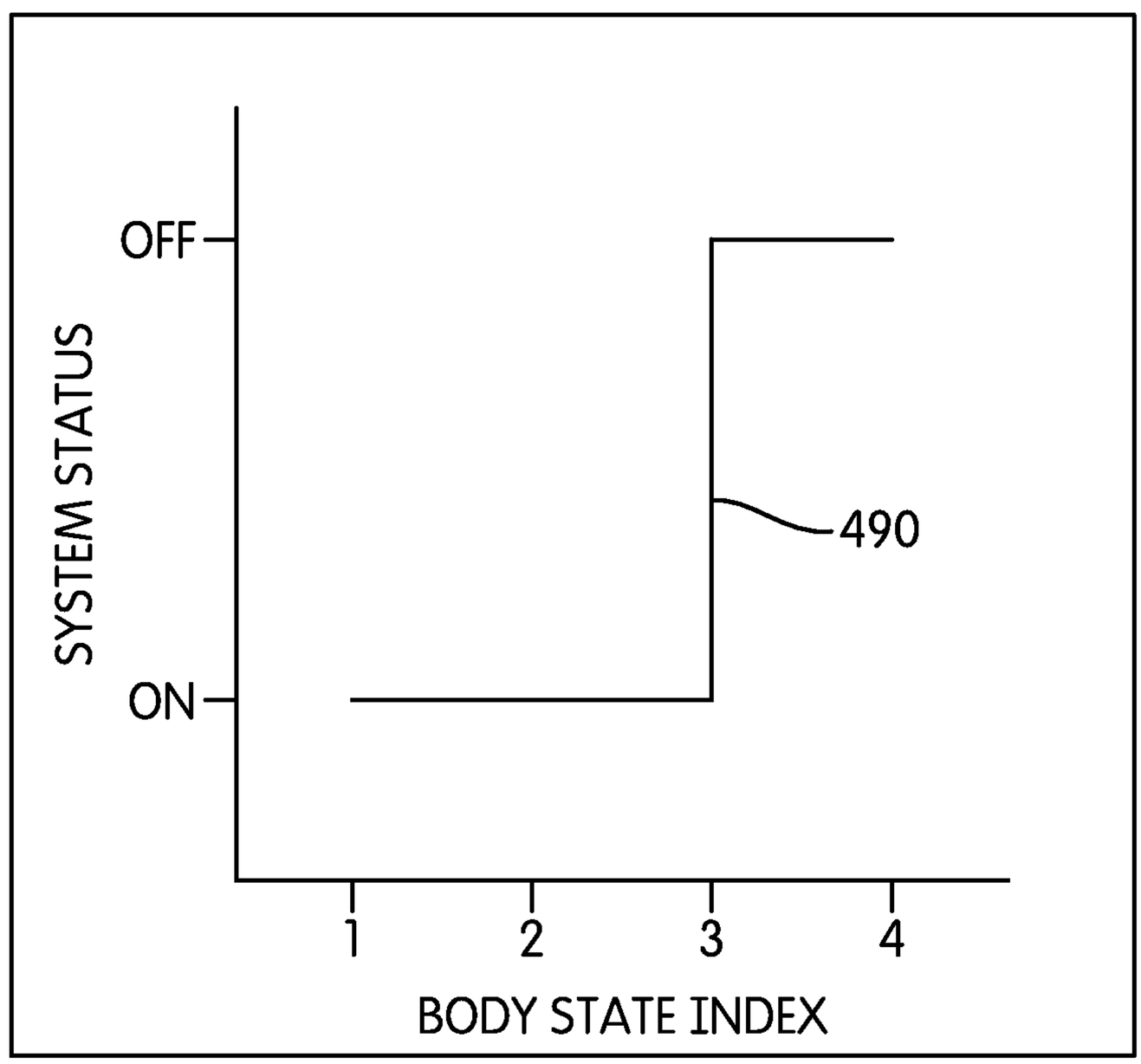

FIG. 10

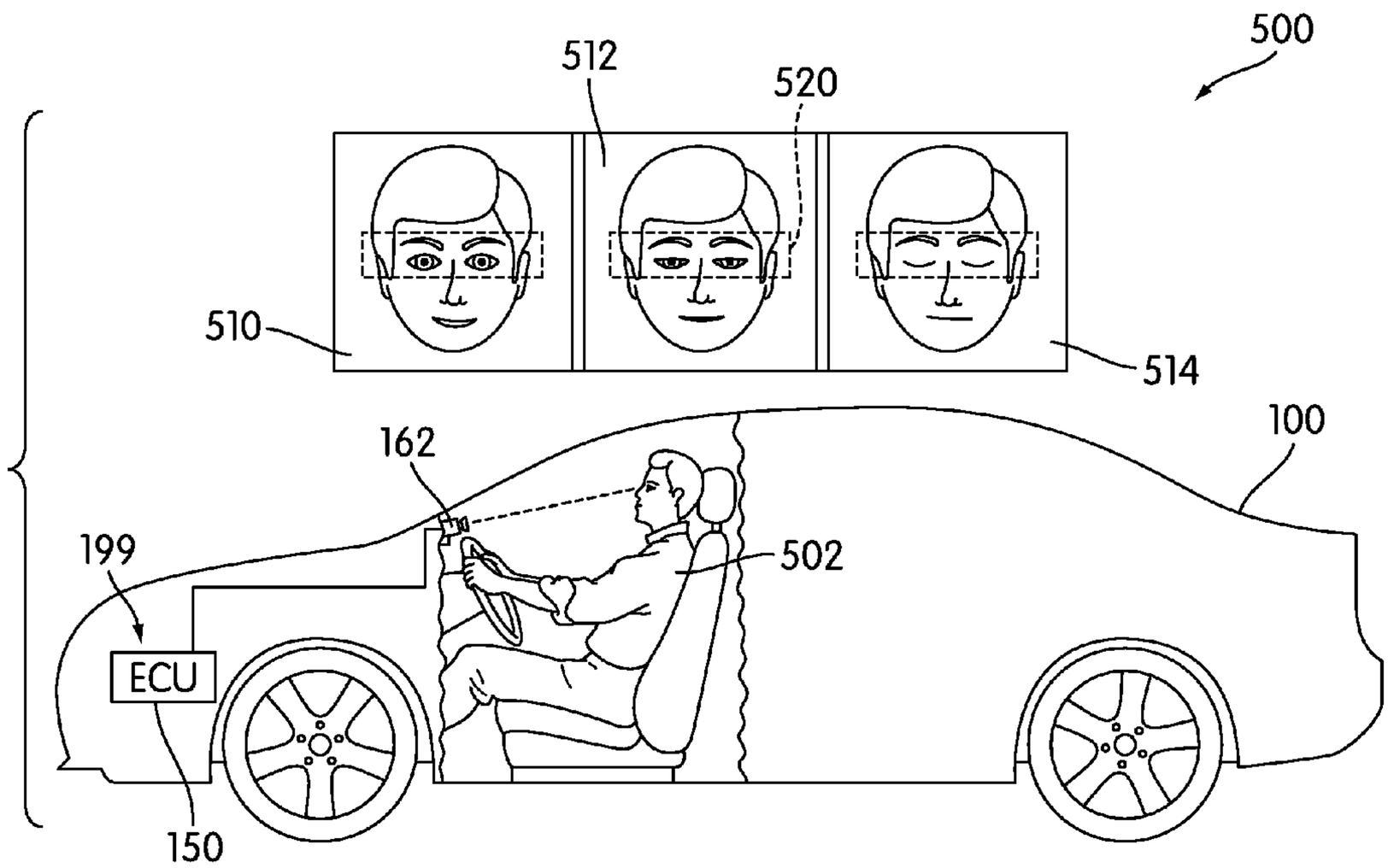
500
512
520
510
514
100
162
199
502
ECU
150

FIG. 11

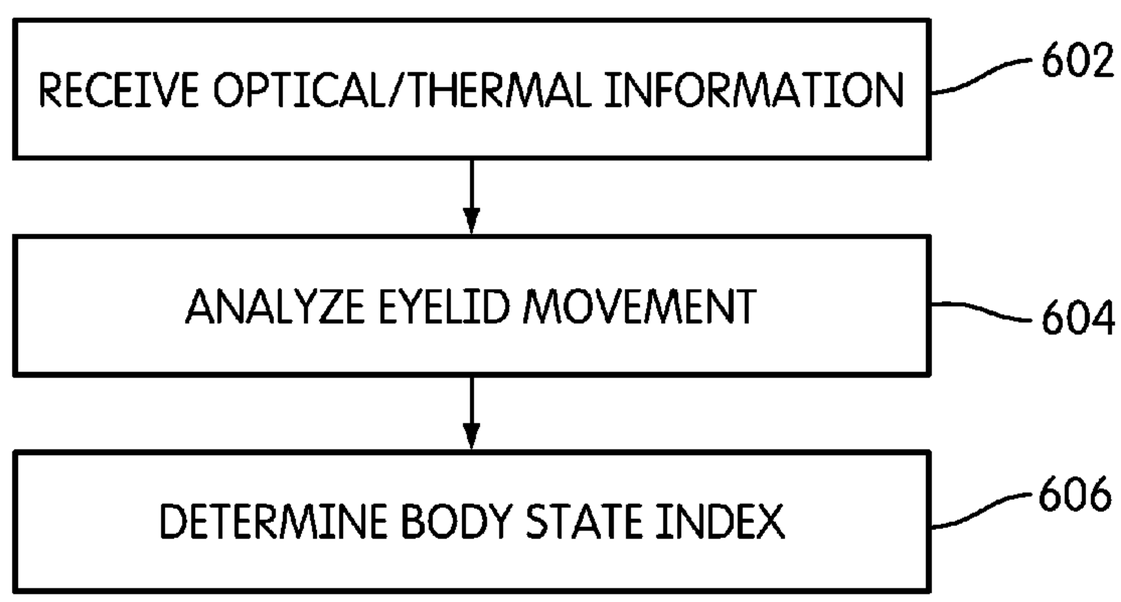
RECEIVE OPTICAL/THERMAL INFORMATION
602
ANALYZE EYELID MOVEMENT
604
DETERMINE BODY STATE INDEX
606

FIG. 12

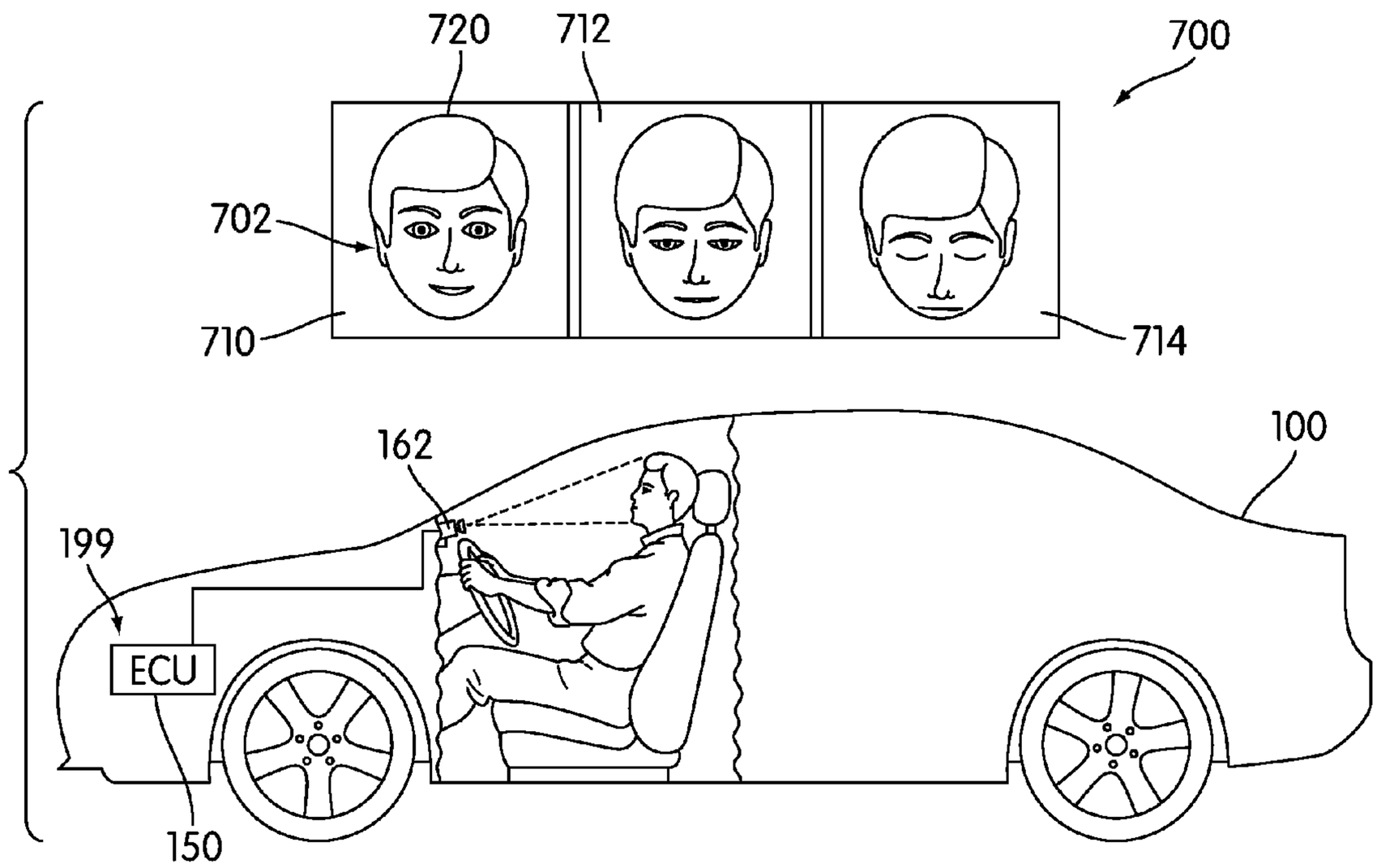
720
712
700
702
710
714
162
100
199
ECU
150

FIG. 13

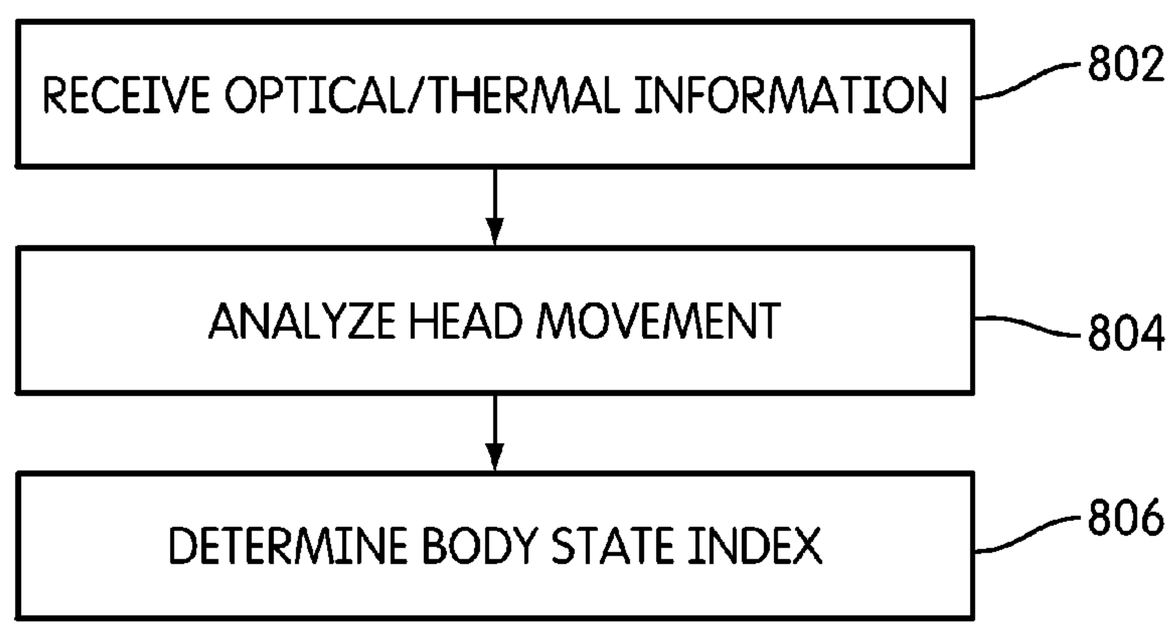
RECEIVE OPTICAL/THERMAL INFORMATION
802
ANALYZE HEAD MOVEMENT
804
DETERMINE BODY STATE INDEX
806

FIG. 14

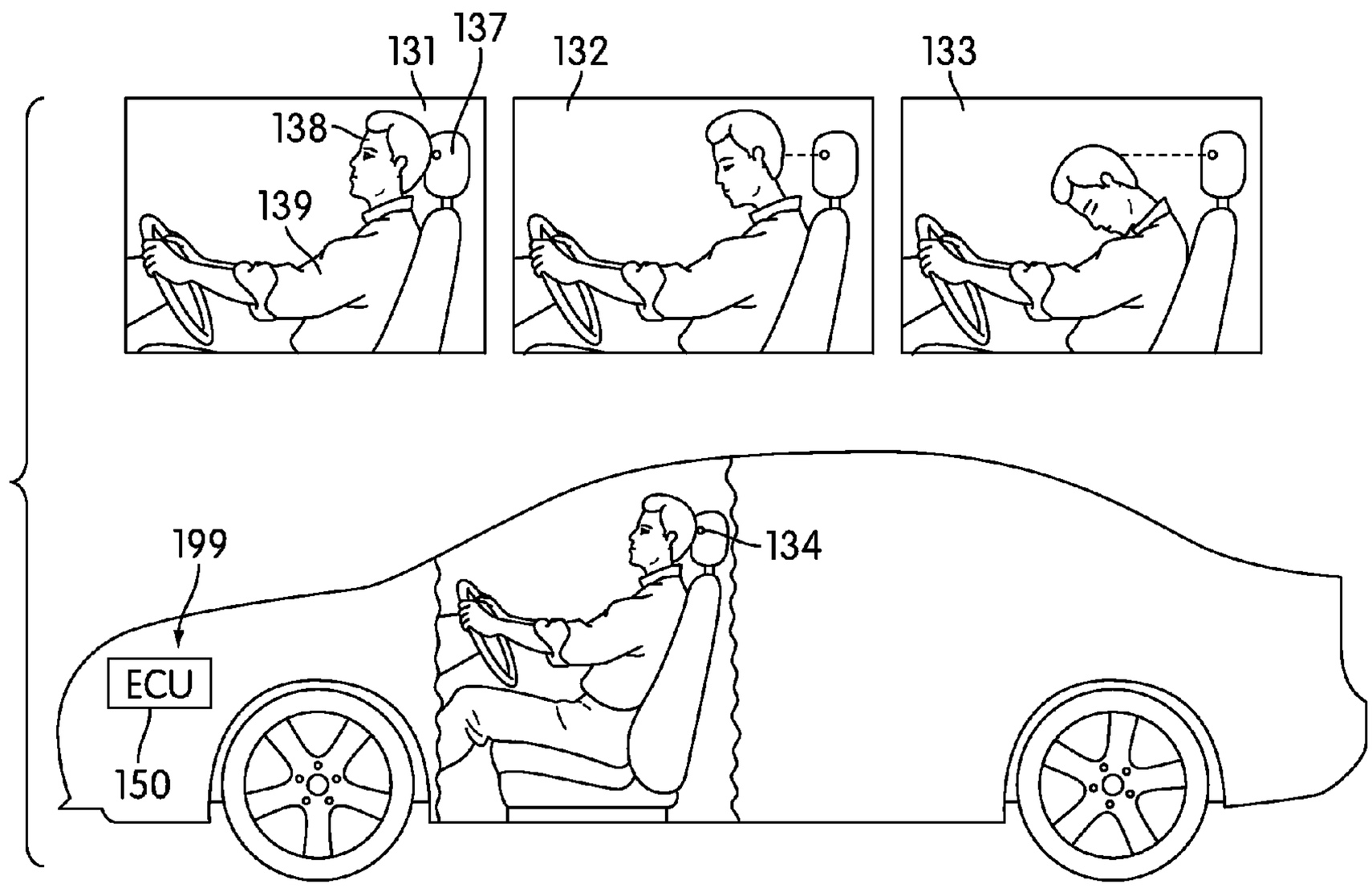
131
137
132
133
138
139
199
134
ECU
150

FIG. 15

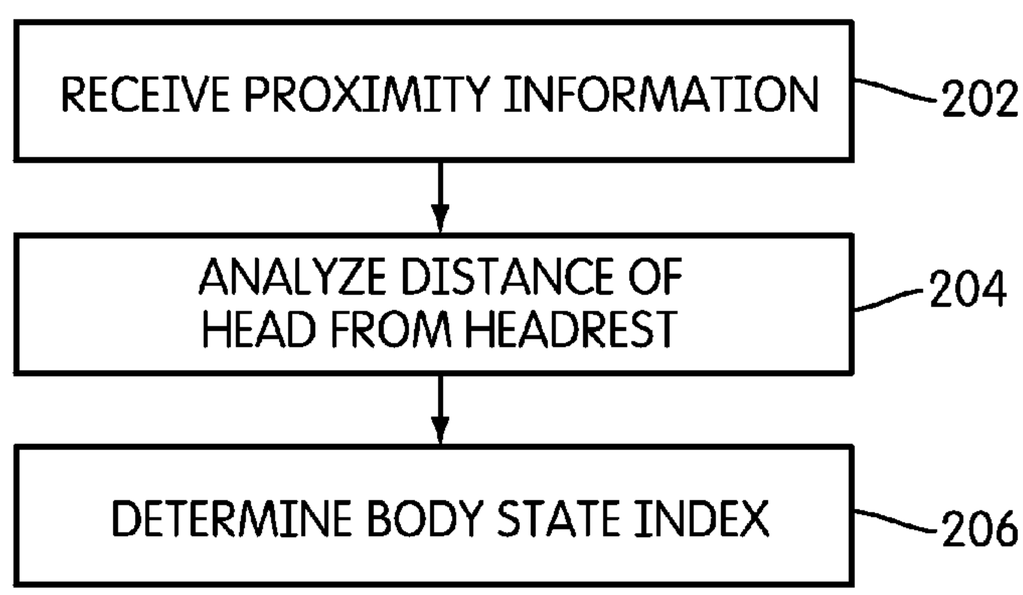
RECEIVE PROXIMITY INFORMATION
202
ANALYZE DISTANCE OF HEAD FROM HEADREST
204
DETERMINE BODY STATE INDEX
206

FIG. 16

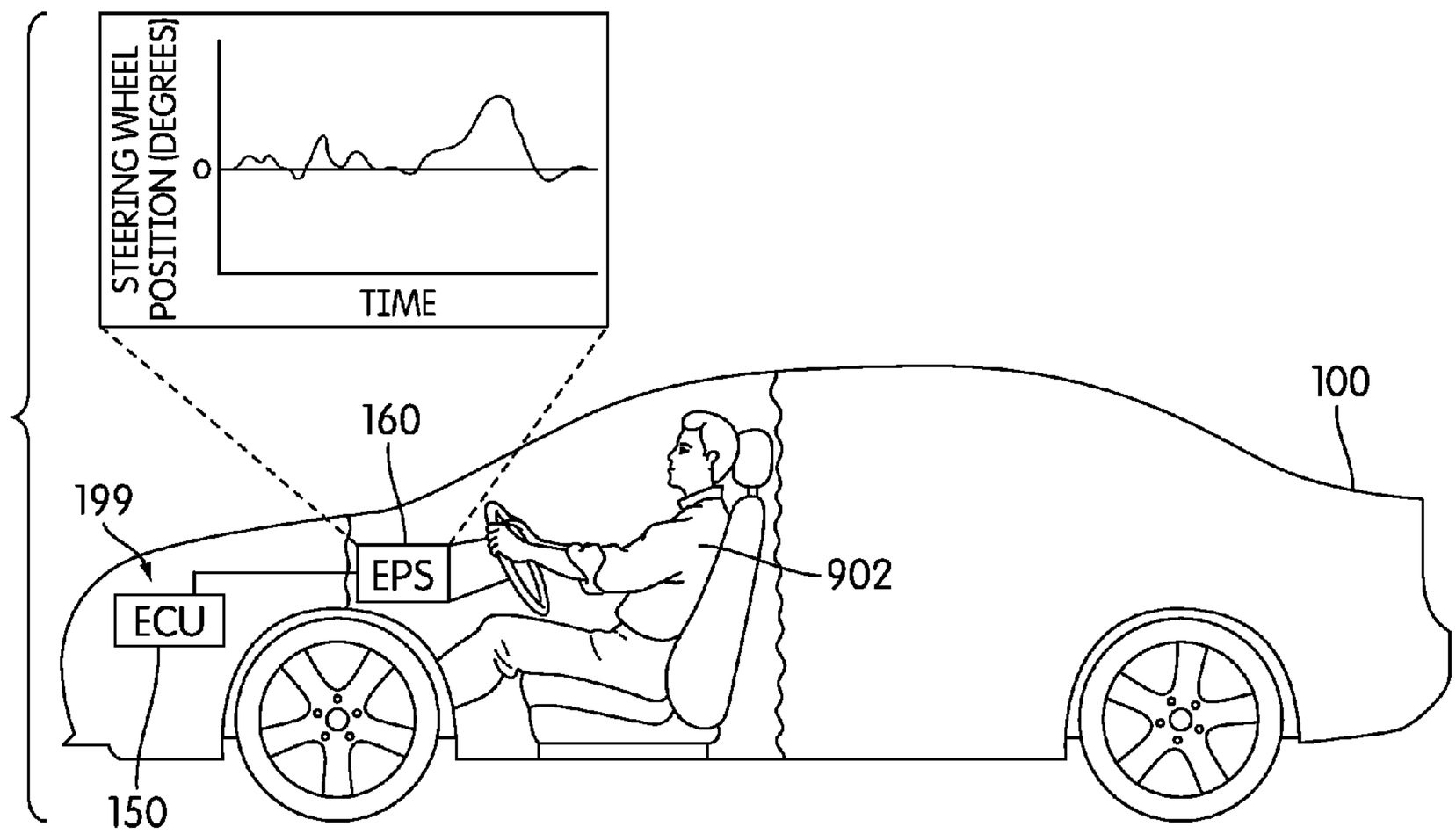
STEERING WHEEL POSITION (DEGREES)
0
TIME
100
160
199
EPS
ECU
902
150

FIG. 17

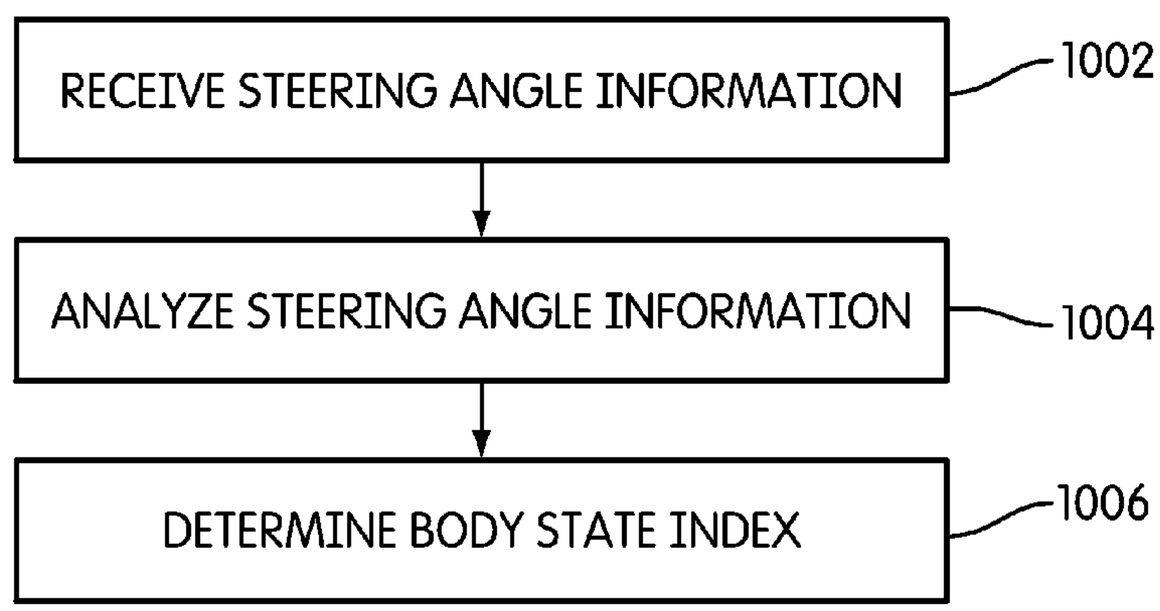
RECEIVE STEERING ANGLE INFORMATION
1002
ANALYZE STEERING ANGLE INFORMATION
1004
DETERMINE BODY STATE INDEX
1006

FIG. 18

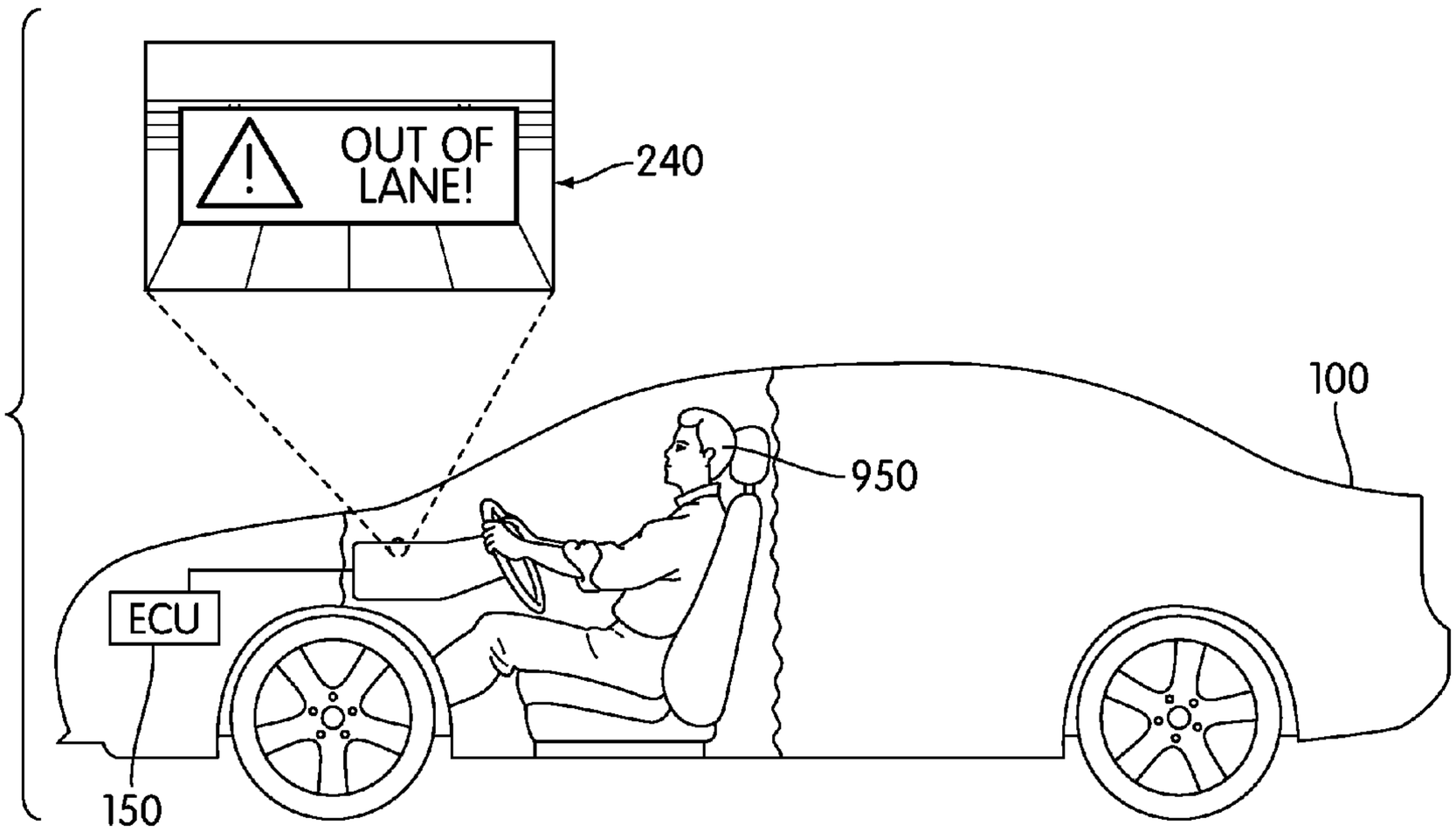
OUT OF LANE!
240
100
950
ECU
150

FIG. 19

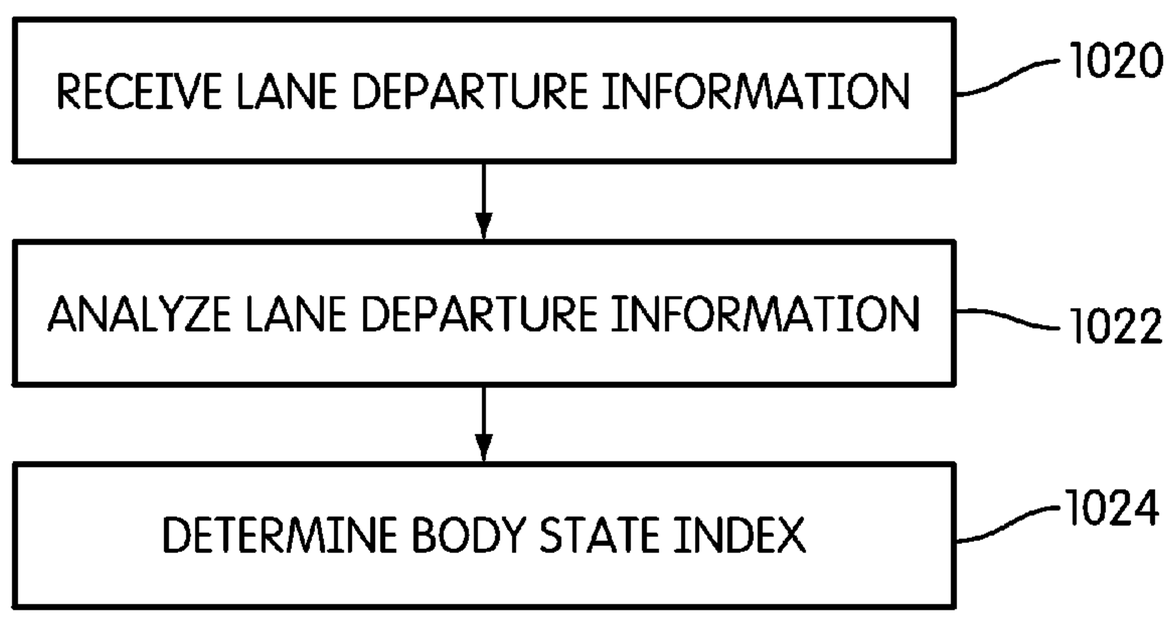
RECEIVE LANE DEPARTURE INFORMATION
1020
ANALYZE LANE DEPARTURE INFORMATION
1022
DETERMINE BODY STATE INDEX
1024

FIG. 20

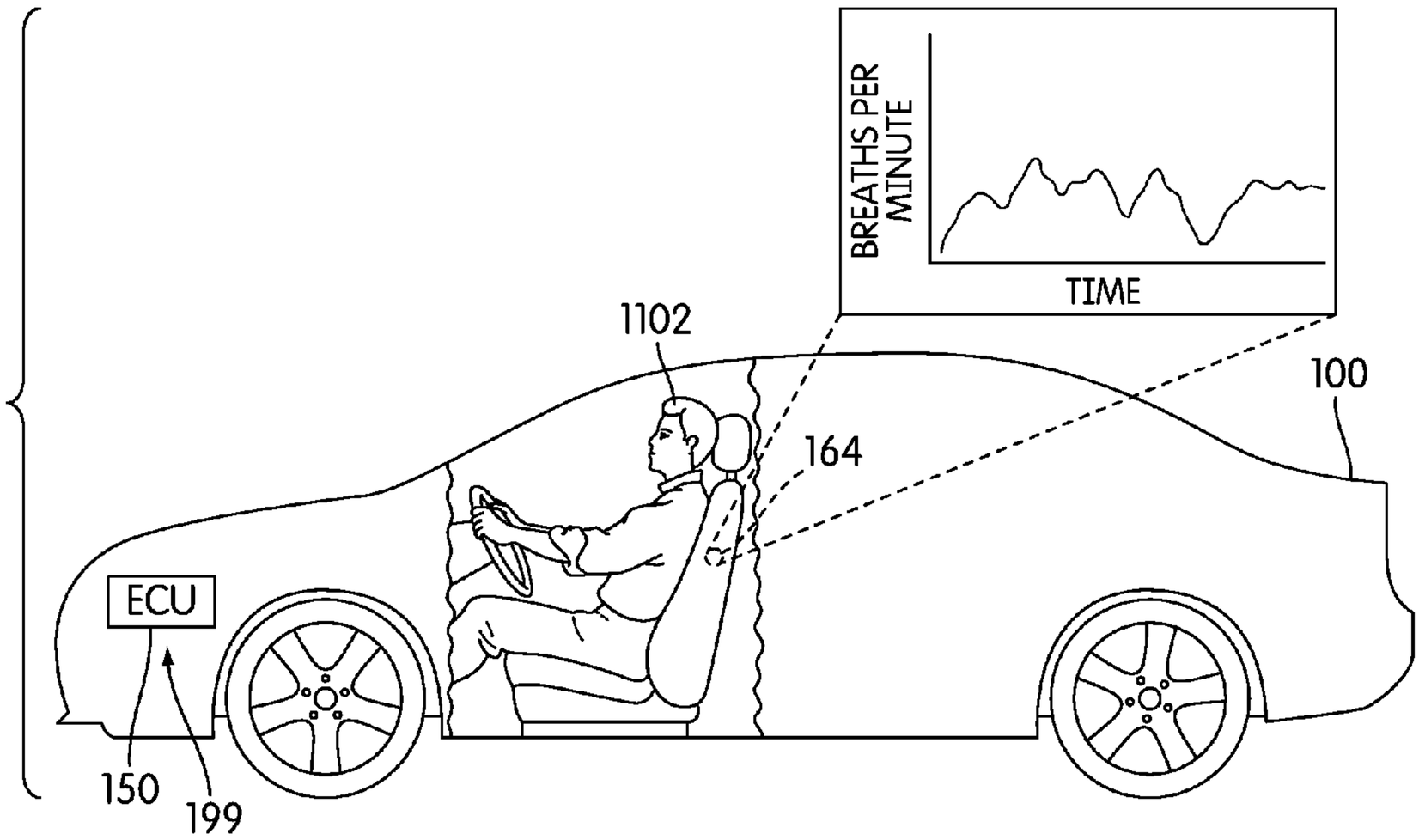
BREATHS PER MINUTE
TIME
1102
100
164
ECU
150
199

FIG. 21

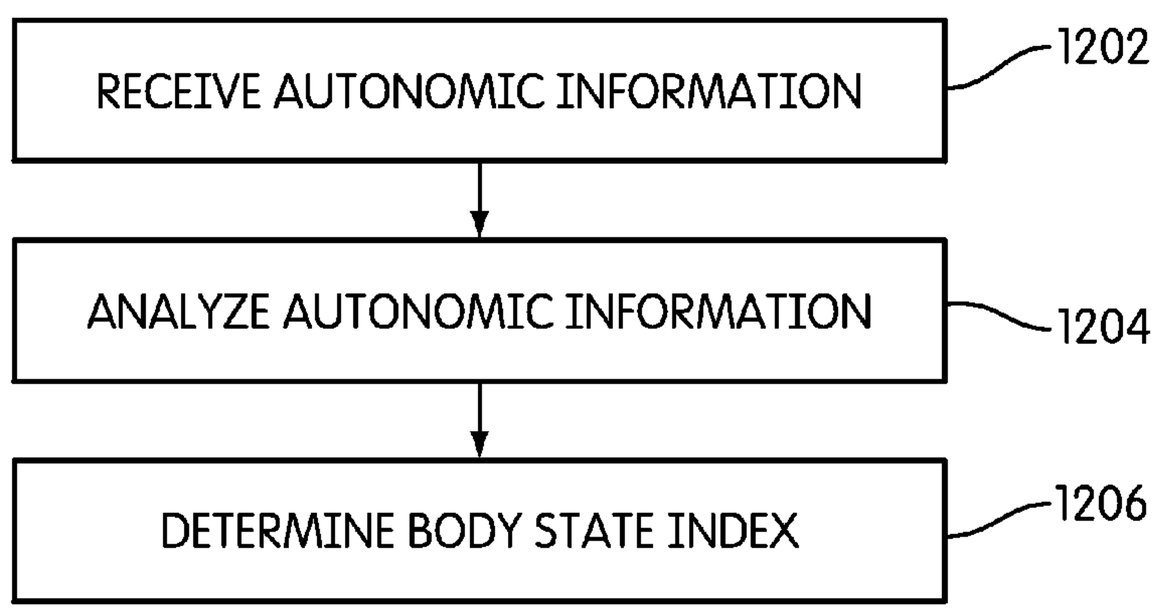
RECEIVE AUTONOMIC INFORMATION
1202
ANALYZE AUTONOMIC INFORMATION
1204
DETERMINE BODY STATE INDEX
1206

FIG. 22

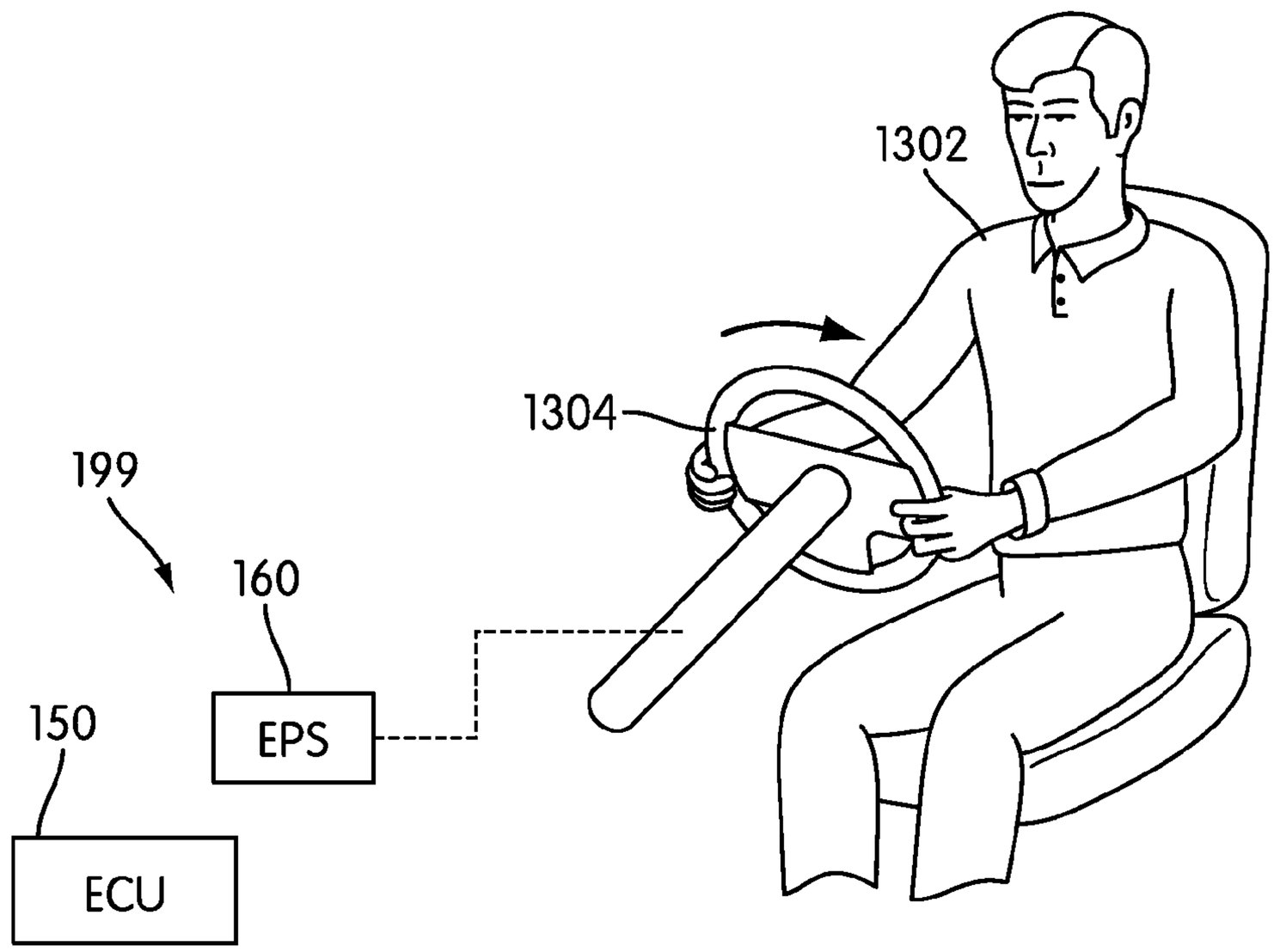

FIG. 23

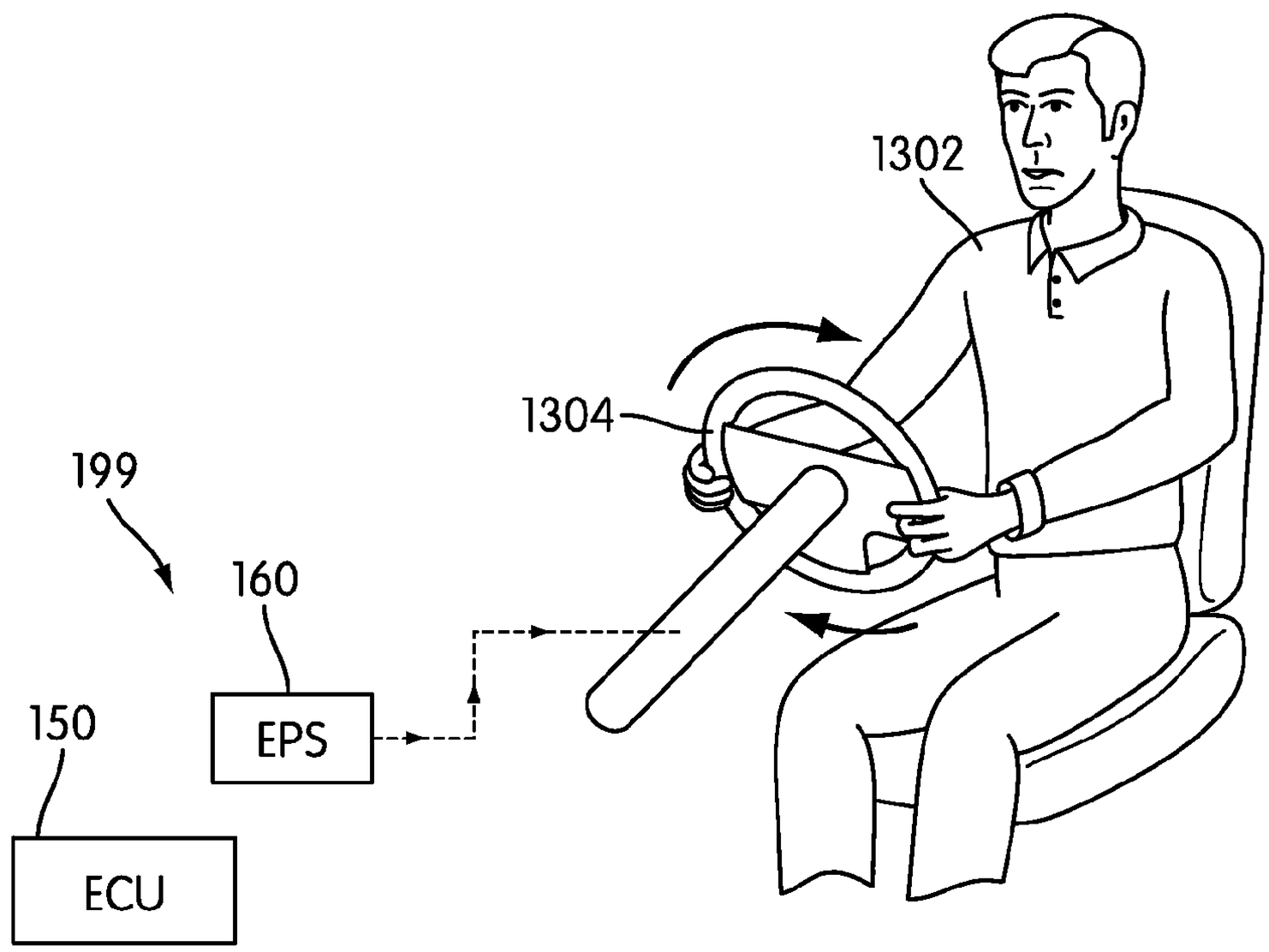

FIG. 24

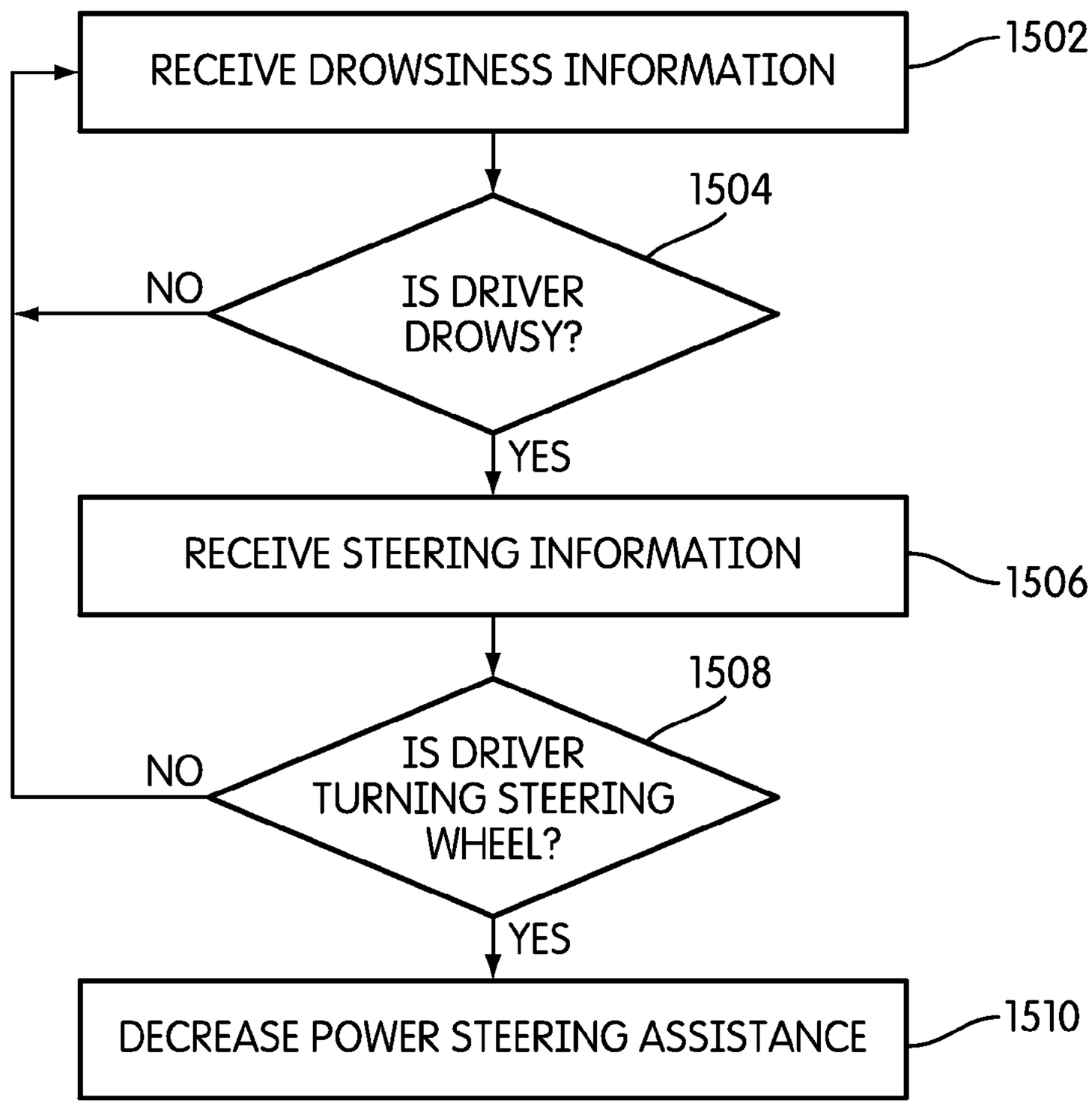
RECEIVE DROWSINESS INFORMATION
1502
1504
IS DRIVER DROWSY?
NO
YES
RECEIVE STEERING INFORMATION
1506
1508
IS DRIVER TURNING STEERING WHEEL?
NO
YES
DECREASE POWER STEERING ASSISTANCE
1510

FIG. 25

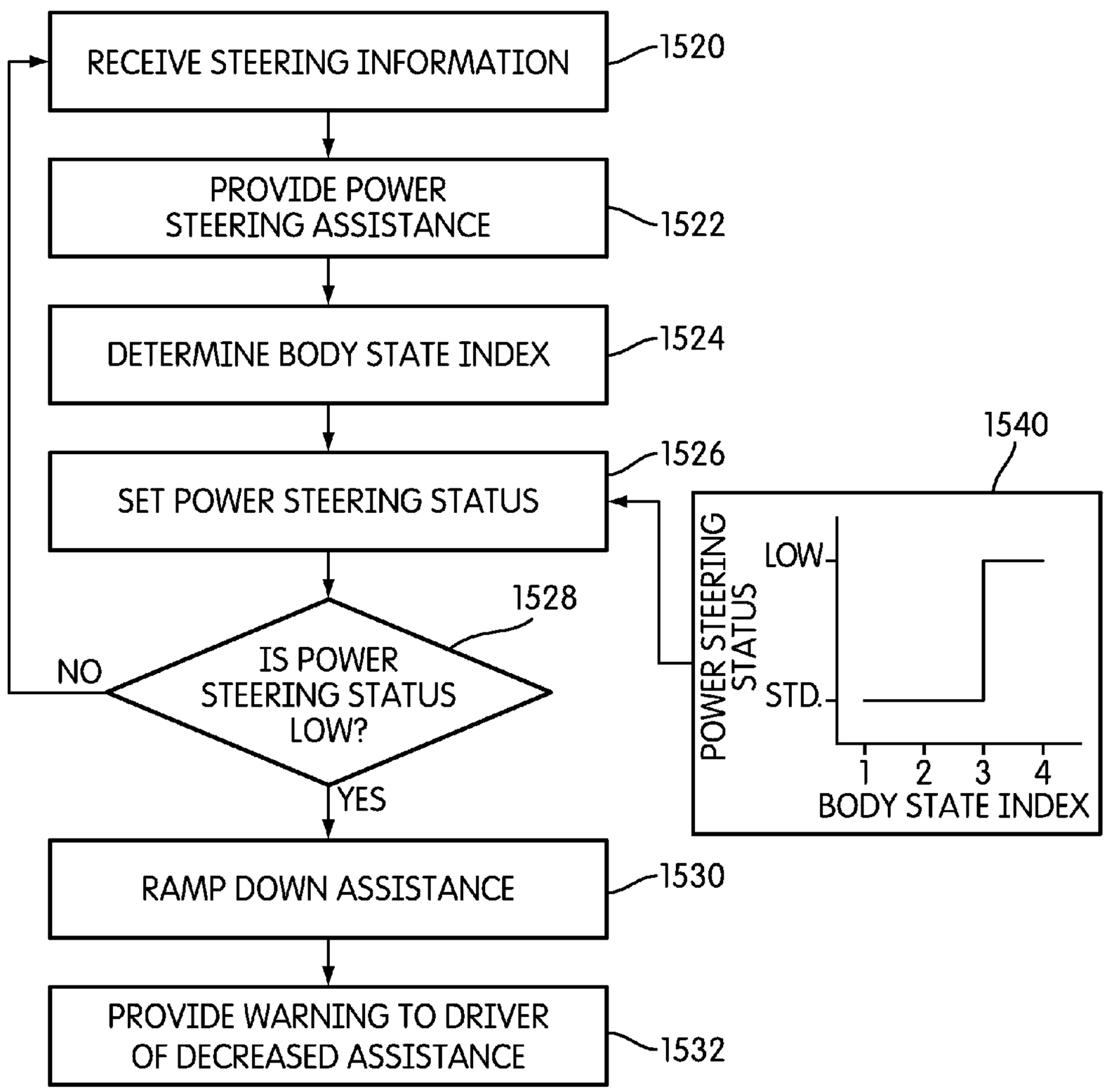
RECEIVE STEERING INFORMATION
1520
PROVIDE POWER STEERING ASSISTANCE
1522
DETERMINE BODY STATE INDEX
1524
SET POWER STEERING STATUS
1526
1540
POWER STEERING STATUS
LOW
STD.
1 2 3 4
BODY STATE INDEX
IS POWER STEERING STATUS LOW?
1528
NO
YES
RAMP DOWN ASSISTANCE
1530
PROVIDE WARNING TO DRIVER OF DECREASED ASSISTANCE
1532

FIG. 26

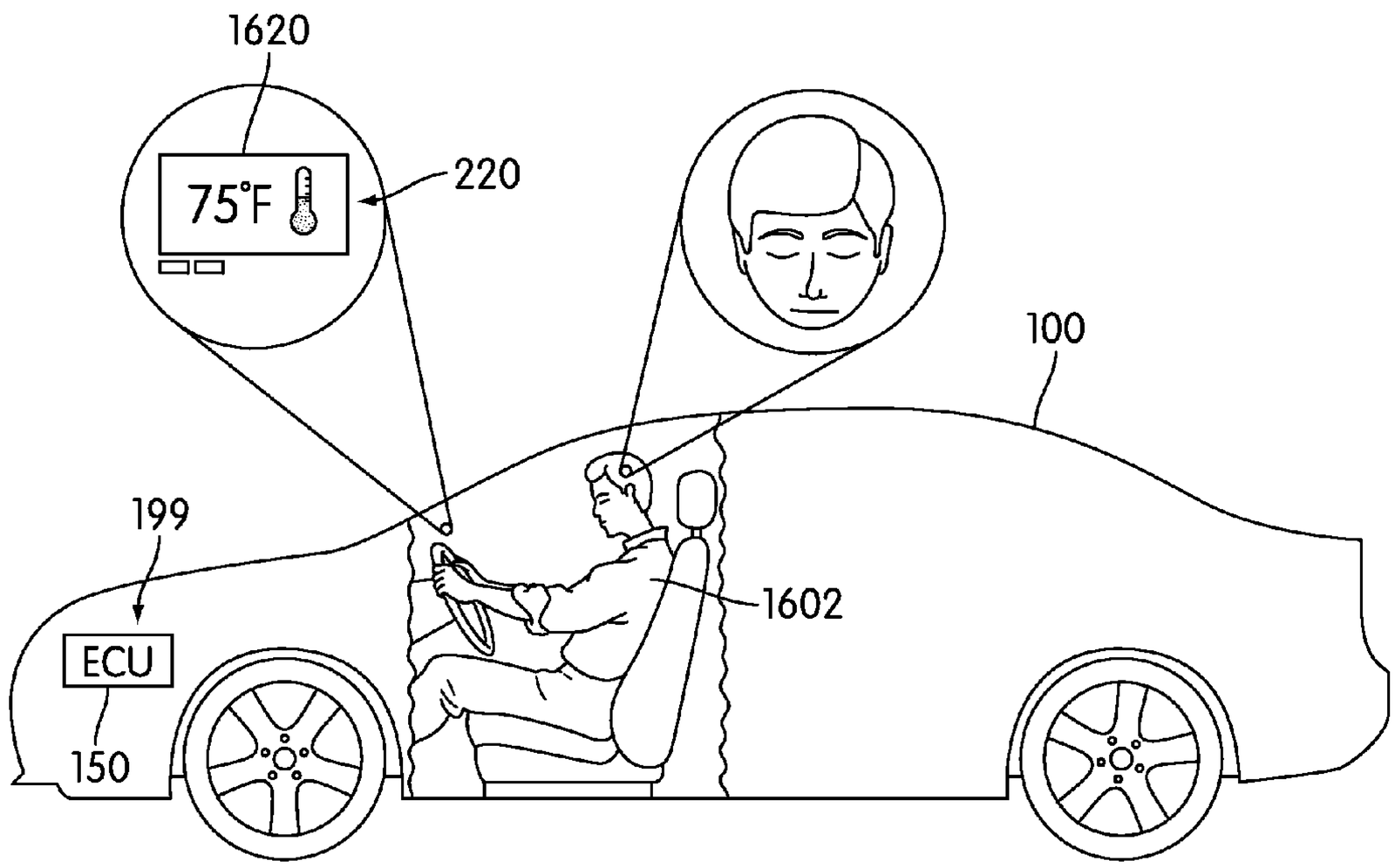
1620
75°F
220
100
199
ECU
150
1602

FIG. 27

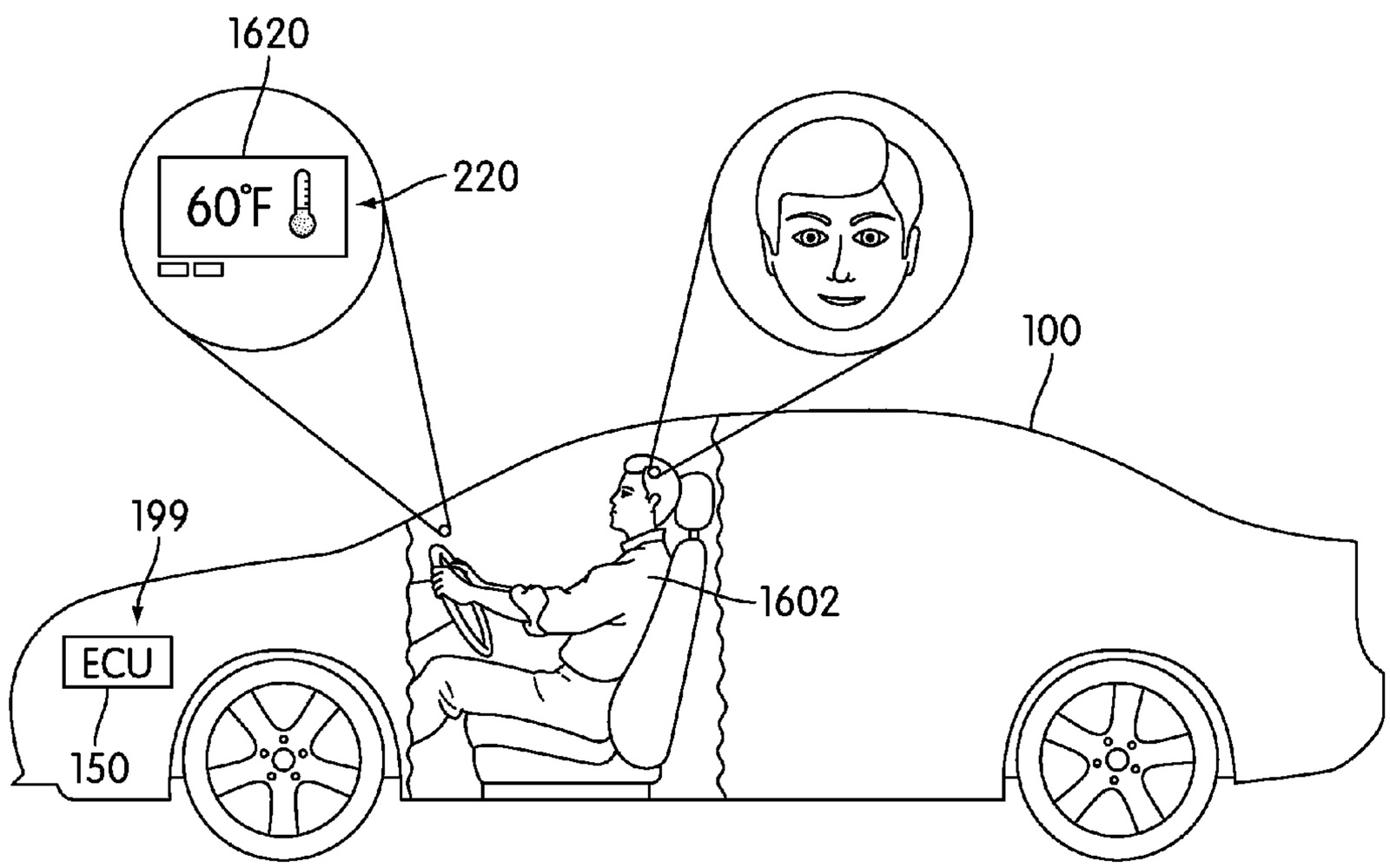
1620
60°F
220
100
199
ECU
150
1602

FIG. 28

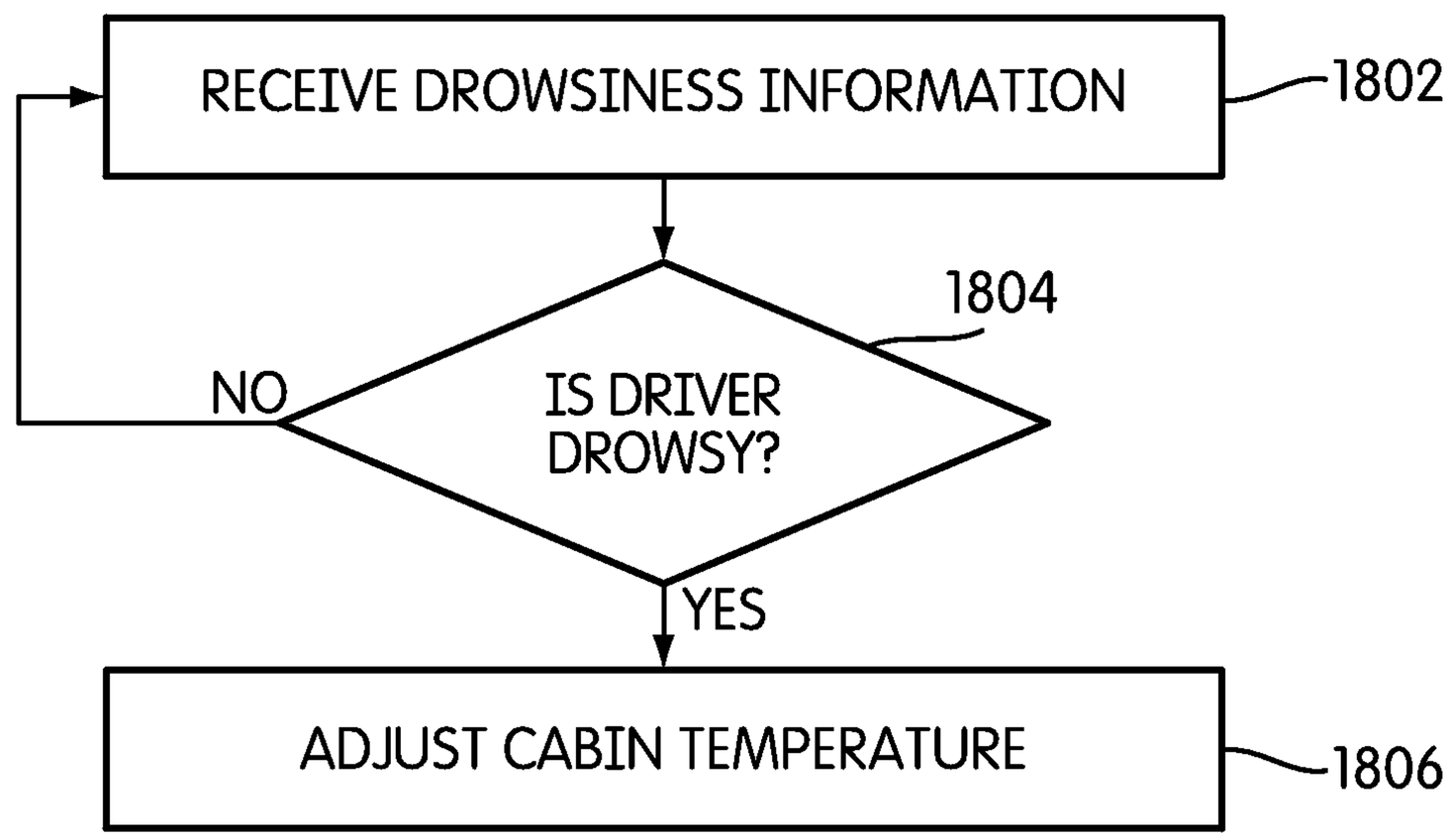
RECEIVE DROWSINESS INFORMATION
1802
1804
NO
IS DRIVER DROWSY?
YES
ADJUST CABIN TEMPERATURE
1806

FIG. 29

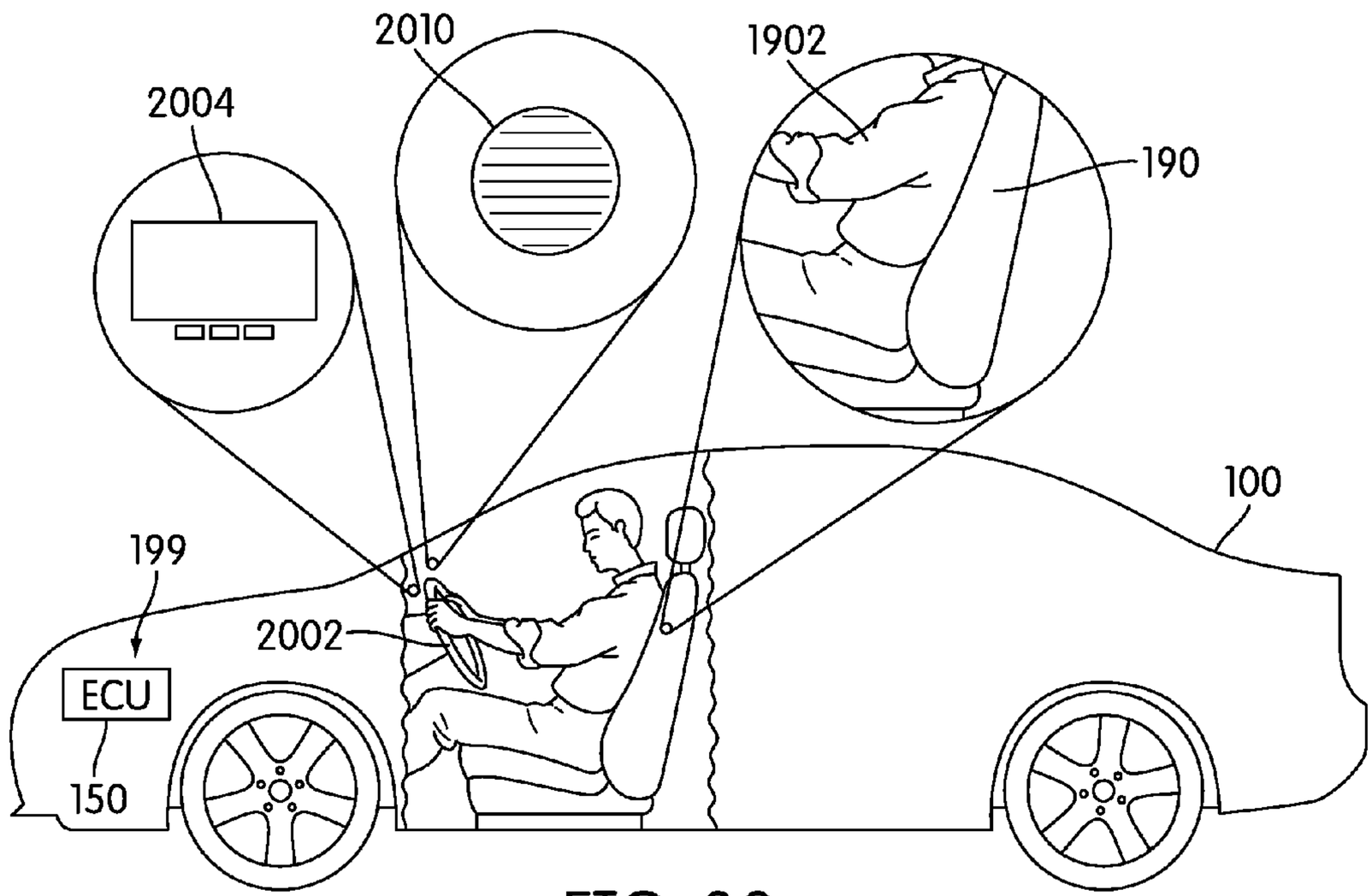
2010
1902
2004
190
100
199
2002
ECU
150

FIG. 30

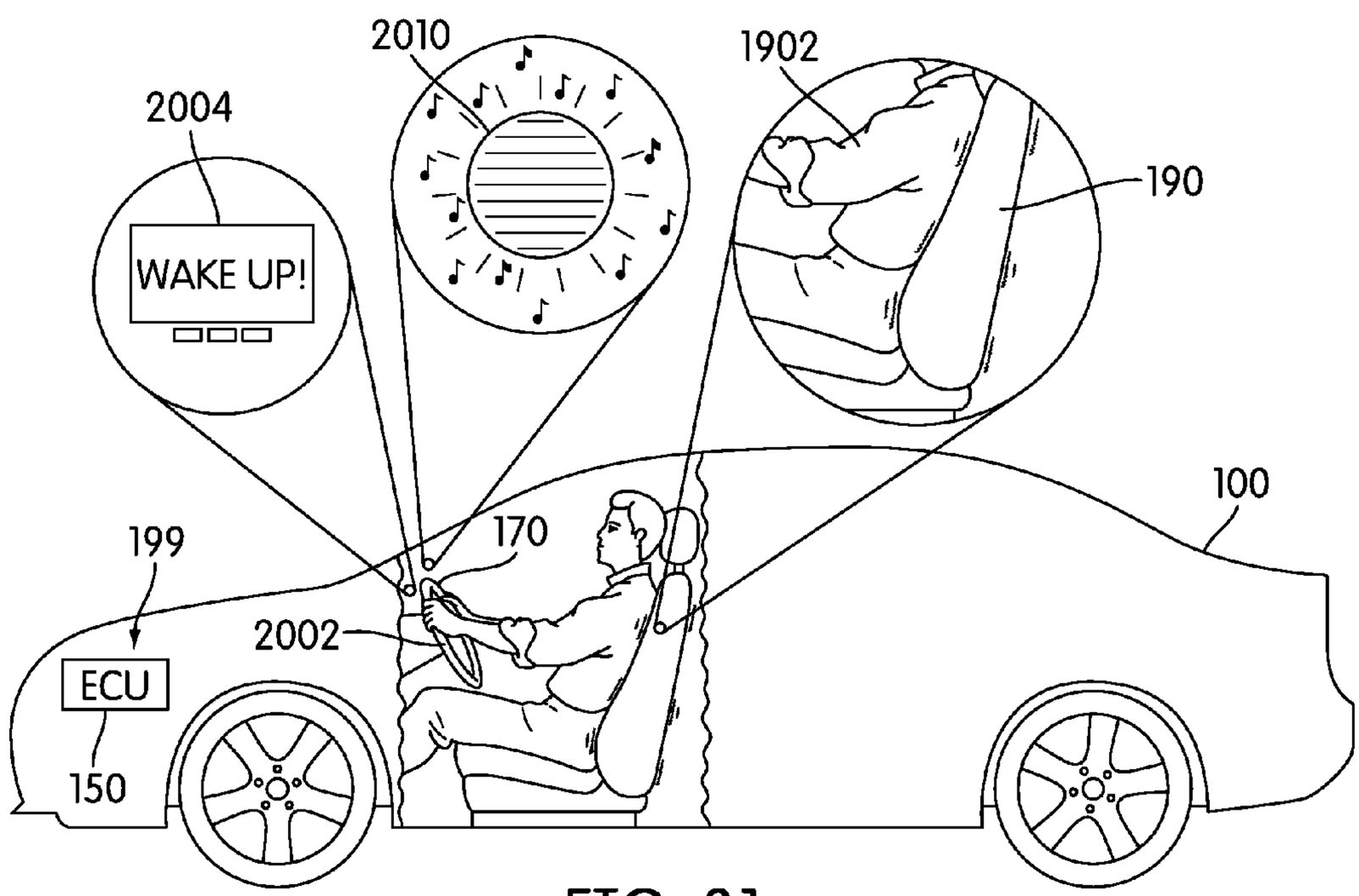
2010
1902
2004
WAKE UP!
190
100
199
170
2002
ECU
150

FIG. 31

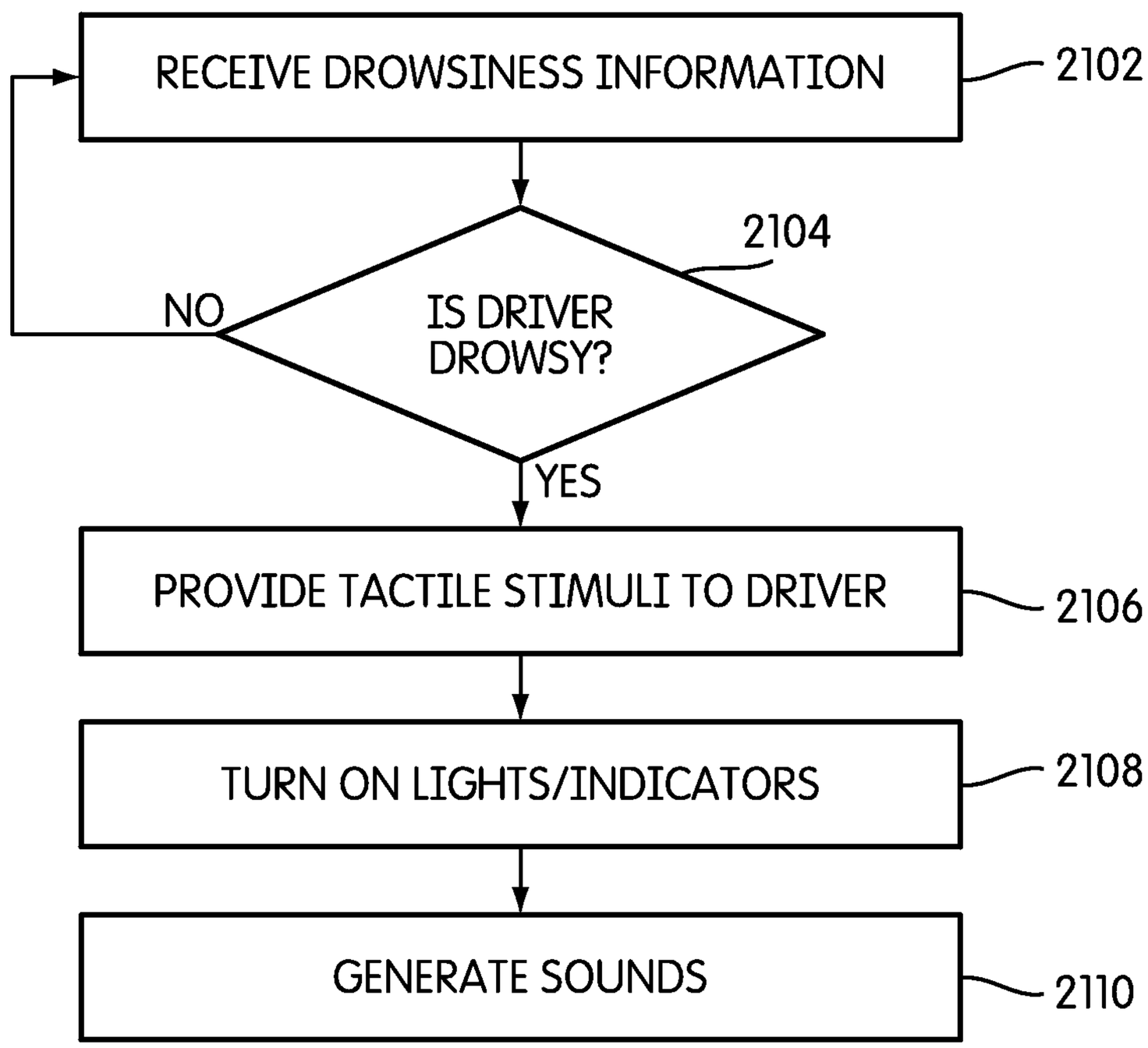
RECEIVE DROWSINESS INFORMATION
2102
IS DRIVER DROWSY?
2104
NO
YES
PROVIDE TACTILE STIMULI TO DRIVER
2106
TURN ON LIGHTS/INDICATORS
2108
GENERATE SOUNDS
2110

FIG. 32

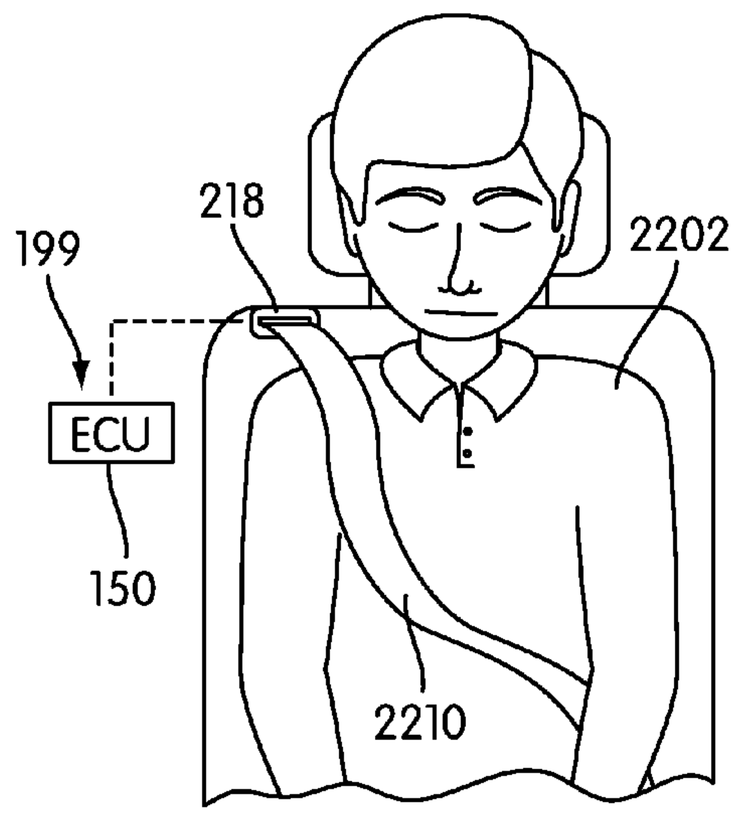

FIG. 33

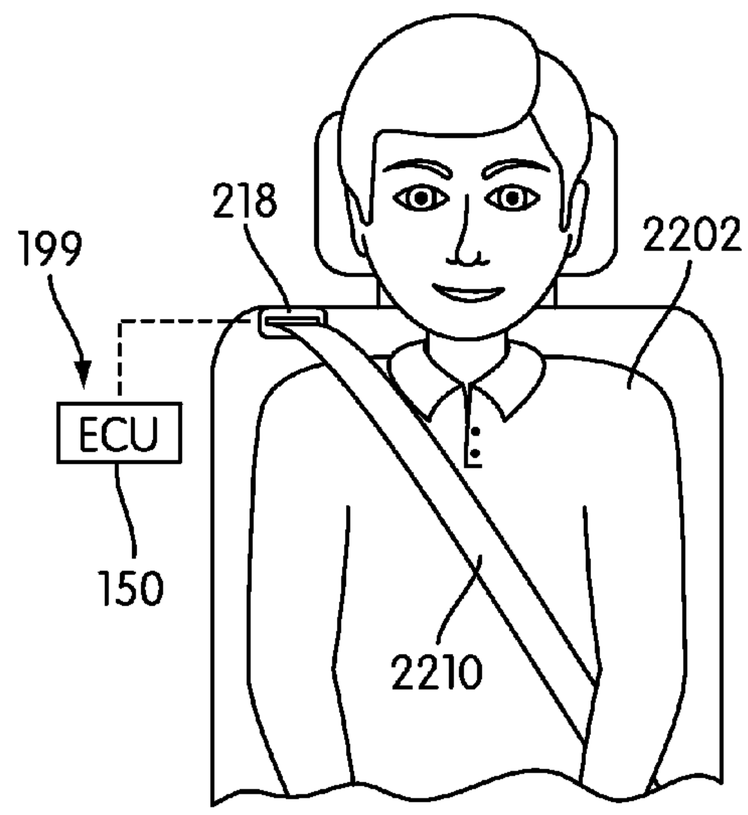

FIG. 34

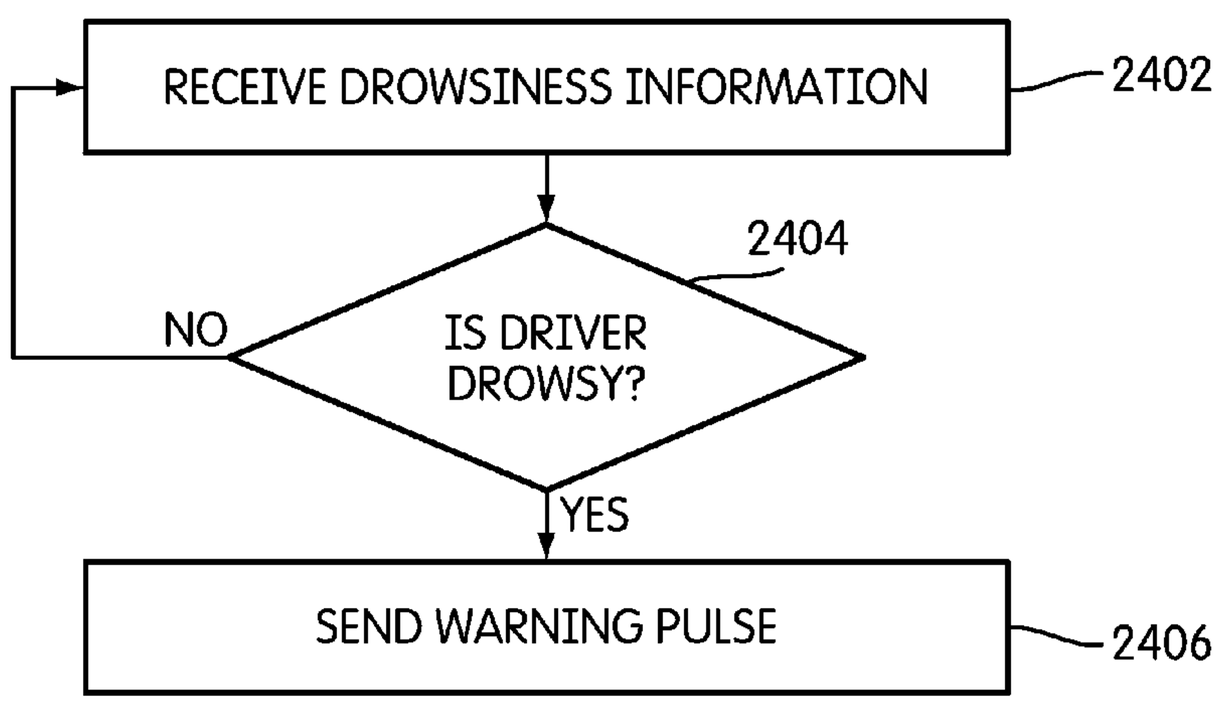

FIG. 35

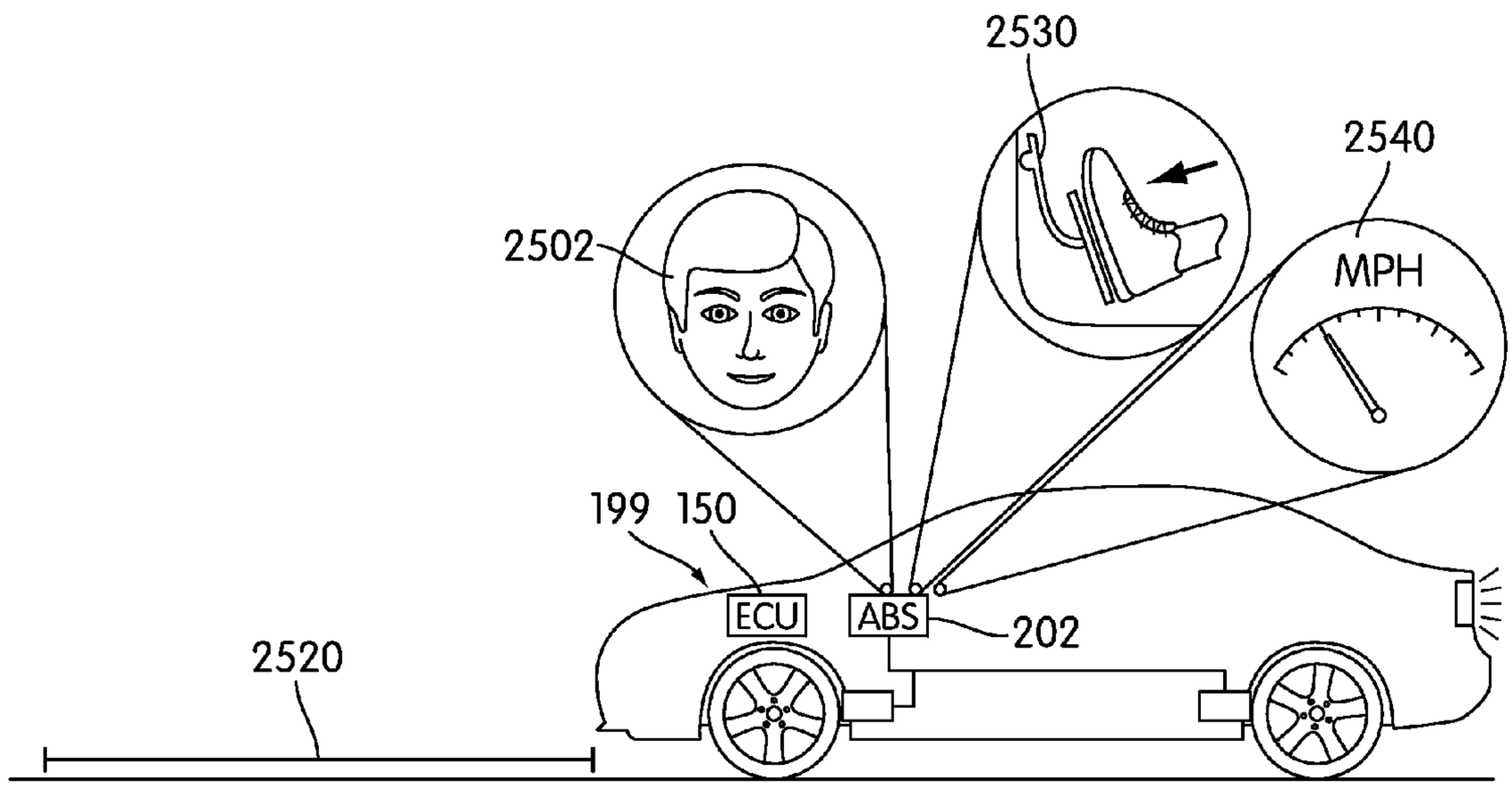
2530
2540
2502
MPH
199
150
ECU
ABS
202
2520

FIG. 36

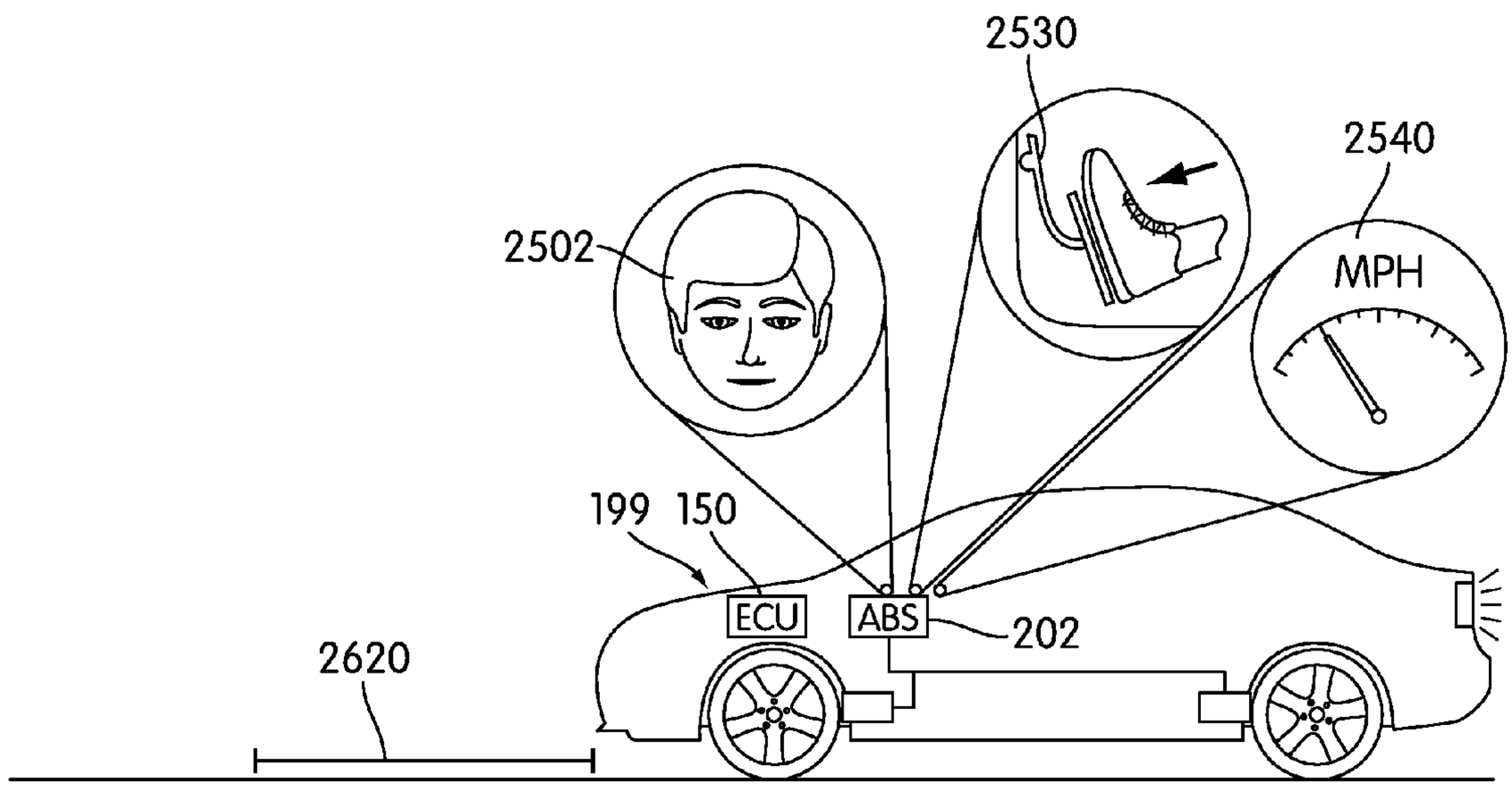
2530
2540
2502
MPH
199
150
ECU
ABS
202
2620

FIG. 37

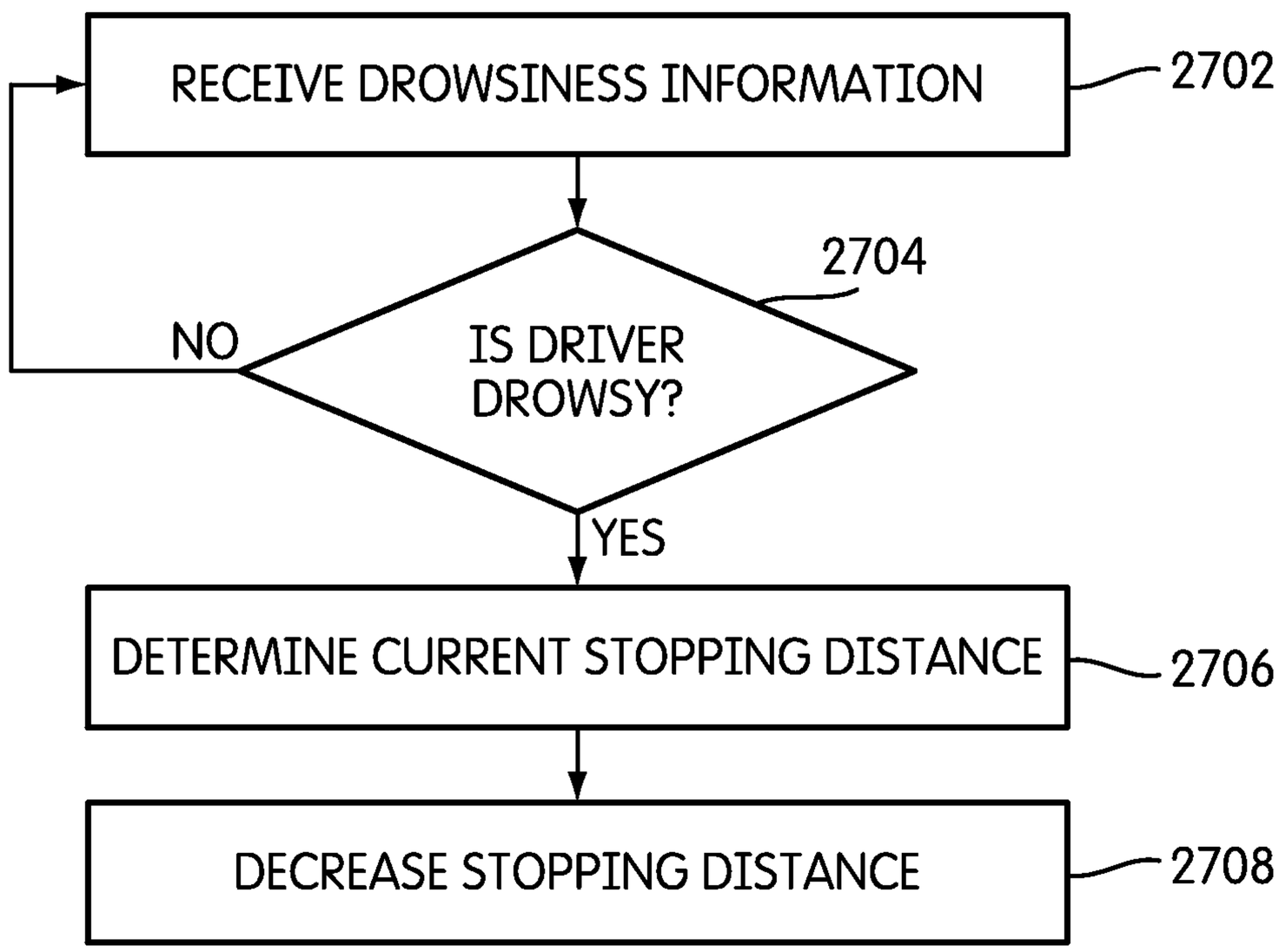
RECEIVE DROWSINESS INFORMATION
2702
2704
NO
IS DRIVER DROWSY?
YES
DETERMINE CURRENT STOPPING DISTANCE
2706
DECREASE STOPPING DISTANCE
2708

FIG. 38

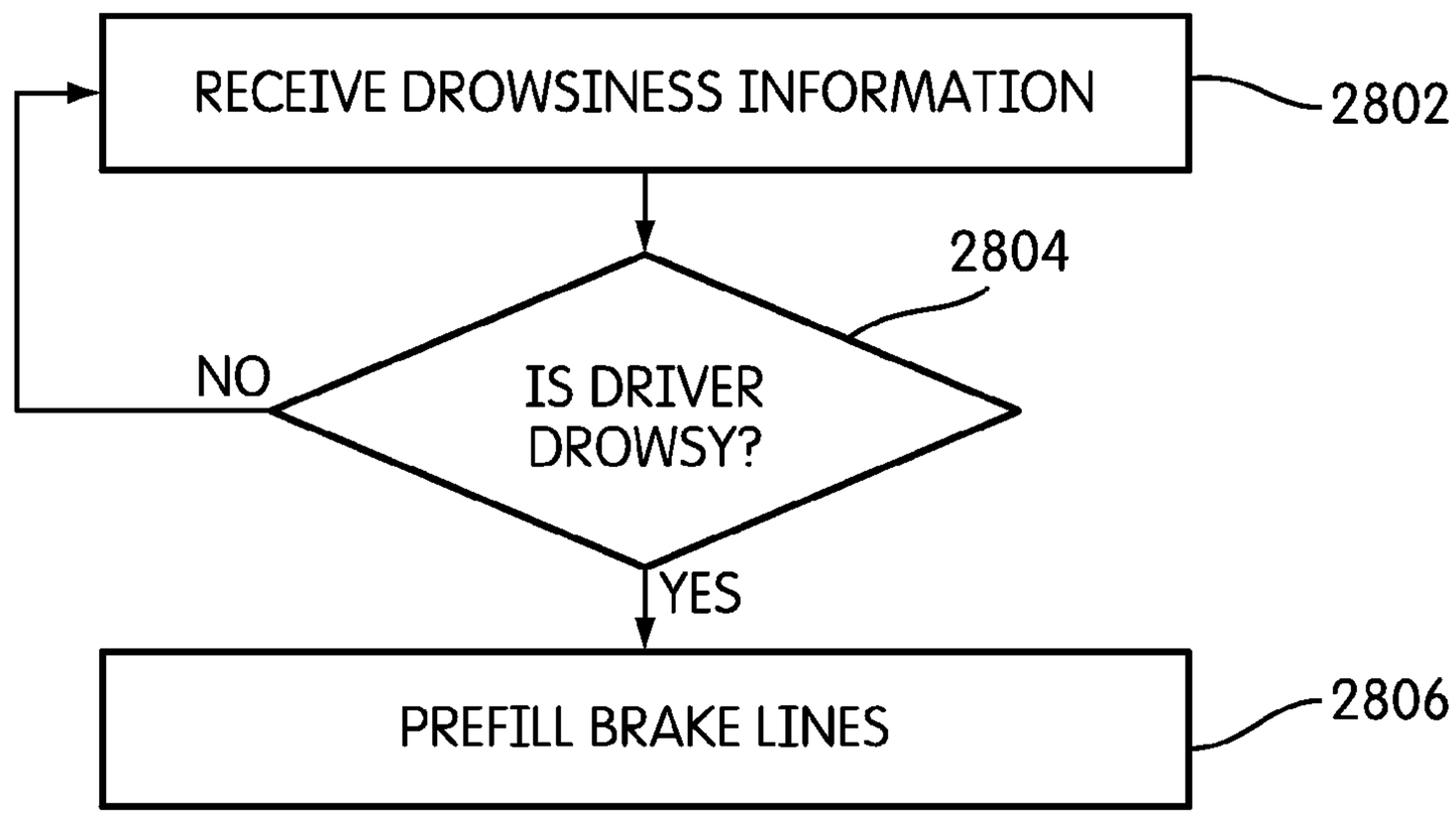
RECEIVE DROWSINESS INFORMATION
2802
2804
NO
IS DRIVER DROWSY?
YES
PREFILL BRAKE LINES
2806

FIG. 39

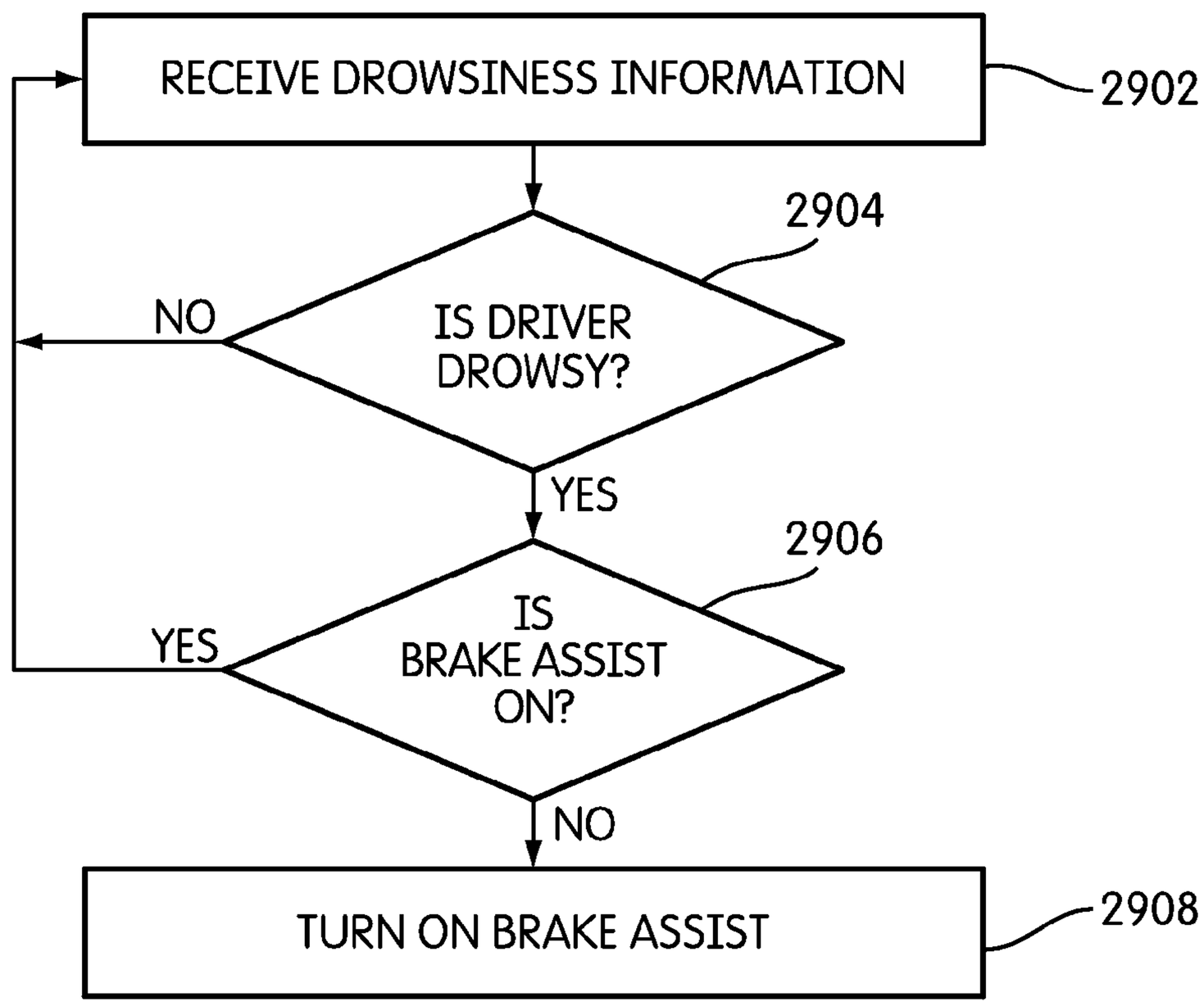
RECEIVE DROWSINESS INFORMATION
2902
2904
NO
IS DRIVER DROWSY?
YES
2906
YES
IS BRAKE ASSIST ON?
NO
TURN ON BRAKE ASSIST
2908

FIG. 40

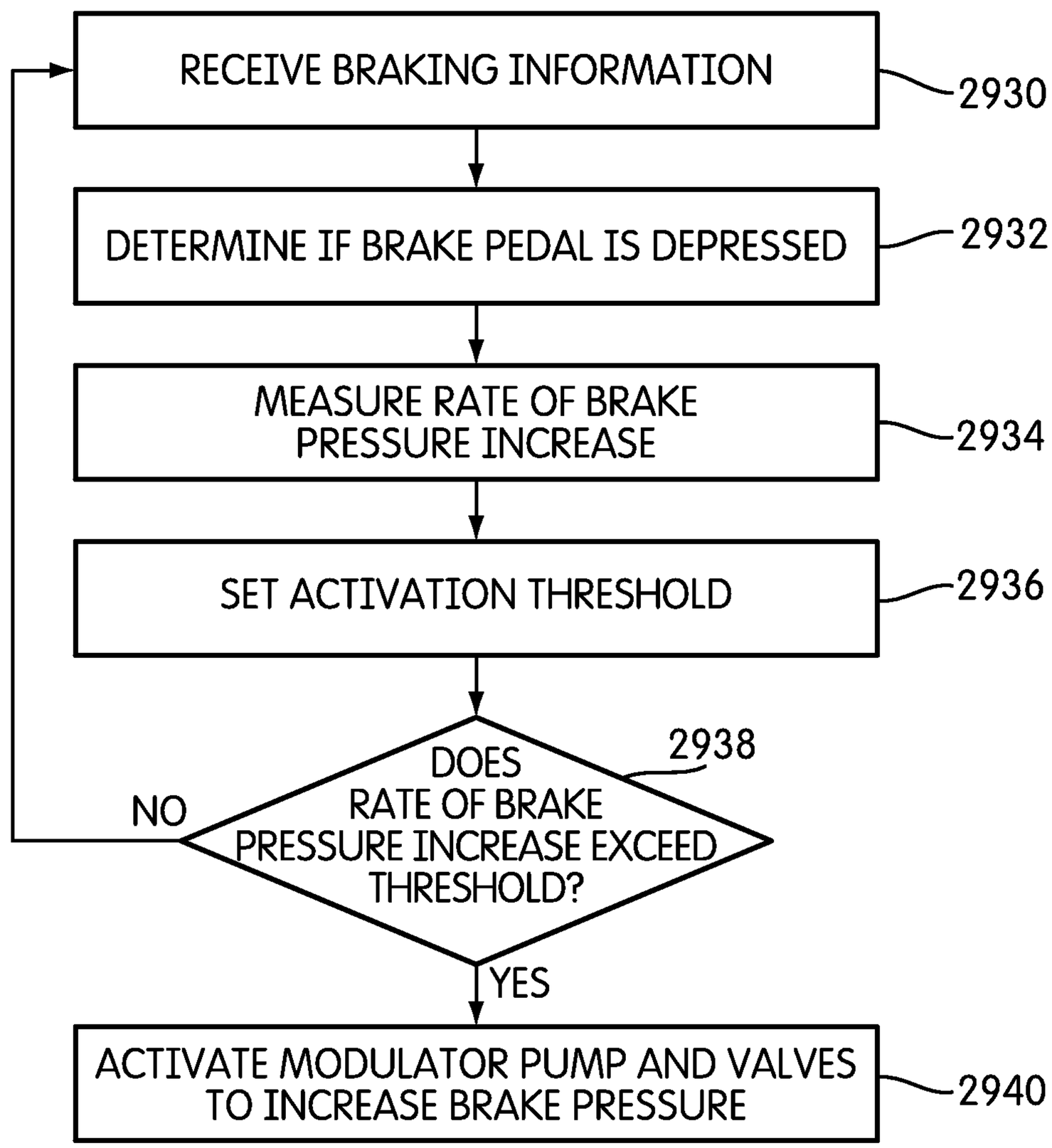
RECEIVE BRAKING INFORMATION
2930
DETERMINE IF BRAKE PEDAL IS DEPRESSED
2932
MEASURE RATE OF BRAKE PRESSURE INCREASE
2934
SET ACTIVATION THRESHOLD
2936
DOES RATE OF BRAKE PRESSURE INCREASE EXCEED THRESHOLD?
2938
NO
YES
ACTIVATE MODULATOR PUMP AND VALVES TO INCREASE BRAKE PRESSURE
2940

FIG. 41

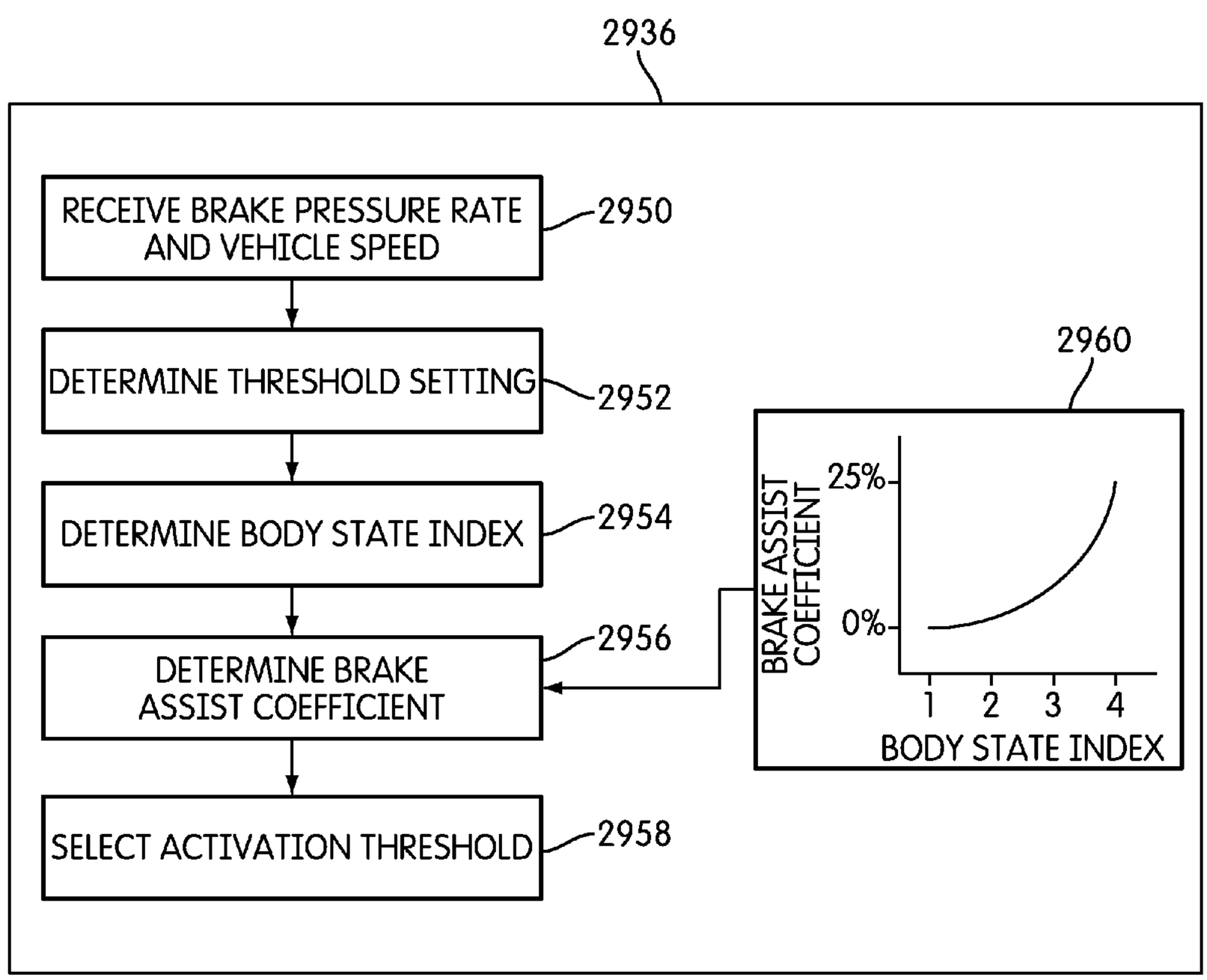
2936
RECEIVE BRAKE PRESSURE RATE AND VEHICLE SPEED
2950
DETERMINE THRESHOLD SETTING
2952
DETERMINE BODY STATE INDEX
2954
DETERMINE BRAKE ASSIST COEFFICIENT
2956
SELECT ACTIVATION THRESHOLD
2958
2960
BRAKE ASSIST COEFFICIENT
25%
0%
1
2
3
4
BODY STATE INDEX

FIG. 42

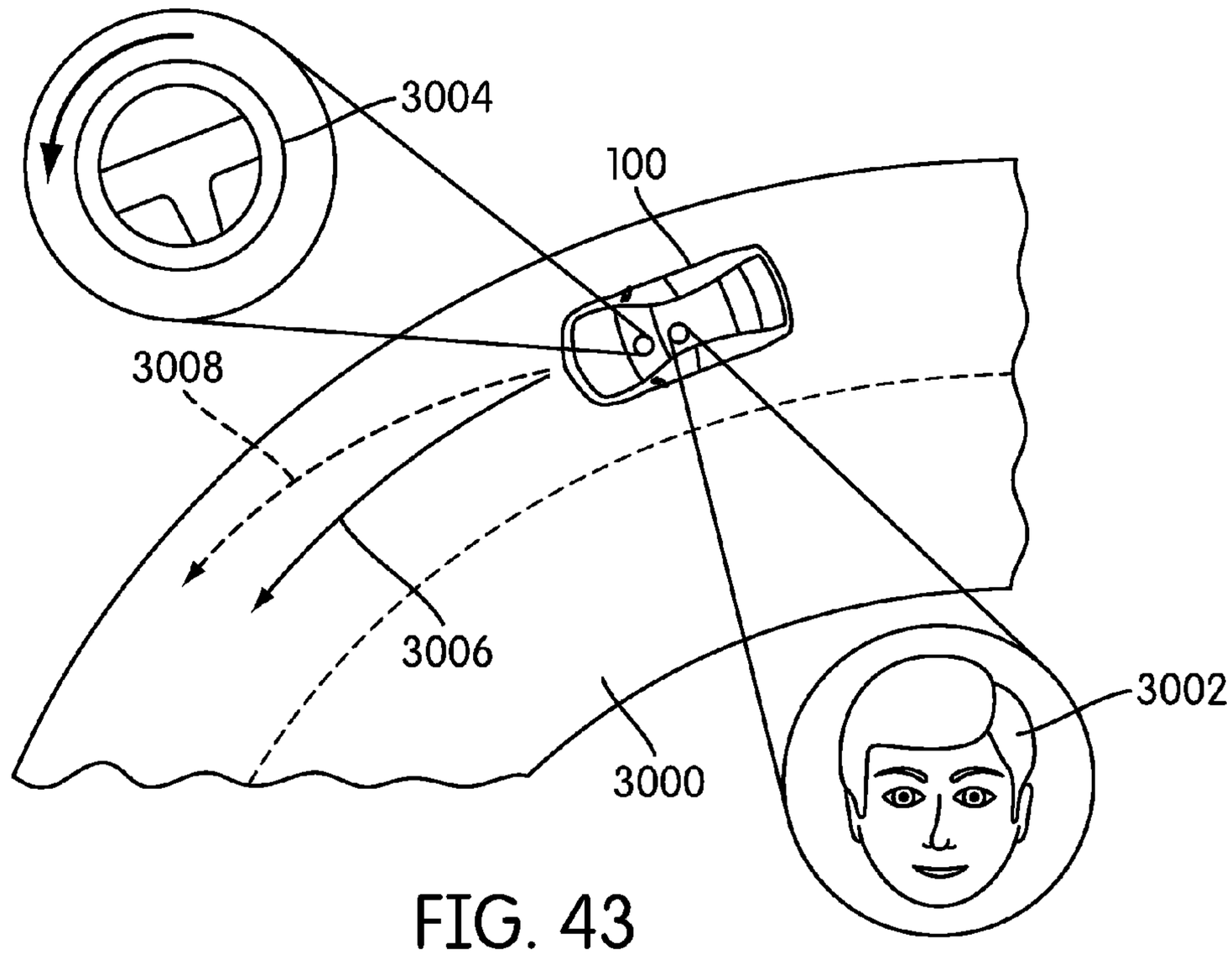
3004
100
3008
3006
3000
3002

FIG. 43

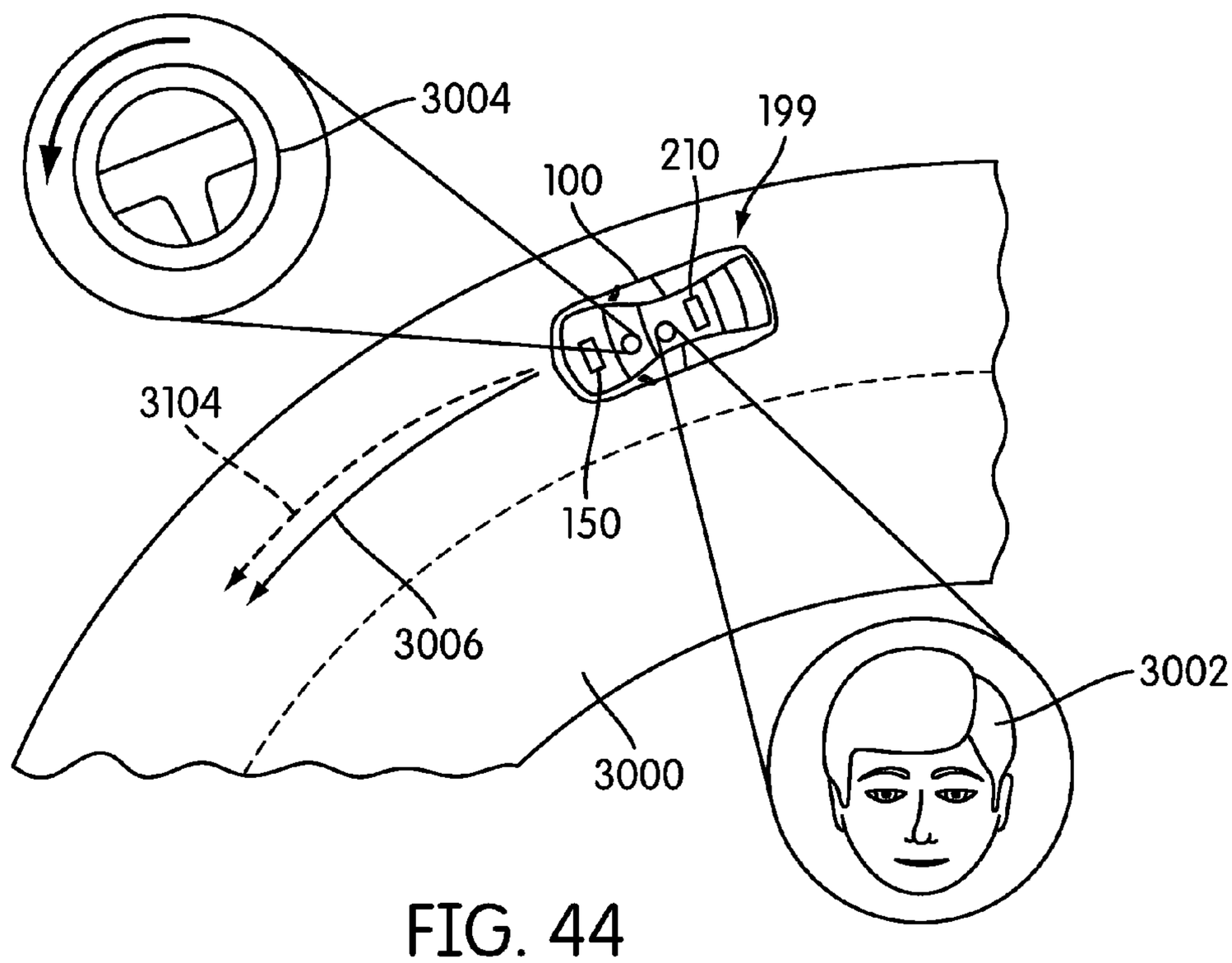
3004
199
210
100
3104
150
3006
3000
3002

FIG. 44

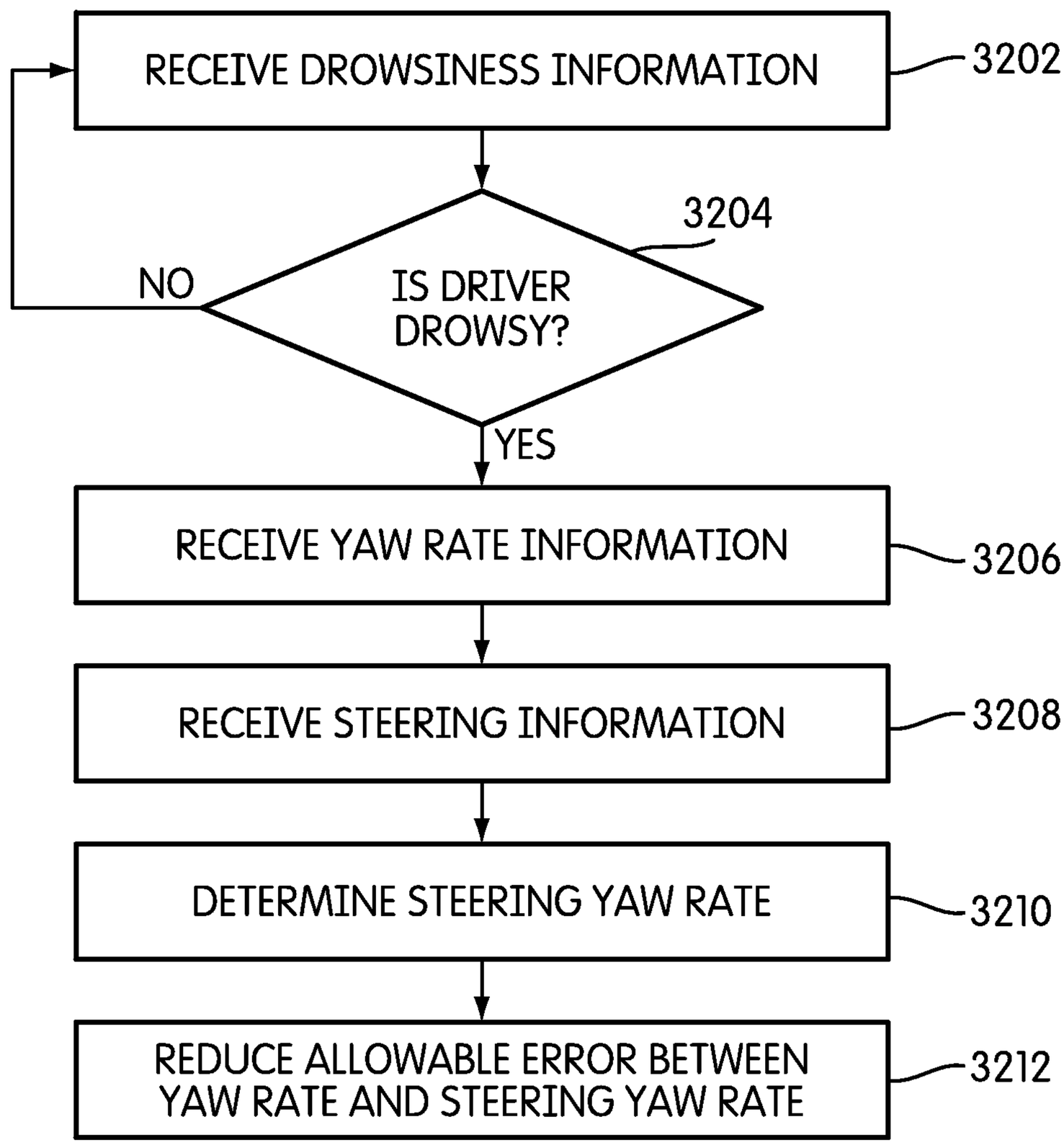
RECEIVE DROWSINESS INFORMATION
3202
IS DRIVER DROWSY?
3204
NO
YES
RECEIVE YAW RATE INFORMATION
3206
RECEIVE STEERING INFORMATION
3208
DETERMINE STEERING YAW RATE
3210
REDUCE ALLOWABLE ERROR BETWEEN YAW RATE AND STEERING YAW RATE
3212

FIG. 45

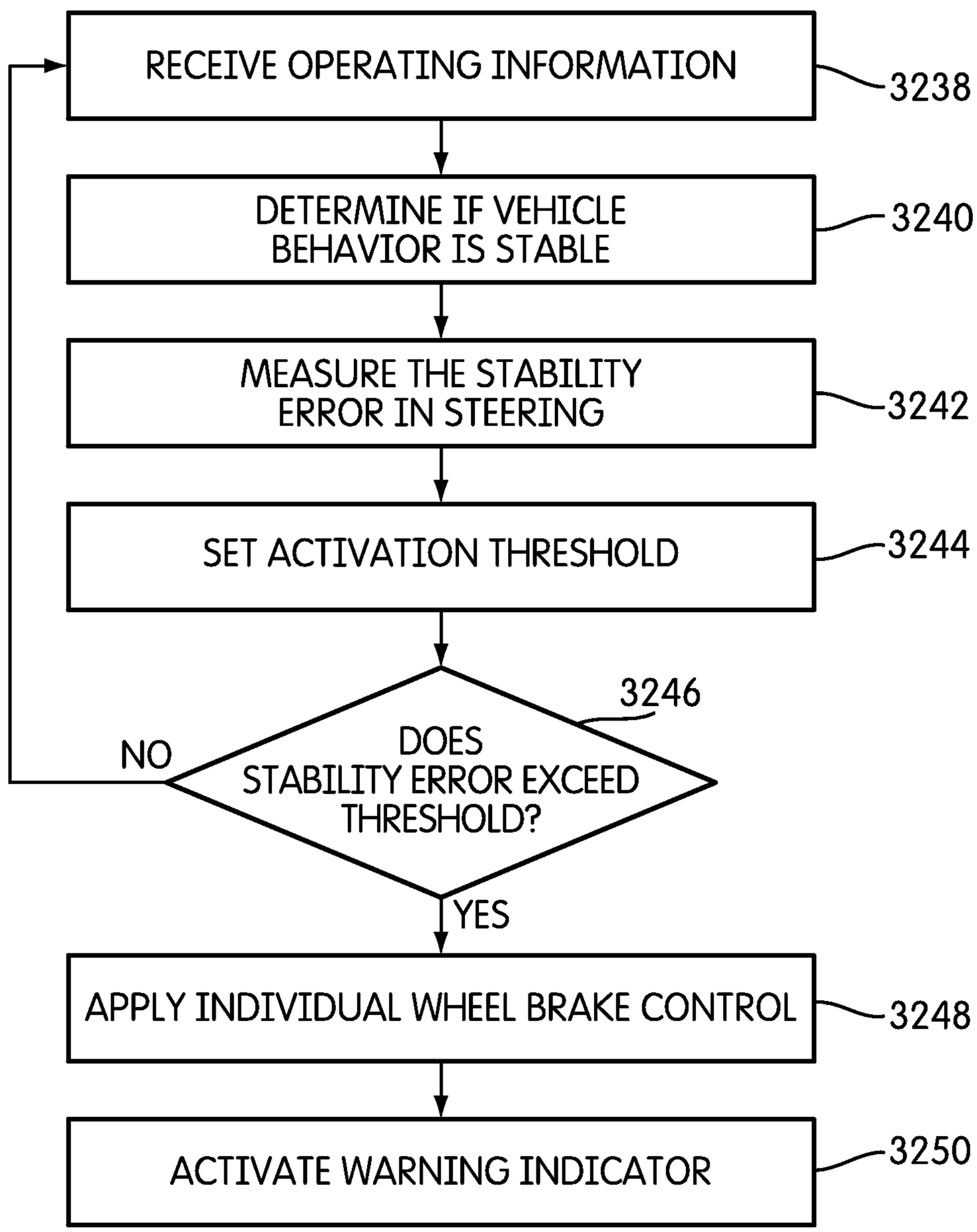
RECEIVE OPERATING INFORMATION
3238
DETERMINE IF VEHICLE BEHAVIOR IS STABLE
3240
MEASURE THE STABILITY ERROR IN STEERING
3242
SET ACTIVATION THRESHOLD
3244
3246
DOES STABILITY ERROR EXCEED THRESHOLD?
NO
YES
APPLY INDIVIDUAL WHEEL BRAKE CONTROL
3248
ACTIVATE WARNING INDICATOR
3250

FIG. 46

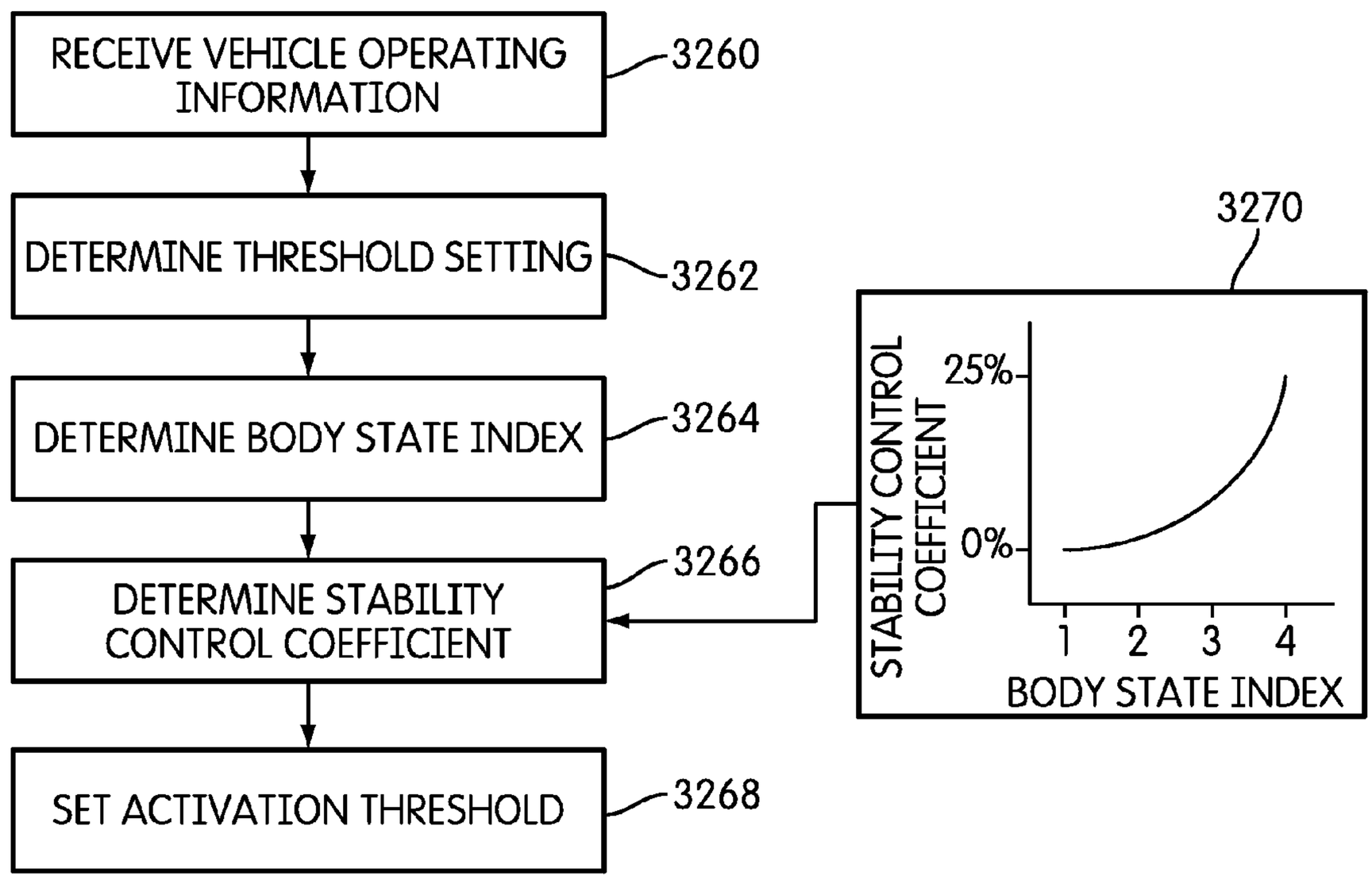
RECEIVE VEHICLE OPERATING INFORMATION
3260
DETERMINE THRESHOLD SETTING
3262
DETERMINE BODY STATE INDEX
3264
DETERMINE STABILITY CONTROL COEFFICIENT
3266
SET ACTIVATION THRESHOLD
3268
3270
STABILITY CONTROL COEFFICIENT
25%
0%
1
2
3
4
BODY STATE INDEX

FIG. 47

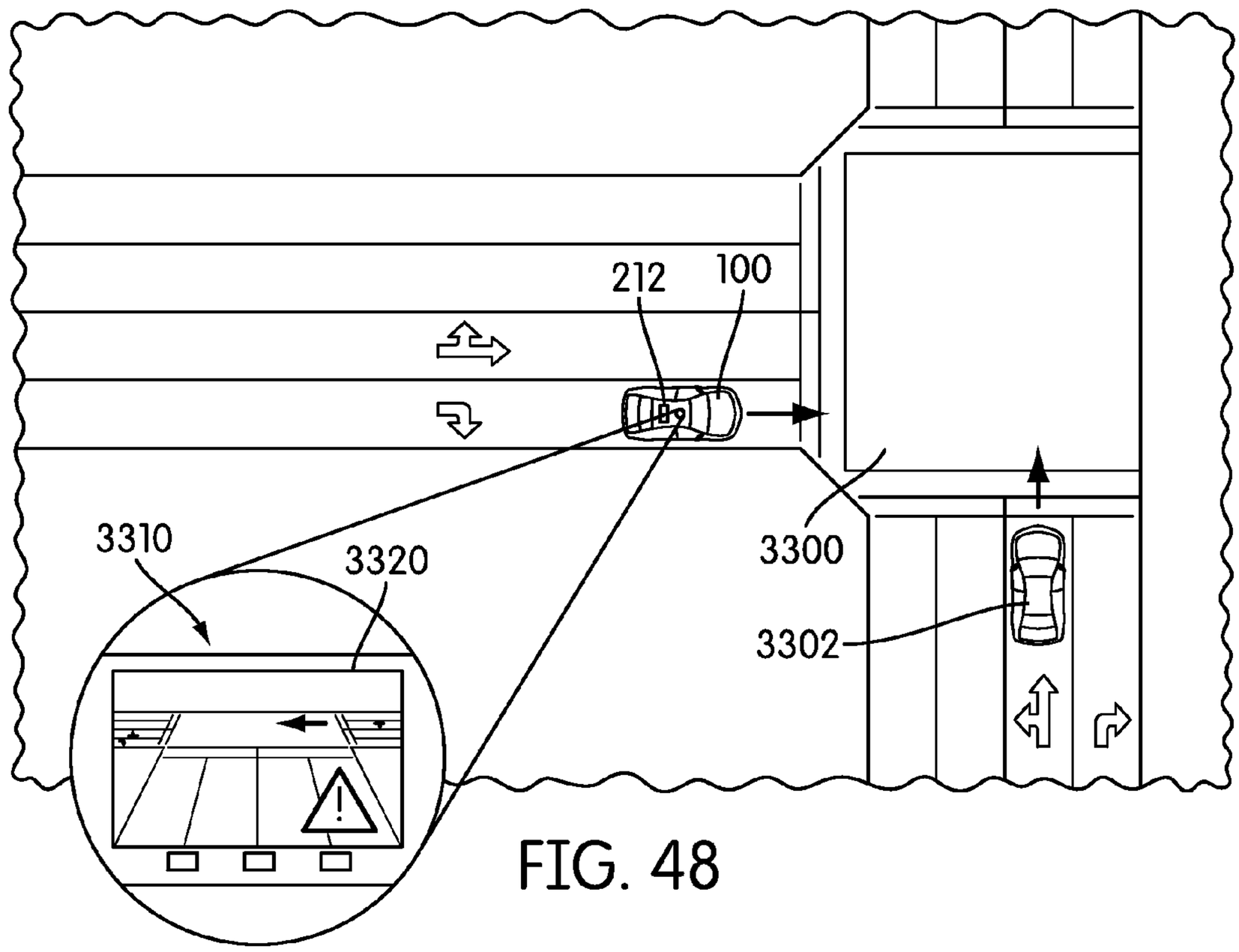
212
100
3310
3320
3300
3302

FIG. 48

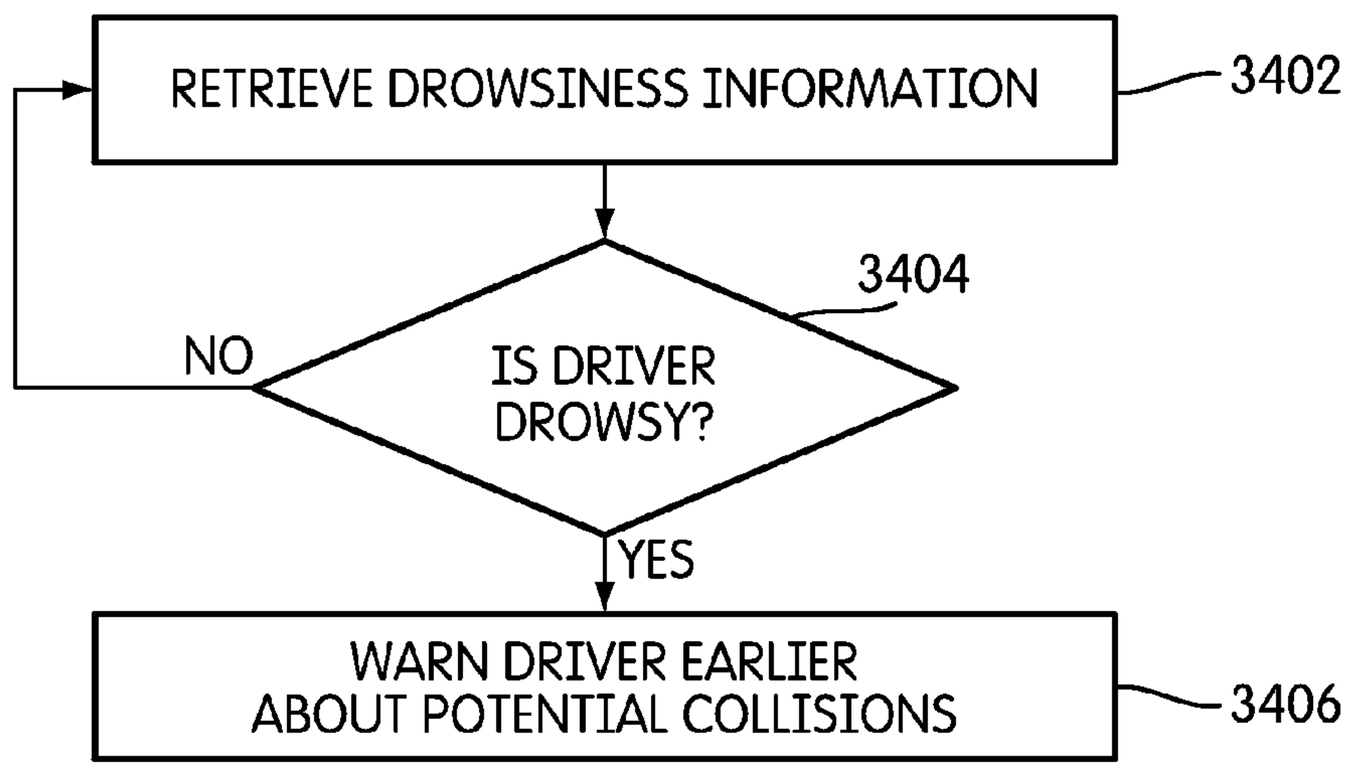
RETRIEVE DROWSINESS INFORMATION
3402
3404
NO
IS DRIVER DROWSY?
YES
WARN DRIVER EARLIER ABOUT POTENTIAL COLLISIONS
3406

FIG. 49

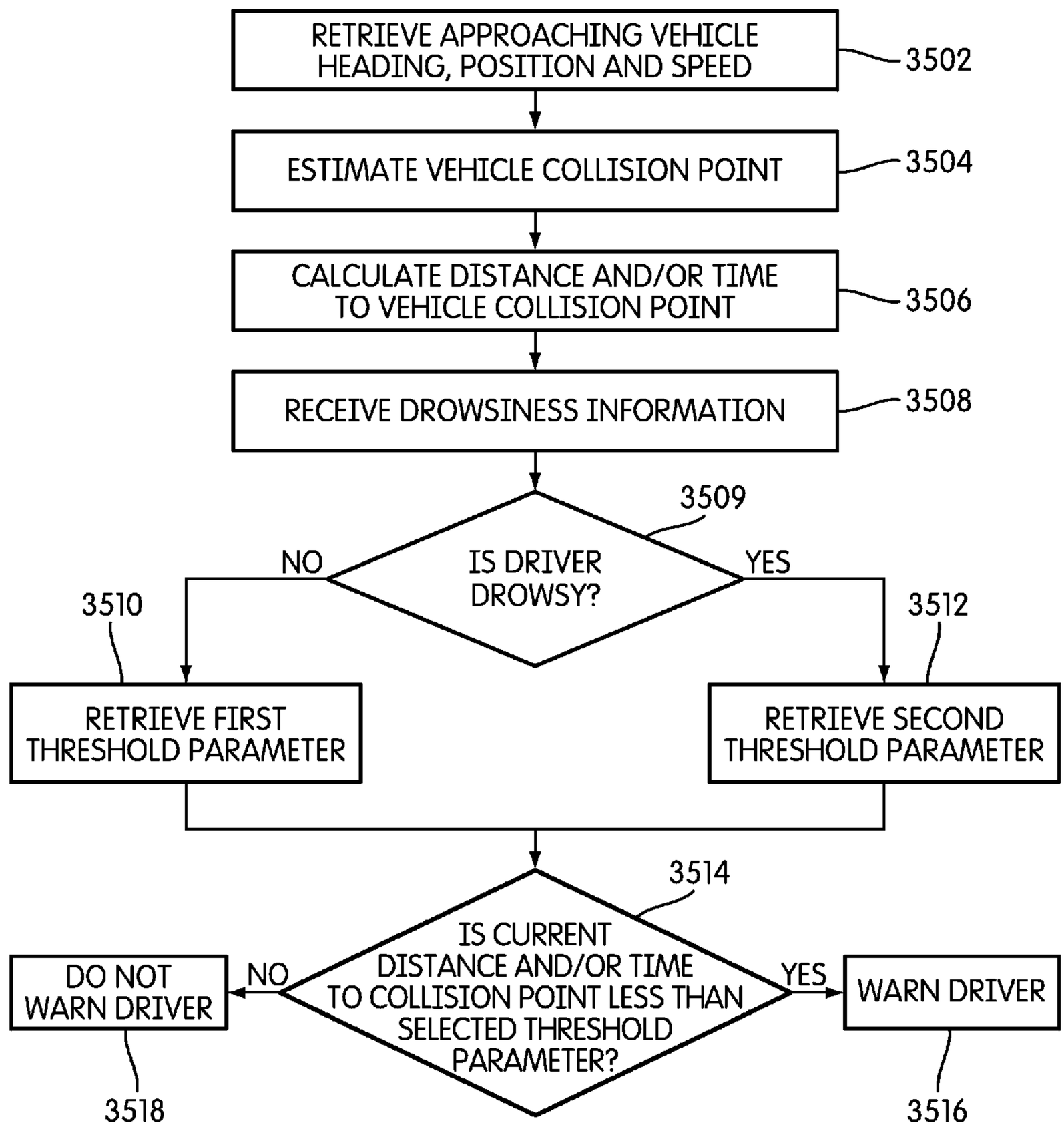
RETRIEVE APPROACHING VEHICLE HEADING, POSITION AND SPEED
3502
ESTIMATE VEHICLE COLLISION POINT
3504
CALCULATE DISTANCE AND/OR TIME TO VEHICLE COLLISION POINT
3506
RECEIVE DROWSINESS INFORMATION
3508
3509
IS DRIVER DROWSY?
NO
YES
3510
3512
RETRIEVE FIRST THRESHOLD PARAMETER
RETRIEVE SECOND THRESHOLD PARAMETER
3514
IS CURRENT DISTANCE AND/OR TIME TO COLLISION POINT LESS THAN SELECTED THRESHOLD PARAMETER?
NO
YES
DO NOT WARN DRIVER
WARN DRIVER
3518
3516

FIG. 50

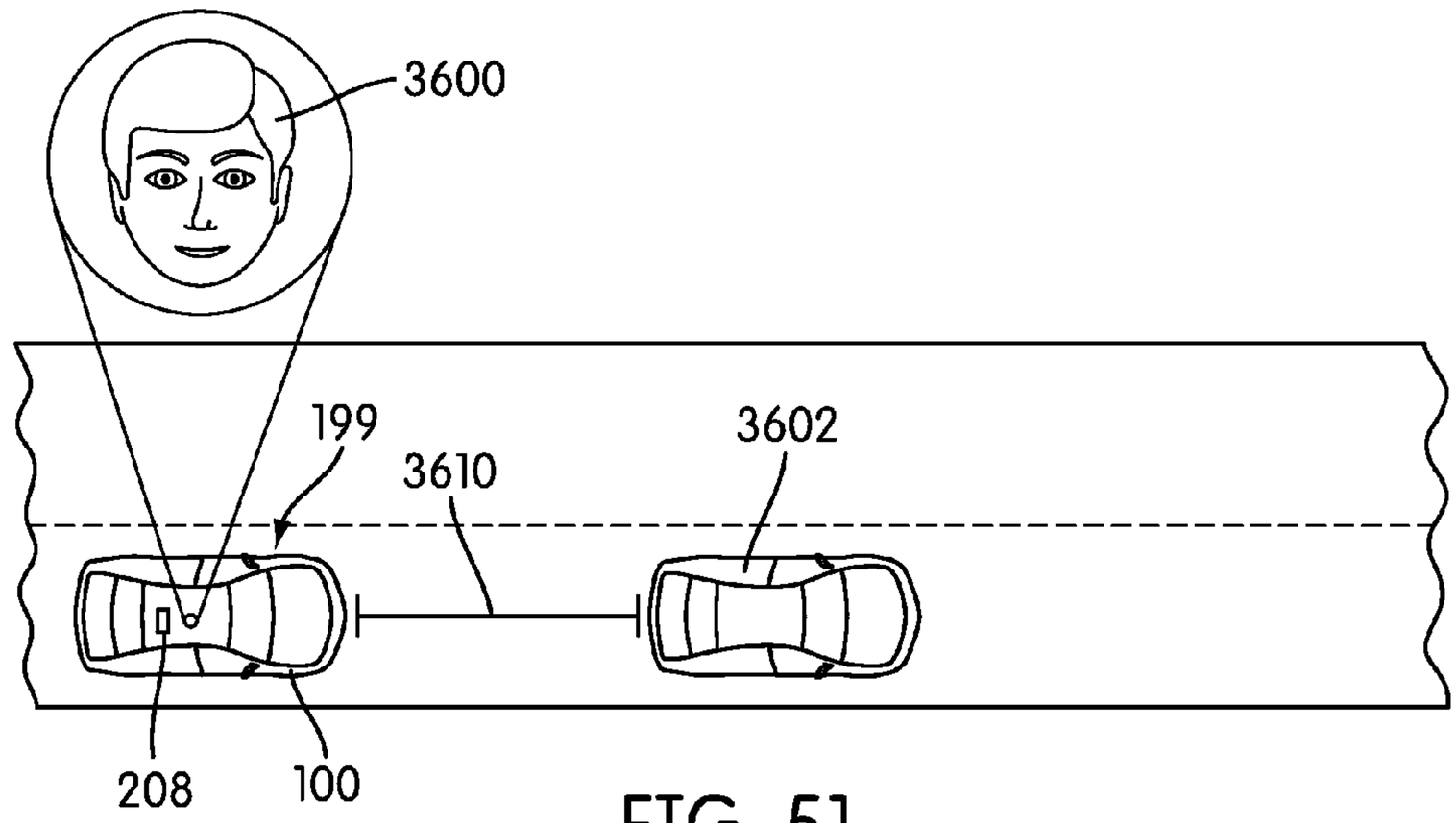

FIG. 51

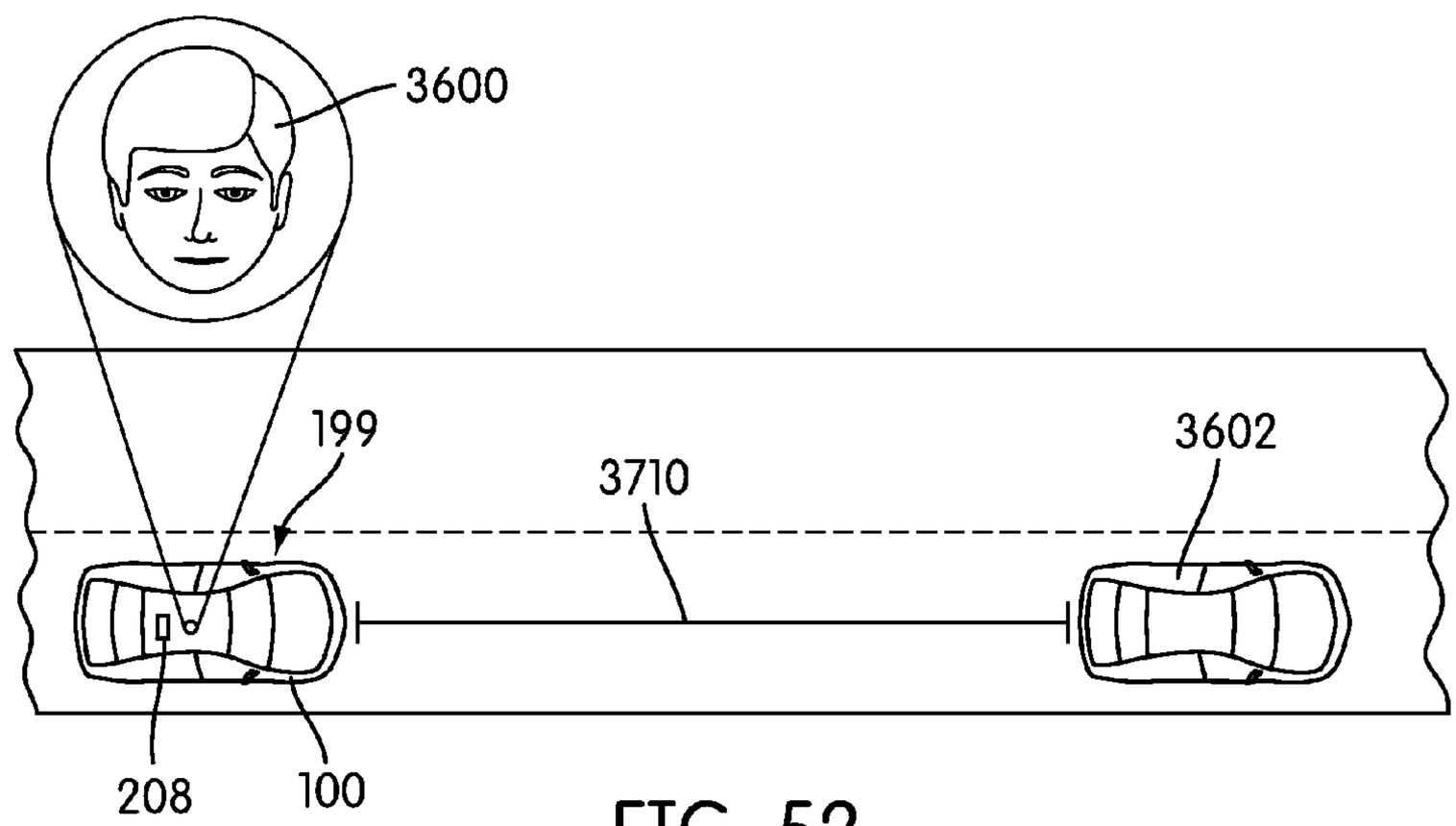

FIG. 52

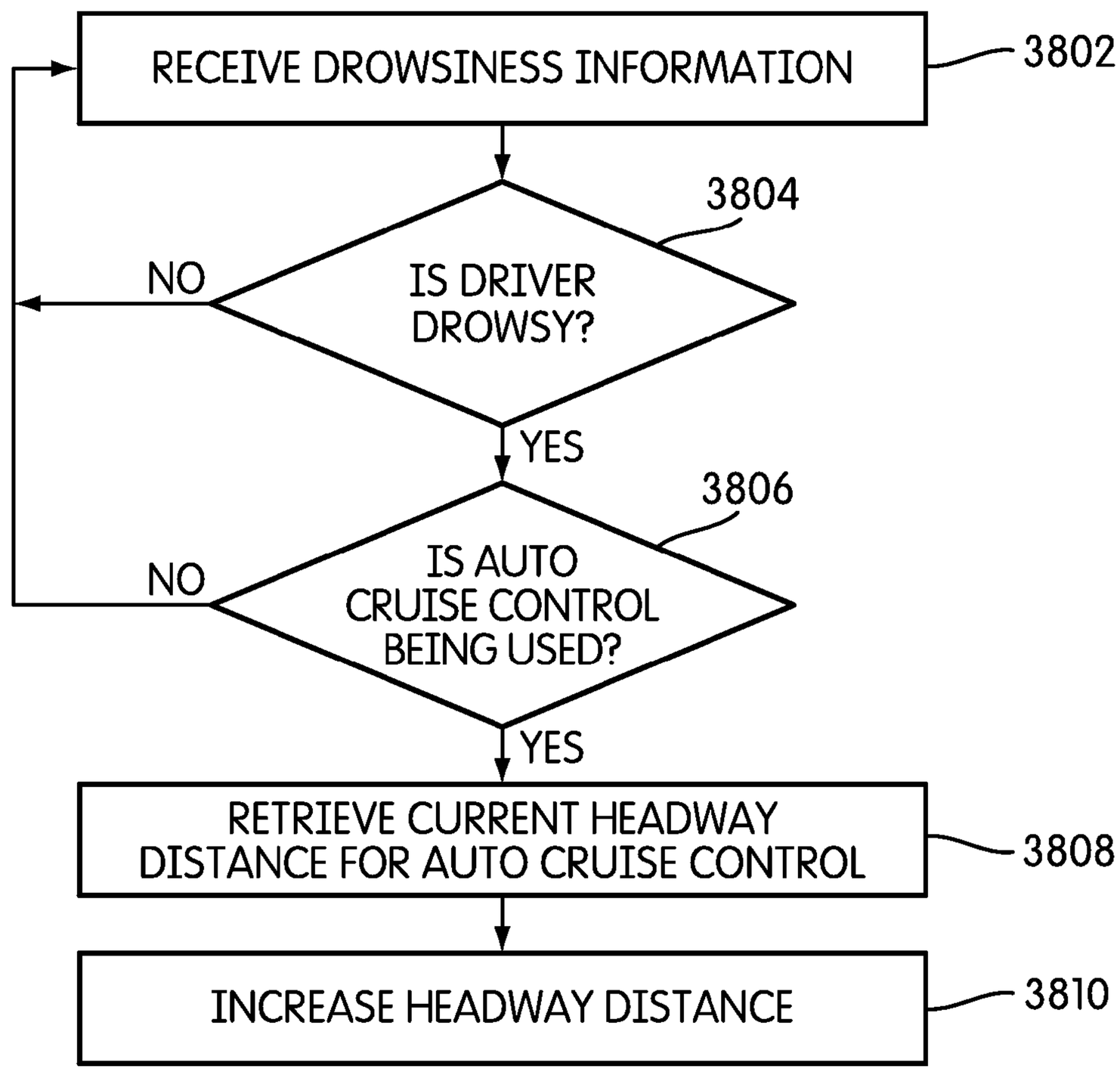
RECEIVE DROWSINESS INFORMATION
3802
IS DRIVER DROWSY?
3804
NO
YES
IS AUTO CRUISE CONTROL BEING USED?
3806
NO
YES
RETRIEVE CURRENT HEADWAY DISTANCE FOR AUTO CRUISE CONTROL
3808
INCREASE HEADWAY DISTANCE
3810

FIG. 53

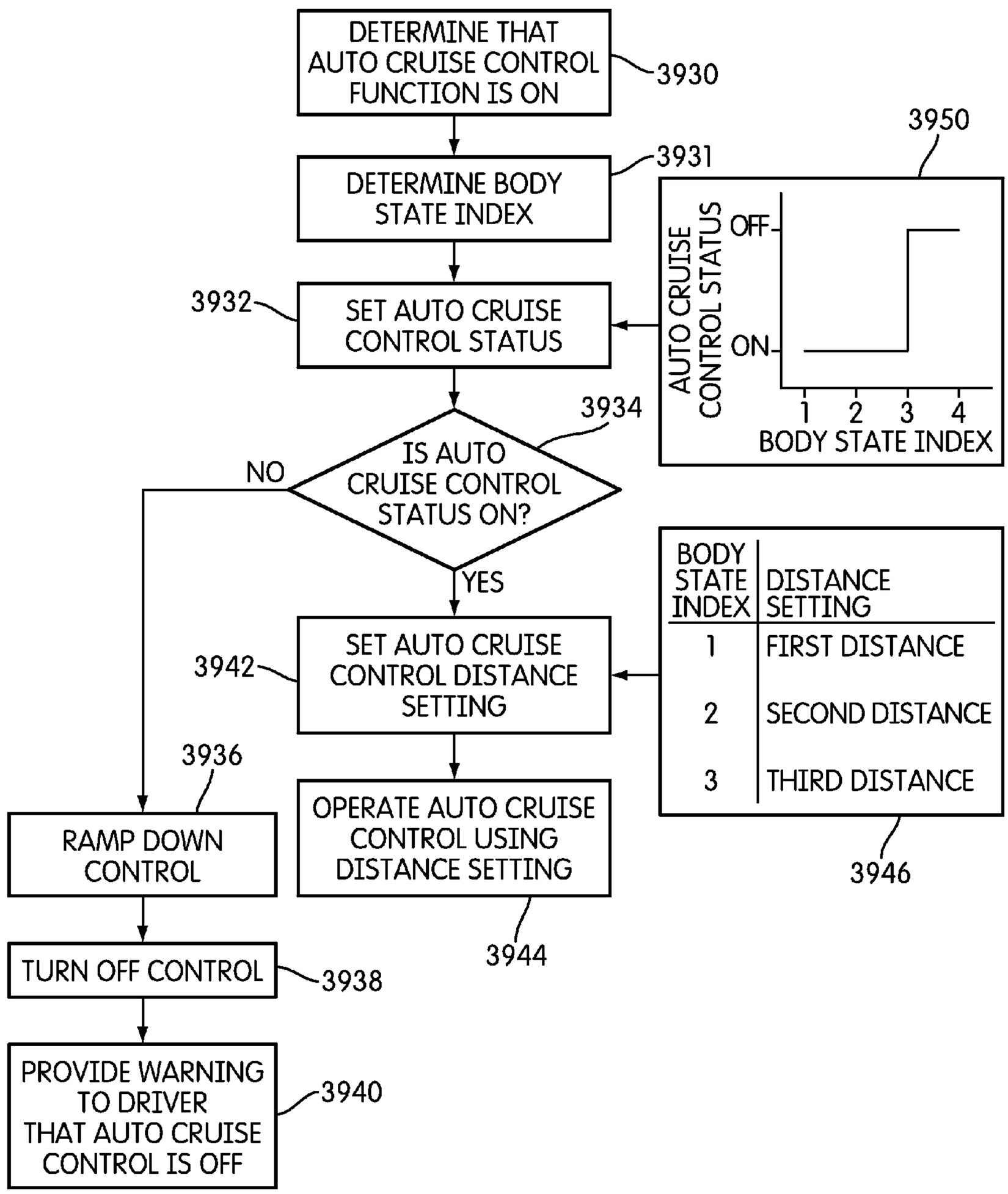
DETERMINE THAT AUTO CRUISE CONTROL FUNCTION IS ON
3930
DETERMINE BODY STATE INDEX
3931
3950
AUTO CRUISE CONTROL STATUS
OFF
ON
1 2 3 4
BODY STATE INDEX
3932
SET AUTO CRUISE CONTROL STATUS
3934
IS AUTO CRUISE CONTROL STATUS ON?
NO
YES
BODY STATE INDEX
DISTANCE SETTING
1
FIRST DISTANCE
2
SECOND DISTANCE
3
THIRD DISTANCE
3942
SET AUTO CRUISE CONTROL DISTANCE SETTING
3936
RAMP DOWN CONTROL
OPERATE AUTO CRUISE CONTROL USING DISTANCE SETTING
3946
3944
TURN OFF CONTROL
3938
PROVIDE WARNING TO DRIVER THAT AUTO CRUISE CONTROL IS OFF
3940

FIG. 54

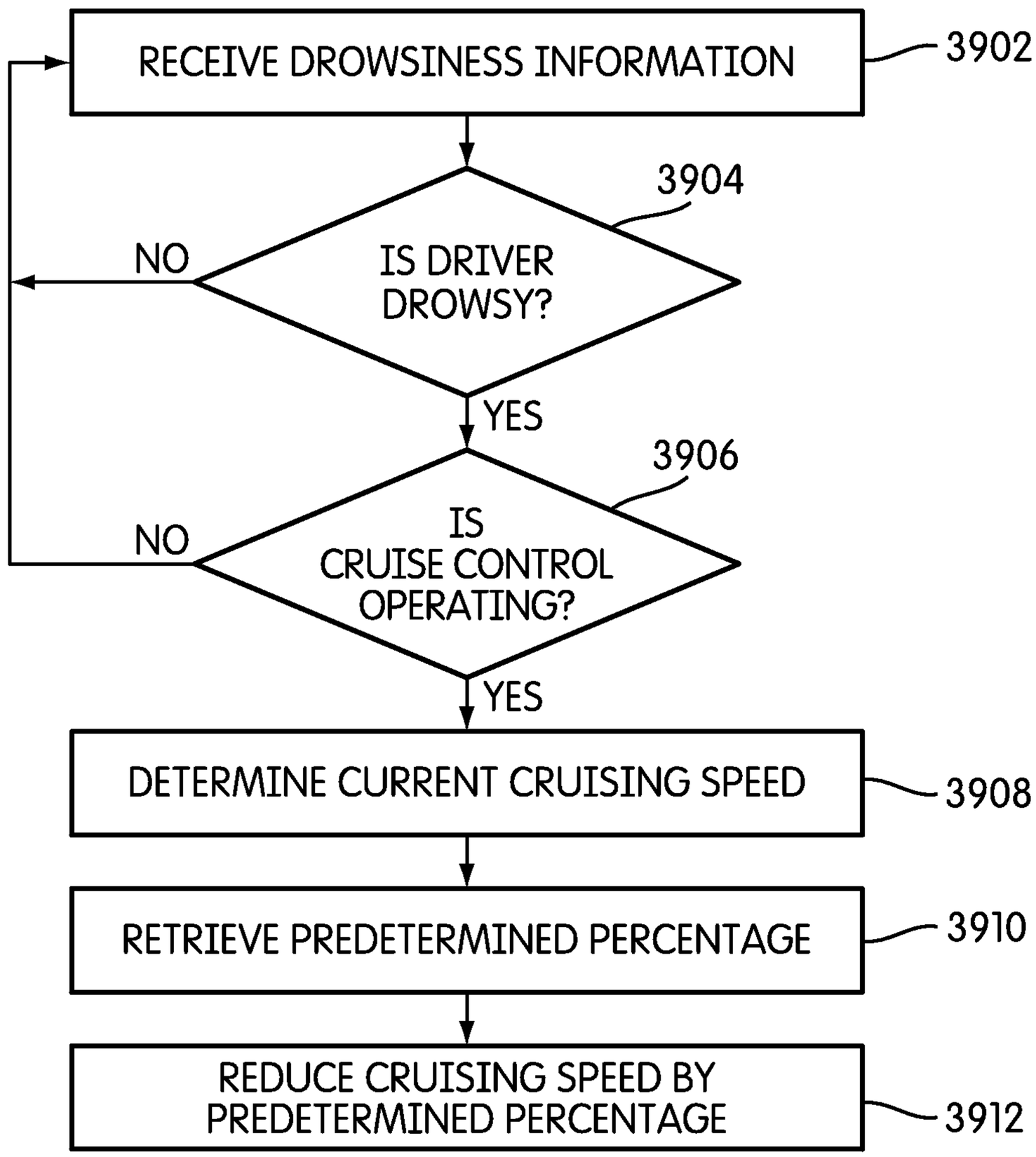
RECEIVE DROWSINESS INFORMATION
3902
IS DRIVER DROWSY?
3904
NO
YES
IS CRUISE CONTROL OPERATING?
3906
NO
YES
DETERMINE CURRENT CRUISING SPEED
3908
RETRIEVE PREDETERMINED PERCENTAGE
3910
REDUCE CRUISING SPEED BY PREDETERMINED PERCENTAGE
3912

FIG. 55

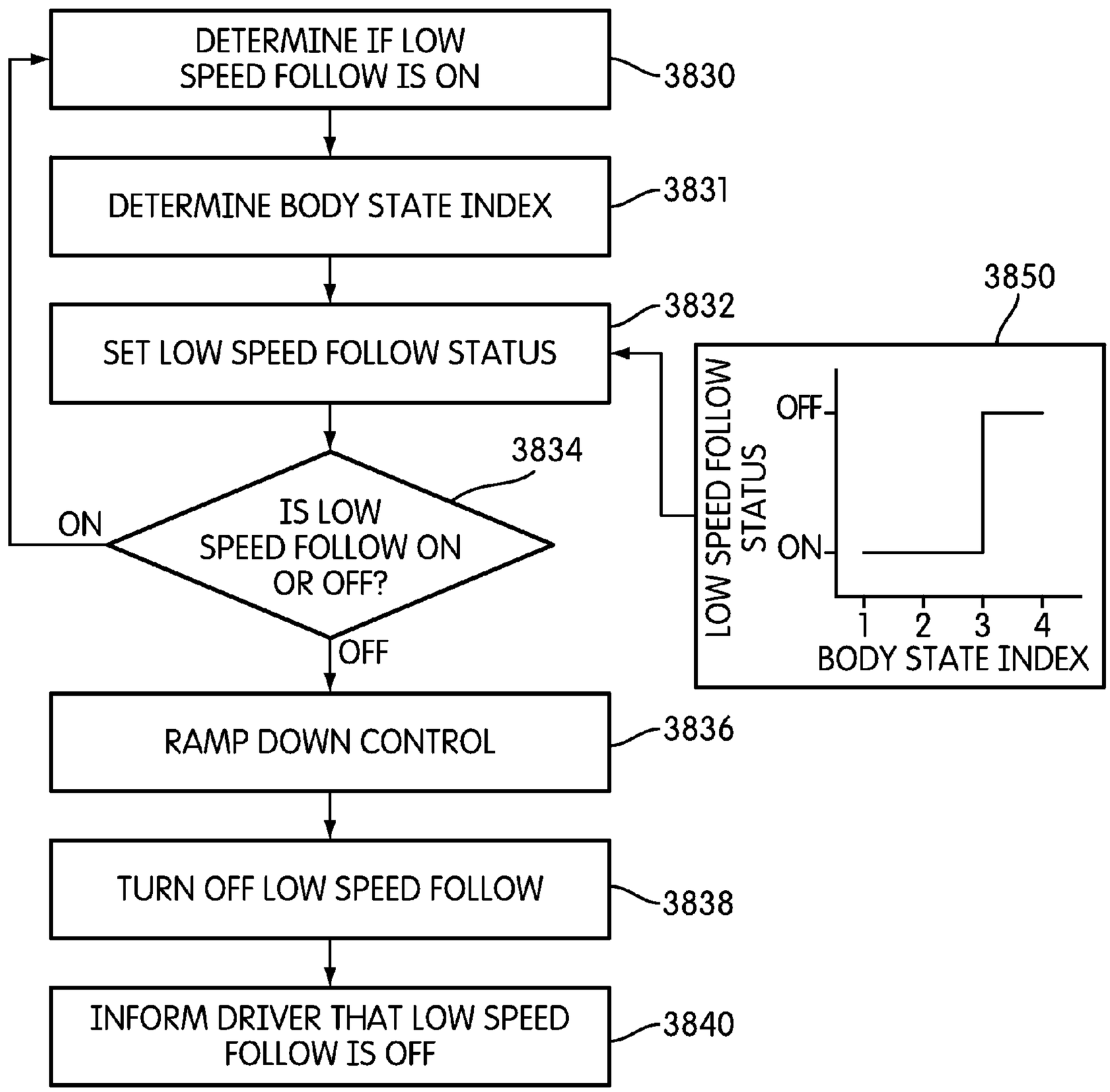
DETERMINE IF LOW SPEED FOLLOW IS ON
3830
DETERMINE BODY STATE INDEX
3831
SET LOW SPEED FOLLOW STATUS
3832
3850
LOW SPEED FOLLOW STATUS
OFF
ON
1
2
3
4
BODY STATE INDEX
3834
IS LOW SPEED FOLLOW ON OR OFF?
ON
OFF
RAMP DOWN CONTROL
3836
TURN OFF LOW SPEED FOLLOW
3838
INFORM DRIVER THAT LOW SPEED FOLLOW IS OFF
3840

FIG. 56

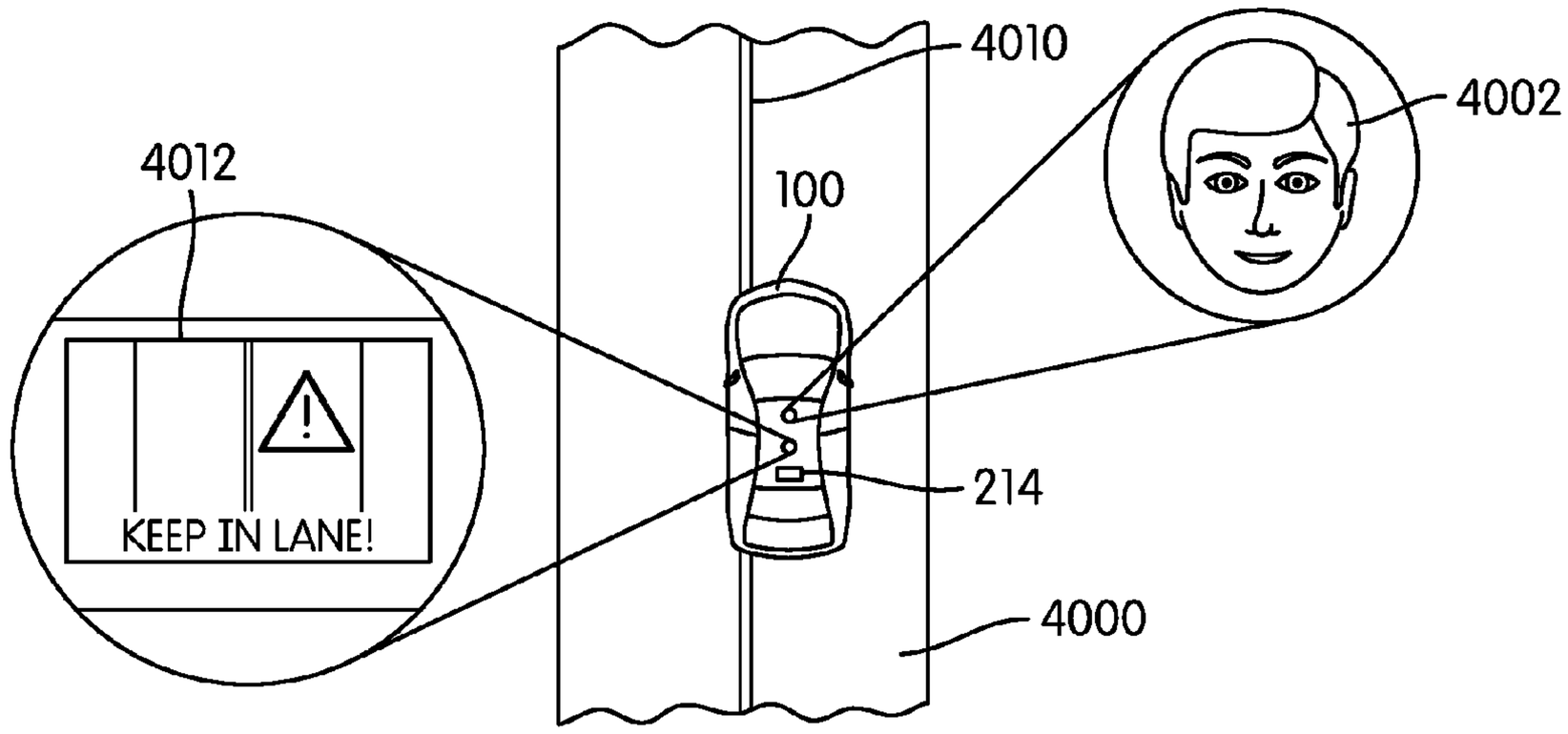
4010
4002
4012
100
KEEP IN LANE!
214
4000

FIG. 57

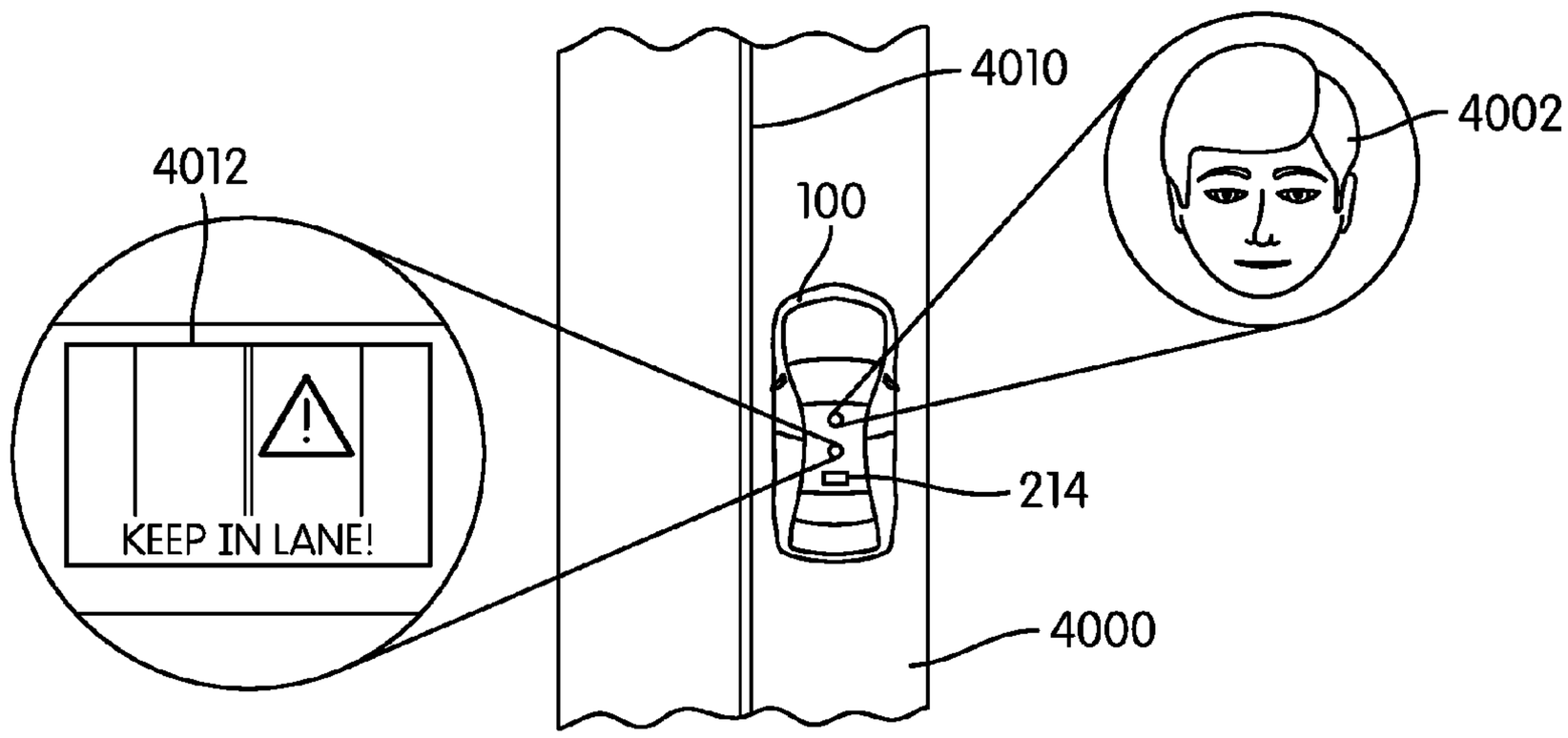
4010
4002
4012
100
KEEP IN LANE!
214
4000

FIG. 58

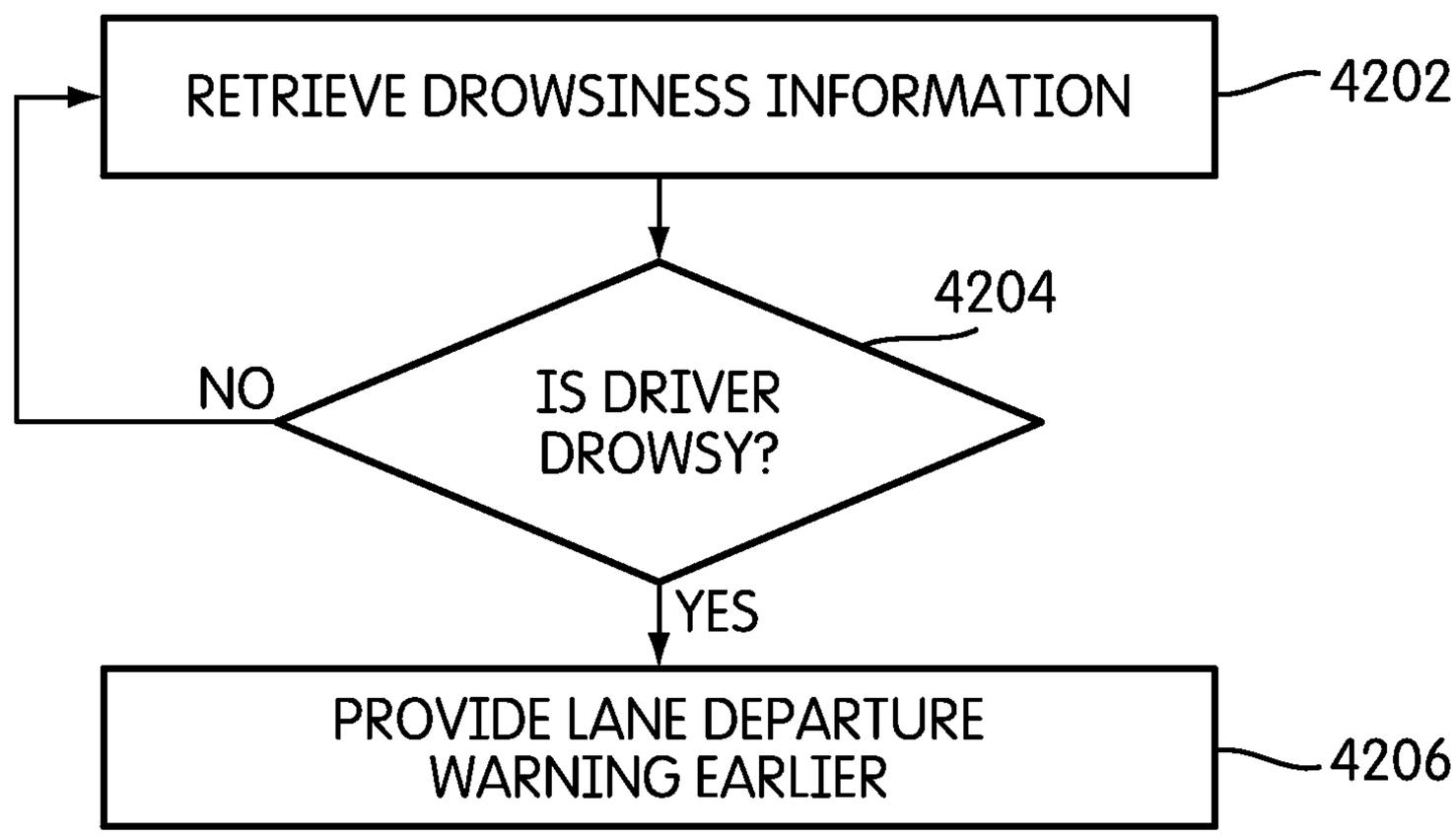
RETRIEVE DROWSINESS INFORMATION
4202
4204
NO
IS DRIVER DROWSY?
YES
PROVIDE LANE DEPARTURE WARNING EARLIER
4206

FIG. 59

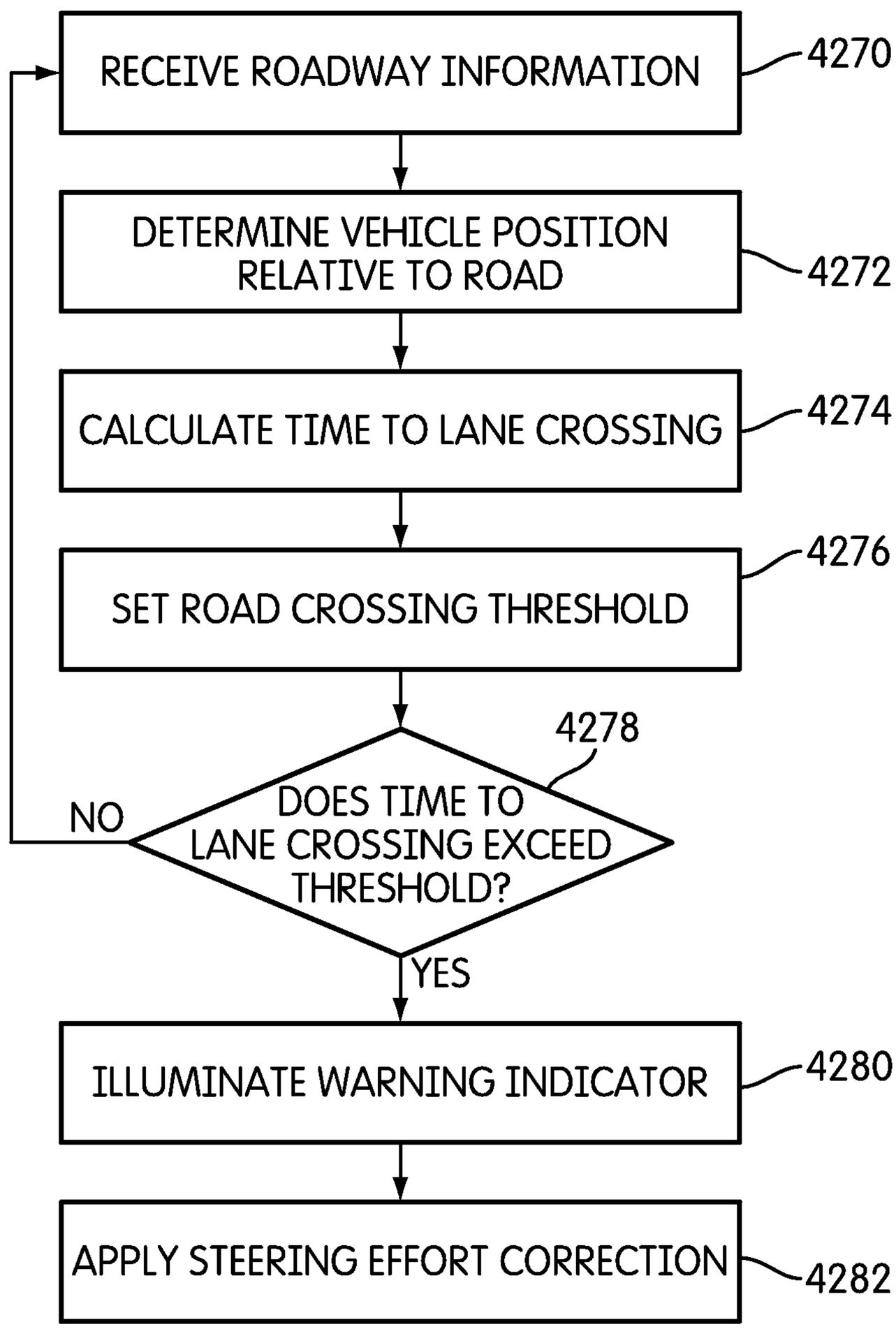
RECEIVE ROADWAY INFORMATION
4270
DETERMINE VEHICLE POSITION RELATIVE TO ROAD
4272
CALCULATE TIME TO LANE CROSSING
4274
SET ROAD CROSSING THRESHOLD
4276
4278
DOES TIME TO LANE CROSSING EXCEED THRESHOLD?
NO
YES
ILLUMINATE WARNING INDICATOR
4280
APPLY STEERING EFFORT CORRECTION
4282

FIG. 60

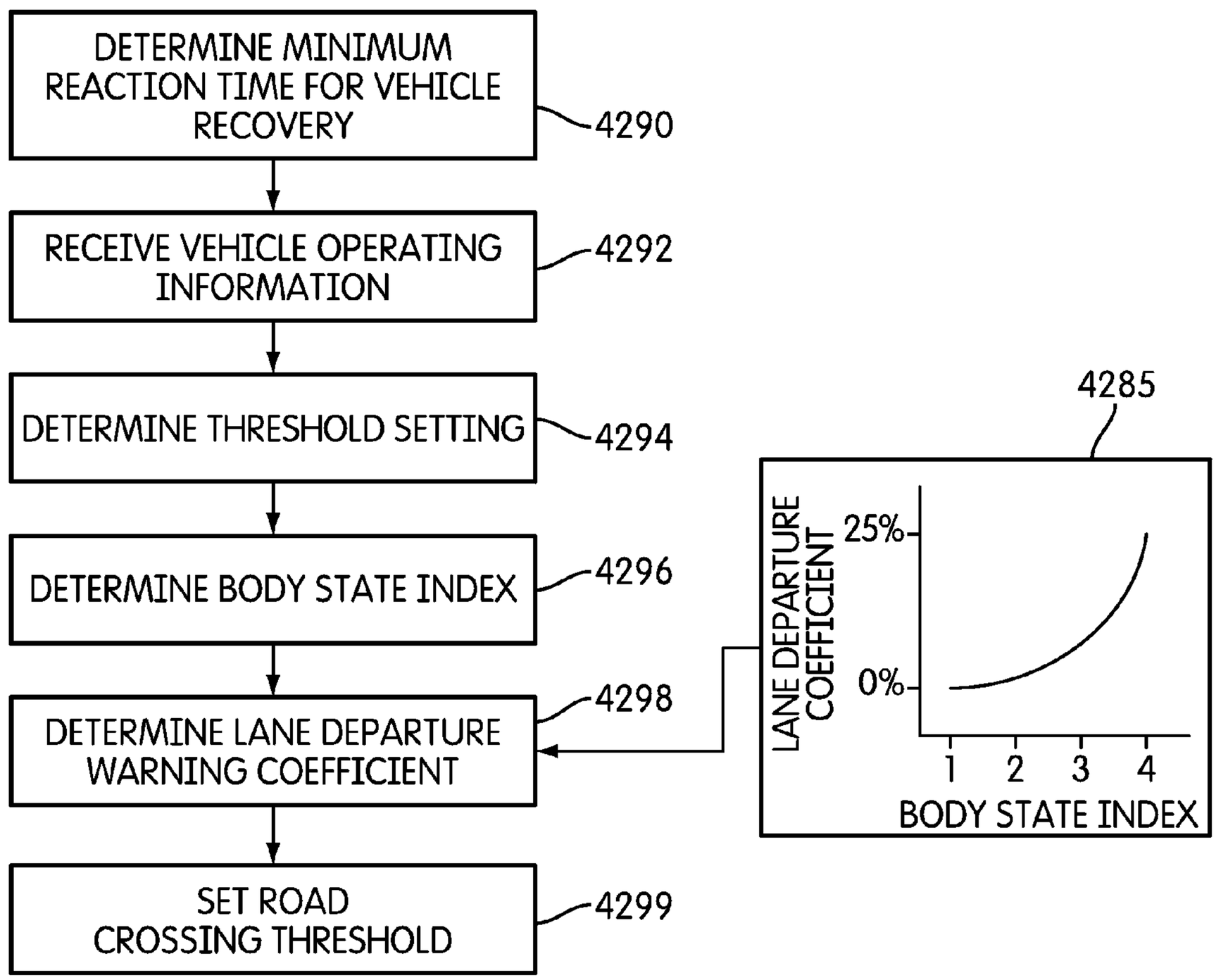
DETERMINE MINIMUM REACTION TIME FOR VEHICLE RECOVERY
4290
RECEIVE VEHICLE OPERATING INFORMATION
4292
DETERMINE THRESHOLD SETTING
4294
DETERMINE BODY STATE INDEX
4296
DETERMINE LANE DEPARTURE WARNING COEFFICIENT
4298
SET ROAD CROSSING THRESHOLD
4299
4285
LANE DEPARTURE COEFFICIENT
25%
0%
1
2
3
4
BODY STATE INDEX

FIG. 61

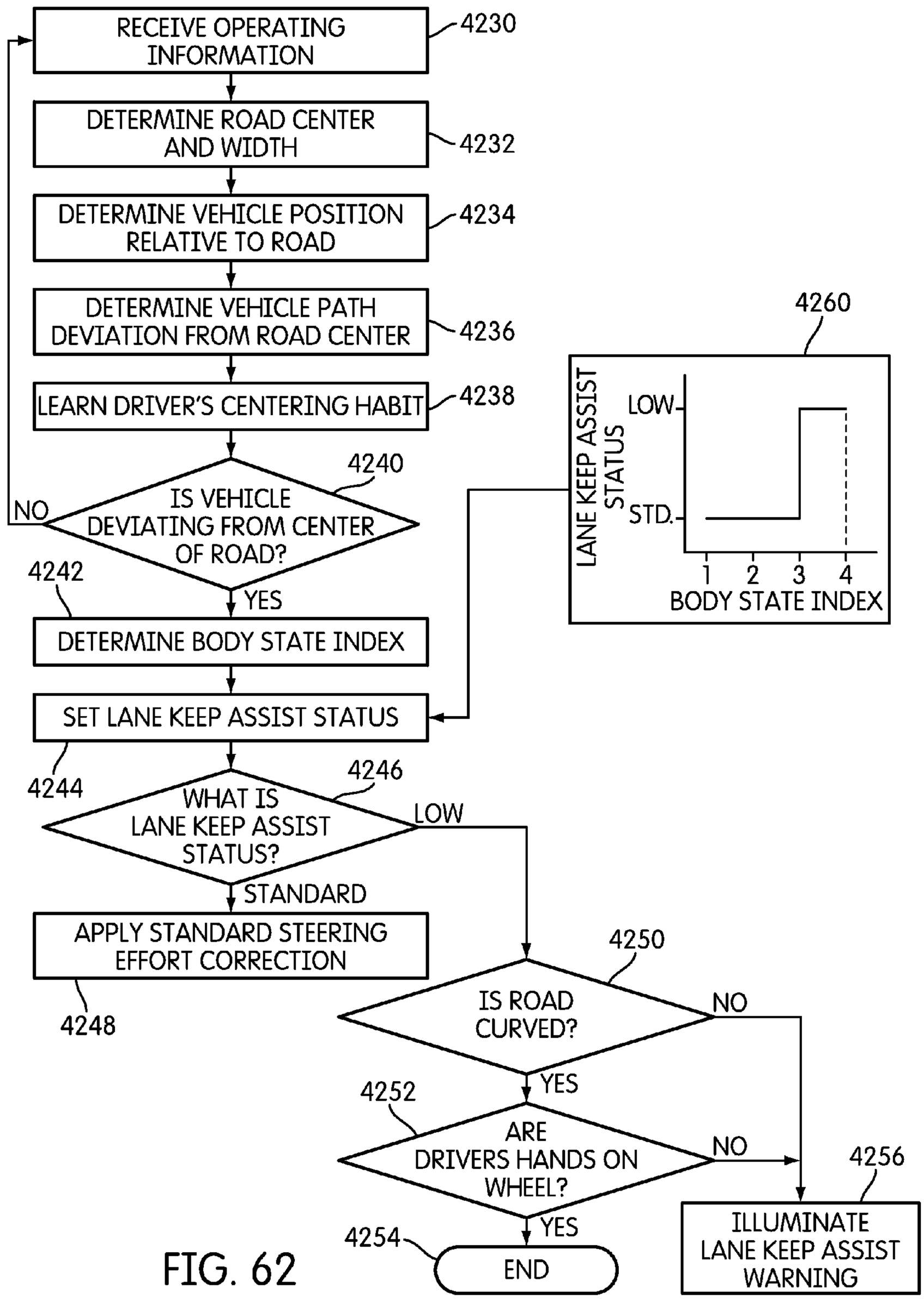
RECEIVE OPERATING INFORMATION
4230
DETERMINE ROAD CENTER AND WIDTH
4232
DETERMINE VEHICLE POSITION RELATIVE TO ROAD
4234
DETERMINE VEHICLE PATH DEVIATION FROM ROAD CENTER
4236
LEARN DRIVER'S CENTERING HABIT
4238
4240
IS VEHICLE DEVIATING FROM CENTER OF ROAD?
NO
YES
4242
DETERMINE BODY STATE INDEX
SET LANE KEEP ASSIST STATUS
4244
4246
WHAT IS LANE KEEP ASSIST STATUS?
LOW
STANDARD
APPLY STANDARD STEERING EFFORT CORRECTION
4248
4260
LANE KEEP ASSIST STATUS
LOW
STD.
1
2
3
4
BODY STATE INDEX
4250
IS ROAD CURVED?
NO
YES
4252
ARE DRIVERS HANDS ON WHEEL?
NO
YES
4256
ILLUMINATE LANE KEEP ASSIST WARNING
4254
END

FIG. 62

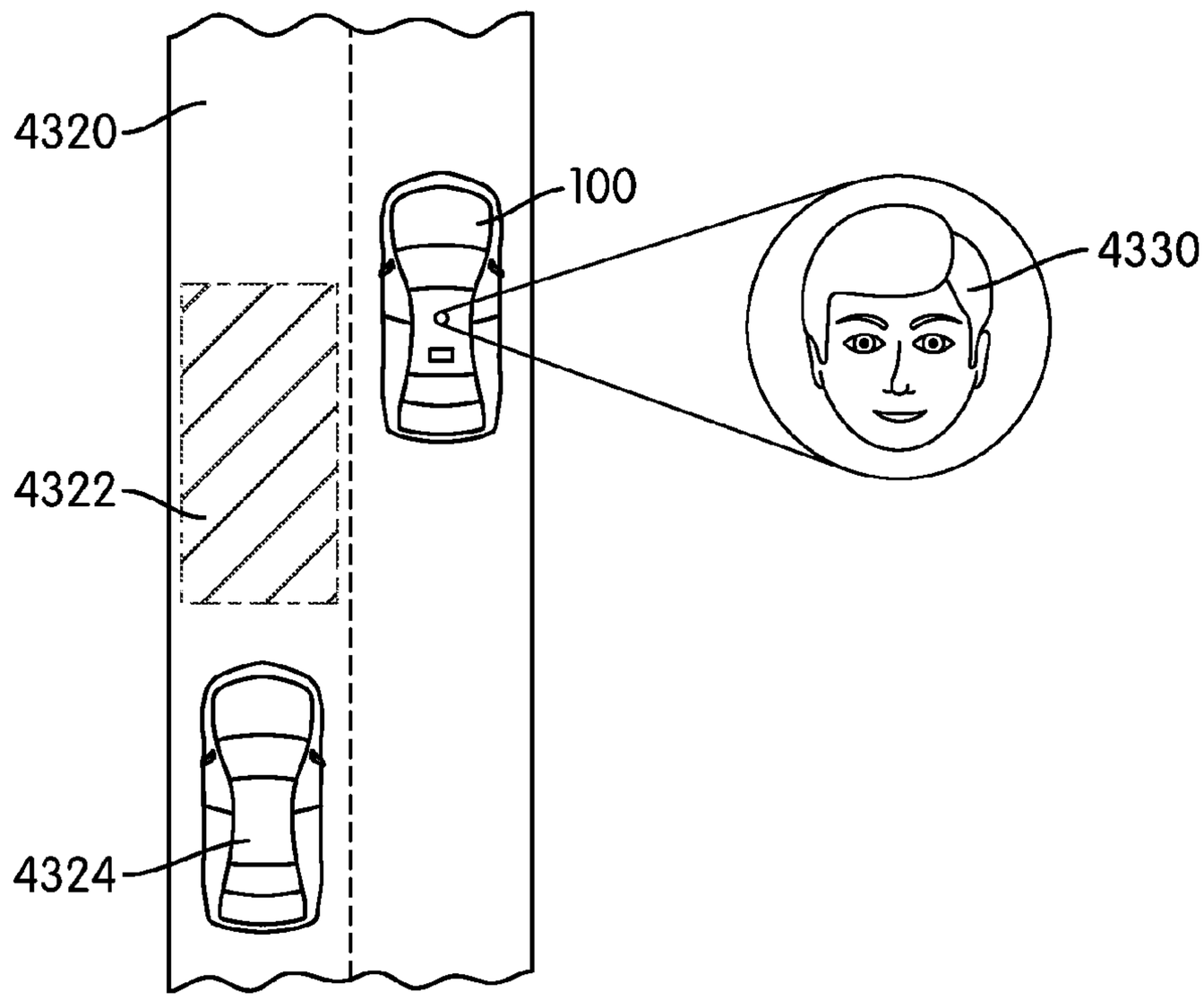

FIG. 63

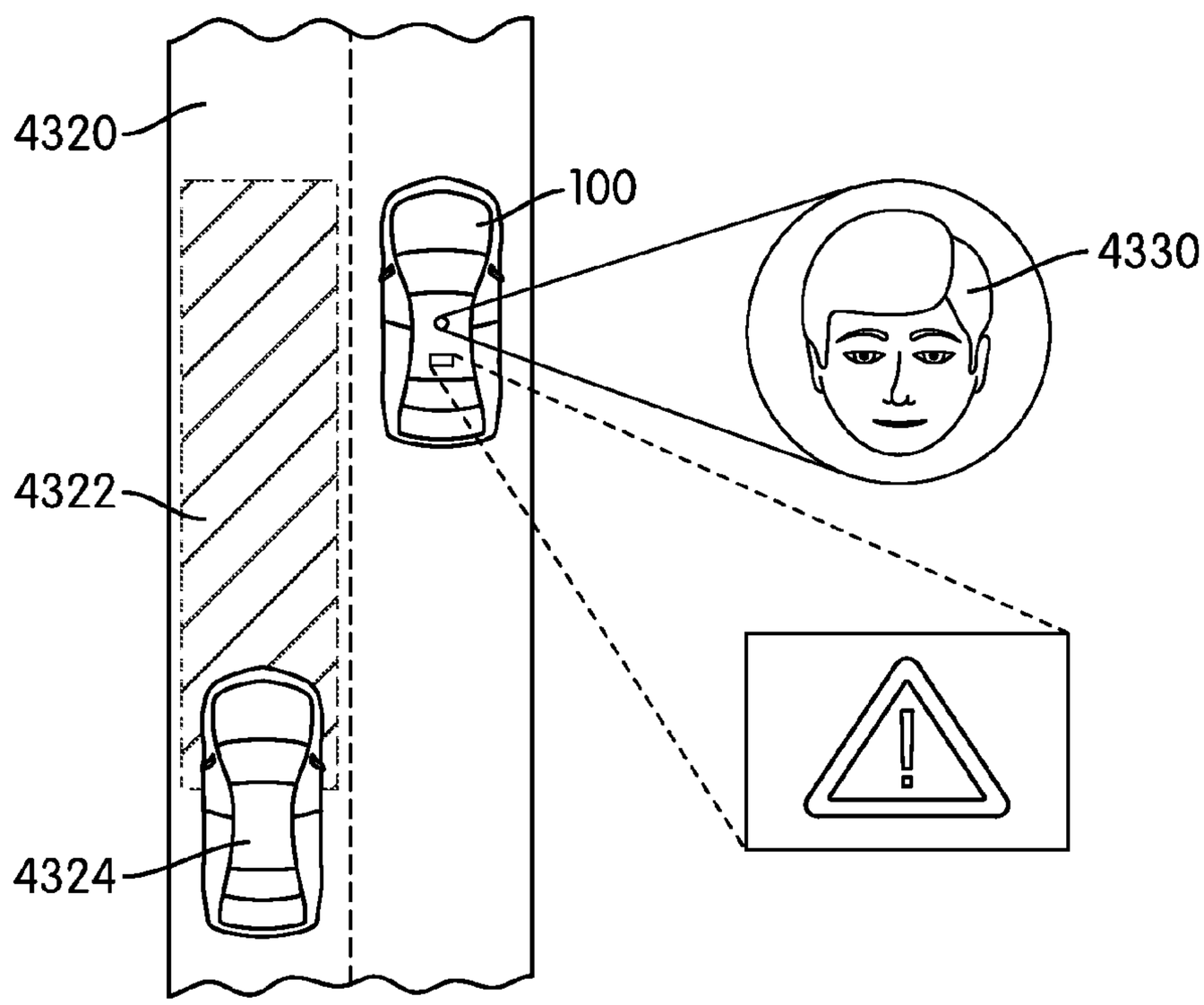

FIG. 64

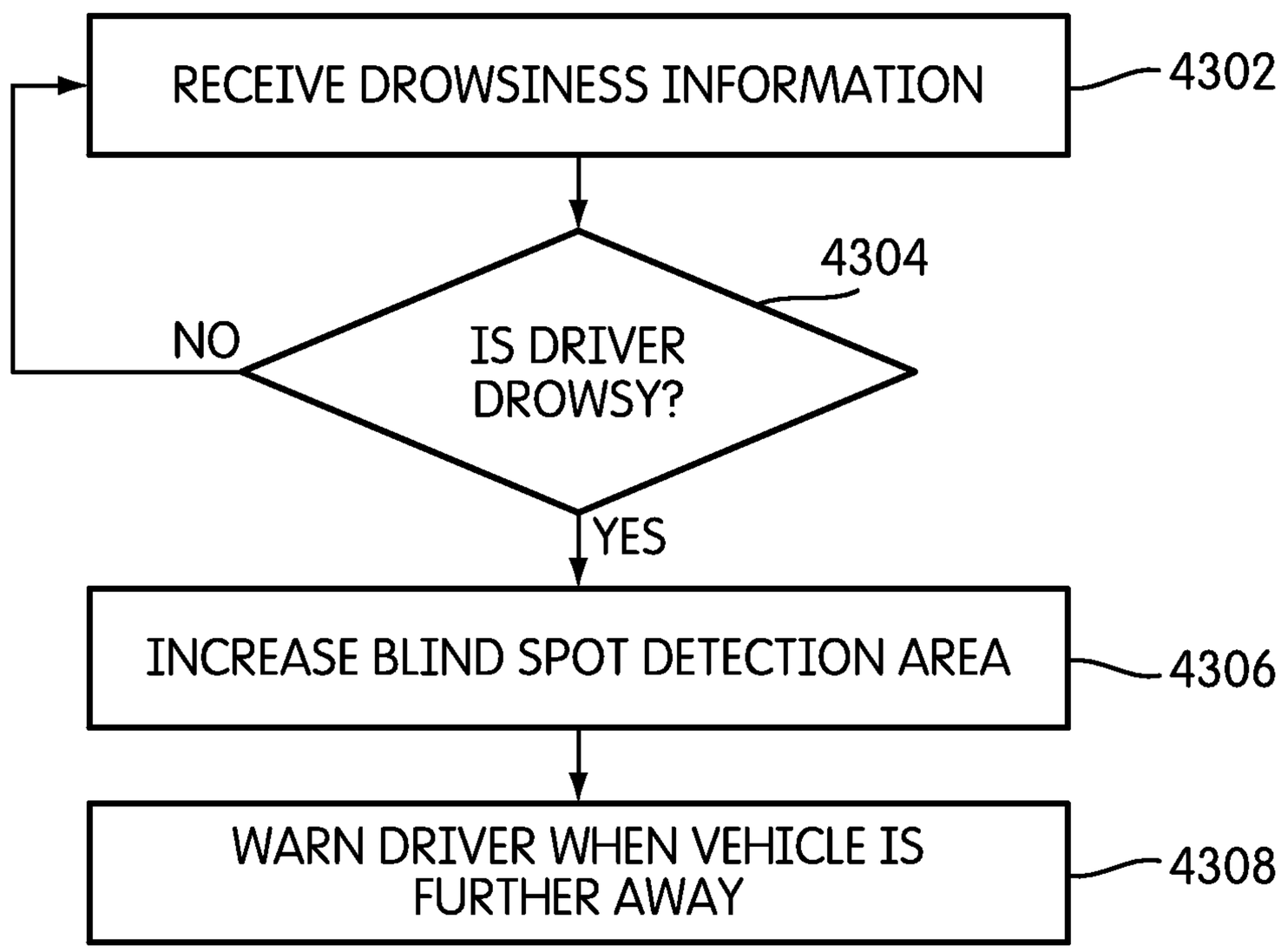
RECEIVE DROWSINESS INFORMATION
4302
4304
NO
IS DRIVER DROWSY?
YES
INCREASE BLIND SPOT DETECTION AREA
4306
WARN DRIVER WHEN VEHICLE IS FURTHER AWAY
4308

FIG. 65

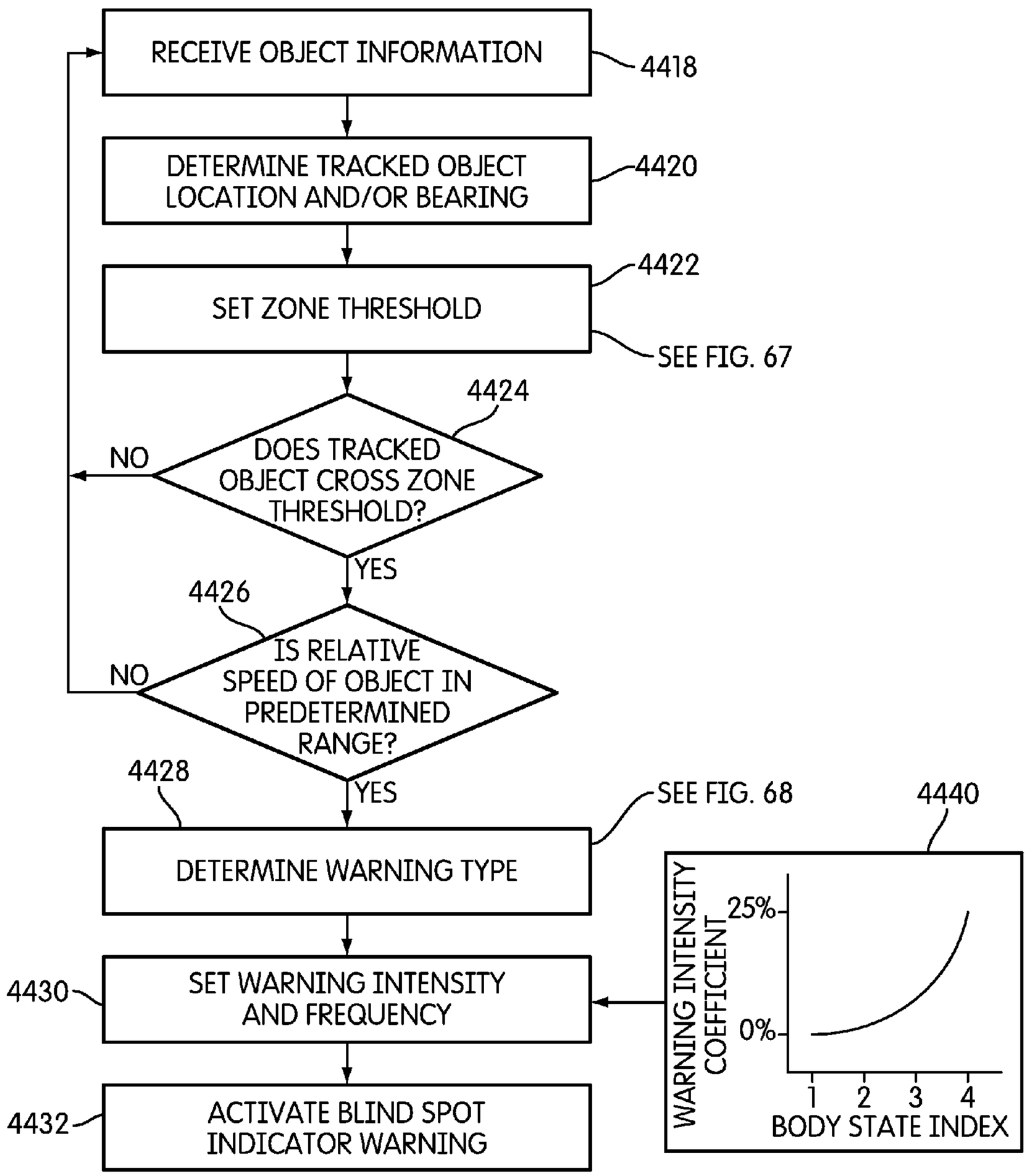
RECEIVE OBJECT INFORMATION
4418
DETERMINE TRACKED OBJECT LOCATION AND/OR BEARING
4420
SET ZONE THRESHOLD
4422
SEE FIG. 67
4424
DOES TRACKED OBJECT CROSS ZONE THRESHOLD?
NO
YES
4426
IS RELATIVE SPEED OF OBJECT IN PREDETERMINED RANGE?
NO
YES
4428
DETERMINE WARNING TYPE
SEE FIG. 68
4440
SET WARNING INTENSITY AND FREQUENCY
4430
ACTIVATE BLIND SPOT INDICATOR WARNING
4432
WARNING INTENSITY COEFFICIENT
25%
0%
1
2
3
4
BODY STATE INDEX

FIG. 66

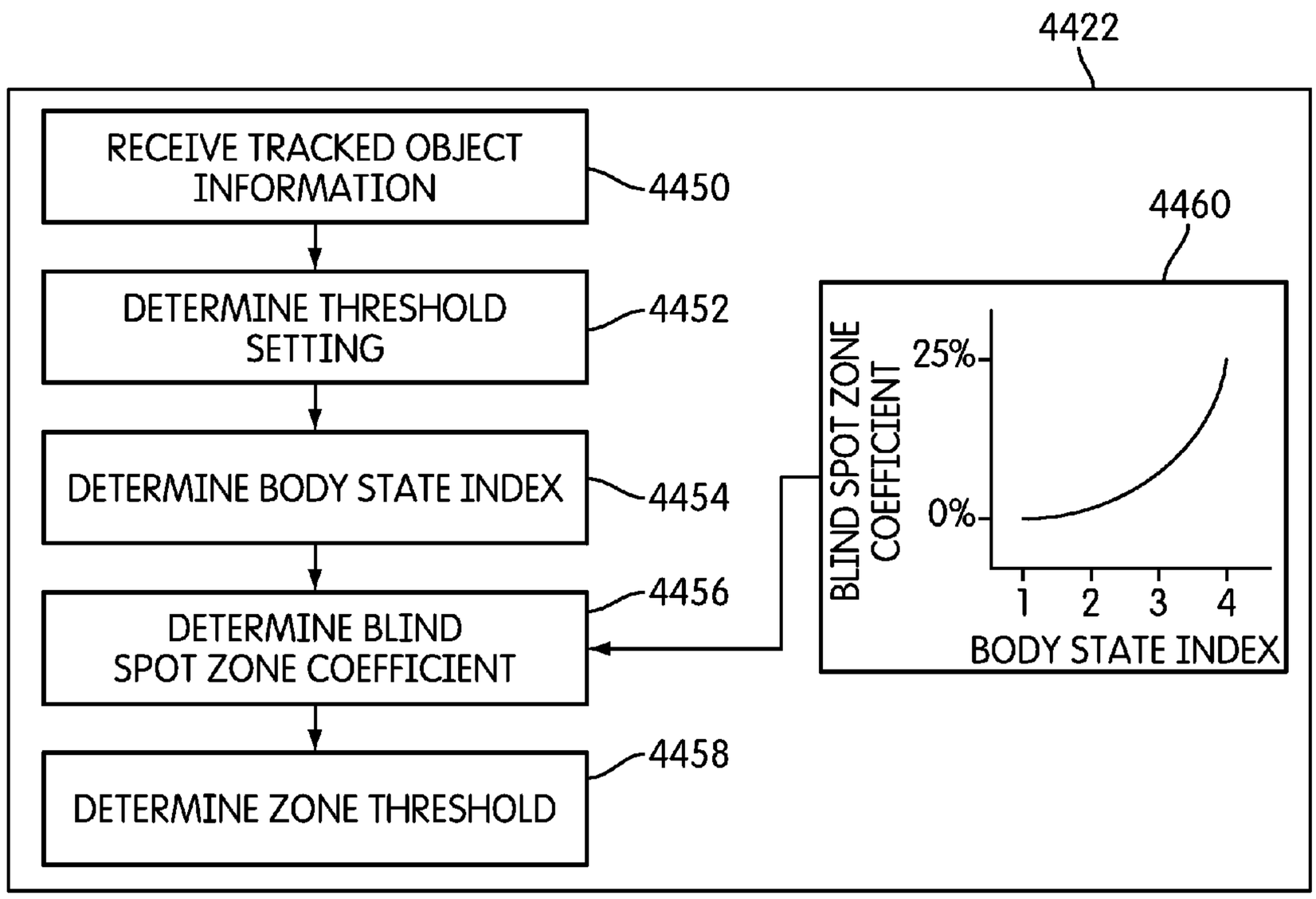

FIG. 67

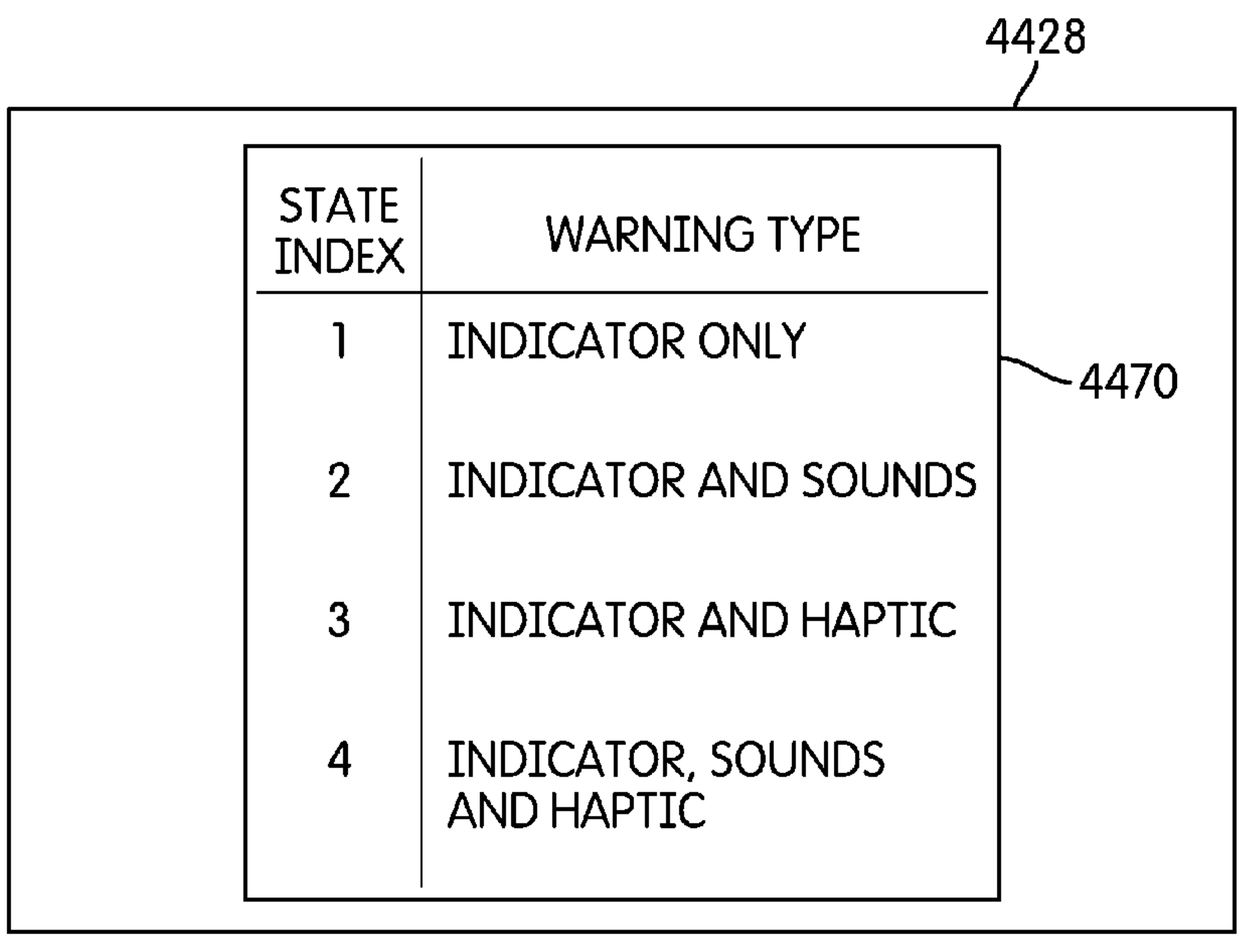

STATE INDEX	WARNING TYPE
1	INDICATOR ONLY
2	INDICATOR AND SOUNDS
3	INDICATOR AND HAPTIC
4	INDICATOR, SOUNDS AND HAPTIC

FIG. 68

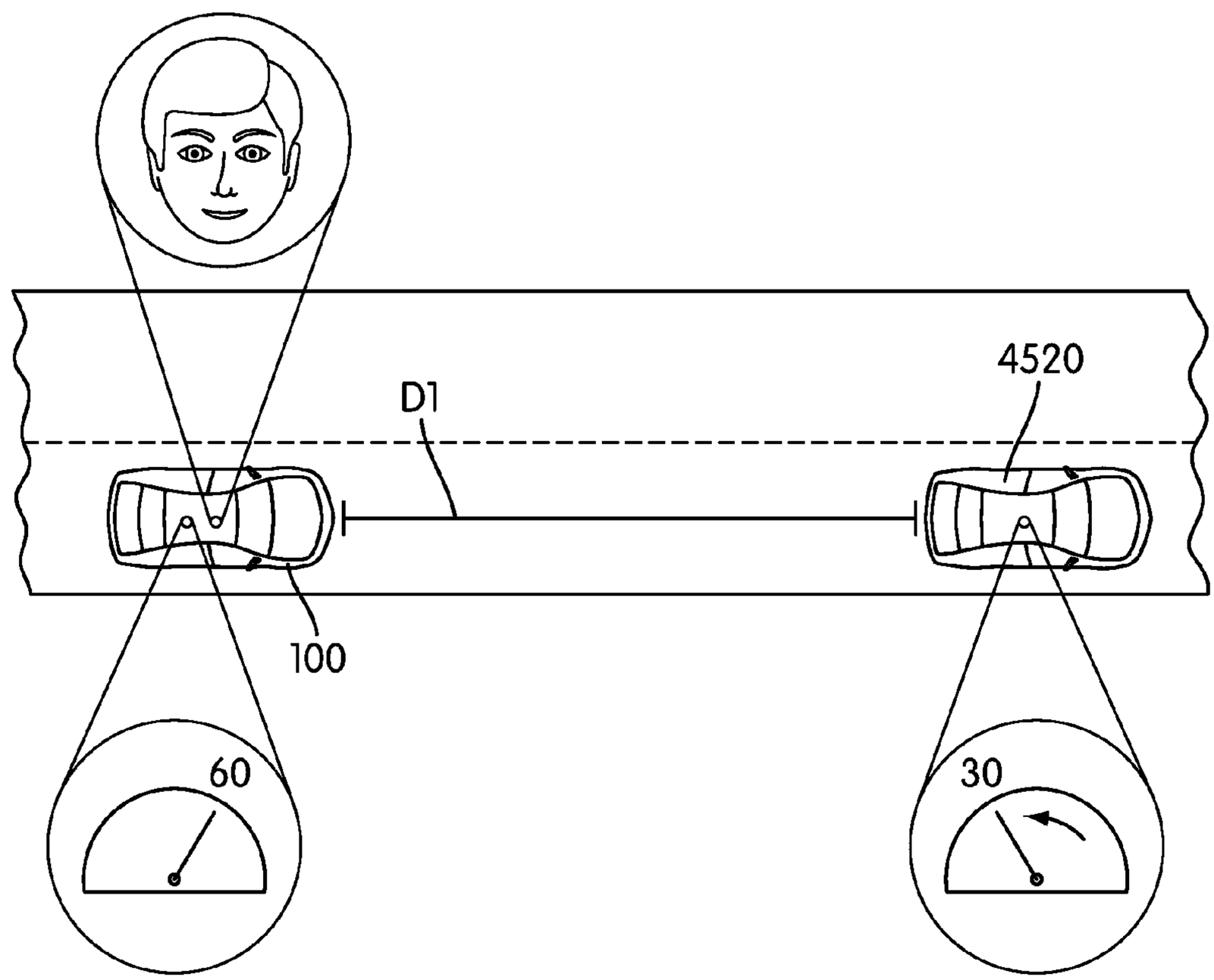

FIG. 69

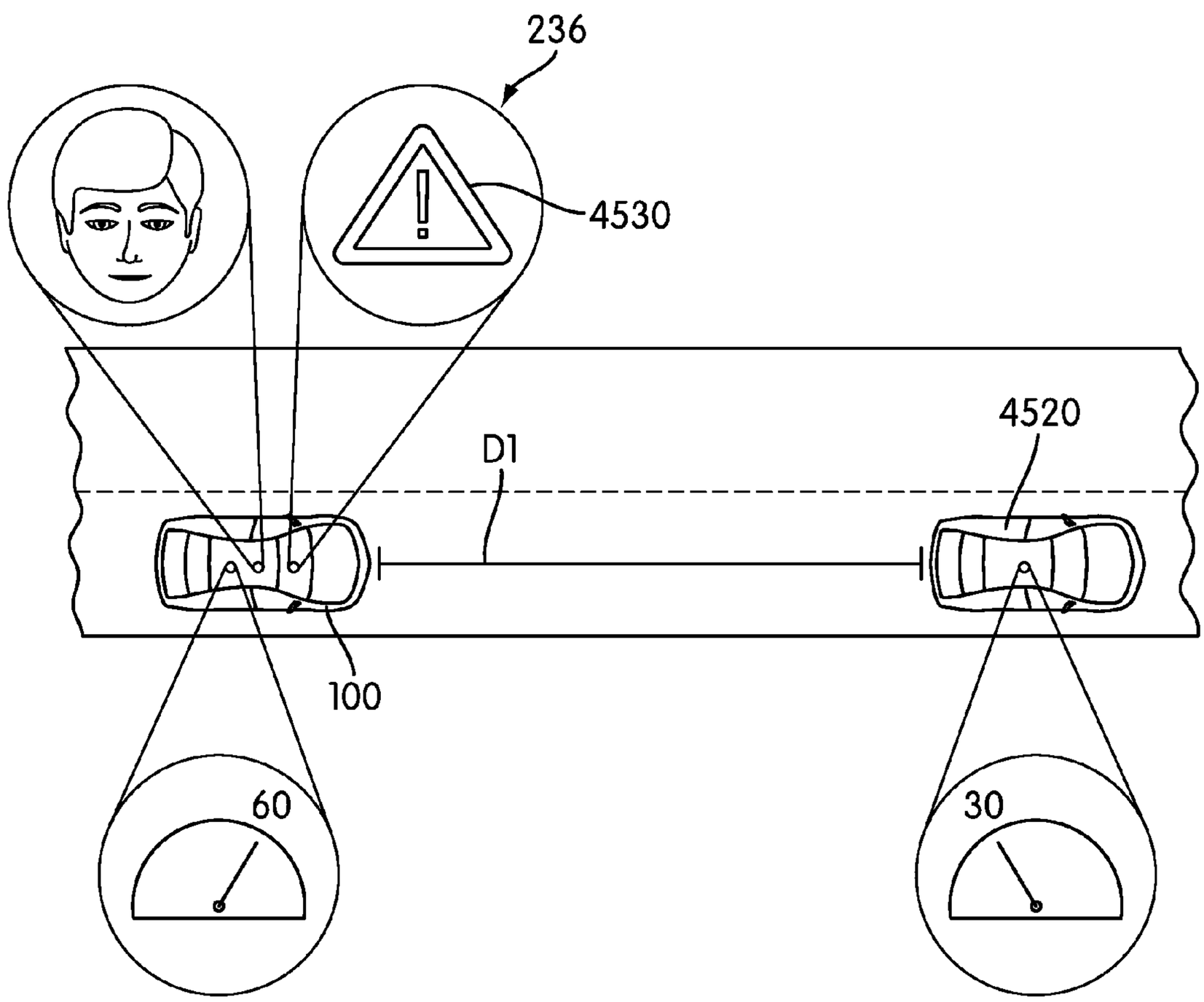

FIG. 70

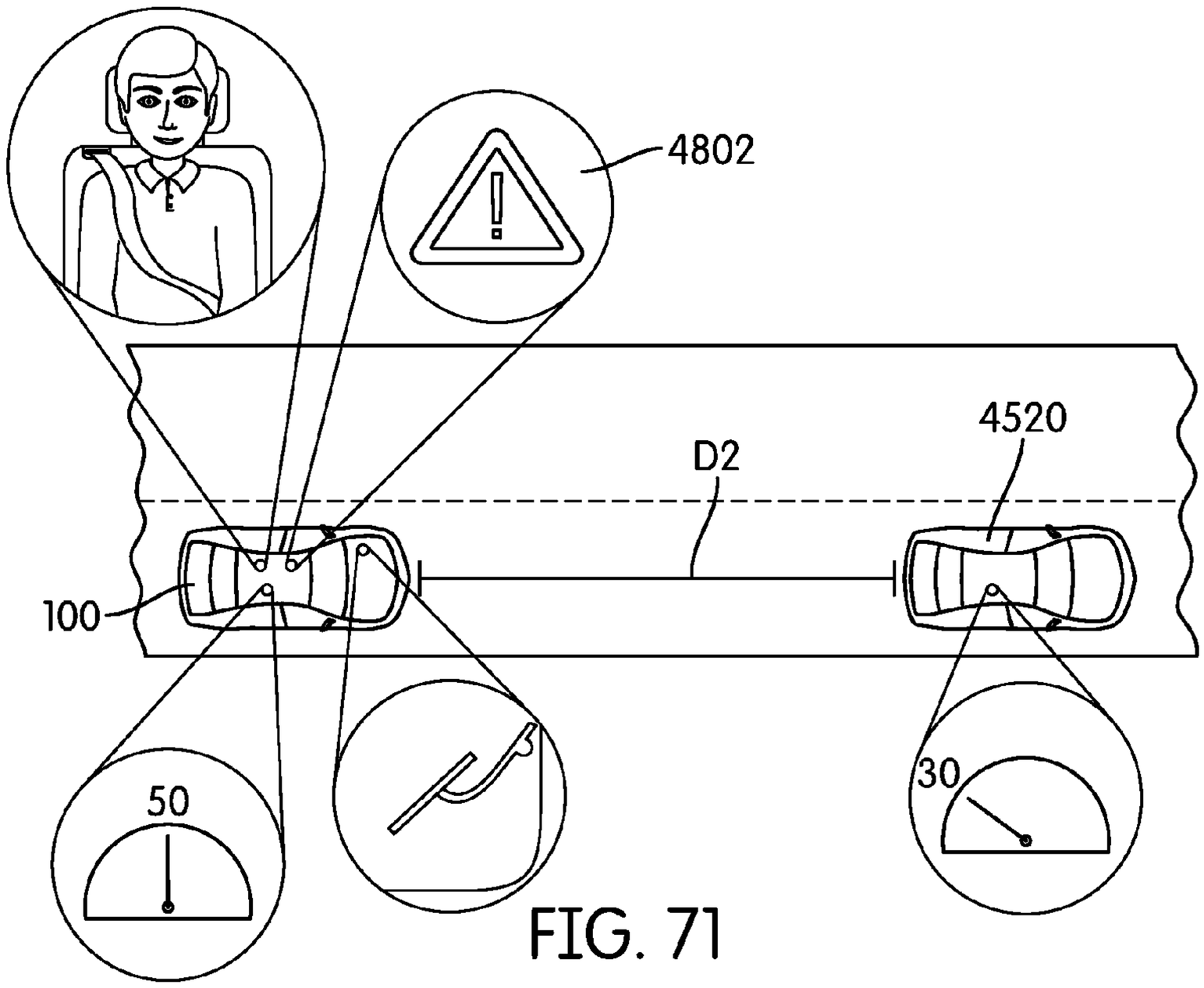

FIG. 71

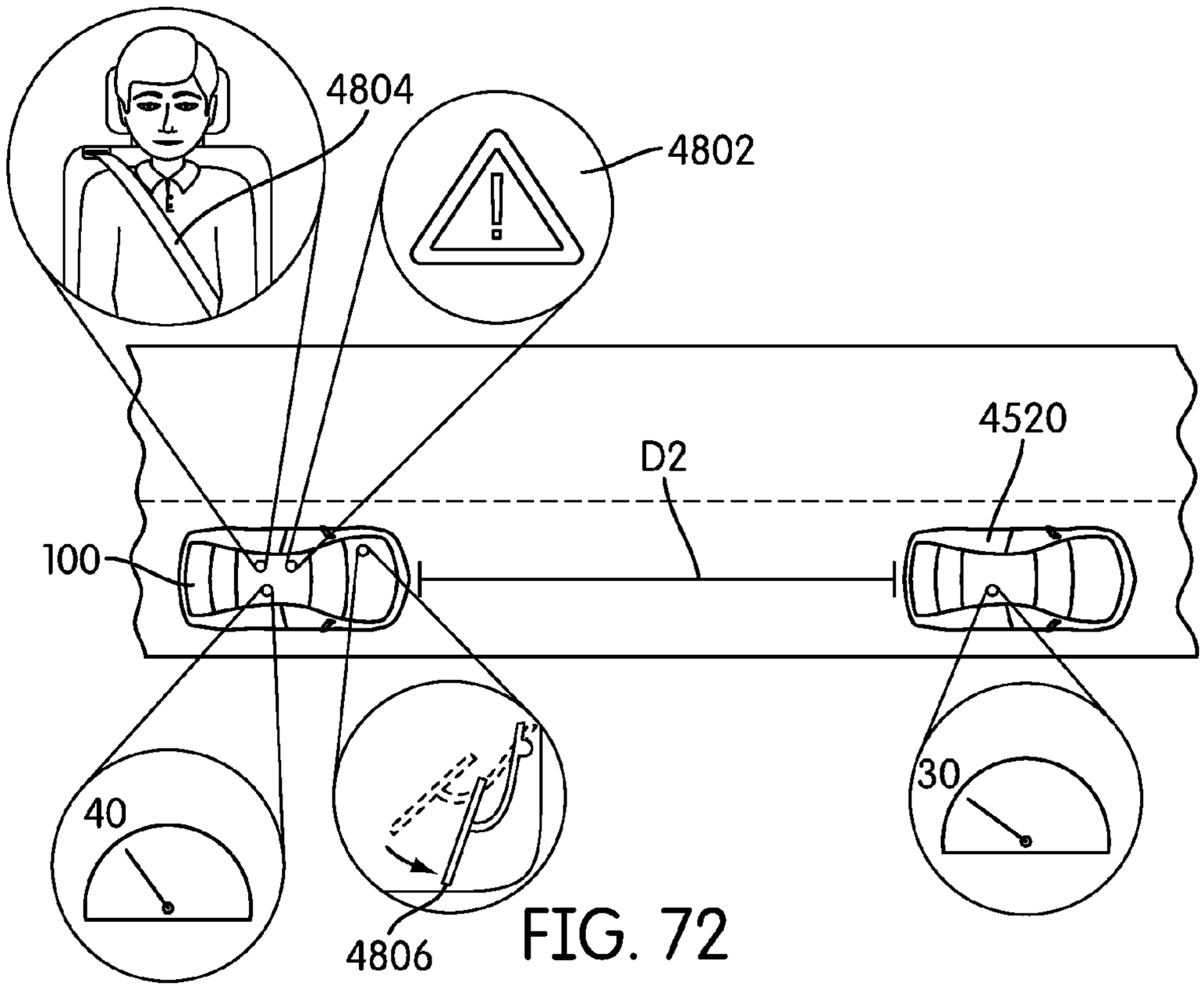

FIG. 72

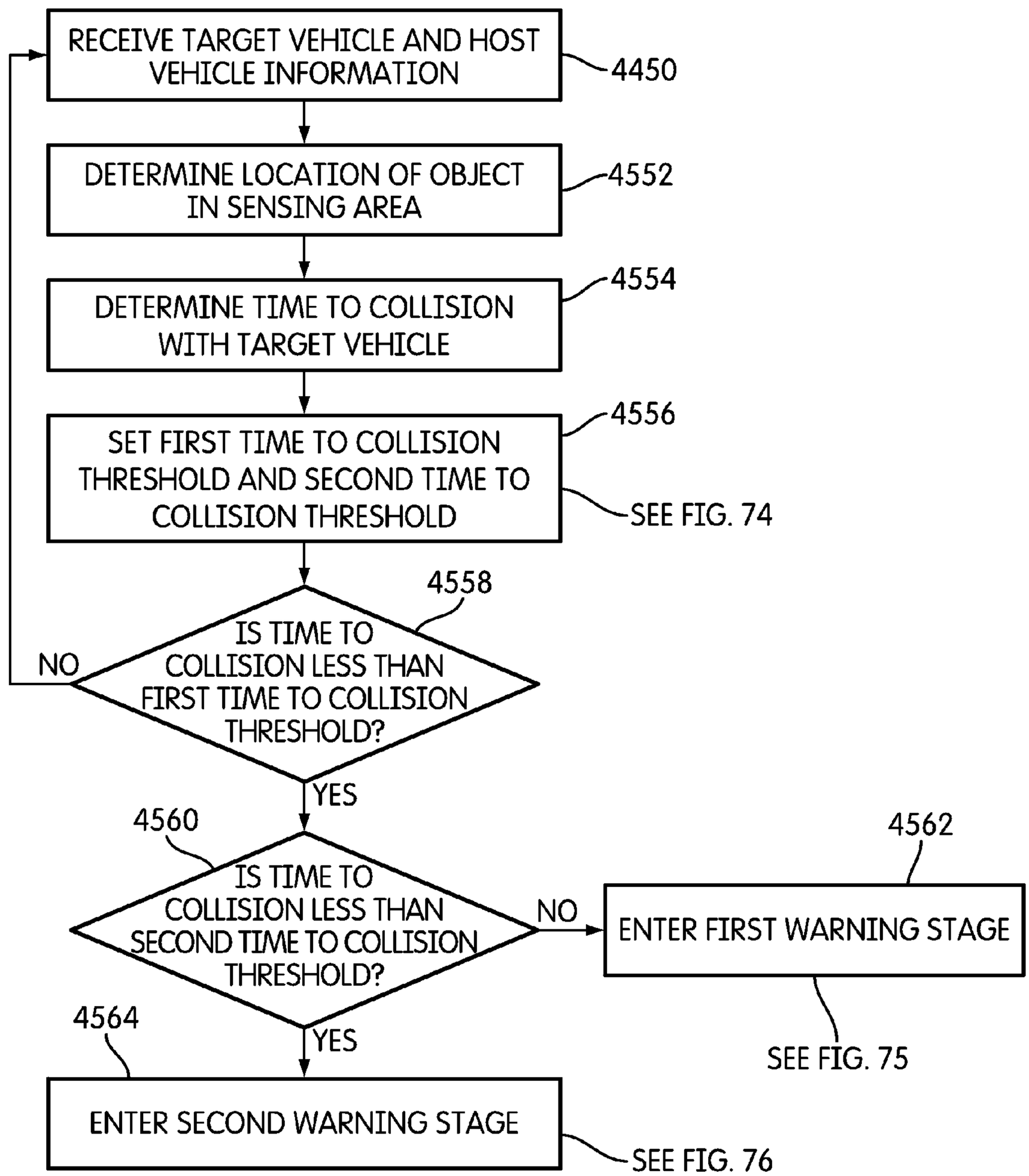
RECEIVE TARGET VEHICLE AND HOST VEHICLE INFORMATION
4450
DETERMINE LOCATION OF OBJECT IN SENSING AREA
4552
DETERMINE TIME TO COLLISION WITH TARGET VEHICLE
4554
SET FIRST TIME TO COLLISION THRESHOLD AND SECOND TIME TO COLLISION THRESHOLD
4556
SEE FIG. 74
4558
IS TIME TO COLLISION LESS THAN FIRST TIME TO COLLISION THRESHOLD?
NO
YES
4560
IS TIME TO COLLISION LESS THAN SECOND TIME TO COLLISION THRESHOLD?
NO
4562
ENTER FIRST WARNING STAGE
SEE FIG. 75
YES
4564
ENTER SECOND WARNING STAGE
SEE FIG. 76

FIG. 73

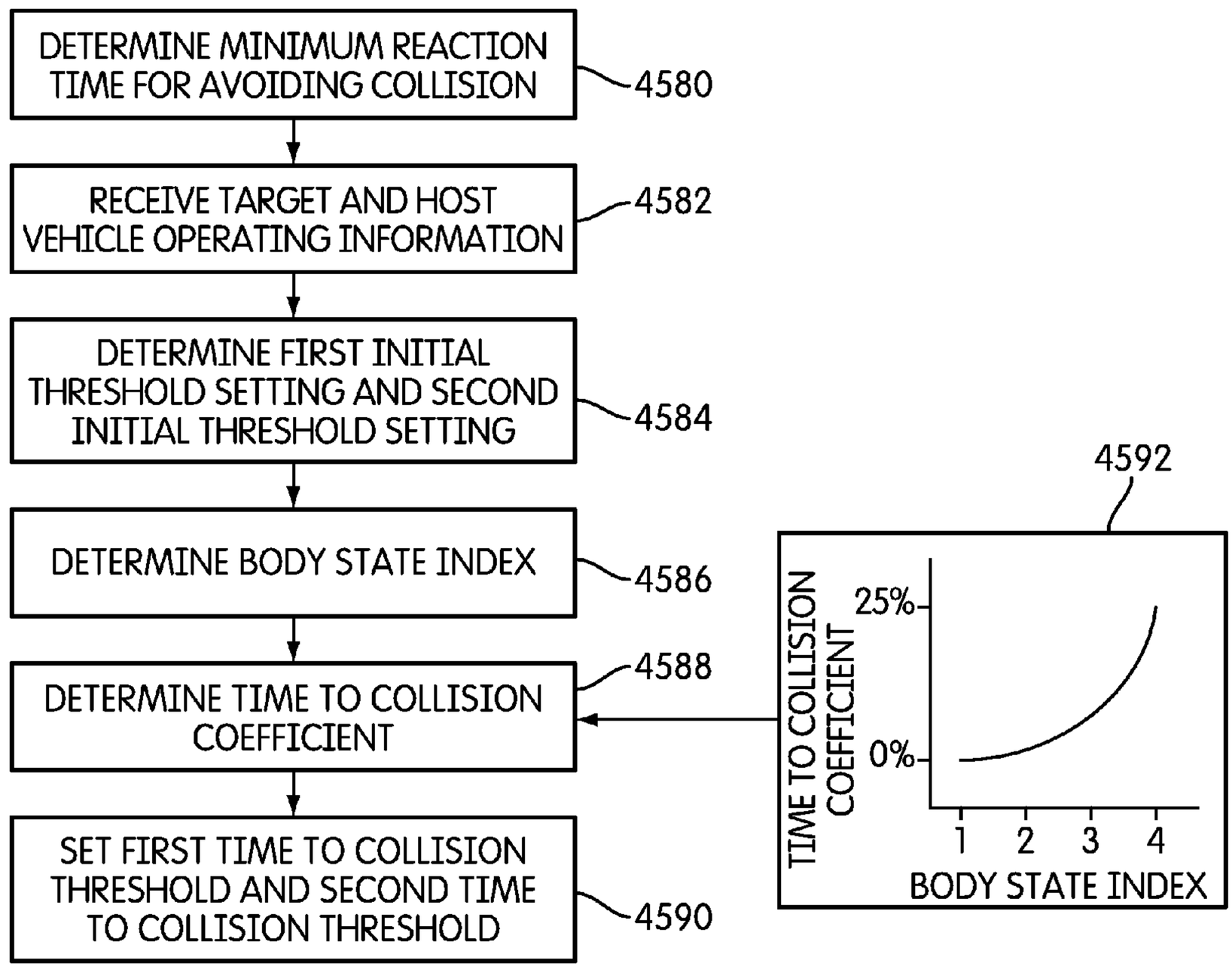
DETERMINE MINIMUM REACTION TIME FOR AVOIDING COLLISION
4580
RECEIVE TARGET AND HOST VEHICLE OPERATING INFORMATION
4582
DETERMINE FIRST INITIAL THRESHOLD SETTING AND SECOND INITIAL THRESHOLD SETTING
4584
DETERMINE BODY STATE INDEX
4586
DETERMINE TIME TO COLLISION COEFFICIENT
4588
SET FIRST TIME TO COLLISION THRESHOLD AND SECOND TIME TO COLLISION THRESHOLD
4590
4592
TIME TO COLLISION COEFFICIENT
25%
0%
1
2
3
4
BODY STATE INDEX

FIG. 74

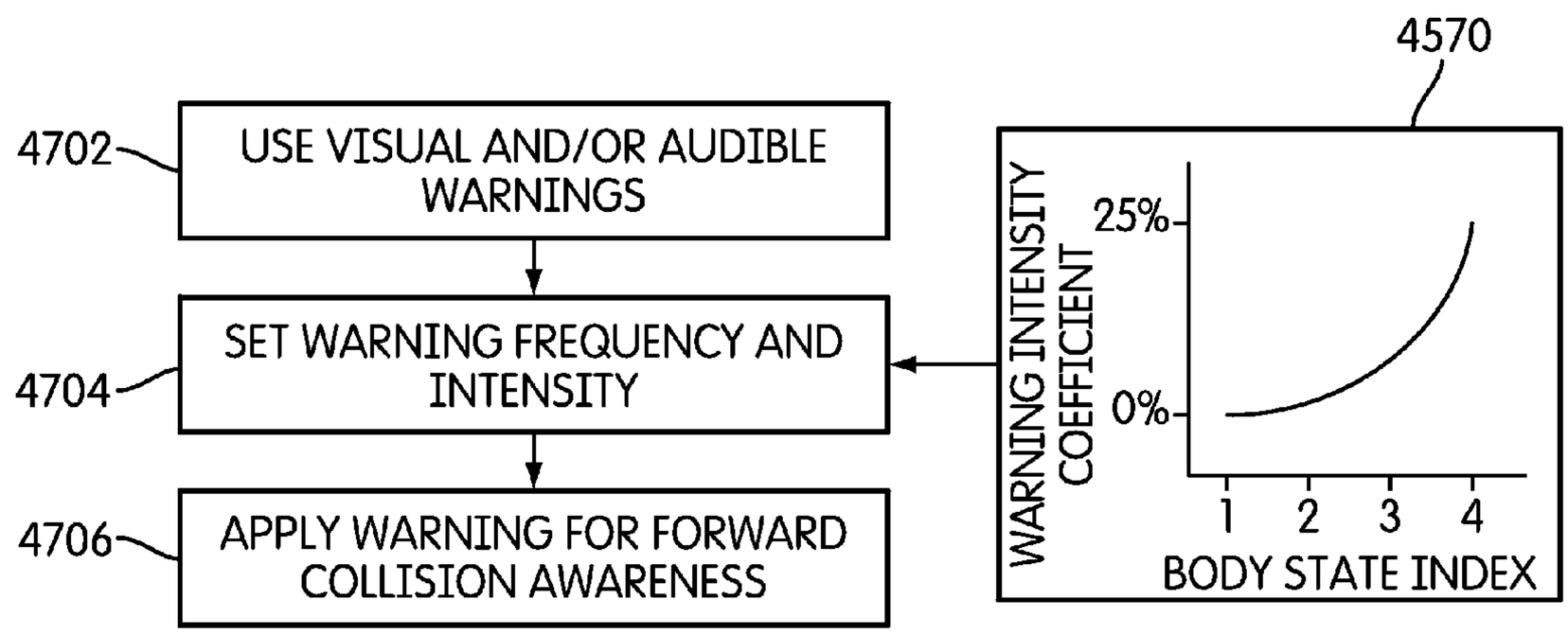
4702
USE VISUAL AND/OR AUDIBLE WARNINGS
4704
SET WARNING FREQUENCY AND INTENSITY
4706
APPLY WARNING FOR FORWARD COLLISION AWARENESS
4570
WARNING INTENSITY COEFFICIENT
25%
0%
1
2
3
4
BODY STATE INDEX

FIG. 75

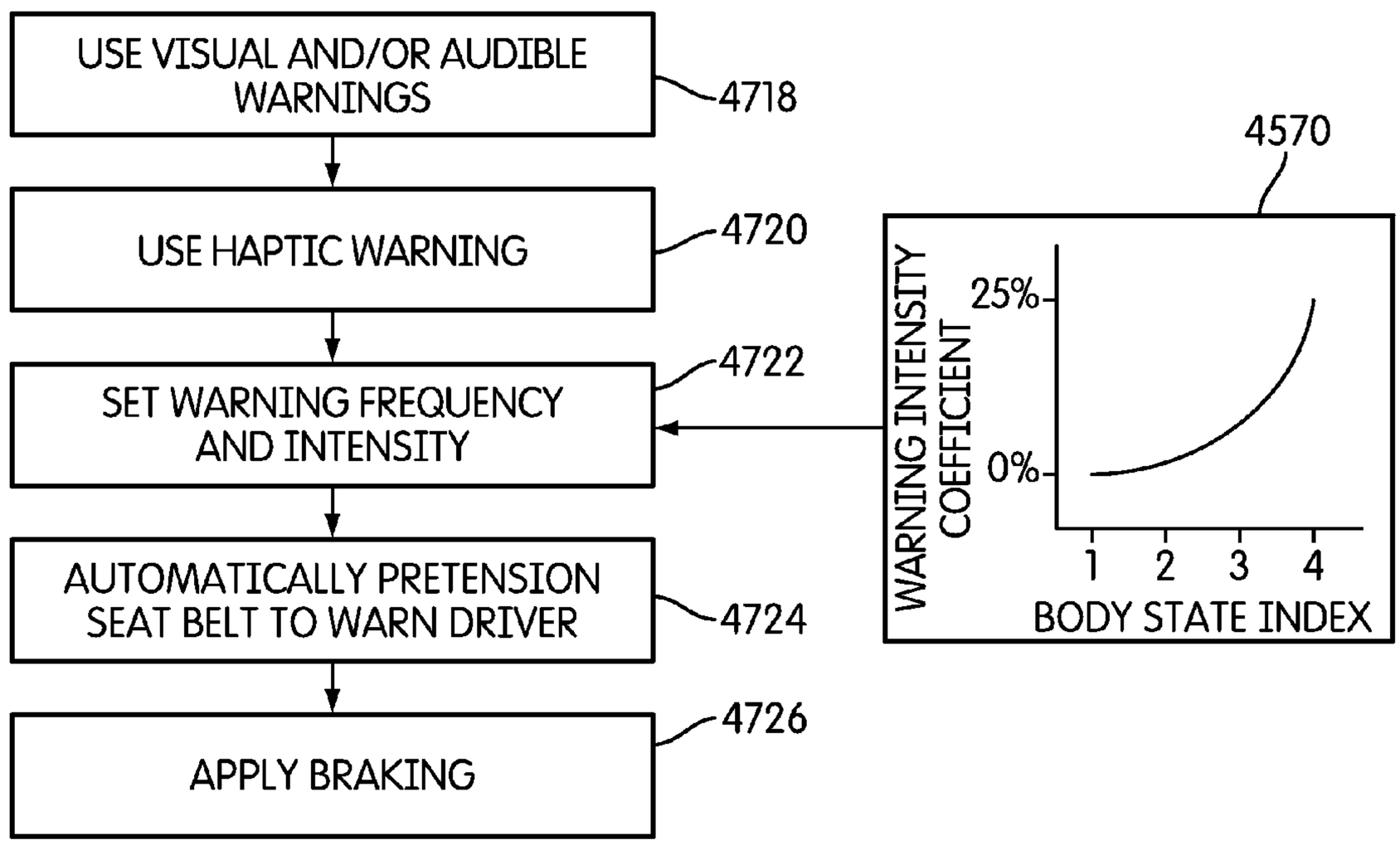
USE VISUAL AND/OR AUDIBLE WARNINGS
4718
USE HAPTIC WARNING
4720
SET WARNING FREQUENCY AND INTENSITY
4722
AUTOMATICALLY PRETENSION SEAT BELT TO WARN DRIVER
4724
APPLY BRAKING
4726
4570
WARNING INTENSITY COEFFICIENT
25%
0%
1
2
3
4
BODY STATE INDEX

FIG. 76

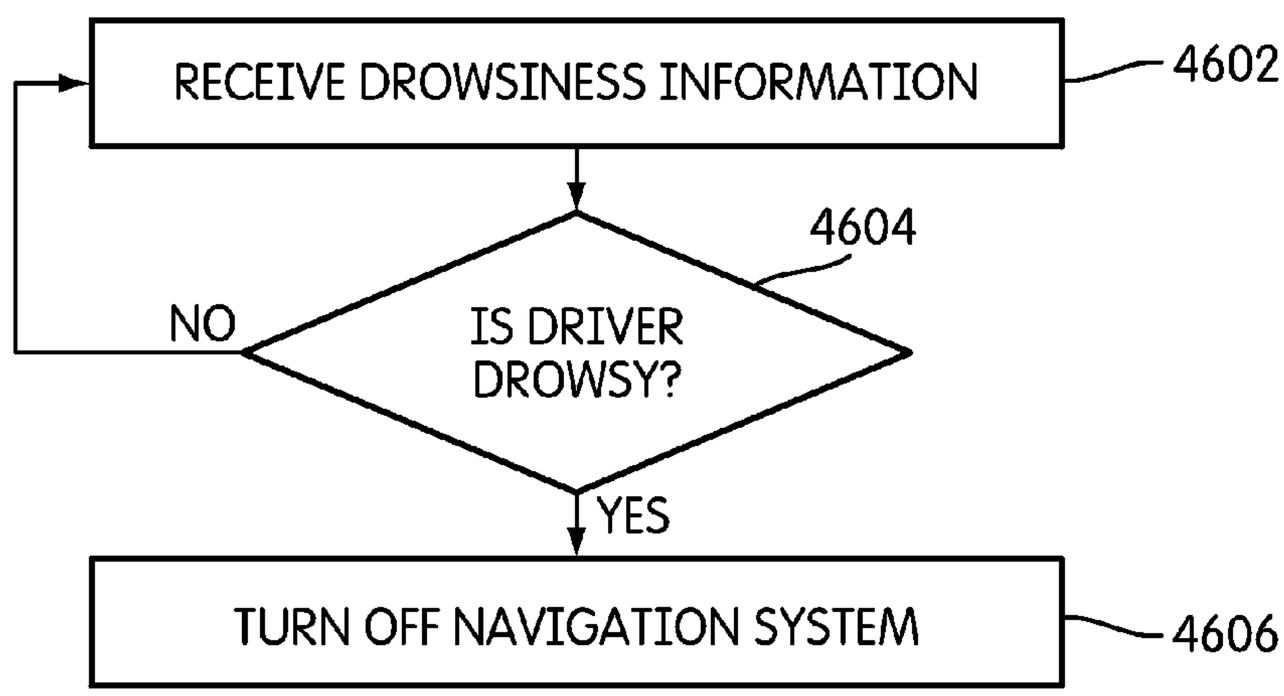
RECEIVE DROWSINESS INFORMATION
4602
4604
IS DRIVER DROWSY?
NO
YES
TURN OFF NAVIGATION SYSTEM
4606

FIG. 77

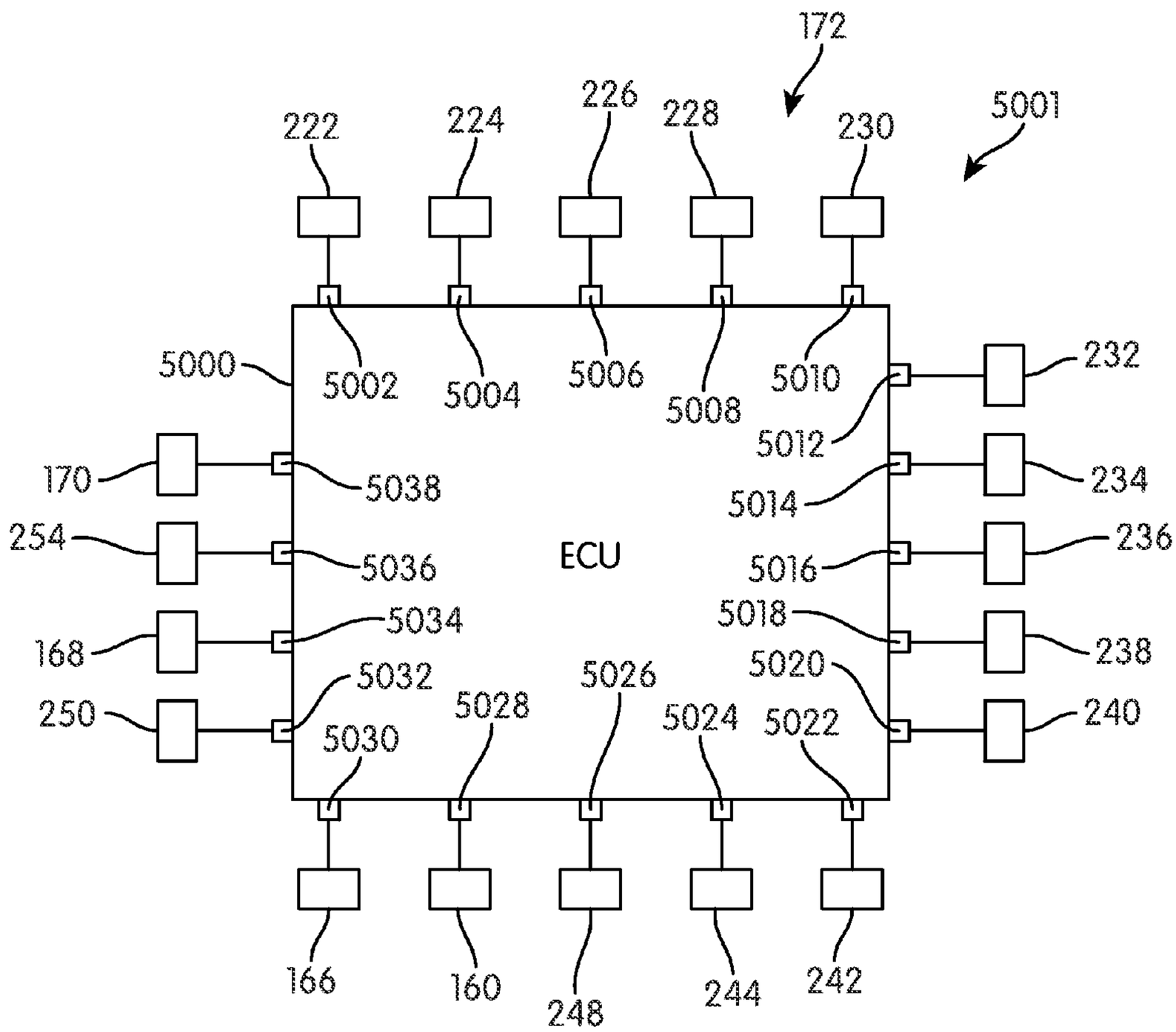
172
5001
222
224
226
228
230
5000
5002
5004
5006
5008
5010
5012
5014
5016
5018
5020
5022
5024
5026
5028
5030
5032
5034
5036
5038
ECU
232
234
236
238
240
170
254
168
250
166
160
248
244
242

FIG. 78

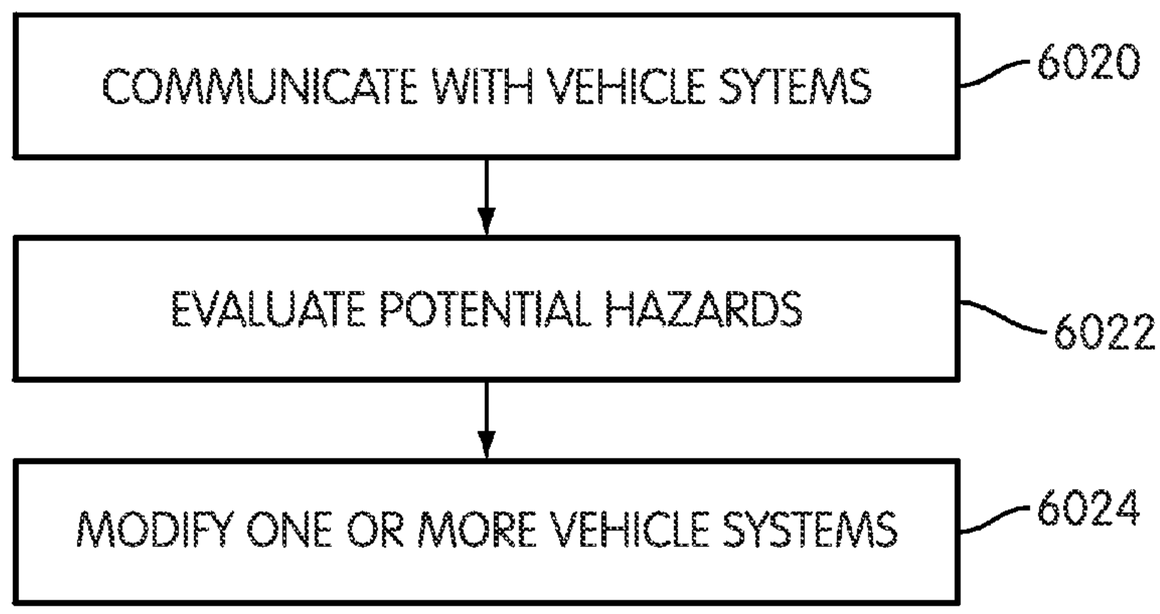
COMMUNICATE WITH VEHICLE SYTEMS
6020
EVALUATE POTENTIAL HAZARDS
6022
MODIFY ONE OR MORE VEHICLE SYSTEMS
6024

FIG. 79

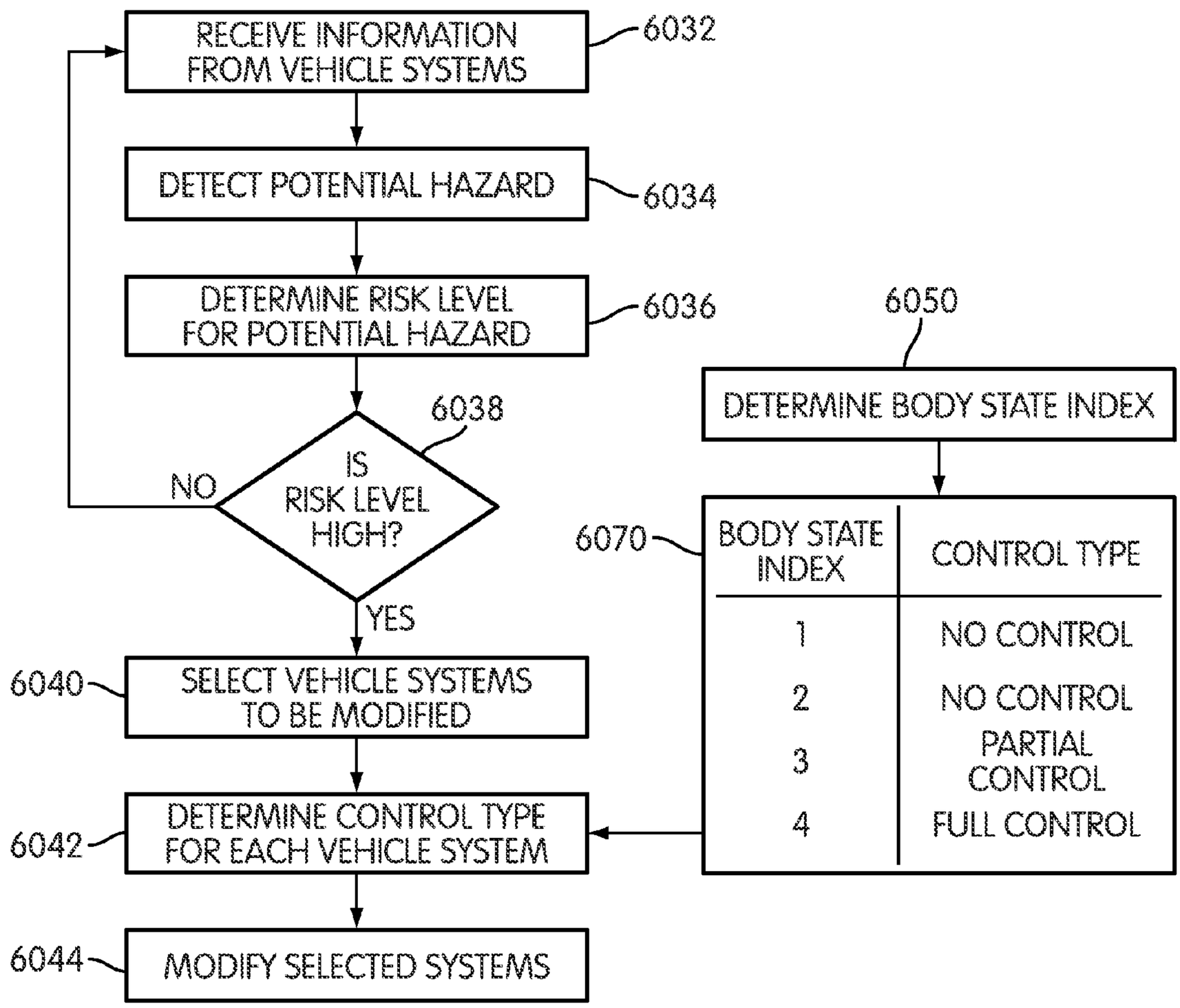
RECEIVE INFORMATION FROM VEHICLE SYSTEMS
6032
DETECT POTENTIAL HAZARD
6034
DETERMINE RISK LEVEL FOR POTENTIAL HAZARD
6036
6038
IS RISK LEVEL HIGH?
NO
YES
6040
SELECT VEHICLE SYSTEMS TO BE MODIFIED
6042
DETERMINE CONTROL TYPE FOR EACH VEHICLE SYSTEM
6044
MODIFY SELECTED SYSTEMS
6050
DETERMINE BODY STATE INDEX
6070
BODY STATE INDEX
CONTROL TYPE
1
NO CONTROL
2
NO CONTROL
3
PARTIAL CONTROL
4
FULL CONTROL

FIG. 80

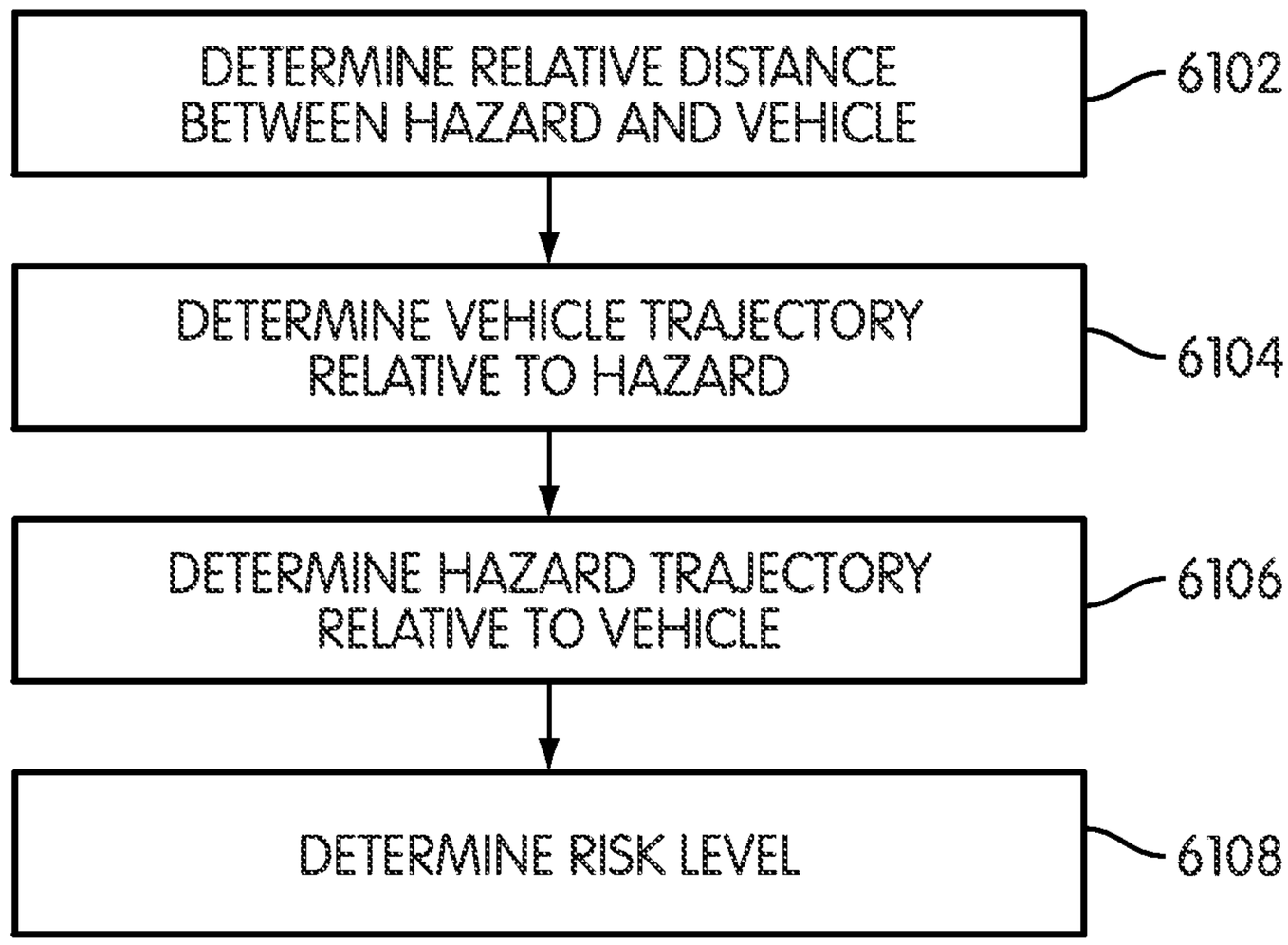
DETERMINE RELATIVE DISTANCE BETWEEN HAZARD AND VEHICLE
6102
DETERMINE VEHICLE TRAJECTORY RELATIVE TO HAZARD
6104
DETERMINE HAZARD TRAJECTORY RELATIVE TO VEHICLE
6106
DETERMINE RISK LEVEL
6108

FIG. 81

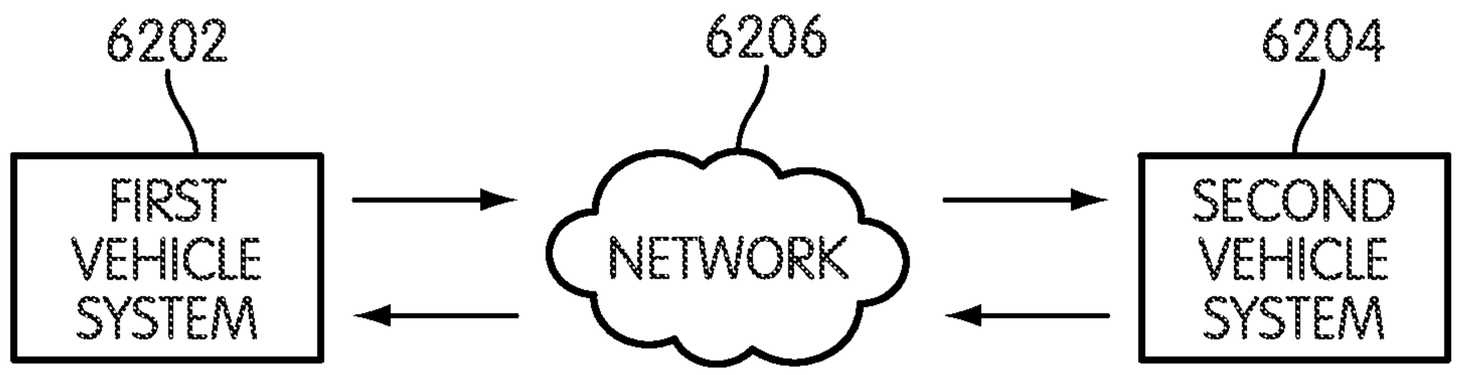
6202
6206
6204
FIRST VEHICLE SYSTEM
NETWORK
SECOND VEHICLE SYSTEM

FIG. 82

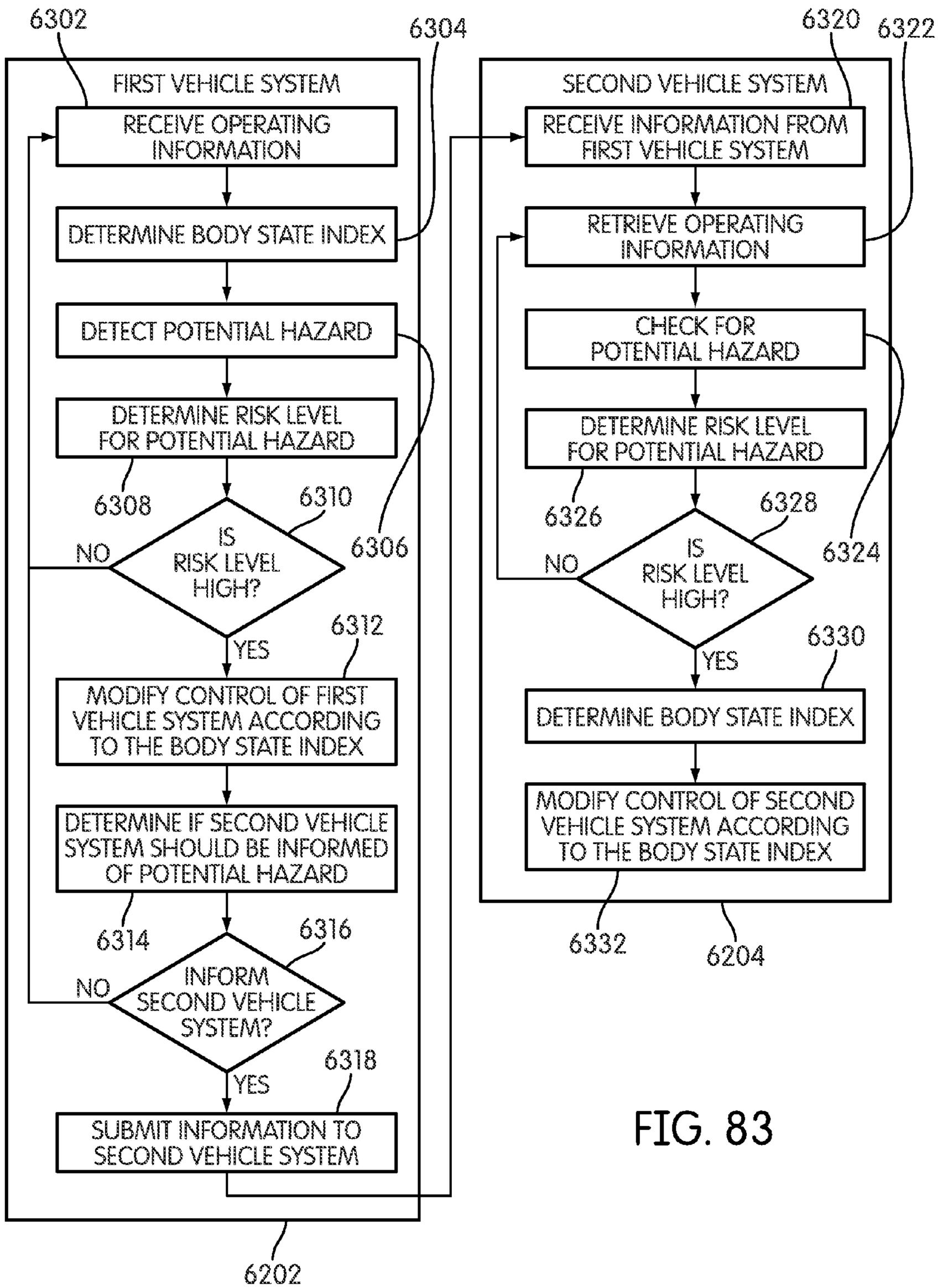
6302
6304
6320
6322
FIRST VEHICLE SYSTEM
RECEIVE OPERATING INFORMATION
DETERMINE BODY STATE INDEX
DETECT POTENTIAL HAZARD
DETERMINE RISK LEVEL FOR POTENTIAL HAZARD
6308
6310
IS RISK LEVEL HIGH?
NO
6306
YES
6312
MODIFY CONTROL OF FIRST VEHICLE SYSTEM ACCORDING TO THE BODY STATE INDEX
DETERMINE IF SECOND VEHICLE SYSTEM SHOULD BE INFORMED OF POTENTIAL HAZARD
6314
6316
INFORM SECOND VEHICLE SYSTEM?
NO
YES
6318
SUBMIT INFORMATION TO SECOND VEHICLE SYSTEM
6202
SECOND VEHICLE SYSTEM
RECEIVE INFORMATION FROM FIRST VEHICLE SYSTEM
RETRIEVE OPERATING INFORMATION
CHECK FOR POTENTIAL HAZARD
DETERMINE RISK LEVEL FOR POTENTIAL HAZARD
6326
6328
IS RISK LEVEL HIGH?
NO
6324
YES
6330
DETERMINE BODY STATE INDEX
MODIFY CONTROL OF SECOND VEHICLE SYSTEM ACCORDING TO THE BODY STATE INDEX
6332
6204

FIG. 83

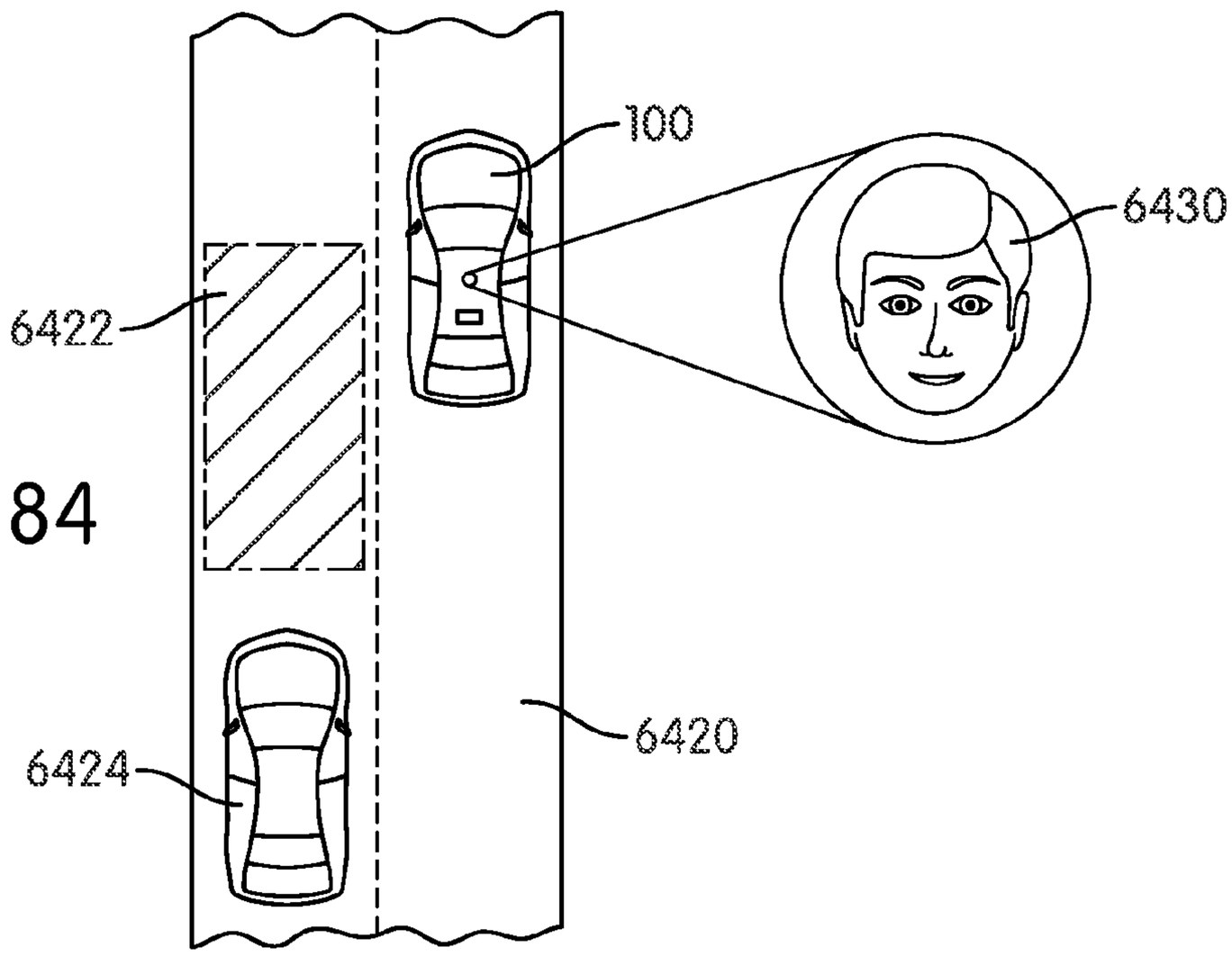

FIG. 84

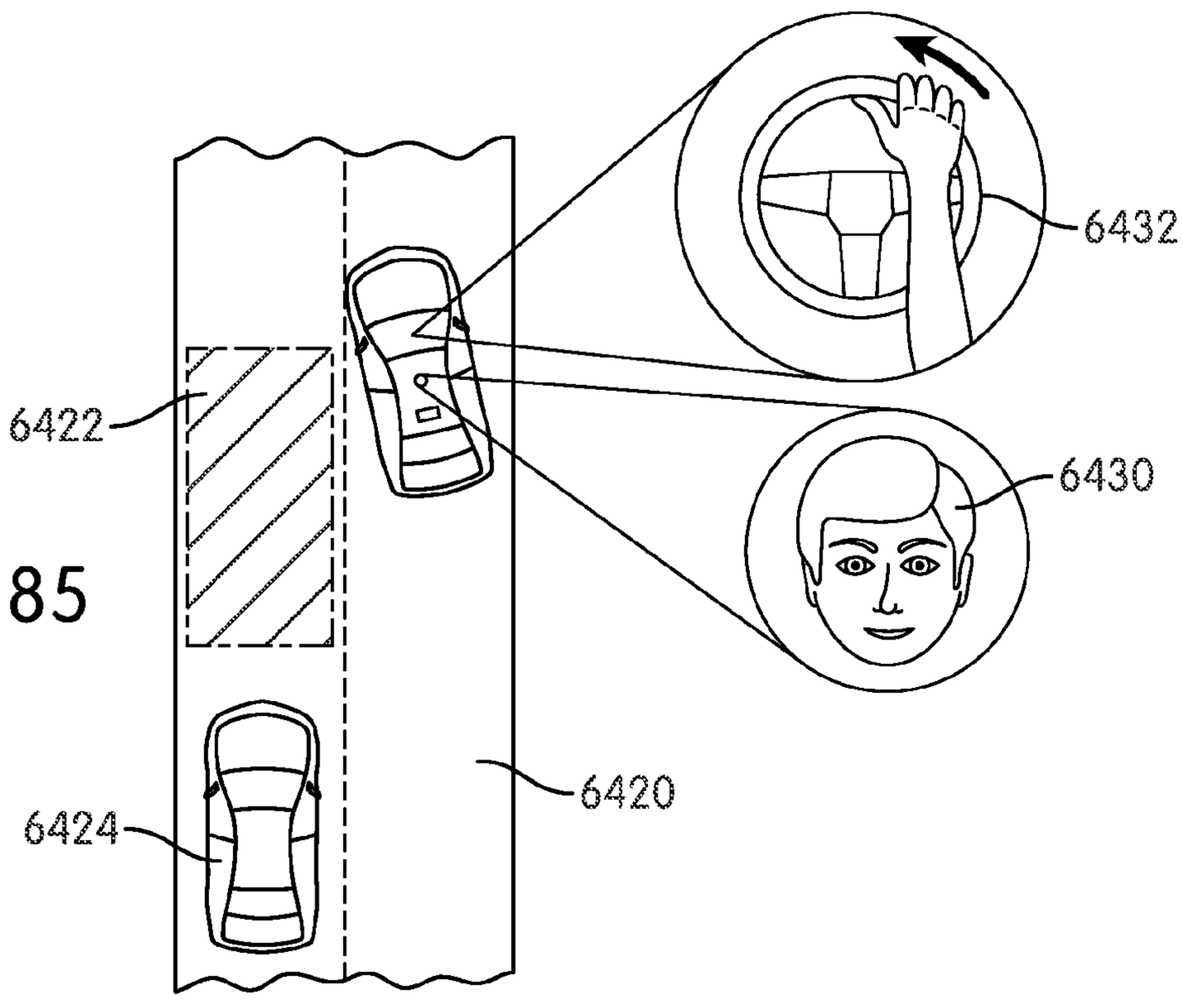

FIG. 85

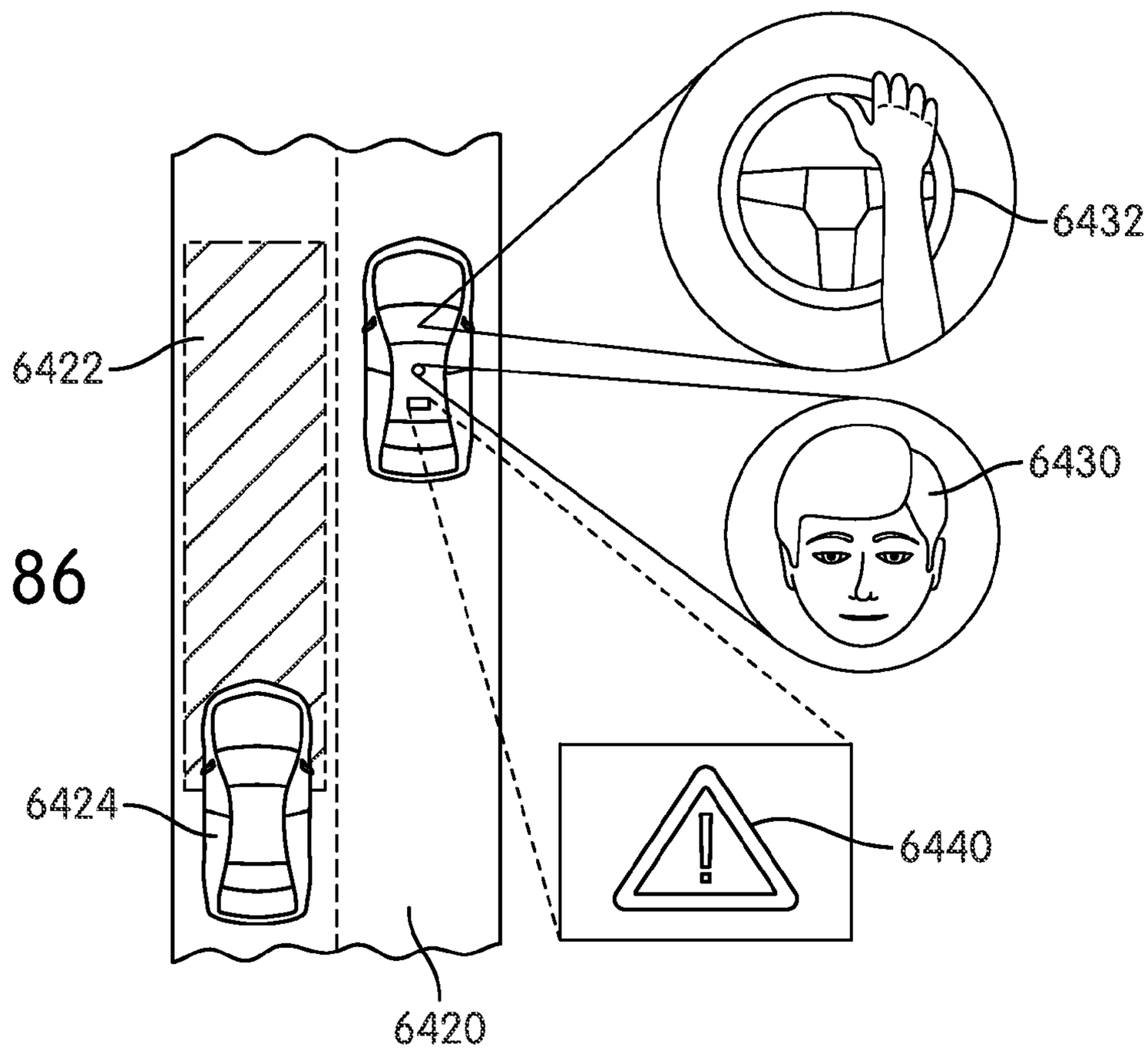

FIG. 86

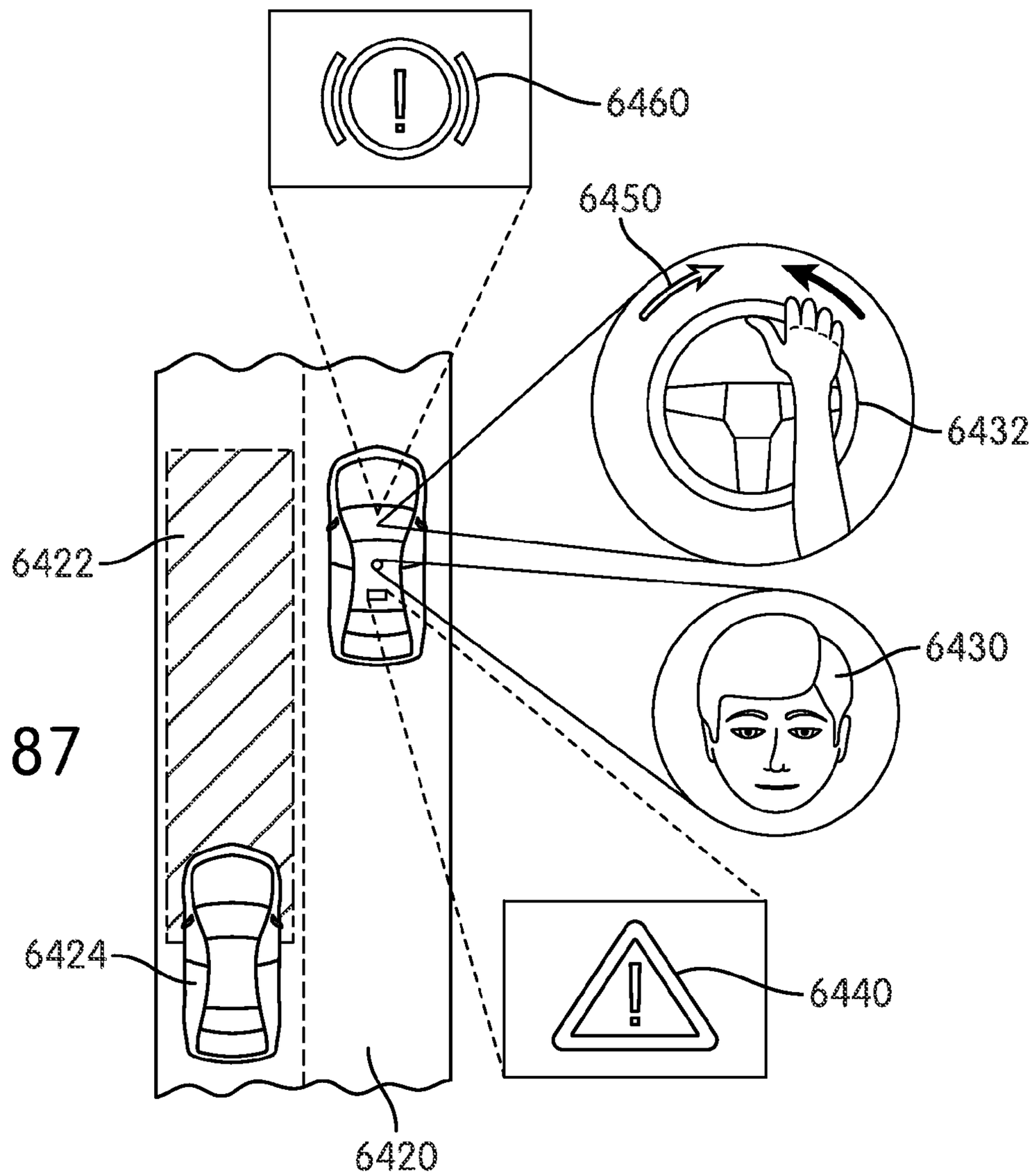

FIG. 87

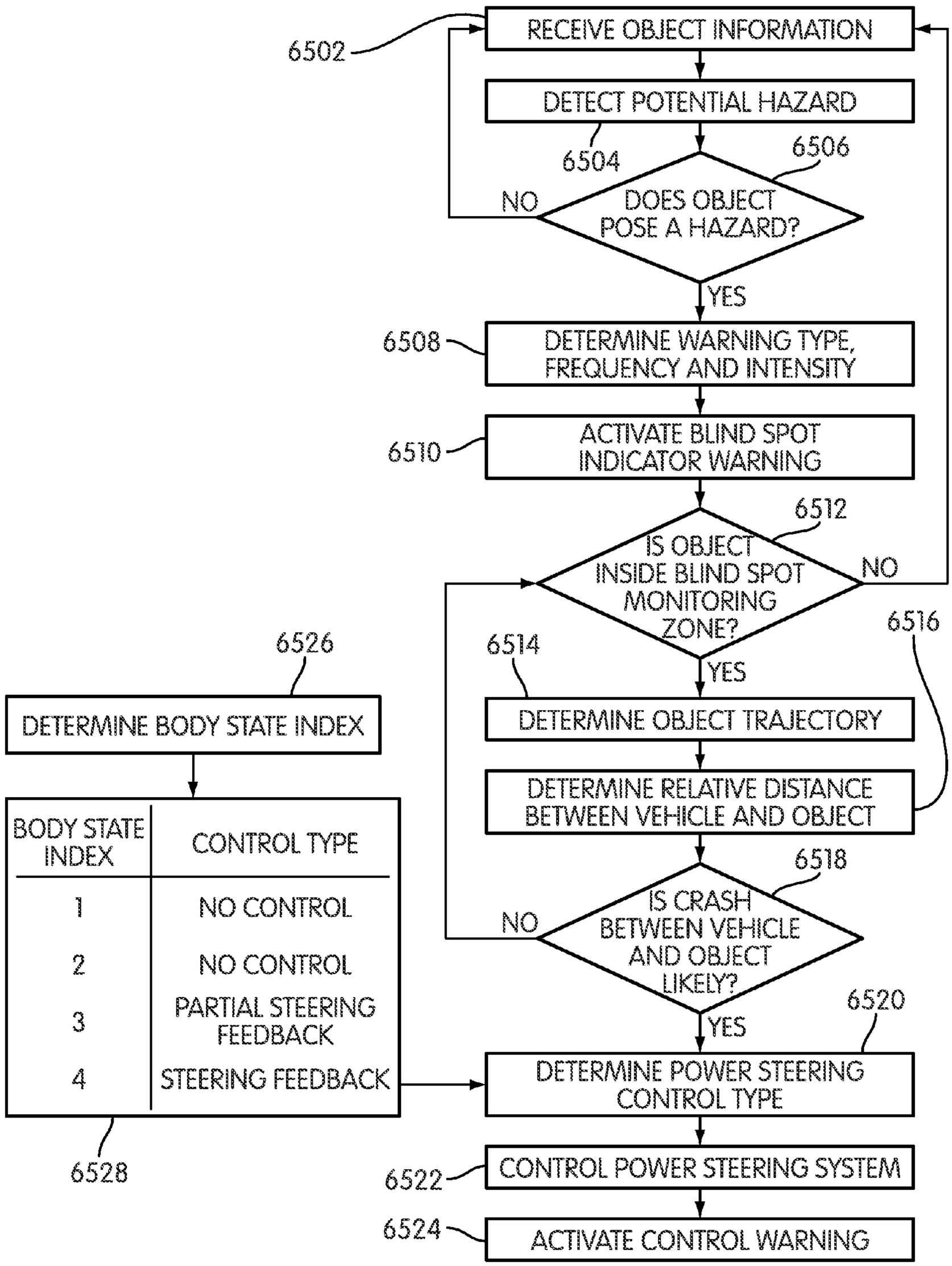
6502
RECEIVE OBJECT INFORMATION
DETECT POTENTIAL HAZARD
6504
6506
NO
DOES OBJECT POSE A HAZARD?
YES
6508
DETERMINE WARNING TYPE, FREQUENCY AND INTENSITY
6510
ACTIVATE BLIND SPOT INDICATOR WARNING
6512
IS OBJECT INSIDE BLIND SPOT MONITORING ZONE?
NO
6516
6514
YES
DETERMINE OBJECT TRAJECTORY
DETERMINE RELATIVE DISTANCE BETWEEN VEHICLE AND OBJECT
6518
NO
IS CRASH BETWEEN VEHICLE AND OBJECT LIKELY?
YES
6520
DETERMINE POWER STEERING CONTROL TYPE
6522
CONTROL POWER STEERING SYSTEM
6524
ACTIVATE CONTROL WARNING
6526
DETERMINE BODY STATE INDEX
BODY STATE INDEX
CONTROL TYPE
1
NO CONTROL
2
NO CONTROL
3
PARTIAL STEERING FEEDBACK
4
STEERING FEEDBACK
6528

FIG. 88

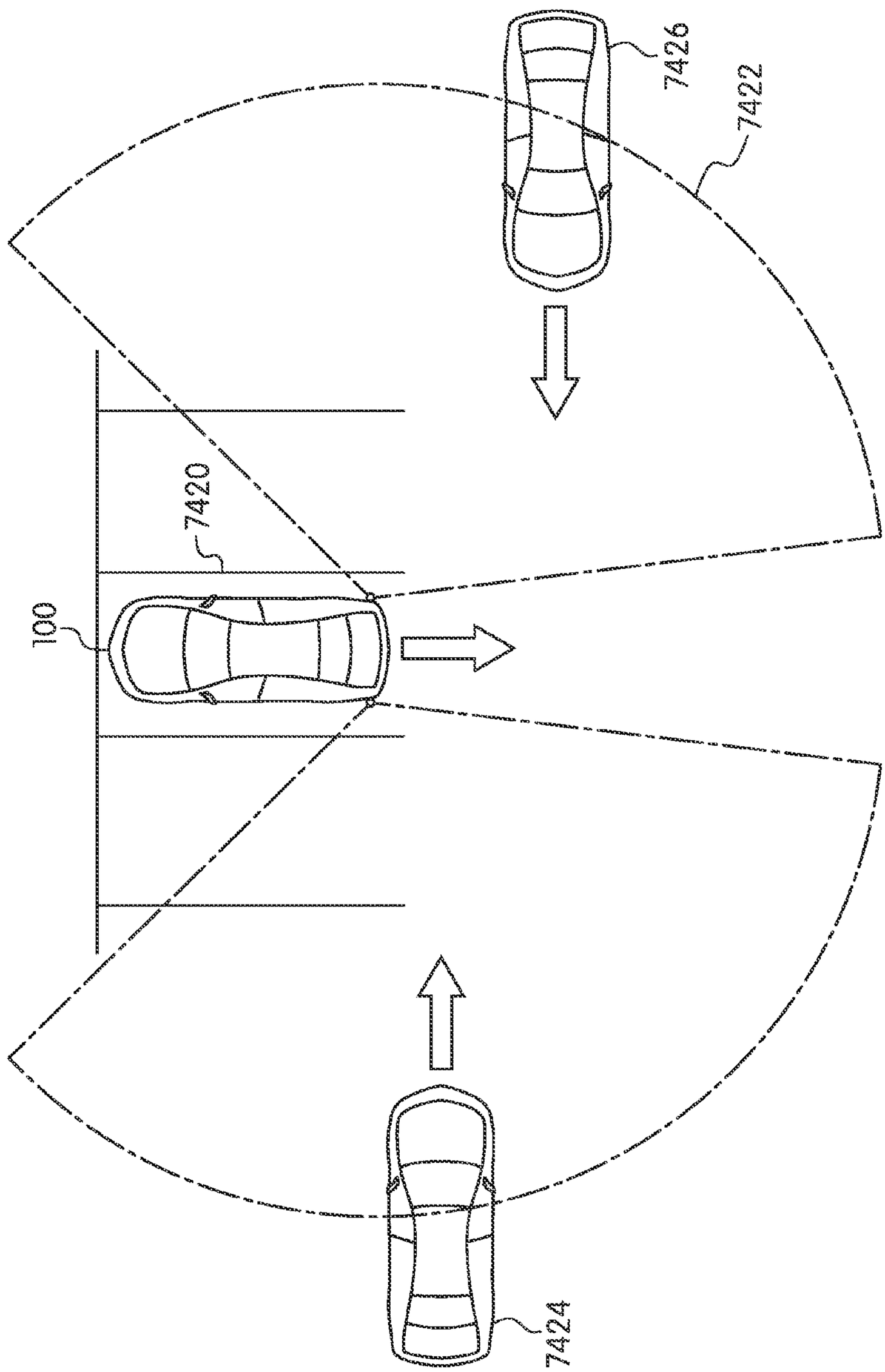

FIG. 89

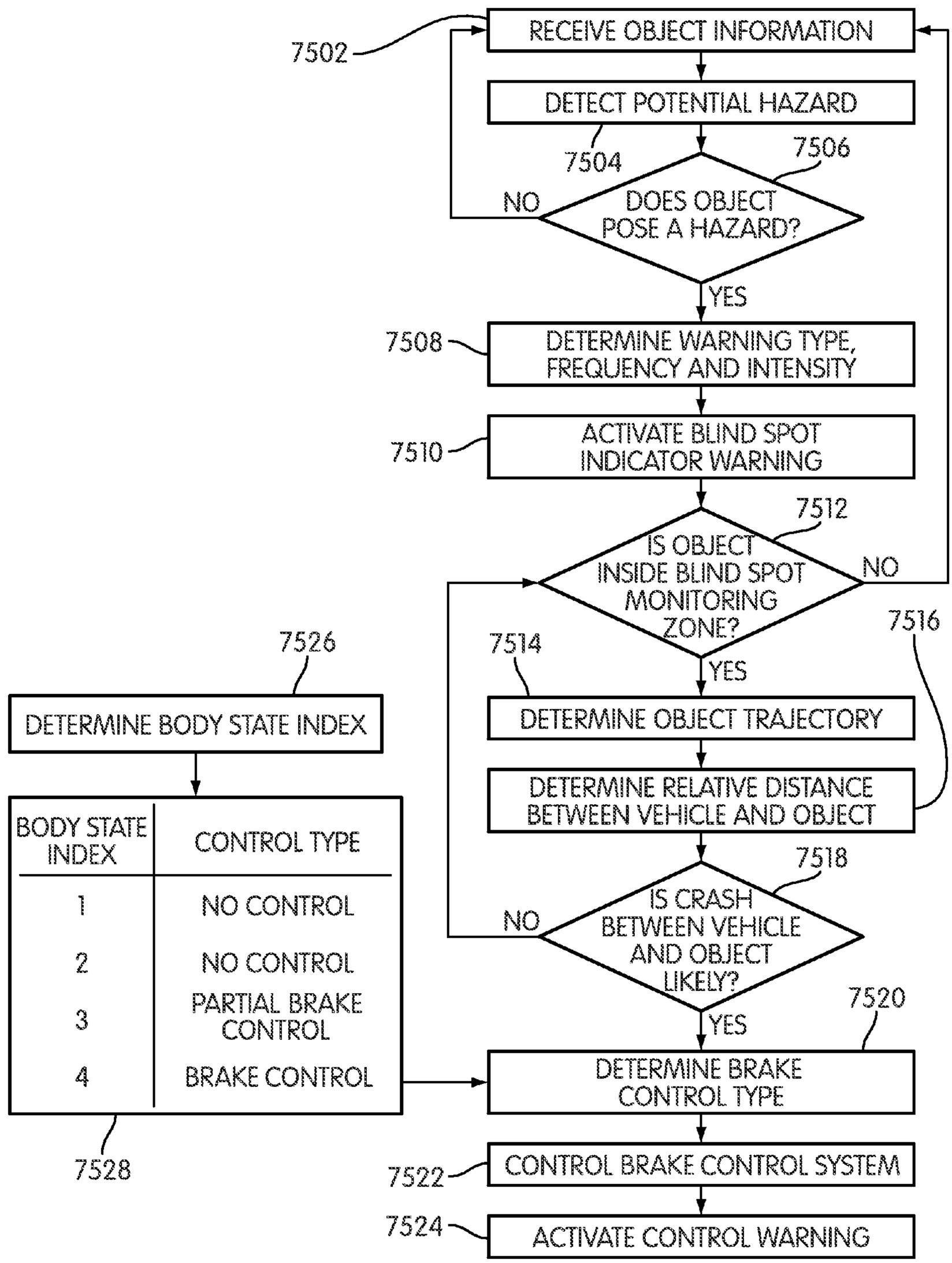
7502
RECEIVE OBJECT INFORMATION
DETECT POTENTIAL HAZARD
7504
7506
NO
DOES OBJECT POSE A HAZARD?
YES
7508
DETERMINE WARNING TYPE, FREQUENCY AND INTENSITY
7510
ACTIVATE BLIND SPOT INDICATOR WARNING
7512
IS OBJECT INSIDE BLIND SPOT MONITORING ZONE?
NO
7516
7514
YES
DETERMINE OBJECT TRAJECTORY
DETERMINE RELATIVE DISTANCE BETWEEN VEHICLE AND OBJECT
7518
IS CRASH BETWEEN VEHICLE AND OBJECT LIKELY?
NO
YES
7520
DETERMINE BRAKE CONTROL TYPE
7522
CONTROL BRAKE CONTROL SYSTEM
7524
ACTIVATE CONTROL WARNING
7526
DETERMINE BODY STATE INDEX
BODY STATE INDEX
CONTROL TYPE
1
NO CONTROL
2
NO CONTROL
3
PARTIAL BRAKE CONTROL
4
BRAKE CONTROL
7528

FIG. 90

COORDINATED VEHICLE RESPONSE SYSTEM AND METHOD FOR DRIVER BEHAVIOR

This application is a continuation-in-part of U.S. application Ser. No. 13/030,637 filed on Feb. 18, 2011, which is expressly incorporated herein by reference.

BACKGROUND

The current embodiment relates to motor vehicles and in particular to a system and method for responding to driver behavior.

Motor vehicles are operated by drivers in various conditions. Lack of sleep, monotonous road conditions, use of items, or health-related conditions can increase the likelihood that a driver may become drowsy or inattentive while driving. Drowsy or inattentive drivers may have delayed reaction times.

SUMMARY

In one aspect, a method of controlling vehicle systems in a motor vehicle includes receiving information from a first vehicle system, determining a level of drowsiness and detecting a hazard. The method also includes modifying the control of the first vehicle system using at least the level of drowsiness, selecting a second vehicle system that is different from the first vehicle system and modifying the control of the second vehicle system using at least the level of drowsiness.

In another aspect, a method of controlling vehicle systems in a motor vehicle includes operating a first vehicle system, where the operation of the first vehicle system includes determining a level of drowsiness associated with a driver of the motor vehicle, modifying the control of the first vehicle system, and submitting information related to the hazard to a second vehicle system. The method also includes operating a second vehicle system, where the operation of the second vehicle system includes determining the level of drowsiness, receiving the information related to the hazard, checking for the hazard and modifying the control of the second vehicle system.

In another aspect, a motor vehicle includes a first vehicle system and a second vehicle system in communication with the first vehicle system. The first vehicle system is capable of detecting at least one hazard and the first vehicle system is configured to determine a level of drowsiness for a driver. The second vehicle system is capable of detecting at least one hazard and the second vehicle system is configured to determine the level of drowsiness for the driver. The operation of the first vehicle system can be modified according to the level of drowsiness and the operation of the second vehicle system can also be modified to the level of drowsiness. The second vehicle system is configured to check for at least one hazard when the first vehicle system detects at least one hazard.

Other systems, methods, features and advantages will be, or will become, apparent to one of ordinary skill in the art upon examination of the following figures and detailed description. It is intended that all such additional systems, methods, features and advantages be included within this description and this summary, be within the scope of the embodiments, and be protected by the following claims.

BRIEF DESCRIPTION OF THE DRAWINGS

The embodiments can be better understood with reference to the following drawings and detailed description. The components in the figures are not necessarily to scale, emphasis instead being placed upon illustrating the principles of the embodiments. Moreover, in the figures, like reference numerals designate corresponding parts throughout the different views.

FIG. **1** is a schematic view of an embodiment of various components and systems for a motor vehicle;

FIG. **2** is a schematic view of an embodiment of various different vehicle systems;

FIG. **3** is a schematic view of an embodiment of various different autonomic monitoring systems;

FIG. **4** is an embodiment of a process of controlling vehicle systems according to driver behavior;

FIG. **5** is a table showing the impact of a response system on various vehicle systems;

FIG. **6** is an embodiment of a process of determining a level of drowsiness and operating one or more vehicle systems;

FIG. **7** is an embodiment of a process for operating a vehicle system using a control parameter;

FIG. **8** is an embodiment of a relationship between body state index and a control coefficient;

FIG. **9** is an embodiment of a calculation unit for determining a control parameter;

FIG. **10** is an embodiment of a relationship between body state index and a vehicle system status;

FIG. **11** is a schematic view of an embodiment of a method of monitoring the eye movement of a driver to help determine if a driver is drowsy;

FIG. **12** is an embodiment of a process of monitoring eye movement of a driver to determine if the driver is drowsy;

FIG. **13** is a schematic view of an embodiment of a method of monitoring the head movement of a driver to determine if the driver is drowsy;

FIG. **14** is an embodiment of a process of monitoring the head movement of a driver to determine if the driver is drowsy;

FIG. **15** is a schematic view of an embodiment of a method of monitoring the distance between the driver's head and a headrest to determine if the driver is drowsy;

FIG. **16** is an embodiment of a process of monitoring the distance between the driver's head and a headrest to determine if the driver is drowsy;

FIG. **17** is a schematic view of an embodiment of a method of monitoring steering information to determine if a driver is drowsy;

FIG. **18** is an embodiment of a process of monitoring steering information to determine if a driver is drowsy;

FIG. **19** is a schematic view of an embodiment of a method of monitoring lane departure information to determine if a driver is drowsy;

FIG. **20** is an embodiment of a process of monitoring lane departure information to determine if a driver is drowsy;

FIG. **21** is a schematic view of an embodiment of a method of monitoring autonomic nervous system information to determine if a driver is drowsy;

FIG. **22** is an embodiment of a process of monitoring autonomic nervous system information to determine if a driver is drowsy;

FIG. **23** is a schematic view of an embodiment of a method of modifying the operation of a power steering system when a driver is drowsy;

FIG. **24** is a schematic view of an embodiment of a method of modifying the operation of a power steering system when a driver is drowsy;

FIG. **25** is an embodiment of a process of controlling a power steering system when a driver is drowsy;

FIG. **26** is an embodiment of a detailed process for controlling power steering assistance in response to driver behavior;

FIG. **27** is a schematic view of an embodiment of a method of modifying the operation of a climate control system when a driver is drowsy;

FIG. **28** is a schematic view of an embodiment of a method of modifying the operation of a climate control system when a driver is drowsy;

FIG. **29** is an embodiment of a process of controlling a climate control system when a driver is drowsy;

FIG. **30** is a schematic view of an embodiment of various provisions that can be used to wake a drowsy driver;

FIG. **31** is a schematic view of an embodiment of a method of waking up a drowsy driver using tactile devices, visual devices and audio devices;

FIG. **32** is an embodiment of a process for waking up a drowsy driver using tactile devices, visual devices and audio devices;

FIG. **33** is a schematic view of an electronic pretensioning system for a motor vehicle;

FIG. **34** is a schematic view of a method of waking up a driver using the electronic pretensioning system of FIG. **31**;

FIG. **35** is an embodiment of a process of controlling an electronic pretensioning system according to driver behavior;

FIG. **36** is a schematic view of an embodiment of a method of operating an antilock braking system when a driver is fully awake;

FIG. **37** is a schematic view of an embodiment of a method of modifying the operation of the antilock braking system of FIG. **34** when the driver is drowsy;

FIG. **38** is an embodiment of a process of modifying the operation of an antilock braking system according to driver behavior;

FIG. **39** is an embodiment of a process of modifying the operation of a brake system according to driver behavior;

FIG. **40** is an embodiment of a process of modifying the operation of a brake assist system according to driver behavior;

FIG. **41** is an embodiment of a process for controlling brake assist according to driver behavior;

FIG. **42** is an embodiment of a process for determining an activation coefficient for brake assist;

FIG. **43** is a schematic view of an embodiment of a motor vehicle operating with an electronic stability control system;

FIG. **44** is a schematic view of an embodiment of a method of modifying the operation of the electronic control assist system of FIG. **41** when the driver is drowsy;

FIG. **45** is an embodiment of a process of modifying the operation of an electronic stability control system according to driver behavior;

FIG. **46** is an embodiment of a process for controlling an electronic stability control system in response to driver behavior;

FIG. **47** is an embodiment of a process for setting an activation threshold for an electronic stability control system;

FIG. **48** is a schematic view of an embodiment of a motor vehicle equipped with a collision warning system;

FIG. **49** is an embodiment of a process of modifying the control of a collision warning system according to driver behavior;

FIG. **50** is an embodiment of a detailed process of modifying the control of a collision warning system according to driver behavior;

FIG. **51** is a schematic view of an embodiment of a motor vehicle operating with an auto cruise control system;

FIG. **52** is a schematic view of an embodiment of a method of modifying the control of the auto cruise control system of FIG. **51** according to driver behavior;

FIG. **53** is an embodiment of a process of modifying the control of an auto cruise control system according to driver behavior;

FIG. **54** is an embodiment of a process of modifying operation of an automatic cruise control system in response to driver behavior;

FIG. **55** is an embodiment of a process of modifying a cruising speed of a vehicle according to driver behavior;

FIG. **56** is an embodiment of a process for controlling a low speed follow function associated with cruise control;

FIG. **57** is a schematic view of an embodiment of a motor vehicle operating with a lane departure warning system;

FIG. **58** is a schematic view of an embodiment of a method of modifying the control of the lane departure warning system of FIG. **57** when the driver is drowsy;

FIG. **59** is an embodiment of a process of modifying the control of a lane departure warning system according to driver behavior;

FIG. **60** is an embodiment of a process of modifying the operation of a lane departure warning system in response to driver behavior;

FIG. **61** is an embodiment of a process for setting a road crossing threshold;

FIG. **62** is an embodiment of a process of modifying the operation of a lane keep assist system in response to driver behavior;

FIG. **63** is a schematic view of an embodiment in which a blind spot indicator system is active;

FIG. **64** is a schematic view of an embodiment in which a blind spot indicator system is active and a blind spot monitoring zone is increased in response to driver behavior;

FIG. **65** is an embodiment of a process of modifying the control of a blind spot indicator system;

FIG. **66** is an embodiment of a process for controlling a blind spot indicator system is response to driver behavior;

FIG. **67** is an embodiment of a process for determining a zone threshold for a blind spot indicator system;

FIG. **68** is an embodiment of a chart for selecting warning type according to body state index;

FIG. **69** is a schematic view of an embodiment of a collision mitigation braking system in which no warning is provided when the driver is alert;

FIG. **70** is a schematic view of an embodiment of a collision mitigation braking system in which a warning is provided when the driver is drowsy;

FIG. **71** is a schematic view of an embodiment of a collision mitigation braking system in which no automatic seatbelt pretensioning is provided when the driver is alert;

FIG. **72** is a schematic view of an embodiment of a collision mitigation braking system in which automatic seatbelt pretensioning is provided when the driver is drowsy;

FIG. **73** is an embodiment of a process for controlling a collision mitigation braking system in response to driver behavior;

FIG. **74** is an embodiment of a process for setting time to collision thresholds;

FIG. **75** is an embodiment of a process for operating a collision mitigation braking system during a first warning stage;

FIG. **76** is an embodiment of a process for operating a collision mitigation braking system during a second warning stage;

FIG. **77** is an embodiment of a process for operating a navigation system according to driver monitoring;

FIG. **78** is a schematic view of an embodiment of a response system including a central ECU;

FIG. **79** is an embodiment of a process for modifying the operation of one or more vehicle systems;

FIG. **80** is an embodiment of a process for controlling selected vehicle systems in response to driver behavior;

FIG. **81** is an embodiment of a process for determining a risk level associated with a potential hazard;

FIG. **82** is schematic view of an embodiment of a first vehicle system and a second vehicle system communicating through a network;

FIG. **83** is an embodiment of a process for modifying the control of two vehicle systems;

FIG. **84** is a schematic view of an embodiment of a motor vehicle configured with a blind spot indicator system;

FIG. **85** is a schematic view of an embodiment of a motor vehicle configured with a blind spot indicator system in which the vehicle is switching lanes;

FIG. **86** is a schematic view of an embodiment of a motor vehicle configured with a blind spot indicator system in which the size of a blind spot warning zone is increased as the driver becomes drowsy;

FIG. **87** is a schematic view of an embodiment of a motor vehicle configured with a blind spot indicator system and an electronic power steering system working in cooperation with the blind spot indicator system;

FIG. **88** is an embodiment of a process for controlling a blind spot indicator system in cooperation with an electronic power steering system;

FIG. **89** is a schematic view of an embodiment of a motor vehicle configured with a blind spot indicator system with cross-traffic alert and a brake control system working in cooperation with the blind spot indicator system; and

FIG. **90** is an embodiment of a process for controlling a blind spot indicator system in cooperation with a brake control system.

DETAILED DESCRIPTION

The following detailed description is intended to be exemplary and those of ordinary skill in the art will recognize that other embodiments and implementations are possible within the scope of the embodiments described herein. The exemplary embodiments are first described generally with respect to the components of a motor vehicle, vehicle systems and methods for assessing driver behavior and operational response. Presented after the general description are exemplary implementations of determining a driver behavior and operational response. Further, embodiments related to assessing driver behavior, operational response and intra-vehicle system communication are described. For organizational purposes, the description is structured into sections identified by headings, which are not intended to be limiting.

Referring now to the drawings, wherein the showings are for purposes of illustrating one or more exemplary embodiments and not for purposes of limiting the same, FIGS. **1-3** illustrate various environments, and systems in which one or more embodiments discussed herein can operate and/or include. With reference to FIG. **1**, a schematic view of an embodiment of various components for a motor vehicle **100** is illustrated. The term "motor vehicle" as used throughout this detailed description and in the claims refers to any moving vehicle that is capable of carrying one or more human occupants and is powered by any form of energy. The term "motor vehicle" includes, but is not limited to: cars, trucks, vans, minivans, SUVs, motorcycles, scooters, boats, personal watercraft, and aircraft.

In some cases, a motor vehicle includes one or more engines. The term "engine" as used throughout the specification and claims refers to any device or machine that is capable of converting energy. In some cases, potential energy is converted to kinetic energy. For example, energy conversion can include a situation where the chemical potential energy of a fuel or fuel cell is converted into rotational kinetic energy or where electrical potential energy is converted into rotational kinetic energy. Engines can also include provisions for converting kinetic energy into potential energy. For example, some engines include regenerative braking systems where kinetic energy from a drive train is converted into potential energy. Engines can also include devices that convert solar or nuclear energy into another form of energy. Some examples of engines include, but are not limited to: internal combustion engines, electric motors, solar energy converters, turbines, nuclear power plants, and hybrid systems that combine two or more different types of energy conversion processes.

For purposes of clarity, only some components of the motor vehicle **100** are shown in the current embodiment. Furthermore, it will be understood that in other embodiments some of the components may be optional. Additionally, it will be understood that in other embodiments, any other arrangements of the components illustrated here can be used for powering the motor vehicle **100**.

Generally, the motor vehicle **100** may be propelled by any power source. In some embodiments, the motor vehicle **100** may be configured as a hybrid vehicle that uses two or more power sources. In other embodiments, the motor vehicle **100** may use a single power source, such as an engine.

In one embodiment, the motor vehicle **100** can include an engine **102**. Generally, the number of cylinders in the engine **102** could vary. In some cases, the engine **102** could include six cylinders. In some cases, the engine **102** could be a three cylinder, four cylinder or eight cylinder engine. In still other cases, the engine **102** could have any other number of cylinders.

In some embodiments, the motor vehicle **100** may include provisions for communicating, and in some cases controlling, the various components associated with the engine **102** and/or other systems of the motor vehicle **100**. In some embodiments, the motor vehicle **100** may include a computer or similar device. In the current embodiment, the motor vehicle **100** may include an electronic control unit **150**, hereby referred to as the ECU **150**. In one embodiment, the ECU **150** may be configured to communicate with, and/or control, various components of the motor vehicle **100**.

The ECU **150** may include a microprocessor, RAM, ROM, and software all serving to monitor and supervise various parameters of the engine, as well as other components or systems of the motor vehicle **100**. For example, the ECU **150** is capable of receiving signals from numerous sensors, devices, and systems located in the engine. The output of various devices is sent to the ECU **150** where the device signals may be stored in an electronic storage, such as RAM. Both current and electronically stored signals may be processed by a central processing unit (CPU) in accordance with software stored in an electronic memory, such as ROM.

The ECU **150** may include a number of ports that facilitate the input and output of information and power. The term "port" as used throughout this detailed description and in the claims refers to any interface or shared boundary between two conductors. In some cases, ports can facilitate the insertion and removal of conductors. Examples of these types of ports include mechanical connectors. In other cases, ports are inter-

faces that generally do not provide easy insertion or removal. Examples of these types of ports include soldering or electron traces on circuit boards.

All of the following ports and provisions associated with the ECU **150** are optional. Some embodiments may include a given port or provision, while others may exclude it. The following description discloses many of the possible ports and provisions that can be used, however, it should be kept in mind that not every port or provision must be used or included in a given embodiment.

In some embodiments, the ECU **150** can include provisions for communicating and/or controlling various systems associated with the engine **102**. In one embodiment, the ECU **150** can include a port **151** for receiving various kinds of steering information. In some cases, the ECU **150** may communicate with an electronic power steering system **160**, also referred to as an EPS **160**, through the port **151**. The EPS **160** may comprise various components and devices utilized for providing steering assistance. In some cases, for example, the EPS **160** may include an assist motor as well as other provisions for providing steering assistance to a driver. In addition, the EPS **160** could be associated with various sensors including torque sensors, steering angle sensors as well as other kinds of sensors. Examples of electronic power steering systems are disclosed in Kobayashi, U.S. Pat. No. 7,497,471, filed Feb. 27, 2006 as well as Kobayashi, U.S. Pat. No. 7,497,299, filed Feb. 27, 2006, the entirety of both being hereby incorporated by reference.

In some embodiments, the ECU **150** can include provisions for receiving various kinds of optical information. In one embodiment, the ECU **150** can include a port **152** for receiving information from one or more optical sensing devices, such as an optical sensing device **162**. The optical sensing device **162** could be any kind of optical device including a digital camera, video camera, infrared sensor, laser sensor, as well as any other device capable of detecting optical information. In one embodiment, the optical sensing device **162** could be a video camera. In addition, in some cases, the ECU **150** could include a port **159** for communicating with a thermal sensing device **163**. The thermal sensing device **163** may be configured to detect thermal information. In some cases, the thermal sensing device **163** and the optical sensing device **162** could be combined into a single sensor.

Generally, one or more optical sensing devices and/or thermal sensing devices could be associated with any portion of a motor vehicle. In some cases, an optical sensing device could be mounted to the roof of a vehicle cabin. In other cases, an optical sensing device could be mounted in a vehicle dashboard. Moreover, in some cases, multiple optical sensing devices could be installed inside a motor vehicle to provide viewpoints of a driver or occupant from multiple different angles. In one embodiment, the optical sensing device **162** may be installed in a portion of the motor vehicle **100** so that the optical sensing device **162** can capture images of the face and/or head of a driver or occupant. Similarly, the thermal sensing device **163** could be located in any portion of the motor vehicle **100** including a dashboard, roof or in any other portion. The thermal sensing device **163** may also be located so as to provide a view of the face and/or head of a driver.

In some embodiments, the ECU **150** can include provisions for receiving information about the location of a driver's head. In one embodiment, the ECU **150** can include a port **135** for receiving information related to the distance between a driver's head and a headrest **137**. In some cases, this information can be received from a proximity sensor **134**. The proximity sensor **134** could be any type of sensor configured to detect the distance between the driver's head and the headrest **137**. In some cases, the proximity sensor **134** could be a capacitor. In other cases, the proximity sensor **134** could be a laser sensing device. In still other cases, any other types of proximity sensors known in the art could be used for the proximity sensor **134**. Moreover, in other embodiments, the proximity sensor **134** could be used to detect the distance between any part of the driver and any portion of the motor vehicle **100** including, but not limited to: a headrest, a seat, a steering wheel, a roof or ceiling, a driver side door, a dashboard, a central console as well as any other portion of the motor vehicle **100**.

In some embodiments, the ECU **150** can include provisions for receiving information about the biological state of a driver. For example, the ECU **150** could receive information related to the autonomic nervous system (or visceral nervous system) of a driver. In one embodiment, the ECU **150** may include a port **153** for receiving information about the state of a driver from a bio-monitoring sensor **164**. Examples of different information about a driver that could be received from the bio-monitoring sensor **164** include, but are not limited to: heart information, such as, heart rate, blood pressure, blood flow, oxygen content, etc., brain information, such as, electroencephalogram (EEG) measurements, functional near infrared spectroscopy (fNIRS), functional magnetic resonance imaging (fMRI), etc, digestion information, respiration rate information, salivation information, perspiration information, pupil dilation information, as well as other kinds of information related to the autonomic nervous system or other biological systems of the driver.

Generally, a bio-monitoring sensor could be disposed in any portion of a motor vehicle. In some cases, a bio-monitoring sensor could be disposed in a location proximate to a driver. For example, in one embodiment, the bio-monitoring sensor **164** could be located within or on the surface of a driver seat **190**. In other embodiments, however, the bio-monitoring sensor **164** could be located in any other portion of the motor vehicle **100**, including, but not limited to: a steering wheel, a headrest, an armrest, dashboard, rear-view mirror as well as any other location. Moreover, in some cases, the bio-monitoring sensor **164** may be a portable sensor that is worn by a driver, associated with a portable device located in proximity to the driver, such as a smart phone or similar device or associated with an article of clothing worn by the driver.

In some embodiments, the ECU **150** can include provisions for communicating with and/or controlling various visual devices. Visual devices include any devices that are capable of displaying information in a visual manner. These devices can include lights (such as dashboard lights, cabin lights, etc.), visual indicators, video screens (such as a navigation screen or touch screen), as well as any other visual devices. In one embodiment, the ECU **150** includes a port **154** for communicating with visual devices **166**.

In some embodiments, the ECU **150** can include provisions for communicating with and/or controlling various audio devices. Audio devices include any devices that are capable of providing information in an audible manner. These devices can include speakers as well as any of the systems associated with speakers such as radios, DVD players, CD players, cassette players, MP3 players, navigation systems as well as any other systems that provide audio information. In one embodiment, the ECU **150** can include a port **155** for communicating with audio devices **168**. Moreover, the audio devices **168** could be speakers in some cases, while in other cases the audio devices **168** could include any systems that are capable of providing audio information to speakers that can be heard by a driver.

In some embodiments, the ECU **150** can include provisions for communicating with and/or controlling various tactile devices. The term "tactile device" as used throughout this detailed description and in the claims refers to any device that is capable of delivering tactile stimulation to a driver or occupant. For example, a tactile device can include any device that vibrates or otherwise moves in a manner that can be sensed by a driver. Tactile devices could be disposed in any portion of a vehicle. In some cases, a tactile device could be located in a steering wheel to provide tactile feedback to a driver. In other cases, a tactile device could be located in a vehicle seat, to provide tactile feedback or to help relax a driver. In one embodiment, ECU the **150** can include a port **156** for communicating and/or controlling visual devices **170**.

In some embodiments, the ECU **150** may include provisions for receiving input from a user. For example, in some embodiments, the ECU **150** can include a port **158** for receiving information from a user input device **111**. In some cases, the user input device **111** could comprise one or more buttons, switches, a touch screen, touch pad, dial, pointer or any other type of input device. For example, in one embodiment, the input device **111** could be a keyboard or keypad. In another embodiment, the input device **111** could be a touch screen. In one embodiment, the input device **111** could be an ON/OFF switch. In some cases, the input device **111** could be used to turn on or off any body state monitoring devices associated with the vehicle or driver. For example, in an embodiment where an optical sensor is used to detect body state information, the input device **111** could be used to switch this type of monitoring on or off. In embodiments using multiple monitoring devices, the input device **111** could be used to simultaneously turn on or off all the different types of monitoring associated with these monitoring devices. In other embodiments, the input device **111** could be used to selectively turn on or off some monitoring devices but not others.

In some embodiments, the ECU **150** may include ports for communicating with and/or controlling various different engine components or systems. Examples of different engine components or systems include, but are not limited to: fuel injectors, spark plugs, electronically controlled valves, a throttle, as well as other systems or components utilized for the operation of the engine **102**.

It will be understood that only some components of the motor vehicle **100** are shown in the current embodiment. In other embodiments, additional components could be included, while some of the components shown here could be optional. Moreover, the ECU **150** could include additional ports for communicating with various other systems, sensors or components of the motor vehicle **100**. As an example, in some cases, the ECU **150** could be in electrical communication with various sensors for detecting various operating parameters of the motor vehicle **100**, including but not limited to: vehicle speed, vehicle location, yaw rate, lateral g forces, fuel level, fuel composition, various diagnostic parameters as well as any other vehicle operating parameters and/or environmental parameters (such as ambient temperature, pressure, elevation, etc.).

In some embodiments, the ECU **150** can include provisions for communicating with and/or controlling various different vehicle systems. Vehicle systems include any automatic or manual systems that may be used to enhance the driving experience and/or enhance safety. In one embodiment, the ECU **150** can include a port **157** for communicating with and/or controlling vehicle systems **172**. For purposes of illustration, a single port is shown in the current embodiment for communicating with the vehicle systems **172**. However, it will be understood that in some embodiments, more than one port can be used. For example, in some cases, a separate port may be used for communicating with each separate vehicle system of the vehicle systems **172**. Moreover, in embodiments where the ECU **150** comprises part of the vehicle system, the ECU **150** can include additional ports for communicating with and/or controlling various different components or devices of a vehicle system.

Examples of different vehicle systems **172** are illustrated in FIG. **2**. It should be understood that the systems shown in FIG. **2** are only intended to be exemplary and in some cases some other additional systems may be included. In other cases, some of the systems may be optional and not included in all embodiments.

The motor vehicle **100** can include an electronic stability control system **222** (also referred to as ESC system **222**). The ESC system **222** can include provisions for maintaining the stability of the motor vehicle **100**. In some cases, the ESC system **222** may monitor the yaw rate and/or lateral g acceleration of the motor vehicle **100** to help improve traction and stability. The ESC system **222** may actuate one or more brakes automatically to help improve traction. An example of an electronic stability control system is disclosed in Ellis et al., U.S. Pat. No. 8,423,257, now U.S. patent application Ser. No. 12/725,587, filed Mar. 17, 2010, the entirety of which is hereby incorporated by reference. In one embodiment, the electronic stability control system may be a vehicle stability system.

In some embodiments, the motor vehicle **100** can include an antilock brake system **224** (also referred to as an ABS system **224**). The ABS system **224** can include various different components such as a speed sensor, a pump for applying pressure to the brake lines, valves for removing pressure from the brake lines, and a controller. In some cases, a dedicated ABS controller may be used. In other cases, Ser. No. 12/725,587 ECU **150** can function as an ABS controller. Examples of antilock braking systems are known in the art. One example is disclosed in Ingaki, et al., U.S. Pat. No. 6,908,161, filed Nov. 18, 2003, the entirety of which is hereby incorporated by reference. Using the ABS system **224** may help improve traction in the motor vehicle **100** by preventing the wheels from locking up during braking.

The motor vehicle **100** can include a brake assist system **226**. The brake assist system **226** may be any system that helps to reduce the force required by a driver to depress a brake pedal. In some cases, the brake assist system **226** may be activated for older drivers or any other drivers who may need assistance with braking. An example of a brake assist system can be found in Wakabayashi et al., U.S. Pat. No. 6,309,029, filed Nov. 17, 1999, the entirety of which is hereby incorporated by reference.

In some embodiments, the motor vehicle **100** can include an automatic brake prefill system **228** (also referred to as an ABP system **228**). The ABP system **228** includes provisions for prefilling one or more brake lines with brake fluid prior to a collision. This may help increase the reaction time of the braking system as the driver depresses the brake pedal. Examples of automatic brake prefill systems are known in the art. One example is disclosed in Bitz, U.S. Pat. No. 7,806,486, filed May 24, 2007, the entirety of which is hereby incorporated by reference.

In some embodiments, the motor vehicle **100** can include a low speed follow system **230** (also referred to as an LSF system **230**). The LSF system **230** includes provisions for automatically following a preceding vehicle at a set distance or range of distances. This may reduce the need for the driver to constantly press and depress the acceleration pedal in slow traffic situations. The LSF system **230** may include compo-

nents for monitoring the relative position of a preceding vehicle (for example, using remote sensing devices such as lidar or radar). In some cases, the LSF system **230** may include provisions for communicating with any preceding vehicles for determining the GPS positions and/or speeds of the vehicles. Examples of low speed follow systems are known in the art. One example is disclosed in Arai, U.S. Pat. No. 7,337,056, filed Mar. 23, 2005, the entirety of which is hereby incorporated by reference. Another example is disclosed in Higashimata et al., U.S. Pat. No. 6,292,737, filed May 19, 2000, the entirety of which is hereby disclosed by reference.

The motor vehicle **100** can include a cruise control system **232**. Cruise control systems are well known in the art and allow a user to set a cruising speed that is automatically maintained by a vehicle control system. For example, while traveling on a highway, a driver may set the cruising speed to 55 mph. The cruise control system **232** may maintain the vehicle speed at approximately 55 mph automatically, until the driver depresses the brake pedal or otherwise deactivates the cruising function.

The motor vehicle **100** can include a collision warning system **234**. In some cases, the collision warning system **234** may include provisions for warning a driver of any potential collision threats with one or more vehicles. For example, a collision warning system can warn a driver when another vehicle is passing through an intersection as the motor vehicle **100** approaches the same intersection. Examples of collision warning systems are disclosed in Mochizuki, U.S. Pat. No. 8,558,718 , now U.S. patent application Ser. No. 12/885,790, filed Sep. 20, 2010, and Mochizuki et al., U.S. Pat. No. 8,587,418 , now U.S. patent application Ser. No. 12/845,092, filed Jul. 28, 2010, the entirety of both being hereby incorporated by reference. In one embodiment, collision warning system **234** could be a forward collision warning system.

The motor vehicle **100** can include a collision mitigation braking system **236** (also referred to as a CMBS **236**). The CMBS **236** may include provisions for monitoring vehicle operating conditions (including target vehicles and objects in the environment of the vehicle) and automatically applying various stages of warning and/or control to mitigate collisions. For example, in some cases, the CMBS **236** may monitor forward vehicles using a radar or other type of remote sensing device. If the motor vehicle **100** gets too close to a forward vehicle, the CMBS **236** could enter a first warning stage. During the first warning stage, a visual and/or audible warning may be provided to warn the driver. If the motor vehicle **100** continues to get closer to the forward vehicle, the CMBS **236** could enter a second warning stage. During the second warning stage, the CMBS **236** could apply automatic seatbelt pretensioning. In some cases, visual and/or audible warnings could continue throughout the second warning stage. Moreover, in some cases, during the second stage automatic braking could also be activated to help reduce the vehicle speed. In some cases, a third stage of operation for thee CMBS **236** may involve braking the vehicle and tightening a seatbelt automatically in situations where a collision is very likely. An example of such a system is disclosed in Bond, et al., U.S. Pat. No. 6,607,255, and filed Jan. 17, 2002, the entirety of which is hereby incorporated by reference. The term collision mitigation braking system as used throughout this detailed description and in the claims refers to any system that is capable of sensing potential collision threats and providing various types of warning responses as well as automated braking in response to potential collisions.

The motor vehicle **100** can include an auto cruise control system **238** (also referred to as an ACC system **238**). In some cases, the ACC system **238** may include provisions for automatically controlling the vehicle to maintain a predetermined following distance behind a preceding vehicle or to prevent a vehicle from getting closer than a predetermined distance to a preceding vehicle. The ACC system **238** may include components for monitoring the relative position of a preceding vehicle (for example, using remote sensing devices such as lidar or radar). In some cases, the ACC system **238** may include provisions for communicating with any preceding vehicles for determining the GPS positions and/or speeds of the vehicles. An example of an auto cruise control system is disclosed in Arai et al., U.S. Pat. No. 7,280,903, filed Aug. 31, 2005, the entirety of which is hereby incorporated by reference.

The motor vehicle **100** can include a lane departure warning system **240** (also referred to as an LDW system **240**). The LDW system **240** may determine when a driver is deviating from a lane and provide a warning signal to alert the driver. Examples of lane departure warning systems can be found in Tanida et al., U.S. Pat. No. 8,063,754, filed Dec. 17, 2007, the entirety of which is hereby incorporated by reference.

The motor vehicle **100** can include a blind spot indicator system **242**. The blind spot indicator system **242** can include provisions for helping to monitor the blind spot of a driver. In some cases, the blind spot indicator system **242** can include provisions to warn a driver if a vehicle is located within a blind spot. Any known systems for detecting objects traveling around a vehicle can be used.

In some embodiments, the motor vehicle **100** can include a lane keep assist system **244**. The lane keep assist system **244** can include provisions for helping a driver to stay in the current lane. In some cases, the lane keep assist system **244** can warn a driver if the motor vehicle **100** is unintentionally drifting into another lane. Also, in some cases, the lane keep assist system **244** may provide assisting control to maintain a vehicle in a predetermined lane. An example of a lane keep assist system is disclosed in Nishikawa et al., U.S. Pat. No. 6,092,619, filed May 7, 1997, the entirety of which is hereby incorporated by reference.

In some embodiments, the motor vehicle **100** could include a navigation system **248**. The navigation system **248** could be any system capable of receiving, sending and/or processing navigation information. The term "navigation information" refers to any information that can be used to assist in determining a location or providing directions to a location. Some examples of navigation information include street addresses, street names, street or address numbers, apartment or suite numbers, intersection information, points of interest, parks, any political or geographical subdivision including town, township, province, prefecture, city, state, district, ZIP or postal code, and country. Navigation information can also include commercial information including business and restaurant names, commercial districts, shopping centers, and parking facilities. In some cases, the navigation system could be integrated into the motor vehicle. In other cases, the navigation system could be a portable or stand-alone navigation system.

The motor vehicle **100** can include a climate control system **250**. The climate control system **250** may be any type of system used for controlling the temperature or other ambient conditions in the motor vehicle **100**. In some cases, the climate control system **250** may comprise a heating, ventilation and air conditioning system as well as an electronic controller for operating the HVAC system. In some embodiments, the climate control system **250** can include a separate dedicated controller. In other embodiments, the ECU **150** may function

as a controller for the climate control system **250**. Any kind of climate control system known in the art may be used.

The motor vehicle **100** can include an electronic pretensioning system **254** (also referred to as an EPT system **254**). The EPT system **254** may be used with a seatbelt for a vehicle. The EPT system **254** can include provisions for automatically tightening, or tensioning, the seatbelt. In some cases, the EPT system **254** may automatically pretension the seatbelt prior to a collision. An example of an electronic pretensioning system is disclosed in Masuda et al., U.S. Pat. No. 6,164,700, filed Apr. 20, 1999, the entirety of which is hereby incorporated by reference.

Additionally, the vehicle systems **172** could incorporate an electronic power steering system **160**, visual devices **166**, audio devices **168** and tactile devices **170**, as well as any other kinds of devices, components or systems used with vehicles.

It will be understood that each of these vehicle systems may be standalone systems or may be integrated with the ECU **150**. For example, in some cases, the ECU **150** may operate as a controller for various components of one or more vehicle systems. In other cases, some systems may comprise separate dedicated controllers that communicate with the ECU **150** through one or more ports.

FIG. **3** illustrates an embodiment of various autonomic monitoring systems that could be associated with the motor vehicle **100**. These autonomic monitoring systems could include one or more bio-monitoring sensors **164**. For example, in some embodiments, the motor vehicle **100** could include a heart monitoring system **302**. The heart monitoring system **302** could include any devices or systems for monitoring the heart information of a driver. In some cases, the heart monitoring system **302** could include heart rate sensors **320**, blood pressure sensors **322** and oxygen content sensors **324** as well as any other kinds of sensors for detecting heart information and/or cardiovascular information. Moreover, sensors for detecting heart information could be disposed in any locations within the motor vehicle **100**. For example, the heart monitoring system **302** could include sensors disposed in a steering wheel, seat, armrest or other component that detect the heart information of a driver. The motor vehicle **100** could also include a respiratory monitoring system **304**. The respiratory monitoring system **304** could include any devices or systems for monitoring the respiratory function (e.g. breathing) of a driver. For example, the respiratory monitoring system **304** could include sensors disposed in a seat for detecting when a driver inhales and exhales. In some embodiments, the motor vehicle **100** could include a perspiration monitoring system **306**. The perspiration monitoring system **306** may include any devices or systems for sensing perspiration or sweat from a driver. In some embodiments, the motor vehicle **100** could include a pupil dilation monitoring system **308** for sensing the amount of pupil dilation, or pupil size, in a driver. In some cases, the pupil dilation monitoring system **308** could include one or more optical sensing devices.

Additionally, in some embodiments, the motor vehicle **100** may include a brain monitoring system **310** for monitoring various kinds of brain information. In some cases, the brain monitoring system **310** could include electroencephalogram (EEG) sensors **330**, functional near infrared spectroscopy (fNIRS) sensors **332**, functional magnetic resonance imaging (fMRI) sensors **334** as well as other kinds of sensors capable of detecting brain information. Such sensors could be located in any portion of the motor vehicle **100**. In some cases, sensors associated with the brain monitoring system **310** could be disposed in a headrest. In other cases, sensors could be disposed in the roof of the motor vehicle **100**. In still other cases, sensors could be disposed in any other locations.

In some embodiments, the motor vehicle **100** may include a digestion monitoring system **312**. In other embodiments, the motor vehicle **100** may include a salivation monitoring system **314**. In some cases, monitoring digestion and/or salivation could also help in determining if a driver is drowsy. Sensors for monitoring digestion information and/or salivation information can be disposed in any portion of a vehicle. In some cases, sensors could be disposed on a portable device used or worn by a driver.

It will be understood that each of the monitoring systems discussed above could be associated with one or more sensors or other devices. In some cases, the sensors could be disposed in one or more portions of the motor vehicle **100**. For example, the sensors could be integrated into a seat, door, dashboard, steering wheel, center console, roof or any other portion of the motor vehicle **100**. In other cases, however, the sensors could be portable sensors worn by a driver, integrated into a portable device carried by the driver or integrated into an article of clothing worn by the driver.

For purposes of convenience, various components, alone or in combination, discussed above and shown in FIGS. **1** through **3** may be referred to herein as a driver behavior response system **199**, also referred to simply as a the response system **199**. In some cases, the response system **199** comprises the ECU **150** as well as one or more sensors, components, devices or systems discussed above. In some cases, the response system **199** may receive input from various devices related to the behavior of a driver. In some cases, this information may be referred to as "monitoring information". In some cases, monitoring information could be received from a monitoring system, which may include any system configured to provide monitoring information such as optical devices, thermal devices, autonomic monitoring devices as well as any other kinds of devices, sensors or systems. In some cases, monitoring information could be received directly from a vehicle system, rather than from a system or component designed for monitoring driver behavior. In some cases, monitoring information could be received from both a monitoring system and a vehicle system. The response system **199** may use this information to modify the operation of one or more of the vehicle systems **172**. Moreover, it will be understood that in different embodiments, the response system **199** could be used to control any other components or systems utilized for operating the motor vehicle **100**.

In particular, the response system **199** can include provisions for determining if a driver is drowsy based on biological information, including information related to the autonomic nervous system of the driver. For example, a response system could detect a drowsy condition for a driver by analyzing heart information, breathing rate information, brain information, perspiration information as well as any other kinds of autonomic information.

Assessing Driver Behavior and Operational Response

A motor vehicle can include provisions for assessing the behavior of a driver and automatically adjusting the operation of one or more vehicle systems in response to the behavior. Throughout this specification, drowsiness will be used as the example behavior being assessed; however, it should be understood that any driver behavior could be assessed, including but not limited to drowsy behavior, distracted behavior, impaired behavior and/or generally inattentive behavior. The assessment and adjustment discussed below

may accommodate for the driver's slower reaction time, attention lapse and/or alertness. For example, in situations where a driver may be drowsy, the motor vehicle can include provisions for detecting that the driver is drowsy. Moreover, since drowsiness can increase the likelihood of hazardous driving situations, the motor vehicle can include provisions for modifying one or more vehicle systems automatically in order to mitigate against hazardous driving situations. In one embodiment, a driver behavior response system can receive information about the state of a driver and automatically adjust the operation of one or more vehicle systems.

The following detailed description discusses a variety of different methods for operating vehicle systems in response to driver behavior. In different embodiments, the various different steps of these processes may be accomplished by one or more different systems, devices or components. In some embodiments, some of the steps could be accomplished by a response system **199** of a motor vehicle. In some cases, some of the steps may be accomplished by an the ECU **150** of a motor vehicle. In other embodiments, some of the steps could be accomplished by other components of a motor vehicle, including but not limited to, the vehicle systems **172**. Moreover, for each process discussed below and illustrated in the Figures it will be understood that in some embodiments one or more of the steps could be optional.

FIG. **4** illustrates an embodiment of a process for controlling one or more vehicle systems in a motor vehicle depending on the state of the driver. In some embodiments, some of the following steps could be accomplished by a response system **199** of a motor vehicle. In some cases, some of the following steps may be accomplished by an ECU **150** of a motor vehicle. In other embodiments, some of the following steps could be accomplished by other components of a motor vehicle, such as vehicle systems **172**. In still other embodiments, some of the following steps could be accomplished by any combination of systems or components of the vehicle. It will be understood that in some embodiments one or more of the following steps may be optional. For purposes of reference, the following method discusses components shown in FIGS. **1** through **3**, including the response system **199**.

In step **402**, the response system **199** may receive monitoring information. In some cases, the monitoring information can be received from one or more sensors. In other cases, the monitoring information can be received from one or more autonomic monitoring systems. In still other cases, the monitoring information can be received from one or more vehicle systems. In still other cases, the monitoring information can be received from any other device of the motor vehicle **100**. In still other cases, the monitoring information can be received from any combination of sensors, monitoring systems, vehicles systems or other devices.

In step **404**, the response system **199** may determine the driver state. In some cases, the driver state may be normal or drowsy. In other cases, the driver state may range over three or more states ranging between normal and very drowsy (or even asleep). In this step, the response system **199** may use any information received during step **402**, including information from any kinds of sensors or systems. For example, in one embodiment, response system **199** may receive information from an optical sensing device that indicates the driver has closed his or her eyes for a substantial period of time. Other examples of determining the state of a driver are discussed in detail below.

In step **406**, the response system **199** may determine whether or not the driver is drowsy. If the driver is not drowsy, the response system **199** may proceed back to step **402** to receive additional monitoring information. If, however, the driver is drowsy, the response system **199** may proceed to step **408**. In step **408**, the response system **199** may automatically modify the control of one or more vehicle systems, including any of the vehicle systems discussed above. By automatically modifying the control of one or more vehicle systems, the response system **199** may help to avoid various hazardous situations that can be caused by a drowsy driver.

In some embodiments, a user may not want any vehicle systems modified or adjusted. In these cases, the user may switch an input device **111**, or a similar kind of input device, to the OFF position (see FIG. **1**). This could have the effect of turning off all body state monitoring and would further prevent the response system **199** from modifying the control of any vehicle systems. Moreover, the response system **199** could be reactivated at any time by switching input device **111** to the ON position (see FIG. **1**). In other embodiments, additional switches or buttons could be provided to turn on/off individual monitoring systems.

FIG. **5** is a table emphasizing the response system **199** impact on various vehicle systems due to changes in the driver's behavior, as well as the benefits to the driver for each change according to one embodiment. In particular, column **421** lists the various vehicle systems, which include many of the vehicle systems **172** discussed above and shown in FIG. **2**. Column **422** describes how response system **199** impacts the operation of each vehicle system when the driver's behavior is such that the driver may be distracted, drowsy, less attentive and/or impaired. Column **423** describes the benefits for the response system impacts described in column **422**. Column **424** describes the type of impact performed by response system **199** for each vehicle system. In particular, in column **424** the impact of response system **199** on each vehicle system is described as either "control" type or "warning" type. The control type indicates that the operation of a vehicle system is modified by the control system. The warning type indicates that the vehicle system is used to warn or otherwise alert a driver.

As indicated in FIG. **5**, upon detecting that a driver is drowsy or otherwise inattentive, the response system **199** may control the electronic stability control system **222**, the anti-lock brake system **224**, the brake assist system **226** and the brake pre-fill system **228** in a manner that compensates for the potentially slower reaction time of the driver. For example, in some cases, response system **199** may operate the electronic stability system **222** to improve steering precision and enhance stability. In some cases, response system **199** may operate the anti-lock brake system **224** so that the stopping distance is decreased. In some cases, response system **199** may control the brake assist system **226** so that an assisted braking force is applied sooner. In some cases, response system **199** may control the brake pre-fill system **228** so the brake lines are automatically pre-filled with brake fluid when a driver is drowsy. These actions may help to improve the steering precision and brake responsiveness when a driver is drowsy.

Additionally, upon detecting that a driver is drowsy or otherwise inattentive, the response system **199** may control the low speed follow system **230**, the cruise control system **232**, the collision warning system **234**, the collision mitigation braking system **236**, the auto cruise control system **238**, the lane departure warning system **240**, the blind spot indicator system **242** and the lane keep assist system **244** to provide protection due to the driver's lapse of attention. For example, the low speed follow system **230**, the cruise control system **232** and the lane keep assist system **244** could be disabled when the driver is drowsy to prevent unintended use of these systems. Likewise, the collision warning system **234**, the

collision mitigation braking system **236**, the lane departure warning system **240** and the blind spot indicator system **242** could warn a driver sooner about possible potential hazards. In some cases, the auto cruise control system **238** could be configured to increase the minimum gap distance between the motor vehicle **100** and the preceding vehicle.

In some embodiments, upon detecting that a driver is drowsy or otherwise inattentive, the response system **199** may control the electronic power steering system **160**, the visual devices **166**, the climate control system **250** (such as HVAC), the audio devices **168**, the electronic pretensioning system **254** for a seatbelt and the tactile devices **170** to supplement the driver's alertness. For example, the electronic power steering system **160** may be controlled to decrease power steering assistance. This requires the driver to apply more effort and can help improve awareness or alertness. The visual devices **166** and the audio devices **168** may be used to provide visual feedback and audible feedback, respectively. The tactile devices **170** and the electronic pretensioning system **254** can be used to provide tactile feedback to a driver. Also, the climate control system **250** may be used to change the cabin or driver temperature to effect the drowsiness of the driver. For example, by changing the cabin temperature the driver may be made more alert.

The various systems listed in FIG. **5** are only intended to be exemplary and other embodiments could include additional vehicle systems that may be controlled by the response system **199**. Moreover, these systems are not limited to a single impact or function. Also, these systems are not limited to a single benefit. Instead, the impacts and benefits listed for each system are intended as examples. A detailed explanation of the control of many different vehicle systems is discussed in detail below and shown in the Figures.

A response system can include provisions for determining a level of drowsiness for a driver. The term "level of drowsiness" as used throughout this detailed description and in the claims refers to any numerical or other kind of value for distinguishing between two or more states of drowsiness. For example, in some cases, the level of drowsiness may be given as a percentage between 0% and 100%, where 0% refers to a driver that is totally alert and 100% refers to a driver that is fully drowsy or even asleep. In other cases, the level of drowsiness could be a value in the range between 1 and 10. In still other cases, the level of drowsiness may not be a numerical value, but could be associated with a given discrete state, such as "not drowsy", "slightly drowsy", "drowsy", "very drowsy" and "extremely drowsy". Moreover, the level of drowsiness could be a discrete value or a continuous value. In some cases, the level of drowsiness may be associated with a body state index, which is discussed in further detail below.

FIG. **6** illustrates an embodiment of a process of modifying the operation of a vehicle system according to the level of drowsiness detected. In some embodiments, some of the following steps could be accomplished by a response system **199** of a motor vehicle. In some cases, some of the following steps may be accomplished by an ECU **150** of a motor vehicle. In other embodiments, some of the following steps could be accomplished by other components of a motor vehicle, such as vehicle systems **172**. In still other embodiments, some of the following steps could be accomplished by any combination of systems or components of the vehicle. It will be understood that in some embodiments one or more of the following steps may be optional. For purposes of reference, the following method discusses components shown in FIGS. **1** through **3**, including the response system **199**.

In step **442**, response system **199** may receive monitoring information. In some cases, the monitoring information can be received from one or more sensors. In other cases, the monitoring information can be received from one or more autonomic monitoring systems. In still other cases, the monitoring information can be received from one or more vehicle systems. In still other cases, the monitoring information can be received from any other device of the motor vehicle **100**. In still other cases, the monitoring information can be received from any combination of sensors, monitoring systems, vehicles systems or other devices.

In step **444**, the response system **199** may determine if the driver is drowsy. If the driver is not drowsy, the response system **199** may return back to step **442**. If the driver is drowsy, the response system **199** may proceed to step **446**. In step **446**, the response system **199** may determine the level of drowsiness. As discussed above, the level of drowsiness could be represented by a numerical value or could be a discrete state labeled by a name or variable. In step **448**, the response system **199** may modify the control of one or more vehicle systems according to the level of drowsiness.

Examples of systems that can be modified according to the level of drowsiness include, but are not limited to: the antilock brake system **224**, the automatic brake prefill system **228**, the brake assist system **226**, the auto cruise control system **238**, the electronic stability control system **222**, the collision warning system **234**, the lane keep assist system **244**, the blind spot indicator system **242**, the electronic pretensioning system **254** and the climate control system **250**. In addition, the electronic power steering system **160** could be modified according to the level of drowsiness, as could the visual devices **166**, the audio devices **168** and the tactile devices **170**. In some embodiments, the timing and/or intensity associated with various warning indicators (visual indicators, audible indicators, haptic indicators, etc.) could be modified according to the level of drowsiness. For example, in one embodiment, the electronic pretensioning system **254** could increase or decrease the intensity and/or frequency of automatic seatbelt tightening to warn the driver at a level appropriate for the level of drowsiness.

As an example, when a driver is extremely drowsy, the antilock brake system **224** may be modified to achieve a shorter stopping distance than when a driver is somewhat drowsy. As another example, the automatic brake prefill system **228** could adjust the amount of brake fluid delivered during a prefill or the timing of the prefill according to the level of drowsiness. Likewise, the level of brake assistance provided by the brake assist system **226** could be varied according to the level of drowsiness, with assistance increased with drowsiness. Also, the headway distance for the auto cruise control system **238** could be increased with the level of drowsiness. In addition, the error between the yaw rate and the steering yaw rate determined by electronic stability control system **222** could be decreased in proportion to the level of drowsiness. In some cases, the collision warning system **234** and the lane departure system **240** could provide earlier warnings to a drowsy driver, where the timing of the warnings is modified in proportion to the level of drowsiness. Likewise, the detection area size associated with the blind spot indicator system **242** could be varied according to the level of drowsiness. In some cases, the strength of a warning pulse generated by the electronic pretensioning system **254** may vary in proportion to the level of drowsiness. Also, the climate control system **250** may vary the number of degrees that the temperature is changed according to the level of drowsiness. Moreover, the brightness of the lights activated by the visual devices **166** when a driver is drowsy could be varied in proportion to the level of drowsiness. Also, the volume of sound generated by the audio devices **168** could be

varied in proportion to the level of drowsiness. In addition, the amount of vibration or tactile stimulation delivered by the tactile devices **170** could be varied in proportion to the level of drowsiness. In some cases, the maximum speed at which the low speed follow system **230** operates could be modified according to the level of drowsiness. Likewise, the on/off setting or the maximum speed at which the cruise control system **232** can be set may be modified in proportion to the level of drowsiness. Additionally, the degree of power steering assistance provided by the electronic power steering system **160** could be varied in proportion to the level of drowsiness. Also, the distance that the collision mitigation braking system begins to brake can be lengthened or the lane keep assist system could be modified so that the driver must provide more input to the system.

FIG. **7** illustrates another embodiment of a process of modifying the operation of a vehicle system according to the level of drowsiness detected. In some embodiments, some of the following steps could be accomplished by a response system **199** of a motor vehicle. In some cases, some of the following steps may be accomplished by an ECU **150** of a motor vehicle. In other embodiments, some of the following steps could be accomplished by other components of a motor vehicle, such as vehicle systems **172**. In still other embodiments, some of the following steps could be accomplished by any combination of systems or components of the vehicle. It will be understood that in some embodiments one or more of the following steps may be optional. For purposes of reference, the following method discusses components shown in FIGS. **1** through **3**, the including response system **199**.

In step **452**, the response system **199** may receive monitoring information, as discussed above and with respect to step **442** of FIG. **6**. In step **454**, the response system **199** can receive any kind of vehicle operating information from one or more vehicle systems. The type of operating information received during step **454** may vary according to the type of vehicle system involved. For example, if the current process is used for operating a brake assist system, the operating information received may be brake pressure, vehicle speed and other operating parameters related to a brake assist system. As another example, if the current process is used for operating an electronic stability control system, the operation information may include yaw rate, wheel speed information, steering angle, lateral G, longitudinal G, road friction information as well as any other information used for operating an electronic stability control system.

Next, in step **456**, the response system **199** can determine a body state index of the driver. The term "body state index" refers to a measure of the drowsiness of a driver. In some cases, the body state index could be given as a numerical value. In other cases, the body state index could be given as a non-numerical value. Moreover, the body state index may range from values associated with complete alertness to values associated with extreme drowsiness or even a state in which the driver is asleep. In one embodiment, the body state index could take on the values 1, 2, 3 and 4, where 1 is the least drowsy and 4 is the most drowsy. In another embodiment, the body state index could take on values from 1-10.

Generally, the body state index of the driver can be determined using any of the methods discussed throughout this detailed description for detecting driver behavior as it relates to drowsiness. In particular, the level of drowsiness may be detected by sensing different degrees of driver behavior. For example, as discussed below, drowsiness in a driver may be detected by sensing eyelid movement and/or head movement. In some cases, the degree of eyelid movement (the degree to which the eyes are open or closed) or the degree of head movement (how tilted the head is) could be used to determine the body state index. In other cases, the autonomic monitoring systems could be used to determine the body state index. In still other cases, the vehicle systems could be used to determine the body state index. For example, the degree of unusual steering behavior or the degree of lane departures, alone or in combination, may indicate a certain body state index.

In step **458**, the response system **199** may determine a control parameter. The term "control parameter" as used throughout this detailed description and in the claims refers to a parameter used by one or more vehicle systems. In some cases, a control parameter may be an operating parameter that is used to determine if a particular function should be activated for a given vehicle system. For example, in situations where an electronic stability control system is used, the control parameter may be a threshold error in the steering yaw rate that is used to determine if stability control should be activated. As another example, in situations where automatic cruise control is used, the control parameter may be a parameter used to determine if cruise control should be automatically turned off. Further examples of control parameters are discussed in detail below and include, but are not limited to: stability control activation thresholds, brake assist activation thresholds, blind spot monitoring zone thresholds, time to collision thresholds, road crossing thresholds, lane keep assist system status, low speed follow status, electronic power steering status, auto cruise control status as well as other control parameters.

In some cases, a control parameter can be determined using vehicle system information as well as the body state index determined during step **456**. In other cases, only the body state index may be used to determine the control parameter. In still other cases, only the vehicle operating information may be used to determine the control parameter. Following step **458**, during step **460**, the response system **199** may operate a vehicle system using the control parameter.

FIGS. **8** and **9** illustrate schematic views of a general method for determining a control parameter using the body state index of the driver as well as vehicle operating information. In particular, FIG. **8** illustrates a schematic view of how the body state index can be used to retrieve a control coefficient. A control coefficient may be any value used in determining a control parameter. In some cases, the control coefficient varies as a function of body state index and is used as an input for calculating the control parameter. Examples of control coefficients include, but are not limited to: electronic stability control system coefficients, brake assist coefficients, blind spot zone warning coefficients, warning intensity coefficients, forward collision warning coefficients, lane departure warning coefficients and lane keep assist coefficients. Some systems may not use a control coefficient to determine the control parameter. For example, in some cases, the control parameter can be determined directly from the body state index.

In one embodiment, the value of the control coefficient **470** increases from 0% to 25% as the body state index increases from 1 to 4. In some cases, the control coefficient may serve as a multiplicative factor for increasing or decreasing the value of a control parameter. For example, in some cases when the body state index is 4, the control coefficient may be used to increase the value of a control parameter by 25%. In other embodiments, the control coefficient could vary in any other manner. In some cases, the control coefficient could vary linearly as a function of body state index. In other cases, the control coefficient could vary in a nonlinear manner as a function of body state index. In still other cases, the control

coefficient could vary between two or more discrete values as a function of body state index.

FIG. **9** illustrates a calculation unit **480** for determining a control parameter. The calculation unit **480** receives a control coefficient **482** and vehicle operating information **484** as inputs. The calculation unit **480** outputs the control parameter **486**. The vehicle operating information **484** can include any information necessary to calculate a control parameter. For example, in situations where the vehicle system is an electronic stability control system, the system may receive wheel speed information, steering angle information, roadway friction information, as well as other information necessary to calculate a control parameter that is used to determine when stability control should be activated. Moreover, as discussed above, the control coefficient **482** may be determined from the body state index using, for example, a look-up table. The calculation unit **480** then considers both the vehicle operating information and the control coefficient **482** in calculating the control parameter **486**.

It will be understood that the calculation unit **480** is intended to be any general algorithm or process used to determine one or more control parameters. In some cases, the calculation unit **480** may be associated with the response system **199** and/or the ECU **150**. In other cases, however, the calculation unit **480** could be associated with any other system or device of the motor vehicle **100**, including any of the vehicle systems discussed previously.

In some embodiments, a control parameter may be associated with a status or state of a given vehicle system. FIG. **10** illustrates an embodiment of a general relationship between the body state index of the driver and a system status **490**. The system shown here is general and could be associated with any vehicle system. For low body state index (1 or 2), the system status **490** is ON. However, if the body state index increases to 3 or 4 the system status **490** is turned OFF. In still other embodiments, a control parameter could be set to multiple different "states" according to the body state index. Using this arrangement, the state of a vehicle system can be modified according the body state index of a driver.

Detecting Driver Behavior

A response system can include provisions for detecting the state of a driver. In one example, the response system can detect the state of a driver by monitoring the eyes of a driver. FIG. **11** illustrates a schematic view of a scenario in which the response system **199** is capable of monitoring the state or behavior of a driver. Referring to FIG. **11**, the ECU **150** may receive information from an optical sensing device **162**. In some cases, the optical sensing device **162** may be a video camera that is mounted in the dashboard of the motor vehicle **100**. The information may comprise a sequence of images **500** that can be analyzed to determine the state of driver **502**. A first image **510** shows a driver **502** in a fully awake state, with eyes **520** wide open. However, a second image **512** shows the driver **502** in a drowsy state, with eyes **520** half open. Finally, a third image **514** shows the driver **502** in a very drowsy state with eyes **520** fully closed. In some embodiments, the response system **199** may be configured to analyze various images of the driver **502**. More specifically, the response system **199** may analyze the movement of eyes **520** to determine if a driver is in a normal state or a drowsy state.

It will be understood that any type of algorithm known in the art for analyzing eye movement from images can be used. In particular, any type of algorithm that can recognize the eyes and determine the position of the eyelids between a closed and open position may be used. Examples of such algorithms may include various pattern recognition algorithms known in the art.

In other embodiments, a thermal sensing device **163** can be used to sense eyelid movement. For example, as the eyelids move between opened and closed positions, the amount of thermal radiation received at a thermal sensing device **163** may vary. In other words, the thermal sensing device **163** can be configured to distinguish between various eyelid positions based on variations in the detected temperature of the eyes.

FIG. **12** illustrates an embodiment of a process for detecting drowsiness by monitoring eye movement in the driver. In some embodiments, some of the following steps could be accomplished by a response system **199** of a motor vehicle. In some cases, some of the following steps may be accomplished by an ECU **150** of a motor vehicle. In other embodiments, some of the following steps could be accomplished by other components of a motor vehicle, such as vehicle systems **172**. In still other embodiments, some of the following steps could be accomplished by any combination of systems or components of the vehicle. It will be understood that in some embodiments one or more of the following steps may be optional. For purposes of reference, the following method discusses components shown in FIGS. **1** through **3**, including the response system **199**.

In step **602**, the response system **199** may receive optical/thermal information. In some cases, optical information could be received from a camera or from an optical sensing device **162**. In other cases, thermal information could be received from a thermal sensing device **163**. In still other cases, both optical and thermal information could be received from a combination of optical and thermal devices.

In step **604**, the response system **199** may analyze eyelid movement. By detecting eyelid movement, the response system **199** can determine if the eyes of a driver are open, closed or in a partially closed position. The eyelid movement can be determined using either optical information or thermal information received during step **602**. Moreover, as discussed above, any type of software or algorithm can be used to determine eyelid movement from the optical or thermal information. Although the current embodiment comprises a step of analyzing eyelid movement, in other embodiments the movement of the eyeballs could also be analyzed.

In step **606**, the response system **199** determines the body state index of the driver according to the eyelid movement. The body state index may have any value. In some cases, the value ranges between 1 and 4, with 1 being the least drowsy and 4 being the drowsiest state. In some cases, to determine the body state index the response system **199** determines if the eyes are closed or partially closed for extended periods. In order to distinguish drooping eyelids due to drowsiness from blinking, the response system **199** may use a threshold time that the eyelids are closed or partially closed. If the eyes of the driver are closed or partially closed for periods longer than the threshold time, the response system **199** may determine that this is due to drowsiness. In such cases, the driver may be assigned a body state index that is greater than 1 to indicate that the driver is drowsy. Moreover, the response system **199** may assign different body state index values for different degrees of eyelid movement or eyelid closure.

In some embodiments, the response system **199** may determine the body state index based on detecting a single instance of prolonged eyelid closure or partial eyelid closure. Of course, it may also be the case that the response system **199** analyzes eye movement over an interval of time and looks at average eye movements.

In a further example, a response system can include provisions for detecting the state of a driver by monitoring the head of a driver. FIG. **13** illustrates a schematic view of a scenario in which the response system **199** is capable of monitoring the state or behavior of a driver. Referring to FIG. **13**, the ECU **150** may receive information from an optical sensing device **162**. In some cases, the optical sensing device **162** may be a video camera that is mounted in the dashboard of the motor vehicle **100**. In other cases, a thermal sensing device could be used. The information may comprise a sequence of images **700** that can be analyzed to determine the state of a driver **702**. A first image **710** shows the driver **702** in a fully awake state, with head **720** in an upright position. However, a second image **712** shows the driver **702** in a drowsy state, with head **720** leaning forward. Finally, a third image **714** shows the driver **702** in a drowsier state with head **720** fully tilted forward. In some embodiments, the response system **199** may be configured to analyze various images of the driver **702**. More specifically, the response system **199** may analyze the movement of head **720** to determine if a driver is in a normal state or a drowsy state.

It will be understood that any type of algorithm known in the art for analyzing head movement from images can be used. In particular, any type of algorithm that can recognize the head and determine the position of the head may be used. Examples of such algorithms may include various pattern recognition algorithms known in the art. It is appreciated that the response system **199** can recognize other head movements and the direction of said movements other than those described above, For example, in some embodiments, the response system **199** can be configured to analyze a rotation of the head **720** (e.g., head **720** of driver **702** is turned) and a rotation direction with respect to the driver **702** and the vehicle (i.e., to the left, right, back, forward). Further, the detection of a rotation and a rotation direction can be used to recognize an eye gaze direction of the driver **702** as is known in the art.

FIG. **14** illustrates an embodiment of a process for detecting drowsiness by monitoring head movement in the driver. In some embodiments, some of the following steps could be accomplished by a response system **199** of a motor vehicle. In some cases, some of the following steps may be accomplished by an ECU **150** of a motor vehicle. In other embodiments, some of the following steps could be accomplished by other components of a motor vehicle, such as vehicle systems **172**. In still other embodiments, some of the following steps could be accomplished by any combination of systems or components of the vehicle. It will be understood that in some embodiments one or more of the following steps may be optional. For purposes of reference, the following method discusses components shown in FIGS. **1** through **3**, including the response system **199**.

In step **802**, the response system **199** may receive optical and/or thermal information. In some cases, optical information could be received from a camera or an optical sensing device **162**. In other cases, thermal information could be received from a thermal sensing device **163**. In still other cases, both optical and thermal information could be received from a combination of optical and thermal devices.

In step **804**, the response system **199** may analyze head movement. By detecting head movement, the response system **199** can determine if a driver is leaning forward. The head movement can be determined using either optical information or thermal information received during step **802**. Moreover, as discussed above, any type of software or algorithm can be used to determine head movement from the optical or thermal information.

In step **806**, the response system **199** determines the body state index of the driver in response to the detected head movement. For example, in some cases, to determine the body state index of the driver, the response system **199** determines if the head is tilted in any direction for extended periods. In some cases, the response system **199** may determine if the head is tilting forward. In some cases, the response system **199** may assign a body state index depending on the level of tilt and/or the time interval over which the head remains tilted. For example, if the head is tilted forward for brief periods, the body state index may be assigned a value of 2, to indicate that the driver is slightly drowsy. If the head is titled forward for a significant period of time, the body state index may be assigned a value of 4 to indicate that the driver is extremely drowsy.

In some embodiments, the response system **199** may determine the body state index based on detecting a single instance of a driver tilting his or her head forward. Of course, it may also be the case that the response system **199** analyzes head movement over an interval of time and looks at average head movements.

In a further example, a response system can include provisions for detecting the state of a driver by monitoring the relative position of the driver's head with respect to a headrest. FIG. **15** illustrates a schematic view of a scenario in which the response system **199** is capable of monitoring the state or behavior of a driver. Referring to FIG. **15**, the ECU **150** may receive information from a proximity sensor **134**. In some cases, the proximity sensor **134** may be a capacitor. In other cases, the proximity sensor **134** may be a laser based sensor. In still other cases, any other kind of proximity sensor known in the art could be used. The response system **199** may monitor the distance between the driver's head and a headrest **137**. In particular, the response system **199** may receive information from a proximity sensor **134** that can be used to determine the distance between the driver's head and a headrest **137**. For example, a first configuration **131** shows a driver **139** in a fully awake state, with a head **138** disposed against headrest **137**. However, a second configuration **132** shows the driver **139** in a somewhat drowsy state. In this case, the head **138** has moved further away from the headrest **137** as the driver **139** slumps forward slightly. A third configuration **133** shows driver **139** in a fully drowsy state. In this case, the head **138** is moved still further away from the headrest **137** as the driver is further slumped over. In some embodiments, the response system **199** may be configured to analyze information related to the distance between the driver's head **138** and the headrest **137**. Moreover, the response system **199** can analyze head position and/or movement (including tilting, slumping and/or bobbing) to determine if the driver **139** is in a normal state or a drowsy state.

It will be understood that any type of algorithm known in the art for analyzing head distance and/or movement from proximity or distance information can be used. In particular, any type of algorithm that can determine the relative distance between a headrest and the driver's head can be used. Also, any algorithms for analyzing changes in distance to determine head motion could also be used. Examples of such algorithms may include various pattern recognition algorithms known in the art.

FIG. **16** illustrates an embodiment of a process for detecting drowsiness by monitoring the distance of the driver's head from a headrest. In some embodiments, some of the following steps could be accomplished by the response system **199** of a motor vehicle **100**. In some cases, some of the following steps may be accomplished by an ECU **150** of a motor vehicle. In other embodiments, some of the following steps could be

accomplished by other components of a motor vehicle, such as vehicle systems **172**. In still other embodiments, some of the following steps could be accomplished by any combination of systems or components of the vehicle. It will be understood that in some embodiments one or more of the following steps may be optional. For purposes of reference, the following method discusses components shown in FIGS. **1** through **3**, including the response system **199**.

In step **202**, the response system **199** may receive proximity information. In some cases, proximity information could be received from a capacitor or laser based sensor. In other cases, proximity information could be received from any other sensor. In step **204**, the response system **199** may analyze the distance of the head from a headrest. By determining the distance between the driver's head and the head rest, the response system **199** can determine if a driver is leaning forward. Moreover, by analyzing head distance over time, the response system **199** can also detect motion of the head. The distance of the head from the headrest can be determined using any type of proximity information received during step **202**. Moreover, as discussed above, any type of software or algorithm can be used to determine the distance of the head and/or head motion information.

In step **206**, the response system **199** determines the body state index of the driver in response to the detected head distance and/or head motion. For example, in some cases, to determine the body state index of the driver, the response system **199** determines if the head is leaning away from the headrest for extended periods. In some cases, the response system **199** may determine if the head is tilting forward. In some cases, the response system **199** may assign a body state index depending on the distance of the head from the head rest as well as from the time interval over which the head is located away from the headrest. For example, if the head is located away from the headrest for brief periods, the body state index may be assigned a value of 2, to indicate that the driver is slightly drowsy. If the head is located away from the headrest for a significant period of time, the body state index may be assigned a value of 4 to indicate that the driver is extremely drowsy. It will be understood that in some cases, a system could be configured so that the alert state of the driver is associated with a predetermined distance between the head and the headrest. This predetermined distance could be a factory set value or a value determined by monitoring a driver over time. Then, the body state index may be increased when the driver's head moves closer to the headrest or further from the headrest with respect to the predetermined distance. In other words, in some cases the system may recognize that the driver's head may tilt forward and/or backward as he or she gets drowsy.

In some embodiments, the response system **199** may determine the body state index based on detecting a single distance measurement between the driver's head and a headrest. Of course, it may also be the case that the response system **199** analyzes the distance between the driver's head and the headrest over an interval of time and uses average distances to determine body state index.

In some other embodiments, the response system **199** could detect the distance between the driver's head and any other reference location within the vehicle. For example, in some cases a proximity sensor could be located in a ceiling of the vehicle and the response system **199** may detect the distance of the driver's head with respect to the location of the proximity sensor. In other cases, a proximity sensor could be located in any other part of the vehicle. Moreover, in other embodiments, any other portions of a driver could be monitored for determining if a driver is drowsy or otherwise alert. For example, in still another embodiment, a proximity sensor could be used in the backrest of a seat to measure the distance between the backrest and the back of the driver.

In another example, a response system can include provisions for detecting abnormal steering by a driver for purposes of determining if a driver is drowsy. FIG. **17** illustrates a schematic view of the motor vehicle **100** being operated by a driver **902**. In this situation, ECU **150** may receive information related to the steering angle or steering position as a function of time. In addition, ECU **150** could also receive information about the torque applied to a steering wheel as a function of time. In some cases, the steering angle information or torque information can be received from an EPS system **160**, which may include a steering angle sensor as well as a torque sensor. By analyzing the steering position or steering torque over time, the response system **199** can determine if the steering is inconsistent, which may indicate that the driver is drowsy.

FIG. **18** illustrates an embodiment of a process for detecting drowsiness by monitoring the steering behavior of a driver. In some embodiments, some of the following steps could be accomplished by a response system **199** of a motor vehicle. In some cases, some of the following steps may be accomplished by an ECU **150** of a motor vehicle. In other embodiments, some of the following steps could be accomplished by other components of a motor vehicle, such as vehicle systems **172**. In still other embodiments, some of the following steps could be accomplished by any combination of systems or components of the vehicle. It will be understood that in some embodiments one or more of the following steps may be optional. For purposes of reference, the following method discusses components shown in FIGS. **1** through **3**, including the response system **199**.

In step **1002**, the response system **199** may receive steering angle information. In some cases, the steering angle information may be received from EPS **160** or directly from a steering angle sensor. Next, in step **1004**, the response system **199** may analyze the steering angle information. In particular, the response system **199** may look for patterns in the steering angle as a function of time that suggest inconsistent steering, which could indicate a drowsy driver. Any method of analyzing steering information to determine if the steering is inconsistent can be used. Moreover, in some embodiments, the response system **199** may receive information from lane keep assist system **244** to determine if a driver is steering the motor vehicle **100** outside of a current lane.

In step **1006**, the response system **199** may determine the body state index of the driver based on steering wheel movement. For example, if the steering wheel movement is inconsistent, the response system **199** may assign a body state index of 2 or greater to indicate that the driver is drowsy.

A response system can also include provisions for detecting abnormal driving behavior by monitoring lane departure information. FIG. **19** illustrates a schematic view of an embodiment of the motor vehicle **100** being operated by a driver **950**. In this situation, ECU **150** may receive lane departure information. In some cases, the lane departure information can be received from the LDW system **240**. Lane departure information could include any kind of information related to the position of a vehicle relative to one or more lanes, steering behavior, trajectory or any other kind of information. In some cases, the lane departure information could be processed information analyzed by the LDW system **240** that indicates some kind of lane departure behavior. By analyzing the lane departure information, the response system **199** can determine if the driving behavior is inconsistent, which may indicate that the driver is drowsy. In some embodi-

ments, whenever the LDW system **240** issues a lane departure warning, the response system **199** may determine that the driver is drowsy. Moreover, the level of drowsiness could be determined by the intensity of the warning.

FIG. **20** illustrates an embodiment of a process for detecting drowsiness by monitoring lane departure information. In some embodiments, some of the following steps could be accomplished by a response system **199** of a motor vehicle. In some cases, some of the following steps may be accomplished by an ECU **150** of a motor vehicle. In other embodiments, some of the following steps could be accomplished by other components of a motor vehicle, such as vehicle systems **172**. In still other embodiments, some of the following steps could be accomplished by any combination of systems or components of the vehicle. It will be understood that in some embodiments one or more of the following steps may be optional. For purposes of reference, the following method discusses components shown in FIGS. **1** through **3**, including the response system **199**.

In step **1020**, the response system **199** may receive lane departure information. In some cases, the lane departure information may be received from the LWD system **240** or directly from some kind of sensor (such as a steering angle sensor, or a relative position sensor). Next, in step **1022**, the response system **199** may analyze the lane departure information. Any method of analyzing lane departure information can be used.

In step **1024**, the response system **199** may determine the body state index of the driver based on lane departure information. For example, if the vehicle is drifting out of the current lane, the response system **199** may assign a body state index of 2 or greater to indicate that the driver is drowsy. Likewise, if the lane departure information is a lane departure warning from the LDW system **240**, the response system **199** may assign a body state index of 2 or greater to indicate that the driver is drowsy. Using this process, the response system **199** can use information from one or more vehicle systems **172** to help determine if a driver is drowsy. This is possible since drowsiness (or other types of inattentiveness) not only manifest as driver behaviors, but can also cause changes in the operation of the vehicle, which may be monitored by the various vehicle systems **172**.

FIG. **21** illustrates a schematic view of an embodiment of the motor vehicle **100**, in which the response system **199** is capable of detecting respiratory rate information. In particular, using a bio-monitoring sensor **164**, ECU **150** may be able to determine the number of breaths per minute taken by driver **1102**. This information can be analyzed to determine if the measured breaths per minute coincides with a normal state or a drowsy state. Breaths per minute is given as an example, any other autonomic information could also be monitored and used to determine this state.

FIG. **22** illustrates an embodiment of a process for detecting drowsiness by monitoring the autonomic information of a driver. In some embodiments, some of the following steps could be accomplished by a response system **199** of a motor vehicle. In some cases, some of the following steps may be accomplished by an ECU **150** of a motor vehicle. In other embodiments, some of the following steps could be accomplished by other components of a motor vehicle, such as the vehicle systems **172**. In still other embodiments, some of the following steps could be accomplished by any combination of systems or components of the vehicle. It will be understood that in some embodiments one or more of the following steps may be optional. For purposes of reference, the following method discusses components shown in FIGS. **1** through **3**, including the response system **199**.

In step **1202**, the response system **199** may receive information related to the autonomic nervous system of the driver. In some cases, the information can be received from a sensor. The sensor could be associated with any portion of the motor vehicle **100** including a seat, armrest or any other portion. Moreover, the sensor could be a portable sensor in some cases.

In step **1204**, the response system **199** may analyze the autonomic information. Generally, any method of analyzing autonomic information to determine if a driver is drowsy could be used. It will be understood that the method of analyzing the autonomic information may vary according to the type of autonomic information being analyzed. In step **1206**, the response system **199** may determine the body state index of the driver based on the analysis conducted during step **1204**.

It will be understood that the methods discussed above for determining the driver behavior (e.g., the driver state, the body state index) of a driver according to eye movement, head movement, steering wheel movement and/or sensing autonomic information are only intended to be exemplary and in other embodiments any other method of detecting the behavior of a driver, including behaviors associated with drowsiness, could be used. Moreover, it will be understood that in some embodiments multiple methods for detecting driver behavior to determine a body state index could be used simultaneously.

Exemplary Operational Response to Stimulate a Driver

In one embodiment, a response system can include provisions for controlling one or more vehicle systems to help wake a drowsy driver based on the detected driver behavior. For example, a response system could control various systems to stimulate a driver in some way (visually, orally, or through movement, for example). A response system could also change ambient conditions in a motor vehicle to help wake the driver and thereby increase the driver's alertness.

FIGS. **23** and **24** illustrate a schematic view of a method of waking a driver by modifying the control of an electronic power steering system. Referring to FIG. **23**, a driver **1302** is drowsy. The response system **199** may detect that the driver **1302** is drowsy using any of the detection methods mentioned previously or through any other detection methods. During normal operation, the EPS system **160** functions to assist a driver in turning a steering wheel **1304**. However, in some situations, it may be beneficial to reduce this assistance. For example, as seen in FIG. **24**, by decreasing the power steering assistance, the driver **1302** must put more effort into turning the steering wheel **1304**. This may have the effect of waking up the driver **1302**, since the driver **1302** must now apply a greater force to turn the steering wheel **1304**.

FIG. **25** illustrates an embodiment of a process for controlling power steering assistance according to the detected level of drowsiness for a driver. In some embodiments, some of the following steps could be accomplished by a response system **199** of a motor vehicle. In some cases, some of the following steps may be accomplished by an ECU **150** of a motor vehicle. In other embodiments, some of the following steps could be accomplished by other components of a motor vehicle, such as vehicle systems **172**. In still other embodiments, some of the following steps could be accomplished by any combination of systems or components of the vehicle. It will be understood that in some embodiments one or more of the following steps may be optional. For purposes of refer-

ence, the following method discusses components shown in FIGS. **1** through **3**, including the response system **199**.

In step **1502**, the response system **199** may receive drowsiness information. In some cases, the drowsiness information includes whether a driver is in a normal state or a drowsy state. Moreover, in some cases, the drowsiness information could include a value indicating the level of drowsiness, for example on a scale of 1 to 10, with 1 being the least drowsy and 10 being the drowsiest.

In step **1504**, the response system **199** determines if the driver is drowsy based on the drowsiness information. If the driver is not drowsy, the response system **199** returns back to step **1502**. If the driver is drowsy, the response system **199** proceeds to step **1506**. In step **1506**, steering wheel information may be received. In some cases, the steering wheel information can be received from an EPS system **160**. In other cases, the steering wheel information can be received from a steering angle sensor or a steering torque sensor directly.

In step **1508**, the response system **199** may determine if the driver is turning the steering wheel. If not, the response system **199** returns to step **1502**. If the driver is turning the steering wheel, the response system **199** proceeds to step **1510** where the power steering assistance is decreased. It will be understood that in some embodiments, the response system **199** may not check to see if the wheel is being turned before decreasing power steering assistance.

FIG. **26** illustrates an embodiment of a detailed process for controlling power steering assistance to a driver according to a body state index. In step **1520**, the response system **199** may receive steering information. The steering information can include any type of information including steering angle, steering torque, rotational speed, motor speed as well as any other steering information related to a steering system and/or a power steering assistance system. In step **1522**, the response system **199** may provide power steering assistance to a driver. In some cases, the response system **199** provides power steering assistance in response to a driver request (for example, when a driver turns on a power steering function). In other cases, the response system **199** automatically provides power steering assistance according to vehicle conditions or other information.

In step **1524**, the response system **199** may determine the body state index of a driver using any of the methods discussed above for determining a body state index. Next, in step **1526**, the response system **199** may set a power steering status corresponding to the amount of steering assistance provided by the electronic power steering system. For example, in some cases, the power steering status is associated with two states, including a "low" state and a "standard" state. In the "standard" state, power steering assistance is applied at a predetermined level corresponding to an amount of power steering assistance that improves drivability and helps increase the driving comfort of the user. In the "low" state, less steering assistance is provided, which requires increased steering effort by a driver. As indicated by look-up table **1540**, the power steering status may be selected according to the body state index. For example, if the body state index is 1 or 2 (corresponding to no drowsiness or slight drowsiness), the power steering status is set to the standard state. If, however, the body state index is 3 or 4 (corresponding to a drowsy condition of the driver), the power steering status is set to the low state. It will be understood that look-up table **1540** is only intended to be exemplary and in other embodiments the relationship between body state index and power steering status can vary in any manner.

Once the power steering status is set in step **1526**, the response system **199** proceeds to step **1528**. In step **1528**, the response system **199** determines if the power steering status is set to low. If not, the response system **199** may return to step **1520** and continue operating power steering assistance at the current level. However, if the response system **199** determines that the power steering status is set to low, the response system **199** may proceed to step **1530**. In step **1530**, the response system **199** may ramp down power steering assistance. For example, if the power steering assistance is supplying a predetermined amount of torque assistance, the power steering assistance may be varied to reduce the assisting torque. This requires the driver to increase steering effort. For a drowsy driver, the increased effort required to turn the steering wheel may help increase his or her alertness and improve vehicle handling.

In some cases, during step **1532**, the response system **199** may provide a warning to the driver of the decreased power steering assistance. For example, in some cases, a dashboard light reading "power steering off" or "power steering decreased" could be turned on. In other cases, a navigation screen or other display screen associated with the vehicle could display a message indicating the decreased power steering assistance. In still other cases, an audible or haptic indicator could be used to alert the driver. This helps to inform the driver of the change in power steering assistance so the driver does not become concerned of a power steering failure.

FIGS. **27** and **28** illustrate schematic views of a method of helping to wake a drowsy driver by automatically modifying the operation of a climate control system. Referring to FIG. **27**, a climate control system **250** has been set to maintain a temperature of 75 degrees Fahrenheit inside the cabin of the motor vehicle **100** by a driver **1602**. This is indicated on display screen **1620**. As the response system **199** detects that the driver **1602** is becoming drowsy, the response system **199** may automatically change the temperature of the climate control system **250**. As seen in FIG. **28**, the response system **199** automatically adjusts the temperature to 60 degrees Fahrenheit. As the temperature inside the motor vehicle **100** cools down, the driver **1602** may become less drowsy, which helps the driver **1602** to be more alert while driving. In other embodiments, the temperature may be increased in order to make the driver more alert.

FIG. **29** illustrates an embodiment of a process for helping to wake a driver by controlling the temperature in a vehicle. In some embodiments, some of the following steps could be accomplished by a response system **199** of a motor vehicle. In some cases, some of the following steps may be accomplished by an ECU **150** of a motor vehicle. In other embodiments, some of the following steps could be accomplished by other components of a motor vehicle, such as vehicle systems **172**. In still other embodiments, some of the following steps could be accomplished by any combination of systems or components of the vehicle. It will be understood that in some embodiments one or more of the following steps may be optional. For purposes of reference, the following method discusses components shown in FIGS. **1** through **3**, including the response system **199**.

In step **1802**, the response system **199** may receive drowsiness information. In step **1804**, the response system **199** determines if the driver is drowsy. If the driver is not drowsy, the response system **199** proceeds back to step **1802**. If the driver is drowsy, the response system **199** proceeds to step **1806**. In step **1806**, the response system **199** automatically adjusts the cabin temperature. In some cases, the response system **199** may lower the cabin temperature by engaging a fan or air-conditioner. However, in some other cases, the response system **199** could increase the cabin temperature using a fan or heater. Moreover, it will be understood that the

embodiments are not limited to changing temperature and in other embodiments other aspects of the in-cabin climate could be changed, including airflow, humidity, pressure or other ambient conditions. For example, in some cases, a response system could automatically increase the airflow into the cabin, which may stimulate the driver and help reduce drowsiness.

FIGS. **30** and **31** illustrate schematic views of methods of alerting a drowsy driver using visual, audible and tactile feedback for a driver. Referring to FIG. **30**, a driver **1902** is drowsy as the motor vehicle **100** is moving. Once the response system **199** detects this drowsy state, the response system **199** may activate one or more feedback mechanisms to help wake the driver **1902**. Referring to FIG. **31**, three different methods of waking a driver are shown. In particular, the response system **199** may control one or more of the tactile devices **170**. Examples of tactile devices include vibrating devices (such as a vibrating seat or massaging seat) or devices whose surface properties can be modified (for example, by heating or cooling or by adjusting the rigidity of a surface). In one embodiment, the response system **199** may operate the driver seat **190** to shake or vibrate. This may have the effect of waking the driver **1902**. In other cases, steering wheel **2002** could be made to vibrate or shake. In addition, in some cases, the response system **199** could activate one or more lights or other visual indicators. For example, in one embodiment, a warning may be displayed on display screen **2004**. In one example, the warning may be "Wake!" and may include a brightly lit screen to catch the driver's attention. In other cases, overhead lights or other visual indicators could be turned on to help wake the driver. In some embodiments, the response system **199** could generate various sounds through speakers **2010**. For example, in some cases, the response system **199** could activate a radio, CD player, MP3 player or other audio device to play music or other sounds through the speakers **2010**. In other cases, the response system **199** could play various recordings stored in memory, such as voices that tell a driver to wake.

FIG. **32** illustrates an embodiment of a process for waking up a driver using various visual, audible and tactile stimuli. In some embodiments, some of the following steps could be accomplished by a response system **199** of a motor vehicle. In some cases, some of the following steps may be accomplished by an ECU **150** of a motor vehicle. In other embodiments, some of the following steps could be accomplished by other components of a motor vehicle, such as vehicle systems **172**. In still other embodiments, some of the following steps could be accomplished by any combination of systems or components of the vehicle. It will be understood that in some embodiments one or more of the following steps may be optional. For purposes of reference, the following method discusses components shown in FIGS. **1** through **3**, including the response system **199**.

In step **2102**, the response system **199** may receive drowsiness information. In step **2104**, the response system **199** determines if the driver is drowsy. If the driver is not drowsy, the response system **199** returns to step **2102**. Otherwise, the response system **199** proceeds to step **2106**. In step **2106**, the response system **199** may provide tactile stimuli to the driver. For example, the response system **199** could control a seat or other portion of the motor vehicle **100** to shake and/or vibrate (for example, a steering wheel). In other cases, the response system **199** could vary the rigidity of a seat or other surface in the motor vehicle **100**.

In step **2108**, the response system **199** may turn on one or more lights or indicators. The lights could be any lights associated with the motor vehicle **100** including dashboard lights, roof lights or any other lights. In some cases, the response system **199** may provide a brightly lit message or background on a display screen, such as a navigation system display screen or climate control display screen. In step **2110**, the response system **199** may generate various sounds using speakers in the motor vehicle **100**. The sounds could be spoken words, music, alarms or any other kinds of sounds. Moreover, the volume level of the sounds could be chosen to ensure the driver is put in an alert state by the sounds, but not so loud as to cause great discomfort to the driver.

A response system can include provisions for controlling a seatbelt system to help wake a driver. In some cases, a response system can control an electronic pretensioning system for a seatbelt to provide a warning pulse to a driver.

FIGS. **33** and **34** illustrate schematic views of an embodiment of a response system controlling an electronic pretensioning system for a seatbelt. Referring to FIGS. **33** and **34**, as a driver **2202** begins to feel drowsy, the response system **199** may automatically control EPT system **254** to provide a warning pulse to the driver **2202**. In particular, a seatbelt **2210** may be initially loose as seen in FIG. **33**, but as the driver **2202** gets drowsy, the seatbelt **2210** is pulled taut against the driver **2202** for a moment as seen in FIG. **34**. This momentary tightening serves as a warning pulse that helps to wake the driver **2202**.

FIG. **35** illustrates an embodiment of a process for controlling the EPT system **254**. During step **2402**, the response system **199** receives drowsiness information. During step **2404**, the response system **199** determines if the driver is drowsy. If the driver is not drowsy, the response system **199** returns to step **2402**. If the driver is drowsy, the response system **199** proceeds to step **2406** where a warning pulse is sent. In particular, the seatbelt may be tightened to help wake or alert the driver.

Exemplary Operational Response of Other Vehicle Systems

In addition to controlling various vehicle systems to stimulate a driver, a motor vehicle can also include other provisions for controlling various vehicle systems (e.g., the vehicle systems in FIG. **2**) based on the driver behavior. The methods and systems for controlling various vehicle systems discussed herein are exemplary and it is understood that other modifications to other vehicle systems are contemplated.

For example, a motor vehicle can include provisions for adjusting various brake control systems according to the behavior of a driver. For example, a response system can modify the control of antilock brakes, brake assist, brake prefill as well as other braking systems when a driver is drowsy. This arrangement helps to increase the effectiveness of the braking system in hazardous driving situations that may result when a driver is drowsy.

FIGS. **36** and **37** illustrate schematic views of the operation of an antilock braking system. Referring to FIG. **36**, when a driver **2502** is fully awake, the ABS system **224** may be associated with a first stopping distance **2520**. In particular, for a particular initial speed **2540**, as a driver **2502** depresses brake pedal **2530**, the motor vehicle **100** may travel to the first stopping distance **2520** before coming to a complete stop. Thus, the first stopping distance **2520** may be the result of various operating parameters of the ABS system **224**.

Referring now to FIG. **37**, as the driver **2502** becomes drowsy, the response system **199** may modify the control of the ABS system **224**. In particular, in some cases, one or more operating parameters of the ABS system **224** may be changed to decrease the stopping distance. In this case, as the driver **2502** depresses a brake pedal **2530**, the motor vehicle **100** may travel to a second stopping distance **2620** before coming

to a complete stop. In one embodiment, the second stopping distance **2620** may be substantially shorter than the first stopping distance **2520**. In other words, the stopping distance may be decreased when the driver **2502** is drowsy. Since a drowsy driver may engage the brake pedal later due to a reduced awareness, the ability of the response system **199** to decrease the stopping distance may help compensate for the reduced reaction time of the driver. In another embodiment, if the vehicle is on a slippery surface the reduction in stopping may not occur and instead tactile feedback may be applied through the brake pedal.

FIG. **38** illustrates an embodiment of a process for modifying the control of an antilock braking system according to the behavior of a driver. In some embodiments, some of the following steps could be accomplished by a response system **199** of a motor vehicle. In some cases, some of the following steps may be accomplished by an ECU **150** of a motor vehicle. In other embodiments, some of the following steps could be accomplished by other components of a motor vehicle, such as vehicle systems **172**. In still other embodiments, some of the following steps could be accomplished by any combination of systems or components of the vehicle. It will be understood that in some embodiments one or more of the following steps may be optional. For purposes of reference, the following method discusses components shown in FIGS. **1** through **3**, including the response system **199**.

In step **2702**, the response system **199** may receive drowsiness information. In step **2704**, the response system **199** may determine if the driver is drowsy. If the driver is not drowsy, the response system **199** returns to step **2702**. If the driver is drowsy, the response system **199** may proceed to step **2706**. In step **2706**, the response system **199** may determine the current stopping distance. The current stopping distance may be a function of the current vehicle speed, as well as other operating parameters including various parameters associated with the brake system. In step **2708**, the response system **199** may automatically decrease the stopping distance. This may be achieved by modifying one or more operating parameters of the ABS system **224**. For example, the brake line pressure can be modified by controlling various valves, pumps and/or motors within the ABS system **224**.

In some embodiments, a response system can automatically prefill one or more brake lines in a motor vehicle in response to driver behavior. FIG. **39** illustrates an embodiment of a process for controlling brake lines in a motor vehicle in response to driver behavior. In some embodiments, some of the following steps could be accomplished by a response system **199** of a motor vehicle. In some cases, some of the following steps may be accomplished by an ECU **150** of a motor vehicle. In other embodiments, some of the following steps could be accomplished by other components of a motor vehicle, such as vehicle systems **172**. In still other embodiments, some of the following steps could be accomplished by any combination of systems or components of the vehicle. It will be understood that in some embodiments one or more of the following steps may be optional. For purposes of reference, the following method discusses components shown in FIGS. **1** through **3**, including the response system **199**.

In step **2802**, the response system **199** may receive drowsiness information. In step **2804**, the response system **199** may determine if the driver is drowsy. If the driver is not drowsy, the response system **199** may return to step **2802**. If the driver is drowsy, the response system **199** may automatically prefill the brake lines with brake fluid in step **2806**. For example, the response system **199** may use the automatic brake prefill system **228**. In some cases, this may help increase braking response if a hazardous condition arises while the driver is drowsy. It will be understood that any number of brake lines could be prefilled during step **2806**. Moreover, any provisions known in the art for prefilling brake lines could be used including any pumps, valves, motors or other devices needed to supply brake fluid automatically to brake lines.

Some vehicles may be equipped with brake assist systems that help reduce the amount of force a driver must apply to engage the brakes. These systems may be activated for older drivers or any other drivers who may need assistance with braking. In some cases, a response system could utilize the brake assist systems when a driver is drowsy, since a drowsy driver may not be able to apply the necessary force to the brake pedal for stopping a vehicle quickly.

FIG. **40** illustrates an embodiment of a method for controlling automatic brake assist in response to driver behavior. In step **2902**, the response system **199** may receive drowsiness information. In step **2904**, the response system **199** may determine if the driver is drowsy. If the driver is not drowsy, the response system **199** proceeds back to step **2902**. If the driver is drowsy, the response system **199** may determine if the brake assist system **226** is already on in step **2906**. If the brake assist system **226** is already on, the response system **199** may return to step **2902**. If the brake assist system **226** is not currently active, the response system **199** may turn on the brake assist system **226** in step **2908**. This arrangement allows for braking assistance to a drowsy driver, since the driver may not have sufficient ability to supply the necessary braking force in the event that the motor vehicle **100** must be stopped quickly.

In some embodiments, a response system could modify the degree of assistance in a brake assist system. For example, a brake assist system may operate under normal conditions with a predetermined activation threshold. The activation threshold may be associated with the rate of change of the master cylinder brake pressure. If the rate of change of the master cylinder brake pressure exceeds the activation threshold, brake assist may be activated. However, when a driver is drowsy, the brake assist system may modify the activation threshold so that brake assist is activated sooner. In some cases, the activation threshold could vary according to the degree of drowsiness. For example, if the driver is only slightly drowsy, the activation threshold may be higher than when the driver is extremely drowsy.

FIG. **41** illustrates an embodiment of a detailed process for controlling automatic brake assist in response to driver behavior. In particular, FIG. **41** illustrates a method in which brake assist is modified according to the body state index of the driver. In step **2930**, the response system **199** may receive braking information. Braking information can include information from any sensors and/or vehicle systems. In step **2932**, the response system **199** may determine if a brake pedal is depressed. In some cases, the response system **199** may receive information that a brake switch has been applied to determine if the driver is currently braking. In other cases, any other vehicle information can be monitored to determine if the brakes are being applied. In step **2934**, the response system **199** may measure the rate of brake pressure increase. In other words, the response system **199** determines how fast the brake pressure is increasing, or how "hard" the brake pedal is being depressed. In step **2936**, the response system **199** sets an activation threshold. The activation threshold corresponds to a threshold for the rate of brake pressure increase. Details of this step are discussed in detail below.

In step **2938**, the response system **199** determines if the rate of brake pressure increase exceeds the activation threshold. If not, the response system **199** proceeds back to step **2930**.

Otherwise, the response system **199** proceeds to step **2940**. In step **2940**, the response system **199** activates a modulator pump and/or valves to automatically increase the brake pressure. In other words, in step **2940**, the response system **199** activates brake assist. This allows for an increase in the amount of braking force applied at the wheels.

FIG. **42** illustrates an embodiment of a process of selecting the activation threshold discussed above. In some embodiments, the process shown in FIG. **42** corresponds to step **2936** of FIG. **41**. In step **2950**, the response system **199** may receive the brake pressure rate and vehicle speed as well as any other operating information. The brake pressure rate and vehicle speed correspond to current vehicle conditions that may be used for determining an activation threshold under normal operating conditions. In step **2952**, an initial threshold setting may be determined according to the vehicle operating conditions.

In order to accommodate changes in brake assist due to drowsiness, the initial threshold setting may be modified according to the state of the driver. In step **2954**, the response system **199** determines the body state index of the driver using any method discussed above. Next, in step **2956**, the response system **199** determines a brake assist coefficient. As seen in look-up table **2960**, the brake assist coefficient may vary between 0% and 25% according to the body state index. Moreover, the brake assist coefficient generally increases as the body state index increases. In step **2958**, the activation threshold is selected according to the initial threshold setting and the brake assist coefficient. If the brake assist coefficient has a value of 0%, the activation threshold is just equal to the initial threshold setting. However, if the brake assist coefficient has a value of 25%, the activation threshold may be modified by up to 25% in order to increase the sensitivity of the brake assist when the driver is drowsy. In some cases, the activation threshold may be increased by up to 25% (or any other amount corresponding to the brake assist coefficient). In other cases, the activation threshold may be decreased by up to 25% (or any other amount corresponding to the brake assist coefficient).

A motor vehicle can include provisions for increasing vehicle stability when a driver is drowsy. In some cases, a response system can modify the operation of an electronic stability control system. For example, in some cases, a response system could ensure that a detected yaw rate and a steering yaw rate (the yaw rate estimated from steering information) are very close to one another. This can help enhance steering precision and reduce the likelihood of hazardous driving conditions while the driver is drowsy.

FIGS. **43** and **44** are schematic views of an embodiment of the motor vehicle **100** turning around a curve in roadway **3000**. Referring to FIG. **43**, a driver **3002** is wide awake and turning a steering wheel **3004**. Also shown in FIG. **43** are a driver intended path **3006** and an actual vehicle path **3008**. The driver intended path may be determined from steering wheel information, yaw rate information, lateral g information as well as other kinds of operating information. The driver intended path represents the ideal path of the vehicle, given the steering input from the driver. However, due to variations in road traction as well as other conditions, the actual vehicle path may vary slightly from the driver intended path. Referring to FIG. **44**, as the driver **3002** gets drowsy, the response system **199** modifies the operation of the electronic stability control system **222**. In particular, the ESC system **222** is modified so that the actual vehicle path **3104** is closer to the driver intended path **3006**. This helps to minimize the difference between the driver intended path and the actual vehicle path when the driver is drowsy, which can help improve driving precision.

FIG. **45** illustrates an embodiment of a process for controlling an electronic vehicle stability system according to driver behavior. In some embodiments, some of the following steps could be accomplished by a response system **199** of a motor vehicle. In some cases, some of the following steps may be accomplished by an ECU **150** of a motor vehicle. In other embodiments, some of the following steps could be accomplished by other components of a motor vehicle, such as vehicle systems **172**. In still other embodiments, some of the following steps could be accomplished by any combination of systems or components of the vehicle. It will be understood that in some embodiments one or more of the following steps may be optional. For purposes of reference, the following method discusses components shown in FIGS. **1** through **3**, including the response system **199**.

In step **3202**, the response system **199** may receive drowsiness information. In step **3204**, the response system **199** determines if the driver is drowsy. If the driver is not drowsy, the response system **199** may return to step **3202**. Otherwise, the response system **199** receives yaw rate information in step **3206**. The yaw rate information could be received from a yaw rate sensor in some cases. In step **3208**, the response system **199** receives steering information. This could include, for example, the steering wheel angle received from a steering angle sensor. In step **3210**, the response system **199** determines the steering yaw rate using the steering information. In some cases, additional operating information could be used to determine the steering yaw rate. In step **3212**, the response system **199** may reduce the allowable error between the measured yaw rate and the steering yaw rate. In other words, the response system **199** helps minimize the difference between the driver intended path and the actual vehicle path.

In order to reduce the allowable error between the yaw rate and the steering yaw rate, the response system **199** may apply braking to one or more brakes of the motor vehicle **100** in order to maintain the motor vehicle **100** close to the driver intended path. Examples of maintaining a vehicle close to a driver intended path can be found in Ellis et al., U.S. Pat. No. 8,423,257, now U.S. patent application Ser. No. 12/725,587, filed Mar. 17, 2010, the entirety of which is hereby incorporated by reference.

FIG. **46** illustrates an embodiment of a process for controlling an electronic stability control system in response to driver behavior. In particular, FIG. **46** illustrates an embodiment in which the operation of the electronic stability control system is modified according to the body state index of the driver. In step **3238**, the response system **199** receives operating information. This information can include any operating information such as yaw rate, wheel speed, steering angles, as well as other information used by an electronic stability control system. In step **3240**, the response system **199** may determine if the vehicle behavior is stable. In particular, in step **3242**, the response system **199** measures the stability error of steering associated with under-steering or over-steering. In some cases, the stability is determined by comparing the actual path of the vehicle with the driver intended path.

In step **3244**, the response system **199** sets an activation threshold associated with the electronic stability control system. The activation threshold may be associated with a predetermined stability error. In step **3246**, the response system **199** determines if the stability error exceeds the activation threshold. If not, the response system **199** may return to step **3238**. Otherwise, the response system **199** may proceed to

step **3248**. In step **3248**, the response system **199** applies individual wheel brake control in order to increase vehicle stability. In some embodiments, the response system **199** could also control the engine to apply engine braking or modify cylinder operation in order to help stabilize the vehicle.

In some cases, in step **3250**, the response system **199** may activate a warning indicator. The warning indicator could be any dashboard light or message displayed on a navigation screen or other video screen. The warning indicator helps to alert a driver that the electronic stability control system has been activated. In some cases, the warning could be an audible warning and/or a haptic warning.

FIG. **47** illustrates an embodiment of a process for setting the activation threshold used in the previous method. In step **3260**, the response system **199** receives vehicle operating information. For example, the vehicle operating information can include wheel speed information, road surface conditions (such as curvature, friction coefficients, etc.), vehicle speed, steering angle, yaw rate as well as other operating information. In step **3262**, the response system **199** determines an initial threshold setting according to the operating information received in step **3260**. In step **3264**, the response system **199** determines the body state index of the driver.

In step **3266**, the response system **199** determines a stability control coefficient. As seen in look-up table **3270**, the stability control coefficient may be determined from the body state index. In one example, the stability control coefficient ranges from 0% to 25%. Moreover, the stability control coefficient generally increases with the body state index. For example, if the body state index is 1, the stability control coefficient is 0%. If the body state index is 4, the stability control coefficient is 25%. It will be understood that these ranges for the stability control coefficient are only intended to be exemplary and in other cases the stability control coefficient could vary in any other manner as a function of the body state index.

In step **3268**, the response system **199** may set the activation threshold using the initial threshold setting and the stability control coefficient. For example, if the stability control coefficient has a value of 25%, the activation threshold may be up to 25% larger than the initial threshold setting. In other cases, the activation threshold may be up to 25% smaller than the initial threshold setting. In other words, the activation threshold may be increased or decreased from the initial threshold setting in proportion to the value of the stability control coefficient. This arrangement helps to increase the sensitivity of the electronic stability control system by modifying the activation threshold in proportion to the state of the driver.

FIG. **48** illustrates a schematic view of the motor vehicle **100** equipped with a collision warning system **234**. The collision warning system **234** can function to provide warnings about potential collisions to a driver. For purposes of clarity, the term "host vehicle" as used throughout this detailed description and in the claims refers to any vehicle including a response system while the term "target vehicle" refers to any vehicle monitored by, or otherwise in communication with, a host vehicle. In the current embodiment, for example, the motor vehicle **100** may be a host vehicle. In this example, as the motor vehicle **100** approaches an intersection **3300** while a target vehicle **3302** passes through the intersection **3300**, the collision warning system **234** may provide a warning alert **3310** on a display screen **3320**. Further examples of collision warning systems are disclosed in Mochizuki, U.S. Pat. No. 8,558,718, now U.S. patent application Ser. No. 12/885,790, filed Sep. 20, 2010, and Mochizuki et al., U.S. Pat. No. 8,587,418, now U.S. patent application Ser. No. 12/845,092, filed Jul. 28, 2010, the entirety of both being hereby incorporated by reference.

FIG. **49** illustrates an embodiment of a process for modifying a collision warning system according to driver behavior. In some embodiments, some of the following steps could be accomplished by a response system **199** of a motor vehicle. In some cases, some of the following steps may be accomplished by an ECU **150** of a motor vehicle. In other embodiments, some of the following steps could be accomplished by other components of a motor vehicle, such as vehicle systems **172**. In still other embodiments, some of the following steps could be accomplished by any combination of systems or components of the vehicle. It will be understood that in some embodiments one or more of the following steps may be optional. For purposes of reference, the following method discusses components shown in FIGS. **1** through **3**, including the response system **199**.

In step **3402**, the response system **199** my receive drowsiness information. In step **3404**, the response system **199** may determine if the driver is drowsy. If the driver is not drowsy, the response system **199** may proceed back to step **3402**. Otherwise, the response system **199** may proceed to step **3406**. In step **3406**, the response system **199** may modify the operation of a collision warning system so that the driver is warned earlier about potential collisions. For example, if the collision warning system was initially set to warn a driver about a potential collision if the distance to the collision point is less than 25 meters, the response system **199** could modify the system to warn the driver if the distance to the collision point is less than 50 meters.

FIG. **50** illustrates an embodiment of a process for modifying a collision warning system according to driver behavior. In some embodiments, some of the following steps could be accomplished by a response system **199** of a motor vehicle. In some cases, some of the following steps may be accomplished by an ECU **150** of a motor vehicle. In other embodiments, some of the following steps could be accomplished by other components of a motor vehicle, such as vehicle systems **172**. In still other embodiments, some of the following steps could be accomplished by any combination of systems or components of the vehicle. It will be understood that in some embodiments one or more of the following steps may be optional. For purposes of reference, the following method discusses components shown in FIGS. **1** through **3**, including the response system **199**.

In step **3502**, the collision warning system **234** may retrieve the heading, position and speed of an approaching vehicle. In some cases, this information could be received from the approaching vehicle through a wireless network, such as a DSRC network. In other cases, this information could be remotely sensed using radar, lidar or other remote sensing devices.

In step **3504**, the collision warning system **234** may estimate a vehicle collision point. The vehicle collision point is the location of a potential collision between the motor vehicle **100** and the approaching vehicle, which could be traveling in any direction relative to the motor vehicle **100**. In some cases, in step **3504**, the collision warning system **234** may use information about the position, heading and speed of the motor vehicle **100** to calculate the vehicle collision point. In some embodiments, this information could be received from a GPS receiver that is in communication with the collision warning system **234** or the response system **199**. In other embodiments, the vehicle speed could be received from a vehicle speed sensor.

In step **3506**, the collision warning system **234** may calculate the distance and/or time to the vehicle collision point. In particular, to determine the distance, the collision warning system **234** may calculate the difference between the vehicle collision point and the current location of the motor vehicle **100**. Likewise, to determine the time to the collision warning system **234** could calculate the amount of time it will take to reach the vehicle collision point.

In step **3508**, the collision warning system **234** may receive drowsiness information from the response system **199**, or any other system or components. In step **3509**, the collision warning system **234** may determine if the driver is drowsy. If the driver is not drowsy, the collision warning system **234** may proceed to step **3510**, where a first threshold parameter is retrieved. If the driver is drowsy, the collision warning system **234** may proceed to step **3512**, where a second threshold distance is retrieved. The first threshold parameter and the second threshold parameter could be either time thresholds or distance thresholds, according to whether the time to collision or distance to collision was determined during step **3506**. In some cases, where both time and distance to the collision point are used, the first threshold parameter and the second threshold parameter can each comprise both a distance threshold and a time threshold. Moreover, it will be understood that the first threshold parameter and the second threshold parameter may be substantially different thresholds in order to provide a different operating configuration for the collision warning system **234** according to whether the driver is drowsy or not drowsy. Following both step **3510** and **3512**, collision warning system **234** proceeds to step **3514**. In step **3514**, the collision warning system **234** determines if the current distance and/or time to the collision point is less than the threshold parameter selected during the previous step (either the first threshold parameter or the second threshold parameter).

The first threshold parameter and the second threshold parameter could have any values. In some cases, the first threshold parameter may be less than the second threshold parameter. In particular, if the driver is drowsy, it may be beneficial to use a lower threshold parameter, since this corresponds to warning a driver earlier about a potential collision. If the current distance or time is less than the threshold distance or time (the threshold parameter), the collision warning system **234** may warn the driver in step **3516**. Otherwise, the collision warning system **234** may not warn the driver in step **3518**.

A response system can include provisions for modifying the operation of an auto cruise control system according to driver behavior. In some embodiments, a response system can change the headway distance associated with an auto cruise control system. In some cases, the headway distance is the closest distance a motor vehicle can get to a preceding vehicle. If the auto cruise control system detects that the motor vehicle is closer than the headway distance, the system may warn the driver and/or automatically slow the vehicle to increase the headway distance.

FIGS. **51** and **52** illustrate schematic views of the motor vehicle **100** cruising behind a preceding vehicle **3602**. In this situation, the auto cruise control system **238** is operating to automatically maintain a predetermined headway distance behind the preceding vehicle **3602**. When a driver **3600** is awake, auto cruise control system **238** uses a first headway distance **3610**, as seen in FIG. **51**. In other words, the auto cruise control system **238** automatically prevents the motor vehicle **100** from getting closer than the first headway distance **3610** to the preceding vehicle **3602**. As the driver **3600** becomes drowsy, as seen in FIG. **52**, the response system **199** may modify the operation of the auto cruise control system **238** so that the auto cruise control system **238** increases the headway distance to a second headway distance **3710**. The second headway distance **3710** may be substantially larger than the first headway distance **3610**, since the reaction time of the driver **3600** may be reduced when the driver **3600** is drowsy.

FIG. **53** illustrates an embodiment of a method of modifying the control of an auto cruise control system according to driver behavior. In some embodiments, some of the following steps could be accomplished by a response system **199** of a motor vehicle. In some cases, some of the following steps may be accomplished by an ECU **150** of a motor vehicle. In other embodiments, some of the following steps could be accomplished by other components of a motor vehicle, such as vehicle systems **172**. In still other embodiments, some of the following steps could be accomplished by any combination of systems or components of the vehicle. It will be understood that in some embodiments one or more of the following steps may be optional. For purposes of reference, the following method discusses components shown in FIGS. **1** through **3**, including the response system **199**.

In step **3802**, the response system **199** may receive drowsiness information. In step **3804**, the response system **199** may determine if the driver is drowsy. If the driver is not drowsy, the response system **199** may return to step **3802**. If the driver is drowsy, the response system **199** may proceed to step **3806**. In step **3806**, the response system **199** may determine if auto cruise control is being used. If not, the response system **199** may return back to step **3802**. If auto cruise control is being used, the response system **199** may proceed to step **3808**. In step **3808**, the response system **199** may retrieve the current headway distance for auto cruise control. In step **3810**, the response system **199** may increase the headway distance. With this arrangement, the response system **199** may help increase the distance between the motor vehicle **100** and other vehicles when a driver is drowsy to reduce the chances of a hazardous driving situation while the driver is drowsy.

FIG. **54** illustrates an embodiment of a process for controlling automatic cruise control in response to driver behavior. This embodiment could also apply to normal cruise control systems. In particular, FIG. **54** illustrates an embodiment of a process where the operation of an automatic cruise control system is varied in response to the body state index of a driver. In step **3930**, the response system **199** may determine that the automatic cruise control function is turned on. This may occur when a driver selects to turn on cruise control. In step **3931**, the response system **199** may determine the body state index of the driver using any method discussed above as well as any method known in the art. In step **3932**, the response system **199** may set the auto cruise control status based on the body state index of the driver. For example, look-up table **3950** indicates that the auto cruise control status is set to on for body state indexes of 1, 2 and 3. Also, the auto cruise control status is set to off for body state index of 4. In other embodiments, the auto cruise control status can be set according to body state index in any other manner.

In step **3934**, the response system **199** determines if the auto cruise control status is on. If so, the response system **199** proceeds to step **3942**. Otherwise, if the auto cruise control status is off, the response system **199** proceeds to step **3936**. In step **3936**, the response system **199** ramps down control of automatic cruise control. For example, in some cases the response system **199** may slow down the vehicle gradually to a predetermined speed. In step **3938**, the response system **199** may turn off automatic cruise control. In some cases, in step **3940**, the response system **199** may inform the driver that

automatic cruise control has been deactivated using a dashboard warning light or message displayed on a screen of some kind. In other cases, the response system **199** could provide an audible warning that automatic cruise control has been deactivated. In still other cases a haptic warning could be used.

If the auto cruise control status is determined to be on during step **3934**, the response system **199** may set the auto cruise control distance setting in step **3942**. For example, look-up table **3946** provides one possible configuration for a look-up table relating the body state index to a distance setting. In this case, a body state index of 1 corresponds to a first distance, a body state index of 2 corresponds to a second distance and a body state index of 3 corresponds to a third distance. Each distance may have a substantially different value. In some cases, the value of each headway distance may increase as the body state index increases in order to provide more headway room for drivers who are drowsy or otherwise inattentive. In step **3944**, the response system **199** may operate auto cruise control using the distance setting determined during step **3942**.

A response system can include provisions for automatically reducing a cruising speed in a cruise control system based on driver monitoring information. FIG. **55** illustrates an embodiment of a method for controlling a cruising speed. In some embodiments, some of the following steps could be accomplished by a response system **199** of a motor vehicle. In some cases, some of the following steps may be accomplished by an ECU **150** of a motor vehicle. In other embodiments, some of the following steps could be accomplished by other components of a motor vehicle, such as vehicle systems **172**. In still other embodiments, some of the following steps could be accomplished by any combination of systems or components of the vehicle. It will be understood that in some embodiments one or more of the following steps may be optional. For purposes of reference, the following method discusses components shown in FIGS. **1** through **3**, including the response system **199**.

In step **3902**, the response system **199** may receive drowsiness information. In step **3904**, the response system **199** may determine if the driver is drowsy. If the driver is not drowsy, the response system **199** returns to step **3902**, otherwise the response system **199** proceeds to step **3906**. In step **3906**, the response system **199** determines if cruise control is operating. If not, the response system **199** returns back to step **3902**. If cruise control is operating, the response system **199** determines the current cruising speed in step **3908**. In step **3910**, the response system **199** retrieves a predetermined percentage. The predetermined percentage could have any value between 0% and 100%. In step **3912**, the response system **199** may reduce the cruising speed by the predetermined percentage. For example, if the motor vehicle **100** is cruising at 60 mph and the predetermined percentage is 50%, the cruising speed may be reduced to 30 mph. In other embodiments, the cruising speed could be reduced by a predetermined amount, such as by 20 mph or 30 mph. In still other embodiments, the predetermined percentage could be selected from a range of percentages according to the driver body index. For example, if the driver is only slightly drowsy, the predetermined percentage could be smaller than the percentage used when the driver is very drowsy. Using this arrangement, the response system **199** may automatically reduce the speed of the motor vehicle **100**, since slowing the vehicle may reduce the potential risks posed by a drowsy driver.

FIG. **56** illustrates an embodiment of a process for controlling a low speed follow system in response to driver behavior. In step **3830**, the response system **199** may determine if the low speed follow system is on. "Low speed follow" refers to any system that is used for automatically following a preceding vehicle at low speeds.

In step **3831**, the response system **199** may determine the body state index of the driver. Next, in step **3832**, the response system **199** may set the low speed follow status based on the body state index of the driver. For example, look-up table **3850** shows an exemplary relationship between body state index and the low speed follow status. In particular, the low speed follow status varies between an "on" state and an "off" state. For low body state index (body state indexes of 1 or 2) the low speed follow status may be set to "on". For high body state index (body state indexes of 3 or 4) the low speed follow status may be set to "off". It will be understood that the relationship between body state index and low speed follow status shown here is only exemplary and in other embodiments the relationship could vary in any other manner.

In step **3834**, the response system **199** determines if the low speed follow status is on or off. If the low speed follow status is on, the response system **199** returns to step **3830**. Otherwise, the response system **199** proceeds to step **3836** when the low speed follow status is off. In step **3836**, the response system **199** may ramp down control of the low speed follow function. For example, the low speed follow system may gradually increase the headway distance with the preceding vehicle until the system is shut down in step **3838**. By automatically turning of low speed follow when a driver is drowsy, the response system **199** may help increase driver attention and awareness since the driver must put more effort into driving the vehicle.

In some cases, in step **3840**, the response system **199** may inform the driver that low speed follow has been deactivated using a dashboard warning light or message displayed on a screen of some kind. In other cases, the response system **199** could provide an audible warning that low speed follow has been deactivated.

A response system can include provisions for modifying the operation of a lane departure warning system, which helps alert a driver if the motor vehicle is unintentionally leaving the current lane. In some cases, a response system could modify when the lane departure warning system alerts a driver. For example, the lane keep departure warning system could warn the driver before the vehicle crosses a lane boundary line, rather than waiting until the vehicle has already crossed the lane boundary line.

FIGS. **57** and **58** illustrate schematic views of an embodiment of a method of modifying the operation of a lane departure warning system. Referring to FIGS. **57** and **58**, the motor vehicle **100** travels on a roadway **4000**. Under circumstances where a driver **4002** is fully alert (see FIG. **57**), the lane departure warning system **240** may wait until the motor vehicle **100** crosses lane a boundary line **4010** before providing a warning **4012**. However, in circumstances where the driver **4002** is drowsy (see FIG. **58**), the lane departure warning system **240** may provide the warning **4012** just prior to the moment when the motor vehicle **100** crosses the lane boundary line **4010**. In other words, the lane departure warning system **244** warns the driver **4002** earlier when the driver **4002** is drowsy. This may help improve the likelihood that the driver **4002** stays inside the current lane.

FIG. **59** illustrates an embodiment of a process of operating a lane departure warning system in response to driver behavior. In some embodiments, some of the following steps could be accomplished by a response system **199** of a motor vehicle. In some cases, some of the following steps may be accomplished by an ECU **150** of a motor vehicle. In other embodiments, some of the following steps could be accomplished by

other components of a motor vehicle, such as vehicle systems **172**. In still other embodiments, some of the following steps could be accomplished by any combination of systems or components of the vehicle. It will be understood that in some embodiments one or more of the following steps may be optional. For purposes of reference, the following method discusses components shown in FIGS. **1** through **3**, including the response system **199**.

In step **4202**, the response system **199** may retrieve drowsiness information. In step **4204**, the response system **199** may determine if the driver is drowsy. If the driver is not drowsy, the response system **199** proceeds back to step **4202**. Otherwise, the response system **199** proceeds to step **4206**. In step **4206**, the response system **199** may modify the operation of lane departure warning system **240** so that the driver is warned earlier about potential lane departures.

FIG. **60** illustrates an embodiment of a process for operating a lane departure warning system in response to driver behavior. In particular, FIG. **60** illustrates an embodiment of a process where the operation of a lane departure warning system is modified in response to the body state index of a driver. In step **4270**, the response system **199** receives roadway information. The roadway information can include road size, shape as well as the locations of any road markings or lines. In step **4272**, the response system **199** may determine the vehicle position relative to the road. In step **4274**, the response system **199** may calculate the time to lane crossing. This can be determined from vehicle position, vehicle turning information and lane location information.

In step **4276**, the response system **199** may set the road crossing threshold. The road crossing threshold may be a time associated with the time to lane crossing. In step **4278**, the response system **199** determines if the time to lane crossing exceeds the road crossing threshold. If not, the response system **199** proceeds back to step **4270**. Otherwise, the response system **199** proceeds to step **4280** where a warning indicator is illuminated indicating that the vehicle is crossing a lane. In other cases, audible or haptic warnings could also be provided. If the vehicle continues exiting the lane a steering effort correction may be applied in step **4282**.

FIG. **61** illustrates an embodiment of a process for setting the road crossing threshold. In step **4290**, the response system **199** determines a minimum reaction time for vehicle recovery. In some cases, the minimum reaction time is associated with the minimum amount of time for a vehicle to avoid a lane crossing once a driver becomes aware of the potential lane crossing. In step **4292**, the response system **199** may receive vehicle operating information. Vehicle operating information could include roadway information as well as information related to the location of the vehicle within the roadway.

In step **4294**, the response system **199** determines an initial threshold setting from the minimum reaction time and the vehicle operating information. In step **4296**, the response system **199** determines the body index state of the driver. In step **4298**, the response system **199** determines a lane departure warning coefficient according to the body state index. An exemplary look-up table **4285** includes a range of coefficient values between 0% and 25% as a function of the body state index. Finally, in step **4299**, the response system **199** may set the road crossing threshold according to the lane departure warning coefficient and the initial threshold setting.

In addition to providing earlier warnings to a driver through a lane departure warning system, the response system **199** can also modify the operation of a lane keep assist system, which may also provide warnings as well as driving assistance in order to maintain a vehicle in a predetermined lane.

FIG. **62** illustrates an embodiment of a process of operating a lane keep assist system in response to driver behavior. In particular, FIG. **62** illustrates a method where the operation of a lane keep assist system is modified in response to the body state index of a driver. In step **4230**, the response system **199** may receive operating information. For example, in some cases the response system **199** may receive roadway information related to the size and/or shape of a roadway, as well as the location of various lines on the roadway. In step **4232**, the response system **199** determines the location of the road center and the width of the road. This can be determined using sensed information, such as optical information of the roadway, stored information including map based information, or a combination of sensed and stored information. In step **4234**, the response system **199** may determine the vehicle position relative to the road.

In step **4236**, the response system **199** may determine the deviation of the vehicle path from the road center. In step **4238**, the response system **199** may learn the driver's centering habits. For example, alert drivers generally adjust the steering wheel constantly in attempt to maintain the car in the center of a lane. In some cases, the centering habits of a driver can be detected by the response system **199** and learned. Any machine learning method or pattern recognition algorithm could be used to determine the driver's centering habits.

In step **4240**, the response system **199** may determine if the vehicle is deviating from the center of the road. If not, the response system **199** proceeds back to step **4230**. If the vehicle is deviating, the response system **199** proceeds to step **4242**. In step **4242**, the response system **199** may determine the body state index of the driver. Next, in step **4244**, the response system **199** may set the lane keep assist status using the body state index. For example, a look-up table **4260** is an example of a relationship between body state index and lane keep assist status. In particular, the lane keep assist status is set to a standard state for low body state index (indexes 1 or 2) and is set to a low state for a higher body state index (indexes 3 or 4). In other embodiments, any other relationship between body state index and lane keep assist status can be used.

In step **4246**, the response system **199** may check the lane keep assist status. If the lane keep assist status is standard, the response system **199** proceeds to step **4248** where standard steering effort corrections are applied to help maintain the vehicle in the lane. If, however, the response system **199** determines that the lane keep assist status is low in step **4246**, the response system **199** may proceed to step **4250**. In step **4250**, the response system **199** determines if the road is curved. If not, the response system **199** proceeds to step **4256** to illuminate a lane keep assist warning so the driver knows the vehicle is deviating from the lane. If, in step **4250**, the response system **199** determines the road is curved, the response system **199** proceeds to step **4252**. In step **4252**, the response system **199** determines if the driver's hands are on the steering wheel. If so, the response system **199** proceeds to step **4254** where the process ends. Otherwise, the response system **199** proceeds to step **4256**.

This arrangement allows the response system **199** to modify the operation of the lane keep assist system in response to driver behavior. In particular, the lane keep assist system may only help steer the vehicle automatically when the driver state is alert (low body state index). Otherwise, if the driver is drowsy or very drowsy (higher body state index), the response system **199** may control the lane keep assist system to only provide warnings of lane deviation without providing steering assistance. This may help increase the alertness of the driver when he or she is drowsy.

A response system can include provisions for modifying the control of a blind spot indicator system when a driver is drowsy. For example, in some cases, a response system could increase the detection area. In other cases, the response system could control the monitoring system to deliver warnings earlier (i.e., when an approaching vehicle is further away).

FIGS. **63** and **64** illustrate schematic views of an embodiment of the operation of a blind spot indicator system. In this embodiment, the motor vehicle **100** is traveling on roadway **4320**. The blind spot indicator system **242** (see FIG. **2**) may be used to monitor any objects traveling within a blind spot monitoring zone **4322**. For example, in the current embodiment, the blind spot indicator system **242** may determine that no object is inside of the blind spot monitoring zone **4322**. In particular, a target vehicle **4324** is just outside of the blind spot monitoring zone **4322**. In this case, no alert is sent to the driver.

In FIG. **63**, a driver **4330** is shown as fully alert. In this alert state, the blind spot monitoring zone is set according to predetermined settings and/or vehicle operating information. However, as seen in FIG. **64**, as the driver **4330** becomes drowsy, the response system **199** may modify the operation of the blind spot indicator system **242**. For example, in one embodiment, the response system **199** may increase the size of the blind spot monitoring zone **4322**. As seen in FIG. **64**, under these modified conditions the target vehicle **4324** is now traveling inside of the blind spot monitoring zone **4322**. Therefore, in this situation the driver **4330** is alerted to the presence of the target vehicle **4324**.

FIG. **65** illustrates an embodiment of a process of operating a blind spot indicator system in response to driver behavior. In some embodiments, some of the following steps could be accomplished by a response system **199** of a motor vehicle. In some cases, some of the following steps may be accomplished by an ECU **150** of a motor vehicle. In other embodiments, some of the following steps could be accomplished by other components of a motor vehicle, such as vehicle systems **172**. In still other embodiments, some of the following steps could be accomplished by any combination of systems or components of the vehicle. It will be understood that in some embodiments one or more of the following steps may be optional. For purposes of reference, the following method discusses components shown in FIGS. **1** through **3**, including the response system **199**.

In step **4302**, the response system **199** may receive drowsiness information. In step **4304**, the response system **199** determines if the driver is drowsy. If the driver is not drowsy, the response system **199** returns back to step **4302**. If the driver is drowsy, the response system **199** proceeds to step **4306**. In step **4306**, response system **4306** may increase the blind spot detection area. For example, if the initial blind spot detection area is associated with the region of the vehicle between the passenger side mirror about 3-5 meters behind the rear bumper, the modified blind spot detection area may be associated with the region of the vehicle between the passenger side mirror and about 4-7 meters behind the rear bumper. Following this, in step **4308**, the response system **199** may modify the operation of the blind spot indicator system **242** so that the system warns a driver when a vehicle is further away. In other words, if the system initially warns a driver if the approaching vehicle is within 5 meters of the motor vehicle **100**, or the blind spot, the system may be modified to warn the driver when the approaching vehicle is within 10 meters of the motor vehicle **100**, or the blind spot of the motor vehicle **100**. Of course, it will be understood that in some cases, step **4306** or step **4308** may be optional steps. In addition, other sizes and locations of the blind spot zone are possible.

FIG. **66** illustrates an embodiment of a process of operating a blind spot indicator system in response to driver behavior as a function of the body state index of the driver. In step **4418**, the response system **199** receives object information. This information can include information from one or more sensors capable of detecting the location of various objects (including other vehicles) within the vicinity of the vehicle. In some cases, for example, the response system **199** receives information from a remote sensing device (such as a camera, lidar or radar) for detecting the presence of one or more objects.

In step **4420**, the response system **199** may determine the location and/or bearing of a tracked object. In step **4422**, the response system **199** sets a zone threshold. The zone threshold may be a location threshold for determining when an object has entered into a blind spot monitoring zone. In some cases, the zone threshold may be determined using the body state index of the driver as well as information about the tracked object.

In step **4424**, the response system **199** determines if the tracked object crosses the zone threshold. If not, the response system **199** proceeds to step **4418**. Otherwise, the response system **199** proceeds to step **4426**. In step **4426**, the response system **199** determines if the relative speed of the object is in a predetermined range. If the relative speed of the object is in the predetermined range, it is likely to stay in the blind spot monitoring zone for a long time and may pose a very high threat. The response system **199** may ignore objects with a relative speed outside the predetermined range, since the object is not likely to stay in the blind spot monitoring zone for very long. If the relative speed is not in the predetermined range, the response system **199** proceeds back to step **4418**. Otherwise, the response system **199** proceeds to step **4428**.

In step **4428**, the response system **199** determines a warning type using the body state index. In step **4430**, the response system **199** sets the warning intensity and frequency using the body state index. Lookup table **4440** is an example of a relationship between body state index and a coefficient for warning intensity. Finally, in step **4432**, the response system **199** activates the blind spot indicator warning to alert the driver of the presence of the object in the blind spot.

FIG. **67** illustrates an embodiment of a process for determining a zone threshold. In step **4450**, the response system **199** retrieves tracked object information. In step **4452**, the response system **199** may determine an initial threshold setting. In step **4454**, the response system **199** may determine the body state index of the driver. In step **4456**, the response system **199** may determine a blind spot zone coefficient. For example, a look-up table **4460** includes a predetermined relationship between body state index and the blind spot zone coefficient. The blind spot zone coefficient may range between 0% and 25% in some cases and may generally increase with the body state index. Finally, in step **4458**, the response system **199** may determine the zone threshold.

Generally, the zone threshold can be determined using the initial threshold setting (determined in step **4452**) and the blind spot zone coefficient. For example, if the blind spot zone coefficient has a value of 25%, the zone threshold may be up to 25% larger than the initial threshold setting. In other cases, the zone threshold may be up to 25% smaller than the initial threshold setting. In other words, the zone threshold may be increased or decreased from the initial threshold setting in proportion to the value of the blind spot zone coefficient. Moreover, as the value of the zone threshold changes, the size

of the blind spot zone or blind spot detection area may change. For example, in some cases, as the value of the zone threshold increases, the length of the blind spot detection area is increased, resulting in a larger detection area and higher system sensitivity. Likewise, in some cases, as the value of the zone threshold decreases, the length of the blind spot detection area is decreased, resulting in a smaller detection area and lower system sensitivity.

FIG. **68** illustrates an example of an embodiment of various warning settings according to the body state index in the form of a lookup table **4470**. For example, when the driver's body state index is 1, the warning type may be set to indicator only. In other words, when the driver is not drowsy, the warning type may be set to light-up one or more warning indicators only. When the body state index is 2, both indicators and sounds may be used. When the driver's body state index is 3, indicators and haptic feedback may be used. For example, a dashboard light may flash and the driver's seat or the steering wheel may vibrate. When the driver's body state index is 4, indicators, sounds and haptic feedback may all be used. In other words, as the driver becomes more drowsy (increased body state index), a greater variety of warning types may be used simultaneously. It will be understood that the present embodiment only illustrates exemplary warning types for different body state indexes and in other embodiments any other configuration of warning types for body state indexes can be used.

FIGS. **69** through **72** illustrate exemplary embodiments of the operation of a collision mitigation braking system (CMBS) in response to driver behavior. In some cases, a collision mitigation braking system could be used in combination with a forward collision warning system. In particular, in some cases, a collision mitigation braking system could generate forward collision warnings in combination with, or instead of, a forward collision warning system. Moreover, the collision mitigation braking system could be configured to further actuate various systems, including braking systems and electronic seatbelt pretensioning systems, in order to help avoid a collision. In other cases, however, a collision mitigation braking system and a forward collision warning system could be operated as independent systems. In the exemplary situations discussed below, a collision mitigation braking system is capable of warning a driver of a potential forward collision. However, in other cases, a forward collision warning could be provided by a separate forward collision warning system.

As seen in FIG. **69**, the motor vehicle **100** is driving behind target vehicle **4520**. In this situation, the motor vehicle **100** is traveling at approximately 60 mph, while a target vehicle **4520** is slowing to approximately 30 mph. At this point, the motor vehicle **100** and the target vehicle **4520** are separated by a distance D**1**. Because the driver is alert, however, the CMBS **236** determines that the distance D**1** is not small enough to require a forward collision warning. In contrast, when the driver is drowsy, as seen in FIG. **70**, the response system **199** may modify the operation of the CMBS **236** so that a warning **4530** is generated during a first warning stage of the CMBS **236**. In other words, the CMBS **236** becomes more sensitive when the driver is drowsy. Moreover, as discussed below, the level of sensitivity may vary in proportion to the degree of drowsiness (indicated by the body state index).

Referring now to FIG. **71**, the motor vehicle **100** continues to approach the target vehicle **4520**. At this point, the motor vehicle **100** and the target vehicle **4520** are separated by a distance D**2**. This distance is below the threshold for activating a forward collision warning **4802**. In some cases, the warning could be provided as a visual alert and/or an audible alert. However, because the driver is alert, the distance D**2** is not determined to be small enough to activate additional collision mitigation provisions, such as automatic braking and/or automatic seatbelt pretensioning. In contrast, when the driver is drowsy, as seen in FIG. **72**, the response system **199** may modify the operation of the CMBS **236** so that in addition to providing forward the collision warning **4802**, the CMBS **236** may also automatically pretension a seatbelt **4804**. Also, in some cases, the CMBS **236** may apply light braking **4806** to slow the motor vehicle **100**. In other cases, however, no braking may be applied at this point.

For purposes of illustration, the distance between vehicles is used as the threshold for determining if the response system **199** should issue a warning and/or apply other types of intervention. However, it will be understood that in some cases, the time to collision between vehicles may be used as the threshold for determining what actions the response system **199** may perform. In some cases, for example, using information about the velocities of the host and target vehicles as well as the relative distance between the vehicles can be used to estimate a time to collision. The response system **199** may determine if warnings and/or other operations should be performed according to the estimated time to collision.

FIG. **73** illustrates an embodiment of a process for operating a collision mitigation braking system in response to driver behavior. In step **4550**, the response system **199** may receive target vehicle information and host vehicle information. For example, in some cases the response system **199** may receive the speed, location and/or bearing of the target vehicle as well as the host vehicle. In step **4552**, the response system **199** may determine the location of an object in the sensing area, such as a target vehicle. In step **4554**, the response system **199** may determine the time to collision with the target vehicle.

In step **4556**, the response system **199** may set a first time to collision threshold and a second time to collision threshold. In some cases, the first time to collision threshold may be greater than the second time to collision threshold. However, in other cases, the first time to collision threshold may be less than or equal to the second time to collision threshold. Details for determining the first time to collision threshold and the second time to collision threshold are discussed below and shown in FIG. **74**.

In step **4558**, the response system **199** may determine if the time to collision is less than the first time to collision threshold. If not, the response system **199** returns to step **4550**. In some cases, the first time to collision threshold may a value above which there is no immediate threat of a collision. If the time to collision is less than the first time to collision threshold, the response system **199** proceeds to step **4560**.

At step **4560**, the response system **199** may determine if the time to collision is less than the second time to collision threshold. If not, the response system **199** enters a first warning stage at step **4562**. The response system **199** may then proceed through further steps discussed below and shown in FIG. **75**. If the time to collision is greater than the second time to collision threshold, the response system **199** may enter a second warning stage at step **4564**. The response system **199** may then proceed through further steps discussed below and shown in FIG. **76**.

FIG. **74** illustrates an embodiment of a process for setting a first time to collision threshold and a second time to collision threshold. In step **4580**, the response system **199** may determine a minimum reaction time for avoiding a collision. In step **4582**, the response system **199** may receive target and host vehicle information such as location, relative speeds, absolute speeds as well as any other information. In step

4584, the response system 199 may determine a first initial threshold setting and a second initial threshold setting. In some cases, the first initial threshold setting corresponds to the threshold setting for warning a driver. In some cases, the second initial threshold setting corresponds to the threshold setting for warning a driver and also operating braking and/or seatbelt pretensioning. In some cases, these initial threshold settings may function as default setting that may be used with a driver is fully alert. Next, in step 4586, the response system 199 may determine the body state index of the driver.

In step 4588, the response system 199 may determine a time to collision coefficient. In some cases, the time to collision coefficient can be determined using look-up table 4592, which relates the time to collision coefficient to the body state index of the driver. In some cases, the time to collision coefficient increases from 0% to 25% as the body state index increases. In step 4590, the response system 199 may set the first time to collision threshold and the second time to collision threshold. Although a single time to collision coefficient is used in this embodiment, the first time to collision threshold and the second time to collision threshold may differ according to the first initial threshold setting and the second initial threshold setting, respectively. Using this configuration, in some cases, the first time to collision threshold and the second time to collision threshold may be decreased as the body state index of a driver increases. This allows the response system 199 to provide earlier warnings of potential hazards when a driver is drowsy. Moreover, the timing of the warnings varies in proportion to the body state index.

FIG. 75 illustrates an embodiment of a process for operating a motor vehicle in a first warning stage of the CMBS 236. In step 4702, the response system 199 may select visual and/or audible warnings for alerting a driver of a potential forward collision. In some cases, a warning light may be used. In other cases, an audible noise, such as a beep, could be used. In still other cases, both a warning light and a beep could be used.

In step 4704, the response system 199 may set the warning frequency and intensity. This may be determined using the body state index in some cases. In particular, as the driver state increases due to the increased drowsiness of the driver, the warning state frequency and intensity can be increased. For example, in some cases a look-up table 4570 can be used to determine the warning frequency and intensity. In particular, in some cases as the warning intensity coefficient increases (as a function of body state index), the intensity of any warning can be increased by up to 25%. In step 4706, the response system 199 may apply a warning for forward collision awareness. In some cases, the intensity of the warning can be increased for situations where the warning intensity coefficient is large. For example, for a low warning intensity coefficient (0%) the warning intensity may be set to a predetermined level. For higher warning intensity coefficients (greater than 0%) the warning intensity may be increased beyond the predetermined level. In some cases, the luminosity of visual indicators can be increased. In other cases, the volume of audible warnings can be increased. In still other cases, the pattern of illuminating a visual indicator or making an audible warning could be varied.

FIG. 76 illustrates an embodiment of process of operating a motor vehicle in a second stage of the CMBS 236. In some cases, during step 4718, the CMBS 236 may use visual and/or audible warnings to alert a driver of a potential collision. In some cases, the level and/or intensity of the warnings could be set according to the driver state index, as discussed above and shown in step 4704 of FIG. 75. Next, in step 4720, the response system 199 may use a haptic warning. In situations where visual and/or audible warnings are also used, the haptic warning can be provided simultaneously with the visual and/or audible warnings. In step 4722, the response system 199 may set the warning frequency and intensity of the haptic warning. This may be achieved using look-up table 4570, for example. Next, in step 4724, the response system 199 may automatically pretension a seatbelt in order to warn the driver. The frequency and intensity of the tensioning may vary as determined in step 4722. In step 4726, the response system 199 may apply light braking automatically in order to slow the vehicle. In some cases, step 4726 may be optional step.

FIG. 77 illustrates an embodiment of a process of operating a navigation system in response to driver behavior. In some embodiments, some of the following steps could be accomplished by a response system 199 of a motor vehicle. In some cases, some of the following steps may be accomplished by an ECU 150 of a motor vehicle. In other embodiments, some of the following steps could be accomplished by other components of a motor vehicle, such as vehicle systems 172. In still other embodiments, some of the following steps could be accomplished by any combination of systems or components of the vehicle. It will be understood that in some embodiments one or more of the following steps may be optional. For purposes of reference, the following method discusses components shown in FIGS. 1 through 3, including the response system 199.

In step 4602, the response system 199 may receive drowsiness information. In step 4604, the response system 199 may determine if the driver is drowsy. If the driver is not drowsy, the response system 199 proceeds back to step 4602. Otherwise, the response system 199 proceeds to step 4606. In step 4606, the response system 199 may turn off navigation system 4606. This may help reduce driver distraction.

Operational Response and Intra-Vehicle Communication of One or More Vehicle Systems

It will be understood that in some embodiments, multiple vehicle systems could be modified according to driver behavior substantially simultaneously. For example, in some cases when a driver is drowsy, a response system could modify the operation of a collision warning system and a lane keep assist system to alert a driver earlier of any potential collision threats or unintentional lane departures. Likewise, in some cases when a driver is drowsy, a response system could automatically modify the operation of an antilock brake system and a brake assist system to increase braking response. The number of vehicle systems that can be simultaneously activated in response to driver behavior is not limited.

It will be understood that the current embodiment illustrates and discusses provisions for sensing driver behavior and modifying the operation of one or more vehicle systems accordingly. However, these methods are not limited to use with a driver. In other embodiments, these same methods could be applied to any occupant of a vehicle. In other words, a response system may be configured to detect if various other occupants of a motor vehicle are drowsy. Moreover, in some cases, one or more vehicle systems could be modified accordingly.

A vehicle can include provisions for modifying various different vehicle systems in response to driver behavior. For example, in some cases, one or more vehicle systems may be configured to communicate with one another in order to coordinate responses to a hazard or other driving condition. In some cases, a centralized control unit, such as an ECU, can be

configured to control various different vehicle systems in a coordinated manner to address hazards or other driving conditions.

For purposes of clarity, the term hazard, or hazardous condition, is used throughout this detailed description and in the claims to refer generally to one or more objects and/or driving scenarios that pose a potential safety threat to a vehicle. For example, a target vehicle traveling in the blind spot of a driver may be considered a hazard since there is some risk of collision between the target vehicle and the host vehicle should the driver turn into the lane of the target vehicle. Additionally, a target vehicle that is traveling in front of a host vehicle at a distance less than a safe headway distance may also be categorized as a hazard for purposes of operating a response system. Furthermore, the term hazard is not limited to describing a target vehicle or other remote object. In some cases, for example, the term hazard can be used to describe one or more hazardous driving conditions that increase the likelihood of an accident.

FIG. **78** illustrates a schematic view of an embodiment of a response system **5001**. The response system **5001** may include various vehicle systems that can be modified in response to driver behavior, including drowsy driving. Examples of different vehicle systems that may be incorporated into the response system **5001** include any of the vehicle systems described above and shown in FIG. **2** as well as any other vehicle systems. It should be understood that the systems shown in FIG. **2** are only intended to be exemplary and in some cases some other additional systems may be included. In other cases, some of the systems may be optional and not included in all embodiments.

In some embodiments, the response system **5001** includes the electronic stability control system **222**, the antilock brake system **224**, the brake assist system **226**, the automatic brake prefill system **228**, the low speed follow system **230**, the cruise control system **232**, the collision warning system **234**, the collision mitigation braking system **236**, the auto cruise control system **238**, the lane departure warning system **240**, the blind spot indicator system **242**, the lane keep assist system **244**, the navigation system **248**, the electronic power steering system **160**, the visual devices **166**, the climate control system **250**, the audio devices **168**, the electronic pretensioning system **254** and the tactile devices **170**, which are referred to collectively as the vehicle systems **172**. In other embodiments, the response system **5001** can include additional vehicle systems. In still other embodiments, some of the systems included in FIG. **78** may be optional. Moreover, in some cases, the response system **5001** may be further associated with various kinds of monitoring devices including any of the monitoring devices discussed above (for example, optical devices, various types of position sensors, autonomic monitoring devices or systems, as well as any other devices or systems).

The response system **5001** may also provisions for centralized control of, and/or communication between, various vehicle systems. In some cases, the response system **5001** can include a centralized control unit, such as an electronic control unit (ECU). In one embodiment, the response system **5001** includes central ECU **5000**, or simply ECU **5000**. The ECU **5000** may include a microprocessor, RAM, ROM, and software all serving to monitor and supervise components of the response system **5001** as well as any other components of a motor vehicle. The output of various devices is sent to the ECU **5000** where the device signals may be stored in an electronic storage, such as RAM. Both current and electronically stored signals may be processed by a central processing unit (CPU) in accordance with software stored in an electronic memory, such as ROM.

The ECU **5000** may include a number of ports that facilitate the input and output of information and power. The term "port" as used throughout this detailed description and in the claims refers to any interface or shared boundary between two conductors. In some cases, ports can facilitate the insertion and removal of conductors. Examples of these types of ports include mechanical connectors. In other cases, ports are interfaces that generally do not provide easy insertion or removal. Examples of these types of ports include soldering or electron traces on circuit boards.

All of the following ports and provisions associated with the ECU **5000** are optional. Some embodiments may include a given port or provision, while others may exclude it. The following description discloses many of the possible ports and provisions that can be used, however, it should be kept in mind that not every port or provision must be used or included in a given embodiment.

In some cases, the ECU **5000** can include a port **5002**, a port **5004**, a port **5006** and a port **5008** for transmitting signals to and/or receiving signals from the electronic stability control system **222**, the anti-lock brake system **224**, the brake assist system **226** and the automatic brake prefill system **228**, respectively. In some cases, the ECU **5000** can include a port **5010**, a port **5012**, a port **5014**, a port **5016**, a port **5018**, a port **5020**, a port **5022** and a port **5024** for transmitting signals to and/or receiving signals from the low speed follow system **230**, the cruise control system **232**, the collision warning system **234**, the collision mitigation braking system **236**, the auto cruise control system **238**, the lane departure warning system **240**, the blind spot indicator system **242** and the lane keep assist system **244**, respectively. In some cases, the ECU **5000** can include a port **5026**, a port **5028**, a port **5030**, a port **5032**, a port **5034**, a port **5036** and a port **5038** for transmitting signals to and/or receiving signals from the navigation system **248**, the electronic power steering system **160**, the visual devices **166**, the climate control system **250**, the audio devices **168**, the electronic pretensioning system **254** and the tactile devices **170**, respectively.

In some embodiments, the ECU **5000** may be configured to control one or more of vehicle systems **172**. For example, the ECU **5000** could receive output from one or more vehicle systems **172**, make control decisions, and provide instructions to one or more vehicle systems **172**. In such cases, the ECU **5000** may function as a central control unit. In other cases, however, the ECU **5000** could simply act as a relay for communication between two or more of vehicle systems **172**. In other words, in some cases, the ECU **5000** could passively transmit messages between two or more of vehicle systems **172** without making any control decisions.

FIG. **79** illustrates an embodiment of a process for controlling one or more vehicle systems in a motor vehicle. In some embodiments, some of the following steps could be accomplished by a response system **5001** of a motor vehicle. In some cases, some of the following steps may be accomplished by an ECU **5000** of a motor vehicle. In other embodiments, some of the following steps could be accomplished by other components of a motor vehicle, such as vehicle systems **172**. In still other embodiments, some of the following steps could be accomplished by any combination of systems or components of the vehicle. It will be understood that in some embodiments one or more of the following steps may be optional. For purposes of reference, the following method discusses components shown in FIG. **78**, including the response system **5001**.

In step **6020**, the ECU **5000** may communicate with one or more of vehicle systems **172**. In some cases, the ECU **5000** may receive various kinds of information from vehicle systems **172** related to driving conditions, vehicle operating conditions, target vehicle or target object information, hazard information, as well as any other information. In some cases, each system of vehicle systems **172** may transmit different kinds of information since each system may utilize different kinds of information while operating. For example, the cruise control system **232** may provide the ECU **5000** with information related to a current vehicle speed. However, the electronic power steering system **160** may not monitor vehicle speed and therefore may not transmit vehicle speed information to the ECU **5000**. In some cases, some systems may send overlapping information. For example, the multiple systems of vehicle systems **172** may transmit information gathered from remote sensing devices. Therefore, it will be understood that information received by the ECU **5000** from a particular vehicle system may or may not be unique relative to information received from other systems of vehicle systems **172**.

In some cases, the ECU **5000** can receive driver behavior information (such as a level of drowsiness as characterized using a body state index). In some cases, driver behavior information could be received directly from vehicle systems **172**. In other cases, driver behavior information could be received from monitoring devices or systems as discussed above.

In step **6022**, the ECU **5000** may evaluate potential hazards. In some cases, one or more vehicle systems **172** may transmit hazard information to ECU **5000** that may characterize a given target vehicle, object or driving situation as a hazard. In other cases, the ECU **5000** may interpret data provided by one or more vehicle systems **172** to determine if there are any potential hazards. In other words, the characterization of a vehicle, object or driving situation as a hazard can be accomplished within an individual vehicle system of vehicle systems **172** and/or by the ECU **5000**. In some cases, a target vehicle, object or driving situation may be considered a hazard by one system but not another. For example, information about a target vehicle traveling beside the host vehicle may be used by the blind spot indicator system **242** to categorize the target vehicle as a hazard, but using the same information the low speed follow system **230** may not categorize the target vehicle as a hazard, since the low speed follow system **230** is primarily concerned with other vehicles located in front of the host vehicle.

In situations where the ECU **5000** determines that a potential hazard exists, the ECU **5000** may decide to modify the control of one or more vehicle systems **172** in response to the potential hazard at step **6024**. In some cases, the ECU **5000** may modify the control of one vehicle system. In other cases, the ECU **5000** may modify the control of two or more vehicle systems substantially simultaneously. In some cases, the ECU **5000** may coordinate the modified operation of two or more vehicle systems in order to enhance the response of a vehicle to a potential hazard. For example, simultaneously modifying the operation of vehicle systems that passively warn a driver of hazards and vehicle systems that actively change some parameter of vehicle operation (such as speed, braking levels, deactivating cruise control, etc.) according to driver behavior may provide a more robust response to hazards. This configuration allows the ECU **5000** to provide responses that supply just the right level of assistance depending on the state of the driver.

In some embodiments, the ECU **5000** may maintain full control over all vehicle systems **172**. In other embodiments, however, some vehicle systems **172** may operate independently with some input or control from the ECU **5000**. In such cases, the ECU **5000** may receive information from systems that are already in a modified control mode, and may subsequently modify the operation of additional vehicle systems to provide a coordinated response to a potential hazard. Moreover, by analyzing the response of some vehicle systems, ECU **5000** can override automatic control of other vehicle systems in response to a hazard. For example if a first vehicle system detects a hazard, but a second vehicle system does not, the ECU **5000** can instruct the second vehicle system to behave as though a hazard is present.

In embodiments where the ECU **5000** acts in a passive manner, ECU **5000** may function to receive hazard warnings from one vehicle system and transmit the hazard warnings to one or more additional vehicle systems **172**. With this configuration, the ECU **5000** may distribute hazard warnings between two or more of the vehicle systems **172** to enhance the operation of the response system **5001**.

FIGS. **80-81** illustrate other embodiments of processes for controlling one or more vehicle systems in a motor vehicle. In some embodiments, some of the following steps could be accomplished by a response system **5001** of the motor vehicle **101**. In some cases, some of the following steps may be accomplished by an ECU **5000** of a motor vehicle. In other embodiments, some of the following steps could be accomplished by other components of a motor vehicle, such as vehicle systems **172**. In still other embodiments, some of the following steps could be accomplished by any combination of systems or components of the vehicle. It will be understood that in some embodiments one or more of the following steps may be optional. For purposes of reference, the following method discusses components shown in FIG. **78**, including the response system **5001**.

In step **6032**, the ECU **5000** may receive information from one or more of vehicle systems **172**. This information can include sensed information as well as information characterizing the operation of vehicle systems **172**. For example, in some cases, the ECU **5000** could receive information from electronic stability control system **222** including wheel speed information, acceleration information, yaw rate information as well as other kinds of sensed information utilized by electronic stability control system **222**. Additionally, in some cases, the ECU **5000** could receive information related to the operating state of electronic stability control system **222**. As an example, the ECU **5000** could receive information indicating that the electronic stability control system **222** is actively facilitating control of the vehicle by actuating one or more wheel brakes.

In some embodiments, the ECU **5000** may optionally receive driver behavior information from one or more of the vehicle systems **172** during step **6032**. For example, one or more of the vehicle systems **172** may determine a body state index for a driver. In some cases, multiple different systems may send the ECU **5000** a body state index or other driver behavior information. In other embodiments, the ECU **5000** can receive driver behavior information directly from one or more monitoring devices rather than receiving driver behavior information from one of vehicle systems **172**. In such cases, the ECU **5000** may be configured to determine a body state index according to the monitoring information. In still other embodiments, driver behavior information can be received from the vehicle systems **172** as well as independently from one or more monitoring devices.

In step **6034**, the ECU **5000** may detect a potential hazard. In some embodiments, a hazard can be detected through information provided by one or more vehicle systems **172**. As an example, the ECU **5000** may receive information from the

blind spot indicator system **242** indicating that a target vehicle is traveling in the blind spot of the host vehicle. In this situation, the ECU **5000** may identify the target vehicle as a potential hazard. As another example, the ECU **5000** could receive information from collision warning system **234** indicating that a target vehicle may be traveling through an intersection approximately simultaneously with the host vehicle. In this situation, the ECU **5000** may identify the target vehicle as a potential hazard. It will be understood that a target vehicle or object could be designated as a potential hazard by one or more of vehicle systems **172** or by the ECU **5000**. In other words, in some cases, a vehicle system determines that an object is a potential hazard and sends this information to the ECU **5000**. In other cases, the ECU **5000** receives information about a target object from a vehicle system and determines if the object should be identified as a potential hazard.

After identifying a potential hazard, in step **6036**, the ECU **5000** may determine a risk level for the potential hazard. In other words, in step **6036**, the ECU **5000** determines how much of a risk a potential hazard poses. This step allows the ECU **5000** to make control decisions about potential hazards that pose the greatest risk and may reduce the likelihood of the ECU **5000** modifying operation of one or more vehicle systems in response to a target vehicle, object or driving situation that does not pose much of a risk to a vehicle. Details of a method of determining a risk level for a potential hazard are discussed below and shown in FIG. **81**, which provides several possible sub-steps associated with step **6036**.

The risk level determined in step **6036** could be characterized in any manner. In some cases, the risk level could be characterized by a range of numeric values (for example, 1 to 10, with 1 being the lowest risk and 10 being the highest risk). In some cases, the risk level could be characterized as either "high risk" or "low risk". In still other cases, the risk level could be characterized in any other manner.

In step **6038**, the ECU **5000** determines if the risk level associated with a potential hazard is high. In some cases, the ECU **5000** determines if the risk level is high based on a predetermined risk level. For example, in situations where a 1 to 10 risk level scale is used, the predetermined risk level could be 8, so that any hazard having a risk level at 8 or above is identified to have a high risk level. In other cases, the ECU **5000** could use any other method to determine if the risk level identified during step **6036** is high enough to require further action.

If the risk level is not high, the ECU **5000** returns to step **6032**. Otherwise, the ECU **5000** proceeds to step **6040**. In step **6040**, the ECU **5000** may select one or more of the vehicle systems **172** to be modified in response to a potential hazard. In some cases, the ECU **5000** could select a single vehicle system. In other cases, the ECU **5000** could select two or more vehicle systems. Moreover, as discussed in further detail below, the ECU **5000** may coordinate the operation of two different vehicle systems of the vehicle systems **172**, so that each system is modified in an appropriate manner to enhance the ability of a drowsy driver to maintain good control of a vehicle. This allows some systems to enhance the operation and control of other systems.

In step **6042**, the ECU **5000** may determine the type of modified control for each system selected in step **6040**. In some cases, the ECU **5000** may use the body state index of a driver to determine the control type. For example, as seen in FIG. **80**, the ECU **5000** may use the body state index determined in step **6050** to select a control type. An example of various control type settings according to the body state index is shown in the form of lookup table **6070**. For example, when the body state index is 1 or 2, the control type may be set to "no control". In these situations, the ECU **5000** may not adjust the operation of any of vehicle systems **172**. When the body state index of the driver is 3, which may indicate that the driver is somewhat drowsy, the ECU **5000** may set the control of one or more of the vehicle systems **172** to "partial control". In the partial control mode, the control of one or more vehicle systems **172** may be slightly modified to help enhance drivability. When the body state index of the driver is 4, which may indicate that the driver is very drowsy or even asleep, the ECU **5000** may set the control of one or more of the vehicle systems **172** to "full control". In the "full control" mode, the ECU **5000** may substantially modify the control of one or more of the vehicle systems **172**. Using this arrangement, a vehicle system may be configured to provide additional assistance to a driver when the driver is very drowsy, some assistance when the driver is somewhat drowsy, and little to no assistance when the driver is relatively alert (not drowsy). In step **6044**, the ECU **5000** may modify the control of one or more selected systems of the vehicle systems **172**. In some cases, a vehicle system may be controlled according to the control type determined during step **6042**.

FIG. **81** illustrates one embodiment of a process for determining the risk level for a potential hazard. It will be understood that this method is only intended to be exemplary and in other embodiments any other method could be used to evaluate the risk level for a potential hazard. In step **6102**, the ECU **5000** may determine the relative distance between the potential hazard and the host vehicle. In some cases, the ECU **5000** can determine the relative distance between the host vehicle and the hazard using a remote sensing device, including radar, lidar, cameras as well as any other remote sensing devices. In other cases, the ECU **5000** could use GPS information for the host vehicle and the hazard to calculate a relative distance. For example, the GPS position of the host vehicle can be received using a GPS receiver within the host vehicle. In situations where the hazard is another vehicle, GPS information for the hazard could be obtained using a vehicle communication network or other system for receiving remote vehicle information.

Next, in step **6104**, the ECU **5000** may determine the host vehicle trajectory relative to the hazard. In step **6106**, the ECU **5000** may determine the hazard trajectory relative to the host vehicle. In some cases, these trajectories can be estimated using remote sensing devices. In other cases, these trajectories can be estimated from real-time GPS position information. In still other cases, any other methods for determining trajectories for a host vehicle and a hazard (such as a remote vehicle) could be used.

By determining the relative distances as well as relative trajectories of the host vehicle and hazard, the ECU **5000** can determine the probability that the host vehicle will encounter the hazard. In particular, using the relative distance as well as trajectory information, the ECU **5000** can estimate the probability that the host vehicle and the hazard may eventually collide. In step **6108**, the ECU **5000** may determine the risk level for the hazard, which is an indicator of the likelihood that the host vehicle will encounter the hazard. In some cases, the ECU **5000** classifies the potential hazard as presenting a high risk or a low risk to the host vehicle.

A response system can include provisions for allowing different vehicle systems to communicate directly with one another. In some cases, one or more vehicle systems could be networked to one another. In some cases, one vehicle system can transmit information and/or instructions directly to another vehicle system in order to coordinate the operation of the vehicle systems in response to driver behavior.

FIG. **82** illustrates a schematic view of an embodiment of the first vehicle system **6202** and the second vehicle system **6204**, which are in communication via network **6206**. Generally, network **6206** may be any kind of network known in the art. Examples of different kinds of networks include, but are not limited to: local area networks, wide area networks, personal area networks, controller area networks as well as any other kinds of networks. In some cases, network **6206** may be a wired network. In other cases, network **6206** may be a wireless network.

For purposes of clarity, only two vehicle systems are shown connected to one another using a network. However, in other cases, any other number of vehicle systems could be connected using one or more networks. For example, in some embodiments, some or all of the vehicle systems **172**, shown in FIG. **78**, could be connected through a network. In such a situation, each vehicle system of the vehicle systems **172** may function as a node within the network. Moreover, using a networked configuration allows hazard information to be shared between each system of the vehicle systems **172**. In some cases, a vehicle system can be configured to control another vehicle system by transmitting instructions over a network.

FIG. **83** illustrates an embodiment of a process for controlling one or more vehicle systems in response to potential hazards in situations where the vehicle systems may be in direct communication with one another, such as through a network. In some cases, certain steps of the process are associated with a first vehicle system **6202** and certain steps are associated with a second vehicle system **6204**. In some cases, steps associated with the first vehicle system **6202** are performed by the first vehicle system **6202** and steps associated with the second vehicle system **6204** are performed by the second vehicle system **6204**. However, in other cases, some steps associated with the first vehicle system **6202** can be performed by the second vehicle system **6204** or some other resource. Likewise, in other cases, some steps associated with second vehicle system **6204** can be performed by the first vehicle system **6202** or some other resource. In still other embodiments, some of the following steps could be accomplished by any combination of systems or components of the vehicle. It will be understood that in some embodiments one or more of the following steps may be optional.

In step **6302**, the first vehicle system **6202** may receive operating information. This information can include any kind of information including sensed information as well as information characterizing the operation of vehicle systems **172**. In one embodiment, the first vehicle system **6202** receives operating information required for the normal operation of the first vehicle system **6202**. For example, in an embodiment where the first vehicle system **6202** is a blind spot indicator system **242**, the first vehicle system **6202** could receive information from a camera monitoring the blind spot region beside the vehicle, information about any tracked objects within or near the blind spot region, current vehicle speed, as well as any other information used to operate blind spot indicator system **242**.

In step **6304** the first vehicle system **6202** may determine the body state index of a driver. This information could be determined according to various monitoring information received from one or monitoring devices, such as cameras, position sensors (such as head position sensors) autonomic monitoring systems or any other devices. In some cases, the body state index could also be determined using information from a vehicle system. For example, a system could determine that a driver is drowsy by monitoring outputs from a lane departure warning system, as previously discussed.

In step **6306**, the first vehicle system **6202** may detect a potential hazard. In some embodiments, a hazard can be detected through information provided to the first vehicle system **6202**. For example, in the case where the first vehicle system **6202** is an auto cruise control system, the first vehicle system **6202** may be configured to receive headway distance information through a camera, lidar, radar or other remote sensing device. In such cases, the first vehicle system **6202** can detect remote objects, such as a vehicle, using similar remote sensing techniques. In other cases, a hazard can be detected through information provided by any other vehicle systems of the vehicle.

After identifying a potential hazard, in step **6308**, the first vehicle system **6202** may determine a risk level for the potential hazard. In other words, in step **6308**, the first vehicle system **6202** determines how much of a risk a potential hazard poses. This step allows the first vehicle system **6202** to make control decisions about potential hazards that pose the greatest risk and may reduce the likelihood that the operation of the first vehicle system **6202** will be modified in response to a target vehicle, object or driving situation that does not pose much of a risk to a vehicle. Details of a method of determining a risk level for a potential hazard have been discussed previously.

In step **6310**, the first vehicle system **6202** determines if the risk level associated with a potential hazard is high. In some cases, the first vehicle system **6202** determines if the risk level is high based on a predetermined risk level. For example, in situations where a 1 to 10 risk level scale is used, the predetermined risk level could be 8, so that any hazard having a risk level at 8 or above is identified to have a high risk level. In other cases, the first vehicle system **6202** could use any other method to determine if the risk level identified during step **6308** is high enough to require further action.

If the risk level is high, the first vehicle system **6202** proceeds to step **6312**. Otherwise, the first vehicle system **6202** returns to step **6302**. In step **6312**, the control of the first vehicle system **6202** may be modified according to the current body state index. In step **6314**, the first vehicle system **6202** determines if the second vehicle system **6204** should be informed of the potential hazard detected by the first vehicle system **6202**. In some cases, the second vehicle system **6204** may be informed of any hazards encountered by the first vehicle system **6202**. In other cases, however, one or more criteria could be used to determine if the second vehicle system **6204** should be notified of a potential hazard detected by the first vehicle system **6202**. In embodiments where multiple vehicle systems are in communication with one another, a vehicle system detecting a hazard could send information warning all the other vehicle systems of the hazard.

In step **6316**, the first vehicle system **6202** checks to see if the second vehicle system **6204** should be informed of the potential hazard. If second vehicle system should not be informed, the first vehicle system **6202** returns to step **6302**. Otherwise, the first vehicle system **6202** proceeds to step **6318** where information is submitted to the second vehicle system **6204**. In some cases, the submitted information includes a warning and/or instructions for the second vehicle system **6204** to check for a potential hazard.

In step **6320**, the second vehicle system **6204** receives information from the first vehicle system **6202**. This information can include information related to the potential hazard as well as any other information. In some instances, the information may include instructions or a request for the second vehicle system **6204** to check for any potential hazards. In some cases, the information can include operating information related to the first vehicle system **6202**. Next, in step

6322, the second vehicle system **6204** may retrieve operating information. This operating information could include any type of information used during the operation of the second vehicle system **6204**, as well as operating information from any other system or device of the motor vehicle.

In step **6324**, the second vehicle system **6204** may check for potential hazards as advised or instructed by the first vehicle system **6202**. Then, in step **6326**, the second vehicle system **6204** may determine the risk level for the potential hazard using methods similar to those used by the first vehicle system **6202** during step **6308**. In step **6328**, the second vehicle system **6204** may determine if the risk level is high. If not, the second vehicle system **6204** returns to step **6322**. Otherwise, the second vehicle system **6204** proceeds to step **6330**.

In step **6330**, the body state index of the driver may be determined. This can be determined using any of the methods described above. Moreover, in some cases, the body state index may be retrieved directly from the first vehicle system **6202**. In step **6332**, the control of second vehicle system **6332** is modified according to the body state index. This method may facilitate better system response to a hazard by coordinating the operation of multiple vehicle systems and modifying the operation of each system according to the body state index.

Exemplary Operational Response and Intra-Vehicle Communication of One or More Vehicle Systems

The following are examples of operational response and communication of one or more vehicle systems. It is to be appreciated that other vehicle systems (e.g., vehicle systems **172** of FIG. **1**) not discussed herein can be configured to communicate information (e.g., vehicle information, driver behavior) with one or more other vehicle systems and modify vehicle system parameters based on the information. Although driver behavior information is discussed with reference to drowsiness, it should be understood that any driver behavior could be assessed, including but not limited to drowsy behavior, distracted behavior, stressed behavior, impaired behavior and/or generally inattentive behavior.

FIGS. **84** through **87** illustrate schematic views of various operating modes of the blind spot indicator system **242** (FIG. **2**) and the electronic power steering system **160** (FIG. **2**). In this embodiment, the motor vehicle **100** is traveling on a roadway **6420**. The blind spot indicator system **242** may be used to monitor any objects traveling within a blind spot monitoring zone **6422**. For example, in the current embodiment, the blind spot indicator system **242** may determine that no object is inside of the blind spot monitoring zone **6422**. In particular, a target vehicle **6424** is just outside of the blind spot monitoring zone **6422**. In this case, no alert is sent to the driver.

In FIG. **85**, to change lanes, a driver **6430** may turn a wheel **6432**. In this situation, with a driver **6430** fully alert, the blind spot monitoring zone **6422** has a default size appropriate to the amount of awareness of an alert driver. Since the target vehicle **6424** is not inside the blind spot monitoring zone **6422**, no warnings are generated and the driver **6430** has complete freedom to steer the motor vehicle **100** into the adjacent lane.

Referring now to FIGS. **86** and **87**, as the driver **6430** becomes drowsy, as shown schematically in FIGS. **86** and **87**, the size of the blind spot monitoring zone **6422** is increased. At this point, the target vehicle **6424** is now in the enlarged monitoring zone **6422**, which results in a warning **6440** generated by the blind spot indicator system **242**. Moreover, as seen in FIG. **87**, to prevent the user from turning into the adjacent lane and potentially colliding with the target vehicle **6424**, the electronic power steering system **160** may generate a counter torque **6450** to prevent the driver **6430** from turning the wheel **6432**. This counter torque **6450** may be provided at a level to match the torque applied by the driver **6430**, in an opposing direction, so that the net torque on the wheel **6432** is approximately zero. This helps keep the motor vehicle **100** from entering the adjacent lane when a target vehicle is traveling in the blind spot of the driver **6430**. In some cases, the warning indicator **6460** may also be activated to inform a driver that vehicle control has been modified by one or more vehicle systems. Using this arrangement, the blind spot indicator system **242** and the electronic power steering system **160** may operate in a coordinated manner to warn a driver of a hazard and further control the vehicle to help avoid a potential collision.

FIG. **88** illustrates an embodiment of a process of operating a blind spot indicator system and an electronic power steering system in response to driver behavior. In some embodiments, some of the following steps could be accomplished by a response system **5001** of a motor vehicle. In some cases, some of the following steps may be accomplished by an ECU **5000** of a motor vehicle. In other embodiments, some of the following steps could be accomplished by other components of a motor vehicle, such as vehicle systems **172**. In still other embodiments, some of the following steps could be accomplished by any combination of systems or components of the vehicle. It will be understood that in some embodiments one or more of the following steps may be optional. For purposes of reference, the following method discusses components shown in FIG. **78**.

In step **6502**, the ECU **5000** may receive object information. The object could be a vehicle or any other object that can be tracked. In some cases, for example, the object could be pedestrian or biker. In step **6504**, ECU **5000** may detect a potential hazard. Next, in step **6506**, the ECU **5000** may determine if the object poses a hazard. A method of determining if an object poses a hazard for a vehicle has been discussed above and shown in FIGS. **66** and **67**. In particular, step **4420**, step **4422**, step **4424** and step **4426** of FIG. **66** as well as each of the steps shown in FIG. **67**, provide an exemplary method to determine if the object poses a hazard. In some cases, the step of determining if the object poses a hazard includes checking the body state index of a driver as discussed and shown in FIGS. **66** and **67**.

In step **6508**, the ECU **5000** may determine the warning type, frequency and intensity of an alert to warn the driver. In some cases, determining the warning type, frequency and intensity may proceed in a similar manner to step **4428** and step **4430** of FIG. **66**. Next, the ECU **5000** may activate a blind sport warning indicator in step **6510**, to alert a driver of a potential hazard.

In step **6512**, the ECU **5000** determines if the object is still inside the blind spot monitoring zone. This step allows for the possibility that a driver has observed the blind spot warning indicator and adjusted the vehicle so that there is no long an object in the blind spot.

If there is no longer an object in the blind spot monitoring zone, ECU **5000** may return to step **6502**. Otherwise, the ECU **5000** may proceed to step **6514**. In step **6514**, the ECU **5000** determines the trajectory of the tracked object. The trajectory of the object can be determined using any methods including remote sensing as well as GPS based methods.

In step **6516**, the ECU **5000** determines the relative distance between the motor vehicle and the tracked object. In step **6518**, the ECU **5000** determines if a crash is likely

between the vehicle and the tracked object. If not, the ECU **5000** returns to step **6512** to continue monitoring the tracked object. Otherwise, the ECU **5000** proceeds to step **6520** to determine the type of power steering control to be used to help prevent the driver from changing lanes.

In parallel with step **6520**, the ECU **5000** may determine body state index **6526** and use look-up table **6528** to select the appropriate type of control. For example, if the body state index is 1 or 2, meaning the driver is relatively alert, no control is performed since it is assumed a driver will be aware of the potential threat posed by the object. If the body state index has a value of 3, meaning the driver is somewhat drowsy, some partial steering feedback is provided to help resist any attempt by the user to turn the vehicle into the adjacent lane with the tracked object. If the body state index has a value of 4, meaning the driver is very drowsy, full steering feedback is provided to substantially prevent the driver from moving into the adjacent lane.

After the power steering control type has been selected, the ECU **5000** may control the power steering system accordingly in step **6522**. In some cases, at step **6524**, the ECU **5000** may also activate a control warning to alert the driver that one or more vehicle systems are assisting with vehicle control.

FIG. **89** illustrates a schematic view of a further operating mode of the blind spot indicator system **242** and a brake control system. It should be understood that the brake control system can be any vehicle system with braking functions controlled by the ECU **5000**. For example, the brake control system can include, but is not limited to, an electronic stability control system **222**, an anti lock brake system **224**, a brake assist system **226**, an automatic brake prefill system **228**, a low speed follow system **230**, a collision warning system **234**, a collision mitigation braking system **236** or an auto cruise control system **238**.

In the illustrated embodiment, the blind spot indicator system **242** includes provisions for cross-traffic alert, as is known in the art, that detects objects in the blind spot during normal driving, objects approaching from the sides of the vehicle (i.e., cross traffic) when the vehicle is moving forward or reverse direction. For exemplary purposes, FIGS. **89** and **90** will be described with reference to cross traffic when the vehicle is in a reverse gear (i.e., when reversing out of a parking spot). However, it is appreciated that the systems and methods described herein can also be applicable to cross traffic when the vehicle is moving in a forward direction.

Referring now to FIG. **89**, the motor vehicle **100** is illustrated in a parking situation **7420** where the blind spot indicator system **242** and the brake control system, alone or in combination, can be used to improve a cross-traffic alert process. The blind spot monitoring system **242** is used to monitor any objects, for example, a target vehicle **7424** and/or a target vehicle **7426**, traveling (i.e., approaching from the sides of the vehicle **100**) within a blind spot monitoring zone **7422**. As discussed above, it is understood that the blind spot monitoring zone **7422** can also be located in front of the vehicle **100** for monitoring objects approaching from the sides of the vehicle **100** when the vehicle **100** in a forward direction. It is appreciated that the blind spot indicator system **242** can also include the functions described above with respect to FIGS. **84-87**. For example, the blind spot monitoring zone **7422** can increase or decrease in size based on the amount of awareness of a driver of the vehicle **100**. Moreover, it is appreciated that the vehicle **100** may be traveling in reverse or forward at an angle (e.g., a parking angle) rather than a 90 degree angle as shown in FIG. **89**.

FIG. **90** illustrates an embodiment of a process of operating a blind spot indicator system including cross-traffic alert with a brake control system. In some embodiments, some of the following steps could be accomplished by a response system **5001** of a motor vehicle. In some cases, some of the following steps may be accomplished by an ECU **5000** of a motor vehicle. In other embodiments, some of the following steps could be accomplished by other components of a motor vehicle, such as vehicle systems **172**. In still other embodiments, some of the following steps could be accomplished by any combination of systems or components of the vehicle. It will be understood that in some embodiments one or more of the following steps may be optional. For purposes of reference, the following method discusses components shown in FIG. **78**.

In step **7502**, the ECU **5000** may receive object information. The object could be a vehicle or any other object that can be tracked. In some cases, for example, the object could also be pedestrian or biker. With regards to a cross-traffic alert system, the object may be a vehicle (i.e., vehicles **7424**, **7426**) in the potential path of a vehicle put in reverse gear. In step **7504**, ECU **5000** may detect a potential hazard. Next, in step **7506**, the ECU **5000** may determine if the object poses a hazard. A method of determining if an object poses a hazard for a vehicle has been discussed above and shown in FIGS. **66** and **67**. In particular, step **4420**, step **4422**, step **4424** and step **4426** of FIG. **66** as well as each of the steps shown in FIG. **67**, provide an exemplary method to determine if the object poses a hazard. In some cases, the step of determining if the object poses a hazard includes checking the body state index of a driver as discussed and shown in FIGS. **66** and **67**.

In step **7508**, the ECU **5000** may determine the warning type, frequency and intensity of an alert to warn the driver. In some cases, determining the warning type, frequency and intensity may proceed in a similar manner to step **4428** and step **4430** of FIG. **66**. Next, the ECU **5000** may activate a blind sport warning indicator in step **7510**, to alert a driver of a potential hazard.

In step **7512**, the ECU **5000** determines if the object is still inside the blind spot monitoring zone. This step allows for the possibility that a driver has observed the blind spot warning indicator and adjusted the vehicle so that there is no long an object in the blind spot.

If there is no longer an object in the blind spot monitoring zone, ECU **5000** may return to step **7502**. Otherwise, the ECU **5000** may proceed to step **7514**. In step **7514**, the ECU **5000** determines the trajectory of the tracked object. The trajectory of the object can be determined using any methods including remote sensing as well as GPS based methods. The trajectory can also be based on a parking angle relative to the vehicle and the object, when the vehicle is put in a reverse gear and is not travelling at a 90 degree angle.

In step **7516**, the ECU **5000** determines the relative distance between the motor vehicle and the tracked object. In step **7518**, the ECU **5000** determines if a crash is likely between the vehicle and the tracked object. If not, the ECU **5000** returns to step **7512** to continue monitoring the tracked object. Otherwise, the ECU **5000** proceeds to step **7520** to determine the type of brake control to be used to help prevent the driver from collision with the tracked object.

In parallel with step **7520**, the ECU **5000** may determine body state index **7526** and use look-up table **7528** to select the appropriate type of brake control. For example, if the body state index is 1 or 2, meaning the driver is relatively alert, no control is performed since it is assumed a driver will be aware of the potential threat posed by the object. If the body state index has a value of 3, meaning the driver is somewhat drowsy, some partial brake control is provided to assist the driver. If the body state index has a value of 4, meaning the

driver is very drowsy, full brake control provided to substantially prevent the driver from moving into the cross-traffic. Brake control can include, but is not limited to, increasing or decreasing breaking pressure, or pre-charging or pre-filling the brakes.

After the brake control type has been selected, the ECU **5000** may control the brake control system accordingly in step **7522**. In some cases, at step **7524**, the ECU **5000** may also activate a control warning to alert the driver that one or more vehicle systems are assisting with vehicle control.

While various embodiments have been described, the description is intended to be exemplary, rather than limiting and it will be apparent to those of ordinary skill in the art that many more embodiments and implementations are possible that are within the scope of the embodiments. Accordingly, the embodiments are not to be restricted except in light of the attached claims and their equivalents. Also, various modifications and changes may be made within the scope of the attached claims.

What is claimed is:

1. A method of controlling vehicle systems in a motor vehicle, comprising:

receiving operating information at a first vehicle system from one or more vehicle systems;

determining at the first vehicle system a level of drowsiness based on monitoring information received from one or more monitoring devices;

detecting a hazard based on the operating information from the first vehicle system;

modifying control of the first vehicle system based on the level of drowsiness and the hazard;

selecting a second vehicle system that is different from the first vehicle system;

communicating the level of drowsiness and information about the hazard from the first vehicle system directly to the second vehicle system; and

modifying the control of the second vehicle system based on the level of drowsiness and the hazard.

2. The method according to claim **1**, wherein the first vehicle system is connected to an electronic control unit and where the second vehicle system is connected to the electronic control unit.

3. The method according to claim **1**, wherein the first vehicle system communicates with the second vehicle system through a network.

4. The method according to claim **1**, wherein the control of the second vehicle system is coordinated with the control of the first vehicle system.

5. The method according to claim **1**, wherein the first vehicle system is a blind spot indicator system and wherein the second vehicle system is an electronic power steering system.

6. The method according to claim **5**, wherein the electronic power steering system is controlled to help prevent a driver from turning a steering wheel of the motor vehicle when the blind spot indicator system detects the hazard and when the blind spot indicator system determines the driver is drowsy based on the level of drowsiness.

7. A method of controlling vehicle systems in a motor vehicle, comprising:

operating a first vehicle system, the operation of the first vehicle system comprising:

determining a first level of drowsiness associated with a driver of the motor vehicle based on monitoring information received from one or more monitoring devices;

detecting a hazard based on operating information from the first vehicle system;

modifying control of the first vehicle system based on the level of drowsiness and the hazard;

submitting information related to the hazard to a second vehicle system;

operating the second vehicle system, the operation of the second vehicle comprising:

determining a second level of drowsiness based on monitoring information received from one or more monitoring devices;

receiving the information related to the hazard from the first vehicle system;

checking for the hazard; and

modifying the control of the second vehicle system based on the second level of drowsiness and the hazard.

8. The method according to claim **7**, wherein the first level of drowsiness and the second level of drowsiness are a body state index having at least two values.

9. The method according to claim **7**, wherein the submitted information includes instructions for the second vehicle system to check for potential hazards.

10. The method according to claim **7**, wherein the modified control of the second vehicle system is coordinated with the modified control of the first vehicle system.

11. A motor vehicle, comprising:

a first vehicle system and a second vehicle system in communication with the first vehicle system;

the first vehicle system being capable of detecting at least one hazard and the first vehicle system being configured to determine a level of drowsiness for a driver;

the second vehicle system being capable of detecting at least one hazard and the second vehicle system being configured to determine the level of drowsiness for the driver;

wherein the operation of the first vehicle system can be modified according to the level of drowsiness and wherein the operation of the second vehicle system can be modified according to the level of drowsiness; and

wherein the second vehicle system is configured to check for at least one hazard when the first vehicle system detects at least one hazard,

wherein the second vehicle system checks for at least one hazard in response to information sent by the first vehicle system.

12. The motor vehicle according to claim **11**, wherein the first vehicle system is connected to an electronic control unit and the second vehicle system is connected to the electronic control unit and wherein second vehicle system checks for at least one hazard in response to instructions from the electronic control unit.

13. The motor vehicle according to claim **11**, wherein the motor vehicle includes three or more vehicle systems.

14. The motor vehicle according to claim **13**, wherein the three or more vehicle systems check for hazards in response to instructions from an electronic control unit.

15. The motor vehicle according to claim **13**, wherein the three or more vehicle systems are connected to one another using a network.

16. The motor vehicle according to claim **13**, wherein the second vehicle system and a third vehicle system check for hazards in response to instructions from the first vehicle system.

* * * * *