US009336043B2

(12) **United States Patent**
Preston

(10) **Patent No.: US 9,336,043 B2**
(45) **Date of Patent: *May 10, 2016**

(54) **METHOD AND APPARATUS FOR A TASK PRIORITY PROCESSING SYSTEM**

(76) Inventor: **Dan Alan Preston**, Bainbridge Island, WA (US)

(*) Notice: Subject to any disclaimer, the term of this patent is extended or adjusted under 35 U.S.C. 154(b) by 6 days.

This patent is subject to a terminal disclaimer.

(21) Appl. No.: **13/246,405**

(22) Filed: **Sep. 27, 2011**

(65) **Prior Publication Data**

US 2012/0083971 A1 Apr. 5, 2012

Related U.S. Application Data

(63) Continuation of application No. 12/483,214, filed on Jun. 11, 2009, and a continuation of application No. 11/462,958, filed on Aug. 7, 2006, now Pat. No. 7,778,739, and a continuation of application No. 09/841,915, filed on Apr. 24, 2001, now Pat. No. 7,146,260.

(51) **Int. Cl.**
H04L 12/28 (2006.01)
H04W 4/00 (2009.01)
(Continued)

(52) **U.S. Cl.**
CPC . ***G06F 9/46*** (2013.01); ***B60R 25/00*** (2013.01); ***G06F 11/2028*** (2013.01); ***G06F 11/2035*** (2013.01); ***G06F 11/2046*** (2013.01); ***G06F 11/3013*** (2013.01); ***G06F 11/3051*** (2013.01); ***G06F 11/328*** (2013.01); ***G06F 13/4081*** (2013.01); ***G06Q 30/0641*** (2013.01); ***G07C 5/08*** (2013.01); ***H04L 12/24*** (2013.01);
(Continued)

(58) **Field of Classification Search**
CPC . H04L 12/24; H04L 12/403; H04L 12/40169; H04L 67/12; H04L 67/125; G06F 11/328; G06F 11/2028; G06F 11/2035; G06F 11/2046; G06F 11/3013; G06F 13/4081
See application file for complete search history.

(56) **References Cited**

U.S. PATENT DOCUMENTS

2,995,318 A 8/1961 Cocharo
3,812,468 A 5/1974 Wollum et al.
(Continued)

FOREIGN PATENT DOCUMENTS

DE 3125161 1/1983
DE 4237987 5/1994
(Continued)

OTHER PUBLICATIONS

Robert Bosch GmbH, "CAN Specification, Version 2.0," Sep. 1991.
(Continued)

Primary Examiner — Steven H Nguyen

(57) **ABSTRACT**

A vehicle system comprises multiple processors and a communication system adapted to run real-time vehicle applications. The system adds new devices, identifies data generated by the new device and identifies another device that can input or output the data. The vehicle system also includes a dynamic configuration system configured to operate on the multiple processors and store critical information about the applications running on the multiple processors. The configuration manager automatically detects an application failure and initiates a reconfiguration process. The configuration manager then downloads from memory the previously stored critical data associated with the failed application and initiates a reboot operation for the failed application.

16 Claims, 21 Drawing Sheets

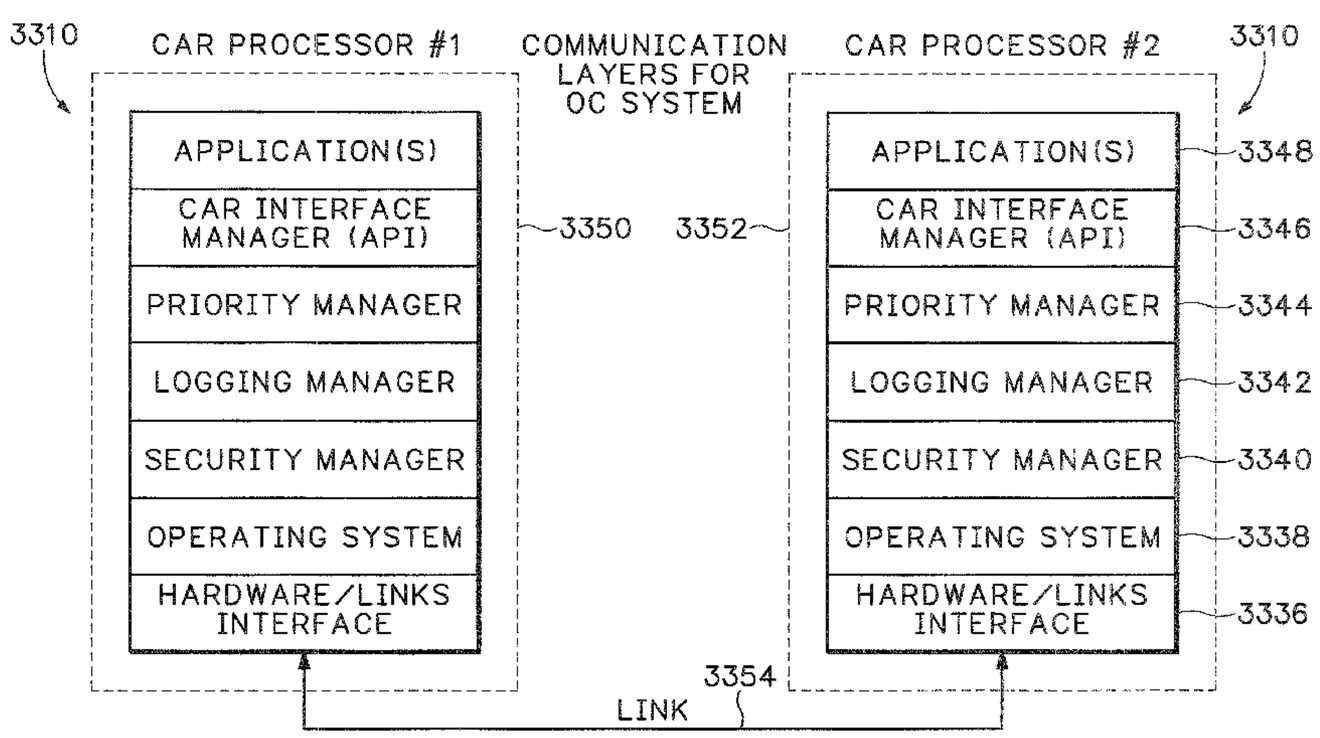

(51) **Int. Cl.**

G06F 9/46	(2006.01)
B60R 25/00	(2013.01)
G06Q 30/06	(2012.01)
H04L 12/24	(2006.01)
H04L 12/40	(2006.01)
H04L 12/403	(2006.01)
G06F 11/20	(2006.01)
G06F 11/30	(2006.01)
G06F 11/32	(2006.01)
G07C 5/08	(2006.01)
H04L 29/08	(2006.01)
G06F 13/40	(2006.01)

(52) **U.S. Cl.**

CPC ***H04L 12/403*** (2013.01); ***H04L 12/40169*** (2013.01); ***H04L 41/00*** (2013.01); ***H04L 41/0809*** (2013.01); ***H04L 67/12*** (2013.01); ***H04L 67/125*** (2013.01); *H04L 2012/40273* (2013.01); *Y10T 307/50* (2015.04)

(56) **References Cited**

U.S. PATENT DOCUMENTS

4,303,978 A 12/1981 Shaw
4,528,563 A 7/1985 Takeuchi
4,558,460 A 12/1985 Tanaka
4,591,976 A 5/1986 Webber
4,735,274 A 4/1988 Good et al.
4,829,434 A 5/1989 Karmel
4,835,537 A 5/1989 Manion
4,907,159 A 3/1990 Mauge
4,931,930 A 6/1990 Shyu et al.
4,959,800 A 9/1990 Woolley et al.
5,008,678 A 4/1991 Herman
5,027,432 A 6/1991 Skala
5,031,330 A 7/1991 Stuart
5,045,937 A 9/1991 Myrick
5,111,401 A 5/1992 Everett, Jr.
5,115,245 A 5/1992 Wen
5,243,640 A 9/1993 Hadley et al.
5,245,909 A 9/1993 Corrigan
5,287,199 A 2/1994 Zoccolillo
5,303,297 A 4/1994 Hillis
5,339,086 A 8/1994 DeLuca
5,341,301 A 8/1994 Shirai
5,438,361 A 8/1995 Coleman
5,440,726 A * 8/1995 Fuchs et al. 714/20
5,471,214 A 11/1995 Faibish
5,485,892 A 1/1996 Fujita
5,500,794 A 3/1996 Fujita et al.
5,506,963 A 4/1996 Ducateau
5,532,706 A 7/1996 Reinhardt
5,537,539 A * 7/1996 Narihiro 714/38.11
5,552,773 A 9/1996 Kuhnert
5,555,503 A 9/1996 Kyrtsos et al.
5,572,201 A 11/1996 Graham
5,579,219 A 11/1996 Mori et al.
5,581,462 A 12/1996 Rogers
5,585,798 A 12/1996 Yoshioka
5,617,085 A 4/1997 Tsutsumi
5,646,612 A 7/1997 Byon
5,661,811 A 8/1997 Huemann et al.
5,742,141 A 4/1998 Czekaj
5,749,060 A 5/1998 Graf
5,751,211 A 5/1998 Shirai
5,754,123 A 5/1998 Nashif et al.
5,761,320 A 6/1998 Farinelli
5,786,998 A 7/1998 Neeson
5,787,246 A 7/1998 Lichtman
5,793,366 A 8/1998 Mano et al.
5,794,164 A 8/1998 Beckert et al.
5,859,878 A 1/1999 Phillips et al.
5,872,508 A 2/1999 Taoka
5,898,392 A 4/1999 Bambini
5,907,293 A 5/1999 Tognazzini
5,909,559 A 6/1999 So
5,915,214 A 6/1999 Reece
5,943,427 A 8/1999 Massie
5,948,040 A 9/1999 DeLorme et al.
5,951,620 A 9/1999 Ahrens et al.
5,956,016 A 9/1999 Kuenzner et al.
5,956,025 A 9/1999 Goulden et al.
5,956,250 A 9/1999 Gudat et al.
5,957,985 A 9/1999 Wong
5,959,536 A * 9/1999 Chambers et al. 710/104
5,963,092 A 10/1999 VanZalinge
5,964,822 A 10/1999 Alland
5,966,658 A 10/1999 Kennedy, III
5,969,598 A 10/1999 Kimura
5,974,554 A 10/1999 Oh
5,977,906 A 11/1999 Ameen
5,983,092 A 11/1999 Whinnett
5,983,161 A 11/1999 Lemelson
6,009,330 A 12/1999 Kennedy, III
6,009,403 A 12/1999 Sato
6,028,537 A 2/2000 Suman
6,028,548 A 2/2000 Farmer
6,032,089 A 2/2000 Buckley
6,032,202 A 2/2000 Lea et al.
6,037,860 A 3/2000 Zander et al.
6,038,625 A 3/2000 Ogino et al.
6,052,632 A 4/2000 Iihoshi
6,054,950 A 4/2000 Fontana
6,060,989 A 5/2000 Gehlot
6,061,002 A 5/2000 Weber et al.
6,061,709 A 5/2000 Bronte
6,075,467 A 6/2000 Ninagawa
6,097,285 A 8/2000 Curtin
6,097,314 A 8/2000 Desens et al.
6,105,119 A 8/2000 Kerr et al.
6,128,608 A 10/2000 Barnhill
6,144,336 A 11/2000 Preston et al.
6,148,261 A 11/2000 Obradovich
6,150,961 A 11/2000 Alewine
6,154,123 A 11/2000 Kleinberg
6,161,071 A 12/2000 Shuman
6,163,711 A 12/2000 Juntunen
6,166,627 A 12/2000 Reeley
6,167,253 A 12/2000 Farris
6,169,894 B1 1/2001 McCormick
6,175,728 B1 1/2001 Mitama
6,175,782 B1 1/2001 Obradovich
6,179,489 B1 1/2001 So et al.
6,181,922 B1 1/2001 Iwai
6,181,994 B1 1/2001 Colson
6,182,006 B1 1/2001 Meek
6,185,491 B1 * 2/2001 Gray et al. 701/36
6,195,760 B1 2/2001 Chung et al.
6,198,996 B1 3/2001 Berstis
6,199,136 B1 3/2001 Shteyn
6,202,027 B1 3/2001 Alland
6,203,366 B1 3/2001 Muller
6,204,804 B1 3/2001 Andersson
6,226,389 B1 5/2001 Lemelson, III
6,233,468 B1 5/2001 Chen
6,236,652 B1 5/2001 Preston
6,240,365 B1 5/2001 Bunn
6,243,450 B1 6/2001 Jansen
6,243,645 B1 6/2001 Moteki et al.
6,243,772 B1 6/2001 Ghori et al.
6,247,079 B1 6/2001 Papa et al.
6,247,144 B1 6/2001 Macias-Garza et al.
6,252,544 B1 6/2001 Hoffberg
6,275,231 B1 8/2001 Obradovich
6,282,714 B1 8/2001 Ghori et al.
D448,366 S 9/2001 Youngers
6,292,109 B1 9/2001 Murano
6,292,136 B1 9/2001 Egnell
6,292,747 B1 9/2001 Amro
6,294,987 B1 9/2001 Matsuda
6,295,541 B1 9/2001 Bodnar et al.
6,297,732 B2 10/2001 Hsu
6,298,302 B2 10/2001 Walgers

(56) **References Cited**

U.S. PATENT DOCUMENTS

6,298,370 B1 10/2001 Tang et al.
6,314,326 B1 11/2001 Fuchu
6,321,344 B1 11/2001 Fenchel
6,326,903 B1 12/2001 Gross
6,327,536 B1 12/2001 Tsuji
6,362,748 B1 3/2002 Huang
6,370,449 B1 4/2002 Razavi et al.
6,374,286 B1 4/2002 Gee
6,377,860 B1 4/2002 Gray
6,382,897 B2 5/2002 Mattio
6,389,340 B1 5/2002 Rayner
6,401,029 B1 6/2002 Kubota
6,405,132 B1 6/2002 Breed
6,408,174 B1 6/2002 Steijer
6,417,782 B1 7/2002 Darnall
6,421,429 B1 7/2002 Merritt
6,429,789 B1 8/2002 Kiridena
6,429,812 B1 8/2002 Hoffberg
6,430,164 B1 * 8/2002 Jones et al. 370/313
6,433,679 B1 8/2002 Schmid
6,434,447 B1 8/2002 Shteyn
6,442,485 B2 8/2002 Evans
6,445,308 B1 9/2002 Koike
6,445,983 B1 9/2002 Dickson et al.
6,449,541 B1 9/2002 Goldberg et al.
6,452,484 B1 9/2002 Drori
6,463,373 B2 10/2002 Suganuma
6,484,080 B2 11/2002 Breed
6,487,717 B1 11/2002 Brunemann et al.
6,489,884 B1 12/2002 Lamberson et al.
6,493,338 B1 12/2002 Preston
6,496,107 B1 12/2002 Himmelstein
6,496,117 B2 12/2002 Gutta
6,496,689 B1 12/2002 Keller
6,498,939 B1 12/2002 Thomas
6,505,100 B1 1/2003 Stuempfle
6,515,595 B1 2/2003 Obradovich
6,522,875 B1 2/2003 Dowling
6,523,696 B1 2/2003 Saito et al.
6,526,335 B1 2/2003 Treyz et al.
6,542,812 B1 4/2003 Obradovich et al.
6,542,814 B2 4/2003 Polidi et al.
6,559,773 B1 * 5/2003 Berry 340/815.4
6,567,069 B1 5/2003 Bontrager et al.
6,571,136 B1 5/2003 Staiger
6,574,734 B1 6/2003 Colson et al.
6,580,973 B2 6/2003 Leivian et al.
6,584,403 B2 6/2003 Bunn
D479,228 S 9/2003 Sakaguchi et al.
6,614,349 B1 9/2003 Proctor et al.
6,615,137 B2 9/2003 Lutter
6,616,071 B2 9/2003 Kitamura
6,622,083 B1 9/2003 Knockeart
6,629,033 B2 9/2003 Preston
6,641,087 B1 11/2003 Nelson
6,647,270 B1 11/2003 Himmelstein
6,647,328 B2 11/2003 Walker
6,670,912 B2 12/2003 Honda
6,675,081 B2 1/2004 Shuman
6,678,892 B1 1/2004 Lavelle et al.
6,681,121 B1 1/2004 Preston
6,690,681 B1 2/2004 Preston
6,707,421 B1 3/2004 Drury et al.
6,708,100 B2 3/2004 Russell
6,714,139 B2 3/2004 Saito
6,718,187 B1 4/2004 Takagi et al.
6,725,031 B2 4/2004 Watler
6,734,799 B2 5/2004 Munch
6,738,697 B2 5/2004 Breed
6,748,278 B1 6/2004 Maymudes et al.
6,754,183 B1 6/2004 Razavi et al.
6,756,998 B1 6/2004 Bilger
6,765,495 B1 7/2004 Dunning et al.
6,771,208 B2 8/2004 Lutter
6,771,629 B1 8/2004 Preston
6,778,073 B2 8/2004 Lutter
6,778,924 B2 8/2004 Hanse
6,782,315 B2 8/2004 Lu
6,785,551 B1 8/2004 Richard
6,792,351 B2 9/2004 Lutter
6,799,092 B2 9/2004 Lu
6,801,994 B2 10/2004 Beckert et al.
6,806,977 B1 10/2004 Freeny et al.
6,816,458 B1 11/2004 Kroon
6,876,642 B1 4/2005 Adams
6,892,230 B1 5/2005 Gu et al.
6,895,238 B2 5/2005 Newell
6,895,240 B2 5/2005 Laursen
6,901,057 B2 5/2005 Rune
6,906,619 B2 6/2005 Williams
6,917,801 B2 7/2005 Witte et al.
6,920,129 B2 7/2005 Preston
6,925,368 B2 8/2005 Funkhouser et al.
6,937,732 B2 8/2005 Ohmura
6,952,155 B2 10/2005 Himmelstein
6,968,513 B1 11/2005 Rinebold et al.
6,972,669 B2 12/2005 Saito
6,973,030 B2 12/2005 Pecen
6,980,092 B2 12/2005 Turnbull
6,993,511 B2 1/2006 Himmelstein
7,000,469 B2 2/2006 Foxlin
7,006,950 B1 2/2006 Greiffenhagen
7,024,363 B1 4/2006 Comerford
7,039,858 B2 5/2006 Humpleman et al.
7,079,993 B2 7/2006 Stephenson
7,085,710 B1 8/2006 Beckert et al.
7,089,206 B2 8/2006 Martin
7,092,723 B2 8/2006 Himmelstein
7,103,646 B1 9/2006 Suzuki
7,103,834 B1 9/2006 Humpleman et al.
7,120,129 B2 10/2006 Ayyagari
7,123,926 B2 10/2006 Himmelstein
7,146,260 B2 * 12/2006 Preston et al. 701/24
7,151,768 B2 12/2006 Preston
7,158,842 B2 1/2007 Ohmura
7,158,956 B1 1/2007 Himmelstein
7,164,662 B2 1/2007 Preston
7,171,189 B2 1/2007 Bianconi
7,178,049 B2 2/2007 Lutter
7,187,947 B1 3/2007 White
7,206,305 B2 4/2007 Preston
7,207,042 B2 4/2007 Smith
7,215,965 B2 5/2007 Fournier et al.
7,216,347 B1 5/2007 Harrison et al.
7,221,669 B2 5/2007 Preston
7,239,949 B2 7/2007 Lu
7,249,266 B2 7/2007 Margalit
7,257,426 B1 8/2007 Witkowski
7,263,332 B1 8/2007 Nelson
7,269,188 B2 9/2007 Smith
7,272,637 B1 9/2007 Himmelstein
7,274,988 B2 9/2007 Mukaiyama
7,277,693 B2 10/2007 Chen
7,283,567 B2 10/2007 Preston
7,283,904 B2 10/2007 Benjamin
7,286,522 B2 10/2007 Preston
7,289,906 B2 10/2007 van der Merwe et al.
7,317,696 B2 1/2008 Preston
7,337,650 B1 3/2008 Preston
7,343,160 B2 3/2008 Morton
7,375,728 B2 5/2008 Donath
7,379,707 B2 5/2008 DiFonzo
7,411,982 B2 8/2008 Smith
7,418,476 B2 8/2008 Salesky
7,426,437 B2 9/2008 Breed
7,450,955 B2 11/2008 Himmelstein
7,480,501 B2 1/2009 Petite
7,483,964 B1 1/2009 Jackson et al.
7,484,008 B1 1/2009 Gelvin
7,493,645 B1 2/2009 Tranchina
7,506,020 B2 3/2009 Ellis
7,508,810 B2 3/2009 Moinzadeh
7,509,134 B2 3/2009 Fournier et al.
7,536,277 B2 5/2009 Pattipatti et al.

(56) **References Cited**

U.S. PATENT DOCUMENTS

7,579,942	B2	8/2009	Kalik
7,587,102	B2	9/2009	Maris
7,587,370	B2	9/2009	Himmelstein
7,594,000	B2	9/2009	Himmelstein
7,596,391	B2	9/2009	Himmelstein
7,599,715	B2	10/2009	Himmelstein
7,610,331	B1	10/2009	Genske
7,614,055	B2	11/2009	Buskens et al.
7,664,315	B2	2/2010	Woodfill
7,681,448	B1	3/2010	Preston
7,689,321	B2	3/2010	Karlsson
7,733,853	B2	6/2010	Moinzadeh et al.
7,747,281	B2	6/2010	Preston
7,778,739	B2	8/2010	Preston et al.
7,848,763	B2	12/2010	Fournier et al.
7,891,004	B1	2/2011	Gelvin et al.
7,924,934	B2	4/2011	Birmingham
7,928,898	B2	4/2011	Fraenken
7,966,111	B2	6/2011	Moinzadeh et al.
7,970,500	B2	6/2011	Parra Carque
7,979,095	B2	7/2011	Birmingham
7,983,310	B2	7/2011	Hirano et al.
8,014,942	B2	9/2011	Moinzadeh et al.
8,036,201	B2	10/2011	Moinzadeh et al.
8,036,600	B2	10/2011	Garrett et al.
8,045,729	B2	10/2011	Preston et al.
8,063,347	B1	11/2011	Urbano et al.
8,068,792	B2	11/2011	Preston et al.
8,108,092	B2	1/2012	Phillips et al.
8,165,057	B2	4/2012	Preston et al.
8,204,927	B1	6/2012	Duong et al.
8,244,408	B2	8/2012	Lee et al.
8,260,515	B2	9/2012	Huang et al.
8,331,279	B2	12/2012	Preston et al.
8,346,186	B1 *	1/2013	Preston et al. 455/99
8,751,712	B2	6/2014	Preston et al.
8,958,315	B2	2/2015	Preston et al.
2001/0009855	A1	7/2001	L'Anson
2001/0033225	A1 *	10/2001	Razavi et al. 340/425.5
2002/0012329	A1	1/2002	Atkinson et al.
2002/0017567	A1	2/2002	Connolly et al.
2002/0022927	A1	2/2002	Lemelson et al.
2002/0070852	A1	6/2002	Trauner
2002/0083143	A1	6/2002	Cheng
2002/0085043	A1	7/2002	Ribak
2002/0095501	A1	7/2002	Chiloyan et al.
2002/0098878	A1	7/2002	Mooney et al.
2002/0105423	A1	8/2002	Rast
2002/0123325	A1	9/2002	Cooper
2002/0144010	A1	10/2002	Younis
2002/0144079	A1	10/2002	Willis et al.
2003/0060188	A1	3/2003	Gidron
2003/0078754	A1	4/2003	Hamza
2003/0158614	A1	8/2003	Friel
2003/0212996	A1	11/2003	Wolzien
2004/0162064	A1	8/2004	Himmelstein
2004/0164228	A1	8/2004	Fogg
2005/0009506	A1	1/2005	Smolentzov
2005/0070221	A1	3/2005	Upton
2005/0130656	A1	6/2005	Chen
2005/0153654	A1	7/2005	Anderson
2005/0232469	A1	10/2005	Schofield et al.
2005/0251328	A1	11/2005	Merwe et al.
2005/0260984	A1	11/2005	Karabinis
2005/0275505	A1	12/2005	Himmelstein
2005/0278712	A1	12/2005	Buskens et al.
2006/0132357	A1	6/2006	Pozgay et al.
2006/0206576	A1	9/2006	Obradovich et al.
2006/0293829	A1	12/2006	Cornwell et al.
2007/0115868	A1	5/2007	Chen
2007/0115897	A1	5/2007	Chen
2007/0260372	A1	11/2007	Langer
2007/0260373	A1	11/2007	Langer et al.
2008/0092140	A1	4/2008	Doninger et al.
2008/0169998	A1	7/2008	Jacobsen et al.
2009/0090592	A1	4/2009	Mordukhovich
2009/0240481	A1	9/2009	Durrant-Whyte et al.
2009/0268923	A1	10/2009	Li
2009/0268947	A1	10/2009	Schaufler
2009/0284378	A1	11/2009	Ferren et al.
2009/0319063	A1	12/2009	Pan
2010/0017543	A1	1/2010	Preston et al.
2011/0212700	A1	9/2011	Petite
2012/0083971	A1	4/2012	Preston et al.
2012/0183153	A1	7/2012	Preston et al.

FOREIGN PATENT DOCUMENTS

DE	19647283	A1	5/1997
DE	19922608		11/2000
DE	19931161		1/2001
EP	0355490	B1	2/1990
EP	0 441 576		8/1991
EP	0473866	A2	3/1992
EP	0 841 648		5/1998
EP	0841648		5/1998
EP	1 355 128		10/2003
GB	2097563		11/1982
JP	10-076115		10/1999
JP	2000207691		7/2000
KR	1995-0017619		7/1995
KR	1999-021740		3/1999
WO	WO9624229		8/1996
WO	WO9908436		2/1999
WO	WO9957662		11/1999
WO	WO9965183		12/1999
WO	WO0029948		5/2000
WO	WO 0029948		5/2000
WO	WO 0079390		6/2000
WO	WO0040038		7/2000
WO	WO0130061		4/2001
WO	WO0158110		8/2001
WO	WO/03/033092		4/2003

OTHER PUBLICATIONS

Wang, Z. et al. "A Message Priority Assignment Algorithm for CAN-based Networks," in CSC '92 Proceedings of the 1992 ACM Annual Conference on Communications, Mar. 1992.

Fay-Wolfe, et al., "Real-Time CORBA," IEEE Transactions on Parallel and Distributed Systems, vol. 11, Issue 10 (Oct. 2000).

Husein et al., "A Priority Based Service Algorithm for Use in Time-Critical and Integrated Services Networks," Proceedings of IEEE Singapore International Conference, vol. 1, pp. 93-97, 1993.

Release 1 Specification Set from the Automotive Multimedia Interface Collaboration (AMI-C), Jan. 2001.

Open Services Gateway Initiative (OSGi) Service Gateway Specification Release 1.0, May 2000.

Ellis, S. M. , "Dynamic Software Reconfiguration for Fault-Tolerant Real-Time Avionic Systems," Microprocessor and Microsystems, Proceedings of the 1996 Avionics Conference and Exhibition, vol. 21, issue 1, pp. 29-39, Jul. 1997.

Peter Walzer, and Hans-Wilhelm Grove, "Integrated Research Volkswagen (IRVW) Futura," Passenger Car Meeting and Exposition, Dearborn, Michigan, Sep. 17-20, 1990.

Nace, W. & Koopman, P., "A Product Family Based Approach to Graceful Degradation," Proceedings of DIPES 2000, International IFIP WG 10.3/WG 10.4/ WG 10.5 Workshop on, Distributed and Parallel Embedded Systems, Paderborn University, Germany, Oct. 18-19, 2000.

Meredith Beveridge, "M.S. Project Report, Jini on the Control Area Network (CAN): A Case Study in Portability Failure", Department of Electrical and Computer Engineering, Carnegie Mellon University, Phil Koopman—advisor, Mar. 2001.

Universal Serial Bus Specification, Revision 1.1, Compaq, Intel, Microsoft and NEC, Sep. 23, 1998.

Universal Serial Bus Specification , Revision 2.0, Compaq, Hewlett-Packard, Intel, Lucent, Microsoft, NEC and Philips, Apr. 27, 2000.

Tindell, Ken, et al, "A CAN Communications Concept with Guaranteed Message Latencies", Oct. 1998.

(56) **References Cited**

OTHER PUBLICATIONS

Robinson, Ralph L., "An Open Versus Closed Architecture for Multimedia Systems," Proceedings of the 2000 International Congress on Transportation Electronics, pp. 445-450, Oct. 2000.
Y. Chubachi and H. Okagaki , "The Development of Traffic Information System Using AutoPC," Proceedings of the 2000 International Congress on Transportation Electronics, pp. 81-88, Oct. 2000.
M. Tchorowski and J. Mate, "Avionics and Automotive bandwagon flying together on the infotronics Highway," Proceedings of the 1998 International Congress on Transportation Electronics, pp. 351-354, Oct. 1998.
Fout, Tom, "Universal Plug and Play in Windows XP," Jul. 1, 2001.
Yen, H.W., et al., "Information Security and Integrity in Network Vehicle," Proceedings of the 1998 International Congress on Transportation Electronics, pp. 319-323, Oct. 1998.
Minagawa, Shoichi, et al, "Open Architectural Car Multimedia Platform," Proceedings of the 1998 International Congress on Transportation Electronics, pp. 198-194 Oct. 1998.
Kanemitsu, Dean et al. "Productivitys Next Dimension—The Mobile Office Computing Platform," Proceedings of the 2000 International Congress on Transportation Electronics, pp. 159-165, Oct. 2000.
Bhaskaran, Parvathy, "Reinventing the Car Radio for the Internet-the iRadio™," Proceedings of the 2000, International Congress on Transportation Electronics, pp. 147-153, Oct. 2000.
Buckley, Stephen, et al., "The Car as a Peripheral-Adapting a Portable Computer to a Vehicle Intranet," Proceedings of the 1998 International Congress on Transportation Electronics, pp. 211-217, Oct. 1998.
Arnold, Ken, et al., "The Jini Specification," Publisher Addison-Wesley, 1999.
Powers, Chuck, et al., Today's Electronics in Todays Vehicles, Proceedings of the 1998 International Congress on Transportation Electronics, pp. 195-200, Oct. 1998.
Vaught, Mark A., "Phone-Activated Auto-Muting Circuit," Jan. 1990.
Clarion Co. Ltd., "Clarion AutoPC 310C Owner's Manual," 1998.
Clarion, "2002 Clarion Product Catalog Car Audio, Multimedia, Marine, and Security Retail Products," 2002.
Clarion Co., Ltd., "Joyride Quick Reference Guide," 2000-2001.
Joyride, Windows CE System Software User's Manual , 1999-2001.
Lind, R., et al., "The Network Vehicle—A Glimpse into the Future of Mobile Multi-Media," IEEE AES Systems Magazine, Sep. 1999.
Arun Ayyagari, Bluetooth ESDP for UPnP, Published Jan. 31, 2001.
First Amended Complaint and Answer from *Eagle Harbor Holdings, LLC, and Mediustech, LLC*, v. *Ford Motor Company*, Washington Western District Court, Case No. 3:11-CV-05503-BHS, Case filed: Jun. 30, 2011.
Exhibits and Modules from *Eagle Harbor Holdings, LLC, and Mediustech, LLC*, v. *Ford Motor Company*, Washington Western District Court, Case No. 3:11-CV-05503-BHS, Case filed: Jun. 30, 2011.
Longbin, Xiaoquain, Yizu Kang, Bar-Shalom: Unbiased converted measurements for tracking; IEEE Transactions on Aerospace and Electronic Systems vol. 34(4), Jul. 1998, pp. 1023-1027.
Miller, Drummond: Comparison of methodologies for mitigating coordinate transformation basis in target tracking; Proceedings SPIE Conference on Signal and Data Processing of Small Targets 2000, vol. 4048, Jul. 2002, pp. 414-426.
Duan, Han, Rong Li: Comments on "Unbiased (debiased) converted measurements for tracking" IEEE Transactions on Aerospace and Electronic Systems, vol. 40(4), Oct. 2004, pp. 1374-1377.
A. Das, R. Fierro, V. Kumar, J. Ostrowski, J. Spletzer, and C. Taylor, "A Framework for Vision Based Formation Control", IEEE Transactions on Robotics and Automation, vol. 18, Nov. 5, 2001, pp. 1-13.
Ada 95 Transition Support—Lessons Learned, Sections 3, 4, and 5, CACI, Inc.—Federal, Nov. 15, 1996, 14 pages.
AMIC. Architecture specification release 1, 2001; 35 pages.
Bluetooth Doc; Advance Audio Distribution Profile Specification; Adopted version 1.0; dated May 22, 2003; 75 pages.
Bluetooth Doc; Audio/Video Remote Control Profile; Version 1.0 Adopted; dated May 22, 2003; 52 pages.
Bluetooth Hands-free Profile 1.5 Nov. 25, 2005.
Bluetooth Specification version 1.1; Feb. 22, 2001; 452 pages.
Boeing News Release, "Boeing Demonstrates JSF Avionics Multi-Sensor Fusion", Seattle, WA, May 9, 2000, pp. 1-2.
Boeing Statement, "Chairman and CEO Phil Condit on the JSF Decision", Washington, D.C., Oct. 26, 2001, pp. 1-2.
Counterair: The Cutting Edge, Ch. 2 "The Evolutionary Trajectory the Fighter Pilot-Here to Stay?" AF2025 v3c8-2, Dec. 1996, pp. 1-7.
Counterair: The Cutting Edge, Ch. 4 "The Virtual Trajectory Air Superiority without an "Air" Force?" AF2025 v3c8-4, Dec. 1996, pp. 1-12.
Embedded Bluetooth Migrates to Lisbon and Seattle; 11 pages; Jan. 23, 2008.
Green Hills Software, Inc., "The AdaMULTI 2000 Integrated Development Environment," Copyright 2002, printed Jul. 9, 2002; 7 pages.
H. Chung, L. Ojeda, and J. Borenstein, "Sensor Fusion for Mobile Robot Dead-reckoning with a Precision-calibrated Fiber Optic Gyroscope", 2001 IEEE International Conference on Robotics and Automation, Seoul, Korea, May 21-26, 2001, pp. 1-6.
Hitachi Automated Highway System (AHS), Automotive Products, Hitachi, Ltd., Copyright 1994-2002, 8 pages.
IEEE Standard for Information Technology—POSIX Based Supercomputing Application Environment Profile; Jun. 14, 1995, 72 pages.
ISIS Project: Sensor Fusion, Linkoping University Division of Automatic Control and Communication Systems in cooperation with SAAB (Dynamics and Aircraft), 2001, 18 pages.
J. Takezaki, N. Ueki, T. Minowa, H. Kondoh, "Support System for Safe Driving—A Step Toward ITS Autonomous Driving—", Hitachi Review, vol. 49, Nov. 3, 2000, pp. 1-8.
Joint Strike Fighter Terrain Database, ets-news.com "Simulator Solutions" 2002, 3 pages.
Luttge, Karsten; "E-Charging API: Outsource Charging to a Payment Service Provider"; IEEE; 2001 (pp. 216-222).
M. Chantler, G. Russel, and R. Dunbar, "Probabilistic Sensor Fusion for Reliable Workspace Sensing", Fourth IARP workship on Underwater Robotics, Genoa, Nov. 1992, pp. 1-14.
MSRC Redacted Proposal, 3.0 Architecture Development, Aug. 29, 2002; pp. 1-43.
Powerpoint Presentation by Robert Allen—Boeing Phantom Works entitled "Real-Time Embedded Avionics System Security and COTS Operating Systems", Open Group Real-Time Forum, Jul. 18, 2001, 16 pages.
Product description of Raytheon Electronic Systems (ES), Copyright 2002, pp. 1-2.
Product description of Raytheon RT Secure, "Development Environment", Copyright 2001, pp. 1-2.
Product description of Raytheon RT Secure, "Embedded Hard Real-Time Secure Operating System", Copyright 2000, pp. 1-2.
S.G. Goodridge, "Multimedia Sensor Fusion for Intelligent Camera Control and Human-Computer Interaction", Dissertation submitted to the Graduate Faculty of North Carolina State University in partial fulfillment of the requirements for the degree of Doctor of Philosophy in Electrical Engineering, Raleigh, NC, 1997, pp. 1-5.
Specification of the Bluetooth System v1.0.B; Dec. 1, 1999.
Specification of the Bluetooth System v1.1; Feb. 22, 2001.
TNO FEL Annual Review 1998: Quality works, Observation Systems Division; "The Whole is More Than the Sum of its Parts"; 16 pages.
Vehicle Dynamics Lab, University of California, Berkeley, funded by BMW, current members: D. Caveney and B. Feldman, "Adaptive Cruise Control", at least as early as 2002, printed Jul. 2, 2002; 17 pages.
Stirling A: "Mobile Multimedia platforms" Vehicular Technology Conference Fall 2000. IEEE VTS Fall VTC2000. 52nd Vehicular Technology Conference (Cat. No. 00CH37152).
Nusser R. et al.: "Bluetooth-based wireless connectivity in an automotive environment" Vehicular Technology Conference Fall 2000. IEEE VTS Fall VTC2000 52nd Vehicular Techonlogy Conference (Cat. No. 00CH37152).

(56) **References Cited**

OTHER PUBLICATIONS

Martins e f v et al. "design of an OS9 operating system extension for a message-passing multiprocesor" Microprocessors and Microsystems, IPC Business Press LT. London, BG, vol. 21, No. 9, Apr. 1, 1998, pp. 533-543.

Gutierrez Garcia JJ et al. "Minimizing the effects of jitter in distributed hard real-time systems" Journal of Systems Architecture, Elsevier Science Publishers BV., Amsterdam, NL, vol. 41, No. 6/7. Dec. 15, 1996, pp. 431-447.

International Search Report for PCT/US02/020402; Mailing date Apr. 3, 2003.

International Search Report for PCT/US02/020403; Mailing date Jan. 27, 2003.

International Search Report for PCT/US02/016364; Mailing date Feb. 14, 2003.

International Search Report for PCT/US02/016371; Mailing date Aug. 18, 2003.

* cited by examiner

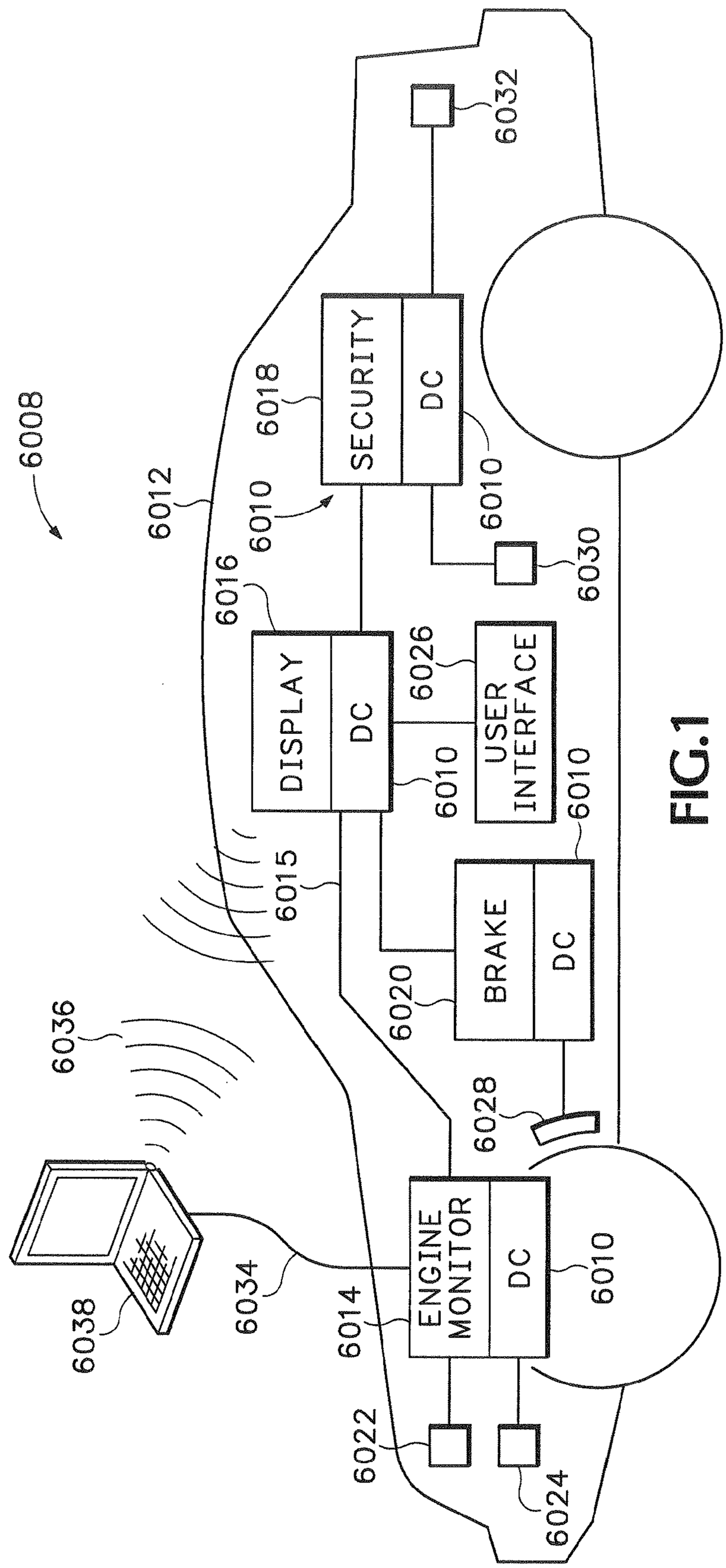
6008
6012
6010
6018
SECURITY
DC
6010
6032
6030
6016
DISPLAY
DC
6026
USER INTERFACE
6010
6010
6015
BRAKE
DC
6020
6028
6036
6038
6034
6014
ENGINE MONITOR
DC
6010
6022
6024

FIG.1

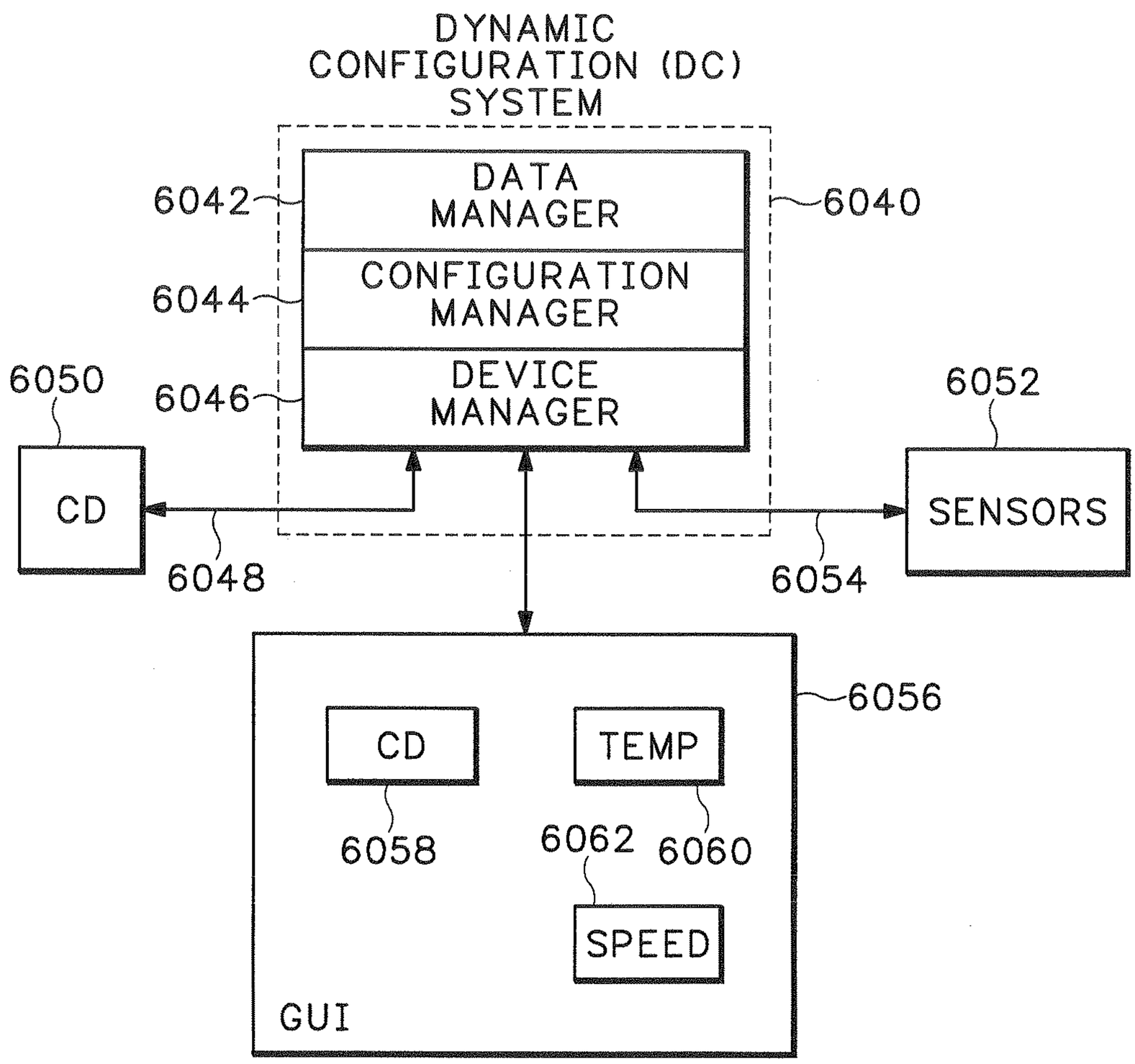
DYNAMIC
CONFIGURATION (DC)
SYSTEM
DATA
MANAGER
CONFIGURATION
MANAGER
DEVICE
MANAGER
6042
6044
6046
6040
6050
CD
6048
6052
SENSORS
6054
6056
CD
TEMP
6058
6062
6060
SPEED
GUI

FIG.2

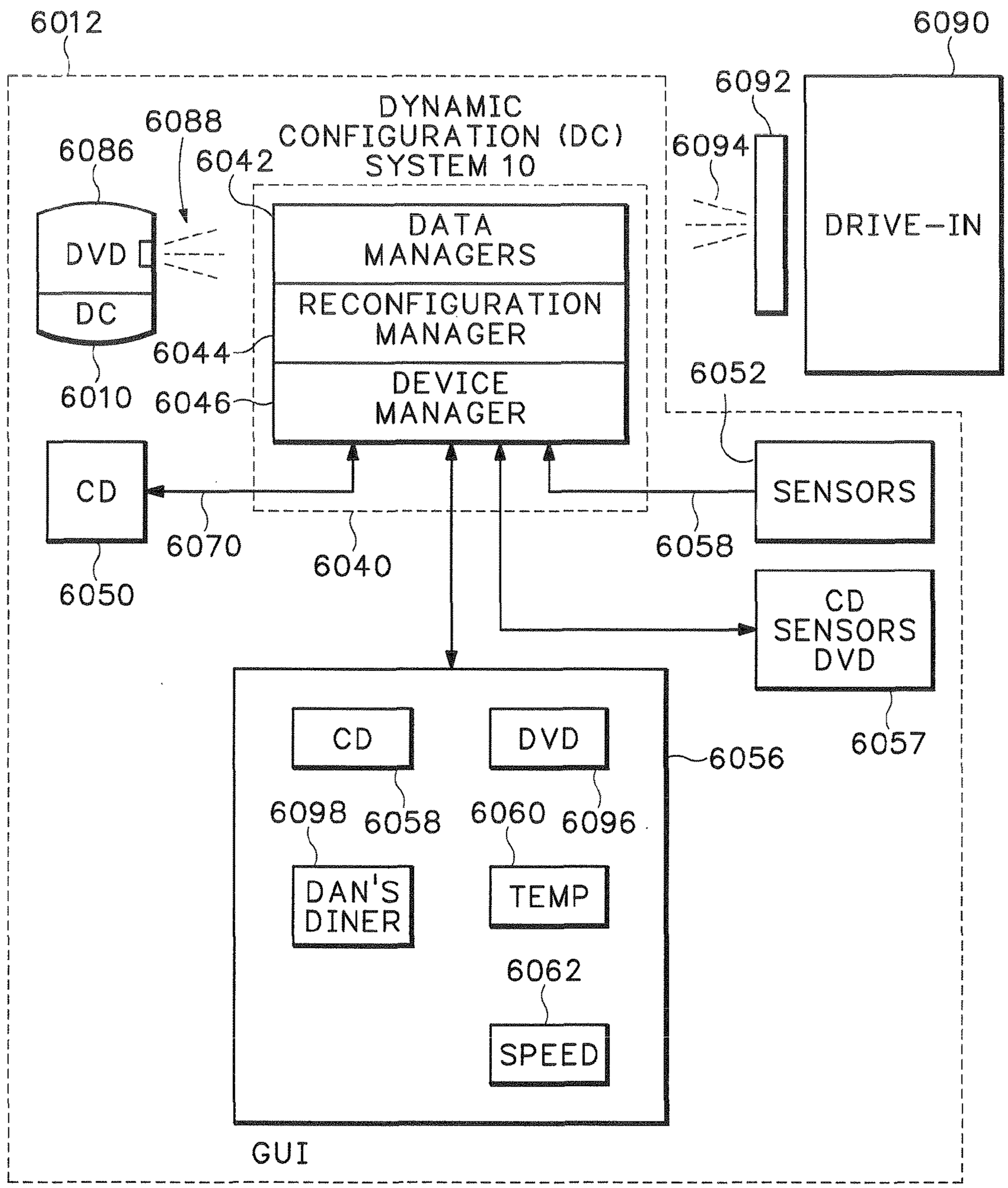
6012
6090
6092
DYNAMIC
CONFIGURATION (DC)
SYSTEM 10
6088
6086
6042
6094
DVD
DC
DATA
MANAGERS
RECONFIGURATION
MANAGER
DEVICE
MANAGER
DRIVE-IN
6044
6046
6010
6052
CD
SENSORS
6070
6040
6058
6050
CD
SENSORS
DVD
6056
6057
CD
DVD
6098
6058
6060
6096
DAN'S
DINER
TEMP
6062
SPEED
GUI

FIG.3

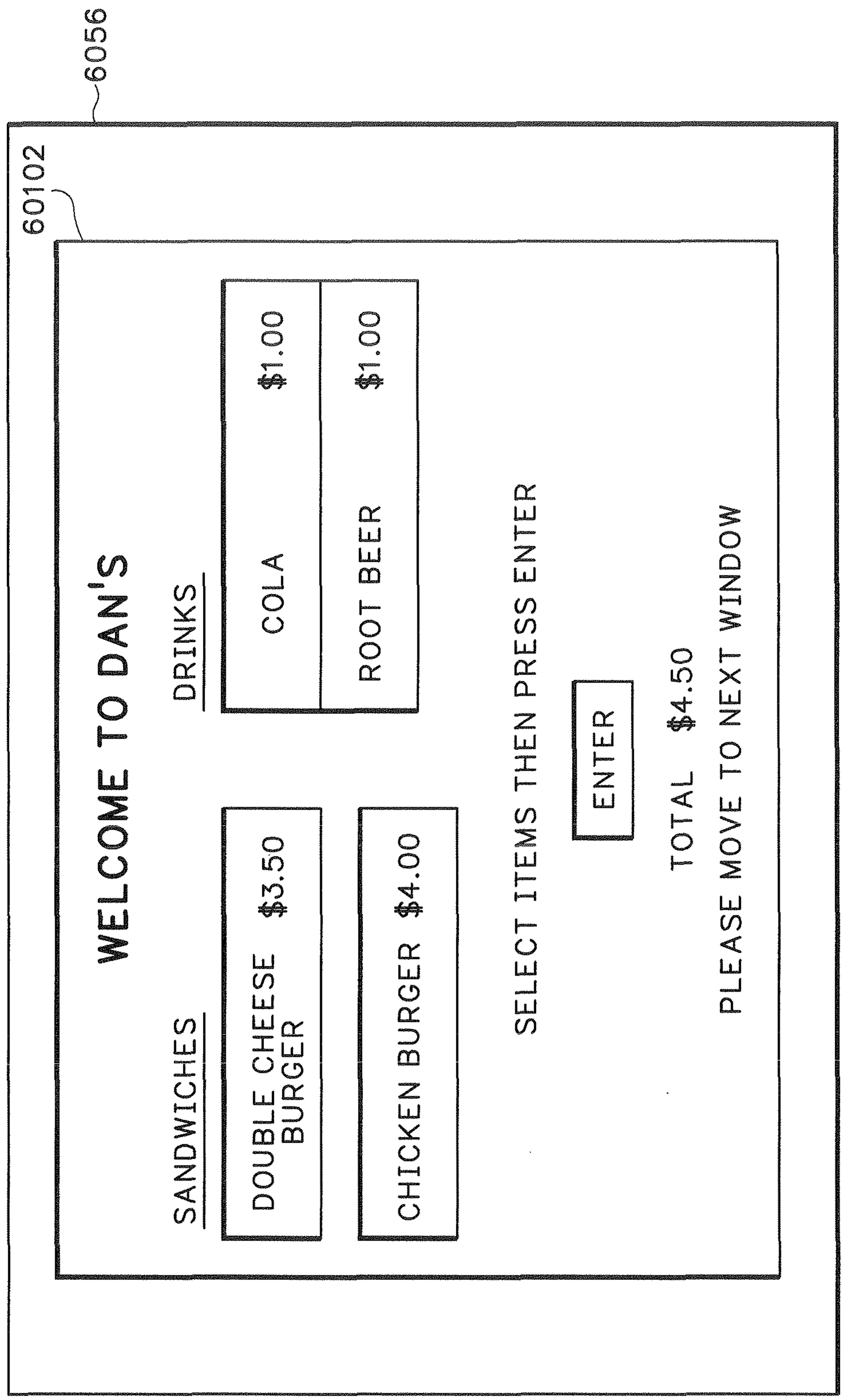
6056
60102
WELCOME TO DAN'S
SANDWICHES
DOUBLE CHEESE BURGER $3.50
CHICKEN BURGER $4.00
DRINKS
COLA $1.00
ROOT BEER $1.00
SELECT ITEMS THEN PRESS ENTER
ENTER
TOTAL $4.50
PLEASE MOVE TO NEXT WINDOW

FIG.4

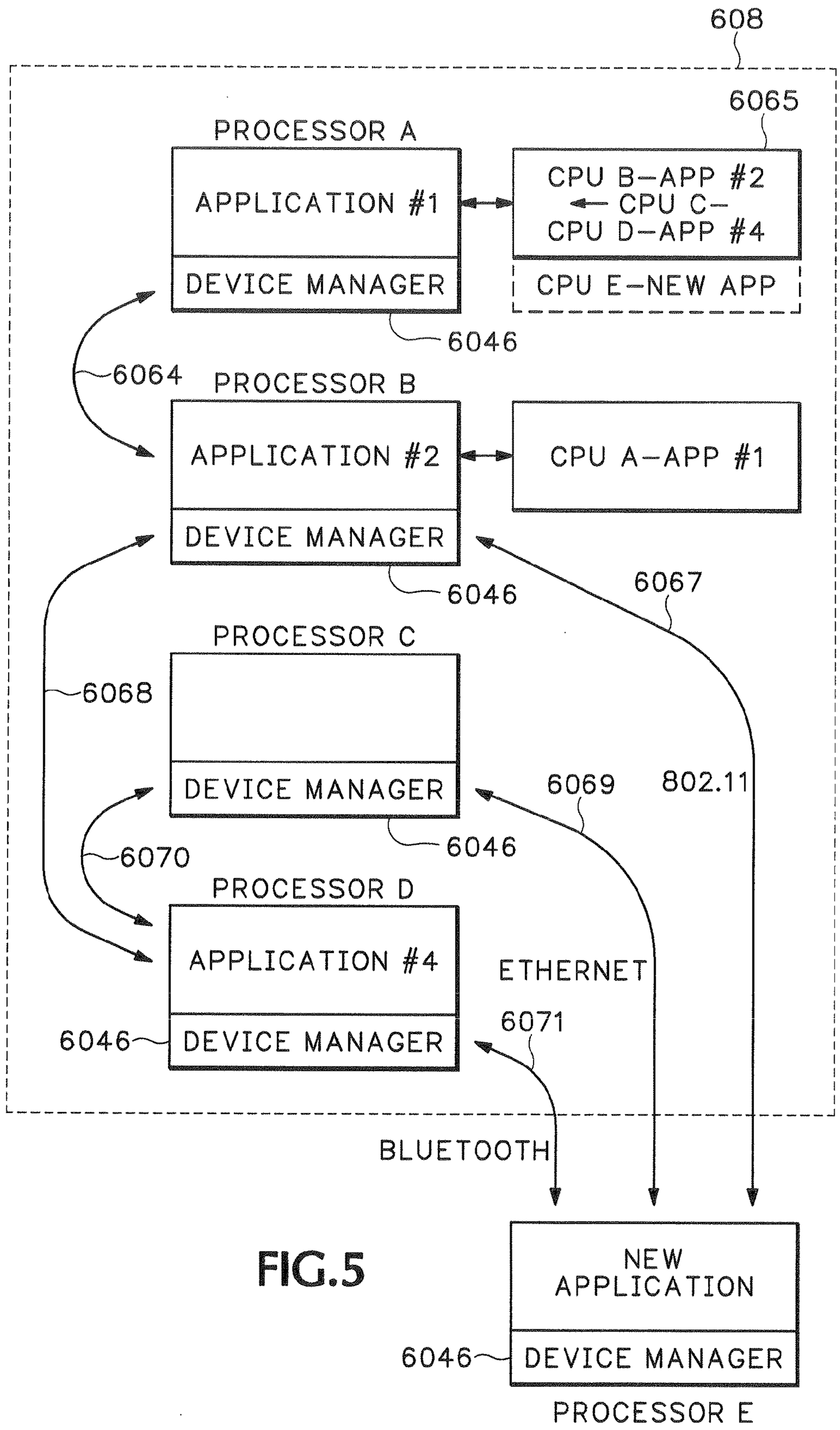
608
6065
PROCESSOR A
APPLICATION #1
CPU B–APP #2
CPU C–
CPU D–APP #4
DEVICE MANAGER
CPU E–NEW APP
6046
6064
PROCESSOR B
APPLICATION #2
CPU A–APP #1
DEVICE MANAGER
6046
6067
PROCESSOR C
6068
DEVICE MANAGER
6069
802.11
6046
6070
PROCESSOR D
APPLICATION #4
ETHERNET
6046
DEVICE MANAGER
6071
BLUETOOTH
NEW
APPLICATION
6046
DEVICE MANAGER
PROCESSOR E

FIG.5

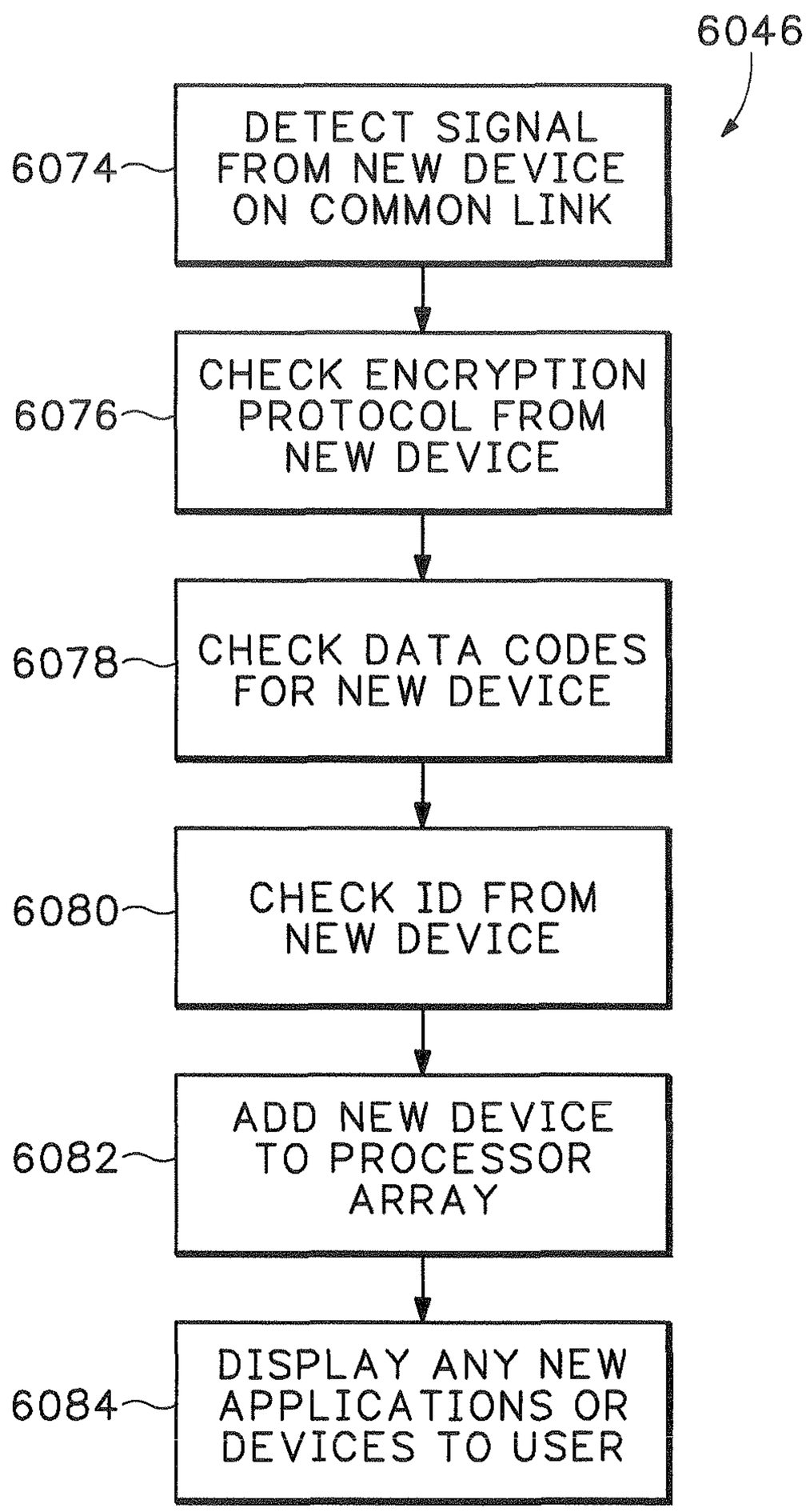
6046
6074
DETECT SIGNAL FROM NEW DEVICE ON COMMON LINK
6076
CHECK ENCRYPTION PROTOCOL FROM NEW DEVICE
6078
CHECK DATA CODES FOR NEW DEVICE
6080
CHECK ID FROM NEW DEVICE
6082
ADD NEW DEVICE TO PROCESSOR ARRAY
6084
DISPLAY ANY NEW APPLICATIONS OR DEVICES TO USER

FIG.6

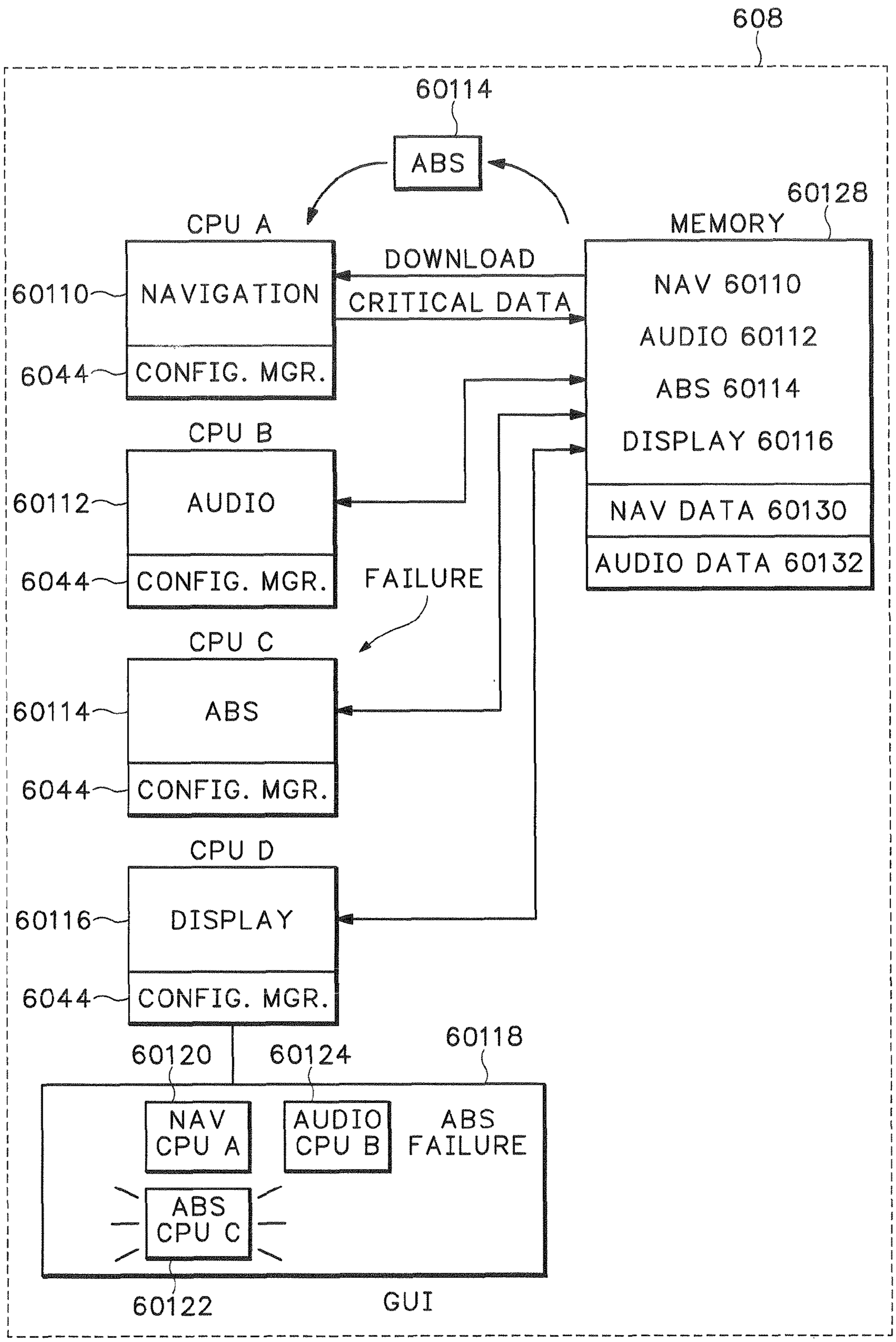
608
60114
ABS
60128
CPU A
MEMORY
DOWNLOAD
60110
NAVIGATION
CRITICAL DATA
NAV 60110
AUDIO 60112
6044
CONFIG. MGR.
ABS 60114
CPU B
DISPLAY 60116
60112
AUDIO
NAV DATA 60130
AUDIO DATA 60132
6044
CONFIG. MGR.
FAILURE
CPU C
60114
ABS
6044
CONFIG. MGR.
CPU D
60116
DISPLAY
6044
CONFIG. MGR.
60118
60120
60124
NAV
CPU A
AUDIO
CPU B
ABS
FAILURE
ABS
CPU C
60122
GUI

FIG.7

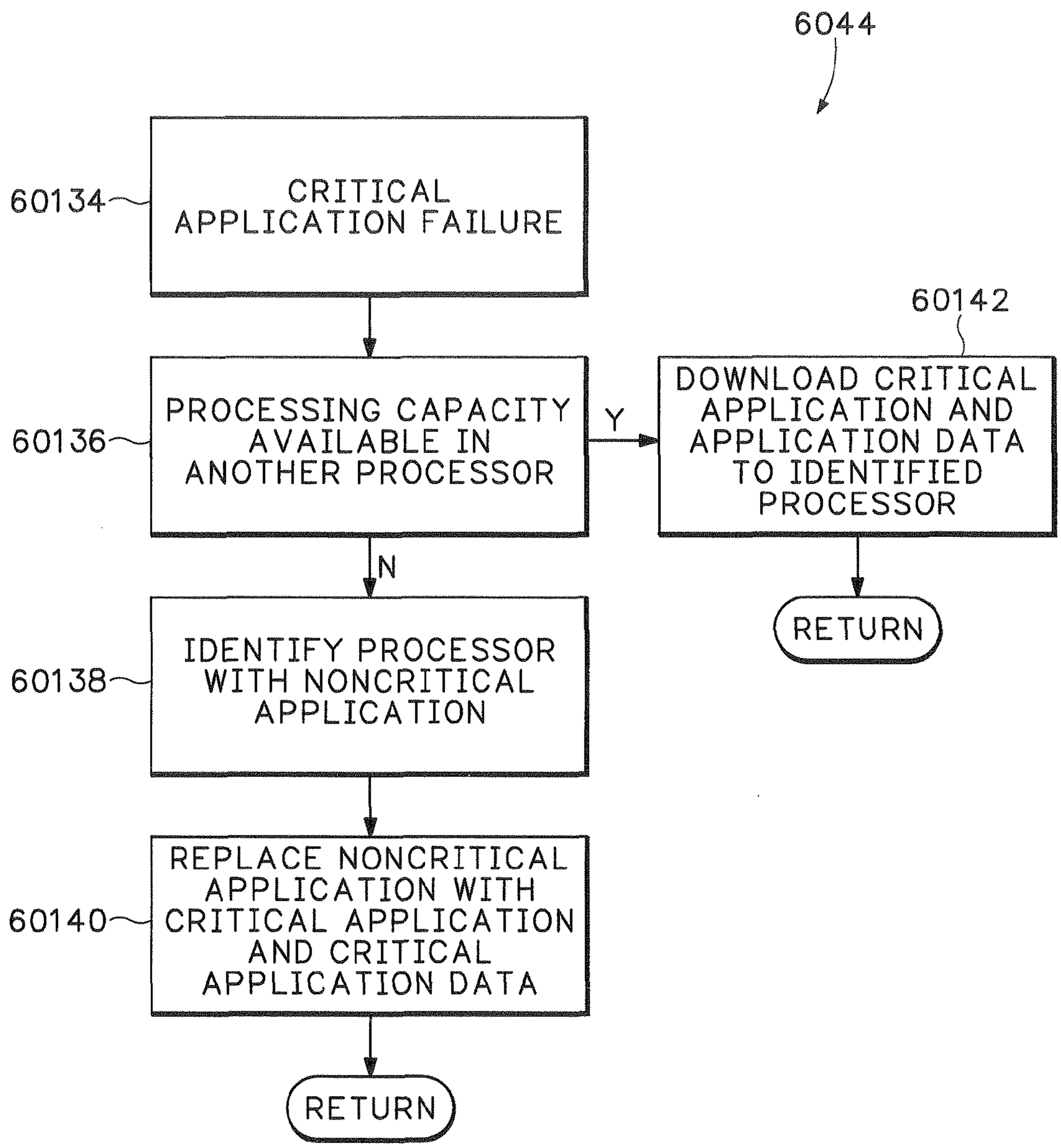
6044
60134
CRITICAL APPLICATION FAILURE
60136
PROCESSING CAPACITY AVAILABLE IN ANOTHER PROCESSOR
Y
60142
DOWNLOAD CRITICAL APPLICATION AND APPLICATION DATA TO IDENTIFIED PROCESSOR
RETURN
N
60138
IDENTIFY PROCESSOR WITH NONCRITICAL APPLICATION
60140
REPLACE NONCRITICAL APPLICATION WITH CRITICAL APPLICATION AND CRITICAL APPLICATION DATA
RETURN

FIG.8

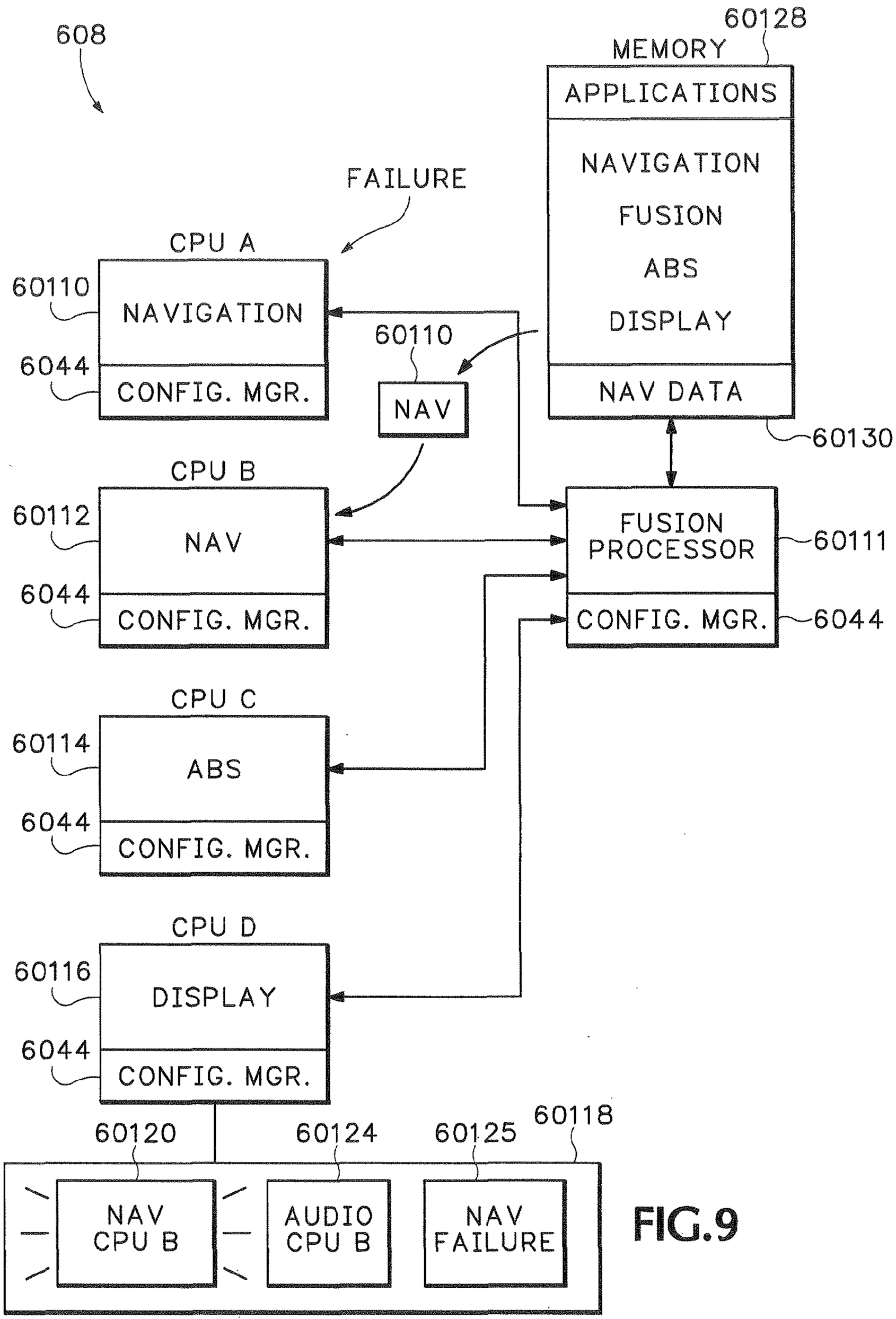
608
60128
MEMORY
APPLICATIONS
NAVIGATION
FUSION
ABS
DISPLAY
NAV DATA
60130
FAILURE
CPU A
60110
NAVIGATION
6044
CONFIG. MGR.
60110
NAV
CPU B
60112
NAV
6044
CONFIG. MGR.
FUSION
PROCESSOR
60111
CONFIG. MGR.
6044
CPU C
60114
ABS
6044
CONFIG. MGR.
CPU D
60116
DISPLAY
6044
CONFIG. MGR.
60120
60124
60125
60118
NAV
CPU B
AUDIO
CPU B
NAV
FAILURE

FIG.9

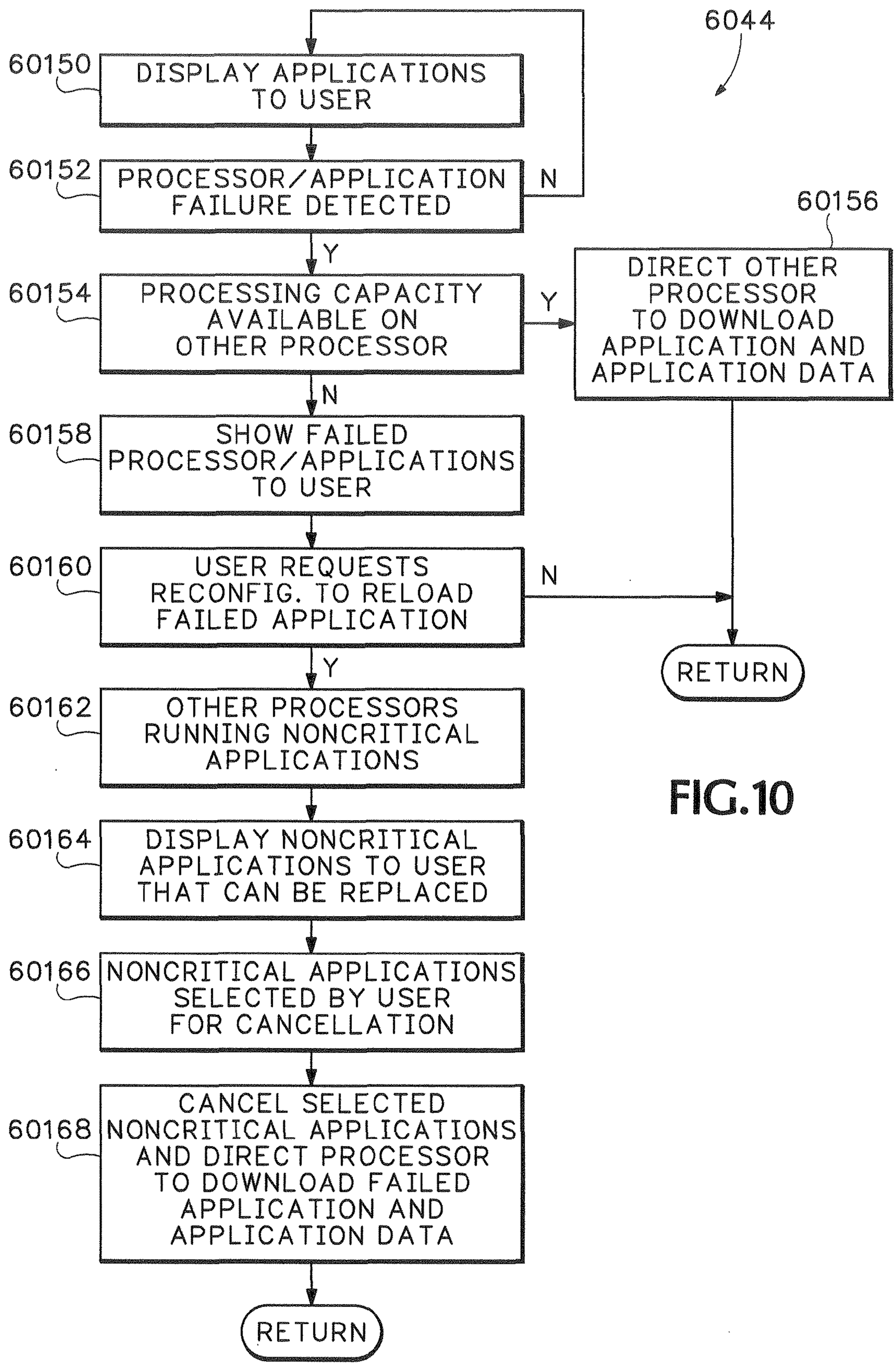
6044
60150
DISPLAY APPLICATIONS TO USER
60152
PROCESSOR/APPLICATION FAILURE DETECTED
N
Y
60154
PROCESSING CAPACITY AVAILABLE ON OTHER PROCESSOR
Y
60156
DIRECT OTHER PROCESSOR TO DOWNLOAD APPLICATION AND APPLICATION DATA
N
60158
SHOW FAILED PROCESSOR/APPLICATIONS TO USER
60160
USER REQUESTS RECONFIG. TO RELOAD FAILED APPLICATION
N
RETURN
Y
60162
OTHER PROCESSORS RUNNING NONCRITICAL APPLICATIONS
60164
DISPLAY NONCRITICAL APPLICATIONS TO USER THAT CAN BE REPLACED
60166
NONCRITICAL APPLICATIONS SELECTED BY USER FOR CANCELLATION
60168
CANCEL SELECTED NONCRITICAL APPLICATIONS AND DIRECT PROCESSOR TO DOWNLOAD FAILED APPLICATION AND APPLICATION DATA
RETURN

FIG.10

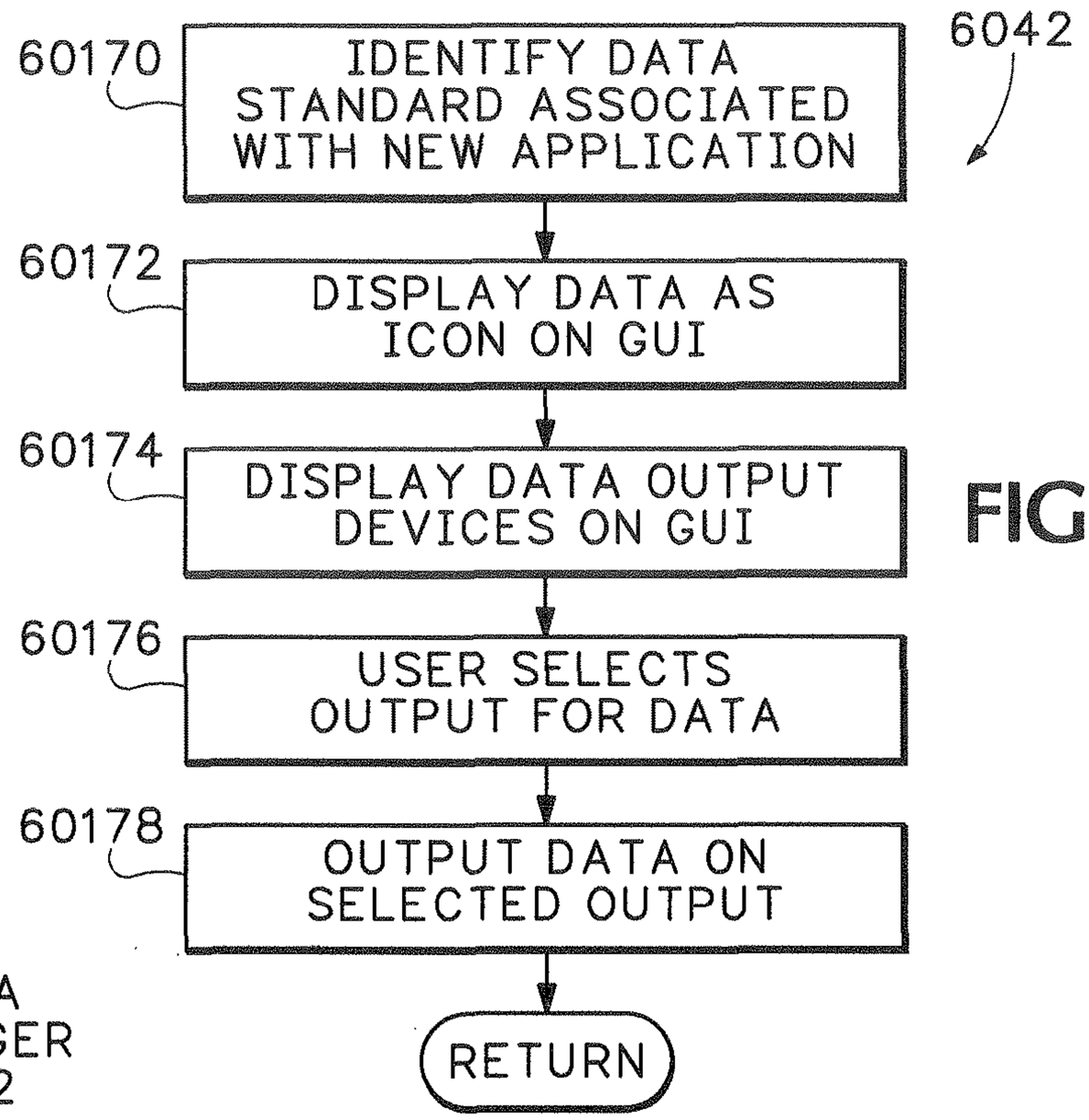
6042
60170
IDENTIFY DATA STANDARD ASSOCIATED WITH NEW APPLICATION
60172
DISPLAY DATA AS ICON ON GUI
60174
DISPLAY DATA OUTPUT DEVICES ON GUI
60176
USER SELECTS OUTPUT FOR DATA
60178
OUTPUT DATA ON SELECTED OUTPUT
RETURN

FIG.11

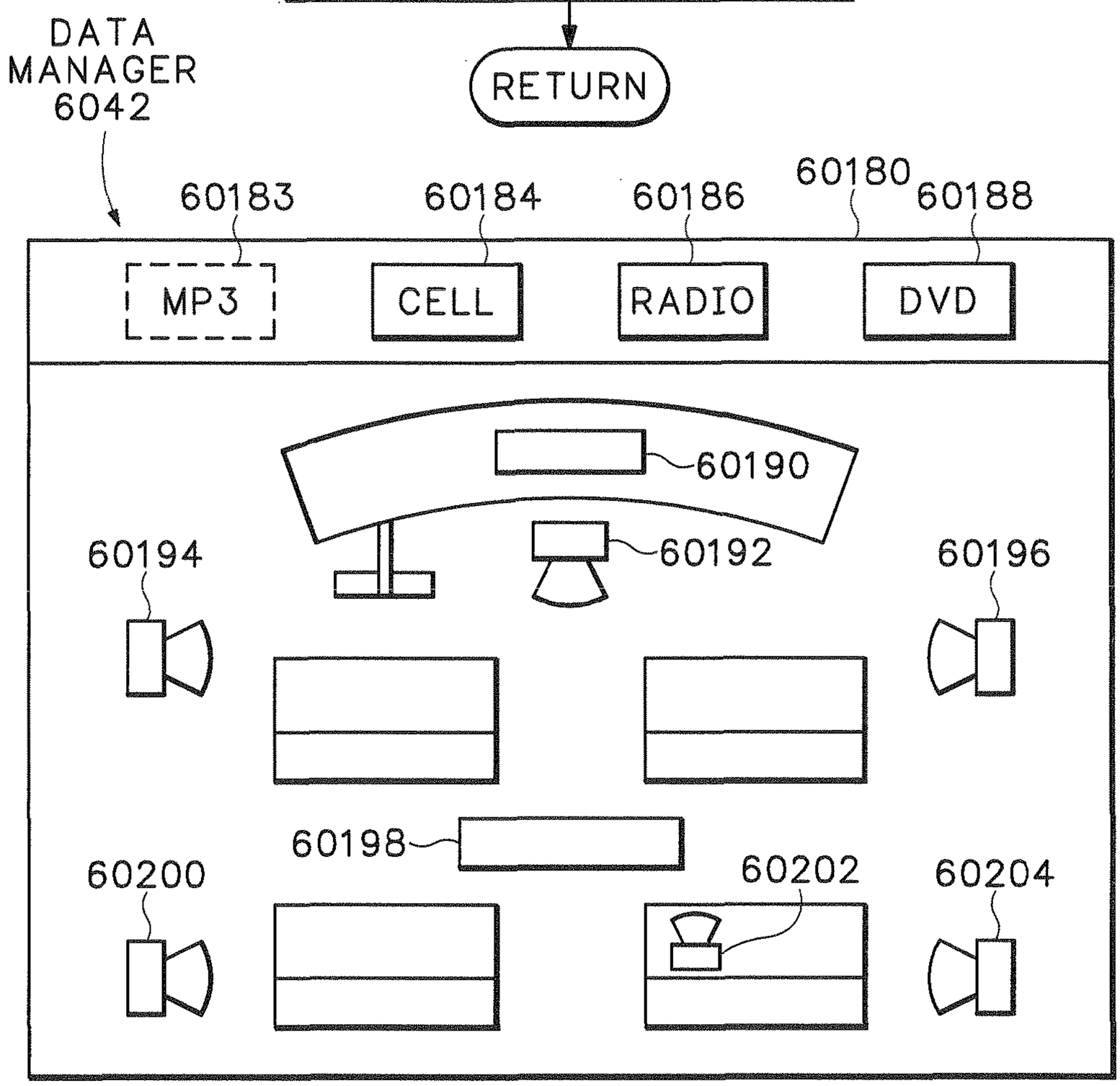
DATA MANAGER 6042
60183
60184
60186
60180
60188
MP3
CELL
RADIO
DVD
60190
60194
60192
60196
60198
60200
60202
60204

FIG.12

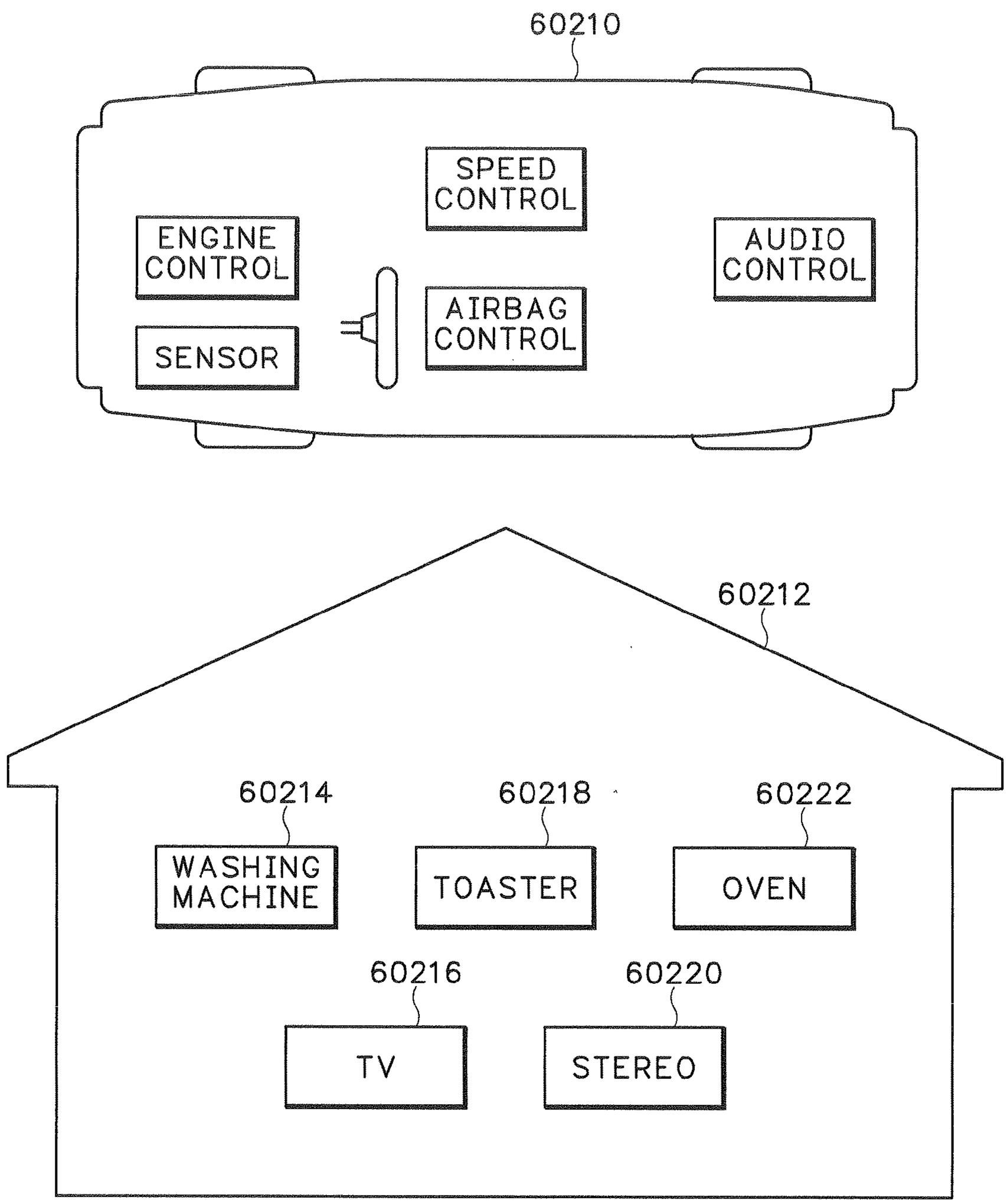
60210
SPEED CONTROL
ENGINE CONTROL
AUDIO CONTROL
AIRBAG CONTROL
SENSOR
60212
60214
WASHING MACHINE
60218
TOASTER
60222
OVEN
60216
TV
60220
STEREO

FIG.13

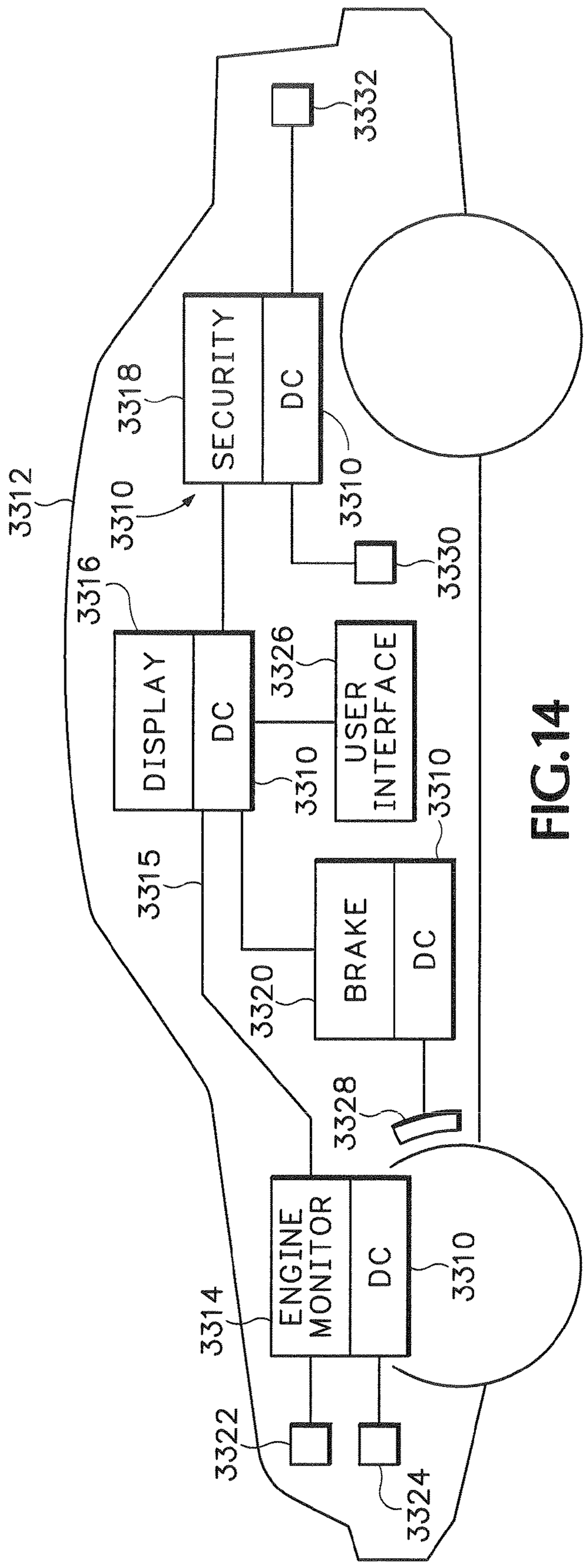
3332
SECURITY
DC
3318
3312
3310
3310
3330
3316
DISPLAY
DC
3326
USER INTERFACE
3310
3310
3315
BRAKE
DC
3320
3328
ENGINE MONITOR
DC
3314
3310
3322
3324

FIG.14

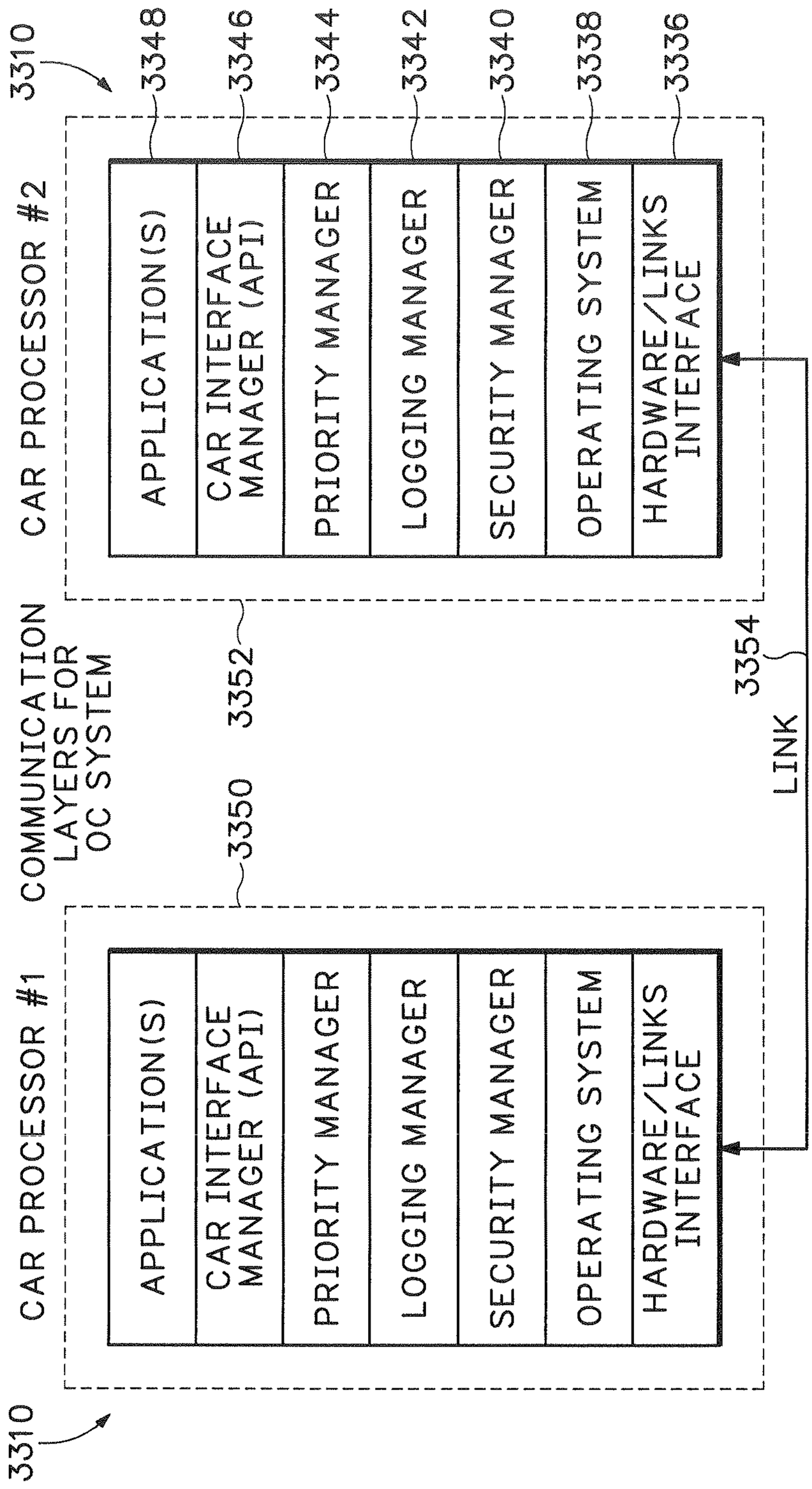
3310
CAR PROCESSOR #2
APPLICATION(S)
CAR INTERFACE MANAGER (API)
PRIORITY MANAGER
LOGGING MANAGER
SECURITY MANAGER
OPERATING SYSTEM
HARDWARE/LINKS INTERFACE
3348
3346
3344
3342
3340
3338
3336
COMMUNICATION LAYERS FOR OC SYSTEM
3352
3350
3354
LINK
CAR PROCESSOR #1
APPLICATION(S)
CAR INTERFACE MANAGER (API)
PRIORITY MANAGER
LOGGING MANAGER
SECURITY MANAGER
OPERATING SYSTEM
HARDWARE/LINKS INTERFACE
3310

FIG.15

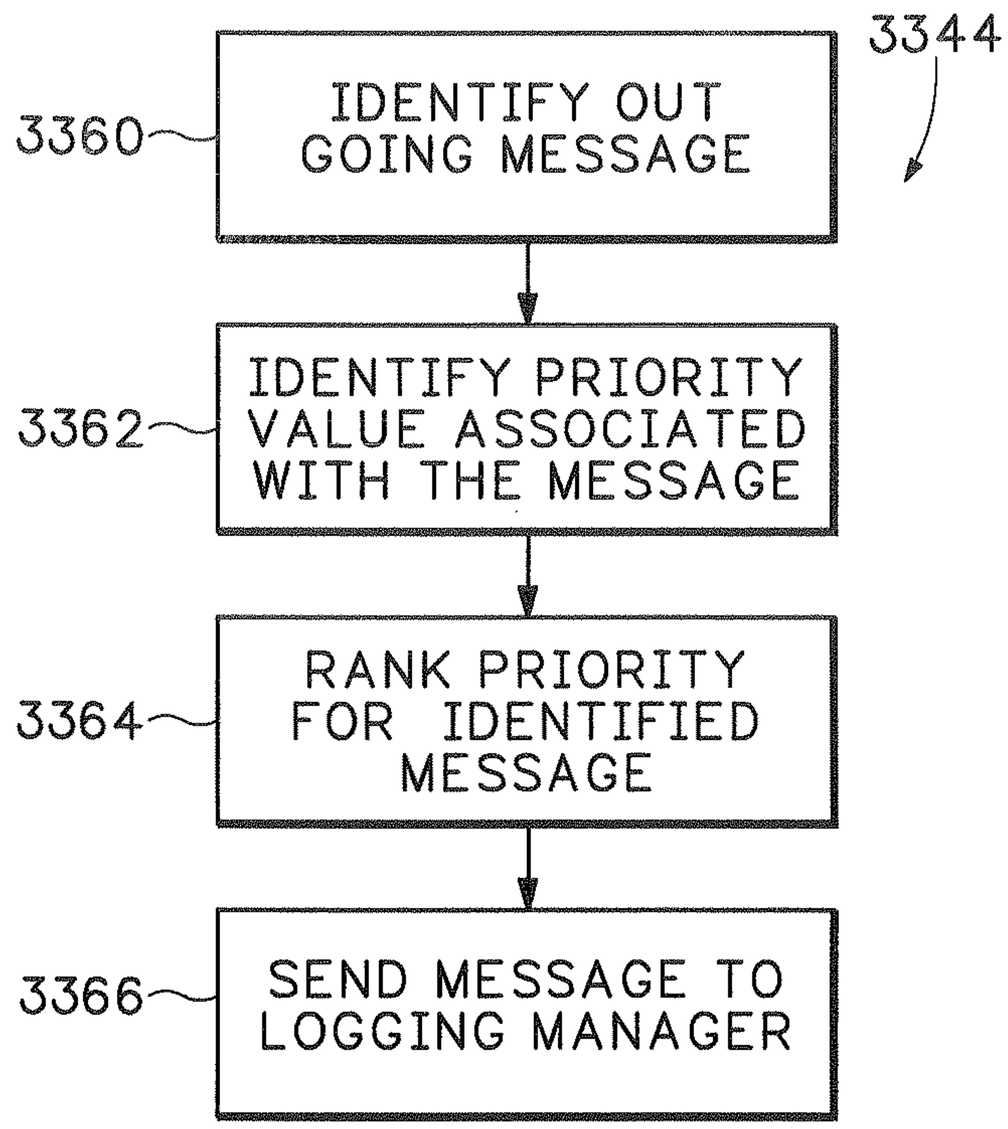
3344
3360
IDENTIFY OUT GOING MESSAGE
3362
IDENTIFY PRIORITY VALUE ASSOCIATED WITH THE MESSAGE
3364
RANK PRIORITY FOR IDENTIFIED MESSAGE
3366
SEND MESSAGE TO LOGGING MANAGER

FIG.16

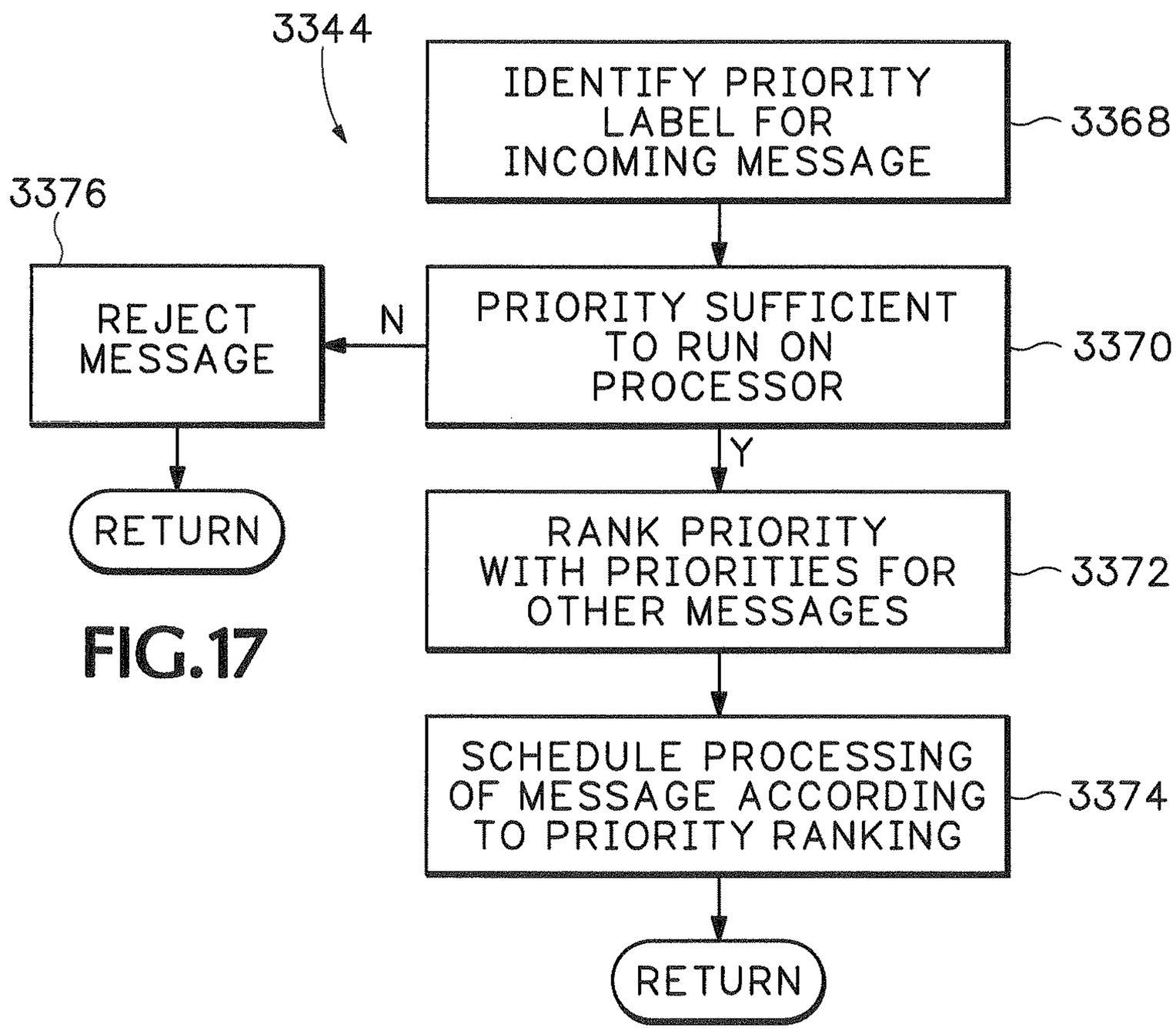
3344
IDENTIFY PRIORITY LABEL FOR INCOMING MESSAGE
3368
3376
REJECT MESSAGE
N
PRIORITY SUFFICIENT TO RUN ON PROCESSOR
3370
Y
RETURN
RANK PRIORITY WITH PRIORITIES FOR OTHER MESSAGES
3372
SCHEDULE PROCESSING OF MESSAGE ACCORDING TO PRIORITY RANKING
3374
RETURN

FIG.17

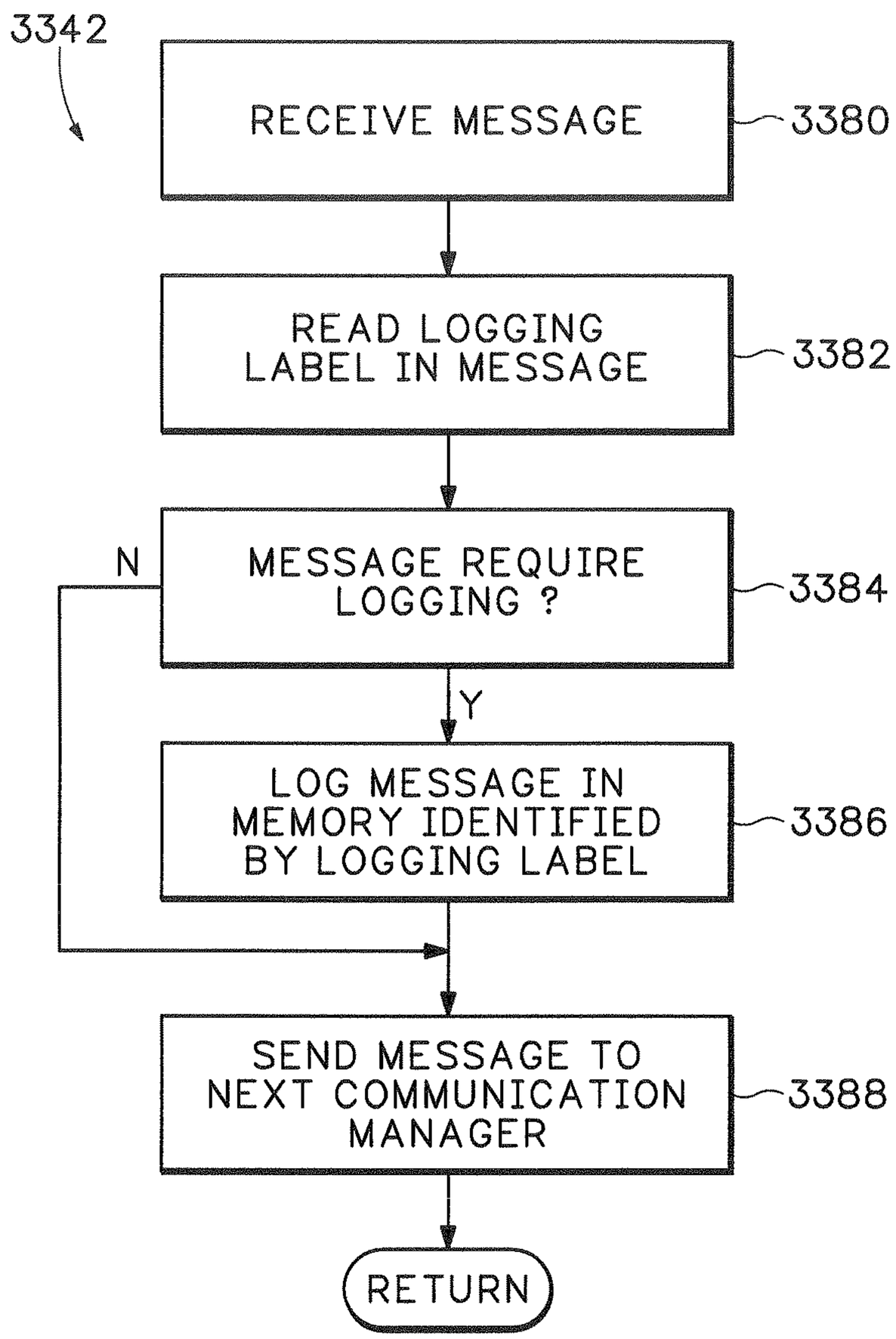
3342
RECEIVE MESSAGE
3380
READ LOGGING LABEL IN MESSAGE
3382
N
MESSAGE REQUIRE LOGGING ?
3384
Y
LOG MESSAGE IN MEMORY IDENTIFIED BY LOGGING LABEL
3386
SEND MESSAGE TO NEXT COMMUNICATION MANAGER
3388
RETURN

FIG.18

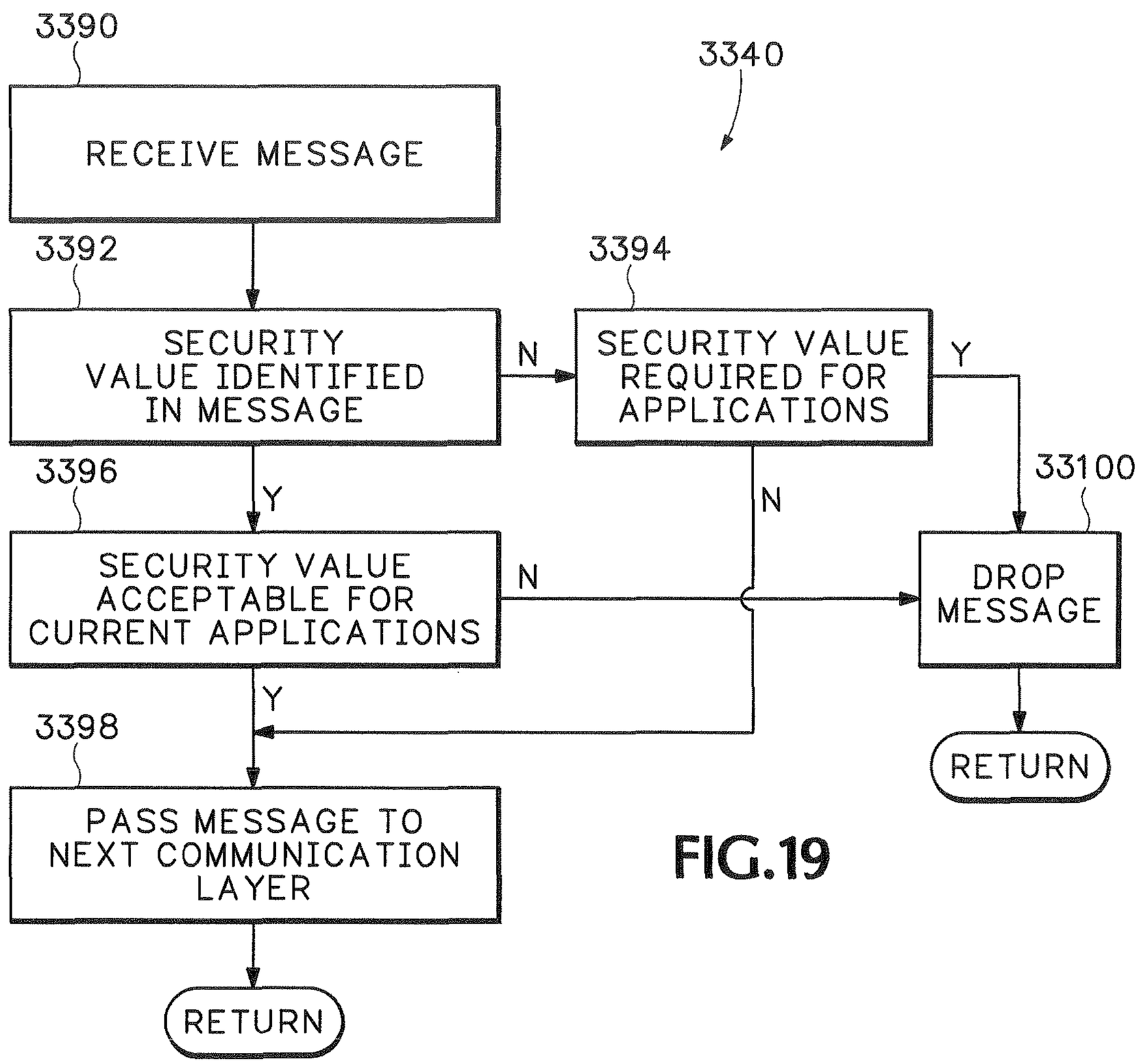
3390
RECEIVE MESSAGE
3340
3392
SECURITY VALUE IDENTIFIED IN MESSAGE
N
3394
SECURITY VALUE REQUIRED FOR APPLICATIONS
Y
3396
Y
N
33100
SECURITY VALUE ACCEPTABLE FOR CURRENT APPLICATIONS
N
DROP MESSAGE
Y
3398
RETURN
PASS MESSAGE TO NEXT COMMUNICATION LAYER
RETURN

FIG.19

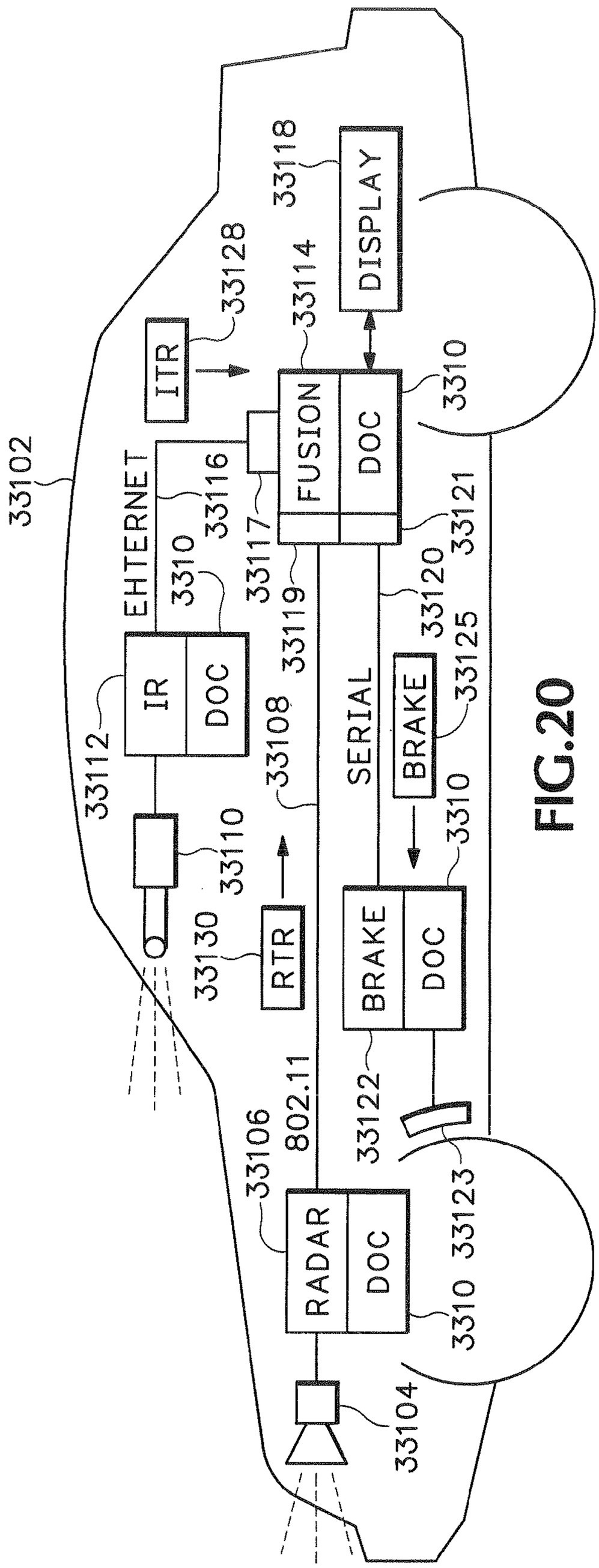
33102
33104
33106
RADAR
DOC
3310
802.11
33108
33110
33112
IR
DOC
33114
33116
EHTERNET
33117
33118
DISPLAY
FUSION
DOC
33119
33120
33121
33122
33123
33125
BRAKE
SERIAL
BRAKE
DOC
33128
ITR
33130
RTR

FIG.20

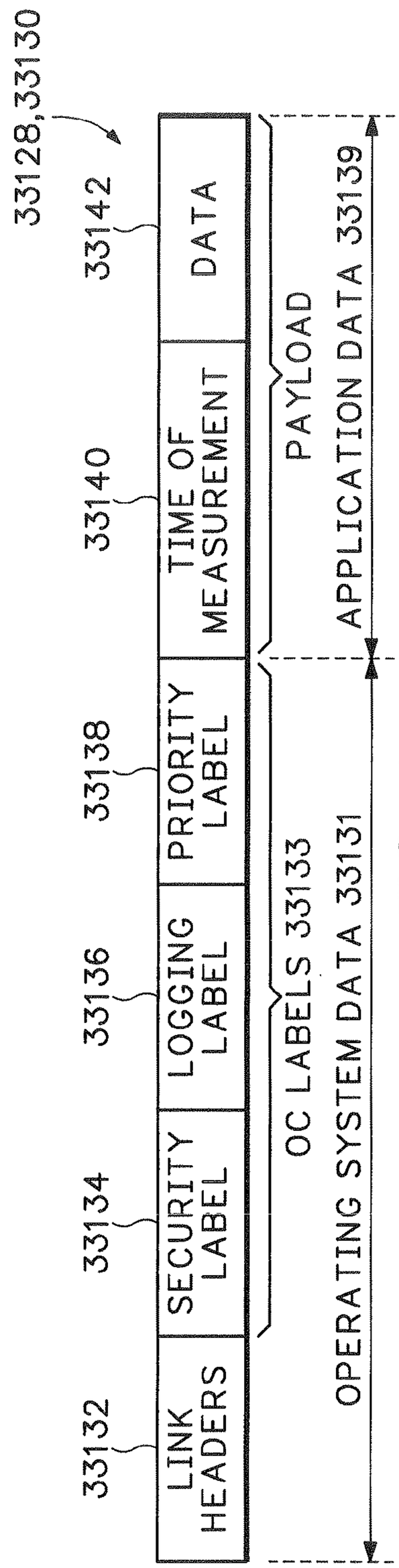
33128,33130
33132
LINK HEADERS
33134
SECURITY LABEL
33136
LOGGING LABEL
33138
PRIORITY LABEL
33140
TIME OF MEASUREMENT
33142
DATA
PAYLOAD
APPLICATION DATA 33139
OC LABELS 33133
OPERATING SYSTEM DATA 33131

FIG.21

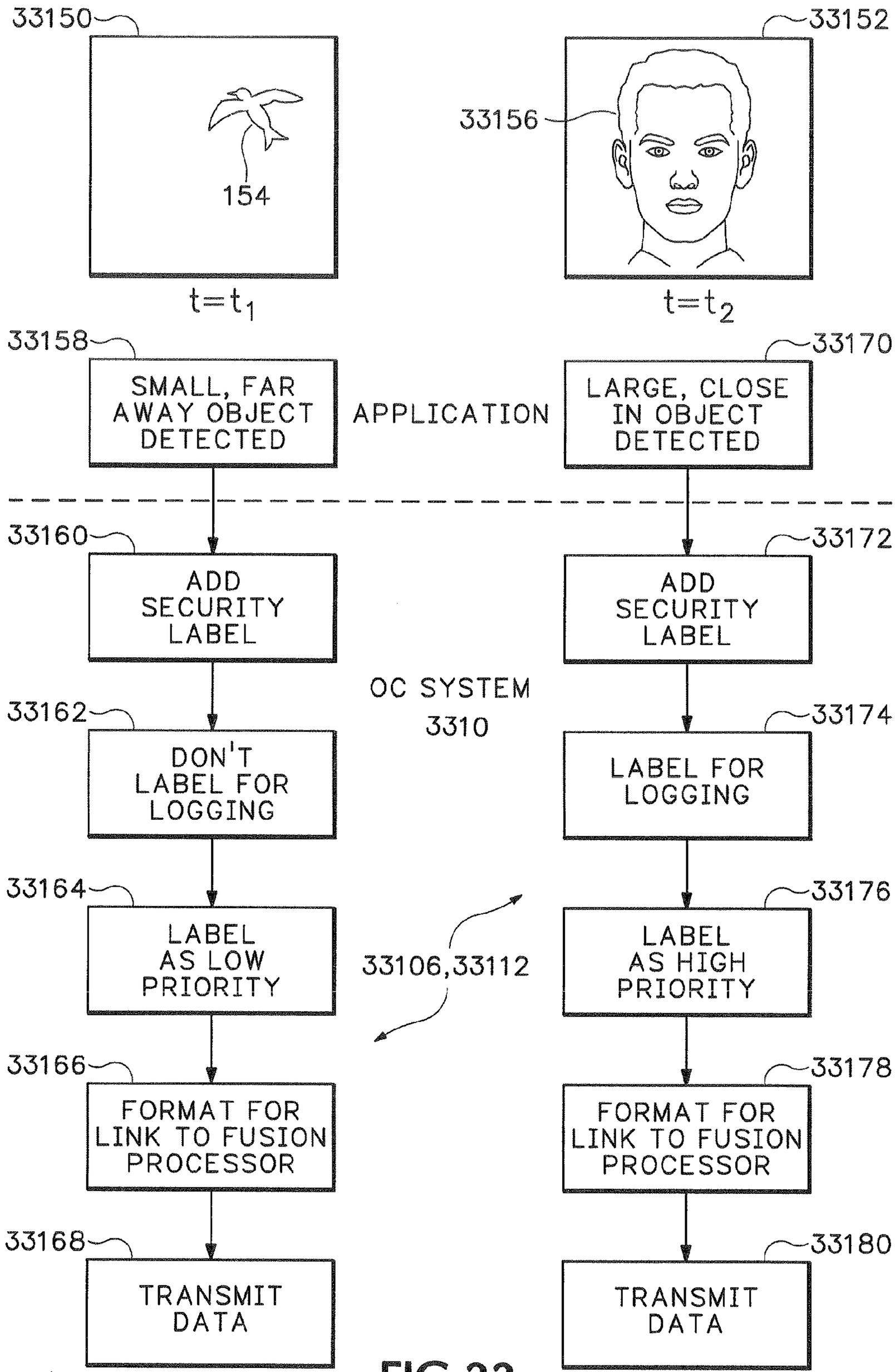
33150
154
t=t1
33152
33156
t=t2
33158
SMALL, FAR AWAY OBJECT DETECTED
APPLICATION
33170
LARGE, CLOSE IN OBJECT DETECTED
33160
ADD SECURITY LABEL
33172
ADD SECURITY LABEL
OC SYSTEM 3310
33162
DON'T LABEL FOR LOGGING
33174
LABEL FOR LOGGING
33164
LABEL AS LOW PRIORITY
33106,33112
33176
LABEL AS HIGH PRIORITY
33166
FORMAT FOR LINK TO FUSION PROCESSOR
33178
FORMAT FOR LINK TO FUSION PROCESSOR
33168
TRANSMIT DATA
33180
TRANSMIT DATA

FIG.22

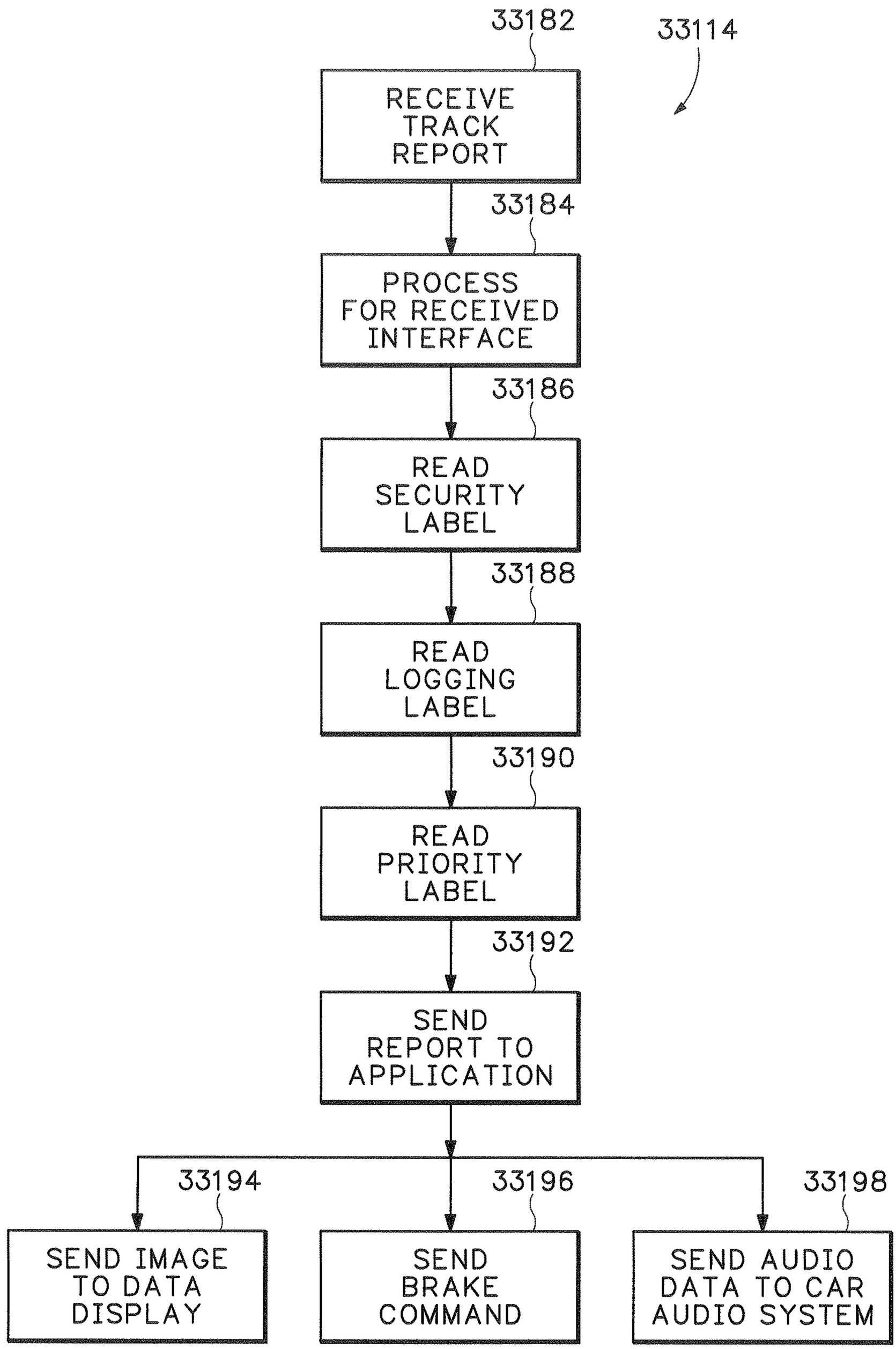
33114
33182
RECEIVE TRACK REPORT
33184
PROCESS FOR RECEIVED INTERFACE
33186
READ SECURITY LABEL
33188
READ LOGGING LABEL
33190
READ PRIORITY LABEL
33192
SEND REPORT TO APPLICATION
33194
SEND IMAGE TO DATA DISPLAY
33196
SEND BRAKE COMMAND
33198
SEND AUDIO DATA TO CAR AUDIO SYSTEM

FIG.23

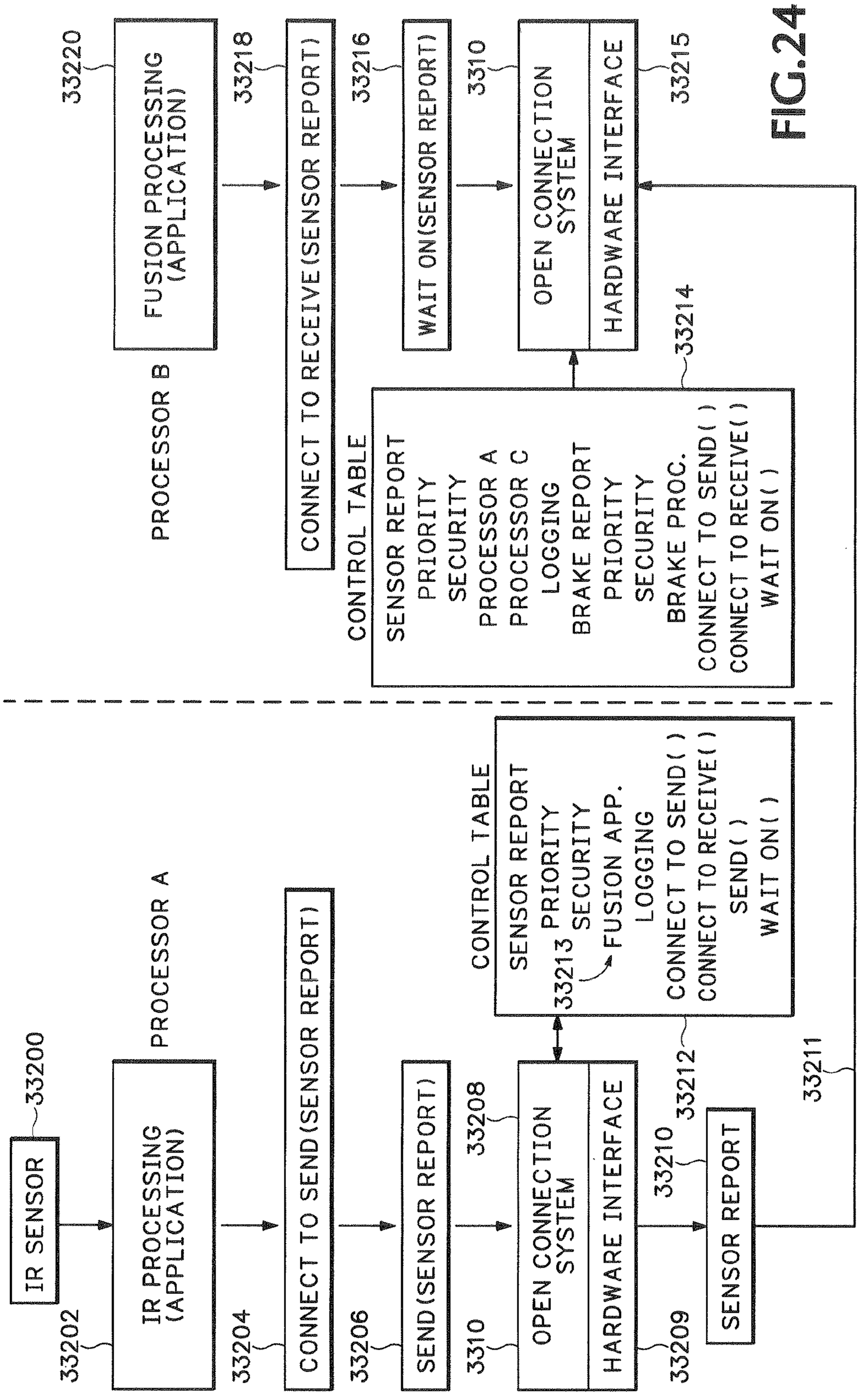
PROCESSOR B
FUSION PROCESSING (APPLICATION)
33220
CONNECT TO RECEIVE(SENSOR REPORT)
33218
WAIT ON(SENSOR REPORT)
33216
OPEN CONNECTION SYSTEM
HARDWARE INTERFACE
3310
33215
33214
CONTROL TABLE
SENSOR REPORT
PRIORITY
SECURITY
PROCESSOR A
PROCESSOR C
LOGGING
BRAKE REPORT
PRIORITY
SECURITY
BRAKE PROC.
CONNECT TO SEND( )
CONNECT TO RECEIVE( )
WAIT ON( )
PROCESSOR A
IR SENSOR
33200
IR PROCESSING (APPLICATION)
33202
CONNECT TO SEND(SENSOR REPORT)
33204
SEND(SENSOR REPORT)
33206
OPEN CONNECTION SYSTEM
HARDWARE INTERFACE
3310
33208
33209
SENSOR REPORT
33210
33212
33211
CONTROL TABLE
SENSOR REPORT
PRIORITY
SECURITY
FUSION APP.
LOGGING
CONNECT TO SEND( )
CONNECT TO RECEIVE( )
SEND( )
WAIT ON( )
33213

FIG.24

METHOD AND APPARATUS FOR A TASK PRIORITY PROCESSING SYSTEM

RELATED FILINGS

This application is a Continuation of patent application Ser. No. 12/483,214 filed Jun. 11, 2009 Titled—METHOD AND APPARATUS FOR DYNAMIC CONFIGURATION OF MULTIPROCESSOR SYSTEM, which is a continuation of U.S. Pat. No. 7,778,739 Issued Jul. 28, 2010 Titled—METHOD AND APPARATUS FOR DYNAMIC CONFIGURATION OF MULTIPROCESSOR SYSTEM, which is a continuation of U.S. Pat. No. 7,146,260 Issued Dec. 5, 2006 Titled—METHOD AND APPARATUS FOR DYNAMIC CONFIGURATION OF MULTIPROCESSOR SYSTEM and this application incorporates by reference U.S. Pat. No. 6,629,033, Issued Sep. 30, 2003 Titled—OPEN COMMUNICATION SYSTEM FOR REAL-TIME MULTIPROCESSOR APPLICATIONS.

REFERENCES CITED

U.S. Patent Documents

U.S. Pat. No. 4,829,434 May 1989; Karmel et al.
U.S. Pat. No. 5,581,462 December 1996; Rogers
U.S. Pat. No. 5,786,998 July 1998; Neeson et al.
U.S. Pat. No. 6,161,071 December 2000; Shuman et al.
U.S. Pat. No. 6,181,994 January 2001; Colson et al.
U.S. Pat. No. 6,182,006 January 2001; Meek
U.S. Pat. No. 6,243,450 June 2001; Jansen et al.
U.S. Pat. No. 6,505,100 January 2003; Stuempfle et al.
U.S. Pat. No. 6,622,083 September 2003; Knockeart et al.

Foreign Patent Documents

WO96/24229 August, 1996 WO
WO99/08436 February, 1999 WO
WO99/57662 November, 1999 WO
WO99/65183 December, 1999 WO
WO01/30061 April, 2001 WO
WO01/58110 August, 2001 WO

Other References

Product description of Raytheon RT Secure, "Embedded Hard Real-Time Secure Operating System", Copyright 2000, pp. 1-2. cited by other.

Product description of Raytheon RT Secure, Copyright 2001, pp. 1-2. cited by other.

Product description of Raytheon RT Secure, "Development Environment", Copyright 2001, pp. 1-2. cited by other.

Product description of Raytheon Electronic Systems (ES), Copyright 2002, pp. 1-2. cited by other.

H. Chung, L. Ojeda, and J. Borenstein, "Sensor Fusion for Mobile Robot Dead-reckoning with a Precision-calibrated Fiber Optic Gyroscope", 2001 IEEE International Conference on Robotics and Automation, Seoul, Korea, May 21-26, pp. 1-6. cited by other.

A. Das, R. Fierro, V. Kumar, J. Ostrowski, J. Spletzer, and C. Taylor, "A Framework for Vision Based Formation Control", IEEE Transactions on Robotics and Automation, vol. XX, No. Y, 2001, pp. 1-13. cited by other.

J. Takezaki, N. Ueki, T. Minowa, H. Kondoh, "Support System for Safe Driving—A Step Toward ITS Autonomous Driving—", Hitachi Review, vol. 49, No. 3, 2000, pp. 1-8. cited by other.

S. G. Goodridge, "Multimedia Sensor Fusion for Intelligent Camera Control and Human-Computer Interaction", Dissertation submitted to the Graduate Faculty of North Carolina State University in partial fulfillment of the requirements for the degree of Doctor of Philosophy in Electrical Engineering, Raleigh, N.C., 1997, pp. 1-5. cited by other.

M. Chantler, G. Russel, and R. Dunbar, "Probabilistic Sensor Fusion for Reliable Workspace Sensing", pp. 1-14. cited by other.

ISIS Project: Sensor Fusion, Linkoping University Division of Automatic Control and Communication Systems in cooperation with SAAB (Dynamics and Aircraft), 18 pages. cited by other.

Hitachi Automated Highway System (AHS), Automotive Products, Hitachi, Ltd., Copyright 1994-2002, 8 pages. cited by other.

Vehicle Dynamics Lab, University of California, Berkeley, funded by BMW, current members: D. Caveney and B. Feldman, "Adaptive Cruise Control", 17 pages. cited by other.

Counterair: The Cutting Edge, Ch. 2 "The Evolutionary Trajectory The Fighter Pilot-Here to Stay?" AF2025 v3c8-2, December 1996, pp. 1-7. cited by other.

Counterair: The Cutting Edge, Ch. 4 "The Virtual Trajectory Air Superiority without an "Air" Force?" AF2025 v3c8-4, December 1996, pp. 1-12. cited by other.

TNO FEL Annual Review 1998: Quality works, 16 pages. cited by other.

Boeing News Release, "Boeing Demonstrates JSF Avionics Multi-Sensor Fusion", Seattle, Wash., May 9, 2000, pp. 1-2. cited by other.

Boeing Statement, "Chairman and CEO Phil Condit on the JSF Decision", Washington, D.C., Oct. 26, 2001, pp. 1-2. cited by other.

Ada 95 Transition Support—Lessons Learned, Sections 3, 4, and 5, CACI, Inc.-Federal, Nov. 15, 1996, 14 pages. cited by other.

Joint Strike Fighter Terrain Databaste, ets-news.com "Simulator Solutions" 2002, 3 pages. cited by other.

MSRC Redacted Proposal, 3.0 Architecture Development, pp. 1-43. cited by other.

Powerpoint Presentation by Robert Allen—Boeing Phantom Works entitled "Real-Time Embedded Avionics System Security and COTS Operating Systems", Open Group Real-Time Forum, Jul. 18, 2001, 16 pages. cited by other.

Green Hills Software, Inc., "The AdaMULTI 2000 Integrated Development Environment", Copyright 2002, 7 pages. cited by other.

Luttge, Karsten: "E-Charging API: Outsource Charging to a Payment Service Provider"; IEEE; 2001 (pp. 216-222). cited by other.

BACKGROUND

Cars include many different electromechanical and electronic applications. Examples include braking systems, electronic security systems, radios, Compact Disc (CD) players, internal and external lighting systems, temperature control systems, locking systems, seat adjustment systems, speed control systems, mirror adjustment systems, directional indicators, etc. Generally the processors that control these different car systems do not talk to each other. For example, the car radio does not communicate with the car heating system or the car braking system. This means that each one of these car systems operate independently and do not talk to the other car systems. For example, separate processors and separate user interfaces are required for the car temperature control system

and for the car audio system. Many of these different car processors may be underutilized since they are only used intermittently.

Even when multiple processors in the car do talk to each other, they are usually so tightly coupled together that it is impossible to change any one of these processors without disrupting all of the systems that are linked together. For example, some cars may have a dashboard interface that controls both internal car temperature and a car radio. The car radio cannot be replaced with a different model and still work with the dashboard interface and the car temperature controller.

Integration of new systems into a car is also limited. Car systems are designed and selected well before the car is ever built. A custom wiring harness is then designed to connect only those car systems selected for the car. A car owner cannot incorporate new systems into the existing car. For example, a car may not originally come with a navigation system. An after market navigation system from another manufacturer cannot be integrated into the existing car.

Because after market devices can not be integrated into car control and interface systems, it is often difficult for the driver to try and operate these after market devices. For example, the car driver has to operate the after market navigation system from a completely new interface, such as the keyboard and screen of a laptop computer. The driver then has to operate the laptop computer not from the front dashboard of the car, but from the passenger seat of the car. This makes many after market devices both difficult and dangerous to operate while driving.

Cars include many different electro-mechanical and electronic systems. Examples include braking systems, electronic security systems, radios, Compact Disc (CD) players, internal and external lighting systems, temperature control systems, locking systems, seat adjustment systems, speed control systems, mirror adjustment systems, directional indicators, etc. Generally the processors that control these different car systems do not talk to each other. For example, the car radio does not communicate with the car heating system or the car braking system. This means that each one of these car systems has to provide a separate standalone operating system. For example, separate processors and separate user interfaces are required for the car temperature control system and for the car audio system. Many of these different car processors may be underutilized since they are only used intermittently.

Even when some processors in the car do talk to each other, they are usually so tightly coupled together that it is impossible to change any one of these processors without disrupting all of the systems that are linked together. For example, some cars may have an interface on the dashboard that controls both internal car temperature and a car radio. The car radio cannot be replaced with a different model and still work with the dashboard interface and the car temperature controller.

Integration of new systems into a car is also limited. Car systems are designed and selected well before the car is ever built. A custom wiring harness is then designed to connect all the car systems selected for the car. A car owner can not later incorporate new systems into the existing car. For example, a car may not originally come with a car navigation system. An after market navigation system from another manufacturer cannot be integrated into the car.

Because after market devices can not be integrated into car control and interface systems, it is often difficult for the driver to try and operate these after market devices. For example, the car driver has to operate the after market navigation system from a completely new interface, such as the keyboard and screen of a laptop computer. The driver then has to operate the laptop computer, not from the front dashboard of the car, but from the passenger seat of the car. This makes many after market devices both difficult and dangerous to operate while driving.

The present invention addresses this and other problems associated with the prior art.

The present invention addresses this and other problems associated with the prior art.

SUMMARY OF THE INVENTION

A multiprocessor system used in a car, home, or office environment includes multiple processors that run different real-time applications. A dynamic configuration system runs on the multiple processors and includes a device manager, configuration manager, and data manager. The device manager automatically detects and adds new devices to the multiprocessor system, and the configuration manager automatically reconfigures which processors run the real-time applications. The data manager identifies the type of data generated by the new devices and identifies which devices in the multiprocessor system are able to process the data.

A communication system for a mobile vehicle, home, or office environment includes multiple processors. The multiple processors each run an Open Communication system that controls how data is transferred between processors based on data content as opposed to the links that connect the processors together. The open communication system enables data or messages to be effectively transferred and processed for real-time applications or other server based applications that may be running on the multiple processors in a secure environment regardless of processors, locations, or data links.

BRIEF DESCRIPTION OF THE DRAWINGS

FIG. **1** is a diagram of a car that has multiple processors that each run a Dynamic Configuration (DC) system.

FIG. **2** is a detailed diagram of the dynamic configuration system shown in FIG. **1**.

FIGS. **3** and **4** are diagrams showing an example of how the DC system operates.

FIGS. **5** and **6** are diagrams showing how a device manager in the DC system operates.

FIGS. **7-10** are diagrams showing how a reconfiguration manager in the DC system operates.

FIGS. **11** and **12** are diagrams showing how a data manager in the DC system operates.

FIG. **13** is a diagram showing different multiprocessor systems that can use the DC DC system.

FIG. **14** is a diagram of a car that have multiple processors that each run an open communication system.

FIG. **15** is a block diagram of the open communication system shown in FIG. **14**.

FIG. **16** is a flow diagram showing how a priority manager processes outgoing data in the open communication system.

FIG. **17** is a flow diagram showing how the priority manager receives data in the open communication system.

FIG. **18** is a flow diagram showing how a logging manager processes data in the open communication system.

FIG. **19** is a flow diagram showing how a security manager processes data in the open communication system.

FIG. **20** is a diagram showing one example of how the open communication system is used by different processors.

FIG. **21** is a diagram of a tracking report that is generated by the open communication system.

FIG. **22** is a flow diagram showing how different image data is processed and transmitted using the open communication system.

FIG. **23** is a flow diagram showing how the transmitted image data in FIG. **22** is received and processed using the open communication system.

FIG. **24** is a block diagram showing another example of how the open connection system operates.

DETAILED DESCRIPTION

FIG. **1** shows a car **6012** that includes a car multiprocessor system **6008** having multiple processors **6014**, **6016**, **6018** and **6020**. An engine monitor processor **6014** monitors data from different sensors **6022** and **6024** in the car engine. The sensors **6022** and **6024** can be any sensing device such as sensors that monitor water temperature, oil temperature, fuel consumption, car speed, etc. A brake control processor **6020** monitors and controls an Automatic Braking System (ABS) **6028**. A display processor **6016** is used to control and monitor a graphical user interface **6026**. A security processor **6018** monitors and controls latches and sensors **6030** and **6032** that are used in a car security system.

The processors **6014**, **6016**, **6018** and **6020** all include software that run a Dynamic Configuration (DC) system **6010** that enables new processors or devices to be automatically added and removed from the car multiprocessor system **6008**. The DC system **6010** also automatically reconfigures the applications running on different processors according to application failures and other system processing requirements.

For example, the processor **6020** may currently be running a high priority brake control application. If the processor **6020** fails, the DC system **6010** can automatically download the braking application to another processor in car **6012**. The DC system **6010** automatically identifies another processor with capacity to run the braking control application currently running in processor **6020**. The DC system **6010** then automatically downloads a copy of the braking control application to the identified processor. If there is no extra reserve processing resources available, the DC system **6010** may replace a non-critical application running on another processor. For example, the DC system **6010** may cause the display processor **6016** to terminate a current non-critical application and then download the brake control application along with any stored critical data.

The DC system **6010** also automatically incorporates new processors or applications into the multiprocessor system **6008**. For example, a laptop computer **6038** can communicate with the engine monitor processor **6034** through a hardwired link **6034** or communicate to the display processor **6016** through a wireless link **6036**. The DC system **6010** automatically integrates the laptop computer **6038**, or any other processor or device, into the multiprocessor system **6008**. After integrated into the multiprocessor system **6008**, not only can the laptop computer **6038** transfer data with other processors, but the laptop computer may also run car applications normally run by other processors in car **6012**.

The DC system **6010** allows the car driver to manage how different applications are processed in the car **6012**. As described above, a car operator may have to run an aftermarket navigation system through a GPS transceiver attached to the laptop computer **6038**. The car driver has to place the laptop computer **6038** in the passenger's seat and then operate the laptop computer **6038** while driving.

The DC system **6010** in the display computer **6016** can automatically detect the navigation application running on the laptop computer **6038**. The display computer **6016** notifies the car operator through the user interface **6026** that the navigation application has been detected. The car operator can then control the navigation application through the user interface **6026**. Since the user interface **6026** is located in the dashboard of car **6012**, the car operator no longer has to take his eyes off the road while operating the navigation application.

The description below gives only a few examples of the different processors, devices and applications that can be implemented using the DC system **6010**. Any single or multiprocessor system located either inside or outside of car **6012** can communicate and exchange data using the OC system **6010**. It should also be understood that the DC system **6010** can be used in any real-time environment such as between processors in different home or office appliances and different home and office computers.

FIG. **2** is a block diagram showing in more detail the Dynamic Control (DC) system **6010** located in a processor **6040** that makes up part of the multiprocessor system **6008** in car **6012** (FIG. **1**). The DC system **6010** includes a device manager **6046** that establishes communications with new devices that are to be incorporated into the multiprocessor system **6008**. A configuration manager **6044** in the processor **6040** dynamically moves applications between different processors according to user inputs and other monitored conditions in the multiprocessor system **6008**. A data manager **6042** identifies a type of data input or output by a new processor and identifies other processors or devices in the multiprocessor system that can output data from the new device or input data to the new device.

In one example, sensors **6052** feed sensor data to processor **6040**. The sensor data may include engine-monitoring data such as speed, oil temperature, water temperature, temperature inside the car cab, door open/shut conditions, etc. The sensors **6052** are coupled to processor **6040** through a link **6054**, such as a proprietary bus. A Compact Disc (CD) player **6050** is coupled to the processor **6040** through another link **6048**, such as a Universal Serial Bus (USB). Graphical User Interface (GUI) **6056** displays the data associated with sensors **6052** and CD player **6050**. The GUI **6056** displays the outputs from sensors **6052** using an icon **6060** to identify temperature data and an icon **6062** to identify car speed. The processor displays the CD player **6050** as icon **6062**.

FIGS. **3** and **4** show an example of how two new applications are dynamically added to the multiprocessor system **6008** in car **6012** (FIG. **1**). In FIG. **2**, the DC system **6010** in processor **6040** previously detected a CD player **6050** and some sensors **6056**. The CD player **6050** was displayed on GUI **6056** as icon **6058** and the temperature and speed data from sensors **6056** were displayed on GUI **6056** as icons **6060** and **6062**, respectfully.

The processor **6040** is located in car **6012** (FIG. **1**). A passenger may bring a Digital Video Disc (DVD) player **6086** into the car **6012**. The DVD **6086** sends out a wireless or wired signal **60088** to the processor **6040**. For example, the DVD **6086** may send out signals using a IEEE 802.11 wireless protocol. The processor **6040** includes an IEEE 802.11 interface that reads the signals **60088** from DVD player **6086**. If the 802.11 protocol is identified as one of the protocols used by processor **6040**, the DC system **6010** incorporates the DVD player **6086** into a processor array **6057** that lists different recognized applications.

The DC system **6010** then automatically displays the newly detected DVD player **6086** on GUI **6056** as icon **6096**. If capable, the car operator by selecting the icon **6096** can then display a video stream output from the DVD player **6086** over

GUI **6056**. The DVD player **6086** can now be controlled from the GUI **6056** on the car dashboard. This prevents the car driver from having to divert his eyes from the road while trying to operate the portable DVD player **6086** from another location in the car, such as from the passenger seat.

Other processors or devices can also be incorporated into the multiprocessor system **6008** in car **6012**. In another example, the car **6012** drives up to a drive-in restaurant **6090**. The drive-in **6090** includes a transmitter **6092** that sends out a wireless Blue tooth signal **6094**. The processor **6040** includes a Blue tooth transceiver that allows communication with transmitter **6092**. The DC system **6010** recognizes the signals **6094** from transmitter **6092** and then incorporates the drive-in **6090** into the multiprocessor system **6008** (FIG. **1**). The DC system **6010** then displays the drive-in **6090** as icon **6098** in GUI **6056**.

Referring to FIG. **4**, when the car operator selects the icon **6098**, a menu **60102** for the driver-in **6090** is displayed on the GUI **6056**. The car operator can then select any of the items displayed on the electronic menu **60102**. The selections made by the car operator are sent back to the transceiver **6092** (FIG. **3**). The amount of the order is calculated and sent back to the processor **6040** and displayed on menu **60102**. Other messages, such as a direction for the car operator to move to the next window and pickup the order can also be displayed on the GUI **6056**. At the same time, the drive-in transceiver **6092** (FIG. **3**) may send audio signals that are received by the processor **6040** and played out over speakers in car **6012**.

FIG. **5** shows in more detail the operation of the device manager **6046** previously shown in FIG. **2**. Multiple processors A, B, C and D all include device managers **6046**. The device managers **6046** can each identify other devices in the multiprocessor system that it communicates with. For example, processors A, B, C and D communicate to each other over one or more communication links including a Ethernet link **6064**, a wireless 802.11 link **6068**, or a blue tooth link **6070**.

Processor A includes a memory **6065** that stores the other recognized processors B, C and D. The data managers **6046** also identify any applications that may be running on the identified processors. For example, memory **6065** for processor A identifies an application #**2** running on processor B, no applications running on processor C, and an application #**4** running on processor D.

FIGS. **5** and **6** show how a new device is added to the multiprocessor system **6008**. Each of the existing processors A, B, C, and D after power-up are configured to identify a set or subset of the processors in the multiprocessor system **6008**. A new device **6072** is brought into the multiprocessor system **6008** either via a hardwired link or a wireless link. For example, the device E may send out signals over any one or more of a 802.11 wireless link **6067**, Blue tooth wireless link **71** or send out signals over a hardwired Ethernet link **6069**. Depending on what communication protocol is used to send signals, one or more of the processors A, B, C or D using a similar communication protocol detect the processor E in block **6074** (FIG. **6**). All of the processors may be connected to the same fiber optic or packet switched network that is then used to communicate the information from processor E to the other processors.

One of the device managers **6046** in the multiprocessor system **6008** checks the signals from processor E checks to determine if the signals are encrypted in a recognizable protocol in block **6076**. The device manager in the processor receiving the signals from processor E then checks for any data codes from the new device signals in block **6076**. The data codes identify data types used in one or more applications by processor E. A device ID for processor E is then determined from the output signals in block **6080**.

If all these data parameters are verified, the device managers **6046** in one or more of the processors A, B, C and D add the new processor E to their processor arrays in block **6082**. For example, processor A adds processor E to the processor array in memory **6065**. After being incorporated into the multiprocessor system **6008**, the processor E or the applications running on the processor E may be displayed on a graphical user interface in block **6084**.

FIG. **7** describes in further detail the operation of the reconfiguration manager **6044** previously described in FIG. **2**. In the car multiprocessor system **8** there are four processors A, B, C and D. Of course there may be more than four processors running at the same time in the car but only four are shown in FIG. **7** for illustrative purposes. The processor A currently is operating a navigation application **60110** that uses a Global Positioning System (GPS) to identify car location. Processor B currently runs an audio application **60112** that controls a car radio and CD player. The processor C runs a car Automatic Braking System (ABS) application **60114** and the processor D runs a display application **60116** that outputs information to the car operator through a GUI **60118**.

The processor D displays an icon **60120** on GUI **60118** that represents the navigation system **60110** running in processor A. An icon **60124** represents the audio application running in processor B and an icon **60122** represents the ABS application **60114** running in processor C.

The memory **60128** stores copies of the navigation application **60110**, audio application **60112**, ABS application **60114** and display application **60116**. The memory **60128** can also store data associated with the different applications. For example, navigation data **60130** and audio data **60132** are also stored in memory **60128**. The navigation data **60130** may consist of the last several minutes of tracking data obtained by the navigation application **60110**. The audio data **60132** may include the latest audio tracks played by the audio application **60112**.

The memory **60128** can be any CD, hard disk, Read Only Memory (ROM), Dynamic Random Access (RAM) memory, etc. or any combination of different memory devices. The memory **60128** can include a central memory that all or some of the processors can access and may also include different local memories that are accessed locally by specific processors.

FIG. **8** shows one example of how the configuration manager **6044** reconfigures the multiprocessor system when a failure occurs in a critical application, such as a failure of the ABS application **60114**. The configuration manager **6044** for one of the processors in the multiprocessor system **6008** detects a critical application failure in block **60134**.

One or more of the configuration managers **6044** include a watchdog function that both monitors its own applications and the applications running on other processors. If an internal application fails, the configuration manager may store critical data for the failed application. The data for each application if stored in the memory **60128** can selectively be encrypted so that only the car operator has the authority to download certain types of data. The configuration manager detecting the failure initiates a reboot operation for that particular application. The application is downloaded again from memory **60128** and, if applicable, any stored application data. If the application continues to lockup, the configuration manager may then initiate a reconfiguration sequence that moves the application to another processor.

Failures are identified by the watchdog functions in one example by periodically sending out heartbeat signals to the

other processors. If the heartbeat from one of the processors is not detected for one of the processors, the configuration manager **6044** for the processor that monitors that heartbeat attempts to communicate with the processor or application. If the application or processor with no heartbeat does not respond, the reconfiguration process is initiated.

In another example, certain processors may monitor different applications. For example, a sensor processor may constantly monitor the car speed when the car operator presses the brake pedal. If the car speed does not slow down when the brake is applied, the sensor processor may check for a failure in either the braking application or the speed sensing application. If a failure is detected, the configuration manager initiates the reconfiguration routine.

When reconfiguration is required, one of the reconfiguration managers **6044** first tries to identify a processor that has extra processing capacity to run the failed application in block **60136**. For example, there may be a backup processor in the multiprocessor system where the ABS application **60114** can be downloaded. If extra processing resources are available, the ABS application **60114** is downloaded from the memory **60128** (FIG. **7**) to the backup processor in block **60142**.

There may also be data associated with the failed application that is stored in memory **60128**. For example, the brake commands for the ABS application **60114** may have been previously identified for logging in memory **60128** using a logging label described in co-pending application entitled: OPEN COMMUNICATION SYSTEM FOR REAL-TIME MULTIPROCESSOR APPLICATIONS, Ser. No. 09/841,753 filed Apr. 24, 2001 which is herein incorporated by reference. The logged brake commands are downloaded to the backup processor in block **60142**.

If no backup processing resources can be identified in block **60136**, the configuration manager **6044** identifies one of the processors in the multiprocessor system that is running a non-critical application. For example, the configuration manager **6044** may identify the navigation application **60110** in processor A as a non-critical application. The configuration manager **6044** in block **60140** automatically replaces the non-critical navigation application **60110** in processor A with the critical ABS application **60114** in memory **60128**. The processor A then starts running the ABS application **60114**.

FIGS. **9** and **10** show an example of how the configuration manager **6044** allows the user to control reconfiguration for non-critical applications. The applications currently running in the multiprocessor system **6008** are displayed in the GUI **60118** in block **60150**. A failure is detected for the navigation application **60110** running in processor A in block **60152**. The configuration manager **6044** in processor A, or in one of the other processors B, C, or D detects the navigation failure. Alternatively, a fusion processor **60111** is coupled to some or all of the processors A, B, C and D and detects the navigation failure.

In block **60154** the configuration manager **6044** for one of the processors determines if there is extra capacity in one of the other processors for running the failed navigation application **60110**. If there is another processor with extra processing capacity, the navigation application is downloaded from memory **60128** to that processor with extra capacity along with any necessary navigation data in block **60156**. This reconfiguration may be done automatically without any interaction with the car operator.

If there is no extra processing capacity for running the navigation application **60110**, the configuration manager **6044** displays the failed processor or application to the user in block **60158**. For example, the GUI **60118** in FIG. **9** starts blinking the navigation icon **60120** in possibly a different color than the audio application icon **60124**. A textual failure message **60125** can also be displayed on GUI **60118**.

The configuration manager in block **60160** waits for the car operator to request reconfiguration of the failed navigation application to another processor. If there is no user request, the configuration managers return to monitoring for other failures. If the user requests reconfiguration, the configuration manager **6044** in block **60164** displays other non-critical applications to the user. For example, the GUI **60118** only displays the audio application icon **60124** in processor B and not the ABS application icon **60122** (FIG. **7**). This is because the audio application is a non-critical application and the ABS application **60114** is a critical application that cannot be cancelled.

If the car operator selects the audio icon **60124** in block **60166**, the configuration manager in block **60168** cancels the audio application **60112** in processor B and downloads the navigation application **60110** from memory **60128** into processor B. A logging manager in processor A may have labeled certain navigation data for logging. That navigation data **60130** may include the last few minutes of position data for the car while the navigation application **60110** was running in processor A. The logged navigation data **60130** is downloaded from memory **60128** along with the navigation application **60110** into processor B. The navigation icon **60120** in GUI **60118** then shows the navigation application **60110** running on processor B. At the same time the audio application icon **60124** is removed from GUI **60118**.

Referring back to FIG. **2**, a processor or application is accepted into the multiprocessor system by one or more of the device managers **6046**. The configuration managers **6044** in the processors reconfigure the multiprocessor system to incorporate the processor or application. The data manager **6042** then detects what type of data is transmitted or received by the new device and determines the different processors and input/output devices in the multiprocessor system that can receive or transmit data to the new application or processor.

FIG. **11** shows in further detail how the data manager **6042** in FIG. **2** operates. In block **60170**, the data manager for one of the processors determines the data standard for the data that is either transmitted or received by a new device. For example, the new device may be a MP3 player that outputs streaming audio data. In another example, the new device may be a DVD player that outputs streaming video data in a MPEG format.

One or more of the data managers **6042**, identifies the device by its data and the data, if applicable, is displayed on the graphical user interface in block **60172**. The data manager then identifies any devices in the multiprocessor system that can output or transmit data to the new device in block **60174**. For example, a newly detected audio source may be output from a car speaker. The data manager monitors for any user selections in block **60176**. For example, the car operator may select the output from a portable CD player to be output from the car speakers. The data manager controlling the CD player and the data manager controlling the car speakers then direct the output from the CD player to the car speakers in block **60178**.

FIG. **12** gives one example of how the data managers **6042** in the multiprocessing system operate. A GUI **60180** displays the audio or video (A/V) sources in a car. For example, there are three devices detected in or around the car that are A/V sources. A cellular telephone detected in the car is represented by icon **60184**, a radio is represented by icon **60186**, and a DVD player is represented by icon **60188**.

The A/V output devices in the car are shown in the lower portion of GUI **60180**. For example, icons **60192**, **60194**,

60196, **60200**, and **60204** show car audio speakers. An in-dash video display is represented by icon **60190** and a portable monitor is represented by icon **60198**.

Currently, a car operator may be listening to the radio **60186** over speakers **60192**, **60194**, **60196**, **60200** and **60204**. However, a passenger may move into the backseat of the car carrying an MP3 player. The MP3 player runs the DC system **6010** described in FIG. **2** and sends out a signal to any other processors in the multiprocessor system **6008** in the car. The device manager **6046** and configuration manager **6044** in one of the processors verify the data format for the MP3 player and configure the MP3 player into the multiprocessor system.

One of the data managers **6042** determines the MP3 player outputs a MP3 audio stream and accordingly generates the icon **60182** on the GUI **60180**. The data manager **6042** also identifies a speaker in the MP3 player as a new output source and displays the speaker as icon **60202**. The car operator sees the MP3 icon **60182** now displayed on GUI **60180**. The car operator can move the MP3 icon **60182** over any combination of the speaker icons **60192**, **60194**, **60196**, **60200** and **60204**. The output from the MP3 player is then connected to the selected audio outputs.

Audio data can also be moved in the opposite direction. The speaker icon **60202** represents the output of the portable MP3 player that the passenger brought into the backseat of the car. The car operator also has the option of moving one or more of the other audio sources, such as the cellular telephone **60184** or the radio **60186** icons over the speaker icon **60202**. If the car operator, for example, moves the radio icon **60186** over the MP3 player speaker icon **60202** and the MP3 player can output the radio signals, the multiprocessor system redirects the radio broadcast out over the MP3 speaker.

It should be understood that the multiprocessor system described above could be used in applications other than cars. For example, FIG. **13** shows a first GUI **60210** that shows different processors and applications that are coupled together using the DC system **6010** in an automobile. A GUI **60212** shows another multiprocessor system comprising multiple processors in the home. For example, a washing machine is shown by icon **60214**. The DC system allows the washing machine processor to communicate and be configured with a television processor **60216**, toaster processor **60218**, stereo processor **60220**, and an oven processor **60222**.

FIG. **14** shows a car **3312** that includes multiple processors **3314**, **3316**, **3318** and **3320**. The engine monitor processor **3314** in one configuration monitors data from different sensors **3322** and **3324** in the car engine. The sensors **3322** and **3324** can be any sensing device such as sensors that monitor water temperature, oil temperature, fuel consumption, car speed, etc. The brake control processor **3320** monitors and controls an Automatic Braking System (ABS) **3328**. The display processor **3316** is used to control and monitor a graphical or mechanical user interface. The security processor **3318** monitors and controls latches and sensors **3330** and **3332** that are used in a car security system.

Typical networks, such as in an office network environment, enable multiple computers to communicate with each other. Applications such as printing jobs can be launched from any one of the networked computers. If one of the networked computers crashes or is busy, a user must manually send the job to another computer. The other computer then handles the task like any other locally received task.

In a car environment, tasks must be processed with different priorities in real-time. For example, the braking tasks in the brake processor **3320** have to be processed with a high priority while a radio selection task performed in the display processor **16** can be processed with a relatively low priority. The processors **3314**, **3316**, **3318** and **3320** all include software that runs an Open Communication (OC) system **3310** that enables the multiple processors to transfer data and exchange messages for performing these real-time car applications.

If the processor **3320** currently running the high priority braking application fails, the OC system **3310** allows the braking tasks to be offloaded to another processor in car **3312**, such as the display processor **3316**. The OC system **3310** automatically assigns a high priority to the braking tasks that allow the braking tasks to override lower priority tasks, such as the radio application, that are currently being performed in display processor **3316**.

The OC system **3310** also ensures that data in each processor is processed in a secure manner for the car environment. The security portion of the OC system **3310** prevents unauthorized devices from accessing the different car applications. The OC system **3310** also includes a logging portion that allows data in the car system to be automatically logged. This is important for accident reconstruction purposes. The OC system **3310** also allows different processors to communicate over different communication protocols and hardware interfaces. Any processor that includes an OC system **3310** can be integrated in the system shown in FIG. **14**. This allows different processors and different applications can be seamlessly replaced and added to the overall multiprocessor system.

The description below gives only a few examples of the different processors and different applications that can implemented using the OC system **3310**. However, any single or multiprocessor system located either inside or outside of car **3312** can communicate and exchange data using the OC system **3310**. It should also be understood that the OC system **3310** can be used in any real-time network environment such as between processors used in appliances and computers in the home.

FIG. **15** is a block diagram of the communication managers used in the OC system **3310** described in FIG. **14**. The different communication managers in the OC system **3310** are configured to provide the necessary control for operating a distributed processor system in a real-time car environment. Applications **3348** are any of the different applications that can be performed for the car **3312** shown in FIG. **14**. For example, applications can include car displays, braking control, security systems, sensor monitoring, airbag deployment, etc. One or more applications can be run in the same processor at the same or at different times.

A car interface manager **46** operates as an Application Programmers Interface (API) that can be implemented in any variety of different languages such as Java, C++, Extensible Markup Language (XML) or HyperText Markup Language (HTML), etc. The car interface manager **3346** enables applications **3348** to be written in any variety of different languages. This prevents the applications **3348** from having to be written specifically for the car environment or for a specific communication protocol. Thus, applications written for other systems can be reused in the car system described below. The car interface manager **3346** reads basic processing and data transfer commands needed to transfer data and messages between different processors and storage mediums inside or outside the car **3312**.

For clarity the terms 'message' and 'data' are used interchangeably below. After a message passes through the car interface manager **3346**, a priority manager **3344** determines a priority value for the message that determines how the message is processed both in the local processor **3350** and in other processors such as processor **3352**. Referring to FIG.

16, an outgoing message is identified by the priority manager **3344** in block **3360**. A priority for the message is identified in block **3362** by reading a priority value that the generic car interface manager **3346** has attached to the message.

In block **3364**, the priority manager **3344** compares the priority value for the outgoing message with the priority values for other messages in the processor. The priority manager **3344** ranks the outgoing message with respect to the other messages and then sends the message to the logging manager **3342** in block **3366** (FIG. **15**). For example, there may be several messages that either need to be output or received by a particular processor. An output message with a high priority value, such as a crash indication message, will be assigned higher priority than other messages and will therefore be immediately transmitted by the processor **3350** before other lower priority messages.

FIG. **17** shows how the priority manager **3344** receives messages from other processors. There may be multiple applications running on the same processor and multiple messages and data sent from other processors to those applications. For example, multiple sensors may be sending different types of data to a video display application running on one of the processor **3350** (FIG. **15**). That same processor **3350** may also be receiving different types of sensor data for running an airbag deployment application. The priority manager **3344** determines the order that messages are processed by the different applications that reside on processor **3350**.

In block **3368**, the priority manager **3344** reads the priority labels for incoming messages. If the priority of the message is not high enough to run on the processor in block **3370**, the data or message is rejected in block **3376**. The priority manager **3344** may send out a message to the sending processor indicating the message has been rejected. In some situations, the message or data may have such a low priority that an acknowledge message does not have to be sent back to the sending processor. For example, inside temperature data from a temperature sensor may be sent to one or more processors with no requirement that the processor accept or acknowledge the data. In this case the temperature data is sent with a very low priority value that indicates to the priority manager **3344** that no message needs to be sent back to the temperature sensor even if the data is rejected.

The priority manager **3344** in block **3372** ranks the priority of the incoming message in relation to the priorities of all the other messages in the processor. The priority manager in block **3374** decides according to the ranking whether the message should be put in a queue or sent directly to the application for immediate processing. For example, a crash indication message may have a high enough priority to cause the priority manager **3344** to delay all data currently being processed by all other applications in the same processor. The priority manager **3344** directs all the applications to wait while the current high priority crash indication message is processed. The other data and messages are queued in the processor and processed after the crash indication message has been completed.

Referring to FIGS. **15** and **18**, a logging manager **3342** controls what data is logged by different processors. It may be important to log critical failures that occur during an accident. For example, it may be important to verify that a particular processor sent an air bag deployment message and that another processor successfully received the airbag deployment message. This would allow insurance companies and other entities to reconstruct accidents by identifying when and where different messages were sent and received.

The logging manager **3342** receives either an incoming message over a communications link for sending to a local application **3348** or receives an outgoing message from one of the local applications **3348** for sending out over the communications link to another processor in block **3380**. The logging manager **3342** reads a logging label in the message in block **3382**. If the logging label indicates that no logging is required, the message is sent on to the next communication manager in block **3388**. If it is an outgoing message it is sent to the security manager **3340** (FIG. **15**). If it is a incoming message it is sent to the priority manager **3344**. If the message requires logging, the logging manager **3342** stores the message in a memory in block **3386**. The logging label may indicate a particular type of memory for logging, such as a nonvolatile Flash memory or, if available, a high volume hard disk peripheral memory.

The logging manager **3342** in each processor, provides the OC system **3310** with the unique ability to track when and where messages are sent and received at different processors in the multiprocessor car system. This is important in accident reconstruction allowing the logging managers **3342** to identify which processors and applications failed and also the sequence in which the different processors and associated applications failed.

The logging manager **3342** can also track unauthorized messages and data that may have caused any of the processors in the car to crash. For example, an audio processor that handles audio applications in the car may crash due to unauthorized downloading of MP3 music from a laptop computer. The logging manager **3342** can log the unauthorized data received from the laptop MP3 player. The logging manager **3342** logs any data that does not have a particular security or priority label value. A system administrator can then down load the MP3 data to identify what caused the audio processor to crash.

Referring to FIGS. **15** and **19**, a security manager **3340** provides security for applications both receiving and transmitting messages. For instance, a laptop computer may be connected to a Ethernet port in the car **3312** (FIG. **14**). If the laptop computer does not use the OC system **3310**, data from that laptop application is not allowed to access certain processors or certain applications in the car **3312**. For example, audio data should not be sent or processed by a processor that performs car braking control.

The security manager **3340** in block **3390** reads a message either received from an application on the same processor or received over a communication link from another processor. The security manager **3340** determines if there is a security value associated with the message in block **3392**. If there is no security value associated with the data, the security manager **3340** may drop the data in block **33100**. However, some applications, such as a processor that plays audio data may not require a security label. In this case, the security manager in block **3394** allows the data to be passed on to the application in block **3398**.

In other instances the data or message may have a security value, but that security value is not sufficient to allow processing on the present applications. For example, data for car security monitoring may be sent to a processor that controls air bag deployment and an automatic braking system. The two currently running applications may set a minimum security level for receiving data. If data received from other processors do not have that minimum security level in block **3396**, the data is dropped in block **33100**. Otherwise, the data or message is passed on to the next communication layer for further processing in block **3398**. Thus the security manager **3340** prevents unauthorized data or messages from effecting critical car applications.

Referring back to FIG. **15**, an operating system layer **3338** identifies the communication platform used for communicating the data or message over a link identified in a hardware/link interface **3336**. The operating system **3338** then formats the message for the particular communication stack and medium used by the identified link **3354**. For example, the operating system layer **3338** may identify a first message being transmitted over a Bluetooth wireless link and a second message transmitted over a Transmission Control Protocol/Internet Protocol (TCP/IP) packet switched link. The data or message adds whatever headers and formatting is necessary for transmitting the first message over the Bluetooth wireless link and the second message over the TCP/IP hardwired link.

The hardware/link interface **3336** includes the software and hardware necessary for interfacing with different communication links **3354**. For example, the two processors **3350** and **3352** may communicate over a Ethernet link, 802.11 wireless link, or hardwired Universal Serial Bus link, etc. The software necessary for the two processors to communicate over these different interfaces is known to those skilled in the art and is therefore not described in further detail.

FIG. **20** describes one example of an application that uses the OC system **3310** described above in FIGS. **14-19**. A car **33102** includes an radar sensor **33104** that is controlled by a radar processor **33106**. The radar sensor **33104** is located in the front grill of car **33102**. An InfraRed (IR) sensor **33110** is controlled by an IR processor **33112** and is located on the front dash of car **33102**. A braking system **33123** is controlled by a brake control processor **33122**. The IR processor **33112** is connected to a fusion processor **33114** by an Ethernet link **33116** and the radar processor **33106** is connected to the fusion processor **33114** by a 802.11 wireless link **33108**. The brake processor **33122** is connected to the fusion processor **33114** by a CAN serial link **33120**. The fusion processor **33114** is also coupled to a display screen **33118**.

The radar sensor **33104** in combination with the radar processor **33106** generates Radar Track Reports (RTRs) **33130** that are sent to the fusion processor **33114**. The IR sensor **33110** in combination with the IR processor **33112** generate Infrared Track Reports (ITRs) **33128** that are sent to the fusion processor **33114**.

Referring to FIG. **21**, each track report **33128** and **33130** includes communication link headers **33132** for communicating over an associated interface medium. In this example, the radar track report **33130** includes the link headers **33132** necessary for transmitting data over the 802.11 link **33108**. The infrared track report **33128** includes the link headers **33132** for transmitting data over the Ethernet link **33116**.

The track reports **33128** and **33130** include Open Communication (OC) labels **33133** for performing the OC operations described above. A security label **33134** is used by the security manager for preventing unauthorized data from being downloaded into one of the car processors and disrupting applications. A logging label **33136** is used by the logging manager to identify data that needs to be logged in a local memory. The priority label **33138** is used by the priority manager for scheduling messages or data to the applications run by the processors. The link headers **33132**, security label **33134**, logging label **33136** and priority label **33138** are all part of the data **33131** used by the open operating system **33131**.

The radar processor **33106** and IR processor **33112** also send a time of measurement **33140** and other data **33142** from the radar sensor **33104** and IR sensor **33110**, respectively. The data **33142** can include kinematic states of objects detected by the sensors. The time of measurement data **33140** and other sensor data **33142** is referred to as application data **33139** and is the actual data that is used by the application.

FIGS. **22** and **23** show one example of how the radar and infrared sensor data is processed by the OC system **3310**. One or both of the radar processor **33106** and the IR processor **33112** may generate image data **33150** and **33152** for the area in front of the car **33102** (FIG. **20**). For simplicity, the discussion below only refers to an image generated by radar sensor **33104**. At a first time t=t.sub.1, sensor **33104** detects a small far away object **33154**. At another time t=t.sub.2, sensor **33104** detects a large up-close object **33156**.

The applications described below are all performed by the OC system **3310** thus preventing the applications from having to handle the tasks. This allows the applications to be written in a completely portable fashion with no knowledge of the network hardware, security, priority and logging operations. This greatly reduces the cost of creating applications.

An image processing application in the processor **33106** identifies the object **33154** as a small far away object in block **33158**. The image and kinematic data for the object is output by the OC system **3310** as a radar track report **33130**. The security manager **3340** (FIG. **15**) in the radar processor **33106** adds a security label **33134** to the report in block **33160** and the logging manager **3342** may or may not add a logging label to the report in block **33162**. In this example, the object **33154** has been identified by the image processing application as a small far away object. Therefore, the logging manager does not label the track report for logging. The priority manager **3344** (FIG. **15**) adds a priority label **33138** (FIG. **21**) to the report in block **33164**. Because the image processing application identifies the object **33154** as no critical threat (small far away object), the priority label **33138** is assigned a low priority value in block **33164**.

The OC system **3310** then formats the radar track report in block **33168** according to the particular link used to send the report **33130** to the fusion processor **33114**. For example, the operating system **3338** and the hardware/link interface **3336** (FIG. **15**) in the radar processor **33106** attaches link headers **33132** to the track report **33130** (FIG. **21**) for transmitting the report **33130** over the 802.11 link. The track report **33130** is then sent out over the link **33108** in block **33168** to the fusion processor **33114**.

Referring next to FIGS. **20-23**, the fusion processor **33114** includes a wireless interface **33119** that communicates with the wireless 802.11 link **33108** and an Ethernet interface **33117** that communicates with the Ethernet link **33116**. The hardware/link interface **3336** in the fusion processor OC system **3310** uses the link headers **33132** (FIG. **21**) to receive the radar track report **33130** in block **33182** and process the reports in block **33184** (FIG. **23**).

The OC system **3310** reads the security label in block **33186** to determine if the track report has authority to be processed by the fusion processor **33114**. If the track report passes the security check performed by the security manager in block **33186**, the logging manager in block **33188** checks to see if either the received radar data needs to be logged. In this example, the image processing application in the radar processor identified the object **33154** (FIG. **22**) to be within a particular size range and distance range that does not indicate a critical crash situation. Therefore, the track report **33130** was not labeled for logging. The fusion processor **33114** therefore does not log the received report in block **33188**.

Because the image **33150** was identified as non-critical, the priority label **33138** (FIG. **21**) for the track report **33130** is given a low priority value. The fusion processor **33114** ranks the track report with the other data that is being processed and then processes the report according to the ranking.

Different applications in the fusion processor **33114** may or may not be performed depending on the track report. For example, the object **33154** may be sent to a video display in block **33194**. However, the fusion processor **33114** will not send a brake command in block **33196** to the car braking system **33123**. This is because the image has been identified as non-critical. Similarly, no audio warning is sent to the car audio system in block **33198** because the object has been identified as non-critical.

Referring back to FIG. **22**, in another example, the IR processor **33112**, the radar processor **33106**, or both, in block **33170** detect at time t.sub.2 an object **33156** that is large and close to the car **33102**. For simplicity, it is assumed that only the IR processor **33112** has identified object **33156**. The IR processor **33112** generates a track report **33128** in block **33170** and the OC system in the IR processor **33112** adds a security label **33134** (FIG. **21**) to the report in block **33172**. Because the object **33156** has been identified as being within a predetermined size and within a predetermined range of car **33102** (critical data), the logging manager in the IR processor **33112** assigns a logging label value **33136** to the IRT **33128** that directs all processors to log the image data **33142**. The image data is logged by the IR processor **33112** in a local memory in block **33174**.

Because the IR track report **33128** has been identified as critical data, the priority manager **3344** in the IR processor **33112** assigns a high priority label value **33138**. This high priority value is read by the operating system **3338** and interface hardware **3336** (FIG. **15**) in blocks **33178** and **33180**. Accordingly the IR track report **33128** is given preference when being formatted in block **33178** and transmitted in block **33180** over Ethernet link **33116** to the fusion processor **33114**.

Referring again to FIG. **23**, the IR track report **33128** is received by the fusion processor **33114** in block **33182** and the link processing performed in block **33184**. This link processing is known to those skilled in the art and is therefore not described in further detail The report may be given higher link processing priority in the fusion processor **33114** based on a priority value assigned in the link headers **33132**.

The security manager **3340** in the fusion processor **33114** confirms there is an acceptable value in the security label in block **33186** and then passes the IR track report **33128** to the logging manager in block **33188**. The logging manager **3342** in the fusion processor **33114** reads the logging label and accordingly logs the image data in a local nonvolatile memory. This provides a history of the image **33156** that was detected by the IR sensor **33110**.

The logged image data may then be used in subsequent accident analysis. For example, an accident reconstruction specialist can download the logged image data or message in both the IR processor **33112** and in the fusion processor **33114** to determine when the image data **33140** and **33142** was first detected. It can then be determined whether the image data was sent by the IR processor **33112** and received by the fusion processor **33114**.

The priority manager reads the priority label **33138** in block **33190** and determines that the IR track report has a high priority. Accordingly, the track report is immediately sent to different applications in block **33192**. The priority manager **3344** may first send the track report to the brake control application in block **33196**. The brake control application immediately sends a brake command **33125** (FIG. **20**) to the brake processor **33122**.

The logging manager **3342** in the fusion processor **33114** adds a logging label **33136** to the outgoing brake command **33125**. Both the fusion processor **33114** and the brake control processor **33122** will then both log the brake command **33125**. Thus, not only is the sequence of transmissions of the image data and messages logged in both the IR processor **33112** and fusion processor **33114** but also the sequence of the brake message **33125** from the fusion processor **33114** to the brake processor **33122**. This further adds to any accident analysis data that may need to be obtained from the car if an accident occurs.

The IR data may also be sent to an audio application in block **33198** that immediately sends out an audio alarm over the car stereo system or out over a car horn. This automatically warns both the car driver and the object **33156** in front of car **33102** of a possible collision. In a third application, the fusion processor **33114** may send the IR image data to an image display **33118** in block **33194**.

FIG. **24** is a block diagram showing another example of how the OC **3310** exchanges information according to the type of data independently of the physical links that connect the different applications together. A processor A runs an application **33202**. In this example, the application **33202** is an IR processing application that receives IR data from an IR sensor **33200** and outputs the IR data as a sensor report. A processor B runs a fusion processing application **33220** that controls other car functions in part based on the IR sensor report.

The OC system **33208** includes a control table **33212** that includes several parameters associated with a SENSOR REPORT **33210**. For example, the SENSOR REPORT **33210** may need to include a priority label, a security label or a logging label. The security label also includes one or more locations where the SENSOR REPORT **33210** should be sent. The IR application **33202** includes a CONNECT TO SEND (SENSOR REPORT) command that the OC **3310** then uses to establish a slot in memory for the SENSOR REPORT. When IR data is received from the IR sensor **33200**, the IR application **33202** generates sensor data (FIG. **21**) for the SENSOR REPORT **33210** and stores that sensor data in the memory slot established by the OC system **3310**. The sensor data is contained within the application data section **33139** of the sensor report shown in FIG. **21**. The IR application **33202** then issues the SEND(SENSOR REPORT) command **33206** to notify the OC **3310** that there is a SENSOR REPORT in the reserved slot in memory.

The OC system **3310** attaches a security label **33134**, logging label **33136** and priority label **33138** to the SENSOR REPORT **33210** as described previously in FIG. **21**. The OC system **3310** then adds the necessary link headers **33132** (FIG. **21**) that are required to send the SENSOR REPORT **33210** to other identified applications. The control table **33212** includes security parameters associated with the SENSOR REPORT data type. One of the SENSOR REPORT security parameters, in addition to a security value, is an identifier **33213** for the fusion application **33220** running in processor B. The identifier **33213** identifies whatever address, format, and other protocol information is necessary for transmitting the SENSOR REPORT **33210** to the fusion application **33220**. The OC system **3310** attaches the link headers **33132** to the SENSOR REPORT **33210** and then sends the report through a hardware interface **33209** over a link **33211** to processor B.

The fusion application **33220** works in a similar manner and initiates a CONNECT TO RECEIVE (SENSOR REPORT) command to the OC system **3310** running in the same processor B. The OC system **3310** reserves a slot in local memory for any received SENSOR REPORTs **33210**. The fusion application **33220** issues a WAIT ON (SENSOR REPORT) command that continuously waits for any SEN-

SOR REPORTs **33210** sent by the IR application **33202**. The OC system **3310** control table **33214** also identifies from the SENSOR REPORT data type the communication link **33211**, hardware interface **33215** and other associated communication protocols used for receiving the SENSOR REPORT **33210**.

Whenever a SENSOR REPORT **33210** is received, the OC system **3310** in processor B performs the security, logging and priority management operations described above based on the labels **33134**, **33136** and **33138** in the sensor report **33210** (FIG. **21**). The OC system **3310** then places the sensor data from the SENSOR REPORT **33210** in the memory slot reserved in local memory. The OC system **3310** detects the data in the reserved memory slot and processes the sensor data. Another portion of the fusion application **33220** may send out a BRAKE command based on the sensor data. The control table **33214** for the OC system **3310** in processor B also includes the necessary system parameters for sending a BRAKE REPORT to another processor in the multiprocessor system, such as a brake processor.

The communication link between the fusion application **33220** and the brake application may be completely different than the link between the IR application **33202** and the fusion application **33220**. However, the fusion application **33220** outputs the SENSOR REPORT and the BRAKE REPORT in the same manner. The OC system **3310** then uses stored link information in the control table **33214** to communicate to the IR application **33202** and the brake application over different links.

Thus, the IR application **33202** and the fusion application **33220** do not need to know anything about the physical links, address, or any of the other operations that are used to transmit data over different communication links.

The system described above can use dedicated processor systems, micro controllers, programmable logic devices, or microprocessors that perform some or all of the communication operations. Some of the operations described above may be implemented in software and other operations may be implemented in hardware.

For the sake of convenience, the operations are described as various interconnected functional blocks or distinct software modules. This is not necessary, however, and there may be cases where these functional blocks or modules are equivalently aggregated into a single logic device, program or operation with unclear boundaries. In any event, the functional blocks and software modules or described features can be implemented by themselves, or in combination with other operations in either hardware or software.

Having described and illustrated the principles of the invention in a preferred embodiment thereof, it should be apparent that the invention may be modified in arrangement and detail without departing from such principles. Claim is made to all modifications and variation coming within the spirit and scope of the following claims.

The system described above can use dedicated processor systems, micro controllers, programmable logic devices, or microprocessors that perform some or all of the communication operations. Some of the operations described above may be implemented in software and other operations may be implemented in hardware.

For the sake of convenience, the operations are described as various interconnected functional blocks or distinct software modules. This is not necessary, however, and there may be cases where these functional blocks or modules are equivalently aggregated into a single logic device, program or operation with unclear boundaries. In any event, the functional blocks and software modules or described features can be implemented by themselves, or in combination with other operations in either hardware or software.

Having described and illustrated the principles of the invention in a preferred embodiment thereof, it should be apparent that the invention may be modified in arrangement and detail without departing from such principles. Claim is made to all modifications and variation coming within the spirit and scope of the following claims.

The invention claimed is:

1. An application management system used in a vehicle, comprising:

multiple processors located on-board the vehicle and adapted to run real-time vehicle applications;

a communication system configured to couple the multiple processors together over multiple communication links;

a device manager for automatically detecting and adding at least one new device to the on-board multiprocessor system, wherein the at least one new device is at least one of portable and a cell phone;

a data manager that identifies data generated by the new device and identifies at least one other device in the multiprocessor system that can display at least some of the identified data;

a dynamic configuration system run on at least one of the multiple on-board processors, comprising:

a configuration manager configured to:

operate on the at least one of the multiple processors,

store critical information about the application running on the multiple processors,

automatically detect application failure,

responsive to detecting application failure, initiate a reconfiguration process,

download from memory the stored critical data associated with the failed application,

initiate a reboot operation for the failed application; and

a priority manager for determining a priority value of a message, wherein the priority value determines how messages are processed in at least one of the multiple on-board processors and the new device, responsive to determining a priority value for the message, determine which messages are allowed to be at least one of received and transmitted by the new device, and which data and messages are allowed to be input or output by the multiprocessor system.

2. The application management system of claim **1** wherein the vehicle applications include one or more of the following:

braking;

audio control;

video control;

sensor monitoring;

display control;

security monitoring;

temperature control;

lighting control; and

airbag monitoring.

3. The application management system of claim **1** wherein the communication system includes support for at least one of IEEE 802.11 link, a Bluetooth link, a hard-wired link, a satcom link, and a cellular link.

4. The application management system of claim **1**, wherein the configuration manager is further configured to:

monitor the vehicle applications running on the multiple processors;

identify a failure of a high priority one of the vehicle applications operating on a first one of the multiple processors;

identify a lower priority one of the vehicle applications operating on a second one of the multiple processors; and

reconfigure the multiple processors to run the high priority one of the vehicle applications on the second one of the multiple processors.

5. The application management system of claim **1** wherein the configuration manager is further configured to:

store a copy of a high priority one of the vehicle applications in a memory;

identify a failure of the high priority one of the vehicle applications on a first one of the multiple processors;

identify a second one of the multiple processors currently running another one of the vehicle applications;

download the copy of the high priority one of the vehicle applications from the memory to the second one of the multiple processors in response to identifying the failure of the high priority one of the vehicle applications on the first one of the multiple processors; and

run the downloaded copy of the high priority one of the vehicle applications on the second one of the multiple processors.

6. The application management system of claim **1** wherein:

the data manager is further configured to:

identify a failure of one of the vehicle applications running on a first one of the multiple processors;

store critical data generated by the vehicle application identified as failed; and

configure a second one of the multiple processors to run the vehicle application; and

download and process the critical data with the vehicle application running on the second one of the multiple processors in response to the failure of the identified one of the vehicle applications on the first one of the multiple processors.

7. The application management system of claim **1** further comprising a user interface configured to:

indicate a failure associated with one of the vehicle applications running on one of the multiple processors;

indicate other vehicle applications running on other ones of the multiple processors that can be replaced by the failed one of the vehicle applications.

8. The application management system of claim **1** wherein the data manager is further configured to:

identify a type of data transferred by the new hardware device;

identify an application configured to process the type of data; and

display the application on a user interface.

9. A method for managing applications used in a vehicle, comprising:

adapting multiple processors located on-board the vehicle to run real-time vehicle applications;

configuring a communication system to couple the multiple processors together over multiple communication links;

configuring a device manager to automatically detect and add at least one new device to the on-board multiprocessor system, wherein the at least one new device is at least one of portable and a cell phone;

configuring a data manager to identify data generated by the new device and identify at least one other device in the multiprocessor system that can display at least some of the identified data;

running a dynamic configuration system on at least one of the multiple on-board processors, comprising:

a configuration manager configured to:

operate on the at least one of the multiple processors,

store critical information about the application running on the multiple processors,

automatically detect application failure,

responsive to detecting application failure, initiate a reconfiguration process,

download from memory the stored critical data associated with the failed application,

initiate a reboot operation for the failed application; and

a priority manager for determining a priority value of a message, wherein the priority value determines how messages are processed in at least one of the multiple on-board processors and the new device, responsive to determining a priority value for the message, determine which messages are allowed to be at least one of received and transmitted by the new device, and which data and messages are allowed to be input or output by the multiprocessor system.

10. The method of claim **9** wherein the vehicle applications include one or more of the following:

braking;

audio control;

video control;

sensor monitoring;

display control;

security monitoring;

temperature control;

lighting control; and

airbag monitoring.

11. The method of claim **9** wherein the communication system includes support for at least one of IEEE 802.11 link, a Bluetooth link, a hard-wired link, a satcom link, and a cellular link.

12. The method of claim **9**, wherein the configuration manager is further configured to:

monitor the vehicle applications running on the multiple processors;

identify a failure of a high priority one of the vehicle applications operating on a first one of the multiple processors;

identify a lower priority one of the vehicle applications operating on a second one of the multiple processors; and

reconfigure the multiple processors to run the high priority one of the vehicle applications on the second one of the multiple processors.

13. The method of claim **9** wherein the configuration manager is further configured to:

store a copy of a high priority one of the vehicle applications in a memory;

identify a failure of the high priority one of the vehicle applications on a first one of the multiple processors;

identify a second one of the multiple processors currently running another one of the vehicle applications;

download the copy of the high priority one of the vehicle applications from the memory to the second one of the multiple processors in response to identifying the failure of the high priority one of the vehicle applications on the first one of the multiple processors; and

run the downloaded copy of the high priority one of the vehicle applications on the second one of the multiple processors.

14. The method of claim **9** wherein:

the data manager is further configured to:

identify a failure of one of the vehicle applications running on a first one of the multiple processors;

store critical data generated by the vehicle application identified as failed; and

configure a second one of the multiple processors to run the vehicle application; and

download and process the critical data with the vehicle application running on the second one of the multiple processors in response to the failure of the identified one of the vehicle applications on the first one of the multiple processors.

15. The method of claim **9** further comprising a user interface configured to:

indicate a failure associated with one of the vehicle applications running on one of the multiple processors;

indicate other vehicle applications running on other ones of the multiple processors that can be replaced by the failed one of the vehicle applications.

16. The method of claim **9** wherein the data manager is further configured to:

identify a type of data transferred by the new hardware device;

identify an application configured to process the type of data; and

display the application on a user interface.

* * * * *