US 20160232713A1

(19) United States

(12) Patent Application Publication

Lee

(10) Pub. No.: US 2016/0232713 A1

(43) Pub. Date: Aug. 11, 2016

(54) **VIRTUAL REALITY AND AUGMENTED REALITY CONTROL WITH MOBILE DEVICES**

(71) Applicant: **Fangwei Lee**, San Carlos, CA (US)

(72) Inventor: **Fangwei Lee**, San Carlos, CA (US)

(21) Appl. No.: **14/745,414**

(22) Filed: **Jun. 20, 2015**

Related U.S. Application Data

(60) Provisional application No. 62/114,417, filed on Feb. 10, 2015.

Publication Classification

(51) **Int. Cl.**

G06T 19/00	(2006.01)
G06F 3/01	(2006.01)
G02B 27/01	(2006.01)

(52) **U.S. Cl.**

CPC ***G06T 19/006*** (2013.01); ***G02B 27/0172*** (2013.01); ***G06F 3/017*** (2013.01); *G02B 2027/0178* (2013.01)

(57) **ABSTRACT**

Systems and methods for converting a physical input from a user into an action in a virtual reality or augmented reality environment are disclosed. A particular embodiment includes: receiving image data from an image capturing subsystem, the image data including at least a portion of the at least one reference image, the at least one reference image representing a portion of a set of reference data; receiving position and orientation data of the image capturing subsystem, the position and orientation data representing another portion of the reference data; measuring, by use of a data processor, a change in spatial relation relative to the reference data when a physical input is applied to a tracking subsystem; and generating an action in a virtual world, the action corresponding to the measured change in spatial relation.

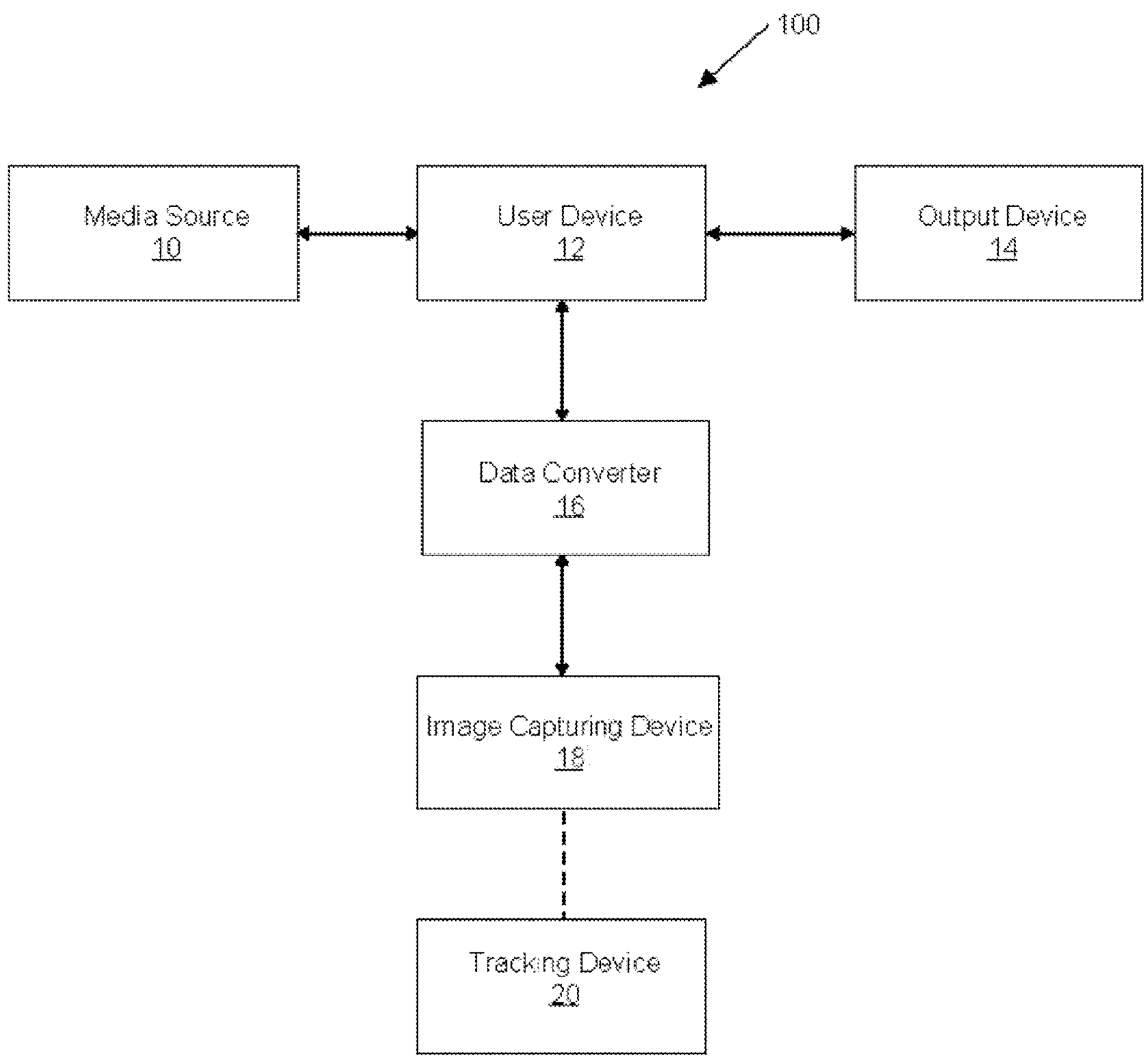

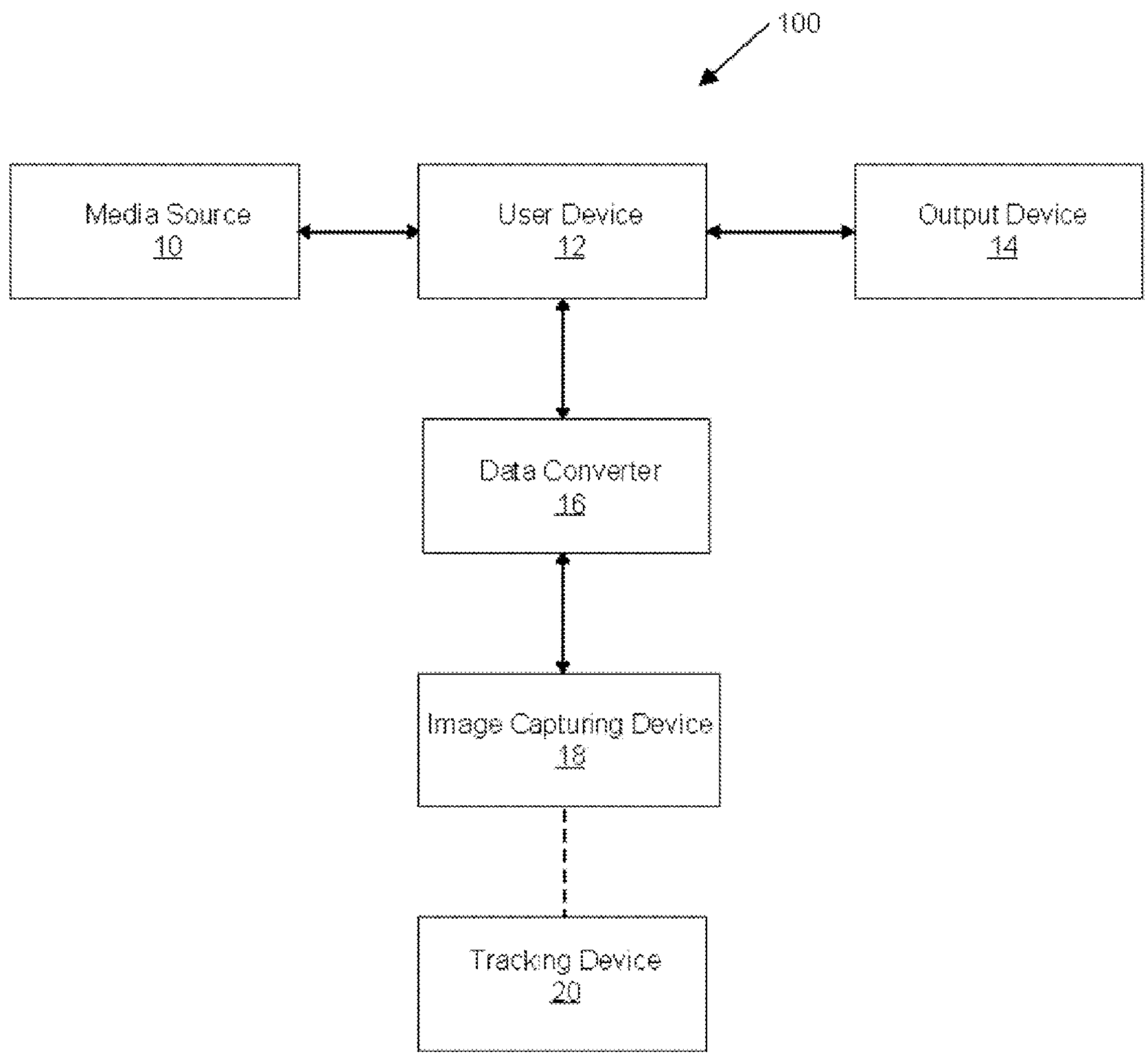
100
Media Source
10
User Device
12
Output Device
14
Data Converter
16
Image Capturing Device
18
Tracking Device
20

Fig. 1

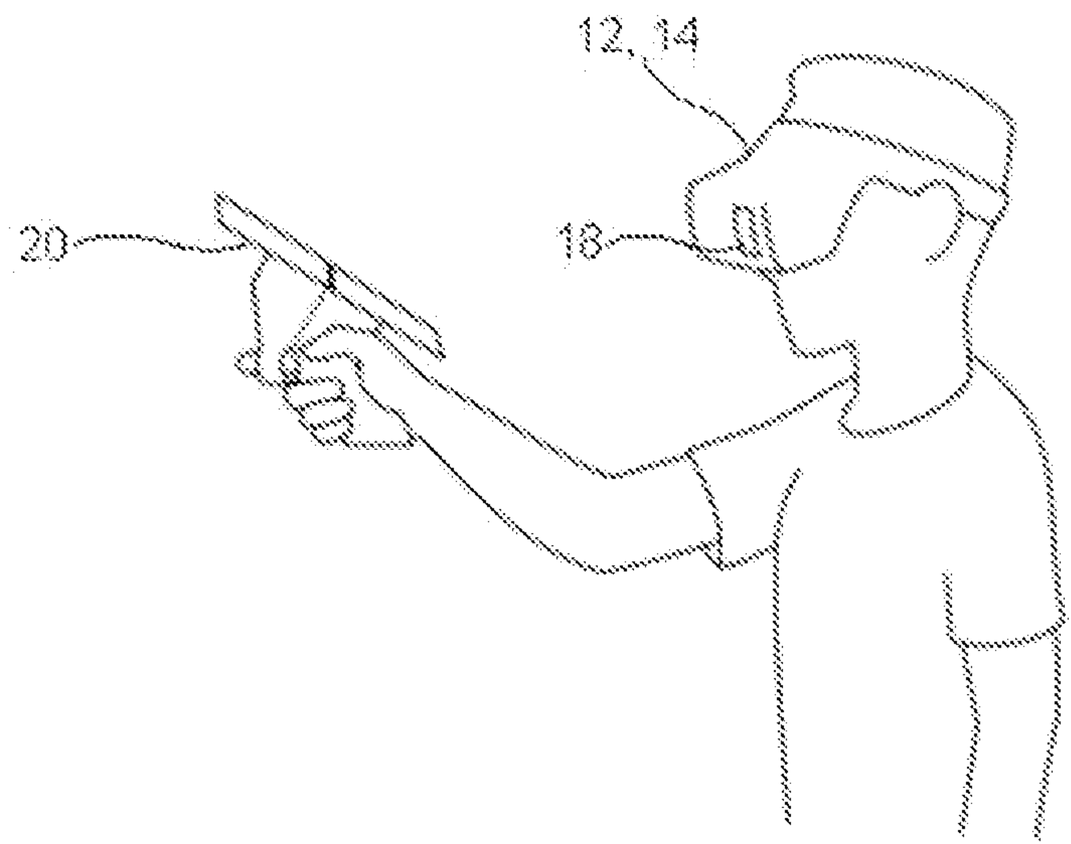

Fig. 2

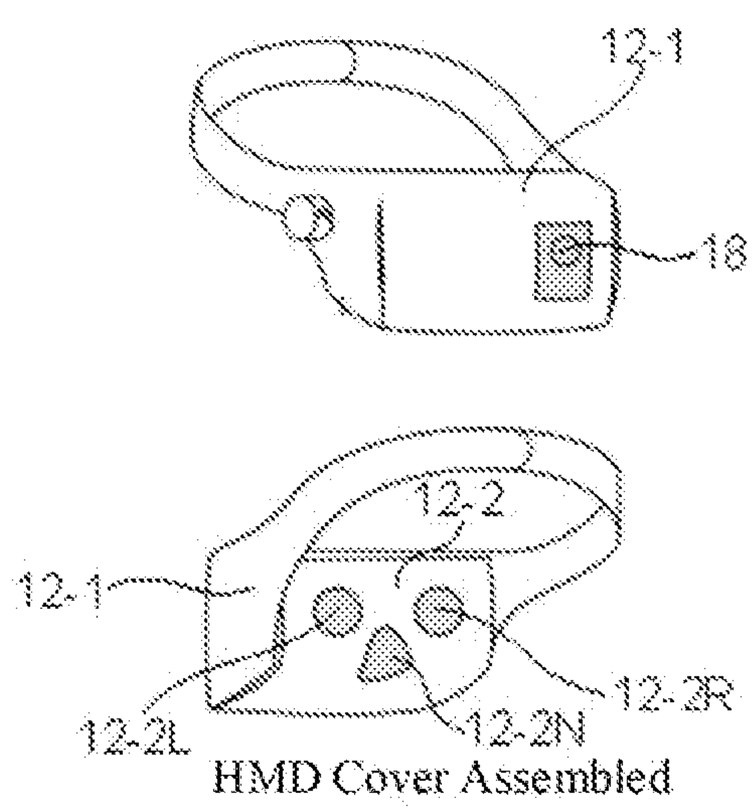

Fig. 3

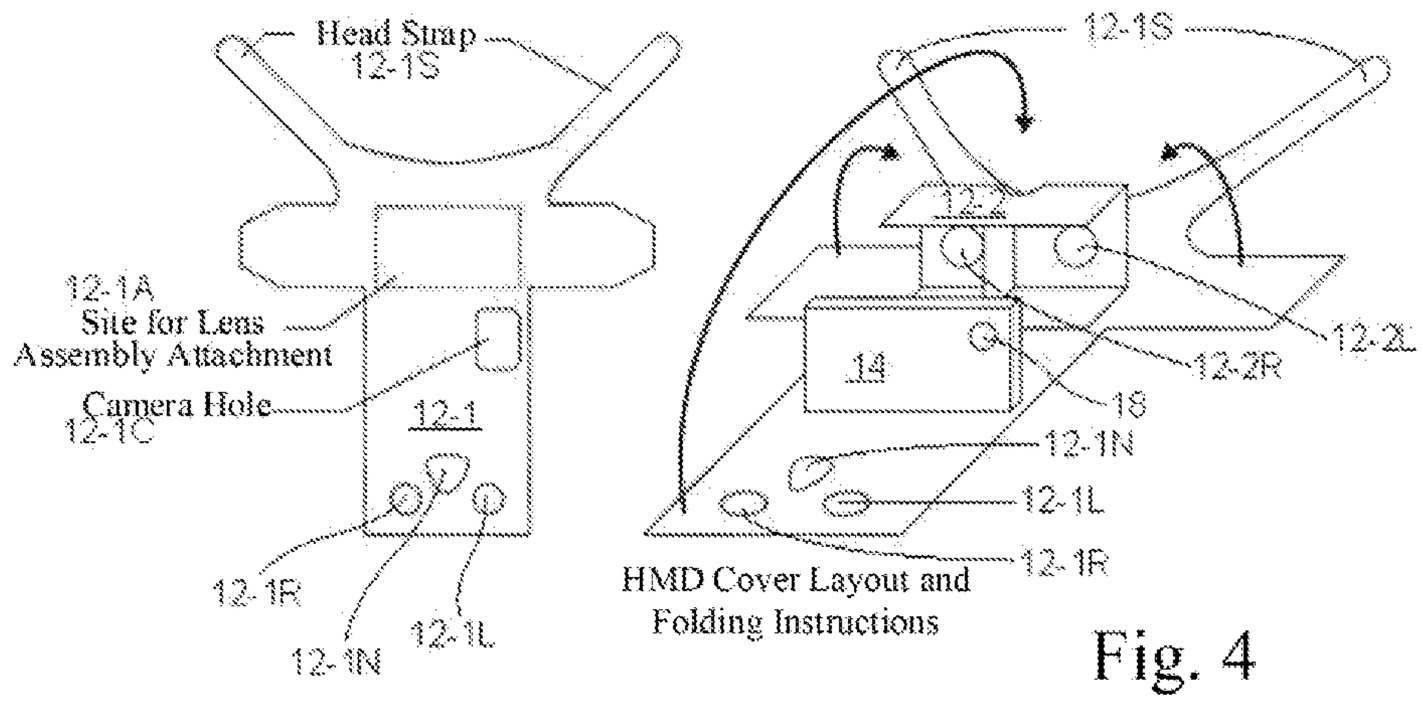

Fig. 4

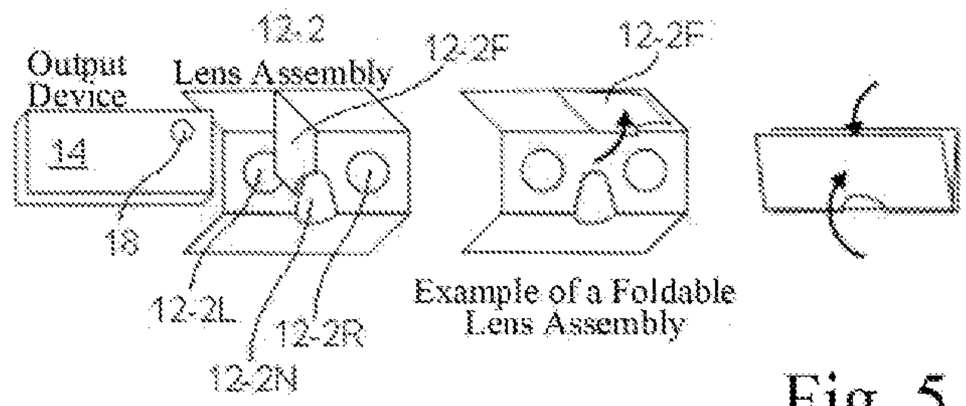

Fig. 5

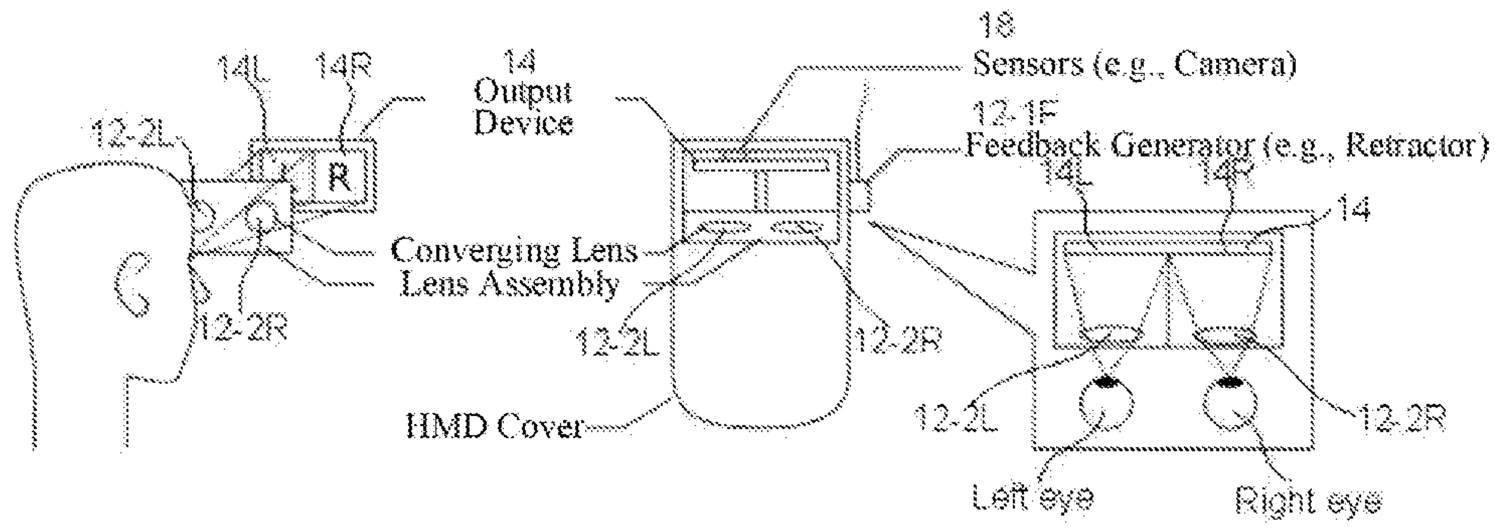

Fig. 6

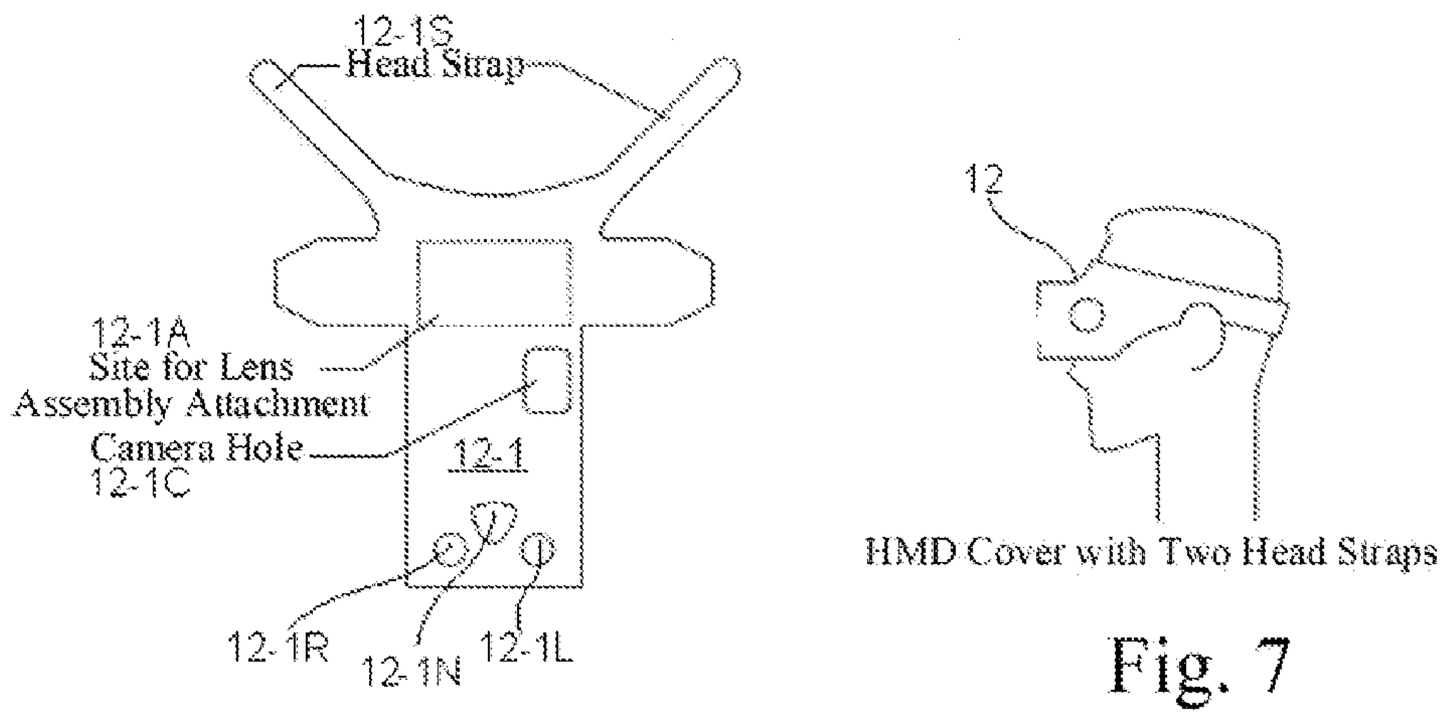

Fig. 7

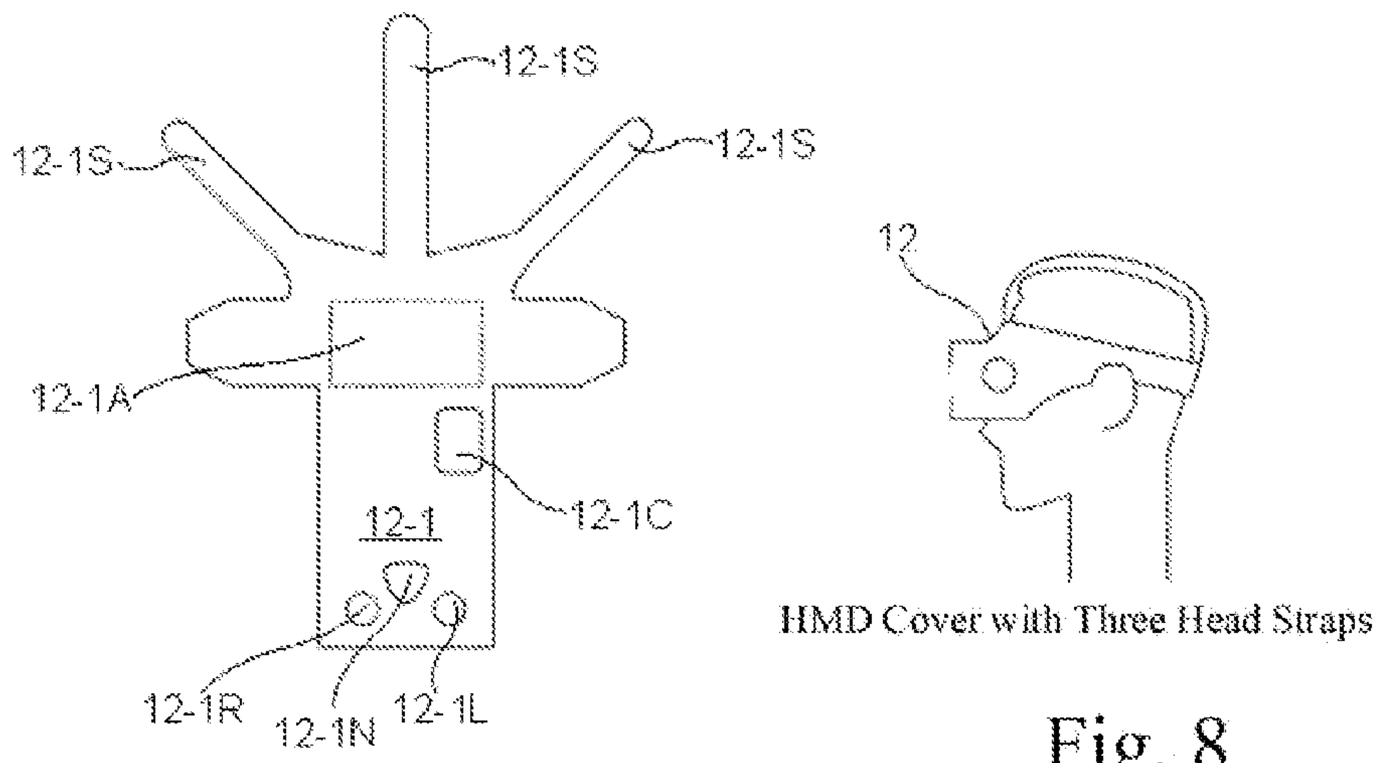

Fig. 8

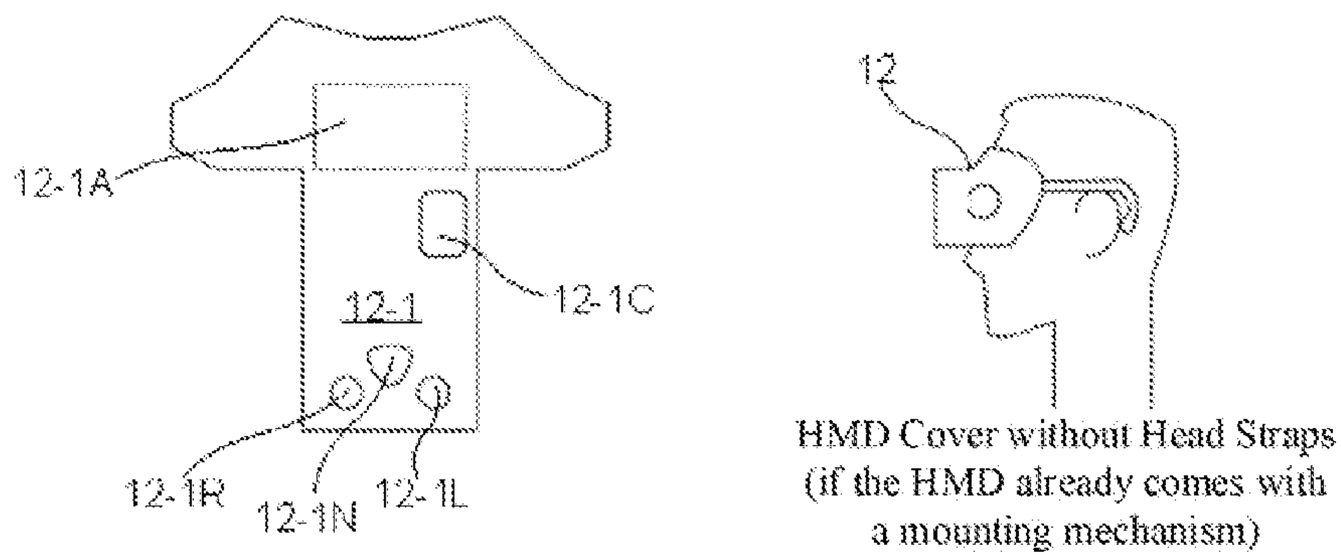

Fig. 9

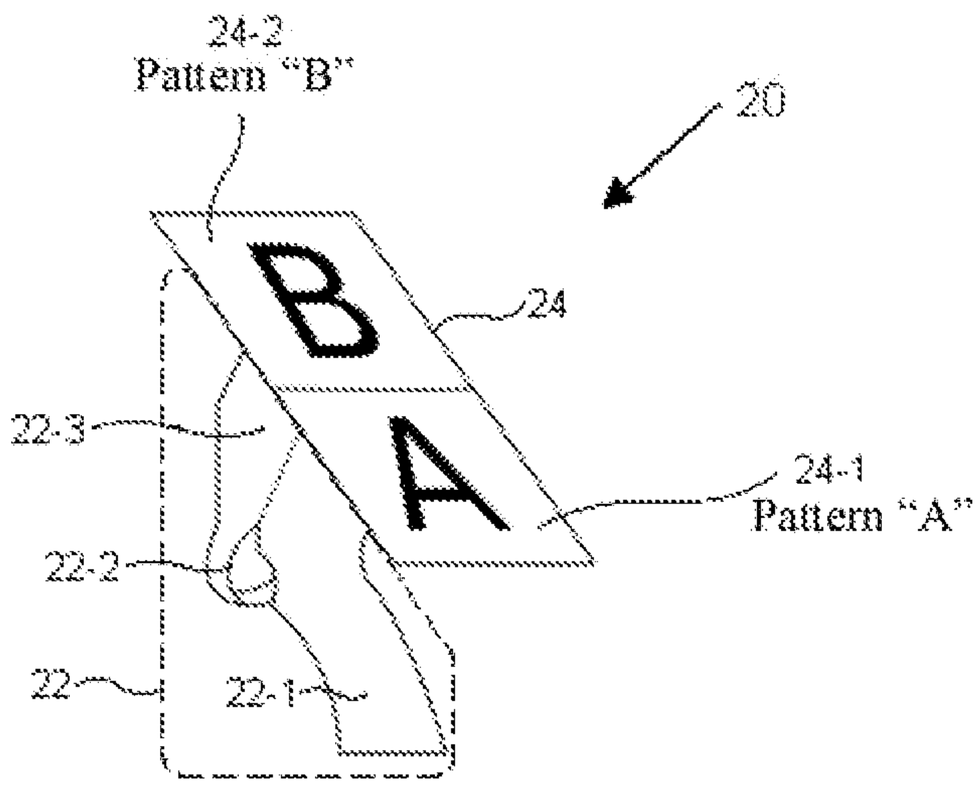

Fig. 10

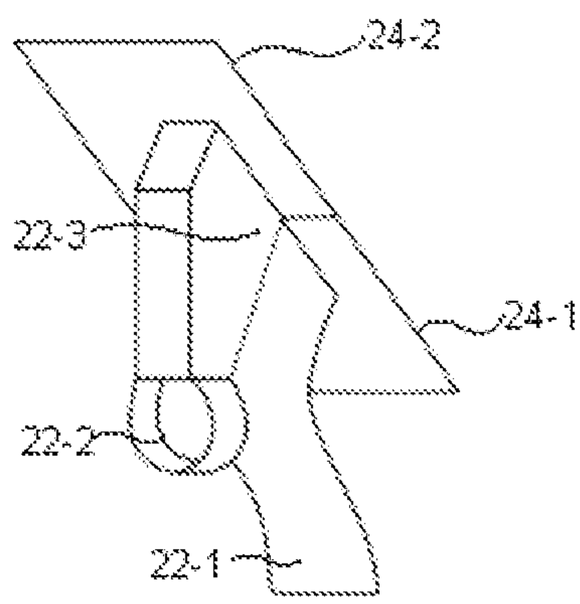

Fig. 11

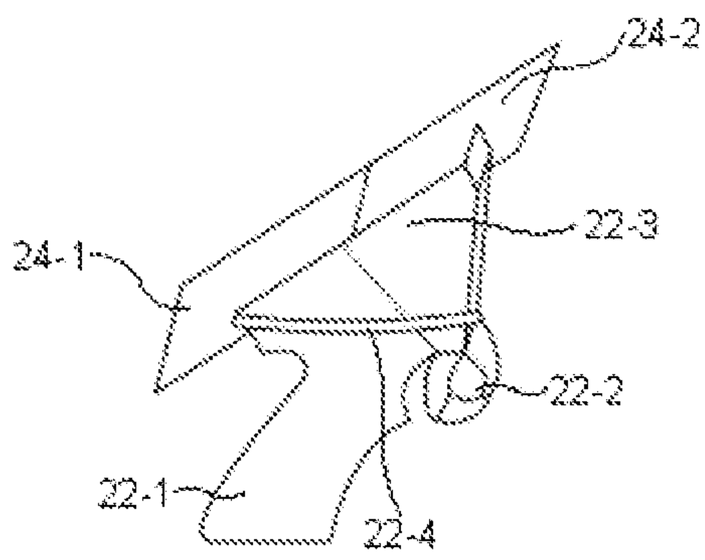

Fig. 12

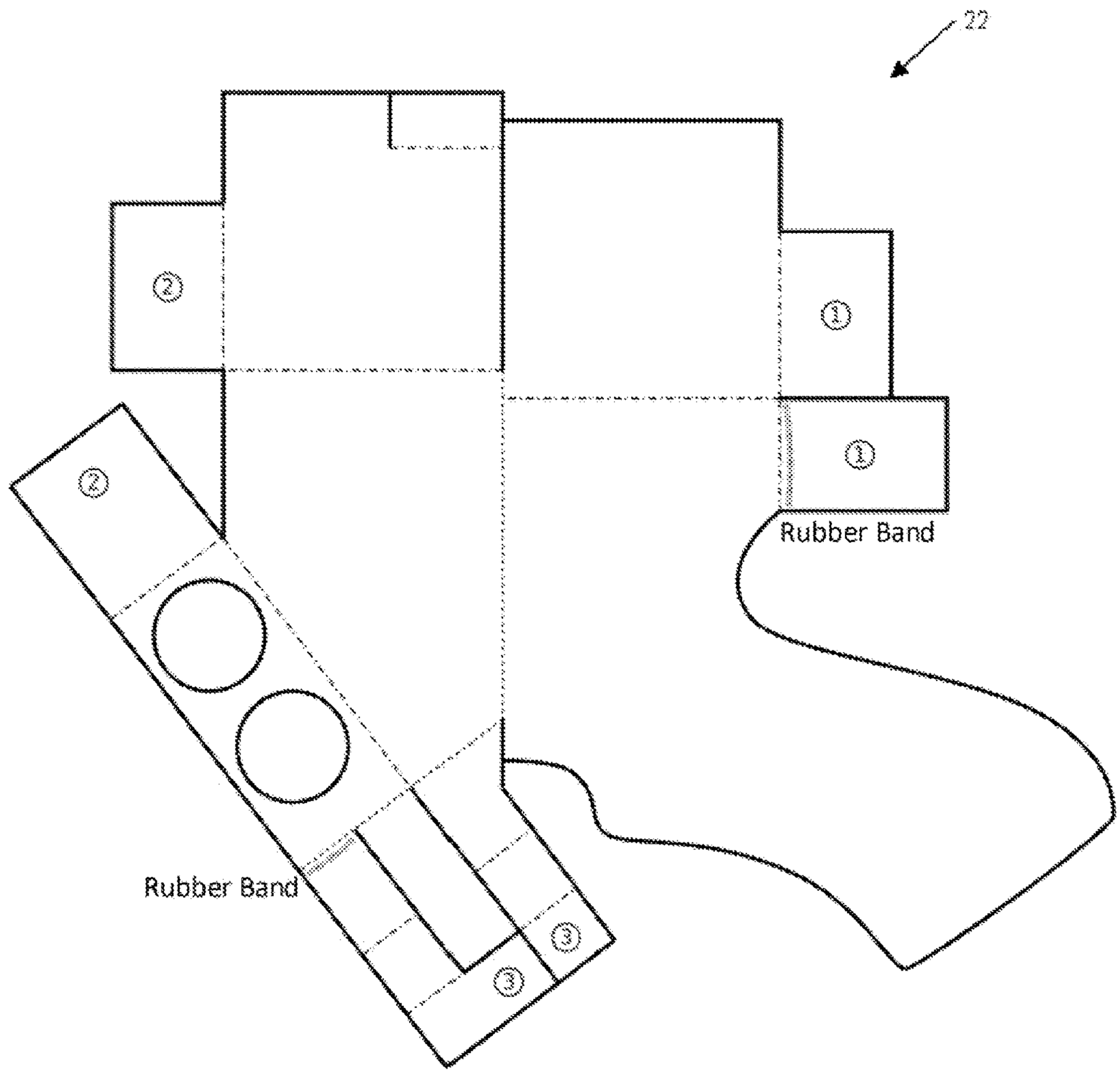

Fig. 13

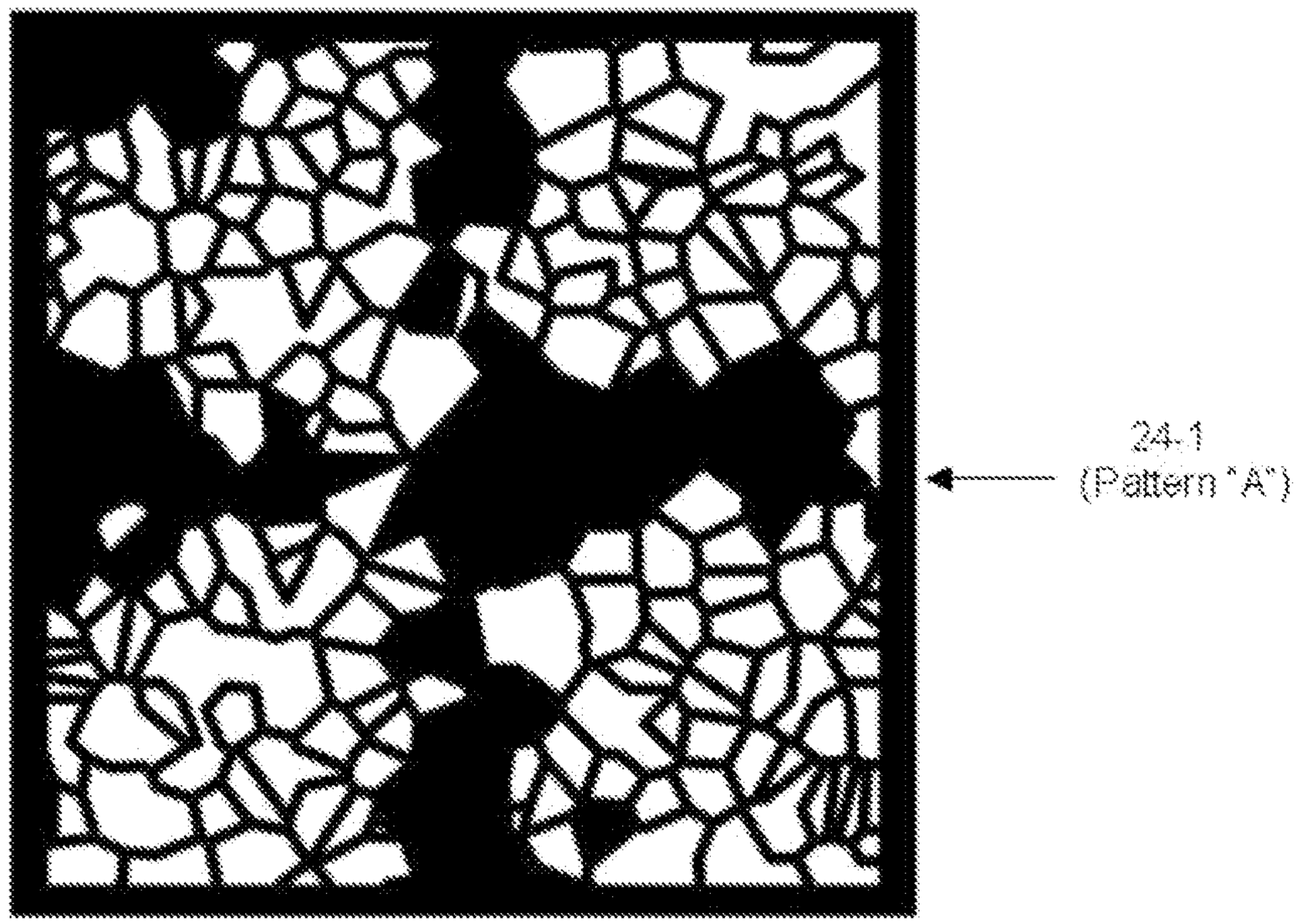

Fig. 14

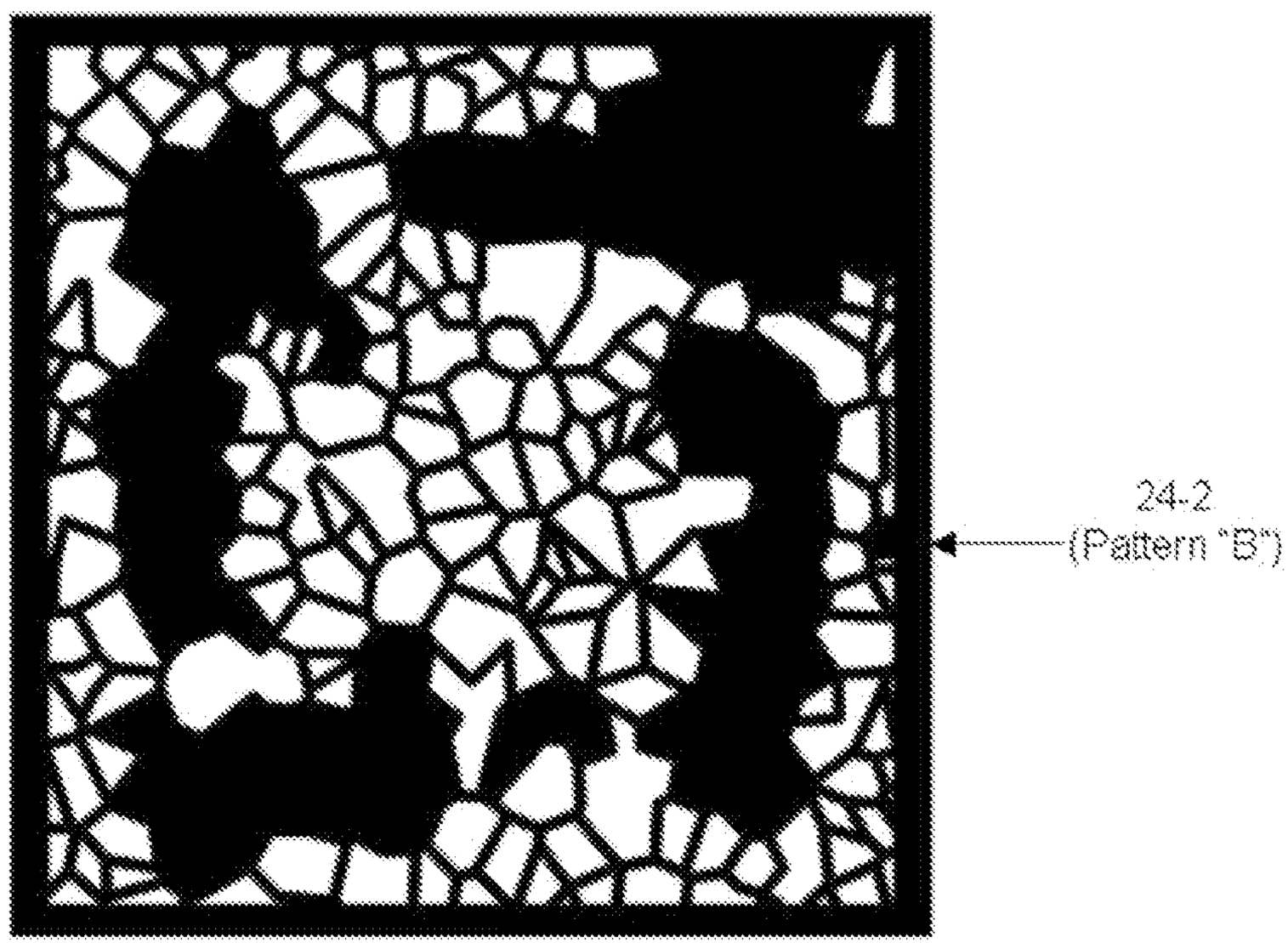

Fig. 15

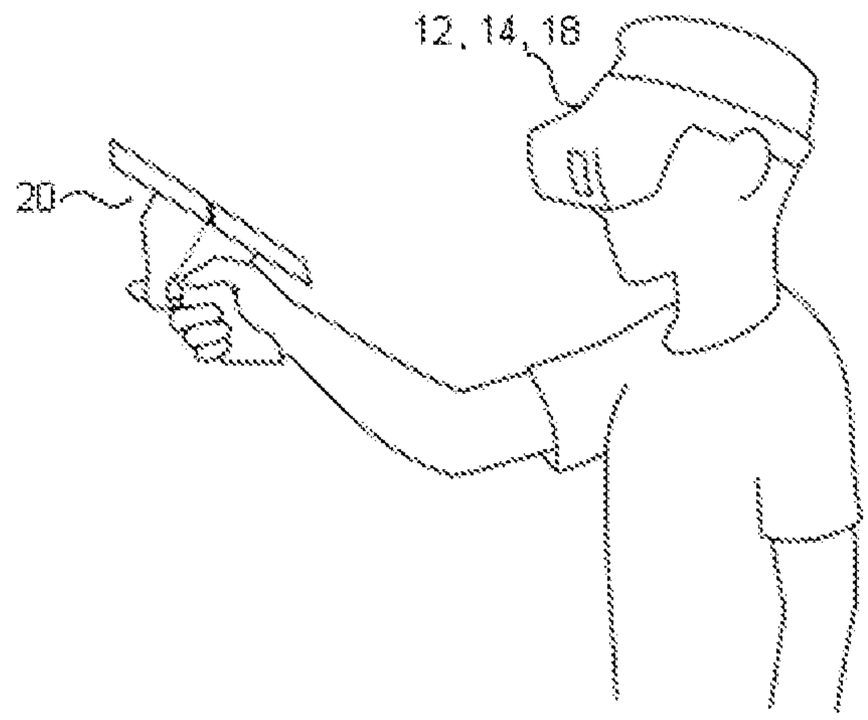

Fig. 16

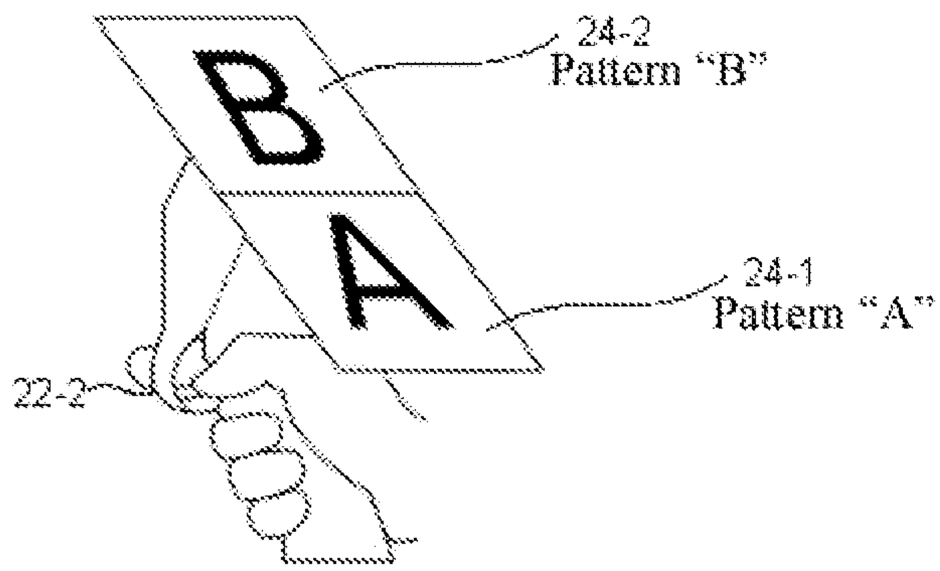

Fig. 17

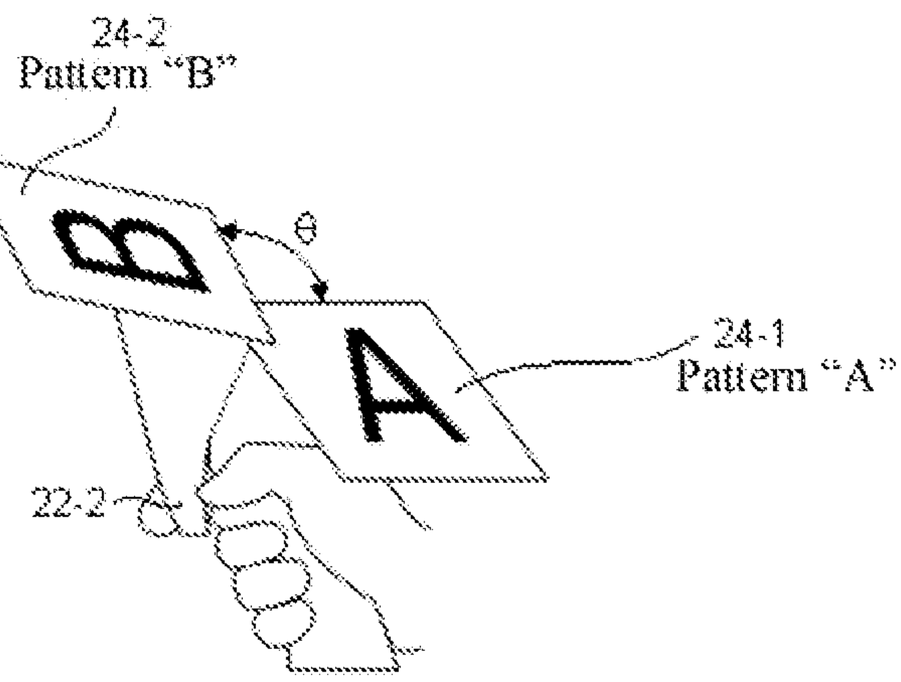

Fig. 18

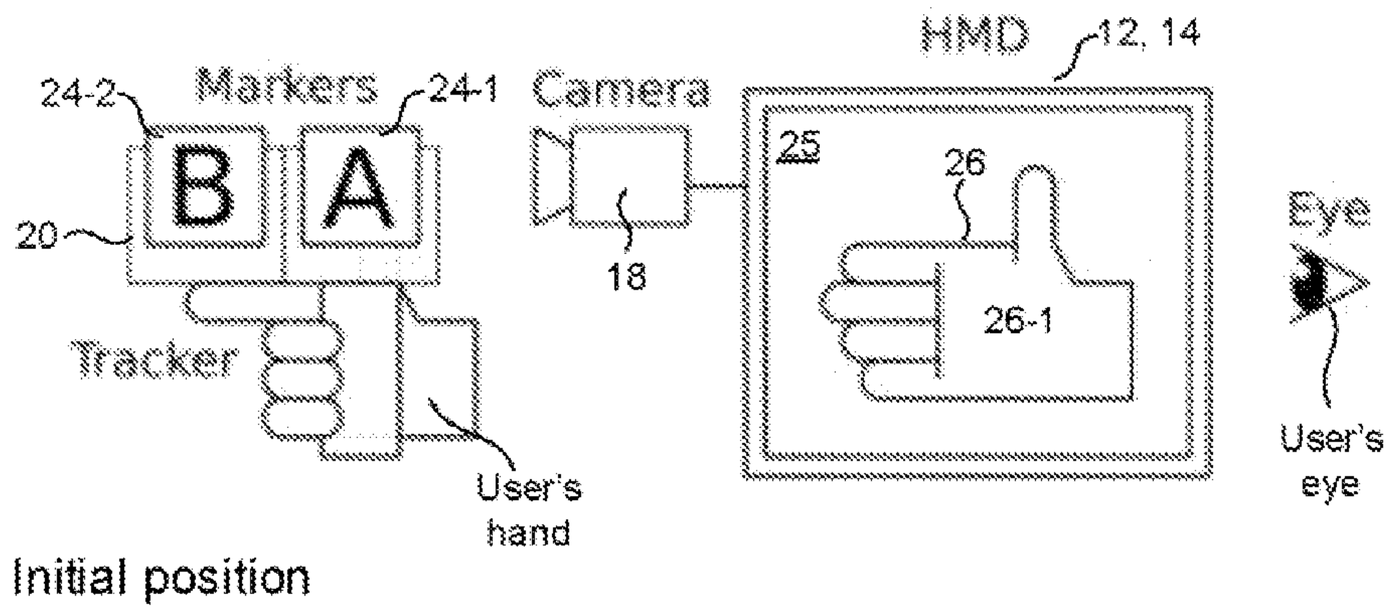
HMD
12, 14
24-2
Markers
24-1
Camera
B
A
20
18
25
26
26-1
Eye
Tracker
User's hand
User's eye
Initial position

Fig. 19

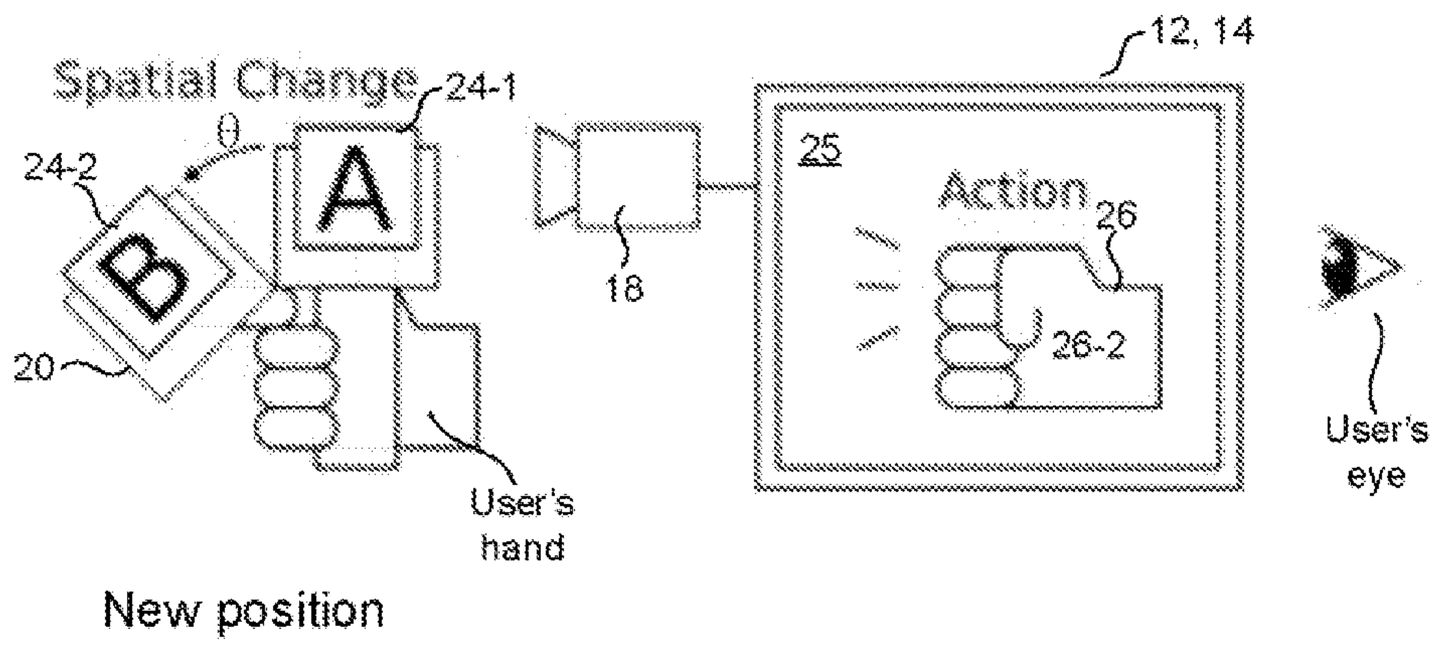
12, 14
Spatial Change
24-1
θ
24-2
A
B
20
18
25
Action
26
26-2
User's hand
User's eye
New position

Fig. 20

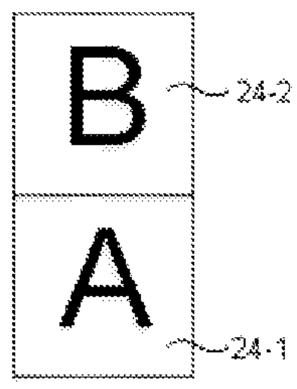

Fig. 21

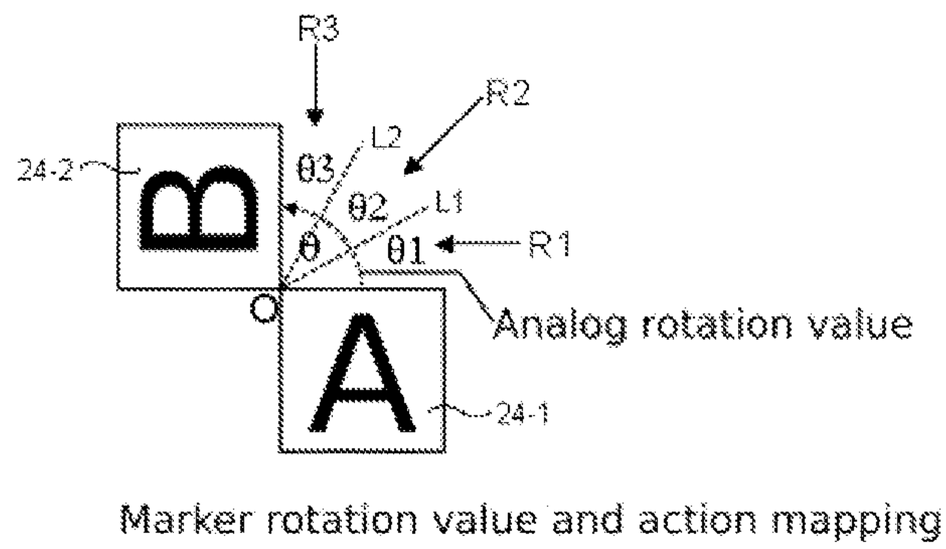

Fig. 22

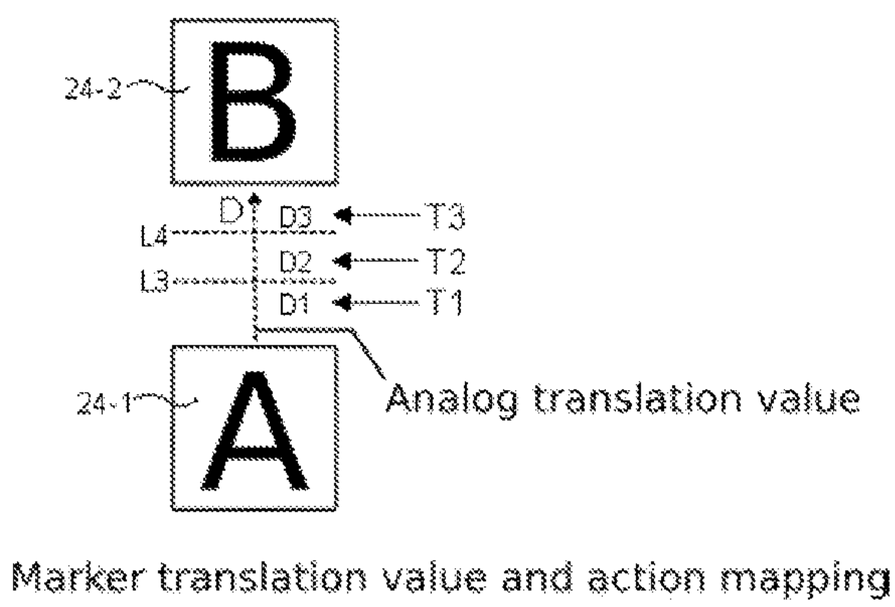

Fig. 23

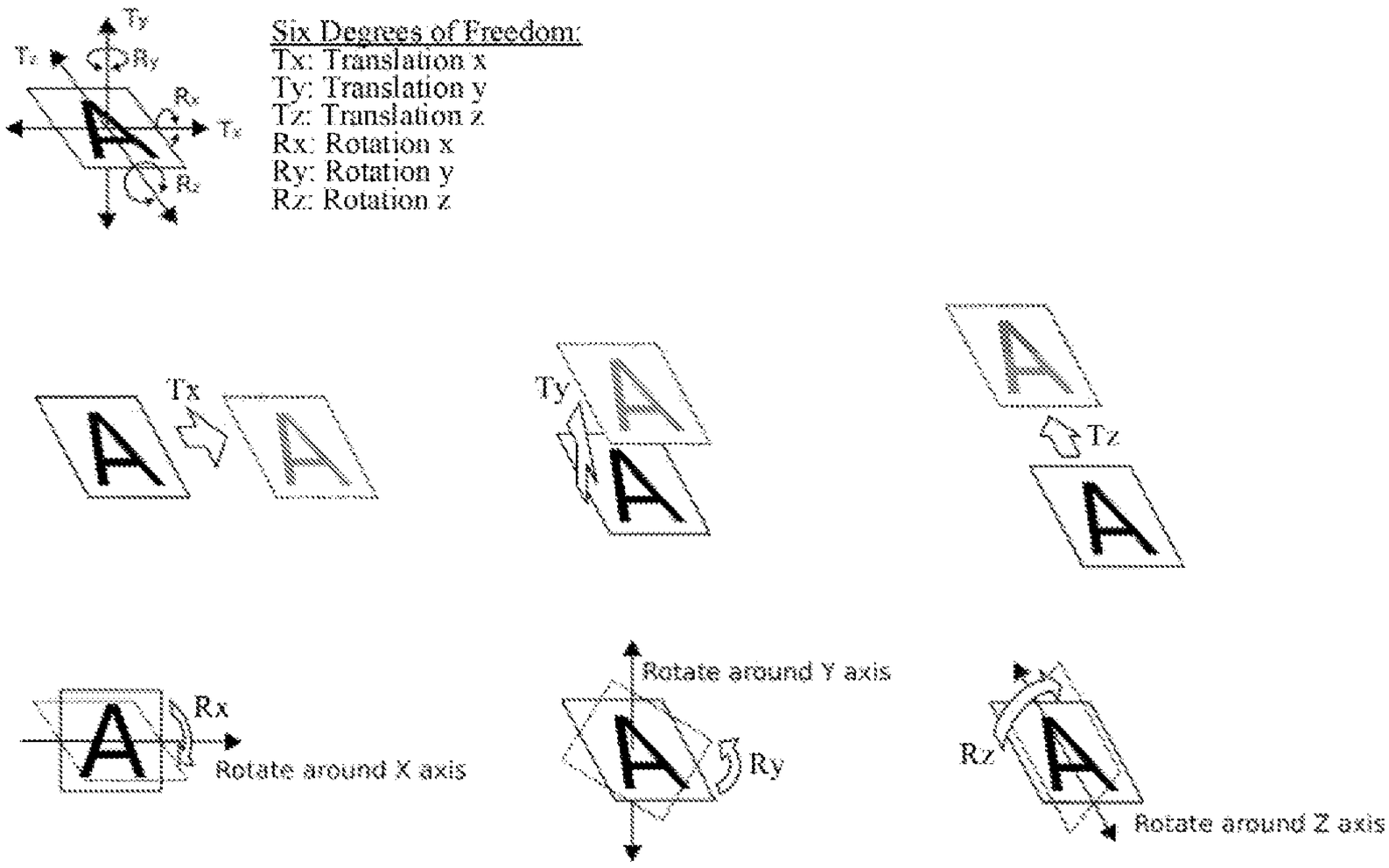
Six Degrees of Freedom:
Tx: Translation x
Ty: Translation y
Tz: Translation z
Rx: Rotation x
Ry: Rotation y
Rz: Rotation z
Tx
Ty
Tz
Rx
Rotate around X axis
Rotate around Y axis
Ry
Rz
Rotate around Z axis

Fig. 24

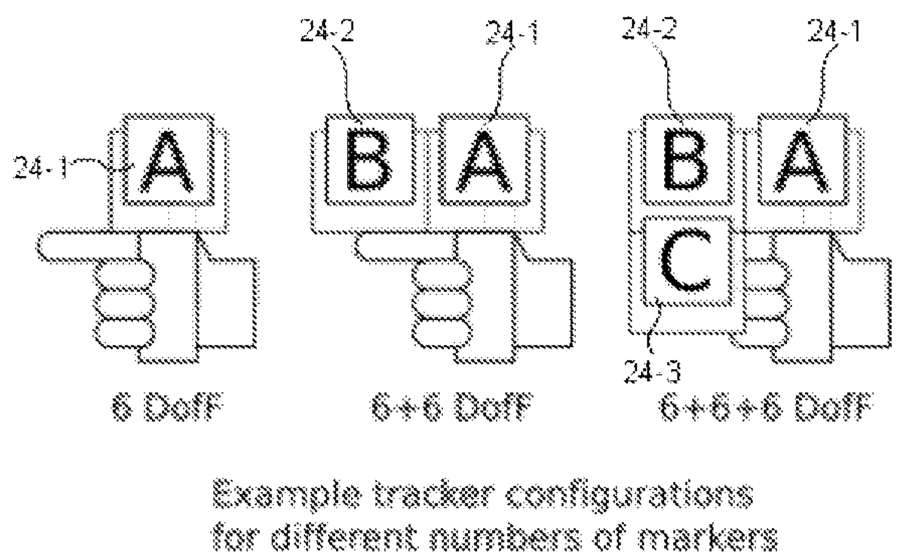
24-2
24-1
24-2
24-1
24-1
A
B
A
B
A
C
24-3
6 DoF
6+6 DoF
6+6+6 DoF
Example tracker configurations
for different numbers of markers

Fig. 25

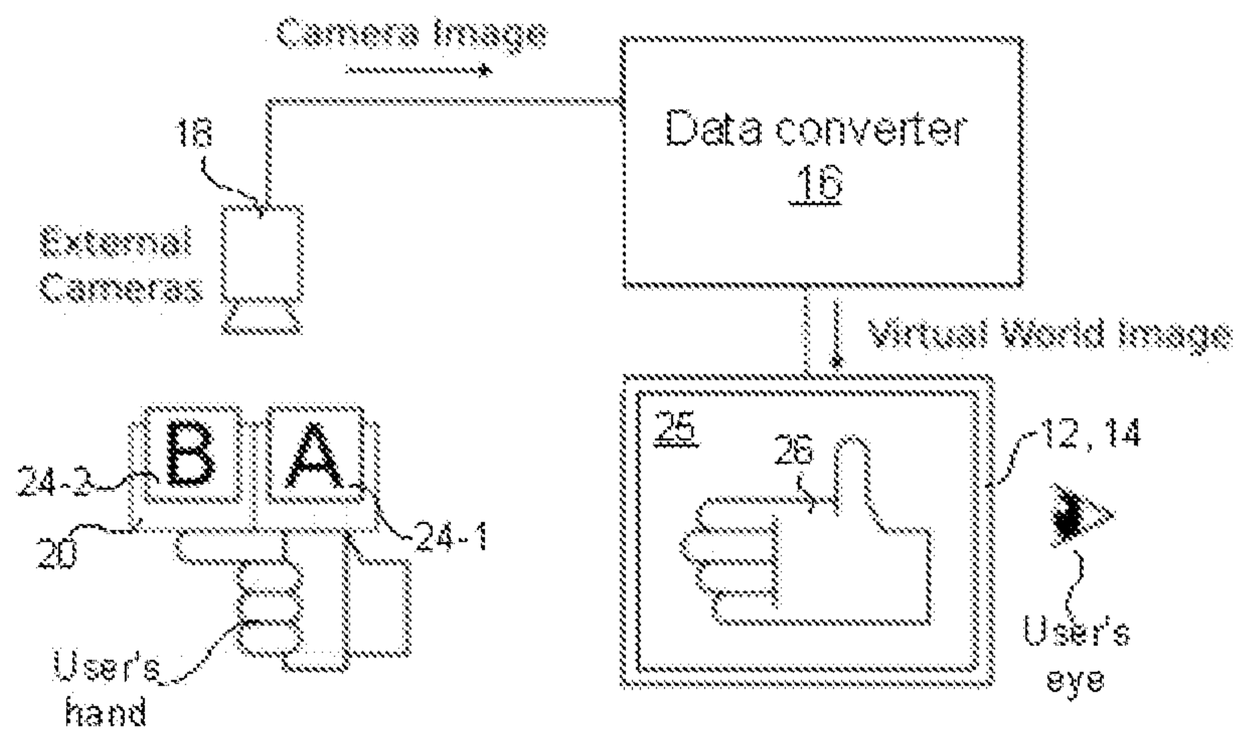

Fig. 26

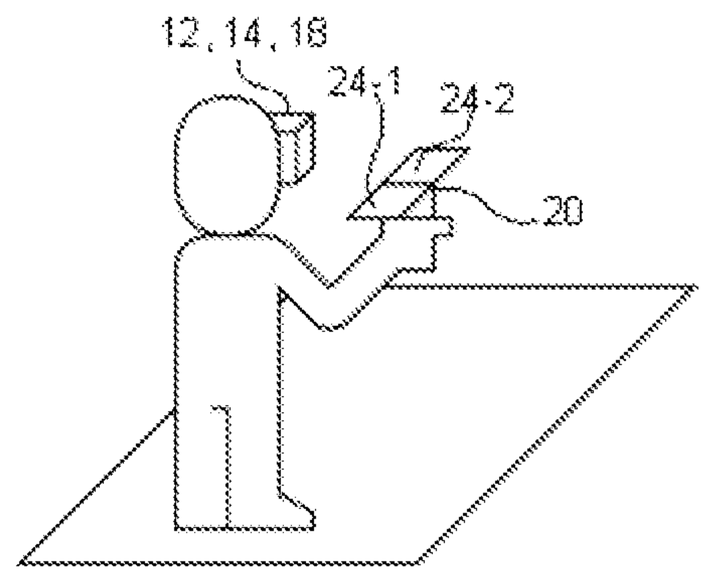

Single camera setup

DOF Range:
Tx = 1 ft
Ty = 1 ft
Tz = 5 ft
Rx = 180 degrees
Ry = 180 degrees
Rz = 360 degrees

Fig. 27

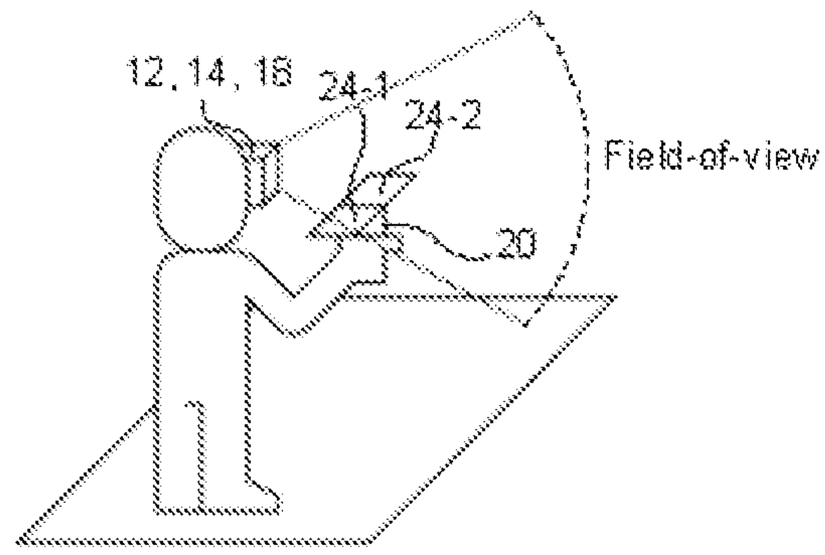

Single camera setup

DOF Range:
Tx = 1 ft
Ty = 1 ft
Tz = 5 ft
Rx = 180 degrees
Ry = 180 degrees
Rz = 360 degrees

Fig. 28

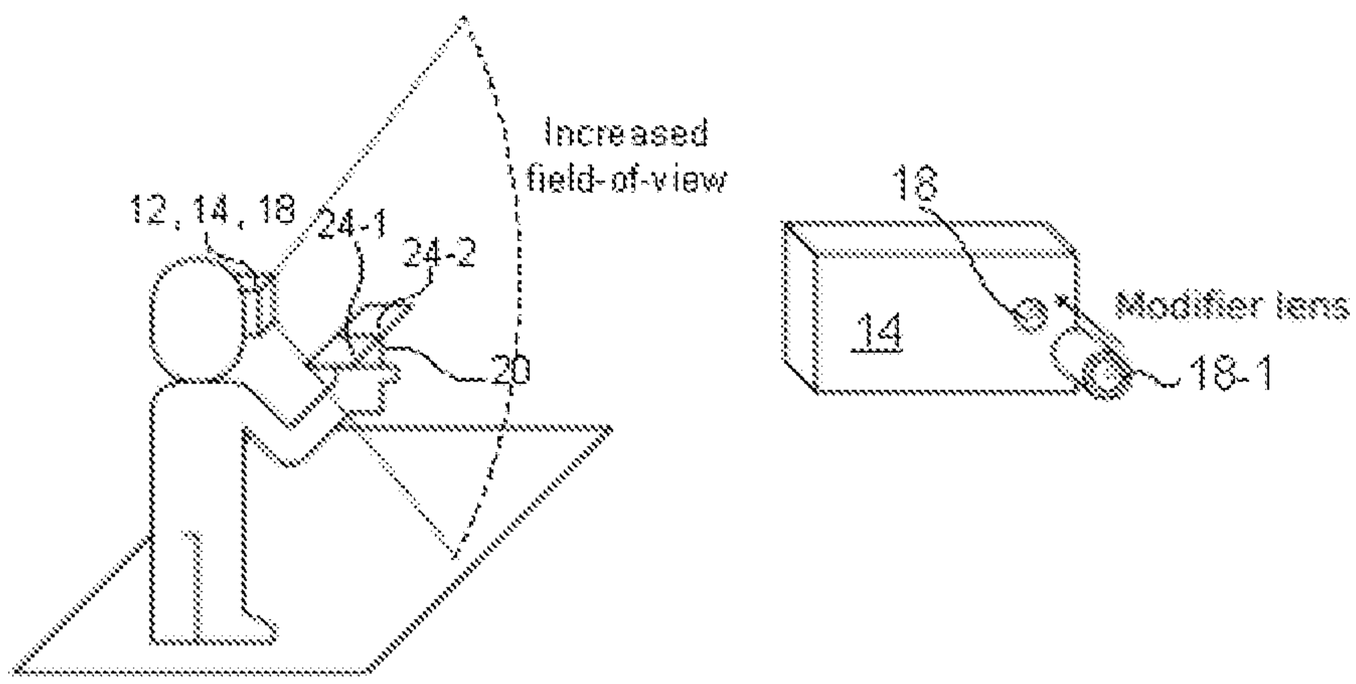

Single camera setup with modifier lens

DOF Range:
Tx = 3 ft
Ty = 3 ft
Tz = 5 ft
Rx = 180 degrees
Ry = 180 degrees
Rz = 360 degrees

Fig. 29

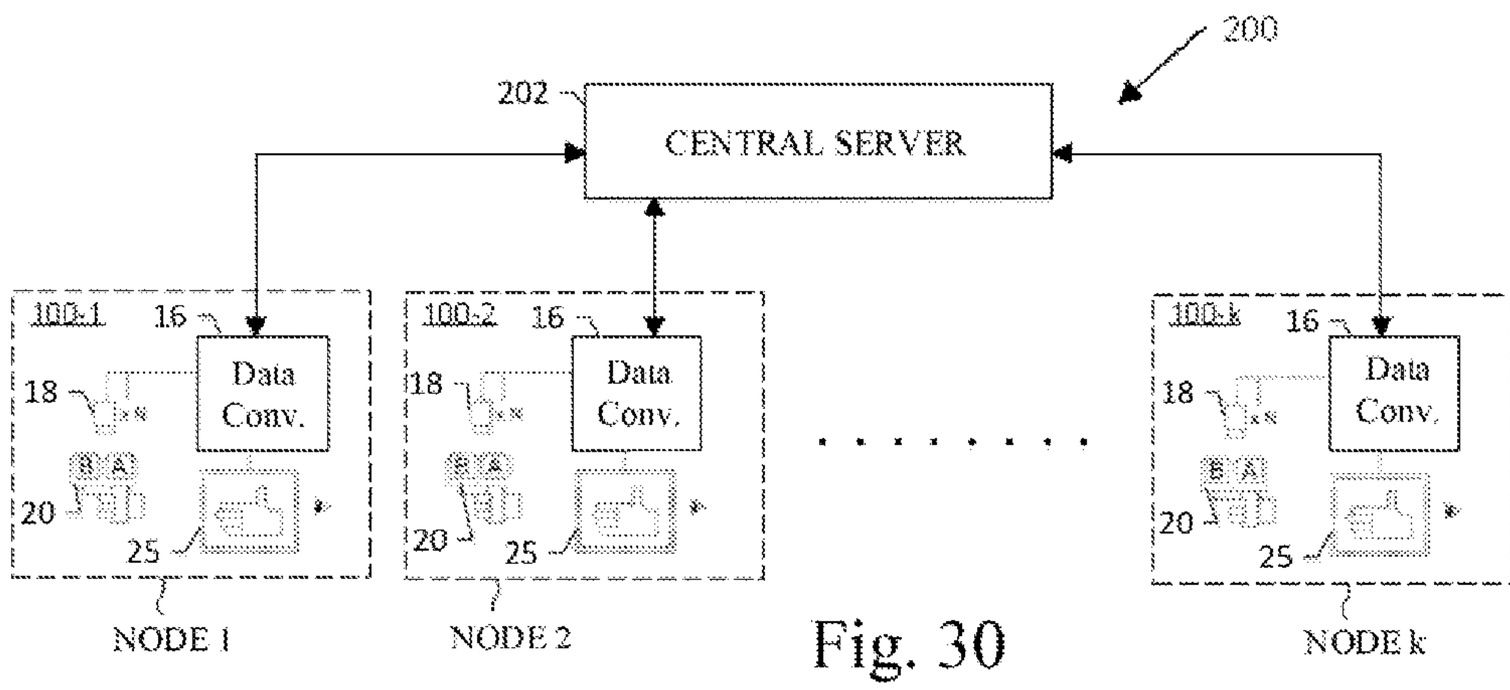

Fig. 30

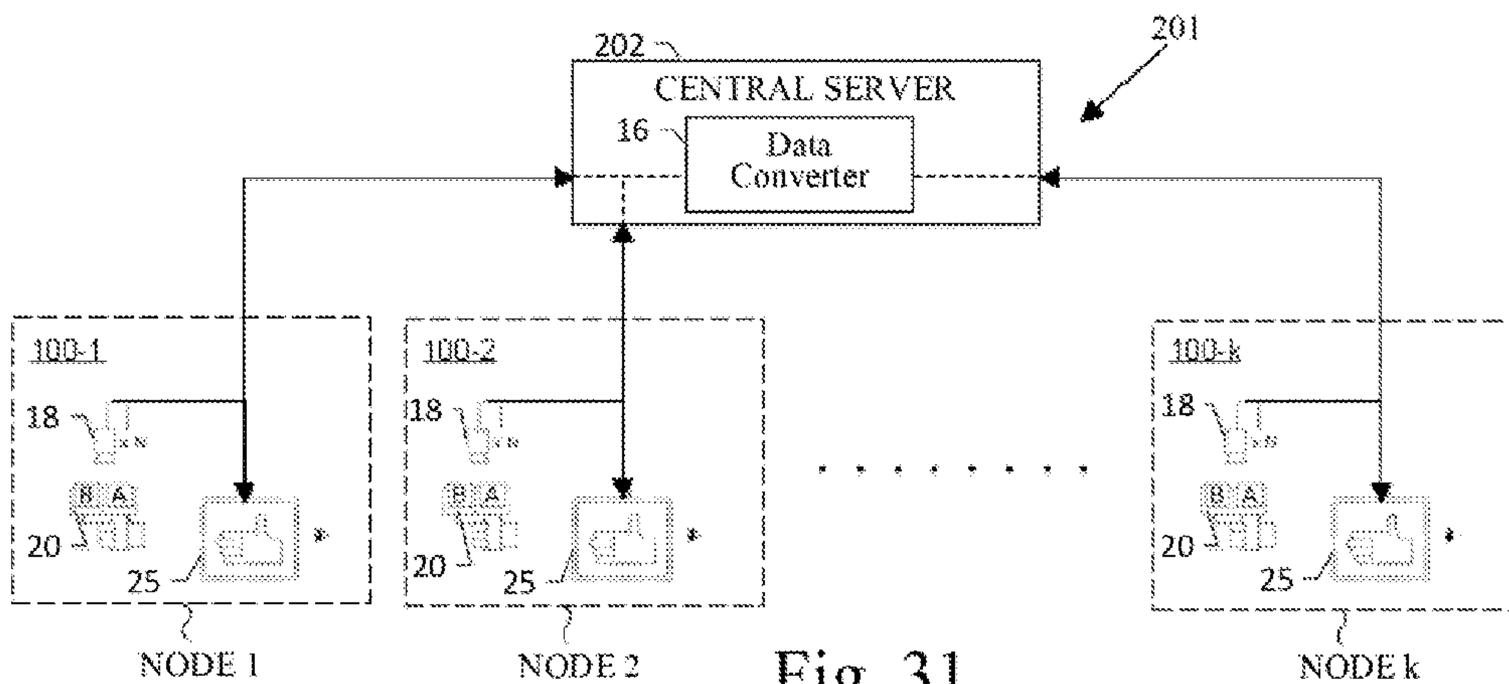

Fig. 31

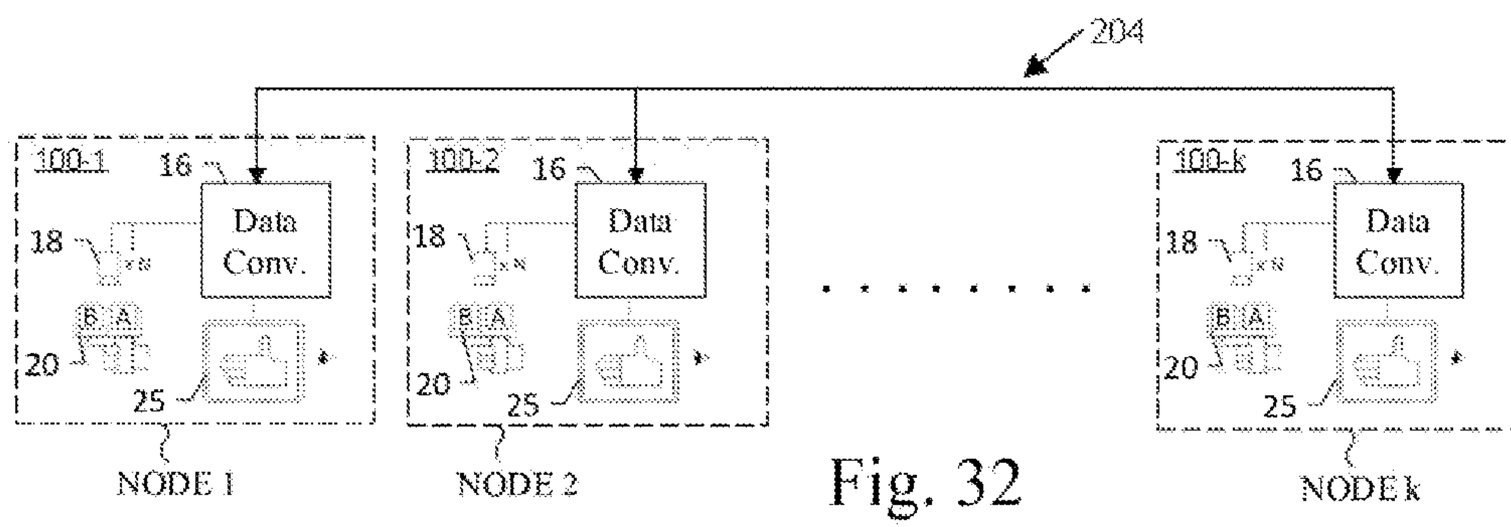

Fig. 32

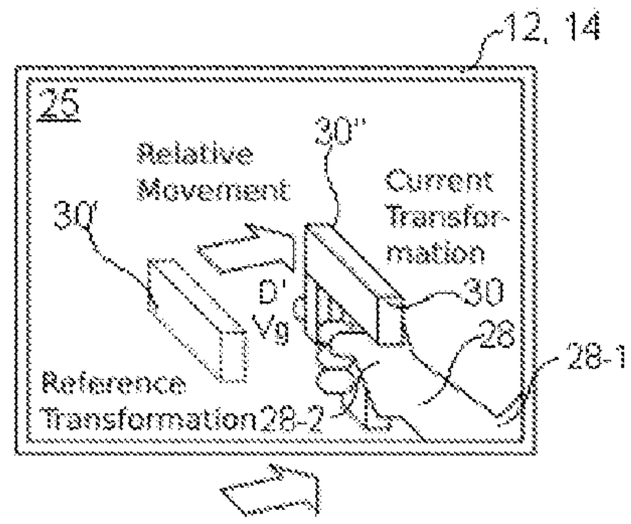

Illustration of navigation interaction

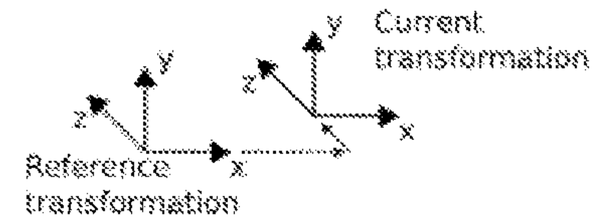

Vcharacter = C x (Treference – Tcurrent)
where
Vcharacter: Character Velocity
C: Speed Constant
Treference: Reference Transformation
Tcurrent: Current Transformation

Fig. 33

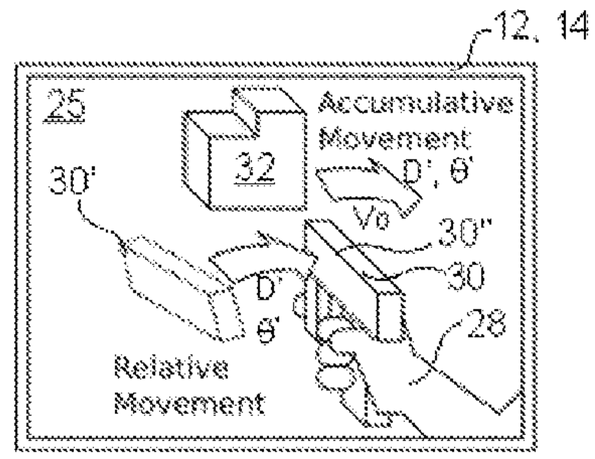

Illustration of accumulative telekinesis interaction

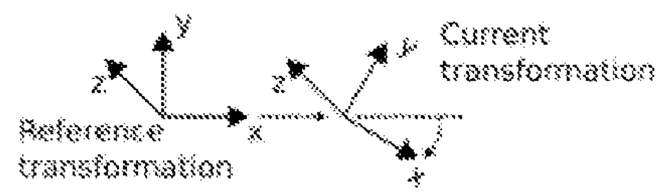

Vobject = C x (Treference – Tcurrent)
where
Vobject: Object Velocity
C: Speed Constant
Treference: Reference Transformation
Tcurrent: Current Transformation

Fig. 34

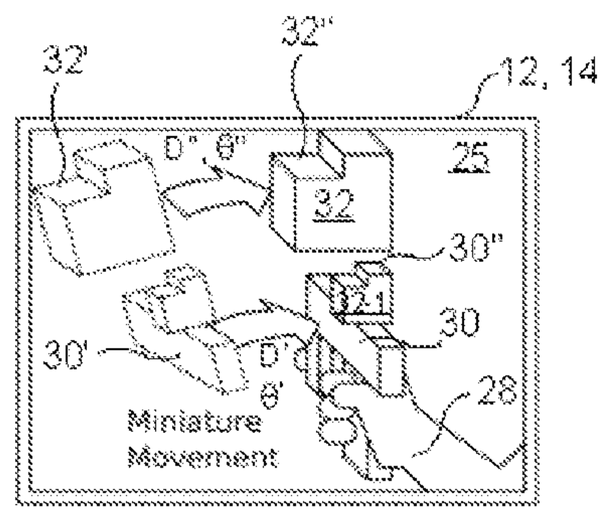

Illustration of miniature telekinesis interaction

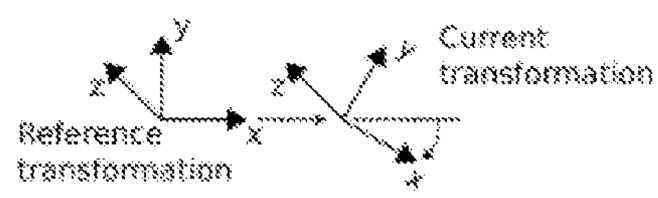

Tnew = Toriginal + S x (Treference – Tcurrent)
where
Tnew: New Object Transformation
Toriginal: Original Object Transformation
S: Scale Constant
Treference: Reference Transformation
Tcurrent: Current Transformation

Fig. 35

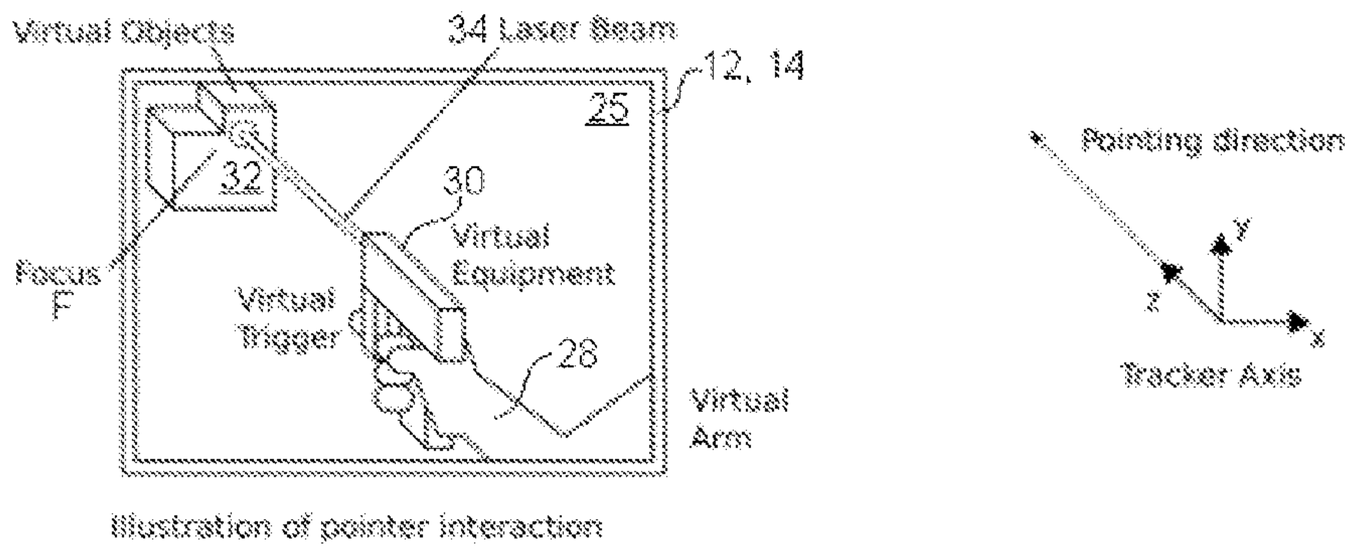

Fig. 36

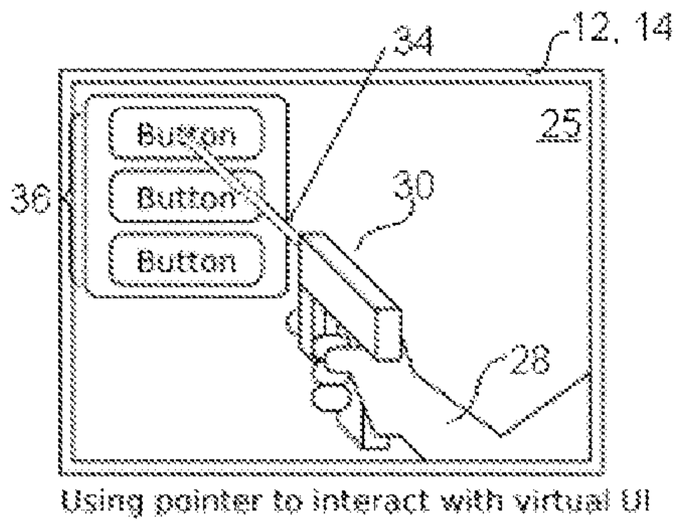

Fig. 37

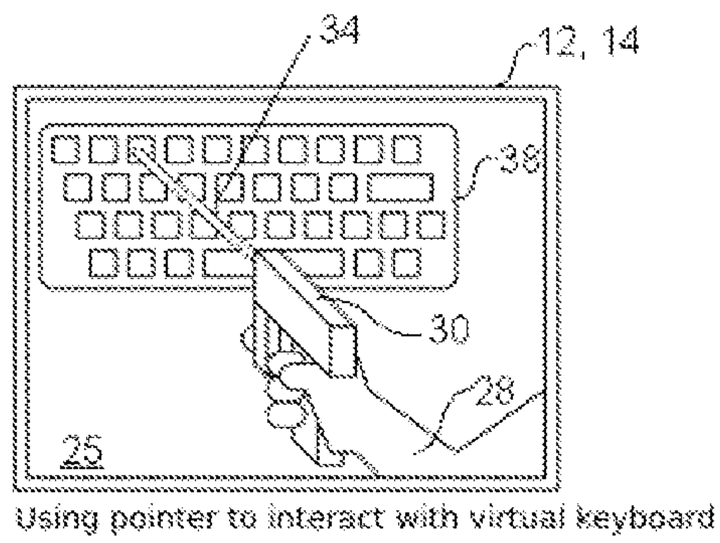

Fig. 38

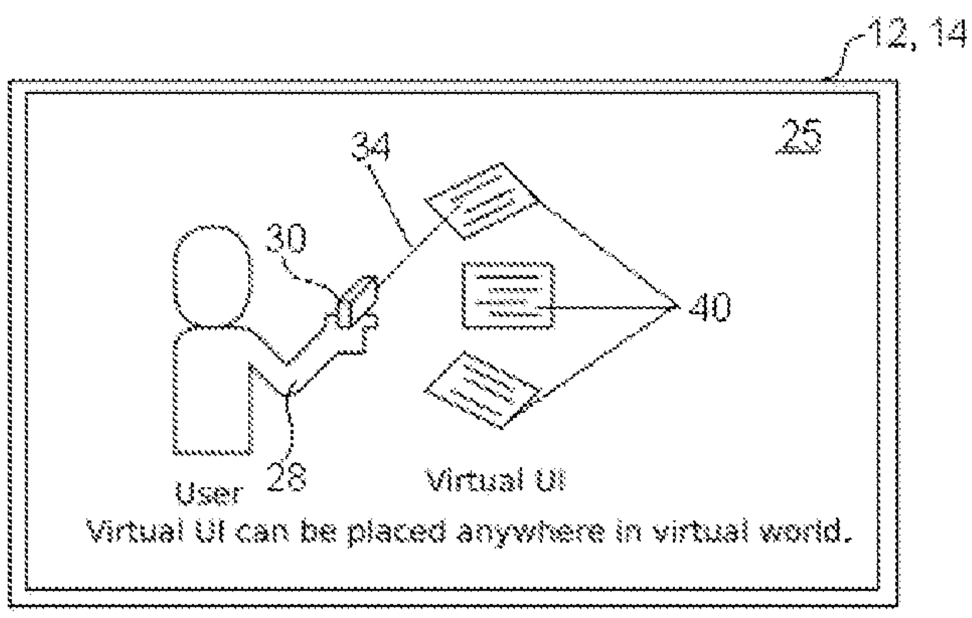

Fig. 39

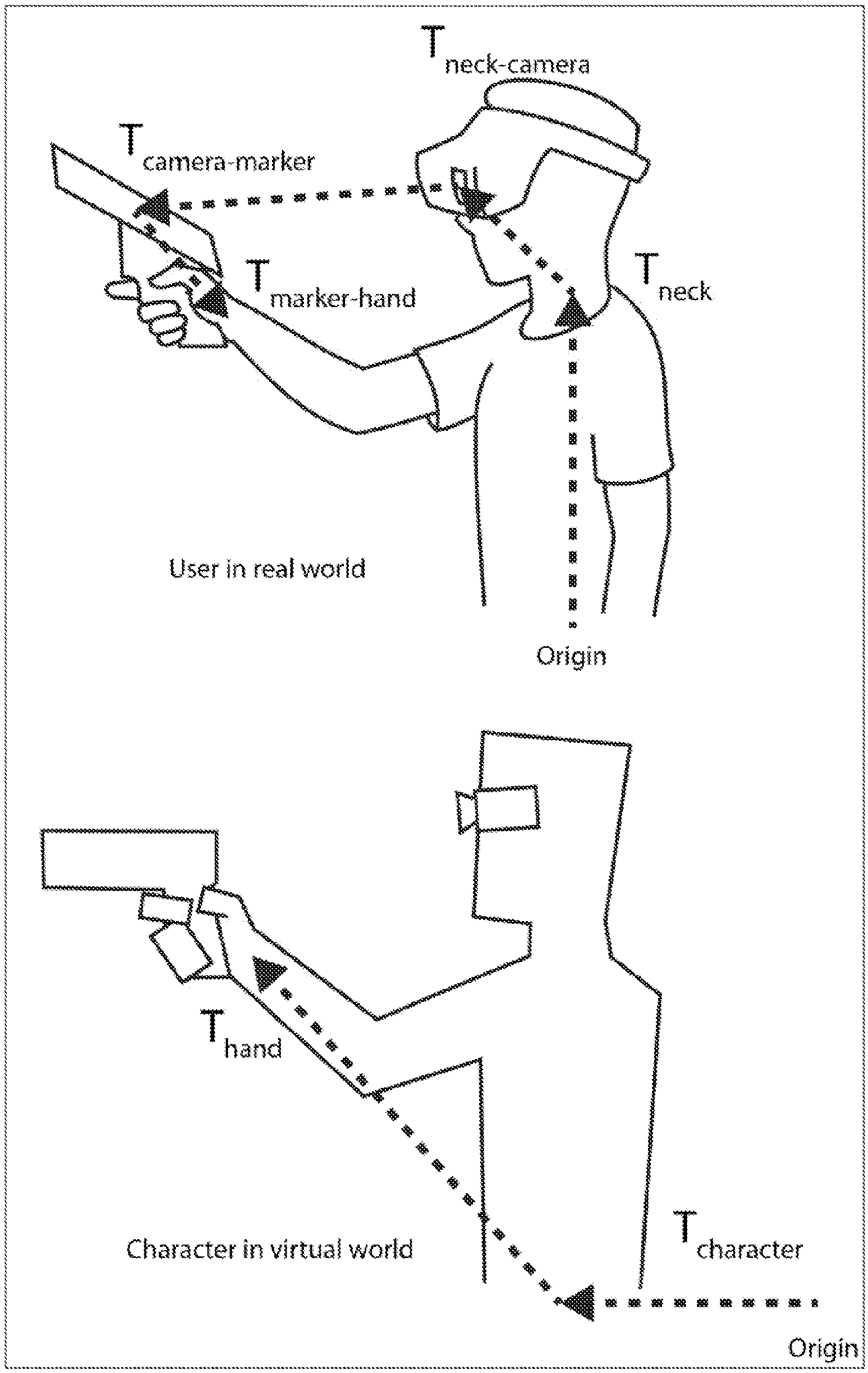
T neck-camera
T camera-marker
T marker-hand
T neck
User in real world
Origin
T hand
Character in virtual world
T character
Origin

Fig. 40

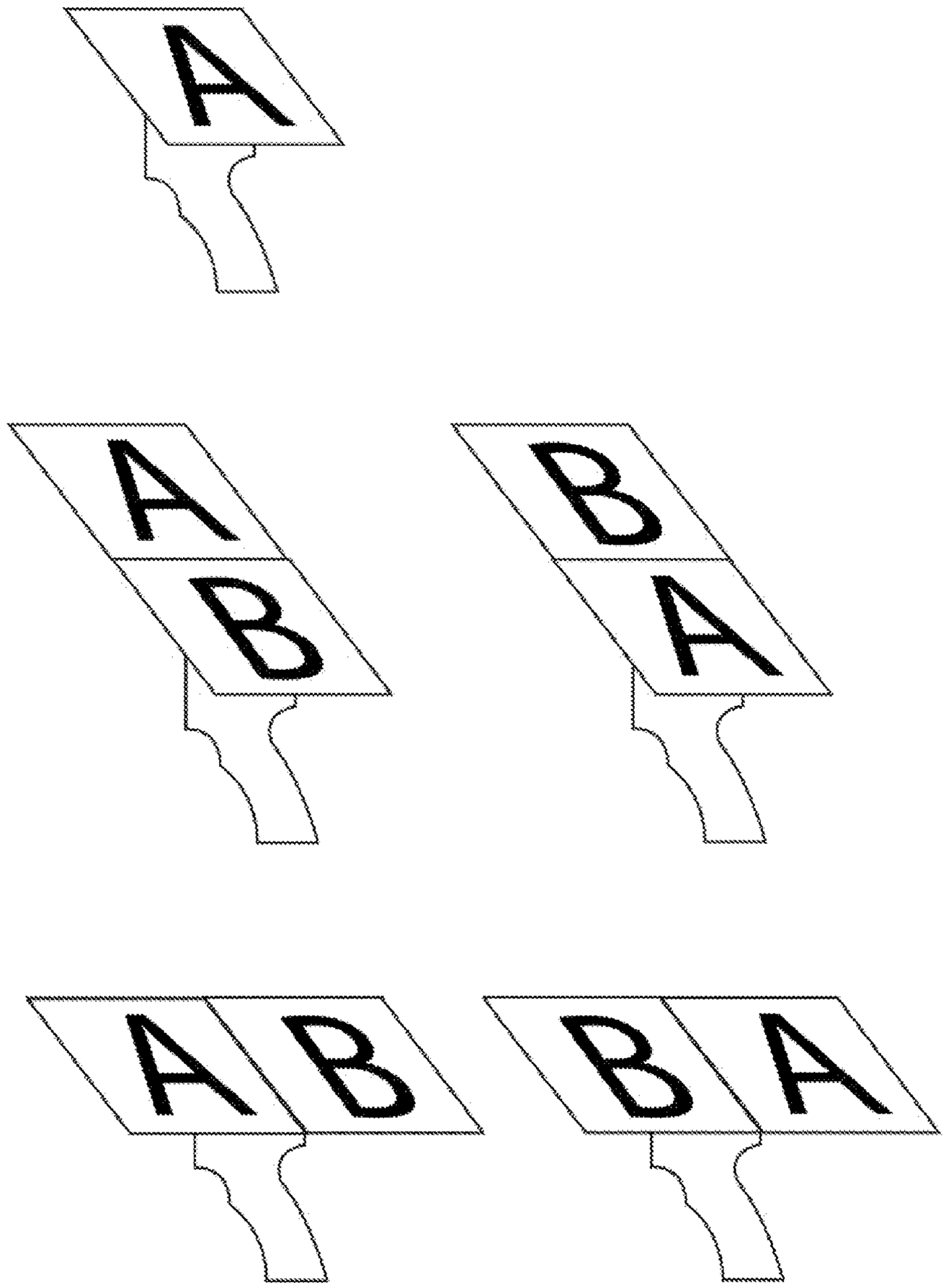

Tracker with one or two markers in different configurations

Fig. 41

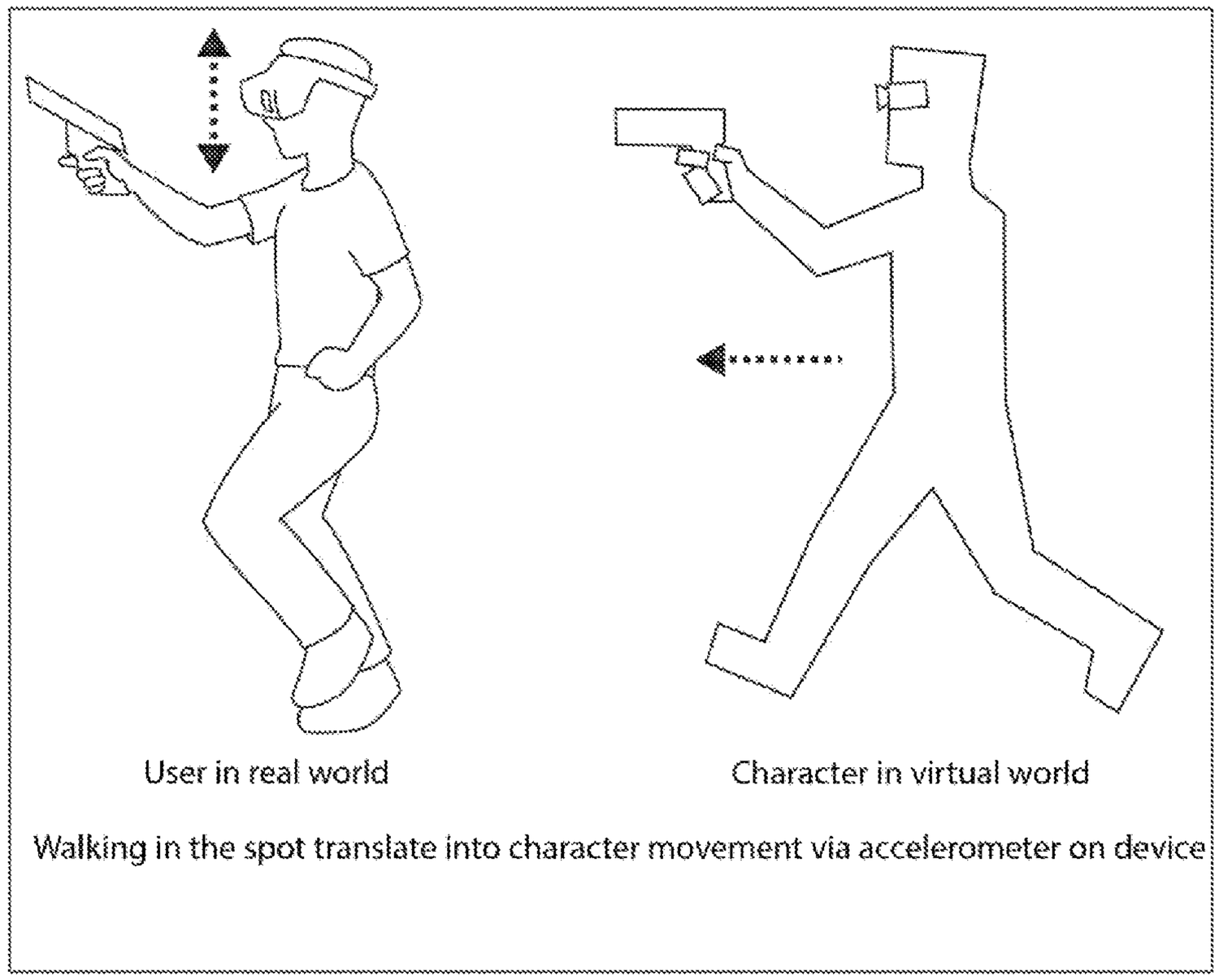
User in real world
Character in virtual world
Walking in the spot translate into character movement via accelerometer on device

Fig. 42

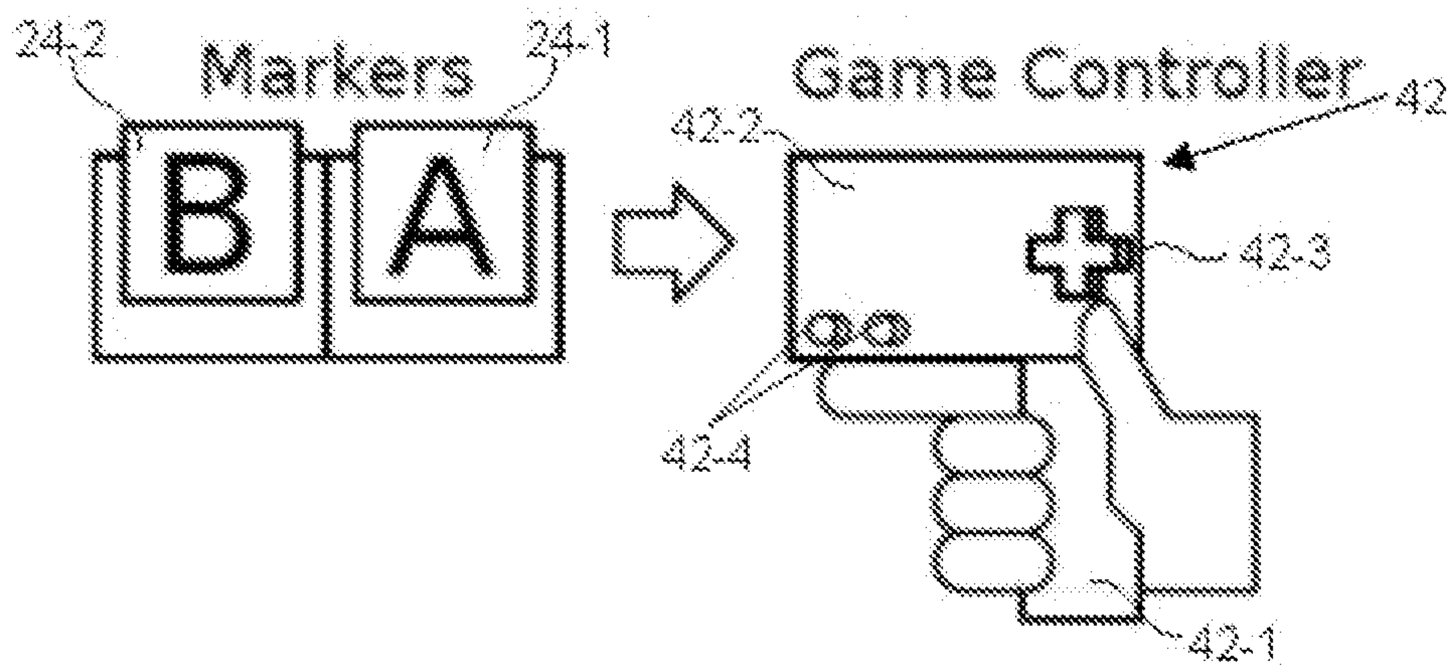

Fig. 43

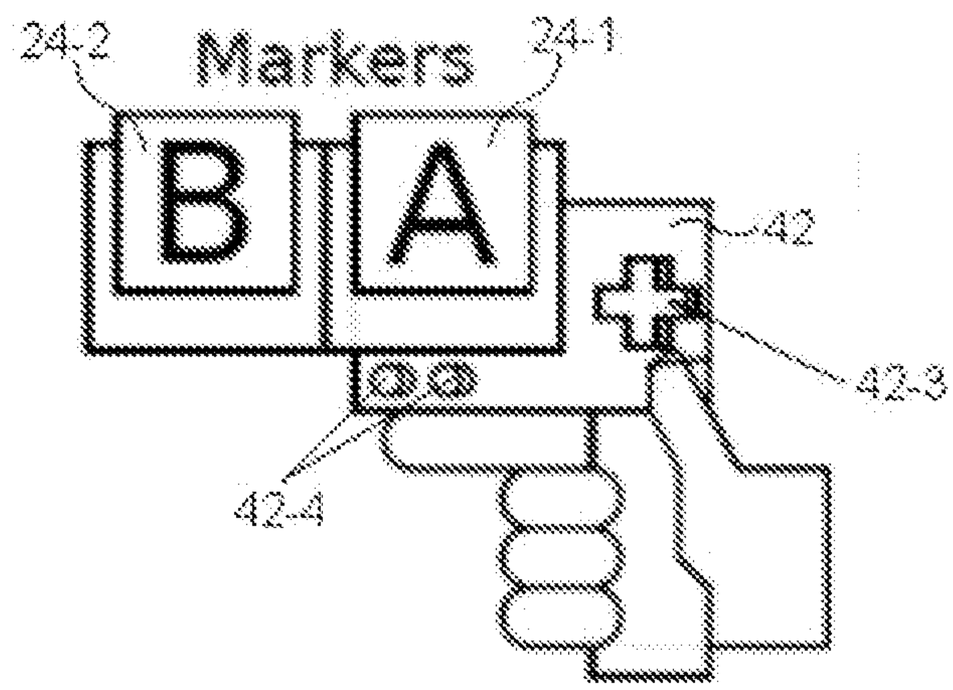

Fig. 44

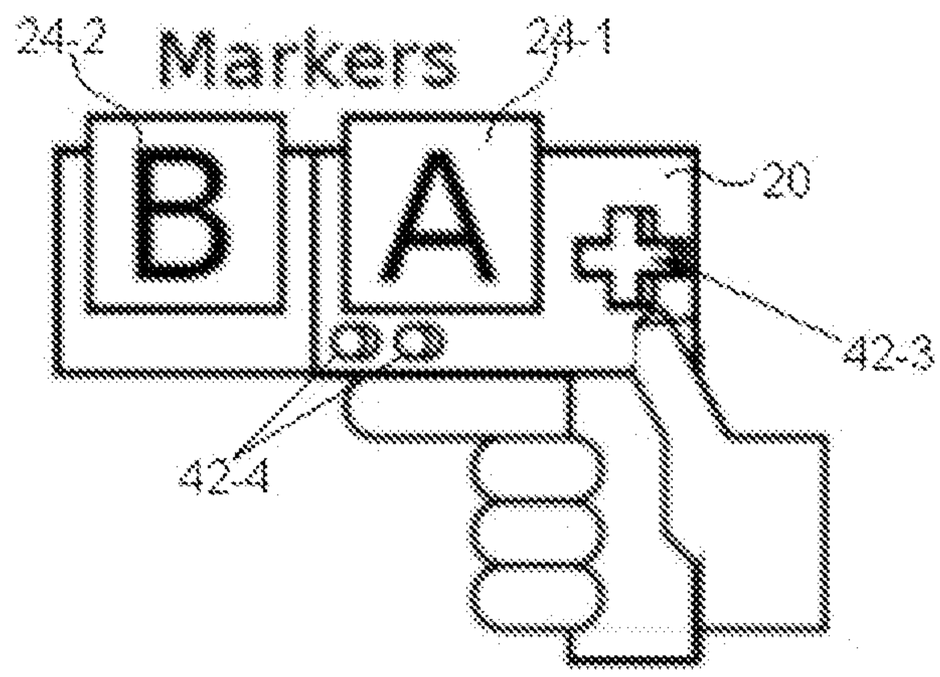

Fig. 45

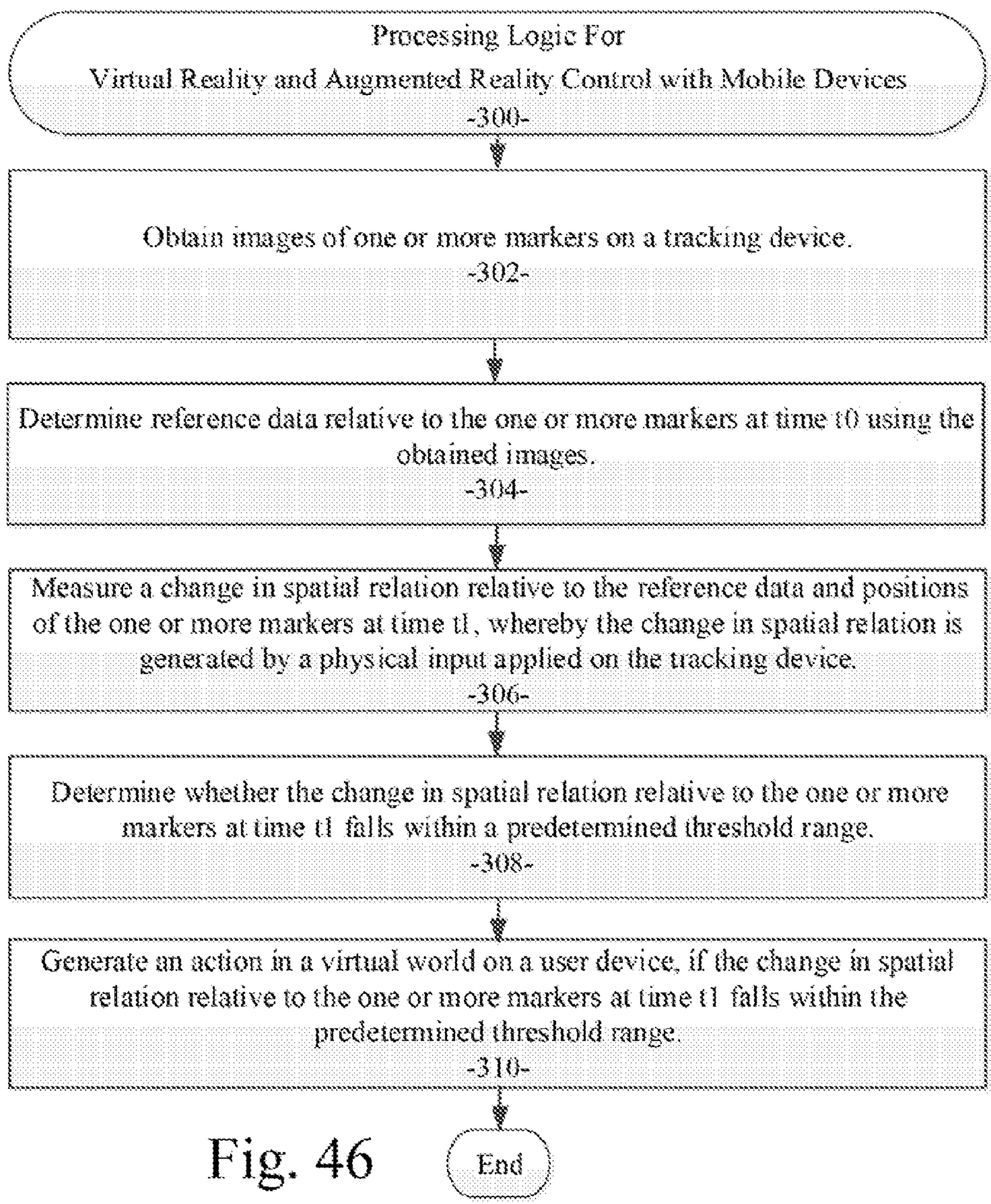
Processing Logic For
Virtual Reality and Augmented Reality Control with Mobile Devices
-300-
Obtain images of one or more markers on a tracking device.
-302-
Determine reference data relative to the one or more markers at time t0 using the obtained images.
-304-
Measure a change in spatial relation relative to the reference data and positions of the one or more markers at time t1, whereby the change in spatial relation is generated by a physical input applied on the tracking device.
-306-
Determine whether the change in spatial relation relative to the one or more markers at time t1 falls within a predetermined threshold range.
-308-
Generate an action in a virtual world on a user device, if the change in spatial relation relative to the one or more markers at time t1 falls within the predetermined threshold range.
-310-
End

Fig. 46

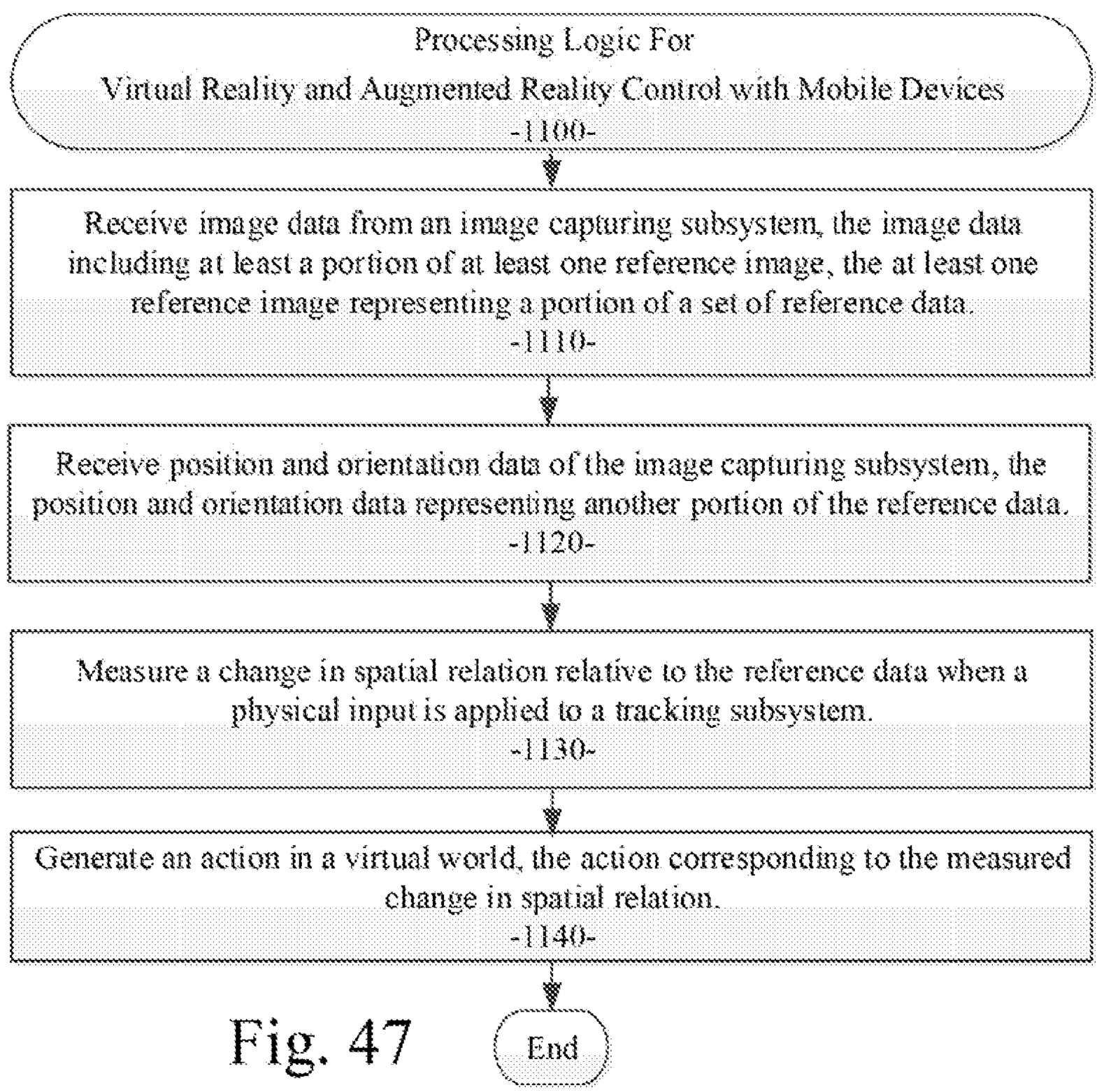
Processing Logic For
Virtual Reality and Augmented Reality Control with Mobile Devices
-1100-
Receive image data from an image capturing subsystem, the image data including at least a portion of at least one reference image, the at least one reference image representing a portion of a set of reference data.
-1110-
Receive position and orientation data of the image capturing subsystem, the position and orientation data representing another portion of the reference data.
-1120-
Measure a change in spatial relation relative to the reference data when a physical input is applied to a tracking subsystem.
-1130-
Generate an action in a virtual world, the action corresponding to the measured change in spatial relation.
-1140-
End

Fig. 47

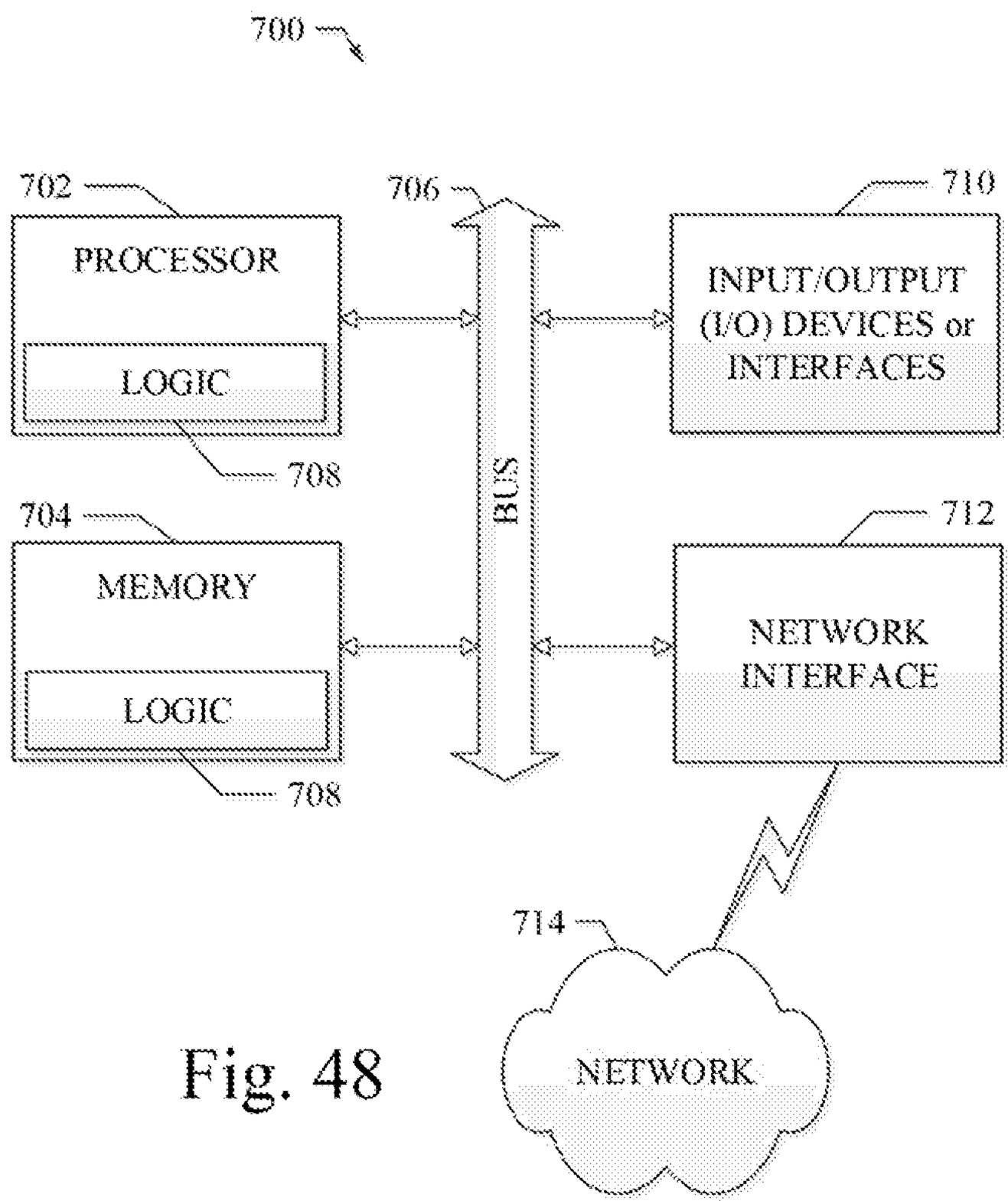
700
702
PROCESSOR
LOGIC
708
704
MEMORY
LOGIC
708
706
BUS
710
INPUT/OUTPUT (I/O) DEVICES or INTERFACES
712
NETWORK INTERFACE
714
NETWORK

Fig. 48

VIRTUAL REALITY AND AUGMENTED REALITY CONTROL WITH MOBILE DEVICES

PRIORITY PATENT APPLICATION

[0001] This is a non-provisional patent application drawing priority from co-pending U.S. provisional patent application Ser. No. 62/114,417; filed Feb. 10, 2015. This present non-provisional patent application draws priority from the referenced provisional patent application. The entire disclosure of the referenced patent application is considered part of the disclosure of the present application and is hereby incorporated by reference herein in its entirety.

BACKGROUND

[0002] 1. Technical Field

[0003] The present disclosure generally relates to virtual reality systems and methods. More specifically, the present disclosure relates to systems and methods for converting a physical input from a user into an action in a virtual reality or augmented reality environment.

[0004] 2. Description of the Related Art

[0005] With the proliferation in consumer electronics, there has been a renewed focus on wearable technology, which encompasses innovations such as wearable computers or devices incorporating either augmented reality (AR) or virtual reality (VR) technologies. Both AR and VR technologies involve computer-generated environments that provide entirely new ways for consumers to experience content. In augmented reality, a computer-generated environment is superimposed over the real world (for example, in Google Glass™). Conversely, in virtual reality, the user is immersed in the computer-generated environment (for example, via a virtual reality headset such as the Oculus Rift™).

[0006] Existing AR and VR devices, however, have several shortcomings. For example, AR devices are usually limited to displaying information, and may not have the capability to detect real-world physical inputs (such as a user's hand gestures or motion). The VR devices, on the other hand, are often bulky and require electrical wires connected to a power source. In particular, the wires can constrain user mobility and negatively impact the user's virtual reality experience.

SUMMARY

[0007] The example embodiments address at least the above deficiencies in existing augmented reality and virtual reality devices. In various example embodiments, a system and method for virtual reality and augmented reality control with mobile devices is disclosed. Specifically, the example embodiments disclose a portable cordless optical input system and method for converting a physical input from a user into an action in an augmented reality or virtual reality environment, where the system can also enable real-life avatar control.

[0008] An example system in accordance with the example embodiments includes a tracking device, a user device, an image capturing device, and a data converter coupled to the user device and the image capturing device. In one particular embodiment, the image capturing device obtains images of a first marker and a second marker on a tracking device. The data converter determines reference positions of the first marker and the second marker at time t**0** using the obtained images, and measures a change in spatial relation of/between the first marker and the second marker at time t**1**, whereby the change is generated by a user input on the tracking device. The time t**1** is a point in time that is later than time t**0**. The data converter also determines whether the change in spatial relation of/between the first marker and the second marker at time t**1** falls within a predetermined threshold range, and generates an action in a virtual world on the user device if the change in spatial relation falls within the predetermined threshold range.

[0009] In some embodiments, the image capturing device may be configured to obtain reference images of a plurality of markers on a tracking device, and track the device based on the obtained images. In other embodiments described herein, we define the reference image or images to be a part or portion of a broader set of reference data that can be used to determine a change in spatial relation. In an example embodiment, the reference data can include: 1) data from the use of a plurality of markers with one or more of the markers being a reference image (e.g., a portion of the reference data); 2) data from the use of one marker with images of the marker sampled at multiple instances of time, one or more of the image samples being a reference image (e.g., another portion of the reference data); 3) position/orientation data of an image capturing device (e.g., another portion of the reference data), the change in spatial relation being relative to the position/orientation data of the image capturing device; and 4) position/orientation data of a tracking device (e.g., another portion of the reference data), the change in spatial relation being relative to the position/orientation data of the tracking device. It will be apparent to those of ordinary skill in the art in view of the disclosure herein that the reference data can include other data components that can be used in determining a change in spatial relation.

[0010] In some embodiments, actions in the virtual world may be generated based on the observable presence of the markers. In those embodiments, the disappearance and/or reappearance of individual markers between times t**0** and t**1** may result in certain actions being generated in the virtual world.

[0011] Embodiments of a method in accordance with the example embodiments include obtaining images of a first marker and a second marker on a tracking device, determining reference positions of the first marker and the second marker at time t**0** using the obtained images, measuring a change in spatial relation of/between the first marker and the second marker at time t**1** whereby the change is generated by a user input on the tracking device, determining whether the change in spatial relation of/between the first marker and the second marker at time t**1** falls within a threshold range, and generating an action in a virtual world on the user device if the change in spatial relation falls within the predetermined threshold range.

[0012] Other aspects and advantages of the example embodiments will become apparent from the following detailed description taken in conjunction with the accompanying drawings which illustrate, by way of example, the principles of the example embodiments.

BRIEF DESCRIPTION OF THE DRAWINGS

[0013] For a better understanding of the example embodiments, reference should be made to the following detailed description taken in conjunction with the accompanying drawings, in which:

[0014] FIG. **1** illustrates a block diagram of an example system consistent with the example embodiments.

[0015] FIGS. **2**, **3**, **4**, **5**, **6**, **7**, **8**, and **9** illustrate a user device in accordance with different embodiments.

[0016] FIGS. **10**, **11**, and **12** depict different perspective views of a tracking device in accordance with an embodiment.

[0017] FIG. **13** illustrates a plan view of an example rig prior to its assembly.

[0018] FIGS. **14** and **15** illustrate example patterns for the first marker and the second marker of FIGS. **10**, **11**, and **12**.

[0019] FIGS. **16**, **17**, and **18** illustrate operation of an example system by a user.

[0020] FIGS. **19** and **20** illustrate example actions generated in a virtual world, the actions corresponding to different physical inputs from the user.

[0021] FIGS. **21**, **22**, **23**, **24**, and **25** illustrate the spatial range of physical inputs available on an example tracking device.

[0022] FIGS. **26** and **27** illustrate an example system in which a single image capturing device is used.

[0023] FIG. **28** illustrates the field-of-view of the image capturing device of FIG. **27**.

[0024] FIG. **29** illustrates the increase in field-of-view when a modifier lens is attached to the image capturing device of FIGS. **27** and **28**.

[0025] FIGS. **30**, **31**, and **32** illustrate example systems in which multiple users are connected in a same virtual world.

[0026] FIGS. **33**, **34**, **35**, **36**, **37**, **38**, and **39** illustrate example actions generated in a virtual world according to different embodiments.

[0027] FIG. **40** illustrates an example system using one marker to track the user's hand in the virtual world.

[0028] FIG. **41** depicts a variety of configurations of markers in various embodiments.

[0029] FIG. **42** illustrates an example embodiment with character navigation implemented with an accelerometer or pedometer.

[0030] FIGS. **43** and **44** depict an embodiment in which the optical markers are attached to a game controller.

[0031] FIG. **45** depicts an embodiment in which the direction control buttons and action buttons are integrated onto a tracking device.

[0032] FIG. **46** is a flow chart illustrating an example method for converting a physical input from a user into an action in a virtual world.

[0033] FIG. **47** is a processing flow chart illustrating an example embodiment of a method as described herein; and

[0034] FIG. **48** shows a diagrammatic representation of a machine in the example form of a mobile computing and/or communication system within which a set of instructions when executed and/or processing logic when activated may cause the machine to perform any one or more of the methodologies described and/or claimed herein.

DETAILED DESCRIPTION

[0035] Reference will now be made in detail to the example embodiments illustrated in the accompanying drawings. Wherever possible, the same reference numbers will be used throughout the drawings to refer to the same or like parts.

[0036] Methods and systems disclosed herein address the above described needs. For example, methods and systems disclosed herein can convert a physical input from a user into an action in a virtual world. The methods and systems can be implemented on low power mobile devices and/or 3D display devices. The methods and systems can also enable real-life avatar control. The virtual world may include a visual environment provided to the user, and may be based on either augmented reality or virtual reality.

[0037] In one embodiment, a cordless portable input system for mobile devices is provided. A user can use the system to: (1) input precise and high resolution position and orientation data; (2) invoke analog actions (e.g., pedaling or grabbing) with realistic one-to-one feedback; (3) use multiple interaction modes to perform a variety of tasks in a virtual world or control a real-life avatar (e.g., a robot); and/or (4) receive tactile feedback based on actions in the virtual world.

[0038] The system is lightweight and low cost, and therefore ideal as a portable virtual reality system. The system can also be used as a recyclable user device in a multi-user environment such as a theater. The system employs a tracking device with multiple image markers as an input mechanism. The markers can be tracked using a camera on the mobile device to obtain position and orientation data for a pointer in a virtual reality world. The system can be used in various fields including the gaming, medical, construction, or military fields.

[0039] FIG. **1** illustrates a block diagram of an example system **100** consistent with the example embodiments. As shown in FIG. **1**, system **100** may include a media source **10**, a user device **12**, an output device **14**, a data converter **16**, an image capturing device **18**, and a tracking device **20**. Each of the components **10**, **12**, **14**, **16**, and **18** is operatively connected to one another via a network or any type of communication links that allow transmission of data from one component to another. The network may include Local Area Networks (LANs), Wide Area Networks (WANs), Bluetooth, and/or Near Field Communication (NFC) technologies, and may be wireless, wired, or a combination thereof. Media source **10** can be any type of storage medium capable of storing imaging data, such as video or still images. The video or still images may be displayed in a virtual world rendered on the output device **14**. For example, media source **10** can be provided as a CD, DVD, Blu-ray disc, hard disk, magnetic tape, flash memory card/drive, solid state drive, volatile or non-volatile memory, holographic data storage, and any other type of storage medium. Media source **10** can also be a computer capable of providing imaging data to user device **12**.

[0040] As another example, media source **10** can be a web server, an enterprise server, or any other type of computer server. Media source **10** can be computer programmed to accept requests (e.g., HTTP, or other protocols that can initiate data transmission) from user device **12** and to serve user device **12** with requested imaging data. In addition, media source **10** can be a broadcasting facility, such as free-to-air, cable, satellite, and other broadcasting facility, for distributing imaging data. The media source **10** may also be a server in a data network (e.g., a cloud computing network).

[0041] User device **12** can be, for example, a virtual reality headset, a head mounted device (HMD), a cell phone or smartphone, a personal digital assistant (PDA), a computer, a laptop, a tablet PC, a media content player, a video game station/system, or any electronic device capable of providing or rendering imaging data. User device **12** may include software applications that allow user device **12** to communicate with and receive imaging data from a network or local storage

medium. As mentioned above, user device **12** can receive data from media source **10**, examples of which are provided above.

[0042] As another example, user device **12** can be a web server, an enterprise server, or any other type of computer server. User device **12** can be a computer programmed to accept requests (e.g., HTTP, or other protocols that can initiate data transmission) for converting a physical input from a user into an action in a virtual world, and to provide the action in the virtual world generated by data converter **16**. In some embodiments, user device **12** can be a broadcasting facility, such as free-to-air, cable, satellite, and other broadcasting facility, for distributing imaging data, including imaging data in a 3D format in a virtual world.

[0043] In the example of FIG. **1**, data converter **16** can be implemented as a software program executed by a processor and/or as hardware that converts analog data to an action in a virtual world based on physical input from a user. The action in the virtual world can be depicted in one of video frames or still images in a 2D or 3D format, can be real-life and/or animated, can be in color, black/white, or grayscale, and can be in any color space.

[0044] Output device **14** can be a display device such as, for example, a display panel, monitor, television, projector, or any other display device. In some embodiments, output device **14** can be, for example, a cell phone or smartphone, personal digital assistant (PDA), computer, laptop, desktop, a tablet PC, media content player, set-top box, television set including a broadcast tuner, video game station/system, or any electronic device capable of accessing a data network and/or receiving imaging data.

[0045] Image capturing device **18** can be, for example, a physical imaging device such as a camera. In one embodiment, the image capturing device **18** may be a camera on a mobile device. Image capturing device **18** can be configured to capture imaging data relating to tracking device **20**. The imaging data may correspond to, for example, still images or video frames of marker patterns on tracking device **20**. Image capturing device **18** can provide the captured imaging data to data converter **16** for data processing/conversion, so as to generate an action in a virtual world on user device **12**.

[0046] In some embodiments, image capturing device **18** may extend beyond a physical imaging device. For example, image capturing device **18** may include any technique that is capable of capturing and/or generating images of marker patterns on tracking device **20**. In some embodiments, image capturing device **18** may refer to an algorithm that is capable of processing images obtained from another physical device.

[0047] While shown in FIG. **1** as separate components that are operatively connected, any or all of media source **10**, user device **12**, output device **14**, data converter **16**, and image capturing device **18** may be co-located in one device. For example, media source **10** can be located within or form part of user device **12** or output device **14**, output device **14** can be located within or form part of user device **12**, data converter **16** can be located within or form part of media source **10**, user device **12**, output device **14**, or image capturing device, and image capturing device **18** can be located within or form part of user device **12** or output device **14**. It is understood that the configuration shown in FIG. **1** is for illustrative purposes only. Certain components or devices may be removed or combined and other components or devices may be added.

[0048] In the embodiment of FIG. **1**, tracking device **20** may be any physical object or structure that can be optically tracked in real-time by image capturing device **18**. The tracking device **20** may include, for example, unique marker patterns that can be easily detected in an image captured by image capturing device **18**. By using easily detectable marker patterns, complex and computationally expensive image processing can be avoided. Optical tracking has several advantages. For example, optical tracking allows for wireless 'sensors', is less susceptible to noise, and allows for many objects (e.g., various marker patterns) to be tracked simultaneously.

[0049] The interaction between image capturing device **18** and tracking device **20** is through a visual path (denoted by the dotted line in FIG. **1**). It is noted that tracking device **20** is not operatively connected to any of the other components in FIG. **1**. Instead, tracking device **20** is a stand-alone physical object or structure that is operable by a user. For example, tracking device **20** may be held by or attached to a user's hand/arm in a manner that allows the tracking device **20** to be optically tracked by image capturing device **18**. In some embodiments, the tracking device **20** may be configured to provide tactile feedback to the user, whereby the tactile feedback is based on an analog input received from the user. The analog input may correspond to, for example, a translation or rotation of optical markers on the tracking device **20**. Any type, range, and magnitude of motion is contemplated.

[0050] Next, the user device **20** in accordance with an embodiment will be described with reference to FIGS. **2**, **3**, **4**, **5**, and **6**. Referring to FIG. **2**, the user device **12** is provided in the form of a virtual reality head mounted device (HMD). FIG. **2** illustrates a user wearing the user device **12** and operating the tracking device **20** in one hand. FIG. **3** illustrates different perspective views of the user device **12** in an assembled state. The user device **12** includes a HMD cover **12-1**, a lens assembly **12-2**, the output device **14** (not shown), and the image capturing device **18**. As previously mentioned, the user device **12**, output device **14**, and image capturing device **18** may be co-located in one device (for the example, the virtual HMD of FIGS. **2** and **3**). The components in the user device **12** of FIG. **3** will be described in more detail with reference to FIGS. **4**, **5**, and **6**. Specifically, FIGS. **4** and **5** illustrate the user device **12** in a pre-assembled state, and FIG. **6** illustrates the operation of the user device **12** by a user. In the embodiment of FIGS. **2** through **6**, the image capturing device **18** is located on the output device **14**.

[0051] Referring to FIGS. **4**, **5**, and **6**, the HMD cover **12-1** includes a head strap **12-1**S for mounting the user device **12** to the user's head, a site **12-1**A for attaching the lens assembly **12-2**, a hole **12-1**C for exposing the lenses of the image capturing device **18**, a left eye hole **12-1**L for the user's left eye, a right eye hole **12-1**R for the user's right eye, and a hole **12-1**N to seat the user's nose. The HMD cover **12-1** may be made of various materials such as foam rubber, Neoprene™, cloth, etc. The foam rubber may include, for example, a foam sheet made of Ethylene Vinyl Acetate (EVA).

[0052] The lens assembly **12-2** is configured to hold the output device **14**. An image displayed on the output device **14** may be partitioned into a left eye image **14**L and a right eye image **14**R. The image displayed on the output device **14** may be an image of a virtual reality or an augmented reality world. The lens assembly **12-2** includes a left eye lens **12-2**L for focusing the left eye image **14**L for the user's left eye, a right eye lens **12-2**R for focusing the right eye image **14**R for the user's right eye, and a hole **12-2**N to seat the user's nose. The left and right eye lenses **12-2**L and **12-2**R may include any type of optical focusing lenses, for example, convex or concave lenses. When the user looks through the left and right eye

holes **12-1**L and **12-1**R, the user's left eye will see the left eye image **14**L (as focused by the left eye lens **12-2**L), and the user's right eye will see the right eye image **14**R (as focused by the right eye lens **12-2**R).

[0053] In some embodiments, the user device **12** may further include a toggle button (not shown) for controlling images generated on the output device **14**. As previously mentioned, the media source **10** and data converter **16** may be located either within, or remote from, the user device **12**.

[0054] To assemble the user device **12**, the output device **14** (including the image capturing device **18**) and the lens assembly **12-2** are first placed on the HMD cover **12-1** in their designated locations. The HMD cover **12-1** is then folded in the manner as shown on the right of FIG. **4**. Specifically, the HMD cover **12-1** is folded so that the left and right eye holes **12-1**L and **12-1**R align with the respective left and right eye lenses **12-2**L and **12-2**R, the hole **12-1**N aligns with the hole **12-2**N, and the hole **12-1**C exposes the lenses of the image capturing device **18**. One head strap **12-1**S can also be attached to the other head strap **12-1**S (using, for example, Velcro™, buttons, binders, etc.) so as to mount the user device **12** onto the user's head.

[0055] In some embodiments, the lens assembly **12-2** may be provided as a foldable lens assembly, for example as shown in FIG. **5**. In those embodiments, when the user device **12** is not in use, a user can detach the lens assembly **12-2** from the HMD cover **12-1**, and further remove the output device **14** from the lens assembly **12-2**. Subsequently, the user can lift up flap **12-2**F and fold the lens assembly **12-2** into a flattened two-dimensional shape for easy storage. Likewise, the HMD cover **12-1** can also be folded into a flattened two-dimensional shape for easy storage. Accordingly, the HMD cover **12-1** and the lens assembly **12-2** can be made relatively compact to fit into a pocket, purse or any kind of personal bag, together with the output device **14** and image capturing device **18** (which may be provided in a smartphone). As such, the user device **12** is highly portable and can be carried around easily. In addition, by making the HMD cover **12-1** detachable, users can swap and use a variety of HMD covers **12-1** having different customized design patterns (similar to the swapping of different protective covers for mobile phones). Furthermore, since the HMD cover **12-1** is detachable, it can be cleaned easily or recycled after use.

[0056] In some embodiments, the user device **12** may include a feedback generator **12-1**F that couples the user device **12** to the tracking device **20**. Specifically, the feedback generator **12-1**F may be used in conjunction with different tactile feedback mechanisms to provide tactile feedback to a user as the user operates the user device **12** and tracking device **20**.

[0057] It is further noted that the HMD cover **12-1** can be provided with different numbers of head straps **12-1**S. In some embodiments, the HMD cover **12-1** may include two head straps **12-1**S (see, e.g., FIG. **7**). In other embodiments, the HMD cover **12-1** may include three head straps **12-1**S (see, e.g., FIG. **8**) so as to more securely mount the user device **12** to the user's head. Any number of head straps is contemplated. In some alternative embodiments, the HMD cover **12-1** need not have a head strap, if the virtual reality HMD already comes with a mounting mechanism (see, e.g., FIG. **9**). In an example embodiment to ensure users can experience VR with their full body, a head mounting rig can be fabricated out of a sheet of elastic material to mount the VR viewer on user's head with comfort.

[0058] FIGS. **10**, **11**, and **12** depict different perspective views of a tracking device in accordance with an embodiment. Referring to FIG. **10**, a tracking device **20** includes a rig **22** and optical markers **24**. The tracking device **20** is designed to hold multiple optical markers **24** and to change their spatial relationship when a user provides a physical input to the tracking device **20** (e.g., through pushing, pulling, bending, rotating, etc.). The rig **22** includes a handle **22-1**, a trigger **22-2**, and a marker holder **22-3**. The handle **22-1** may be ergonomically designed to fit a user's hand so that the user can hold the rig **22** comfortably. The trigger **22-2** is placed at a location so that the user can slide a finger (e.g., index finger) into the hole of the trigger **22-2** when holding the handle **22-1**. The marker holder **22-3** serves as a base for holding the optical markers **24**. In one embodiment, the rig **22** and the optical markers **24** are formed separately, and subsequently assembled together by attaching the optical markers **24** to the marker holder **22-3**. The optical markers **24** may be attached to the marker holder **22-3** using any means for attachment, such as Velcro™, glue, adhesive tape, staples, screws, bolts, plastic snapfits, dovetail mechanisms, etc.

[0059] The optical markers **24** include a first marker **24-1** comprising an optical pattern "A" and a second marker **24-2** comprising an optical pattern "B". Optical patterns "A" and "B" may be unique patterns that can be easily imaged and tracked by image capturing device **18**. Specifically, when a user is holding the tracking device **20**, the image capturing device **18** can track at least one of the optical markers **24** to obtain a position and orientation of the user's hand in the real world. In addition, the spatial relationship between the optical markers **24** provides an analog value that can be mapped to different actions in the virtual world.

[0060] Although two optical markers **24** have been illustrated in the example of FIGS. **10**, **11**, and **12**, it should be noted that the example embodiments are not only limited to only two optical markers. For example, in other embodiments, the tracking device **20** may include three or more optical markers **24**. In an alternative embodiment, the tracking device **20** may consist of only one optical marker **24**.

[0061] Referring to FIG. **12**, the tracking device **20** further includes an actuation mechanism **22-4** for manipulating the optical markers **24**. Specifically, the actuation mechanism **22-4** can move the optical markers **24** relative to each other so as to change the spatial relation between the optical markers **24** (e.g., through translation, rotation, etc.), as described in further detail in the specification.

[0062] In the example of FIG. **12**, the actuation mechanism **22-4** is provided in the form of a rubber band attached to various points on the rig **22**. When a user presses the trigger **22-2** with his finger, the actuation mechanism **22-4** moves the second marker **24-2** to a new position relative to the first marker **24-1**. When the user releases the trigger **22-2**, the second marker **24-2** moves back to its original position due to the elasticity of the rubber band. In particular, rubber bands providing a range of elasticity can be used, so as to provide adequate tension (hence, tactile feedback to the user) under a variety of conditions when the user presses and releases the trigger **22-2**. Different embodiments for providing tactile feedback will be described in more detail later in the specification with reference to FIGS. **43**, **44**, **45**, and **17**D.

[0063] Although a rubber band actuation mechanism has been described above, it should be noted that the actuation mechanism **22-4** is not limited to a rubber band. The actuation mechanism **22-4** may include any mechanism capable of

moving the optical markers **24** relative to each other on the rig **22**. In some embodiments, the actuation mechanism **22-4** may be, for example, a spring-loaded mechanism, an air-piston mechanism (driven by air pressure), a battery-operated motorized device, etc.

[0064] FIG. **13** illustrates a two-dimensional view of an example rig prior to its assembly. In the example of FIGS. **10**, **11**, and **12**, the rig **22** may be made of cardboard. First, a two-dimensional layout of the rig **22** (shown in FIG. **13**) is formed on a sheet of cardboard, and then folded along its dotted lines to form the three-dimensional rig **22**. The actuation mechanism **22-4** (rubber band) is then attached to the areas denoted "rubber band." To improve durability and to withstand heavy use, the rig **22** may be made of stronger materials such as wood, plastic, metal, etc.

[0065] FIGS. **14** and **15** illustrate example patterns for the optical markers. Specifically, FIG. **14** illustrates an optical pattern "A" for the first marker **24-1**, and FIG. **15** illustrates an optical pattern "B" for the second marker **24-2**. As previously mentioned, optical patterns "A" and "B" are unique patterns that can be readily imaged and tracked by image capturing device **18**. The optical patterns "A" and "B" may be black-and-white patterns or color patterns. To form the optical markers **24**, the optical patterns "A" and "B" can be printed on a white paper card using, for example, an inkjet or laser printer, and attached to the marker holder **22-3**. In those embodiments in which the optical patterns "A" and "B" are color patterns, the color patterns may be formed by printing, on the white paper card, materials that reflect/emit different wavelengths of light, and the image capturing device **18** may be configured to detect the different wavelengths of light. The optical markers **24** in FIGS. **14** and **15** have been found to generally work well in illuminated environments. However, the optical markers **24** can be modified for low-light and dark environments by using other materials such as glow-in-the-dark materials (e.g., diphenyl oxalate—Cyalume™), light-emitting diodes (LEDs), thermally sensitive materials (detectable by infrared cameras), etc. Accordingly, the optical markers **24** can be used to detect light that is in the invisible range (for example, infrared and/or ultraviolet), through the use of special materials and techniques (for example, thermal imaging).

[0066] It should be noted that the optical markers **24** are not merely limited to two-dimensional cards. In some other embodiments, the optical markers **24** may be three-dimensional objects. Generally, the optical markers **24** may include any object having one or more recognizable structures or patterns. Also, any shape or size of the optical markers **24** is contemplated.

[0067] In the embodiments of FIGS. **14** and **15**, the optical markers **24** passively reflect light. However, the example embodiments are not limited thereto. In some other embodiments, the optical markers **24** may also actively emit light, for example, by using a light emitting diode (LED) panel for the optical markers **24**.

[0068] In some embodiments, when the tracking device **20** is not in use, the user can detach the optical markers **24** from the marker holder **22-3** and fold the rig **22** back into a flattened two-dimensional shape for easy storage. The folded rig **22** and optical markers **24** can be made relatively compact to fit into a pocket, purse or any kind of personal bag. As such, the tracking device **20** is highly portable and can be carried around easily with the user device **12**. In some embodiments, the tracking device **20** and the user device **12** can be folded together to maximize portability.

[0069] FIGS. **16**, **17**, and **18** illustrate operation of an example system by a user. Referring to FIG. **16**, the user device **12** is provided in the form of a virtual reality head mounted device (HMD), with the output device **14** and image capturing device **18** incorporated into the user device **12**. The user device **12** may correspond to the embodiment depicted in FIGS. **2** and **3**. As previously mentioned, the media source **10** and data converter **16** may be located either within, or remote from, the user device **12**. As shown in FIG. **16**, the tracking device **20** may be held in the user's hand. During operation of the system, the user's mobility is not restricted because the tracking device **20** need not be physically connected by wires to the user device **12**. As such, the user is free to move the tracking device **20** around independently of the user device **12**.

[0070] Referring to FIG. **17**, the user's finger is released from the trigger **22-2**, and the first marker **24-1** and second marker **24-2** are disposed at an initial position relative to each other. The initial position corresponds to the reference positions of the optical markers **24**. The initial position also provides an approximate position of the user's hand in world space. When the optical markers **24** lie within the field-of-view of the image capturing device **18**, a first set of images of the optical markers **24** is captured by the image capturing device **18**. The reference positions of the optical markers **24** can be determined by the data converter **16** using the first set of images. In one embodiment, the position of the user's hand in real world space can be obtained by tracking the first marker **24-1**.

[0071] Referring to FIG. **18**, the user provides a physical input to the tracking device **20** by pressing his finger onto the trigger **22-2**, which causes the actuation mechanism **22-4** to move the second marker **24-2** to a new position relative to the first marker **24-1**. In some embodiments, the actuation mechanism **22-4** can move both the first marker **24-1** and the second marker **24-2** simultaneously relative to each other. Accordingly, in those embodiments, a larger change in spatial relation between the first marker **24-1** and the second marker **24-2** may be obtained. Any type, range, and magnitude of motion is contemplated.

[0072] A second set of images of the optical markers **24** is then captured by the image capturing device **18**. The new positions of the optical markers **24** are determined by the data converter **16** using the second set of captured images. Subsequently, the change in spatial relation between the first marker **24-1** and second marker **24-2** due to the physical input from the user is calculated by the data converter **16**, using the difference between the new and reference positions of the optical markers **24** and/or the difference between the two new positions of the optical markers **24**. The data converter **16** then converts the change in spatial relation between the optical markers **24** into an action in a virtual world rendered on the user device **12**. The action may include, for example, a trigger action, grabbing action, toggle action, etc. In some embodiments, the action in the virtual world may be generated based on the observable presence of the markers. In those embodiments, the disappearance and/or reappearance of individual markers between times t**0** and t**1** may result in certain actions being generated in the virtual world, whereby time t**1** is a point in time occurring after time t**0**. For example, in one specific embodiment, there may be four markers comprising a first marker, a second marker, a third marker, and a fourth

marker. A user may generate a first action in the virtual world by obscuring the first marker, a second action in the virtual world by obscuring the second marker, and so forth. The markers may be obscured from view using various methods. For example, the markers may be obscured by blocking the markers using a card made of an opaque material, or by moving the markers out of the field-of-view of the image capturing device. Since the aforementioned embodiments are based on the observable presence of the markers (i.e., present or not-present), the embodiments are therefore well-suited for binary input so as to generate, for example, a toggle action or a switching action.

[0073] It should be noted that the change in spatial relation of/between the markers includes the spatial change for each marker, as well as the spatial difference between two or more markers. Any type of change in spatial relation is contemplated. For example, in various embodiments described herein, we define the reference image or images to be a part or portion of a broader set of reference data that can be used to determine a change in spatial relation. In an example embodiment, the reference data can include: 1) data from the use of a plurality of markers with one or more of the markers being a reference image (e.g., a portion of the reference data); 2) data from the use of one marker with images of the marker sampled at multiple instances of time, one or more of the image samples being a reference image (e.g., another portion of the reference data); 3) position/orientation data of an image capturing device (e.g., another portion of the reference data), the change in spatial relation being relative to the position/orientation data of the image capturing device; and 4) position/orientation data of a tracking device (e.g., another portion of the reference data), the change in spatial relation being relative to the position/orientation data of the tracking device. It will be apparent to those of ordinary skill in the art in view of the disclosure herein that the reference data can include other data components that can be used in determining a change in spatial relation.

[0074] FIGS. **19** and **20** illustrate the visual output in a virtual world on the user device corresponding to the reference and new positions of the optical markers. In FIGS. **19** and **20**, a virtual world **25** is displayed on the output device **14** of the user device **12**. A virtual object **26** (in the shape of a virtual hand) is provided in the virtual world **25**. Referring to FIG. **19**, when the optical markers **24** are at their reference positions (whereby the second marker **24-2** is adjacent to the first marker **24-1** without any gap in-between the markers), the virtual object **26** is in an "open" position **26-1**. Referring to FIG. **20**, when the optical markers **24** are at their new positions (whereby the second marker **24-2** is rotated by an angle θ relative to the first marker **24-1**), the change in spatial relation between the first marker **24-1** and the second marker **24-2** is converted by the data converter **16** into an action in the virtual world **25**. To visually indicate that the action has occurred, the virtual object **26** changes from the "open" position **26-1** to a "closed" position **26-2**. In the example of FIG. **20**, the "closed" position **26-2** corresponds to a grab action, in which the virtual hand is in a shape of a clenched fist. In some other embodiments, the "closed" position **26-2** may correspond to a trigger action, a toggle action, or any other action or motion in the virtual world **25**.

[0075] FIGS. **21**, **22**, **23**, and **24** illustrate the spatial range of physical inputs available on an example tracking device.

[0076] Referring to FIG. **21**, the optical markers **24** are in their reference positions. The reference positions may correspond to the default positions of the optical markers **24** (i.e., the positions of the optical markers **24** when no physical input is received from a user). When the optical markers **24** are in their reference positions, the trigger **22-2** and actuation mechanism **22-4** are not activated. As previously described with reference to FIG. **19**, the object **26** in the virtual world **25** may be in the "open" position **26-1** when the optical markers **24** are in their reference positions (i.e., no action is performed by or on the object **26**). As shown in FIG. **21**, the second marker **24-2** is adjacent to the first marker **24-1** without any gap in-between when the optical markers **24** are in their reference positions.

[0077] Referring to FIG. **22**, a user may apply one type of physical input to the tracking device **20**. Specifically, the user can press his finger onto the trigger **22-2**, which causes the actuation mechanism **22-4** to rotate the second marker **24-2** about a point O relative to the first marker **24-1** (see, for example, FIGS. **18** and **20**). The angle of rotation between the first marker **24-1** and the second marker **24-2** is given by θ. In some embodiments, the user can vary the angular rotation by either applying different pressures to the trigger **22-2**, holding the trigger **22-2** at a constant pressure for different lengths of time, or a combination of the above. For example, the user may increase the angular rotation by applying a greater pressure to the trigger **22-2**, or decrease the angular rotation by reducing the pressure applied to the trigger **22-2**. Likewise, the user may increase the angular rotation by holding the trigger **22-2** for a longer period of time at a constant pressure, or reduce the angular rotation by decreasing the pressure applied to the trigger **22-2**. To improve user experience, tactile feedback from the tracking device **20** to the user can be modified, for example, by adjusting a physical resistance (such as spring tension) in the actuation mechanism **22-4**/trigger **22-2**.

[0078] The angular rotation of the optical markers **24** corresponds to one type of analog physical input from the user. Depending on the angle of rotation, different actions can be specified in the virtual world **25**. For example, referring to FIG. **22**, when the user applies a first physical input such that the angle of rotation θ falls within a first predetermined angular threshold range θ**1**, the data converter **16** converts the first physical input into a first action R**1** in the virtual world **25**. Similarly, when the user applies a second physical input such that the angle of rotation θ falls within a second predetermined angular threshold range θ**2**, the data converter **16** converts the second physical input into a second action R**2** in the virtual world **25**. Likewise, when the user applies a third physical input such that the angle of rotation θ falls within a third predetermined angular threshold range θ**3**, the data converter **16** converts the third physical input into a third action R**3** in the virtual world **25**. The first predetermined angular threshold range θ**1** is defined by the angle between an edge of the first marker **24-1** and an imaginary line L**1** extending outwardly from point O. The second predetermined angular threshold range θ**2** is defined by the angle between the imaginary line L**1** and another imaginary line L**2** extending outwardly from point O. The third predetermined angular threshold range θ**3** is defined by the angle between the imaginary line L**2** and an edge of the second marker **24-2**. Any magnitude of each range is contemplated.

[0079] It is noted that the number of predetermined angular threshold ranges need not be limited to three. In some embodiments, the number of predetermined angular threshold ranges can be more than three (or less than three), depend-

ing on the sensitivity and resolution of the image capturing device **18** and other requirements (for example, gaming functions, etc.).

[0080] It is further noted that the physical input to the tracking device **20** need not be limited to an angular rotation of the optical markers **24**. In some embodiments, the physical input to the tracking device **20** may correspond to a translation motion of the optical markers **24**. For example, referring to FIG. **23**, a user can press his finger onto the trigger **22-2**, which causes the actuation mechanism **22-4** to translate the second marker **24-2** by a distance from the first marker **24-1**. The actuation mechanism **22-4** in FIG. **23** is different from that in FIG. **22**. Specifically, the actuation mechanism **22-4** in FIG. **22** rotates the optical markers **24**, whereas the actuation mechanism **22-4** in FIG. **23** translates the optical markers **24**. Referring to FIG. **23**, the translation distance between the nearest adjacent edges of the first marker **24-1** and the second marker **24-2** is given by D. In some embodiments, the user can vary the translation distance by either applying different pressures to the trigger **22-2**, holding the trigger **22-2** at a constant pressure for different lengths of time, or a combination of the above. For example, the user may increase the translation distance by applying a greater pressure to the trigger **22-2**, or decrease the translation distance by reducing the pressure applied to the trigger **22-2**. Likewise, the user may increase the translation distance by holding the trigger **22-2** for a longer period of time at a constant pressure, or reduce the translation distance by decreasing the pressure applied to the trigger **22-2**. As previously mentioned, tactile feedback from the tracking device **20** to the user can be modified to improve user experience, for example, by adjusting a physical resistance (such as spring tension) in the actuation mechanism **22-4**/trigger **22-2**.

[0081] The translation of the optical markers **24** corresponds to another type of analog physical input from the user. Depending on the translation distance, different actions can be specified in the virtual world **25**. For example, referring to FIG. **23**, when the user applies a fourth physical input such that the translation distance D falls within a first predetermined distance range D**1**, the data converter **16** converts the fourth physical input into a fourth action T**1** in the virtual world **25**. Similarly, when the user applies a fifth physical input such that the translation distance D falls within a second predetermined distance range D**2**, the data converter **16** converts the fifth physical input into a fifth action T**2** in the virtual world **25**. Likewise, when the user applies a sixth physical input such that the translation distance D falls within a third predetermined distance range D**3**, the data converter **16** converts the sixth physical input into a sixth action T**3** in the virtual world **25**. The first predetermined distance range D**1** is defined by a shortest distance between an edge of the first marker **24-1** and an imaginary line L**3** extending parallel to the edge of the first marker **24-1**. The second predetermined distance range D**2** is defined by a shortest distance between the imaginary line L**3** and another imaginary line L**4** extending parallel to the imaginary line L**3**. The third predetermined distance range D**3** is defined by a shortest distance between the imaginary line L**4** and an edge of the second marker **24-2** parallel to the imaginary line L**4**. Any magnitude of each distance range is contemplated.

[0082] It is noted that the number of predetermined distance ranges need not be limited to three. In some embodiments, the number of predetermined distance ranges can be more than three (or less than three), depending on the sensitivity and resolution of the image capturing device **18** and other requirements (for example, gaming functions, etc.).

[0083] The actions in the virtual world **25** may include discrete actions such as trigger, grab, toggle, etc. However, since the change in spatial relation (rotation/translation) between the optical markers **24** is continuous, the change may be mapped to an analog action in the virtual world **25**, for example, in the form of a gradual grabbing action or a continuous pedaling action. The example embodiments are not limited to actions performed by or on the virtual object **26**. For example, in other embodiments, an event (that is not associated with the virtual object **26**) may be triggered in the virtual world **25** when the change in spatial relation exceeds a predetermined threshold value or falls within a predetermined threshold range.

[0084] Although FIGS. **22** and **23** respectively illustrate rotation and translation of the optical markers **24** in two dimensions, it is noted that the movement of each of the optical markers **24** can be extrapolated to three dimensions having six degrees of freedom. The optical markers **24** can be configured to rotate or translate in any one or more of the three axes X, Y, and Z in a Cartesian coordinate system. For example, as shown in FIG. **24**, the first marker **24-1** having the pattern "A" can translate in the X-axis (Tx), Y-axis (Ty), or Z-axis (Tz). Likewise, the first marker **24-1** can also rotate about any one or more of the X-axis (Rx), Y-axis (Ry), or Z-axis (Rz). FIG. **25** illustrates examples of tracker configurations for different numbers of optical markers **24**. Any number and configuration of the optical markers **24** is contemplated. For example, in one embodiment, the tracking device **20** may consist of a first optical marker **24-1** having a pattern "A", whereby the optical marker **24-1** is free to move in six degrees of freedom. In another embodiment, the tracking device **20** may consist of a first optical marker **24-1** having a pattern "A" and a second optical marker **24-2** having a pattern "B", whereby each of the optical markers **24-1** and **24-2** is free to move in six degrees of freedom. In a further embodiment, the tracking device **20** may consist of a first optical marker **24-1** having a pattern "A", a second optical marker **24-2** having a pattern "B", and a third optical marker **24-3** having a pattern "C", whereby each of the optical markers **24-1**, **24-2**, and **24-3** is free to move in six degrees of freedom.

[0085] FIG. **26** illustrates an example system in which a single image capturing device **18** is used to detect changes in the spatial relation between the optical markers **24**. As shown in FIG. **26**, the data converter **16** is connected between the image capturing device **16** and the user device **12**. The data converter **16** may be configured to control the image capturing device **18**, receive imaging data from the image capturing device **18**, process the imaging data to determine reference positions of the optical markers **24**, measure a change in spatial relation between the optical markers **24** when a user provides a physical input to the tracking device **20**, determine whether the change in spatial relation falls within a predetermined threshold range, and generate an action in the virtual world **25** on the user device **12**, if the change in spatial relation falls within the predetermined threshold range.

[0086] As mentioned above, the system in FIG. **26** has a single image capturing device **18**. The detectable distance/angular range for each degree-of-freedom in the system of FIG. **26** is illustrated in FIG. **27**, and is limited by the field-of-view of the image capturing device **18**. For example, in one embodiment, the detectable translation distance between the

optical markers **24** may be up to 1 ft. in the X-direction, 1 ft. in the Y-direction, and 5 ft. in the Z-direction; and the detectable angular rotation of the optical markers **24** may be up to 180° about the X-axis, 180° about the Y-axis, and 360° about the Z-axis.

[0087] In some embodiments, the system may include a fail-safe mechanism that allows the system to use the last known position of the tracking device **20** if the tracking device moves out of the detectable distance/angular range in a degree-of-freedom. For example, if the image capturing device **18** loses track of the optical markers **24**, or if the tracking data indicates excessive movement (which may be indicative of a tracking error), the system uses the last known tracking value instead.

[0088] FIG. **28** illustrates the field-of-view of the image capturing device **18** of FIG. **27**. In some embodiments, a modifier lens **18-1** may be attached to the image capturing device **18** to increase its field-of-view, as illustrated in FIG. **29**. For example, comparing the embodiments in FIGS. **28** and **29**, the detectable translation distance between the optical markers **24** may be increased from 1 ft. to 3 ft. in the X-direction, and 1 ft. to 3 ft. in the Y-direction, after the modifier lens **18-1** has been attached to the image capturing device **18**.

[0089] In some embodiments, to further increase the detectable distance/angular range for each degree-of-freedom, multiple image capturing devices **18** can be placed at different locations and orientations to capture a wider range of the degrees of freedom of the optical markers **24**.

[0090] In some embodiments, a plurality of users may be immersed in a multi-user virtual world **25**, for example, in a massively multiplayer online role-playing game. FIG. **30** illustrates a multi-user system **200** that allows users to interact with one another in the virtual world **25**. Referring to FIG. **30**, the multi-user system **200** includes a central server **202** and a plurality of systems **100**.

[0091] The central server **202** can include a web server, an enterprise server, or any other type of computer server, and can be computer programmed to accept requests (e.g., HTTP, or other protocols that can initiate data transmission) from each system **100** and to serve each system **100** with requested data. In addition, the central server **202** can be a broadcasting facility, such as free-to-air, cable, satellite, and other broadcasting facility, for distributing data.

[0092] Each system **100** in FIG. **30** may correspond to the system **100** depicted in FIG. **1**. Each system **100** may have a participant. A "participant" may be a human being. In some particular embodiments, the "participant" may be a non-living entity such as a robot, etc. The participants are immersed in the same virtual world **25**, and can interact with one another in the virtual world **25** using virtual objects and/or actions. The systems **100** may be co-located, for example in a room or a theater. When the systems **100** are co-located, multiple image capturing devices (e.g., N number of image capturing devices, whereby N is greater than or equal to 2) may be installed in that location to improve optical coverage of the participants and to eliminate blind spots. However, it is noted that the systems **100** need not be in the same location. For example, in some other embodiments, the systems **100** may be at remote geographical locations (e.g., in different cities around the world).

[0093] The multi-user system **200** may include a plurality of nodes. Specifically, each system **100** corresponds to a "node." A "node" is a logically independent entity in the system **200**. If a "system **100**" is followed by a number or a letter, it means that the "system **100**" corresponds to a node sharing the same number or letter. For example, as shown in FIG. **30**, system **100-1** corresponds to node **1** which is associated with participant **1**, and system **100-*k*** corresponds to node k which is associated with participant k. Each participant may have unique patterns on their optical markers **24** so as to distinguish their identities.

[0094] Referring to FIG. **30**, the bi-directional arrows between the central server **202** and the data converter **16** in each system **100** indicate two-way data transfer capability between the central server **202** and each system **100**. The systems **100** can communicate with one another via the central server **202**. For example, imaging data, as well as processed data and instructions pertaining to the virtual world **25**, may be transmitted to/from the systems **100** and the central server **202**, and among the systems **100**.

[0095] The central server **202** collects data from each system **100**, and generates an appropriate custom view of the virtual world **25** to present at the output device **14** of each system **100**. It is noted that the views of the virtual world **25** may be customized independently for each participant.

[0096] FIG. **31** is a multi-user system **202** according to another embodiment, and illustrates that the data converters **16** need not reside within the systems **100** at each node. As shown in FIG. **31**, the data converter **16** can be integrated into the central server **202**, and therefore remote to the systems **100**. In the embodiment of FIG. **31**, the image capturing device **18** or user device **12** in each system **100** transmits imaging data to the data converter **16** in the central server **202** for processing. Specifically, the data converter **16** can detect the change in spatial relation between the optical markers **24** at each tracking device **20** whenever a participant provides a physical input to their tracking device **20**, and can generate an action in the virtual world **25** corresponding to the change in spatial relation. This action may be observed by the participant providing the physical input, as well as other participants in the virtual world **25**.

[0097] FIG. **32** is a multi-user system **204** according to a further embodiment, and is similar to the multi-user systems **200** and **202** depicted in FIGS. **30** and **31**, except for the following difference. In the embodiment of FIG. **32**, the systems **100** need not be connected to one another through a central server **202**. As shown in FIG. **32**, the systems **100** can be directly connected to one another through a network. The network may be a Local Area Network (LAN) and may be wireless, wired, or a combination thereof.

[0098] FIGS. **33**, **34**, and **35** illustrate example actions generated in a virtual world according to different embodiments. In each of FIGS. **33**, **34**, and **35**, a virtual world **25** is displayed on an output device **14** of a user device **12**. User interface (UI) elements may be provided in the virtual world **25** to enhance user experience with the example system. The UI elements may include a virtual arm, virtual hand, virtual equipment (such as a virtual gun or laser pointer), virtual objects, etc. A user can navigate through, and perform different actions in, the virtual world **25** using the UI elements.

[0099] FIG. **33** is an example of navigation interaction in the virtual world **25**. Specifically, a user can navigate through the virtual world **25** by moving the tracking device **20** in the real world. In FIG. **33**, a virtual arm **28** with a hand holding a virtual gun **30** is provided in the virtual world **25**. The virtual arm **28** and virtual gun **30** create a strong visual cue helping the user to immerse into the virtual world **25**. As shown in FIG. **33**, an upper portion **28-1** of the virtual arm **28** (above the

elbow) is bound to a hypothetical shoulder position in the virtual world **25**, and a lower portion **28-2** of the virtual arm **28** (the virtual hand) is bound to the virtual gun **30**. The elbow location and orientation of the virtual arm **28** can be interpolated using inverse kinetics which is known to those of ordinary skill in the art.

[0100] The scale of the virtual world **25** may be adjusted such that the location of the virtual equipment (virtual arm **28** and gun **30**) in the virtual world **25** appears to correspond to the location of the user's hand in the real world. The virtual equipment can also be customized to reflect user operation. For example, when the user presses the trigger **22-2** on the rig **22**, a trigger on the virtual gun **30** will move accordingly.

[0101] In the example of FIG. **33**, the user can use the tracking device **20** as a joystick to navigate in the virtual world **25**. As previously mentioned, the image capturing device **18** has a limited field-of-view, which limits the detectable range of motions on the tracking device **20**. In some embodiments, an accumulative control scheme can be used in the system, so that the user can use a small movement of the tracking device **20** to control a larger movement in the virtual world **25**. The accumulative control scheme may be provided as follows.

[0102] First, the user presses the trigger **22-2** on the tracking device **20** to record a reference transformation. Next, the user moves the tracking device **20** a distance D away from its reference/original position. Next, the data converter **16** calculates the difference in position and rotation between the current transformation and reference transformation. Next, the difference in position and rotation is used to calculate the velocity and angular velocity at which the virtual objects move around the virtual world **25**. It is noted that if the user keeps the same relative difference to the reference transformation, the virtual object will move constantly toward that direction. For example, a velocity Vg of the virtual gun **30** may be calculated using the following equation:

$$Vg=C\times(T\text{ref}-T\text{current})$$

where C is a speed constant, Tref is the reference transformation, and Tcurrent is the current transformation.

[0103] Referring to FIG. **33**, when the user moves the tracking device **20** by the distance D and velocity V in the real world, the virtual arm **28** moves the virtual gun **30** from a first position **30'** to a second position **30"** by a distance D' and velocity V' in the virtual world **25**. The distance D' and velocity V' in the virtual world **25** may be scaled proportionally to the distance D and velocity V in the real world. Accordingly, the user can intuitively sense how much the virtual gun **30** has moved, and how fast the virtual gun **30** is moving in the virtual world **25**.

[0104] In the example of FIG. **33**, the virtual gun **30** is moved from left to right in the X-axis of the virtual world **25**. Nevertheless, it should be understood that the user can move the virtual arm **28** and gun **30** anywhere along or about the X, Y, and Z axes of the virtual world **25**, either via translation and/or rotation.

[0105] In some embodiments, the user may navigate and explore the virtual world **25** by foot or in a virtual vehicle. This includes navigating on ground, water, or air in the virtual world **25**. When navigating by foot, the user can move the tracking device **20** front/back to move corresponding virtual elements forward/backward or move the tracking device **20** left/right to strafe (move virtual elements sideways). The user can also turn user device **12** to turn the virtual elements or change the view in the virtual world **25**. When controlling a virtual vehicle, the user can use the tracking device **20** to go forward/backward, or turn/tilt left or right. For example, when flying the virtual vehicle, the user can move the tracking device **20** up/down and the trigger **22-2** to control the throttle. Turning the user device **12** should have no effect on the direction of the virtual vehicle, since the user should be able to look around in the virtual world **25** without the virtual vehicle changing direction (as in the real world).

[0106] As previously described, actions can be generated in the virtual world **25**, if the change in spatial relation between the optical markers **24** falls within a predetermined threshold range. FIGS. **34** and **35** illustrate different types of actions that can be generated in the virtual world **25**. Specifically, FIGS. **34** and **35** involve using a telekinesis scheme to move objects in the virtual world **25** whereby the movement range is greater than the sensing area of the tracking device **20**. Using the telekinesis scheme, a user can grab, lift or turn remote virtual objects in the virtual world **25**. Telekinesis provides a means of interacting with virtual objects in the virtual world **25**, especially when physical feedback (e.g., object hardness, weight, etc.) is not applicable. Telekinesis may be used in conjunction with the accumulative control scheme (described previously in FIG. **33**) or with a miniature control scheme.

[0107] FIG. **34** is an example of accumulative telekinesis interaction in the virtual world **25**. Specifically, FIG. **34** illustrates an action whereby a user can move another virtual object **32** using the virtual arm **28** and the virtual gun **30**. In FIG. **34**, the virtual object **32** is located at a distance from the virtual gun **30**, and synchronized with the virtual gun **30** such that the virtual object **32** moves in proportion with the virtual gun **30**. To move the virtual object **32**, the user may provide a physical input to the tracking device **20** causing a change in spatial relation of/between the optical markers **24**. The change in spatial relation may be, for example, a translation of the tracking device **20** by a distance D in the X-axis in the real world. If the change in spatial relation (i.e., distance D) falls within a predetermined distance range, the data converter **16** then generates an action in the virtual world **25**. Specifically, the action involves moving the virtual gun **30** from a first position **30'** to a second position **30"** by a distance D' in the X-axis and an angle θ' about the Z-axis of the virtual world **25**. The distance D' and angle θ' in the virtual world **25** may be proportional to the distance D and angle θ in the real world. Accordingly, the user can intuitively sense how much the virtual gun **30** has moved, how fast the virtual gun **30** is moving, and the actual path traversed by the virtual gun **30** in the virtual world **25**. As mentioned above, since the virtual object **32** is synchronized with the virtual gun **30** and moves with the virtual gun **30**, the virtual object **32** also moves by a distance D' in the X-axis and an angle θ' about the Z-axis of the virtual world **25**. Accordingly, the user can use the virtual gun **30** to control objects at a distance in the virtual world **25**. The velocity Vo of the virtual object **32** may be calculated using the following equation:

$$Vo=C\times(T\text{ref}-T\text{current})$$

where C is a speed constant, Tref is the reference transformation, and Tcurrent is the current transformation.

[0108] FIG. **35** is an example of miniature telekinesis interaction in the virtual world **25**. FIG. **35** also illustrates an action whereby a user can move another virtual object **32** using the virtual arm **28** and the virtual gun **30**. However,

unlike the example of FIG. **34**, the virtual object **32** in FIG. **35** is synchronized with the virtual gun **30** such that the virtual object **32** moves in greater proportion relative to the virtual gun **30**. To move the virtual object **32** in FIG. **35**, the user may provide a physical input to the tracking device **20** causing a change in spatial relation between the optical markers **24**. The change in spatial relation may be, for example, a translation of the tracking device **20** by a distance D in the X-axis in the real world. If the change in spatial relation (i.e., distance D) falls within a predetermined distance range, the data converter **16** then generates an action in the virtual world **25**. Specifically, the action involves moving the virtual gun **30** from a first position **30'** to a second position **30"** by a distance D' in the X-axis and an angle θ' about the Z-axis of the virtual world **25**. The distance D' and angle θ' in the virtual world **25** may be proportional to the distance D and angle θ in the real world. Accordingly, the user can intuitively sense how much the virtual gun **30** has moved, how fast the virtual gun **30** is moving, and the actual path traversed by the virtual gun **30** in the virtual world **25**. As mentioned above, the virtual object **32** in FIG. **35** is synchronized with the virtual gun **30** and moves in greater proportion relative to the virtual gun **30**. Thus, the action also involves moving the virtual object **32** from a first position **32'** to a second position **32"** by a distance D" in the X-axis and an angle θ" about the Z-axis of the virtual world **25**, whereby D">D' and θ"=θ'. Accordingly, the user can use the virtual gun **30** to control virtual objects at a distance in the virtual world **25**, and manipulate the virtual objects to have a wider range of motion in the virtual world **25**.

[0109] As shown in FIG. **35**, a miniature version **32-1** of the virtual object **32** is disposed on the virtual gun **30**. The miniature telekinesis control scheme may be provided as follows. First, the user presses the trigger **22-2** on the tracking device **20** to record a reference transformation. Next, the user moves the tracking device **20** a certain distance away from the reference transformation to a new transformation. Next, the transformation matrix between the current transformation and the reference transformation is calculated. Next, the transformation matrix is multiplied by a scale factor, which reflects the scale difference between the object **32** and the miniature version **32-1**. The new transformation Tnew of the virtual object **32** in FIG. **35** may be calculated using the following equation:

$$T\text{new}=T\text{orig}+S\times(T\text{ref}-T\text{current})$$

where Torig is the original transformation of the virtual object **32**, S is a scale constant between the object **32** and the miniature version **32-1**, Tref is the reference transformation, and Tcurrent is the current transformation.

[0110] Additional UI (user interface) guides can be added to help the user understand the status of the tracking or action. For example, linear arrows can be used to represent how far/fast the virtual elements are moving in a straight line, and curvilinear arrows can be used to represent how far/fast the virtual elements are rotating. The arrows may be a combination of linear arrows and curvilinear arrows, for example, as shown in FIGS. **33**, **34**, and **35**. In some embodiments, status bars or circles may be used to represent the analog value of the user input (for example, how fast the user is pedaling).

[0111] In the examples of FIGS. **34** and **35**, the virtual object **32** is controlled using the telekinesis scheme, which offers the following benefits over shadowing. In shadowing, a virtual character follows exactly a human's movements. First, shadowing does not work if the virtual character has a different proportion or scale from the controller. Unlike shadowing, the example system works well with different proportions and scales. In particular, proportion is not a critical factor in the example system, because the virtual arm **28** is controlled using relative motion.

[0112] Second, the user usually has to wear heavy sensors with cords during shadowing. The example system, in contrast, is lightweight and cordless.

[0113] Third, in shadowing, the movement of a virtual arm may be impeded when the controller's arm is blocked by physical obstacles or when carrying heavy weight. In contrast, the telekinesis control scheme in the example system is more intuitive, because it is not subject to physical impediments and the control is relative.

[0114] FIGS. **36**, **37**, **38**, and **39** illustrate further example actions generated in a virtual world according to different embodiments. The embodiments in FIGS. **36**, **37**, **38**, and **39** are similar to those described in FIGS. **33**, **34**, and **35**, but have at least the following difference. In the embodiments of FIGS. **36**, **37**, **38**, and **39**, the virtual gun **30** includes a pointer generating a laser beam **34**, and the virtual world **25** includes other types of user interfaces and virtual elements. The laser beam **34** represents the direction in which the virtual gun **30** is pointed and provides a visual cue for the user (thereby serving as pointing device). In addition, the laser beam **34** can be used to focus on different virtual objects, and to perform various actions (e.g., shoot, push, select, etc.) on the different virtual objects in the virtual world **25**.

[0115] Referring to FIG. **36**, a user can focus the laser beam **34** on the virtual object **32** by moving the virtual gun **30** using the method described in FIG. **33**. Once the laser beam **34** is focused on the virtual object **32**, different actions (e.g., shooting, toppling, moving, etc.) can be performed. For example, the user may provide a physical input to the tracking device **20** causing a change in spatial relation between the optical markers **24**. If the change in spatial relation falls within a predetermined threshold range, the data converter **16** generates an action in the virtual world **25**, whereby the virtual gun **30** fires a shot at the virtual object **32** causing the virtual object **32** to topple over or disappear. In some embodiments, after the laser beam **34** is focused on the virtual object **32**, the user may be able to move the virtual object **32** around using one or more of the methods described in FIG. **34** or **35**. For example, to 'lock' onto the virtual object **32**, the user may press and hold the trigger **22-2** on the tracking device **20**. To drag or move the virtual object **32** around, the user may press the trigger **22-2** and move the tracking device **20** using the laser beam **34** as a guiding tool.

[0116] In some embodiments, the user can use the virtual gun **30** to interact with different virtual user interfaces (UIs) in the virtual world **25**. The mode of interaction with the virtual UIs may be similar to real world interaction with conventional UIs (e.g., buttons, dials, checkboxes, keyboards, etc.). For example, referring to FIG. **37**, a virtual user interface may include a tile of virtual buttons **36**, and the user can select a specific button **36** by focusing the laser beam **34** on that virtual button. As shown in FIG. **38**, another type of virtual user interface may be a virtual keyboard **38**, and the user can select a specific key on the virtual keyboard **38** by focusing the laser beam **34** on that virtual key. For example, to select ('tap') a virtual button or key, the user may press the trigger **22-2** on the tracking device **20** once.

[0117] In some embodiments, a plurality of virtual user interfaces **40** may be provided in the virtual world **25**, as shown in FIG. **39**. In those embodiments, the user can use the pointer/laser beam **34** to interact with each of the different virtual user interfaces **40** simultaneously. Since the example system allows a wide range of motion in six degrees-of-freedom in the virtual space, the virtual user interfaces **40** can therefore be placed in any location within the virtual world **25**.

[0118] In an example embodiment, a virtual pointer can be implemented using one unique marker and the image recognition techniques described above. In the simplest embodiment, we use one marker to track the user's hand in the virtual world. An example embodiment is shown in FIG. **40**. This embodiment can be implemented as follows:

[0119] We can use the VR headset to provide us with the transformation of the character's head in virtual reality. Because our physical head is rotating about the neck joint, we can store values representing this motion in: Tneck. If the device doesn't provide absolute position tracking and only has orientation tracking (e.g., only uses a gyroscope), we can use an average adult height as the position (e.g. (0, AverageAdultHeight, 0));

[0120] The camera lens has a relative transformation against T_{neck}; we can store values representing this transformation in $T_{neck\text{-}camera}$;

[0121] The image recognition software can analyze the image provided by the camera and obtain the transformation of marker A against the camera lens; we can store values representing this transformation in $T_{camera\text{-}marker}$;

[0122] In the real world, the marker A has a transformation against the user's wrist or hand; we can store values representing this transformation in $T_{marker\text{-}hand}$;

[0123] The transformation of the virtual character can be stored in $T_{character}$; and

[0124] The absolute transformation of the user's hand, T_{hand} can be computed as follows:

$$T_{hand}=T_{character}+T_{neck}+T_{neck\text{-}camera}+T_{camera\text{-}marker}+T_{marker\text{-}hand}$$

[0125] In the example embodiment, we can add another marker and use the spatial difference to perform different actions. Also, we can include more markers into the system for more actions. Various example embodiments are shown in FIG. **41**. Additionally, markers are not limited to 2D planar markers; we can use 3D objects as our marker.

[0126] In another example embodiment, character navigation can be implemented with an accelerometer or pedometer. We can use this process to take acceleration data from a user device's accelerometer and convert the acceleration data into character velocity in the virtual world. This embodiment can be implemented as follows:

[0127] We record the acceleration data;

[0128] Process the raw acceleration value with a noise reduction function; and

[0129] When the processed value passes certain pre-determined limits, step count plus one, and then add a certain velocity onto the virtual character so it moves in the virtual world.

[0130] This embodiment can be specifically implemented as follows:

```
// FastAccel tracks current device acceleration in faster rate
// SlowAccel tracks current device acceleration in slower rate
// DeltaTime is the time span for each frame refreshing =
// 1 / FramePerSecond
// Delta is the difference between FastAccel and SlowAccel
// When Delta become greater than HighLimit, we set State to true
and count one step
// When Delta become smaller than LowLimit, we set State to false
Function StepCounter
    FastAccel = Lerp (FastAccel, DeviceAccelY, DeltaTime * FastFreq)
    SlowAccel = Lerp (SlowAccel, DeviceAccelY,
    DeltaTime * SlowFreq)
    Delta - FastAccel - SlowAccel        if State is not true:
        if Delta > HighLimit
            State = true
            Step++
        else if Delta < LowLimit
            State = false
    SlowAccel = FastAccel; return
    Step
// LastStep: Step value in last frame
Function PlayerControl
    if Step > LastStep
        // By default, CharacterDirection is the direction that character
        // facing projected on y plane
        CharacterVelocity += CharacterDirection * StepSpan LastStep
        = Step
```

[0131] Using the example embodiment described above, the user can just walk on the spot or walk in place and their virtual character will walk in a corresponding manner in the virtual world. This example embodiment is shown in FIG. **42**.

[0132] FIGS. **43** and **44** depict different embodiments in which the optical markers are adapted to a game controller. Referring to FIGS. **43** and **44**, the tracking device **20** may be replaced by a game controller **42** on which optical markers **24** (e.g., first marker **24-1** and second marker **24-2**) are mounted. The game controller **42** may include a handle **42-1** and a marker holder **42-2**. The optical markers **24** are configured to be attached to the marker holder **42-2**. The "trigger" mechanism on the tracking device **20** may be replaced by direction control buttons **42-3** and action buttons **42-4** on the game controller **42**. Specifically, the direction control buttons **42-3** can be used to control the direction of navigation in the virtual world, and the action buttons **42-4** can be used to perform certain actions in the virtual world (e.g., shoot, toggle, etc.).

[0133] In some embodiments, the direction control buttons **42-3** and action buttons **42-4** may be integrated onto the tracking device **20**, for example, as illustrated in FIG. **45**.

[0134] In the embodiments of FIGS. **43**, **44**, and **45**, the direction control buttons **42-3** and action buttons **42-4** may be configured to send electrical signals to, and receive electrical signals from, one or more of the components depicted in FIG. **1**. As such, the game controller **42** in FIG. **44**, and also the tracking device **20** in FIG. **45**, may be operatively connected to one or more of the media source **10**, user device **12**, output device **14**, data converter **16**, and image capturing device **18** depicted in FIG. **1**, via a network or any type of communication links that allow transmission of data from one component to another. The network may include Local Area Networks (LANs), Wide Area Networks (WANs), Bluetooth™, and/or Near Field Communication (NFC) technologies, and may be wireless, wired, or a combination thereof.

[0135] FIG. **46** is a flow chart illustrating an example method for converting a physical input from a user into an

action in a virtual world. Referring to FIG. **46**, method **300** includes the following steps. First, images of one or more markers on a tracking device (e.g., tracking device **20**) are obtained (Step **302**). The images may be captured using an image capturing device (e.g., image capturing device **18**). Next, reference data relative to the one or more markers at time t**0** are determined using the obtained images (Step **304**). The reference data may be determined using a data converter (e.g., data converter **16**). Next, a change in spatial relation relative to the reference data and positions of the one or more markers at time t**1** is measured, whereby the change in spatial relation is generated by a physical input applied on the tracking device (Step **306**). Time t**1** is a point in time that is later than time t**0**. The change in spatial relation may be measured by the data converter. The user input may correspond to a physical input to the tracking device **20** causing the one or more markers to move relative to each other. The user input may also correspond to a movement of the tracking device **20** in the real world. Next, the data converter determines whether the change in spatial relation relative to the one or more markers at time t**1** falls within a predetermined threshold range (Step **308**). If the change in spatial relation relative to the one or more markers at time t**1** falls within the predetermined threshold range, the data converter generates an action in a virtual world rendered on a user device (e.g., user device **12**) (Step **310**). In some embodiments, any of the one or more markers may be used to determine a position of an object in the virtual world. Specifically, the data converter can calculate the spatial difference of any of the one or more markers between times t**0** and t**1** to determine the position of the object in the virtual world. In some embodiments, actions in the virtual world may be generated based on the observable presence of the markers. In those embodiments, the disappearance and/or reappearance of individual markers between times t**0** and t**1** may result in certain actions being generated in the virtual world.

[0136] The methods disclosed herein may be implemented as a computer program product, i.e., a computer program tangibly embodied in a non-transitory information carrier, e.g., in a machine-readable storage device, or a tangible non-transitory computer-readable medium, for execution by, or to control the operation of, data processing apparatus, e.g., a programmable processor, a computer, or multiple computers. A computer program may be written in any form of programming language, including compiled or interpreted languages, and it may be deployed in any form, including as a standalone program or as a module, component, subroutine, or other unit suitable for use in a computing environment. A computer program may be deployed to be executed on one computer or on multiple computers at one site or distributed across multiple sites and interconnected by a communication network. A portion or all of the systems disclosed herein may also be implemented by an application-specific integrated circuit (ASIC), a field-programmable gate array (FPGA), a complex programmable logic device (CPLD), a printed circuit board (PCB), a digital signal processor (DSP), a combination of programmable logic components and programmable interconnects, a single central processing unit (CPU) chip, a CPU chip combined on a motherboard, a general purpose computer, or any other combination of devices or modules capable of processing optical image data and generating actions in a virtual world based on the methods disclosed herein. It is understood that the above-described example embodiments are for illustrative purposes only and are not restrictive of the claimed subject matter. Certain parts of the system can be deleted, combined, or rearranged, and additional parts can be added to the system. It will, however, be evident that various modifications and changes may be made without departing from the broader spirit and scope of the claimed subject matter as set forth in the claims that follow. The specification and drawings are accordingly to be regarded as illustrative rather than restrictive. Other embodiments of the claimed subject matter may be apparent to those of ordinary skill in the art from consideration of the specification and practice of the claimed subject matter disclosed herein.

[0137] Referring now to FIG. **47**, a processing flow diagram illustrates an example embodiment of a method **1100** as described herein. The method **1100** of an example embodiment includes: receiving image data from an image capturing subsystem, the image data including at least a portion of at least one reference image, the at least one reference image representing a portion of a set of reference data (processing block **1110**); receiving position and orientation data of the image capturing subsystem, the position and orientation data representing another portion of the reference data (processing block **1120**); measuring, by use of a data processor, a change in spatial relation relative to the reference data when a physical input is applied to a tracking subsystem (processing block **1130**); and generating an action in a virtual world, the action corresponding to the measured change in spatial relation (processing block **1140**).

[0138] FIG. **48** shows a diagrammatic representation of a machine in the example form of an electronic device, such as a mobile computing and/or communication system **700** within which a set of instructions when executed and/or processing logic when activated may cause the machine to perform any one or more of the methodologies described and/or claimed herein. In alternative embodiments, the machine operates as a standalone device or may be connected (e.g., networked) to other machines. In a networked deployment, the machine may operate in the capacity of a server or a client machine in server-client network environment, or as a peer machine in a peer-to-peer (or distributed) network environment. The machine may be a personal computer (PC), a laptop computer, a tablet computing system, a Personal Digital Assistant (PDA), a cellular telephone, a smartphone, a web appliance, a set-top box (STB), a network router, switch or bridge, or any machine capable of executing a set of instructions (sequential or otherwise) or activating processing logic that specify actions to be taken by that machine. Further, while only a single machine is illustrated, the term "machine" can also be taken to include any collection of machines that individually or jointly execute a set (or multiple sets) of instructions or processing logic to perform any one or more of the methodologies described and/or claimed herein.

[0139] The example mobile computing and/or communication system **700** includes a data processor **702** (e.g., a System-on-a-Chip [SoC], general processing core, graphics core, and optionally other processing logic) and a memory **704**, which can communicate with each other via a bus or other data transfer system **706**. The mobile computing and/or communication system **700** may further include various input/output (I/O) devices and/or interfaces **710**, such as a touchscreen display, an audio jack, and optionally a network interface **712**. In an example embodiment, the network interface **712** can include one or more radio transceivers configured for compatibility with any one or more standard wireless

and/or cellular protocols or access technologies (e.g., 2nd (2G), 2.5, 3rd (3G), 4th (4G) generation, and future generation radio access for cellular systems, Global System for Mobile communication (GSM), General Packet Radio Services (GPRS), Enhanced Data GSM Environment (EDGE), Wideband Code Division Multiple Access (WCDMA), LTE, CDMA2000, WLAN, Wireless Router (WR) mesh, and the like). Network interface **712** may also be configured for use with various other wired and/or wireless communication protocols, including TCP/IP, UDP, SIP, SMS, RTP, WAP, CDMA, TDMA, UMTS, UWB, WiFi, WiMax, Bluetooth, IEEE 802.11x, and the like. In essence, network interface **712** may include or support virtually any wired and/or wireless communication mechanisms by which information may travel between the mobile computing and/or communication system **700** and another computing or communication system via network **714**.

[0140] The memory **704** can represent a machine-readable medium on which is stored one or more sets of instructions, software, firmware, or other processing logic (e.g., logic **708**) embodying any one or more of the methodologies or functions described and/or claimed herein. The logic **708**, or a portion thereof, may also reside, completely or at least partially within the processor **702** during execution thereof by the mobile computing and/or communication system **700**. As such, the memory **704** and the processor **702** may also constitute machine-readable media. The logic **708**, or a portion thereof, may also be configured as processing logic or logic, at least a portion of which is partially implemented in hardware. The logic **708**, or a portion thereof, may further be transmitted or received over a network **714** via the network interface **712**. While the machine-readable medium of an example embodiment can be a single medium, the term "machine-readable medium" should be taken to include a single non-transitory medium or multiple non-transitory media (e.g., a centralized or distributed database, and/or associated caches and computing systems) that store the one or more sets of instructions. The term "machine-readable medium" can also be taken to include any non-transitory medium that is capable of storing, encoding or carrying a set of instructions for execution by the machine and that cause the machine to perform any one or more of the methodologies of the various embodiments, or that is capable of storing, encoding or carrying data structures utilized by or associated with such a set of instructions. The term "machine-readable medium" can accordingly be taken to include, but not be limited to, solid-state memories, optical media, and magnetic media.

[0141] With general reference to notations and nomenclature used herein, the description presented herein may be disclosed in terms of program procedures executed on a computer or a network of computers. These procedural descriptions and representations may be used by those of ordinary skill in the art to convey their work to others of ordinary skill in the art.

[0142] A procedure is generally conceived to be a self-consistent sequence of operations performed on electrical, magnetic, or optical signals capable of being stored, transferred, combined, compared, and otherwise manipulated. These signals may be referred to as bits, values, elements, symbols, characters, terms, numbers, or the like. It should be noted, however, that all of these and similar terms are to be associated with the appropriate physical quantities and are merely convenient labels applied to those quantities. Further, the manipulations performed are often referred to in terms such as adding or comparing, which operations may be executed by one or more machines. Useful machines for performing operations of various embodiments may include general-purpose digital computers or similar devices. Various embodiments also relate to apparatus or systems for performing these operations. This apparatus may be specially constructed for a purpose, or it may include a general-purpose computer as selectively activated or reconfigured by a computer program stored in the computer. The procedures presented herein are not inherently related to a particular computer or other apparatus. Various general-purpose machines may be used with programs written in accordance with teachings herein, or it may prove convenient to construct more specialized apparatus to perform methods described herein.

[0143] The Abstract of the Disclosure is provided to allow the reader to quickly ascertain the nature of the technical disclosure. It is submitted with the understanding that it will not be used to interpret or limit the scope or meaning of the claims. In addition, in the foregoing Detailed Description, it can be seen that various features are grouped together in a single embodiment for the purpose of streamlining the disclosure. This method of disclosure is not to be interpreted as reflecting an intention that the claimed embodiments require more features than are expressly recited in each claim. Rather, as the following claims reflect, inventive subject matter lies in less than all features of a single disclosed embodiment. Thus, the following claims are hereby incorporated into the Detailed Description, with each claim standing on its own as a separate embodiment.

1. An apparatus comprising:
- a processor;
- an image capturing subsystem;
- a tracking subsystem including at least one reference image; and
- a data conversion subsystem in data communication with the processor and the image capturing subsystem, the data conversion subsystem to:
  - receive image data from the image capturing subsystem, the image data including at least a portion of the at least one reference image, the at least one reference image representing a portion of a set of reference data;
  - receive position and orientation data of the image capturing subsystem, the position and orientation data representing another portion of the reference data;
  - measure a change in spatial relation relative to the reference data when a physical input is applied to the tracking subsystem; and
  - generate an action in a virtual world, the action corresponding to the measured change in spatial relation.

2. The apparatus of claim **1** wherein the data conversion subsystem being further configured to determine whether the change in spatial relation falls within a predetermined threshold range and to generate the action in the virtual world, if the change in spatial relation falls within the predetermined threshold range.

3. The apparatus of claim **1** wherein the tracking subsystem includes one or more markers, the data conversion subsystem being further configured to measure the change in spatial relation relative to the one or more markers when a physical input is applied to the tracking subsystem.

4. The apparatus of claim **1** wherein the physical input applied to the tracking subsystem is a rotation or a translation of a portion of the tracking subsystem.

5. The apparatus of claim **1** wherein the physical input applied to the tracking subsystem is a rotation or a translation of the tracking subsystem itself.

6. The apparatus of claim **1** wherein the change in spatial relation is measured in two-dimensional space or three-dimensional space.

7. The apparatus of claim **1** wherein the image capturing subsystem includes a plurality of image capturing devices and the data conversion subsystem being further configured to receive image data from each of the plurality of image capturing devices and to synchronize the image data received from the plurality of image capturing devices.

8. The apparatus of claim **1** wherein the action in the virtual world is the movement or manipulation of a virtual object or the manipulation of a virtual user interface.

9. The apparatus of claim **1** wherein the action in the virtual world corresponds to control of a real world device.

10. The apparatus of claim **1** wherein the reference data includes accelerometer data from a user device.

11. A method comprising:

receiving image data from an image capturing subsystem, the image data including at least a portion of at least one reference image, the at least one reference image representing a portion of a set of reference data;

receiving position and orientation data of the image capturing subsystem, the position and orientation data representing another portion of the reference data;

measuring, by use of a data processor, a change in spatial relation relative to the reference data when a physical input is applied to the tracking subsystem; and

generating an action in a virtual world, the action corresponding to the measured change in spatial relation.

12. The method of claim **11** including determining whether the change in spatial relation falls within a predetermined threshold range and generating the action in the virtual world, if the change in spatial relation falls within the predetermined threshold range.

13. The method of claim **11** including measuring a change in spatial relation relative to one or more markers when a physical input is applied to the tracking subsystem.

14. The method of claim **11** wherein the physical input applied to the tracking subsystem is a rotation or a translation of the tracking subsystem itself or a portion of the tracking subsystem.

15. The method of claim **11** wherein the reference data includes accelerometer data from a user device.

16. The method of claim **11** wherein the change in spatial relation is measured in two-dimensional space or three-dimensional space.

17. The method of claim **11** including receiving image data from each of a plurality of image capturing devices and to synchronize the image data received from the plurality of image capturing devices.

18. The method of claim **11** wherein the action in the virtual world corresponds to the movement or manipulation of a virtual object or the manipulation of a virtual user interface or control of a real world device.

19. A non-transitory machine-useable storage medium embodying instructions which, when executed by a machine, cause the machine to:

receive image data from the image capturing subsystem, the image data including at least a portion of the at least one reference image, the at least one reference image representing a portion of a set of reference data;

receive position and orientation data of the image capturing subsystem, the position and orientation data representing another portion of the reference data;

measure a change in spatial relation relative to the reference data when a physical input is applied to the tracking subsystem; and

generate an action in a virtual world, the action corresponding to the measured change in spatial relation.

20. The instructions embodied in the machine-useable storage medium of claim **19** being further configured to determine whether the change in spatial relation falls within a predetermined threshold range and generating the action in the virtual world, if the change in spatial relation falls within the predetermined threshold range.

* * * * *