US009446319B2

(12) **United States Patent**
Barney et al.

(10) **Patent No.: US 9,446,319 B2**
(45) **Date of Patent: Sep. 20, 2016**

(54) **INTERACTIVE GAMING TOY**

(71) Applicant: **MQ GAMING, LLC**, Irvine, CA (US)

(72) Inventors: **Jonathan A. Barney**, Newport Beach, CA (US); **Denise C. Weston**, Wakefield, RI (US)

(73) Assignee: **MQ Gaming, LLC**, Irvine, CA (US)

(*) Notice: Subject to any disclaimer, the term of this patent is extended or adjusted under 35 U.S.C. 154(b) by 0 days.

(21) Appl. No.: **14/751,026**

(22) Filed: **Jun. 25, 2015**

(65) **Prior Publication Data**

US 2015/0290545 A1 Oct. 15, 2015

Related U.S. Application Data

(63) Continuation-in-part of application No. 14/720,080, filed on May 22, 2015, which is a continuation of application No. 14/464,652, filed on Aug. 20, 2014, now Pat. No. 9,039,533, which is a continuation of

(Continued)

(51) **Int. Cl.**
A63F 9/24 (2006.01)
A63F 13/00 (2014.01)
(Continued)

(52) **U.S. Cl.**
CPC ***A63F 13/822*** (2014.09); ***A63F 13/00*** (2013.01); ***A63F 13/10*** (2013.01); ***A63F 13/12*** (2013.01); ***A63F 13/211*** (2014.09); ***A63F 13/235*** (2014.09); ***A63F 13/245*** (2014.09);
(Continued)

(58) **Field of Classification Search**
CPC A63F 13/327; A63F 2300/406; A63H 2200/00; A63H 3/16; A63H 3/46
See application file for complete search history.

(56) **References Cited**

U.S. PATENT DOCUMENTS

973,105 A 10/1910 Chamberlain, Jr.
1,661,058 A 2/1928 Theremin
(Continued)

FOREIGN PATENT DOCUMENTS

CN 1032246 4/1989
CN 2113224 U 2/1992
(Continued)

OTHER PUBLICATIONS

"HyperScan", release date Oct. 2006. Source http://www.giantbomb.com/hyperscan/3045-1 041.
(Continued)

Primary Examiner — Steven J Hylinski
(74) *Attorney, Agent, or Firm* — Knobbe, Martens, Olson & Bear LLP

(57) **ABSTRACT**

An interactive gaming toy is provided for playing a game having both physical and virtual gameplay elements. The gaming toy comprises a physical toy, such as a toy wand, doll or action figure, having an RFID tag pre-programmed with a unique identifier that identifies the toy within an associated computer-animated game. The RFID tag stores information describing certain attributes or abilities of a corresponding virtual character or object in the computer-animated game. Additional information may be stored on the RFID tag as the corresponding virtual character evolves or changes over time based on player performance and/or gameplay progression. The interactive gaming toy thus allows developed character attributes and the like to be stored and easily transported to other games and compatible gaming platforms. One or more optional auxiliary components may be attached to the gaming toy to selectively create a modified gaming toy having additional desired functionality and/or aesthetics.

20 Claims, 17 Drawing Sheets

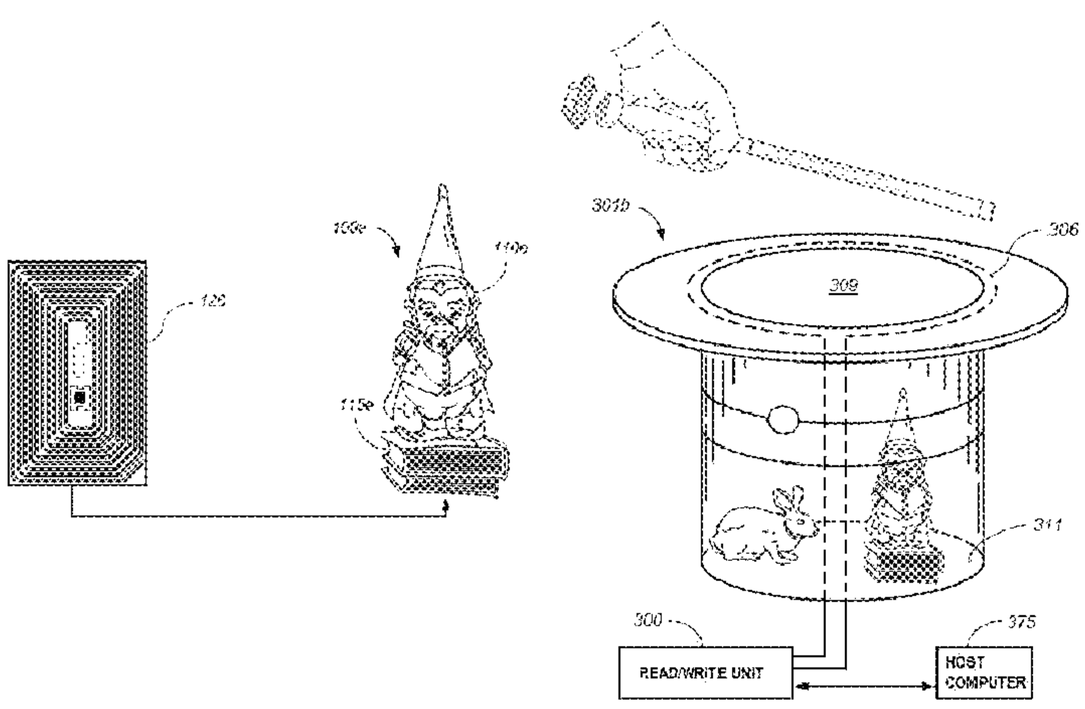

Related U.S. Application Data

application No. 13/801,955, filed on Mar. 13, 2013, now Pat. No. 8,814,688, which is a continuation of application No. 13/469,443, filed on May 11, 2012, now Pat. No. 8,475,275, which is a continuation of application No. 13/037,200, filed on Feb. 28, 2011, now Pat. No. 8,491,389, which is a continuation of application No. 11/777,874, filed on Jul. 13, 2007, now Pat. No. 7,896,742, which is a continuation of application No. 11/274,760, filed on Nov. 15, 2005, now Pat. No. 7,878,905, which is a continuation-in-part of application No. 10/954,025, filed on Sep. 29, 2004, now Pat. No. 7,445,550, which is a continuation-in-part of application No. 10/397,054, filed on Mar. 25, 2003, now Pat. No. 7,500,917.

(51) **Int. Cl.**

A63F 13/822	(2014.01)
A63F 13/235	(2014.01)
A63F 13/211	(2014.01)
G06F 3/0488	(2013.01)
A63F 13/25	(2014.01)
A63F 13/57	(2014.01)
A63H 30/04	(2006.01)
A63H 33/26	(2006.01)
A63J 21/00	(2006.01)
A63F 13/40	(2014.01)
A63F 13/30	(2014.01)
A63F 13/90	(2014.01)
A63F 13/245	(2014.01)
A63F 13/65	(2014.01)
A63F 13/73	(2014.01)
A63F 13/825	(2014.01)
A63F 13/98	(2014.01)
A63F 13/31	(2014.01)
A63F 13/95	(2014.01)
A63F 3/00	(2006.01)
A63F 1/04	(2006.01)
A63F 11/00	(2006.01)

(52) **U.S. Cl.**

CPC ***A63F 13/25*** (2014.09); ***A63F 13/31*** (2014.09); ***A63F 13/57*** (2014.09); ***A63F 13/65*** (2014.09); ***A63F 13/73*** (2014.09); ***A63F 13/825*** (2014.09); ***A63F 13/90*** (2014.09); ***A63F 13/95*** (2014.09); ***A63F 13/98*** (2014.09); ***A63H 30/04*** (2013.01); ***A63H 33/26*** (2013.01); ***A63J 21/00*** (2013.01); ***G06F 3/0488*** (2013.01); *A63F 1/04* (2013.01); *A63F 2003/00665* (2013.01); *A63F 2003/00826* (2013.01); *A63F 2009/2489* (2013.01); *A63F 2009/2492* (2013.01); *A63F 2011/0072* (2013.01); *A63F 2300/105* (2013.01); *A63F 2300/1025* (2013.01); *A63F 2300/1031* (2013.01); *A63F 2300/1062* (2013.01); *A63F 2300/5513* (2013.01); *A63F 2300/5533* (2013.01); *A63F 2300/807* (2013.01); *A63H 2200/00* (2013.01)

(56) **References Cited**

U.S. PATENT DOCUMENTS

1,789,680	A	1/1931	Gwinnett
2,001,366	A	5/1935	Mittelman
2,752,725	A	7/1956	Unsworth
2,902,023	A	9/1959	Waller
3,135,512	A	6/1964	Taylor
3,336,030	A	8/1967	Martell et al.
3,395,920	A	8/1968	Moe
3,454,920	A	7/1969	Mehr
3,456,134	A	7/1969	Ko
3,468,533	A	9/1969	House, Jr.
3,474,241	A	10/1969	Kuipers
D220,268	S	3/1971	Kliewer
3,572,712	A	3/1971	Vick
3,633,904	A	1/1972	Kojima
3,660,648	A	5/1972	Kuipers
3,707,055	A	12/1972	Pearce
3,795,805	A	3/1974	Swanberg et al.
3,843,127	A	10/1974	Lack
3,949,364	A	4/1976	Clark et al.
3,949,679	A	4/1976	Barber
3,973,257	A	8/1976	Rowe
3,978,481	A	8/1976	Angwin et al.
3,997,156	A	12/1976	Barlow et al.
4,009,619	A	3/1977	Snymann
4,038,876	A	8/1977	Morris
4,055,341	A	10/1977	Martinez
4,063,111	A	12/1977	Dobler et al.
4,153,250	A	5/1979	Anthony
4,166,406	A	9/1979	Maughmer
4,171,737	A	10/1979	McLaughlin
4,175,665	A	11/1979	Dogliotti
4,205,785	A	6/1980	Stanley
4,231,077	A	10/1980	Joyce et al.
4,240,638	A	12/1980	Morrison et al.
4,282,681	A	8/1981	McCaslin
4,287,765	A	9/1981	Kreft
4,296,929	A	10/1981	Meyer et al.
4,303,978	A	12/1981	Shaw
4,318,245	A	3/1982	Stowell et al.
4,321,678	A	3/1982	Krogmann
4,325,199	A	4/1982	McEdwards
4,337,948	A	7/1982	Breslow
4,342,985	A	8/1982	Desjardins
4,402,250	A	9/1983	Baasch
4,412,205	A	10/1983	Von Kemenczky
4,425,488	A	1/1984	Moskin
4,443,866	A	4/1984	Burgiss
4,450,325	A	5/1984	Luque
4,503,299	A	3/1985	Henrard
4,514,600	A	4/1985	Lentz
4,514,798	A	4/1985	Lesche
4,540,176	A	9/1985	Baer
4,546,551	A	10/1985	Franks
4,558,604	A	12/1985	Auer
4,561,299	A	12/1985	Orlando
4,575,621	A	3/1986	Dreifus
4,578,674	A	3/1986	Baker et al.
4,595,369	A	6/1986	Downs
4,623,887	A	11/1986	Welles
4,623,930	A	11/1986	Oshima
4,627,620	A	12/1986	Yang
4,645,458	A	2/1987	Williams
4,672,374	A	6/1987	Desjardins
4,678,450	A	7/1987	Scolari et al.
4,695,058	A	9/1987	Carter, III et al.
4,695,953	A	9/1987	Blair et al.
4,699,379	A	10/1987	Chateau et al.
4,739,128	A	4/1988	Grisham
4,750,733	A	6/1988	Foth
4,761,540	A	8/1988	McGeorge
4,776,253	A	10/1988	Downes
4,787,051	A	11/1988	Olson
4,816,810	A	3/1989	Moore
4,817,950	A	4/1989	Goo
4,819,182	A	4/1989	King et al.
4,837,568	A	6/1989	Snaper et al.
4,839,838	A	6/1989	LaBiche et al.
4,843,568	A	6/1989	Kreuger et al.
4,846,568	A	7/1989	Krueger
4,849,655	A	7/1989	Bennett
4,851,685	A	7/1989	Dubgen
4,858,390	A	8/1989	Kenig
4,858,930	A	8/1989	Sato

(56) **References Cited**

U.S. PATENT DOCUMENTS

4,862,165 A 8/1989 Gart
4,882,717 A 11/1989 Hayakawa et al.
4,891,032 A 1/1990 Davis
4,904,222 A 2/1990 Gastgeb et al.
4,910,677 A 3/1990 Remedio et al.
4,914,598 A 4/1990 Krogmann
4,918,293 A 4/1990 McGeorge
4,924,358 A 5/1990 VonHeck
4,932,917 A 6/1990 Klitsner
4,957,291 A 9/1990 Miffitt
4,960,275 A 10/1990 Magon
4,961,369 A 10/1990 McGill
4,964,837 A 10/1990 Collier
4,967,321 A 10/1990 Cimock
4,969,647 A 11/1990 Mical et al.
4,980,519 A 12/1990 Mathews
4,988,981 A 1/1991 Zimmerman et al.
4,994,795 A 2/1991 MacKenzie
5,011,161 A 4/1991 Galphin
5,036,442 A 7/1991 Brown
RE33,662 E 8/1991 Blair et al.
5,045,843 A 9/1991 Hansen
5,048,831 A 9/1991 Sides
D320,624 S 10/1991 Taylor
5,058,480 A 10/1991 Suzuki et al.
5,059,958 A 10/1991 Jacobs et al.
5,062,696 A 11/1991 Oshima
5,068,645 A 11/1991 Drumm
D322,242 S 12/1991 Cordell
5,076,584 A 12/1991 Openiano
D325,225 S 4/1992 Adhida
5,114,155 A 5/1992 Tillery et al.
5,114,344 A 5/1992 Fumagalli et al.
5,124,938 A 6/1992 Algrain
5,127,657 A 7/1992 Ikezawa et al.
5,128,671 A 7/1992 Thomas, Jr.
D328,463 S 8/1992 King et al.
5,136,222 A 8/1992 Yamamoto
5,138,154 A 8/1992 Hotelling
5,145,446 A 9/1992 Kuo
D331,058 S 11/1992 Morales
5,166,502 A 11/1992 Rendleman
5,170,002 A 12/1992 Suzuki et al.
5,175,481 A 12/1992 Kanno
5,177,311 A 1/1993 Suzuki et al.
5,178,477 A 1/1993 Gambaro
5,181,181 A 1/1993 Glynn
5,184,830 A 2/1993 Okada et al.
5,188,368 A 2/1993 Ryan
5,190,285 A 3/1993 Levy et al.
5,192,082 A 3/1993 Inoue et al.
5,192,823 A 3/1993 Suzuki et al.
5,194,006 A 3/1993 Zaenglein, Jr.
5,194,048 A 3/1993 Briggs
5,202,844 A 4/1993 Kamio
5,207,426 A 5/1993 Inoue et al.
5,212,368 A 5/1993 Hara
5,213,327 A 5/1993 Kitaue
5,223,698 A 6/1993 Kapur
5,231,568 A 7/1993 Cohen et al.
D338,242 S 8/1993 Cordell
5,232,223 A 8/1993 Dornbusch
5,236,200 A 8/1993 McGregor et al.
5,247,651 A 9/1993 Clarisse
D340,042 S 10/1993 Copper et al.
5,259,626 A 11/1993 Ho
5,262,777 A 11/1993 Low et al.
D342,256 S 12/1993 Payne et al.
5,277,645 A 1/1994 Kelley et al.
5,279,513 A 1/1994 Connelly
5,280,744 A 1/1994 DeCarlo
D345,164 S 3/1994 Grae
5,290,964 A 3/1994 Hiyoshi et al.
5,292,124 A 3/1994 Carpenter
5,292,254 A 3/1994 Miller et al.
5,296,871 A 3/1994 Paley
5,299,967 A 4/1994 Gilbert
5,307,325 A 4/1994 Scheiber
5,310,192 A 5/1994 Miyake
5,317,394 A 5/1994 Hale
5,319,548 A 6/1994 Germain
5,320,358 A 6/1994 Jones
5,320,362 A 6/1994 Bear et al.
5,329,276 A 7/1994 Hirabayashi
5,332,322 A 7/1994 Gambaro
5,339,095 A 8/1994 Redford
D350,736 S 9/1994 Takahashi et al.
D350,782 S 9/1994 Barr
D351,430 S 10/1994 Barr
5,354,057 A 10/1994 Pruitt et al.
5,356,343 A 10/1994 Lovetere
5,357,267 A 10/1994 Inoue
5,359,321 A 10/1994 Ribic
5,359,348 A 10/1994 Pilcher et al.
5,363,120 A 11/1994 Drumm
5,365,214 A 11/1994 Angott et al.
5,366,229 A 11/1994 Suzuki
5,369,580 A 11/1994 Monji
5,369,889 A 12/1994 Callaghan
5,372,365 A 12/1994 McTeigue et al.
5,373,857 A 12/1994 Travers et al.
5,378,197 A 1/1995 Briggs
5,382,026 A 1/1995 Harvard et al.
5,392,613 A 2/1995 Goto
5,393,074 A 2/1995 Bear et al.
5,396,227 A 3/1995 Carroll et al.
5,396,265 A 3/1995 Ulrich et al.
5,403,238 A 4/1995 Baxter et al.
5,405,294 A 4/1995 Briggs
5,411,269 A 5/1995 Thomas
5,416,535 A 5/1995 Sato et al.
5,421,575 A 6/1995 Triner
5,421,590 A 6/1995 Robbins
5,422,956 A 6/1995 Wheaton
5,429,361 A 7/1995 Raven et al.
5,430,435 A 7/1995 Hoch
5,432,864 A 7/1995 Lu et al.
5,435,561 A 7/1995 Conley
5,435,569 A 7/1995 Zilliox
D360,903 S 8/1995 Barr et al.
5,439,199 A 8/1995 Briggs et al.
5,440,326 A 8/1995 Quinn
5,443,261 A 8/1995 Lee et al.
5,452,893 A 9/1995 Faulk et al.
5,453,053 A 9/1995 Danta et al.
5,453,758 A 9/1995 Sato
D362,870 S 10/1995 Oikawa
5,459,489 A 10/1995 Redford
5,469,194 A 11/1995 Clark et al.
5,481,957 A 1/1996 Paley
5,482,510 A 1/1996 Ishii et al.
5,484,355 A 1/1996 King
5,485,171 A 1/1996 Copper et al.
5,488,362 A 1/1996 Ullman et al.
5,490,058 A 2/1996 Yamasaki
5,498,002 A 3/1996 Gechter
5,502,486 A 3/1996 Ueda
5,506,605 A 4/1996 Paley
5,509,806 A 4/1996 Ellsworth
5,512,892 A 4/1996 Corballis et al.
5,516,105 A 5/1996 Eisenbrey et al.
5,517,183 A 5/1996 Bozeman
5,523,800 A 6/1996 Dudek
5,524,637 A 6/1996 Erickson
5,526,022 A 6/1996 Donahue et al.
5,528,265 A 6/1996 Harrison
5,531,443 A 7/1996 Cruz
5,533,933 A 7/1996 Garnjost et al.
5,541,860 A 7/1996 Takei et al.
5,550,721 A 8/1996 Rapisarda
5,551,701 A 9/1996 Bouton et al.
5,554,033 A 9/1996 Bizzi et al.
5,554,980 A 9/1996 Hashimoto et al.
5,561,543 A 10/1996 Ogawa

(56) **References Cited**

U.S. PATENT DOCUMENTS

5,563,628 A 10/1996 Stroop
5,569,085 A 10/1996 Igarashi et al.
D375,326 S 11/1996 Yokoi et al.
5,573,011 A 11/1996 Felsing
5,574,479 A 11/1996 Odell
5,579,025 A 11/1996 Itoh
D376,826 S 12/1996 Ashida
5,580,319 A 12/1996 Hamilton
5,581,484 A 12/1996 Prince
5,585,584 A 12/1996 Usa
5,586,767 A 12/1996 Bohland
5,587,558 A 12/1996 Matsushima
5,587,740 A 12/1996 Brennan
5,594,465 A 1/1997 Poulachon
5,598,187 A 1/1997 Ide et al.
5,602,569 A 2/1997 Kato
5,603,658 A 2/1997 Cohen
5,605,505 A 2/1997 Han
5,606,343 A 2/1997 Tsuboyama
5,611,731 A 3/1997 Bouton et al.
5,613,913 A 3/1997 Ikematsu et al.
5,615,132 A 3/1997 Horton
5,621,459 A 4/1997 Ueda
5,623,581 A 4/1997 Attenberg
5,624,117 A 4/1997 Ohkubo et al.
5,627,565 A 5/1997 Morishita et al.
5,629,981 A 5/1997 Nerlikar
5,632,878 A 5/1997 Kitano
D379,832 S 6/1997 Ashida
5,636,994 A 6/1997 Tong
5,640,152 A 6/1997 Copper
5,641,288 A 6/1997 Zzenglein, Jr.
5,642,931 A 7/1997 Gappelberg
5,643,087 A 7/1997 Marcus et al.
5,645,077 A 7/1997 Foxlin
5,645,277 A 7/1997 Cheng
5,647,796 A 7/1997 Cohen
5,649,867 A 7/1997 Briggs
5,651,049 A 7/1997 Easterling et al.
5,655,053 A 8/1997 Renie
5,662,332 A 9/1997 Garfield
5,662,525 A 9/1997 Briggs
5,666,138 A 9/1997 Culver
5,667,217 A 9/1997 Kelly et al.
5,667,220 A 9/1997 Cheng
5,670,845 A 9/1997 Grant
5,670,988 A 9/1997 Tickle
5,672,090 A 9/1997 Liu
5,674,128 A 10/1997 Holch et al.
5,676,450 A 10/1997 Sink et al.
5,676,673 A 10/1997 Ferre et al.
5,679,004 A 10/1997 McGowan et al.
5,682,181 A 10/1997 Nguyen et al.
5,685,776 A 11/1997 Stambolic et al.
5,685,778 A 11/1997 Sheldon et al.
5,694,340 A 12/1997 Kim
5,698,784 A 12/1997 Hotelling et al.
5,701,131 A 12/1997 Kuga
5,702,232 A 12/1997 Moore
5,702,305 A 12/1997 Norman et al.
5,702,323 A 12/1997 Poulton
5,703,623 A 12/1997 Hall et al.
5,716,216 A 2/1998 O'Loughlin et al.
5,716,281 A 2/1998 Dote
5,724,106 A 3/1998 Autry et al.
5,724,497 A 3/1998 San et al.
5,726,675 A 3/1998 Inoue
5,733,131 A 3/1998 Park
5,734,371 A 3/1998 Kaplan
5,734,373 A 3/1998 Rosenberg
5,734,807 A 3/1998 Sumi
D393,884 S 4/1998 Hayami
5,736,970 A 4/1998 Bozeman
5,739,811 A 4/1998 Rosenberg et al.
5,741,182 A 4/1998 Lipps et al.
5,741,189 A 4/1998 Briggs
5,742,233 A 4/1998 Hoffman et al.
5,742,331 A 4/1998 Uomori
5,745,226 A 4/1998 Gigioli
D394,264 S 5/1998 Sakamoto et al.
5,746,602 A 5/1998 Kikinis
5,751,273 A 5/1998 Cohen
5,752,880 A 5/1998 Gabai et al.
5,752,882 A 5/1998 Acres et al.
5,757,305 A 5/1998 Xydis
5,757,354 A 5/1998 Kawamura
5,757,360 A 5/1998 Nitta et al.
D395,464 S 6/1998 Shiibashi et al.
5,764,224 A 6/1998 Lilja et al.
5,766,077 A 6/1998 Hongo
5,769,719 A 6/1998 Hsu
5,770,533 A 6/1998 Franchi
5,771,038 A 6/1998 Wang
5,772,508 A 6/1998 Sugita et al.
D396,468 S 7/1998 Schindler et al.
5,775,998 A 7/1998 Ikematsu et al.
5,779,240 A 7/1998 Santella
5,785,317 A 7/1998 Sasaki
5,785,592 A 7/1998 Jacobsen
5,785,952 A 7/1998 Taylor et al.
5,786,626 A 7/1998 Brady et al.
D397,162 S 8/1998 Yokoi et al.
5,791,648 A 8/1998 Hohl
5,794,081 A 8/1998 Itoh
5,796,354 A 8/1998 Cartabiano et al.
5,803,740 A 9/1998 Gesink et al.
5,803,840 A 9/1998 Young
5,806,849 A 9/1998 Rutkowski
5,807,284 A 9/1998 Foxlin
5,810,666 A 9/1998 Mero et al.
5,811,896 A 9/1998 Grad
5,819,206 A 10/1998 Horton et al.
5,820,462 A 10/1998 Yokoi et al.
5,820,471 A 10/1998 Briggs
5,820,472 A 10/1998 Briggs
5,822,713 A 10/1998 Profeta
5,825,298 A 10/1998 Walter
5,825,350 A 10/1998 Case, Jr. et al.
D400,885 S 11/1998 Goto
5,830,065 A 11/1998 Sitrick
5,831,553 A 11/1998 Lenssen et al.
5,833,549 A 11/1998 Zur et al.
5,835,077 A 11/1998 Dao et al.
5,835,156 A 11/1998 Blonstein et al.
5,835,576 A 11/1998 Katz
5,836,817 A 11/1998 Acres et al.
5,838,138 A 11/1998 Henty
5,841,409 A 11/1998 Ishibashi et al.
D402,328 S 12/1998 Ashida
5,847,854 A 12/1998 Benson, Jr.
5,850,624 A 12/1998 Gard
5,851,149 A 12/1998 Xidos et al.
5,853,327 A 12/1998 Gilboa
5,853,332 A 12/1998 Briggs
5,854,622 A 12/1998 Brannon
5,855,483 A 1/1999 Collins et al.
D405,071 S 2/1999 Gambaro
5,865,680 A 2/1999 Briggs
5,867,146 A 2/1999 Kim et al.
5,874,941 A 2/1999 Yamada
5,875,257 A 2/1999 Marrin et al.
D407,071 S 3/1999 Keating
D407,761 S 4/1999 Barr
5,893,562 A 4/1999 Spector
5,897,437 A 4/1999 Nishiumi
5,898,421 A 4/1999 Quinn
5,900,867 A 5/1999 Schindler et al.
5,901,246 A 5/1999 Hoffberg et al.
5,902,968 A 5/1999 Sato et al.
5,906,542 A 5/1999 Neumann
D410,909 S 6/1999 Tickle
5,908,996 A 6/1999 Litterst et al.
5,911,634 A 6/1999 Nidata et al.
5,912,612 A 6/1999 DeVolpi

(56) **References Cited**

U.S. PATENT DOCUMENTS

5,913,019	A	6/1999	Attenberg
5,913,727	A	6/1999	Ahdoot
5,919,149	A	7/1999	Allen
5,923,317	A	7/1999	Sayler et al.
5,924,695	A	7/1999	Heykoop
5,926,780	A	7/1999	Fox et al.
5,929,782	A	7/1999	Stark et al.
5,929,841	A	7/1999	Fujii
5,929,848	A	7/1999	Albukerk et al.
D412,940	S	8/1999	Kato et al.
5,931,739	A	8/1999	Layer et al.
5,942,969	A	8/1999	Wicks
5,944,533	A	8/1999	Wood
5,946,444	A	8/1999	Evans et al.
5,947,789	A	9/1999	Chan
5,947,868	A	9/1999	Dugan
5,955,713	A	9/1999	Titus
5,955,988	A	9/1999	Blonstein
5,956,035	A	9/1999	Sciammarella
5,957,779	A	9/1999	Larson
5,961,386	A	10/1999	Sawaguchi
5,963,136	A	10/1999	O'Brien
5,964,660	A	10/1999	James et al.
5,967,898	A	10/1999	Takasaka et al.
5,967,901	A	10/1999	Briggs
5,971,270	A	10/1999	Barna
5,971,271	A	10/1999	Wynn et al.
5,973,757	A	10/1999	Aubuchon et al.
5,977,951	A	11/1999	Danieli et al.
5,980,254	A	11/1999	Muehle et al.
5,982,352	A	11/1999	Pryor
5,982,356	A	11/1999	Akiyama
5,984,785	A	11/1999	Takeda et al.
5,984,788	A	11/1999	Lebensfeld et al.
5,986,570	A	11/1999	Black et al.
5,986,644	A	11/1999	Herder
5,987,421	A	11/1999	Chuang
5,989,120	A	11/1999	Truchsess
5,991,085	A	11/1999	Rallison et al.
5,991,693	A	11/1999	Zalewski
5,996,033	A	11/1999	Chiu-Hao
5,999,168	A	12/1999	Rosenberg
6,001,014	A	12/1999	Ogata
6,001,015	A	12/1999	Nishiumi et al.
6,002,394	A	12/1999	Schein
6,009,458	A	12/1999	Hawkins et al.
D419,199	S	1/2000	Cordell et al.
D419,200	S	1/2000	Ashida
6,010,406	A	1/2000	Kajikawa et al.
6,011,526	A	1/2000	Toyoshima et al.
6,012,980	A	1/2000	Yoshida et al.
6,012,984	A	1/2000	Roseman
6,013,007	A	1/2000	Root et al.
6,016,144	A	1/2000	Blonstein
6,019,680	A	2/2000	Cheng
6,020,876	A	2/2000	Rosenberg
6,024,647	A	2/2000	Bennett et al.
6,024,675	A	2/2000	Kashiwaguchi
6,025,830	A	2/2000	Cohen
6,037,882	A	3/2000	Levy
6,044,297	A	3/2000	Sheldon
6,049,823	A	4/2000	Hwang
6,052,083	A	4/2000	Wilson
6,057,788	A	5/2000	Cummings
6,058,342	A	5/2000	Orbach
6,059,576	A	5/2000	Brann
6,060,847	A	5/2000	Hettema et al.
6,066,075	A	5/2000	Poulton
6,069,594	A	5/2000	Barnes et al.
6,072,467	A	6/2000	Walker
6,072,470	A	6/2000	Ishigaki
6,075,443	A	6/2000	Schepps et al.
6,075,575	A	6/2000	Schein et al.
6,076,734	A	6/2000	Dougherty et al.
6,077,106	A	6/2000	Mish
6,078,789	A	6/2000	Bodenmann
6,079,982	A	6/2000	Meader
6,080,063	A	6/2000	Khosla
6,081,819	A	6/2000	Ogino
6,084,315	A	7/2000	Schmitt
6,084,577	A	7/2000	Sato et al.
6,085,805	A	7/2000	Bates
6,087,950	A	7/2000	Capan
6,089,987	A	7/2000	Briggs
6,091,342	A	7/2000	Janesch et al.
D429,718	S	8/2000	Rudolph
6,095,926	A	8/2000	Hettema et al.
6,102,406	A	8/2000	Miles et al.
6,110,000	A	8/2000	Ting
6,110,039	A	8/2000	Oh
6,110,041	A	8/2000	Walker et al.
6,115,028	A	9/2000	Balakrishnan
6,127,928	A	10/2000	Issacman et al.
6,127,990	A	10/2000	Zwern
6,129,549	A	10/2000	Thompson
6,132,318	A	10/2000	Briggs
6,137,457	A	10/2000	Tokuhashi
D433,381	S	11/2000	Talesfore
6,142,870	A	11/2000	Wada
6,142,876	A	11/2000	Cumbers
6,144,367	A	11/2000	Berstis
6,146,278	A	11/2000	Kobayashi
6,148,100	A	11/2000	Anderson et al.
6,149,490	A	11/2000	Hampton
6,150,947	A	11/2000	Shima
6,154,723	A	11/2000	Cox et al.
6,155,926	A	12/2000	Miyamoto et al.
6,160,405	A	12/2000	Needle
6,160,540	A	12/2000	Fishkin et al.
6,160,986	A	12/2000	Gabai et al.
6,162,122	A	12/2000	Acres et al.
6,162,123	A	12/2000	Woolston
6,162,191	A	12/2000	Foxin
6,164,808	A	12/2000	Shibata
6,171,190	B1	1/2001	Thanasack et al.
6,174,242	B1	1/2001	Briggs et al.
6,176,837	B1	1/2001	Foxlin
6,181,253	B1	1/2001	Eschenbach et al.
6,181,329	B1	1/2001	Stork et al.
6,183,364	B1	2/2001	Trovato
6,183,365	B1	2/2001	Tonomura et al.
6,184,847	B1	2/2001	Fateh et al.
6,184,862	B1	2/2001	Leiper
6,184,863	B1	2/2001	Sibert
6,186,902	B1	2/2001	Briggs
6,190,174	B1	2/2001	Lam
6,191,774	B1	2/2001	Schena
6,196,893	B1	3/2001	Casola et al.
6,198,295	B1	3/2001	Hill
6,198,470	B1	3/2001	Agam et al.
6,198,471	B1	3/2001	Cook
6,200,216	B1	3/2001	Peppel
6,200,219	B1	3/2001	Rudell et al.
6,200,253	B1	3/2001	Nishiumi
6,201,554	B1	3/2001	Lands
6,206,745	B1	3/2001	Gabai et al.
6,206,782	B1	3/2001	Walker et al.
6,210,287	B1	4/2001	Briggs
6,211,861	B1	4/2001	Rosenberg et al.
6,214,155	B1	4/2001	Leighton
6,217,450	B1	4/2001	Meredith
6,217,478	B1	4/2001	Vohmann
6,220,171	B1	4/2001	Hettema et al.
6,220,964	B1	4/2001	Miyamoto
6,220,965	B1	4/2001	Hanna et al.
6,222,522	B1	4/2001	Mathews
D442,998	S	5/2001	Ashida
6,224,486	B1	5/2001	Walker et al.
6,224,491	B1	5/2001	Hiromi et al.
6,225,987	B1	5/2001	Matsuda
6,226,534	B1	5/2001	Aizawa
6,227,966	B1	5/2001	Yokoi
6,227,974	B1	5/2001	Eilat et al.
6,231,451	B1	5/2001	Briggs

(56) **References Cited**

U.S. PATENT DOCUMENTS

6,234,803	B1	5/2001	Watkins
6,238,289	B1	5/2001	Sobota et al.
6,238,291	B1	5/2001	Fujimoto et al.
6,239,806	B1	5/2001	Nishiumi et al.
RE37,220	E	6/2001	Rapisarda et al.
6,241,611	B1	6/2001	Takeda et al.
6,243,491	B1	6/2001	Andersson
6,243,658	B1	6/2001	Raby
6,244,987	B1	6/2001	Ohsuga et al.
6,245,014	B1	6/2001	Brainard et al.
6,248,019	B1	6/2001	Mudie et al.
6,254,101	B1	7/2001	Young
6,254,394	B1	7/2001	Draper et al.
6,261,180	B1	7/2001	Lebensfeld et al.
6,264,202	B1	7/2001	Briggs
6,264,558	B1	7/2001	Nishiumi et al.
6,265,984	B1	7/2001	Molinaroli
6,267,673	B1	7/2001	Miyamoto et al.
6,273,425	B1	8/2001	Westfall et al.
6,273,819	B1	8/2001	Strauss et al.
6,276,353	B1	8/2001	Briggs et al.
6,280,327	B1	8/2001	Leifer et al.
6,280,328	B1	8/2001	Holch et al.
6,283,862	B1	9/2001	Richter
6,283,871	B1	9/2001	Briggs
6,287,200	B1	9/2001	Sharma
6,290,565	B1	9/2001	Galyean, III et al.
6,290,566	B1	9/2001	Gabai et al.
6,293,684	B1	9/2001	Riblett
6,297,751	B1	10/2001	Fadavi-Ardekani
6,301,534	B1	10/2001	McDermott
6,302,793	B1	10/2001	Fertitta, III et al.
6,302,796	B1	10/2001	Lebensfeld et al.
6,304,250	B1	10/2001	Yang
6,311,982	B1	11/2001	Lebensfeld et al.
6,312,335	B1	11/2001	Tosaki et al.
6,315,673	B1	11/2001	Kopera
6,320,495	B1	11/2001	Sporgis
6,322,365	B1	11/2001	Shechter et al.
6,323,614	B1	11/2001	Palaxxolo
6,323,654	B1	11/2001	Needle
6,325,718	B1	12/2001	Nishiumi et al.
6,328,648	B1	12/2001	Walker et al.
6,328,650	B1	12/2001	Fukawa et al.
6,329,648	B1	12/2001	Delatorre
6,330,427	B1	12/2001	Tabachnik
6,331,841	B1	12/2001	Tokuhashi
6,331,856	B1	12/2001	VanHook
6,332,840	B1	12/2001	Nishiumi et al.
6,337,954	B1	1/2002	Soshi
6,342,010	B1	1/2002	Slifer
6,346,047	B1	2/2002	Sobota
6,347,993	B1	2/2002	Kondo et al.
6,347,998	B1	2/2002	Yoshitomi et al.
6,350,199	B1	2/2002	Williams et al.
6,352,478	B1	3/2002	Gabai et al.
6,356,867	B1	3/2002	Gabai et al.
6,361,396	B1	3/2002	Snyder
6,361,507	B1	3/2002	Foxlin
D456,410	S	4/2002	Ashida
6,364,735	B1	4/2002	Bristow et al.
6,368,177	B1	4/2002	Gabai et al.
6,368,217	B2	4/2002	Kanno
6,369,794	B1	4/2002	Sakurai et al.
6,369,908	B1	4/2002	Frey et al.
6,371,375	B1	4/2002	Ackley et al.
6,371,853	B1	4/2002	Borta
6,375,566	B1	4/2002	Yamada
6,375,569	B1	4/2002	Acres
6,375,572	B1	4/2002	Masuyama et al.
6,375,578	B1	4/2002	Briggs
6,377,793	B1	4/2002	Jenkins
6,377,906	B1	4/2002	Rowe
D456,854	S	5/2002	Ashida
6,383,079	B1	5/2002	Takeda et al.
6,386,538	B1	5/2002	Mejia
6,392,613	B1	5/2002	Goto
6,394,904	B1	5/2002	Stalker
6,400,480	B1	6/2002	Thomas
6,400,996	B1	6/2002	Hoffberg et al.
6,404,409	B1	6/2002	Solomon
6,409,379	B1	6/2002	Gabathuler et al.
6,409,604	B1	6/2002	Matsuno
6,409,687	B1	6/2002	Foxlin
D459,727	S	7/2002	Ashida
D460,787	S	7/2002	Nishikawa
6,414,589	B1	7/2002	Angott et al.
6,415,223	B1	7/2002	Lin
6,421,056	B1	7/2002	Nishiumi
6,424,264	B1	7/2002	Giraldin et al.
6,424,333	B1	7/2002	Tremblay
6,426,719	B1	7/2002	Nagareda
6,426,741	B1	7/2002	Goldsmith et al.
6,438,193	B1	8/2002	Ko et al.
D462,683	S	9/2002	Ashida
6,445,960	B1	9/2002	Borta
6,452,494	B1	9/2002	Harrison
6,456,276	B1	9/2002	Park
D464,052	S	10/2002	Fletcher
D464,950	S	10/2002	Fraquelli et al.
6,462,769	B1	10/2002	Trowbridge et al.
6,463,257	B1	10/2002	Wood
6,463,859	B1	10/2002	Ikezawa et al.
6,466,198	B1	10/2002	Feinstein
6,466,831	B1	10/2002	Shibata
6,473,070	B2	10/2002	Mishra et al.
6,473,713	B1	10/2002	McCall
6,474,159	B1	11/2002	Foxlin et al.
6,482,067	B1	11/2002	Pickens
6,484,080	B2	11/2002	Breed
6,490,409	B1	12/2002	Walker
6,491,566	B2	12/2002	Peters et al.
6,492,981	B1	12/2002	Stork et al.
6,494,457	B2	12/2002	Conte et al.
6,496,122	B2	12/2002	Sampsell
6,509,217	B1	1/2003	Reddy
6,512,511	B2	1/2003	Willner
6,517,438	B2	2/2003	Tosaki
6,518,952	B1	2/2003	Leiper
6,525,660	B1	2/2003	Surintrspanont
6,526,158	B1	2/2003	Goldberg
6,527,638	B1	3/2003	Walker et al.
6,527,646	B1	3/2003	Briggs
6,530,838	B2	3/2003	Ha et al.
6,530,841	B2	3/2003	Bull et al.
6,538,675	B2	3/2003	Aratani
D473,942	S	4/2003	Motoki et al.
6,540,607	B2	4/2003	Mokris et al.
6,540,611	B1	4/2003	Nagata
6,544,124	B2	4/2003	Ireland
6,544,126	B2	4/2003	Sawano
6,545,611	B2	4/2003	Hayashi et al.
6,545,661	B1	4/2003	Goschy et al.
6,551,165	B2	4/2003	Smirnov
6,551,188	B2	4/2003	Toyama et al.
6,554,707	B1	4/2003	Sinclair et al.
6,554,781	B1	4/2003	Carter et al.
D474,763	S	5/2003	Tozaki et al.
6,558,225	B1	5/2003	Rehkemper et al.
6,560,511	B1	5/2003	Yokoo et al.
6,561,049	B2	5/2003	Akiyama et al.
6,565,438	B2	5/2003	Ogino
6,565,444	B2	5/2003	Nagata et al.
6,567,536	B2	5/2003	McNitt et al.
6,569,023	B1	5/2003	Briggs
6,572,108	B1	6/2003	Bristow
6,575,753	B2	6/2003	Rosa et al.
6,577,350	B1	6/2003	Proehl
6,579,098	B2	6/2003	Shechter
6,582,299	B1	6/2003	Matsuyama et al.
6,582,380	B2	6/2003	Kazlausky et al.
6,583,783	B1	6/2003	Dietrich
6,585,596	B1	7/2003	Liefer et al.
6,589,120	B1	7/2003	Takahashi

(56) **References Cited**

U.S. PATENT DOCUMENTS

6,590,536 B1 7/2003 Walton
6,591,677 B2 7/2003 Rothoff
6,592,461 B1 7/2003 Raviv et al.
6,595,863 B2 7/2003 Chamberlain et al.
6,597,342 B1 7/2003 Haruta
6,597,443 B2 7/2003 Boman
6,598,978 B2 7/2003 Hasegawa
6,599,194 B1 7/2003 Smith
6,605,038 B1 8/2003 Teller et al.
6,607,123 B1 8/2003 Jollifee et al.
6,608,563 B2 8/2003 Weston et al.
6,609,969 B1 8/2003 Luciano et al.
6,609,977 B1 8/2003 Shimizu
6,616,452 B2 9/2003 Clark et al.
6,616,535 B1 9/2003 Nishizak
6,616,607 B2 9/2003 Hashimoto
6,626,728 B2 9/2003 Holt
6,628,257 B1 9/2003 Oka
6,629,019 B2 9/2003 Legge et al.
6,632,142 B2 10/2003 Keith
6,633,155 B1 10/2003 Liang
6,634,949 B1 10/2003 Briggs et al.
6,636,826 B1 10/2003 Abe et al.
6,641,482 B2 11/2003 Masuyama et al.
6,642,837 B1 11/2003 Vigoda et al.
6,650,029 B1 11/2003 Johnston
6,650,313 B2 11/2003 Levine
6,650,345 B1 11/2003 Saito
6,651,268 B1 11/2003 Briggs
6,654,001 B1 11/2003 Su
6,672,962 B1 1/2004 Ozaki et al.
6,676,520 B2 1/2004 Nishiumi et al.
6,676,524 B1 1/2004 Botzas
6,677,990 B1 1/2004 Kawahara
6,681,629 B2 1/2004 Foxlin et al.
6,682,074 B2 1/2004 Weston
6,682,351 B1 1/2004 Abraham-Fuchs et al.
6,684,062 B1 1/2004 Gosior et al.
D486,145 S 2/2004 Kaminski et al.
6,686,954 B1 2/2004 Kitaguchi
6,692,170 B2 2/2004 Abir
6,693,622 B1 2/2004 Shahoian et al.
6,702,672 B1 3/2004 Angell et al.
6,709,336 B2 3/2004 Siegel et al.
6,712,692 B2 3/2004 Basson
6,716,102 B2 4/2004 Whitten et al.
6,717,573 B1 4/2004 Shahoian et al.
6,717,673 B1 4/2004 Janssen
6,718,280 B2 4/2004 Hermann
6,725,107 B2 4/2004 MacPherson
6,725,173 B2 4/2004 An
6,726,099 B2 4/2004 Becker et al.
D489,361 S 5/2004 Mori et al.
6,729,934 B1 5/2004 Driscoll et al.
6,733,390 B2 5/2004 Walker et al.
6,736,009 B1 5/2004 Schwabe
6,739,874 B2 5/2004 Marcus et al.
6,739,979 B2 5/2004 Tracy
D491,924 S 6/2004 Kaminski et al.
D492,285 S 6/2004 Ombao et al.
6,743,104 B1 6/2004 Ota et al.
6,746,334 B1 6/2004 Barney
6,747,562 B2 6/2004 Giraldin et al.
6,747,632 B2 6/2004 Howard
6,747,690 B2 6/2004 Molgaard
6,749,432 B2 6/2004 French et al.
6,752,719 B2 6/2004 Himoto et al.
6,753,849 B1 6/2004 Curran et al.
6,753,888 B2 6/2004 Kamiwada
6,757,068 B2 6/2004 Foxlin
6,757,446 B1 6/2004 Li
6,761,637 B2 7/2004 Weston et al.
6,765,553 B1 7/2004 Odamura
D495,336 S 8/2004 Andre et al.
6,770,863 B2 8/2004 Walley
6,773,325 B1 8/2004 Mawle et al.
6,773,344 B1 8/2004 Gabai et al.
6,785,539 B2 8/2004 Hale
6,786,877 B2 9/2004 Foxlin
6,796,177 B2 9/2004 Mori
6,796,908 B2 9/2004 Weston
6,797,895 B2 9/2004 Lapstun
6,811,489 B1 11/2004 Shimizu
6,811,491 B1 11/2004 Levenberg et al.
6,812,583 B2 11/2004 Cheung et al.
6,812,881 B1 11/2004 Mullaly et al.
6,813,525 B2 11/2004 Reid
6,813,574 B1 11/2004 Yedur
6,813,584 B2 11/2004 Zhou et al.
6,816,151 B2 11/2004 Dellinger
6,821,204 B2 11/2004 Aonuma et al.
6,821,206 B1 11/2004 Ishida et al.
6,835,135 B1 12/2004 Silverbrook et al.
6,836,705 B2 12/2004 Hellman
6,836,751 B2 12/2004 Paxton
6,836,971 B1 1/2005 Wang
6,842,991 B2 1/2005 Levi
6,846,238 B2 1/2005 Wells
6,850,221 B1 2/2005 Tickle
6,850,844 B1 2/2005 Walters
6,852,032 B2 2/2005 Ishino
6,856,327 B2 2/2005 Choi
D502,468 S 3/2005 Knight et al.
6,868,738 B2 3/2005 Moscrip
6,872,139 B2 3/2005 Sato et al.
6,873,406 B1 3/2005 Hines
D503,750 S 4/2005 Kit et al.
6,878,066 B2 4/2005 Leifer
6,882,824 B2 4/2005 Wood
D504,677 S 5/2005 Kaminski et al.
D505,424 S 5/2005 Ashida et al.
6,890,262 B2 5/2005 Oishi
6,891,469 B2 5/2005 Engellenner et al.
6,891,526 B2 5/2005 Gombert
6,894,686 B2 5/2005 Stamper et al.
6,897,845 B2 5/2005 Ozawa
6,897,854 B2 5/2005 Cho
6,902,483 B2 6/2005 Lin
6,903,725 B2 6/2005 Nacson
6,905,411 B2 6/2005 Nguyen et al.
6,906,700 B1 6/2005 Armstrong
6,908,386 B2 6/2005 Suzuki et al.
6,908,388 B2 6/2005 Shimizu
6,918,833 B2 7/2005 Emmerson et al.
6,921,332 B2 7/2005 Fukunaga
6,922,632 B2 7/2005 Foxlin
6,924,787 B2 8/2005 Kramer et al.
6,925,410 B2 8/2005 Narayanan
6,929,543 B1 8/2005 Ueshima et al.
6,929,548 B2 8/2005 Wang
6,932,698 B2 8/2005 Sprogis
6,932,706 B1 8/2005 Kaminkow
6,933,861 B2 8/2005 Wang
6,933,923 B2 8/2005 Feinstein
6,935,864 B2 8/2005 Shechter et al.
6,935,952 B2 8/2005 Walker et al.
6,939,232 B2 9/2005 Tanaka et al.
6,948,999 B2 9/2005 Chan
6,954,980 B2 10/2005 Song
6,955,606 B2 10/2005 Taho et al.
6,956,564 B1 10/2005 Williams
6,965,374 B2 11/2005 Villet et al.
6,966,775 B1 11/2005 Kendir et al.
6,967,563 B2 11/2005 Bormaster
6,967,566 B2 11/2005 Weston et al.
6,982,697 B2 1/2006 Wilson et al.
6,983,219 B2 1/2006 Mantyjarvi
6,984,208 B2 1/2006 Zheng
6,990,639 B2 1/2006 Wilson
6,993,451 B2 1/2006 Chang et al.
6,995,748 B2 2/2006 Gordon et al.
6,998,966 B2 2/2006 Pedersen
7,000,469 B2 2/2006 Foxlin et al.
7,002,591 B1 2/2006 Leather

(56) **References Cited**

U.S. PATENT DOCUMENTS

7,004,847 B2 2/2006 Henry
7,005,985 B1 2/2006 Steeves
7,029,400 B2 4/2006 Briggs
7,031,875 B2 4/2006 Ellenby et al.
7,038,661 B2 5/2006 Wilson et al.
7,040,986 B2 5/2006 Koshima
7,040,993 B1 5/2006 Lovitt
7,040,998 B2 5/2006 Jolliffe et al.
7,052,391 B1 5/2006 Luciano, Jr.
7,055,101 B2 5/2006 Abbott et al.
7,056,221 B2 6/2006 Thirkettle et al.
7,059,974 B1 6/2006 Golliffe et al.
7,066,781 B2 6/2006 Weston
D524,298 S 7/2006 Hedderich et al.
7,081,033 B1 7/2006 Mawle
7,081,051 B2 7/2006 Himoto et al.
7,086,645 B2 8/2006 Hardie
7,090,582 B2 8/2006 Danieli et al.
7,094,147 B2 8/2006 Nakata
7,098,891 B1 8/2006 Pryor
7,098,894 B2 8/2006 Yang
7,102,615 B2 9/2006 Marks
7,102,616 B1 9/2006 Sleator
7,107,168 B2 9/2006 Oystol
D531,228 S 10/2006 Ashida et al.
7,115,032 B2 10/2006 Cantu et al.
7,117,009 B2 10/2006 Wong et al.
7,118,482 B2 10/2006 Ishihara et al.
7,126,584 B1 10/2006 Nishiumi et al.
7,127,370 B2 10/2006 Kelly
D531,585 S 11/2006 Weitgasser et al.
7,133,026 B2 11/2006 Horie et al.
7,136,674 B2 11/2006 Yoshie et al.
7,136,826 B2 11/2006 Alsafadi
7,137,899 B2 11/2006 Hiei
7,139,983 B2 11/2006 Kelts
7,140,962 B2 11/2006 Okuda et al.
7,142,191 B2 11/2006 Idesawa et al.
7,145,551 B1 12/2006 Bathiche
7,149,627 B2 12/2006 Ockerse
7,154,475 B2 12/2006 Crew
7,155,604 B2 12/2006 Kawai
7,158,116 B2 1/2007 Poltorak
7,158,118 B2 1/2007 Liberty
7,160,196 B2 1/2007 Thirkettle et al.
7,168,089 B2 1/2007 Nguyen et al.
7,173,604 B2 2/2007 Marvit
7,176,919 B2 2/2007 Drebin
7,180,414 B2 2/2007 Nyfelt
7,180,503 B2 2/2007 Burr
7,182,691 B1 2/2007 Schena
7,183,480 B2 2/2007 Nishitani et al.
7,184,059 B1 2/2007 Fouladi
D543,246 S 5/2007 Ashida et al.
7,220,220 B2 5/2007 Stubbs et al.
7,223,173 B2 5/2007 Masuyama et al.
7,225,101 B2 5/2007 Usuda et al.
7,231,063 B2 6/2007 Naimark
7,233,316 B2 6/2007 Smith et al.
7,236,156 B2 6/2007 Liberty et al.
7,239,301 B2 7/2007 Liberty et al.
7,252,572 B2 8/2007 Wright et al.
7,253,800 B2 8/2007 Goldberg et al.
7,261,690 B2 8/2007 Teller et al.
7,262,760 B2 8/2007 Liberty
RE39,818 E 9/2007 Slifer
7,288,028 B2 10/2007 Rodriguez et al.
D556,201 S 11/2007 Ashida et al.
7,291,014 B2 11/2007 Chung et al.
7,292,151 B2 11/2007 Ferguson et al.
7,297,059 B2 11/2007 Vancura et al.
7,301,527 B2 11/2007 Marvit
7,301,648 B2 11/2007 Foxlin
D556,760 S 12/2007 Ashida et al.
7,307,617 B2 12/2007 Wilson et al.
D559,847 S 1/2008 Ashida et al.
D561,178 S 2/2008 Azuma
7,331,857 B2 2/2008 MacIver
7,335,134 B1 2/2008 LaVelle
D563,948 S 3/2008 d'Hoore
7,337,965 B2 3/2008 Thirkettle et al.
7,339,105 B2 3/2008 Eitaki
7,345,670 B2 3/2008 Armstrong
D567,243 S 4/2008 Ashida et al.
7,359,121 B2 4/2008 French et al.
7,359,451 B2 4/2008 McKnight
7,361,073 B2 4/2008 Martin
RE40,324 E 5/2008 Crawford
7,371,177 B2 5/2008 Ellis et al.
7,379,566 B2 5/2008 Hildreth
7,387,559 B2 6/2008 Sanchez-Castro et al.
7,394,459 B2 7/2008 Bathiche et al.
7,395,181 B2 7/2008 Foxlin
7,398,151 B1 7/2008 Burrell et al.
7,408,453 B2 8/2008 Breed
7,414,611 B2 8/2008 Liberty
7,419,428 B2 9/2008 Rowe
7,424,388 B2 9/2008 Sato
7,428,499 B1 9/2008 Philyaw
7,435,179 B1 10/2008 Ford
7,441,151 B2 10/2008 Whitten et al.
7,442,108 B2 10/2008 Ganz
7,445,550 B2 11/2008 Barney et al.
7,465,212 B2 12/2008 Ganz
7,488,231 B2 2/2009 Weston
7,488,254 B2 2/2009 Himoto
7,489,299 B2 2/2009 Liberty et al.
7,492,268 B2 2/2009 Ferguson et al.
7,492,367 B2 2/2009 Mahajan et al.
7,500,917 B2 3/2009 Barney et al.
7,502,759 B2 3/2009 Hannigan et al.
7,519,537 B2 4/2009 Rosenberg
7,524,246 B2 4/2009 Briggs et al.
7,535,456 B2 5/2009 Liberty et al.
7,536,156 B2 5/2009 Tischer
7,556,563 B2 7/2009 Ellis et al.
7,564,426 B2 7/2009 Poor
7,568,289 B2 8/2009 Burlingham et al.
7,572,191 B2 8/2009 Weston et al.
7,582,016 B2 9/2009 Suzuki
7,596,466 B2 9/2009 Ohta
7,614,958 B2 11/2009 Weston et al.
7,623,115 B2 11/2009 Marks
7,627,139 B2 12/2009 Marks
7,627,451 B2 12/2009 Vock et al.
7,645,178 B1 1/2010 Trotto et al.
7,662,015 B2 2/2010 Hui
7,663,509 B2 2/2010 Shen
7,674,184 B2 3/2010 Briggs et al.
7,704,135 B2 4/2010 Harrison
7,704,146 B2 4/2010 Ellis
7,727,090 B2 6/2010 Gant
7,749,089 B1 7/2010 Briggs et al.
7,774,155 B2 8/2010 Sato et al.
7,775,882 B2 8/2010 Kawamura et al.
7,775,884 B1 8/2010 McCauley
7,789,741 B1 9/2010 Fields
7,796,116 B2 9/2010 Salsman et al.
7,828,295 B2 11/2010 Matsumoto et al.
7,850,527 B2 12/2010 Barney et al.
7,878,905 B2 2/2011 Weston et al.
7,883,420 B2 2/2011 Bradbury
7,896,742 B2 3/2011 Weston et al.
7,927,216 B2 4/2011 Ikeda
7,942,745 B2 5/2011 Ikeda
7,989,971 B2 8/2011 Lemieux
8,021,239 B2 9/2011 Weston et al.
8,025,573 B2 9/2011 Stenton et al.
8,033,901 B2 10/2011 Wood
8,089,458 B2 1/2012 Barney et al.
8,164,567 B1 4/2012 Barney et al.
8,169,406 B2 5/2012 Barney et al.
8,184,097 B1 5/2012 Barney et al.
8,206,223 B2 6/2012 Marans et al.

(56) **References Cited**

U.S. PATENT DOCUMENTS

8,226,493 B2 7/2012 Briggs et al.
8,248,367 B1 8/2012 Barney et al.
8,287,372 B2 10/2012 Hong et al.
8,287,373 B2 10/2012 Marks et al.
8,330,284 B2 12/2012 Weston et al.
8,342,929 B2 1/2013 Briggs et al.
8,368,648 B2 2/2013 Barney et al.
8,373,659 B2 2/2013 Barney et al.
8,384,668 B2 2/2013 Barney et al.
8,439,757 B2 5/2013 Hornsby et al.
8,469,766 B2 6/2013 Zheng
8,475,275 B2 7/2013 Weston et al.
8,491,389 B2 7/2013 Weston et al.
8,531,050 B2 9/2013 Barney et al.
8,535,153 B2 9/2013 Bradbury et al.
8,545,335 B2 10/2013 Fiegener et al.
8,550,916 B2 10/2013 Raynal
8,602,857 B2 12/2013 Morichau-Beauchant et al.
8,608,535 B2 12/2013 Weston et al.
8,686,579 B2 4/2014 Barney et al.
8,702,515 B2 4/2014 Weston et al.
8,708,821 B2 4/2014 Barney et al.
8,711,094 B2 4/2014 Barney et al.
8,753,165 B2 6/2014 Weston
8,758,136 B2 6/2014 Briggs et al.
8,790,180 B2 7/2014 Barney et al.
8,795,079 B2 8/2014 Penzias, III
8,814,688 B2 8/2014 Barney et al.
8,827,810 B2 9/2014 Weston et al.
8,834,271 B2 9/2014 Ikeda
8,870,655 B2 10/2014 Ikeda
8,888,576 B2 11/2014 Briggs et al.
8,894,462 B2 11/2014 Leyland et al.
8,913,011 B2 12/2014 Barney et al.
8,915,785 B2 12/2014 Barney et al.
8,961,260 B2 2/2015 Weston
8,961,312 B2 2/2015 Barney et al.
9,039,533 B2 5/2015 Barney et al.
9,138,650 B2 9/2015 Barney et al.
9,149,717 B2 10/2015 Barney et al.
9,162,148 B2 10/2015 Barney et al.
9,162,149 B2 10/2015 Weston et al.
9,180,378 B2 11/2015 Reiche
9,186,585 B2 11/2015 Briggs et al.
9,272,206 B2 3/2016 Weston et al.
9,320,976 B2 4/2016 Weston
2001/0010514 A1 8/2001 Ishino
2001/0015123 A1 8/2001 Nishitani et al.
2001/0018361 A1 8/2001 Acres
2001/0021950 A1 9/2001 Hawley
2001/0024973 A1 9/2001 Meredith
2001/0031652 A1 10/2001 Gabai et al.
2001/0031662 A1 10/2001 Larian
2001/0034257 A1 10/2001 Weston et al.
2001/0039206 A1 11/2001 Peppel
2001/0040591 A1 11/2001 Abbott et al.
2001/0049302 A1 12/2001 Hagiwara et al.
2001/0054082 A1 12/2001 Rudolph et al.
2002/0005787 A1 1/2002 Gabai et al.
2002/0024500 A1 2/2002 Howard
2002/0024675 A1 2/2002 Foxlin
2002/0028071 A1 3/2002 Molgaard
2002/0028710 A1 3/2002 Ishihara et al.
2002/0032067 A1 3/2002 Barney
2002/0036617 A1 3/2002 Pryor
2002/0038267 A1 3/2002 Can et al.
2002/0052238 A1 5/2002 Muroi
2002/0058459 A1 5/2002 Holt
2002/0068500 A1 6/2002 Gabai et al.
2002/0072418 A1 6/2002 Masuyama
2002/0075335 A1 6/2002 Relimoto
2002/0077180 A1 6/2002 Swanberg et al.
2002/0077182 A1 6/2002 Swanberg et al.
2002/0090985 A1 7/2002 Tochner et al.
2002/0090992 A1 7/2002 Legge et al.
2002/0098887 A1 7/2002 Himoto et al.
2002/0103026 A1 8/2002 Himoto et al.
2002/0107069 A1 8/2002 Ishino
2002/0107591 A1 8/2002 Gabai et al.
2002/0116615 A1 8/2002 Nguyen et al.
2002/0118147 A1 8/2002 Solomon
2002/0123377 A1 9/2002 Shulman
2002/0126026 A1 9/2002 Lee et al.
2002/0128056 A1 9/2002 Kato
2002/0137427 A1 9/2002 Peters
2002/0137567 A1 9/2002 Cheng
2002/0140745 A1 10/2002 Ellenby
2002/0158751 A1 10/2002 Bormaster
2002/0158843 A1 10/2002 Levine
2002/0183961 A1 12/2002 French et al.
2003/0001016 A1 1/2003 Fraier
2003/0013513 A1 1/2003 Rowe
2003/0022736 A1 1/2003 Cass
2003/0027634 A1 2/2003 Matthews, III
2003/0036425 A1 2/2003 Kaminkow et al.
2003/0037075 A1 2/2003 Hannigan
2003/0038778 A1 2/2003 Noguera
2003/0040347 A1 2/2003 Roach et al.
2003/0052860 A1 3/2003 Park et al.
2003/0057808 A1 3/2003 Lee et al.
2003/0060286 A1 3/2003 Walker et al.
2003/0063068 A1 4/2003 Anton
2003/0064812 A1 4/2003 Rappaport et al.
2003/0069077 A1 4/2003 Korienek
2003/0073505 A1 4/2003 Tracy
2003/0095101 A1 5/2003 Jou
2003/0096652 A1 5/2003 Siegel et al.
2003/0107551 A1 6/2003 Dunker
2003/0114233 A1 6/2003 Hiei
2003/0134679 A1 7/2003 Siegel et al.
2003/0144047 A1 7/2003 Sprogis
2003/0144056 A1 7/2003 Leifer et al.
2003/0149803 A1 8/2003 Wilson et al.
2003/0166416 A1 9/2003 Ogata
2003/0171145 A1 9/2003 Rowe
2003/0171190 A1 9/2003 Rice
2003/0190967 A1 10/2003 Henry
2003/0193572 A1 10/2003 Wilson et al.
2003/0195037 A1 10/2003 Vuong et al.
2003/0195041 A1 10/2003 McCauley
2003/0195046 A1 10/2003 Bartsch
2003/0204361 A1 10/2003 Townsend
2003/0214259 A9 11/2003 Dowling et al.
2003/0216176 A1 11/2003 Shimizu
2003/0222851 A1 12/2003 Lai
2003/0234914 A1 12/2003 Solomon
2004/0028258 A1 2/2004 Naimark
2004/0033833 A1 2/2004 Briggs et al.
2004/0034289 A1 2/2004 Teller et al.
2004/0043806 A1 3/2004 Kirby et al.
2004/0048666 A1 3/2004 Bagley
2004/0063480 A1 4/2004 Wang
2004/0070564 A1 4/2004 Dawson
2004/0075650 A1 4/2004 Paul
2004/0081313 A1 4/2004 McKnight et al.
2004/0095317 A1 5/2004 Zhang
2004/0102247 A1 5/2004 Smoot et al.
2004/0119693 A1 6/2004 Kaemmler
2004/0121834 A1 6/2004 Libby et al.
2004/0134341 A1 7/2004 Sandoz
2004/0140954 A1 7/2004 Faeth
2004/0143413 A1 7/2004 Oystol
2004/0147317 A1 7/2004 Ito et al.
2004/0152499 A1 8/2004 Lind et al.
2004/0152515 A1 8/2004 Wegmuller et al.
2004/0152520 A1 8/2004 Shinoda
2004/0174287 A1 9/2004 Deak
2004/0193413 A1 9/2004 Wilson
2004/0198158 A1 10/2004 Driscoll et al.
2004/0203638 A1 10/2004 Chan
2004/0207597 A1 10/2004 Marks
2004/0214642 A1 10/2004 Beck
2004/0218104 A1 11/2004 Smith
2004/0222969 A1 11/2004 Buchenrieder

(56) **References Cited**

U.S. PATENT DOCUMENTS

2004/0227725 A1 11/2004 Calarco
2004/0229693 A1 11/2004 Lind
2004/0229696 A1 11/2004 Beck
2004/0236453 A1 11/2004 Szoboszlay
2004/0239626 A1 12/2004 Noguera
2004/0252109 A1 12/2004 Trent et al.
2004/0254020 A1 12/2004 Dragusin
2004/0259651 A1 12/2004 Storek
2004/0268393 A1 12/2004 Hunleth
2005/0017454 A1 1/2005 Endo et al.
2005/0020369 A1 1/2005 Davis
2005/0032582 A1 2/2005 Mahajan et al.
2005/0047621 A1 3/2005 Cranfill
2005/0054457 A1 3/2005 Eyestone
2005/0059488 A1 3/2005 Larsen et al.
2005/0059503 A1 3/2005 Briggs et al.
2005/0060586 A1 3/2005 Burger et al.
2005/0076161 A1 4/2005 Albanna
2005/0085298 A1 4/2005 Woolston
2005/0110751 A1 5/2005 Wilson et al.
2005/0116020 A1 6/2005 Smolucha et al.
2005/0125826 A1 6/2005 Hunleth
2005/0127868 A1 6/2005 Calhoon et al.
2005/0130739 A1 6/2005 Argentar
2005/0134555 A1 6/2005 Liao
2005/0138851 A1 6/2005 Ingraselino
2005/0156883 A1 7/2005 Wilson et al.
2005/0162389 A1 7/2005 Obermeyer
2005/0164601 A1 7/2005 McEachen et al.
2005/0170889 A1 8/2005 Lum et al.
2005/0172734 A1 8/2005 Alsio
2005/0174324 A1 8/2005 Liberty
2005/0176485 A1 8/2005 Ueshima
2005/0179644 A1 8/2005 Alsio
2005/0202866 A1 9/2005 Luciano et al.
2005/0210418 A1 9/2005 Marvit
2005/0210419 A1 9/2005 Kela
2005/0212749 A1 9/2005 Marvit et al.
2005/0212750 A1 9/2005 Marvit et al.
2005/0212751 A1 9/2005 Marvit et al.
2005/0212752 A1 9/2005 Marvit et al.
2005/0212753 A1 9/2005 Marvit et al.
2005/0212754 A1 9/2005 Marvit et al.
2005/0212755 A1 9/2005 Marvit
2005/0212756 A1 9/2005 Marvit et al.
2005/0212757 A1 9/2005 Marvit et al.
2005/0212758 A1 9/2005 Marvit et al.
2005/0212759 A1 9/2005 Marvit et al.
2005/0212760 A1 9/2005 Marvit et al.
2005/0212764 A1 9/2005 Toba
2005/0212767 A1 9/2005 Marvit
2005/0215295 A1 9/2005 Arneson
2005/0215322 A1 9/2005 Himoto et al.
2005/0217525 A1 10/2005 McClure
2005/0227579 A1 10/2005 Yamaguchi et al.
2005/0233808 A1 10/2005 Himoto et al.
2005/0239548 A1 10/2005 Ueshima et al.
2005/0243061 A1 11/2005 Liberty et al.
2005/0243062 A1 11/2005 Liberty
2005/0253806 A1 11/2005 Liberty et al.
2005/0256675 A1 11/2005 Kurata
2005/0277465 A1 12/2005 Whitten et al.
2005/0278741 A1 12/2005 Robarts
2006/0003843 A1 1/2006 Kobayashi et al.
2006/0007115 A1 1/2006 Furuhashi
2006/0009270 A1 1/2006 Kobayashi et al.
2006/0028446 A1 2/2006 Liberty
2006/0040720 A1 2/2006 Harrison
2006/0046849 A1 3/2006 Kovacs
2006/0092133 A1 5/2006 Touma
2006/0094502 A1 5/2006 Katayama et al.
2006/0122474 A1 6/2006 Teller et al.
2006/0123146 A1 6/2006 Wu et al.
2006/0148563 A1 7/2006 Yang
2006/0152487 A1 7/2006 Grunnet-Jepsen
2006/0152488 A1 7/2006 Salsman
2006/0152489 A1 7/2006 Sweetser
2006/0178212 A1 8/2006 Penzias
2006/0205507 A1 9/2006 Ho
2006/0231794 A1 10/2006 Sakaguchi et al.
2006/0246403 A1 11/2006 Monpouet et al.
2006/0252475 A1 11/2006 Zalewski et al.
2006/0252477 A1 11/2006 Zalewski et al.
2006/0256081 A1 11/2006 Zalewski et al.
2006/0258452 A1 11/2006 Hsu
2006/0264258 A1 11/2006 Zalewski et al.
2006/0264260 A1 11/2006 Zalewski et al.
2006/0267935 A1 11/2006 Corson
2006/0273907 A1 12/2006 Heiman
2006/0282873 A1 12/2006 Zalewski et al.
2006/0284842 A1 12/2006 Poltorak
2006/0287030 A1 12/2006 Briggs et al.
2006/0287085 A1 12/2006 Mao
2006/0287086 A1 12/2006 Zalewski et al.
2006/0287087 A1 12/2006 Zalewski et al.
2007/0015588 A1 1/2007 Matsumoto et al.
2007/0021208 A1 1/2007 Mao et al.
2007/0049374 A1 3/2007 Ikeda et al.
2007/0050597 A1 3/2007 Ikeda
2007/0052177 A1 3/2007 Ikeda et al.
2007/0060391 A1 3/2007 Ikeda et al.
2007/0066394 A1 3/2007 Ikeda et al.
2007/0066396 A1 3/2007 Weston et al.
2007/0072680 A1 3/2007 Ikeda et al.
2007/0082720 A1 4/2007 Bradbury et al.
2007/0087837 A1 4/2007 Bradbury et al.
2007/0087838 A1 4/2007 Bradbury et al.
2007/0087839 A1 4/2007 Bradbury et al.
2007/0091084 A1 4/2007 Ueshima et al.
2007/0093170 A1 4/2007 Zheng
2007/0093291 A1 4/2007 Hulvey
2007/0093293 A1 4/2007 Osnato
2007/0100696 A1 5/2007 Illingworth
2007/0159362 A1 7/2007 Shen
2007/0173705 A1 7/2007 Teller et al.
2007/0252815 A1 11/2007 Kuo
2007/0257884 A1 11/2007 Taira
2007/0265075 A1 11/2007 Zalewski
2007/0265076 A1 11/2007 Lin
2007/0265088 A1 11/2007 Nakada et al.
2008/0015017 A1 1/2008 Ashida et al.
2008/0039202 A1 2/2008 Sawano et al.
2008/0119270 A1 5/2008 Ohta
2008/0121782 A1 5/2008 Hotelling et al.
2008/0174550 A1 7/2008 Laurila
2008/0183678 A1 7/2008 Weston et al.
2008/0216765 A1 9/2008 Kates
2008/0273011 A1 11/2008 Lin
2008/0278445 A1 11/2008 Sweetser
2009/0009294 A1 1/2009 Kupstas
2009/0033621 A1 2/2009 Quinn
2009/0137323 A1 5/2009 Fiegener et al.
2009/0156309 A1 6/2009 Weston et al.
2009/0203446 A1 8/2009 Bradbury et al.
2009/0215534 A1 8/2009 Wilson et al.
2009/0273560 A1 11/2009 Kalanithi et al.
2009/0326851 A1 12/2009 Tanenhaus
2010/0056285 A1 3/2010 Weston et al.
2010/0105475 A1 4/2010 Mikhailov
2010/0144436 A1 6/2010 Marks et al.
2010/0289744 A1 11/2010 Cohen
2011/0081969 A1 4/2011 Ikeda
2011/0177853 A1 7/2011 Ueshima .
2011/0190052 A1 8/2011 Takeda
2012/0295699 A1 11/2012 Reiche
2012/0295703 A1 11/2012 Reiche et al.
2012/0295704 A1 11/2012 Reiche
2013/0116020 A1 5/2013 Barney et al.
2013/0116051 A1 5/2013 Barney et al.
2013/0196727 A1 8/2013 Barney et al.
2013/0196770 A1 8/2013 Barney et al.
2013/0303276 A1 11/2013 Weston et al.
2014/0100029 A1 4/2014 Reiche et al.
2014/0194206 A1 7/2014 Barney et al.

(56) **References Cited**

U.S. PATENT DOCUMENTS

2014/0235341	A1	8/2014	Barney et al.
2014/0256446	A1	9/2014	Barney et al.
2014/0323221	A1	10/2014	Ikeda
2014/0342831	A1	11/2014	Weston et al.
2014/0378233	A1	12/2014	Weston et al.
2015/0038229	A1	2/2015	Reiche et al.
2015/0050971	A1	2/2015	Briggs et al.
2015/0094140	A1	4/2015	Barney et al.
2015/0165316	A1	6/2015	Barney et al.
2015/0174479	A1	6/2015	Reiche et al.
2015/0251100	A1	9/2015	Barney et al.
2015/0328556	A1	11/2015	Weston
2015/0360125	A1	12/2015	Barney et al.
2016/0030836	A1	2/2016	Barney et al.
2016/0067600	A1	3/2016	Barney et al.

FOREIGN PATENT DOCUMENTS

CN	1338961		3/2002
CN	1559644		1/2005
DE	3930581		3/1991
DE	19701374		7/1997
DE	19632273		2/1998
DE	19648487		6/1998
DE	19814254		10/1998
DE	19937307		2/2000
DE	10029173		1/2002
DE	10219198		11/2003
EP	0 264 782	A2	4/1988
EP	0 570 999		12/1988
EP	0 322 825	A2	7/1989
EP	0 695 565	A1	2/1996
EP	0 835 676		4/1998
EP	0 848 226		6/1998
EP	0 852 961		7/1998
EP	1 062 994		12/2000
EP	1 279 425		1/2003
EP	1 293 237		3/2003
EP	0 993 845		12/2005
FR	2547093	A1	12/1984
GB	2244546		12/1991
GB	2284478		6/1995
GB	2307133		5/1997
GB	2310481		8/1997
GB	2316482		2/1998
GB	2319374		5/1998
GB	2325558	A	11/1998
GB	2388418		11/2003
JP	62-14527		1/1987
JP	63-186687		8/1988
JP	03-210622		9/1991
JP	06-050758		2/1994
JP	6154422		6/1994
JP	06-198075		7/1994
JP	6190144		7/1994
JP	H0677387		10/1994
JP	06-308879		11/1994
JP	07-028591		1/1995
JP	07-044315		2/1995
JP	07-107573		4/1995
JP	07-115690		5/1995
JP	07-146123		6/1995
JP	07-200142		8/1995
JP	07-262797		10/1995
JP	07-302148		11/1995
JP	07-318332		12/1995
JP	08-095704		4/1996
JP	08-106352		4/1996
JP	08-111144		4/1996
JP	08-114415		5/1996
JP	08-122070		5/1996
JP	08-152959		6/1996
JP	08-191953		7/1996
JP	08-211993		8/1996
JP	08-221187		8/1996
JP	08-305355		11/1996
JP	08-335136		12/1996
JP	09-034456		2/1997
JP	09-149915		6/1997
JP	09-164273		6/1997
JP	09-225137		9/1997
JP	09-230997		9/1997
JP	09-237087		9/1997
JP	09-274534		10/1997
JP	09-319510		12/1997
JP	10-021000		1/1998
JP	10-033831		2/1998
JP	10-043349	A	2/1998
JP	10-099542		4/1998
JP	10-154038		6/1998
JP	10-235019		9/1998
JP	10-254614		9/1998
JP	11-053994		2/1999
JP	11-099284		4/1999
JP	2000-176150		6/2000
JP	2000-208756		7/2000
JP	2000-270237		9/2000
JP	2000-300839		10/2000
JP	2000-308756		11/2000
JP	2000-325653		11/2000
JP	2001-038052		2/2001
JP	2001-058484		3/2001
JP	2001-104643		4/2001
JP	U20009165		4/2001
JP	2001-175412		6/2001
JP	2001-251324		9/2001
JP	2001-265521		9/2001
JP	2001-306245		11/2001
JP	2002-007057		1/2002
JP	2002-062981		2/2002
JP	2002-78969		3/2002
JP	2002-082751		3/2002
JP	2002-091692		3/2002
JP	2002-126375		5/2002
JP	2002-136694		5/2002
JP	2002-153673		5/2002
JP	2002-202843		7/2002
JP	2002-224444		8/2002
JP	2002-233665		8/2002
JP	2002-298145		10/2002
JP	2003-053038		2/2003
JP	2003-140823		5/2003
JP	2003-208263		7/2003
JP	2003 236246		8/2003
JP	2003-325974		11/2003
JP	2004-062774		2/2004
JP	2004-313429		11/2004
JP	2004-313492		11/2004
JP	2005-040493		2/2005
JP	2005-063230		3/2005
JP	2006-113019		4/2006
JP	2006-136694		6/2006
JP	2006-216569		8/2006
JP	2007-083024		4/2007
JP	4043702		2/2008
NL	9300171		8/1994
RU	2077358	C1	4/1997
RU	2125853		2/1999
RU	2126161		2/1999
WO	WO 90/07961		7/1990
WO	WO 94/02931		3/1994
WO	WO 95/11730	A1	5/1995
WO	WO 96/05766		2/1996
WO	WO 96/14115		5/1996
WO	WO 96/14121		5/1996
WO	WO 97/09101		3/1997
WO	WO 97/12337		4/1997
WO	WO 97/17598		5/1997
WO	WO 97/20305		6/1997
WO	WO 97/28864		8/1997
WO	WO 97/32641		9/1997
WO	WO 98/11528		3/1998
WO	WO 98/36400		8/1998
WO	WO 99/58214		11/1999

(56) **References Cited**

FOREIGN PATENT DOCUMENTS

WO	WO 00/33168		6/2000
WO	WO 00/35345		6/2000
WO	WO 00/61251	A1	10/2000
WO	WO 00/63874		10/2000
WO	WO 00/67863		11/2000
WO	WO 01/46916	A2	6/2001
WO	WO 01/87426		11/2001
WO	WO 01/91042		11/2001
WO	WO 02/17054		2/2002
WO	WO 02/34345		5/2002
WO	WO 02/47013		6/2002
WO	WO 03/015005		2/2003
WO	WO 03/043709		5/2003
WO	WO 03/044743	A2	5/2003
WO	WO 03/088147		10/2003
WO	WO 03/107260		12/2003
WO	WO 2004/039055		5/2004
WO	WO 2004/051391		6/2004
WO	WO 2004/087271		10/2004
WO	WO 2006/039339		4/2006
WO	WO 2006/101880		9/2006
WO	WO 2007/058996		5/2007
WO	WO 2007/120880		10/2007

OTHER PUBLICATIONS

"Smart Card News Online", published Oct. 25, 2006, source www.smartcard.co.ukINOLARCH/2006/0ctober/251006.html.
"Emerald Forest Toys" [online] [retrieved on Sep. 14, 2005], retrieved from Internet <URL:http://www.pathworks.net/print_eft.html>.
"Gatemaster Features", "Gatemaster Main Screen", "Gatemaster: So You're a Computer Geek eh?", and "Gatemaster Pricing" by Gate Master Management System, internet article, Jul. 9, 1997; http://web.archive.org/web/19970709135000/www.gatemaster.com/gmfeat.htm (accessed on Dec. 11, 2008).
"Ollivanders: Makers of Fine Wands." Dec. 2, 2002. [online] [retrieved on Mar. 30, 2005], Retrieved from Internet (URL:http//www.cim.mcgill.edu/!jer/courses/hci/assignments/2002/www.ece.mcgill.ca/%7Eeuryd).
International Preliminary Examination Report, International App. No. PCT/US00/09482; dated Apr. 24, 2001; 4 pages.
International Search Report and Written Opinion, International App. No. PCT/US04/08912; mailed Aug. 26, 2004; 10 pages.
International Search Report and Written Opinion, International App. No. PCT/US05/34831; mailed Jul. 2, 2008; 11 pages.
International Search Report and Written Opinion; International Appl. No. PCT/US2006/043915; mailed Mar. 9, 2007; 8 pages.
Laser Tag: General info: History of Laser Tag, http://lasertag.org/general/history.html (accessed on Mar. 13, 2008; historical dates start on Mar. 1984).
Laser Tag: Lazer Tag Branded Gear; last update Sep. 26, 2006, http://home.comcast.net/~ferret1963/Lazer_Tag_Brand.HTML (accessed on Mar. 13, 2008; historical dates start in 1986).
Owl Magic Wand & Owl Magic Orb Raving Toy Maniac, Nov. 19, 2001. [online] [retrieved on Mar. 30, 2005], Retrieved from the Internet (URL:http://www.toymania.com/news/messages/1358.shtm1).
"At-home fishing", http:www.virtualpet.com/vp/media/fishing/homef.jpg (accessed on Jan. 14, 2010).
"Coleco Vision: Super Action™ Controller Set," www.vintagecomputing.com/wp-content/images/retroscan/coleco_sac_1_large.jpg. (downloaded from Internet on Sep. 2, 2011; available at http://www.vintagecomputing.com on Sep. 4, 2006).
"Controllers—Atari Space Age Joystic," AtariAge: Have You Played Atari Today? www.atariage.com/controller_page.html?SystemID=2600& ControllerID-12., Sep. 1, 2006.
"Controllers—Booster Grip," AtariAge: Have You Played Atari Today? www.atariage.com/controller_page.html?SystemID=2600& ControllerID=18., (accessed on Jul. 29, 2011; allegedly available as early as Sep. 1, 2006).
"Electronic Plastic: BANDAI—Power Fishing" "Power Fishing Company: BANDAI," 1 page, http://www.handhelden.com/Bandai/PowerFishing.html., 1984 (accessed on Jul. 29, 2011).
"Game Controller" Wikipedia, Jan. 5, 2005.
"Get Bass," Videogame by Sega, The International Arcade Museum and the KLOV (accessed at http://www.arcade-museum.com/game_detail.php?game_id=7933 on Jul. 29, 2011).
"Glove-based input interfaces" Cyberglove/Cyberforce, http://www.angelfire.com/ca7/mellott124/glove1.htm (accessed on Jul. 29, 2011).
"Harry Potter Magic Spell Challenge," Tiger Electronics, 2001.
"Imp Coexists With Your Mouse," Byte, p. 255, Jan. 1994.
"MEMS enable smart golf clubs," Small Times, Jan. 6, 2005, accessed at http://dpwsa.electroiq.com/index/display/semiconductors-article-display/269788/articles/small-times/consumer/2005/01/mems-enable-smart-golf-clubs.html on Jul. 29, 2011.
"Miacomet and Interact Announce Agreement to Launch Line of Reel Feel™ Sport Controllers", PR Newswire (May 13, 1999), accessed at http://www.thefreelibrary.com/_print/PrintArticle.aspx?id=54621351 on Sep. 7, 2011.
"The N.I.C.E. Project," YouTube video uploaded by evltube on Nov. 20, 2007 (accessed at http://www.youtube.com/watch?v=ihGXa21qLms on Sep. 8, 2011; digital copy of video available upon request).
"212 Series Encoders" HT12A/HT12E by HOLTEK—Product Specification, Apr. 2000.
"212 Series of Decoders" HT12D/HT12F by HOLTEK—Product Specification, Nov. 2002.
"ASCII Entertainment releases the Grip," ASCII Entertainment Software—Press News—Coming Soon Magazine, May 1997 (electronic version accessed at http://www.csoon.com/issue25/p_ascii4.htm on Sep. 6, 2011).
"Enchanted Spell-Casting Sorcerers Wand" by Ken Holt as featured on www.inventionconnection.com online advertisement, Dec. 2002.
"Interview with Pat Goschy, the "Real" Nintendo Wii Inventor," YouTube video uploaded by agbulls on Jan. 14, 2008 (accessed at http://www.youtube.com/watch?v=oKtZysYGDLE on Feb. 11, 2011; digital copy of video available upon request).
"Micro Tilt Switch" D6B by Omron® Product Specification, Jan. 2007.
"Nintendo Wii Controller Invented by Americans: Midway Velocity Controller Technology Brief," You Tube Video presentation dated Jun. 28, 2000; uploaded by drjohniefever on Sep. 8, 2007 (accessed at http://www.youtube.com/watch?v=wjLhSrSxFNw on Jun. 30, 2010; digital copy of video available upon request).
"Raise High the 3D Roof Beam: Kids shape these PC games as they go along." By Anne Field, article as featured in Business Week 2001. (Nov. 26, 2001).
"Serial-in Parallel-out Shift Register" SN54/74LS164 by Motorola-Product Specification, Fifth Edition, 1992.
"Sony PS2 Motion Controller 5 years ago (2004)," YouTube Video uploaded by r1oot on Jul. 8, 2009 (accessed at http://www.youtube.com/watch?v=JbSzmRt7HhQ&feature=related on Sep. 6, 2011; digital copy of video available upon request).
"The Big Ideas Behind Nintendo's Wii," Business Week, Nov. 16, 2006 (accessed at http://www.businessweek.com/technology/content/nov2006/tc20061116_750580.htm on Aug. 31, 2011).
"The Magic Labs Conjure Wands" as featured on www.magic-lab.com Product Specification, Dec. 2002.
"Tilt Switch" by Fuji & Co. as featured on www.fuji-piezo.com online advertisement, May 2001.
"Toy Wand Manufacturer Selects MEMSIC Sensor: Magic Labs cuts costs with MEMSIC sensor" Press Release by MEMSIC, Inc. as featured on www.memsic.com, May 2002.
"Wii Mailbag," IGN.com, Jan. 26, 2006 (accessed at http://uk.wii.ign.com/mail/2006-01-26.html on Aug. 31, 2011).
Acar, et al., "Experimental evaluation and comparative analysis of commercial variable-capacitance MEMS accelerometers," Journal of Micromechanics and Microengineering, vol. 13 (1), pp. 634-645, May 2003.
Achenbach, "Golf's New Measuring Stick," Golfweek, 1 page, Jun. 11, 2005.

(56) **References Cited**

OTHER PUBLICATIONS

Act Labs, Miacomet Background, Jan. 27, 2001, http://web.archive.org/web/200101271753/http://www.act-labs.com/ realfeel_background.htm, (accessed on Sep. 7, 2011).
Agard, "Advances in Strapdown Inertial Systems," Agard Lecture Series No. 133, Advisory Group for Aerospace Research and Development, Neuilly-Sur-Seine (France) May 1984.
AirPad Controller Manual, (AirPad Corp. 2000).
Airpad Motion Reflex Controller for Sony Playstation—Physical Product, (AirPad Corp. 2000).
Algrain, "Estimation of 3-D Angular Motion Using Gyroscopes and Linear Accelerometers," IEEE Transactions on Aerospace and Electronic Systems, vol. 27, No. 6, pp. 910-920, Nov. 1991.
Algrain, et al., "Accelerometer Based Line-of-Sight Stabilization Approach for Pointing and Tracking System," Second IEEE Conference on Control Applications, Sep. 13-16, 1993 Vancouver, B.C.., pp. 159-163 Sep. 13-16, 1993.
Algrain, et al., "Interlaced Kalman Filtering of 3-D Angular Motion Based on Euler's Nonlinear Equations," IEEE Transactions on Aerospace and Electronic Systems, vol. 30, No. 1, Jan. 1994.
Allen, et al., "A General Method for Comparing the Expected Performance of Tracing and Motion Capture Systems," {VRST} '05: Proceedings of the ACM Symposium on Virtual Reality Software and Technology, Nov. 7-9, 2005 Monterey, California Nov. 7-9, 2005.
Allen, et al., "Tracking: Beyond 15 Minutes of Thought," SIGGRAPH 2001 Course 11, Aug. 2001.
Analog Devices "ADXL202E Low-Cost .+−.2 g Dual-Axis Accelerometer with Duty Cycle Output" Data Sheet, Rev. A, Oct. 2000.
Analog Devices "ADXL330 Small, Low Power, 3-Axis ±2 g iMEMS Accelerometer" Data Sheet, Rev. PrA Oct. 2005.
Analog Devices "ADXL50 Monolithic Accelerometer with Signal Conditioning" Data Sheet Mar. 1996.
Analog Devices "ADXRS150±150°/s Single Chip Yaw Rate Gyro with Signal Conditioning" Data Sheet, Rev. B, Mar. 2004.
Analog Devices "ADXRS401 ±75°/s Single Chip Yaw Rate Gyro with Signal Conditioning" Data Sheet, Rev. O, Jul. 2004.
Analog Devices "MicroConverter®, Multichannel 12-Bit ADC with Embedded Flash MCU, ADuC812" Data Sheet (Feb. 2003), available at http://www.analog.com/static/imported-files/data_sheets/ADUC812.pdf.
Analog Devices, "ADXL150/ADXL250, ±5g to ±50g, Low Noise, Low Power, Single/Dual Axis iMEMS® Accelerometers," Data Sheet, Rev. 0 (Apr. 1998).
Ang, et al., "Design and Implementation of Active Error Canceling in Hand-held Microsurgical Instrument," Paper presented at 2001 IEEE/RSJ International Conference on Intelligent Robots and Systems (Oct./Nov. 2001).
Ang, et al., "Design of All-Accelerometer Inertial Measurement Unit for Tremor Sensing in Hand-held Microsurgical Instrument," Proceedings of the 2003 IEEE International Conference on Robotics & Automation, Sep. 14-19, 2003, Taipei, Taiwan, pp. 1781-1786, Sep. 14-19, 2003.
Apostolyuk, Vladislav, "Theory and Design of Micromechanical Vibratory Gyroscopes," MEMS/NEMS Handbook, Springer, vol. 1, pp. 173-195 (May 2006).
Ascension Technology, 6D Bird Class B Installation and Operation Guide, Apr. 30, 2003.
ASCII, picture of one-handed controller, 2 pages, Feb. 6, 2006.
Ator, "Image-Velocity Sensing with Parallel-Slit Reticles," Journal of the Optical Society of America, vol. 53, No. 12, pp. 1416-1422, Dec. 1963.
Azarbayejani, et al, "Real-Time 3-D Tracking of the Human Body," M.I.T. Media Laboratory Perceptual Computing Section Technical Report No. 374, Appears in Proceedings of Image'Com 96, Bordeaux, France, May 1996.
Azarbayejani, et al., "Visually Controlled Graphics," M.I.T. Media Laboratory Perceptual Computing Section Technical Report No. 374, Appears in IEEE Transactions on Pattern Analysis and Machine Intelligence, vol. 15, No. 6, pp. 602-605, Jun. 1993.
Azuma et al., "Improving Static and Dynamic Registration in an Optical See-Through HMD," Paper Presented at SIGGRAPH '94 Annual Conference in Orlando, FL, Mar. 1994.
Azuma, "Predictive Tracking for Augmented Reality," Ph.D. Dissertation, University of North Carolina at Chapel Hill, Department of Computer Science, Feb. 1995.
Azuma, et al., "A Frequency-Domain Analysis of Head-Motion Prediction," Paper Presented at SIGGRAPH '95 Annual Conference in Los Angeles, CA, Feb. 1995.
Azuma, et al., "A motion-stabilized outdoor augmented reality system," Proceedings of IEEE Virtual Reality '99, Houston, TX, Mar. 13-17, 1999, pp. 252-259.
Azuma, et al., "Making Augmented Reality Work Outdoors Requires Hybrid Tracking," Proceedings of the International Workshop on Augmented Reality, San Francisco, CA, Nov. 1, 1998.
Bachmann et al., "Inertial and Magnetic Posture Tracking for Inserting Humans into Networked Virtual Environments," Virtual Reality Software and Technology archive, Paper Presented at ACM Symposium on Virtual Reality Software and Technology in Banff, Alberta, Canada, Dec. 2000.
Bachmann et al., "Orientation Tracking for Humans and Robots Using Inertial Sensors" Paper Presented at 199 International Symposium on Computational Intelligence in Robotics & Automation (CIRA '99), Mar. 1999.
Bachmann, "Inertial and Magnetic Angle Tracking of Limb Segments for Inserting Humans into Synthetic Environments," Dissertation, Naval Postgraduate School, Monterey, CA (Dec. 2000).
Badler, et al., "Multi-Dimensional Input Techniques and Articulated Figure Positioning by Multiple Constraints," Interactive 3D Graphics, Oct. 1986; pp. 151-169.
Baker et al., "Active Multimodal Control of a 'Floppy' Telescope Structure," Proc. SPIE, vol. 4825, pp. 74-81 (2002).
Balakrishnan, "The Rockin' Mouse: Integral 3D Manipulation on a Plane," Published in Proceedings of 1997 ACM Conference on Human Factors in Computing Systems (CHI'97), pp. 311-318, Jun. 1997.
Ballagas, et al., "iStuff: A Physical User Interface Toolkit for Ubiquitous Computer Environments," Paper presented at SIGCHI Conference on Human Factors in Computing Systems, Apr. 2003.
Baraff, "An Introduction to Physically Based Modeling: Rigid Body Simulation I—Unconstrained Rigid Body Dynamics," SIGGRAPH 97 Course Notes, Robotics Institute, Carnegie Mellon University (Aug. 1997).
Baudisch, et al., "Soap: a Pointing Device that Works in Mid-air," Proc. UIST'06, Oct. 15-18, 2006, Montreux, Switzerland (Oct. 2006).
BBN Report No. 7661, "Virtual Environment Technology for Training (VETT)," The Virtual Environment and Teleoperator Research Consortium (VETREC), pp. III-A-27 to III-A-40 (Mar. 1992).
Behringer, "Improving the Registration Precision by Visual Horizon Silhouette Matching," Paper presented at First IEEE Workshop on Augmented Reality (Feb. 1998).
Behringer, "Registration for Outdoor Augmented Reality Applications Using Computer Vision Techniques and Hybrid Sensors," Paper presented at IEEE Virtual Reality (VR '99) Conference in Houston, TX (Mar. 1999).
BEI GyrochipTM Model QRS11 Data Sheet, BEI Systron Donner Inertial Division, BEI Technologies, Inc., (Sep. 1998).
Benbasat, "An Inertial Measurement Unit for User Interfaces," Massachusetts Institute of Technology Masters Thesis, (Sep. 2000).
Benbasat, et al., "An Inertial Measurement Framework for Gesture Recognition and Applications," Paper Presented at International Gesture Workshop on Gesture and Sign Languages in Human-Computer Interaction (GW'01), London, UK (Sep. 2001).
Bhatnagar, "Position trackers for Head Mounted Display systems: A survey" (Technical Report), University of North Carolina at Chapel Hill (Mar. 1993).
Bianchi, "A Tailless Mouse, New cordless Computer Mouse Invented by ArcanaTech," Inc.com, Jun. 1, 1992 (accessed at http://www.inc.com/magazine/19920601/4115.html on Jun. 17, 2010).

(56) **References Cited**

OTHER PUBLICATIONS

Bishop, "The Self-Tracker: A Smart Optical Sensor on Silicon," Ph.D. Dissertation, Univ. of North Carolina at Chapel Hill (1984), 65 pages.
Bjork, Staffan et al., "Pirates! Using the Physical World as a Game Board," Reportedly presented as part of INTERACT 2001: 8th TC.13 IFIP International Conference on Human-Computer Interaction, Tokyo Japan (Jul. 9-13, 2001).
Bluffing Your Way in Pokemon, Oct. 14, 2002, 7 pages.
Bona, et al., "Optimum Reset of Ship's Inertial Navigation System," IEEE Transactions on Aerospace and Electronic Systems, Abstract only (1965) (accessed at http://oai.dtic.mil/oai/oai?verb=getRecord&metadataPrefix=html&identifier=AD0908193 on Jun. 17, 2010).
Borenstein, et al., "Where am I? Sensors and Methods for Mobile Robot Positioning" (Apr. 1996).
Borovoy, R. , et al., "Things that Blink: Computationally Augmented Name Tags," IBM Systems Journal, vol. 35, Nos. 3 & 4, 1996; pp. 488-495 (May 1996).
Borovoy, Richard et al., "Groupwear: Nametags That Tell About Relationships," Chi 98, Apr. 1998, pp. 329-330.
Boser, "3-Axis Accelerometer with Differential Sense Electronics," Berkeley Sensor & Actuator Center, available at http://www.eecs.berkeley.edu/.about.boser/pdf/3axis.pdf (Feb. 1997).
Boser, "Accelerometer Design Example: Analog Devices XL-05/5," Berkeley Sensor & Actuator Center, available at http://wvvw.eecs.berkeley.edu/.about.boser/pdf/xI05.pdf (1996).
Bowman, et al., "An Introduction to 3-D User Interface Design," MIT Presence, vol. 10, No. 1, pp. 96-108 (Feb. 2001).
Briefs, (New & Improved), (Brief Article), PC Magazine, Oct. 26, 1993.
Britton et al., "Making Nested Rotations Convenient for the User," SIGGRAPH '78 Proceedings of the 5th Annual Conference on Computer Graphics and Interactive Techniques, vol. 12, Issue 3, pp. 222-227 (Aug. 1978).
Britton, "A Methodology for the Ergonomic Design of Interactive Computer Graphic Systems, and its Application to Crystallography" Ph.D. Dissertation, University of North Carolina at Chapel Hill, Dept. of Computer Science (1977).
Brownell, Richard, Review: Peripheral-GameCube-G3 Wireless Controller, gamesarefun.com, Jul. 13, 2003 (accessed at http://www.gamesarefun.com/gamesdb/perireview.php?perireviewid=1 on Jul. 29, 2011).
Buchanan, Levi: "Happy Birthday, Rumble Pak," IGN.com, Apr. 3, 2008 (accessed at http://retro.ign.com/articles/864/864231p1.html on Jul. 29, 2011).
Business Wire, "Feature/Virtual reality glasses that interface to Sega channel,Time Warner, TCI; project announced concurrent with COMDEX," Nov. 14, 1994 (accessed at http://findarticles.com/p/articles/mi_m0EIN/is_1994_Nov_14/ai_15923497/?tag=content;col1 on Jul. 7, 2010).
Business Wire, "Free-space 'Tilt' Game Controller for Sony Playstation Uses Scenix Chip; SX Series IC Processes Spatial Data in Real Time for On-Screen," Dec. 6, 1999 (accessed at http://findarticles.com/p/articles/mi_m0EIN/is_1999_Dec_6/ai_58042965/?tag=content;col1 on Jul. 7, 2010)).
Business Wire, "Logitech MAGELLAN 3D Controller," Apr. 14, 1997 (accessed at http://www.thefreelibrary.com/_/print/PrintArticle.aspx?id=19306114 on Feb. 10, 2011).
Business Wire, "Mind Path Introduces GYROPOINT RF Wireless Remote," Jan. 27, 2000 (accessed at http://www.allbusiness.com/company-activities-management/operations-office/6381880-1.html on Jun. 17, 2010).
Business Wire, "Pegasus' Wireless PenCell Writes on Thin Air with ART's Handwriting Recognition Solutions," Business Editors/High Tech Writers Telecom Israel 2000 Hall 29, Booth 19-20, Nov. 7, 2000 (accessed at http://www.highbeam.com/doc/1G1-66658008.html on Jun. 17, 2010).
Business Wire, "RPI ships low-cost pro HMD Plus 3D Mouse and VR PC graphics card system for CES," Jan. 9, 1995 (accessed at http://www.highbeam.com/doc/1G1-16009561.html on Jun. 17, 2010).
Business Wire, "InterSense Inc. Launches InertiaCube2—The World's Smallest Precision Orientation Sensor with Serial Interface," Aug. 14, 2001 (accessed at http://www.highbeam.com/doc/1G1-77183067.html/print on Sep. 7, 2011.).
Buxton et al., "A Study in Two-Handed Input," Proceedings of CHI '86, pp. 321-326 (1986) (accessed at http://www.billbuxton.com/2hands.html on Jul. 29, 2011).
Buxton, Bill, "A Directory of Sources for Input Technologies" (last updated Apr. 19, 2001), http://web.archive.org/web/20010604004849/http://www.billbuxton.com/InputSources.html (accessed on Sep. 8, 2011).
Buxton, Bill, "Human input/output devices," In M. Katz (ed.), Technology Forecast: 1995, Menlo Park, CA: Price Waterhouse World Firm Technology Center, pp. 49-65 (Sep. 1994).
Canaday, "R67-26 The Lincoln Wand," IEEE Transactions on Electronic Computers, vol. EC-16, No. 2, p. 240 (Apr. 1967) (downloaded from IEEE Xplore on Jul. 7, 2010).
Caruso, "Application of Magnetoresistive Sensors in Navigation Systems," Sensors and Actuators, SAE SP-1220, pp. 15-21 (Feb. 1997); text of article accessed at http://www.ssec.honeywell.com/position-sensors/datasheets/sae.pdf.
Caruso, "Applications of Magnetic Sensors for Low Cost Compass Systems," Honeywell, SSEC, Paper presented at IEEE 2000 Position Location and Navigation Symposium (Mar. 2000), accessed at http://www.ssec.honeywell.com/magnetic/datasheets/lowcost.pdf.
Caruso, et al., "A New Perspective on Magnetic Field Sensing," Sensors Magazine, Dec. 1, 1998 (accessed at http://www.sensorsmag.com/sensors/electric-magnetic/a-new-perspective-magnetic-field-sensing-855 on Jun. 17, 2010).
Caruso, et al., "Vehicle Detection and Compass Applications using AMR Magnetic Sensors", Paper presented at 1999 Sensors Expo in Baltimore, Maryland (May 1999), available at http://masters.donntu.edu.ua/2007/kita/gerus/library/amr.pdf.
Chatfield, "Fundamentals of High Accuracy Inertial Navigation," vol. 174 Progress in Astronautics and Aeronautics, American Institute of Aeronautics and Astronautics, Inc. (1997).
Cheng, "Direct interaction with Large-Scale Display Systems using Infrared Laser Tracking Devices," Paper presented at Australasian Symposium on Information Visualisation, Adelaide, Australia (Jan. 2003).
Cheok, et al., "Micro-Accelerometer Based Hardware Interfaces for Wearable Computer Mixed Reality Applications," 6th International Symposium on Wearable Computers (ISWC'02), 8 pages.
Cho, et al., "Magic Wand: A Hand-Drawn Gesture Input Device in 3-D Space with Inertial Sensors," Proceedings of the 9th Intl Workshop on Frontiers in Handwriting Recognition (IWFHR-9 2004), IEEE (Aug. 2004).
Clark, James H., "Designing Surfaces in 3-D," Graphics and Image Processing-Communications of the ACM, Aug. 1976; vol. 19; No. 8; pp. 454-460.
Clark, James H., "Three Dimensional Man Machine Interaction," Siggraph '76, Jul. 14-16 Philadelphia, Pennsylvania, 1 page.
CNET News.com, "Nintendo Wii Swings Into Action," May 25, 2006 (accessed at http://news.cnet.com/2300-1043_3-6070295-4.html on Aug. 5, 2011).
Cooke, et al., "NPSNET: Flight simulation dynamic modeling using quaternions," Presence, vol. 1, No. 4, pp. 404-420, (Jan. 25, 1994).
Crecente, Brian, "Motion Gaming Gains Momentum," kotaku.com, Sep. 17, 2010 (accessed at http://kotaku.com/5640867/motion-gaming-gains-momentum on Aug. 31, 2011).
CSIDC Winners—"Tablet-PC Classroom System Wins Design Competition," IEEE Computer Society Press, vol. 36, Issue 8, pp. 15-18, IEEE Computer Society, Aug. 2003.
Cutrone, "Hot products: Gyration GyroPoint Desk, GyroPoint Pro gyroscope-controlled wired and wireless mice," Results from the Comdex Show Floor, Computer Reseller News, Dec. 4, 1995 (accessed from LexisNexis research database on Feb. 17, 2011; see pp. 8 and 9 of reference submitted herewith).

(56) **References Cited**

OTHER PUBLICATIONS

Deering, Michael F. , "HoloSketch a Virtual Reality Sketching Animation Tool," ACM Transactions on Computer-Human Interaction, Sep. 1995; vol. 2, No. 3; pp. 220-238.
Deruyck, et al., "An Electromagnetic Position Sensor," Polhemus Navigation Sciences, Inc., Burlington, VT (Nov. 1973) (Abstract from DTIC Online).
Dichtburn, "Camera in Direct3D" Toymaker (Feb. 6, 2005), http://web.archive.org/web/20050206032104/http:/toymaker.info/games/html/camera.html (accessed on Jul. 29, 2011).
Digital ID Cards the next generation of 'smart' cards will have more than a one-track mind. Wall Street Journal, Jun. 25, 2001.
Donelson, et al., "Spatial Management of Information", Proceedings of 1978 ACM SIGGRAPH Conference in Atlanta, Georgia, pp. 203-209 (Aug. 1977).
Druin et al., Robots: Exploring New Technologies for Learning for Kids; 2000; Chapter One: To Mindstorms and Beyond; 27 pages (Jun. 2000).
Drzymala, Robert E., et al., "A Feasibility Study Using a Stereo-Optical Camera System to Verify Gamma Knife Treatment Specification," Proceedings of 22nd Annual EMBS International Conference, Jul. 2000; pp. 1486-1489.
Durlach, et al., "Virtual Reality: Scientific and Technological Challenges," National Academy Press (1995).
Emura, et al., "Sensor Fusion based Measurement of Human Head Motion," 3rd IEEE International Workshop on Robot and Human Communication (Jul. 1994).
Ewalt, David M., "Nintendo's Wii is a Revolution," Review, Forbes.com, Nov. 13, 2006 (accessed at http://www.forbes.com/2006/11/13/wii-review-ps3-tech-media-cx_de_1113wii.html on Jul. 29, 2011).
Ferrin, "Survey of Helmet Tracking Technologies," Proc. SPIE vol. 1456, p. 86-94 (Apr. 1991).
Fielder, Lauren "E3 2001: Nintendo unleashes GameCube software, a new Miyamoto game, and more," GameSpot, May 16, 2001 (accessed at http://www.gamespot.com/news/2761390/e3-2001-nintendo-unleashes-gamecube-software-a-new-miyamoto-game-and-more?tag=gallery_summary%3Bstory on Jul. 29, 2011).
U.S. Appl. No. 09/520,148, filed Mar. 7, 2000 by Miriam Mawle.
Foremski, T., "Remote Control Mouse Aims at Interactive TV" Electronics Weekly, Mar. 9, 1994.
Foxlin, "Head-tracking Relative to a Moving Vehicle or Simulator Platform Using Differential Inertial Sensors," Proceedings of Helmet and Head-Mounted Displays V, SPIE vol. 4021, AeroSense Symposium, Orlando, FL, Apr. 24-25, 2000.
Foxlin, "Inertial Head Tracker Sensor Fusion by a Complementary Separate-bias Kalman Filter," Proceedings of the IEEE 1996 Virtual Reality Annual International Symposium, pp. 185-194, 267 (Mar./Apr. 3, 1996).
Foxlin, "Generalized architecture for simultaneous localization, auto-calibration, and map-building," IEEE/RSJ Conf. on Intelligent Robots and Systems (IROS 2002), Oct. 2-4, 2002, Lausanne, Switzerland (Oct. 2002).
Foxlin, "Motion Tracking Requirements and Technologies," Chapter 8, from Handbook of Virtual Environment Technology, Kay Stanney, Ed., Lawrence Erlbaum Associates (Jan. 2002) (extended draft version available for download at http://www.intersense.com/pages/44/119/).
Foxlin, "Pedestrian Tracking with Shoe-Mounted Inertial Sensors," IEEE Computer Graphics and Applications, vol. 25, No. 6, pp. 38-46, (Nov./Dec. 2005).
Foxlin, et al., "An Inertial Head-Orientation Tracker with Automatic Drift Compensation for Use with HMD's," Proceedings of the 1994 Virtual Reality Software and Technology Conference, Aug. 23-26, 1994, Singapore, pp. 159-173 (1994).
Foxlin, et al., "Constellation™: A Wide-Range Wireless Motion-Tracking System for Augmented Reality and Virtual Set Applications," ACM SIGGRAPH 98, Orlando, Florida, Jul. 19-24, 1998.
Foxlin, et al., "Miniature 6-DOF Inertial System for Tracking HMDs," SPIE vol. 3362, Helmet and Head-Mounted Displays III, AeroSense 98, Orlando, FL, Apr. 13-14, 1998.
Foxlin, et al., "WearTrack: A Self-Referenced Head and Hand Tracker for Wearable Computers and Portable VR," Proceedings of International Symposium on Wearable Computers (ISWC 2000), Oct. 16-18, 2000, Atlanta, GA (2000).
Foxlin, et al., "FlightTracker: A Novel Optical/Inertial Tracker for Cockpit Enhanced Vision, Symposium on Mixed and Augmented Reality," Proceedings of the 3rd IEEE/ACM International Symposium on Mixed and Augmented Reality (ISMAR 2004), Nov. 2-5, 2004, Washington, D.C. (2004).
Foxlin, et al., "Miniaturization, Calibration & Accuracy Evaluation of a Hybrid Self-Tracker," IEEE/ACM International Symposium on Mixed and Augmented Reality (ISMAR 2003), Oct. 7-10, 2003, Tokyo, Japan (2003).
Foxlin, et al., "VIS-Tracker: A Wearable Vision-Inertial Self-Tracker," IEEE VR2003, Mar. 22-26, 2003, Los Angeles, CA (2003).
Frankle, "E3 2002: Roll O Rama," Roll-o-Rama GameCube Preview at IGN, May 23, 2002 (accessed at http://cube.ign.com/articles/360/360662p1.html on Sep. 7, 2011).
Friedmann, et al., "Device Synchronization Using an Optimal Linear Filter," SI3D '92: Proceedings of the 1992 symposium on Interactive 3D graphics, pp. 57-62 (Mar./Apr. 1992).
Friedmann, et al., "Synchronization in virtual realities," M.I.T. Media Lab Vision and Modeling Group Technical Report No. 157, Jan. 1991 to appear in Presence, vol. 1, No. 1, MIT Press, Cambridge, MA (1991).
FrontSide Field Test, "Get This!" Golf Magazine, Jun. 2005, p. 36.
Fuchs, Eric, "Inertial Head-Tracking," MS Thesis, Massachusetts Institute of Technology, Dept. of Electrical Engineering and Computer Science (Sep. 1993).
Furniss, Maureen, "Motion Capture," posted at http://web.mit.edu/m-i-t/articles/index_furniss.html on Dec. 19, 1999; paper presented at the Media in Transition Conference at MIT on Oct. 8, 1999 (accessed on Sep. 8, 2011).
gamecubicle.com News Article, Nintendo WaveBird Controller, http://www.gamecubicle.com/news-Nintendo_gamecube_wavebird_controller.htm, May 14, 2002 (accessed on Aug. 5, 2011).
Geen, et al., "New iMEMS® Angular-Rate-Sensing Gyroscope," Analog Dialogue 37-03, pp. 12-14 (2003).
Gelmis, J., "Ready to Play, The Future Way," Buffalo News, Jul. 23, 1996 (accessed from LexisNexis research database on Sep. 6, 2011).
Grimm, et al., "Real-Time Hybrid Pose Estimation from Vision and Inertial Data," Proceedings of the First Canadian Conference on Computer and Robot Vision (CRV'04), IEEE Computer Society (Apr. 2004).
Gyration Ultra Cordless Optical Mouse, Setting Up Ultra Mouse, Gyration Quick Start Card part No. DL-00071-0001 Rev. A. Gyration, Inc., Jun. 2003.
Gyration Ultra Cordless Optical Mouse, User Manual, Gyration, Inc., Saratoga, CA (2003).
Gyration, "Gyration MicroGyro 100 Developer Kit Data Sheet," http://web.archive.org/web/19980708122611/www.gyration.com/html/devkit.ht- ml (Jul. 1998).
Gyration, Inc., GyroRemote GP240-01 Professional Series (Sep. 2003).
Harada, et al., "Portable Absolute Orientation Estimation Device with Wireless Network Under Accelerated Situation" Proceedings of the 2004 IEEE International Conference on Robotics & Automation, New Orleans, LA, Apr. 2004, pp. 1412-1417(Apr. 2004).
Harada, et al., "Portable orientation estimation device based on accelerometers, magnetometers and gyroscope sensors for sensor network," Proceedings of IEEE International Conference on Multisensor Fusion and Integration for Intelligent Systems (MFI 2003), pp. 191-196, (Aug. 2003).
Haykin, et al., "Adaptive Tracking of Linear Time-Variant Systems by Extended RLS Algorithms, IEEE Transactions on Signal Processing," vol. 45, No. 5, pp. 1118-1128 (May 1997).

(56) **References Cited**

OTHER PUBLICATIONS

Heath, "Virtual Reality Resource Guide AI Expert," v9 n5 p32(14) (May 1994) (accessed at http://ftp.hitl.washington.edu/scivw-ftp/commercial/VR-Resource-Guide.txt on Jun. 17, 2010).
HiBall-3100—"Wide-Area, High-Precision Tracker and 3D Digitizer," www.3rdtech.com/HiBall.htm (accessed on Jul. 29, 2011).
Hinckley, "Synchronous Gestures for Multiple Persons and Computers," Paper presented at ACM UIST 2003 Symposium on User Interface Software & Technology in Vancouver, BC, Canada (Nov. 2003).
Hinckley, et al., "A Survey of Design Issues in Spatial Input," Paper presented at 7th Annual ACM Symposium on User Interface Software and Technology (Nov. 1994).
Hinckley, et al., "Sensing Techniques for Mobile Interaction," Proceedings of the 13th Annual ACM Symposium on User Interface Software and Technology (ACM UIST), San Diego, CA, (Nov. 2000).
Hinckley, et al., "The VideoMouse: A Camera-Based Multi-Degree-of-Freedom Input Device" ACM UIST'99 Symposium on User Interface Software & Technology, CHI Letters vol. 1 No. 1, pp. 103-112 (Sep. 1999).
Hinckley, Ken, "Haptic Issues for Virtual Manipulation," Ph.D. Dissertation University of Virginia, Dept. of Computer Science (Jan. 1997).
Hind, Nicholas, "Cosmos: A composition for Live Electronic Instruments Controlled by the Radio Baton and Computer Keyboard (Radio Baton and Magic Glove)," A Final Project Submitted to the Department of Music of Stanford University in Partial Fulfillment of the Requirements for the Degree of Doctor Musical Arts/UMI Microform 9837187, Jan. 1998.
Hoffman, Hunter G., "Physically Touching Virtual Objects Using Tactile Augmentation Enhances the Realism of Virtual Environments," IEEE Virtual Reality Annual International Symposium '98, Atlanta, Georgia, Mar. 14-18, 1998, 5 pages (Mar. 1998).
Hogue, Andrew, "MARVIN: A Mobile Automatic Realtime visual and Inertial tracking system," Master's Thesis, York University (May 2003), available at http://www.cse.yorku.ca/~hogue/marvin.pdf.
Holden, Maureen K. et al., "Use of Virtual Environments in Motor Learning and Rehabilitation," Department of Brain and Cognitive Sciences, Handbook of Virtual Environments: Design, Implementation, and Applications, Chap. 49, pp. 999-1026, Stanney (ed), Lawrence Erlbaum Associates (Jan. 2002).
Holloway, Richard Lee, "Registration Errors in Augmented Reality Systems," Ph.D. Dissertation, University of North Carolina at Chapel Hill, Dept. of Computer Science (1995).
Immersion CyberGlove product, Immersion Corporation, http://www.cyberglovesystem.com (Jul. 2001).
Immersion, "Immersion Ships New Wireless CyberGlove(R) II Hand Motion-Capture Glove; Animators, Designers, and Researchers Gain Enhanced Efficiency and Realism for Animation, Digital Prototyping and Virtual Reality Projects," Business Wire, Dec. 7, 2005 (available at http://ir.immersion.com/releasedetail.cfm?releaseid=181278).
Interfax Press Release, "Tsinghua Tongfang Releases Unique Peripheral Hardware for 3D Gaming," Apr. 2002, 1 page. (Apr. 2002).
Intersense, "InterSense InertiaCube2 Devices," (Specification) (image) (2001).
Intersense, "InterSense InertiaCube2 Manual for Serial Port Model" (2001).
Intersense, "IS-900 Product Technology Brief," http://www.intersense.com/uploadedFiles/Products/White.sub.--Papers/IS900-.sub.--Tech.sub.--Overview.sub.--Enhanced.pdf (1999).
Intersense, "InterSense Inc., The New Standard in Motion Tracking," Mar. 27, 2004, http://web.archive,org!web12004040500550Z/http://intersense.com (accessed on May 19, 2009).
Intersense, "InterSense Mobile Mixed Reality Demonstration," YouTube Video dated Oct. 2006 on opening screen; uploaded by InterSenseInc. on Mar. 14, 2008 (accessed at http://www.youtube.com/watch?v=daVdzGKOnUE&feature=channel_page on Sep. 8, 2011; digital copy of video available upon request).
Intersense, "IS-900 Precision Motion Trackers," Jun. 14, 2002, http://web.archive.org/web/20020614110352/http://www.isense.com/products/prec/is900/ (accessed on Sep. 8, 2011).
Intersense, Inc., "Comparison of Intersense IS-900 System and Optical Systems," Whitepaper, Jul. 12, 2004., available at http://www.jazdtech.com/techdirect/research/InterSense-Inc.htm?contentSetId=60032939&supplierId=60018705.
Jacob, "Human-Computer Interaction—Input Devices," ACM Computing Surveys, vol. 28, No. 1, pp. 177-179 (Mar. 1996); link to text of article provided at http://www.cs.tufts.edu/~jacob/papers/.
Jakubowski, et al., "Increasing Effectiveness of Human Hand Tremor Separation Process by Using Higher-Order Statistics," Measurement Science Review, vol. 1, No. 1 (2001).
Ji, H. "Study on the Infrared Remote-Control Lamp-Gesture Device," Yingyong Jiguang/Applied Laser Technology, v. 17, n. 5, p. 225-227, Language: Chinese-Abstract only, Oct. 1997.
Jiang, "Capacitive position-sensing interface for micromachined inertial sensors," Dissertation at Univ. of Cal. Berkeley, 2003.
Ju, et al., "The Challenges of Designing a User Interface for Consumer Interactive Television Consumer Electronics Digest of Technical Papers.," IEEE 1994 International Conference on Volume, Issue, Jun. 21-23, 1994 pp. 114-115 (Jun. 1994) (downloaded from IEEE Xplore on Jul. 13, 2010).
Keir, et al., "Gesture-recognition with Nonreferenced Tracking," IEEE Symposium on 3D User Interfaces, pp. 151-158, Mar. 25-26, 2006.
Kennedy, P.J. "Hand-held Data Input Device," IBM Technical Disclosure Bulletin, vol. 26, No. 11, pp. 5826-5827, Apr. 1984.
Kessler, et al., "The Simple Virtual Environment Library: an Extensible Framework for Building VE Applications," Presence, MIT Press vol. 9, No. 2. pp. 187-208 (Apr. 2000).
Kindratenko, "A Comparison of the Accuracy of an Electromagnetic and a Hybrid Ultrasound-Inertia Position Tracking System," MIT Presence, vol. 10, No. 6, pp. 657-663, Dec. 2001.
Klein et al., "Tightly Integrated Sensor Fusion for Robust Visual Tracking," British Machine Vision Computing, vol. 22, No. 10, pp. 769-776, Feb. 2004.
Kohlhase, "NASA Report, The Voyager Neptune travel guide," Jet Propulsion Laboratory Publication 89-24, (Jun. 1989).
Kormos, D.W., et al., "Intraoperative, Real-Time 3-D Digitizer for Neurosurgical Treatment and Planning," IEEE (Feb. 1993) (Abstract only).
Kosak, Dave, "Mind-Numbing New Interface Technologies," Gamespy.com, Feb. 1, 2005 (accessed at http://www.gamespy.com/articles/584/584744p1.html on Aug. 31, 2011).
Krumm et al., "How a Smart Environment can Use Perception," Paper presented at UBICOMP 2001 Workshop on Perception for Ubiquitous Computing (2001).
Kuipers, Jack B., "SPASYN—An Electromagnetic Relative Position and Orientation Tracking System," IEEE Transactions on Instrumentation and Measurement, vol. 29, No. 4, pp. 462-466 (Dec. 1980).
Kunz, Andreas M. et al., "Design and Construction of a New Haptic Interface," Proceedings of DETC '00, ASME 2000 Design Engineering Technical Conferences and Computers and Information in Engineering Conference, Baltimore, Maryland, Sep. 10-13, 2000.
La Scala, et al., "Design of an Extended Kalman Filter Frequency Tracker," IEEE Transactions on Signal Processing, vol. 44, No. 3 (Mar. 1996).
Laughlin, et al., "Inertial Angular Rate Sensors: Theory and Applications," SENSORS Magazine Oct. 1992.
Lee, et al., "Innovative Estimation Method with Measurement Likelihood for all-Accelerometer Type Inertial Navigation System," IEEE Transactions on Aerospace and Electronic Systems, vol. 38, No. 1, Jan. 2002.
Lee, et al., "Tilta-Pointer: the Free-Space Pointing Device," Princeton COS 436 Project (Fall 2004); retrieved from Google's cache of http://www.milyehuang.com/cos436/project/specs.html on May 27, 2011.

(56) **References Cited**

OTHER PUBLICATIONS

Lee, et al., "Two-Dimensional Position Detection System with MEMS Accelerometer for Mouse Applications," Design Automation Conference, 2001, Proceedings, 2001 pp. 852-857, Jun. 2001.
Leganchuk, et al., "Manual and Cognitive Benefits of Two-Handed Input: An Experimental Study," ACM Transactions on Computer-Human Interaction, vol. 5, No. 4, pp. 326-259, Dec. 1998.
Liang, et al., "On Temporal-Spatial Realism in the Virtual Reality Environment," ACM 1991 Symposium on User Interface Software and Technology (Nov. 1991).
Link, "Field-Qualified Silicon Accelerometers from 1 Milli g to 200,000 g," Sensors, Mar. 1993.
Liu, et al., "Enhanced Fisher Linear Discriminant Models for Face Recognition," Paper presented at 14th International Conference on Pattern Recognition (ICPR'98), Queensland, Australia (Aug. 1998).
Lobo, et al., "Vision and Inertial Sensor Cooperation Using Gravity as a Vertical Reference," IEEE Trans. on Pattern Analysis and Machine Intelligence, vol. 25, No. 12, pp. 1597-1608, Dec. 2003.
Logitech, "Logitech Tracker—Virtual Reality Motion Tracker," downloaded from http://www.vrealities.com/logitech.html on Jun. 18, 2010.
Logitech, Inc. "3D Mouse & Head Tracker Technical Reference Manual," Nov. 1992.
Logitech's WingMan Cordless RumblePad Sets PC Gamers Free, Press Release, Sep. 2, 2001 (accessed at http://www.logitech.com/en-us/172/1373 on Aug. 5, 2011).
Louderback, J. "Nintendo Wii", Reviews by PC Magazine, Nov. 13, 2006 (accessed at http://www.pcmag.com/article/print/193909 on Sep. 8, 2011).
Luethi, P. et al., "Low Cost Inertial Navigation System" (2000); downloaded from http://www.electronic -engineering.ch/study/ins/ins.html on Jun. 18, 2010.
Luinge, "Inertial sensing of human movement," Thesis, University of Twente, Twente University Press, (Oct. 2002).
Luinge, et al., "Estimation of orientation with gyroscopes and accelerometers," Proceedings of the First Joint BMES/EMBS Conference, 1999, vol. 2, p. 844 (Oct. 1999).
MacKenzie, et al., "A two-ball mouse affords three degrees of freedom," Extended Abstracts of the CHI '97 Conference on Human Factors in Computing Systems, pp. 303-304. New York: ACM (Oct. 1997).
MacKinlay, "Rapid Controlled Movement Through a Virtual 3D Workspace," ACM SIGGRAPH Computer Graphics archive, vol. 24, No. 4, pp. 171-176 (Aug. 1990).
MacLean, "Designing with Haptic Feedback", Paper presented at IEEE Robotics and Automation (ICRA '2000) Conference in San Francisco, CA, Apr. 22-28, 2000.
Maggioni, C., "A novel gestural input device for virtual reality," IEEE Virtual Reality Annual International Symposium (Cat. No. 93CH3336-5), 118-24, Jan. 1993.
Marks, Richard (Jan. 21, 2004) (Windows Media v7). EyeToy: A New Interface for Interactive Entertainment, Stanford University (accessed at http://lang.stanford.edu/courses/ee380/2003-2004/040121-ee380-100.wmv on Sep. 7, 2011; digital copy of video available upon request).
Marrin, "Possibilities for the Digital Baton as a General Purpose Gestural Interface," Late-Breaking/Short Talks, Paper presented at CHI 97 Conference in Atlanta Georgia, Mar. 22-27, 1997 (accessed at http://www.sigchi.org/chi97/proceedings/short-talk/tm.htm on Aug. 5, 2011).
Marrin, Teresa et al., "The Digital Baton: A Versatile Performance Instrument," Paper presented at International Computer Music Conference, Thessaloniki, Greece (Sep. 1997) (text of paper available at http://quod.lib.umich.edu/cgi/p/pod/dod-idx?c=icmc;idno=bbp2372.1997.083).
Marti, et al., "Biopsy navigator: a smart haptic interface for interventional radiological gestures" Proceedings of the Computer Assisted Radiology and Surgery (CARS 2003) Conference, International Congress Series, vol. 1256, pp. 788-793 (Jun. 2003) (text of paper available at http://infoscience.epfl.ch/record/29966/files/CARS03-GM.pdf).
Masliah, "Measuring the Allocation of Control in 6 Degree of Freedom Docking Experiment," Paper presented at SIGCHI Conference on Human Factors in Computing Systems, The Hague, Netherlands (Apr. 2000).
Maybeck, "Stochastic Models, Estimation and Control," vol. 1, Chapter 1, Introduction (1979).
Merians, et al., "Virtual Reality-Augmented Rehabilitation for Patients Following Stroke," Physical Therapy, vol. 82, No. 9, Sep. 2002.
Merrill, "FlexiGesture: A sensor-rich real-time adaptive gesture and affordance learning platform for electronic music control," Thesis, Massachusetts Institute of Technology, Jun. 2004.
Meyer, et al., "A Survey of Position Tracker," MIT Presence, vol. 1, No. 2, pp. 173-200, (Nov. 1992).
Miller, Paul, "Exclusive shots of Goschy's prototype 'Wiimote' controllers," Engadget, Jan. 15, 2008 (accessed at http://www.engadget.com/2008/01/15/exclusive-shots-of-goschys-prototype-wiimote-controllers/ on Aug. 31, 2011).
Miller, Ross, "Joystiq interview: Patrick Goschy talks about Midway, tells us he 'made the Wii'," Joystiq.com, Jan. 16, 2008 (accessed at http://www.joystiq.com/2008/01/16/joystiq-interview-patrick-goschy-talks-about-midway-tells-us-h/ on Aug. 31, 2011).
Mizell, "Using Gravity to Estimate Accelerometer Orientation," Proceedings of the Seventh IEEE International Symposium on Wearable Computers (ISWC '03), IEEE Computer Society (Oct. 2003).
Morgan, C., "Still chained to the overhead projector instead of the podium," (TV Interactive Corp's LaserMouse Remote Pro infrared mouse) (clipboard) (brief article) (product announcement) Government Computer News, Jun. 13, 1994.
Morris, "Accelerometry—a technique for the measurement of human body movements," J Biomechanics vol. 6, pp. 729-736 (Nov. 1973).
Moser, "Low Budget Inertial Navigation Platform (2000)," www.tmoser.ch/typo3/11.0.html (accessed on Jul. 29, 2011).
Mulder, "Human movement tracking technology," Technical Report, NSERC Hand Centered Studies of Human Movement project, available through anonymous ftp in fas.sfu.ca:/pub/cs/graphics/vmi/HMTT.pub.ps.Z., Burnab, B.C, Canada: Simon Fraser University (Jul. 1994).
Myers, et al., "Interacting at a Distance: Measuring the Performance of Laser Pointers and Other Devices," CHI 2002, Apr. 2002.
Naimark, et al., "Encoded LED System for Optical Trackers," Paper presented at Fourth IEEE and ACM International Symposium on Mixed and Augmented Reality (ISMAR 2005), Oct. 5-8, 2005, Vienna Austria (2005) (electronic version of text of paper available for download at http://www.intersense.com/pages/44/129/).
Naimark, et al., "Circular Data Matrix Fiducial System and Robust Image Processing for a Wearable Vision-Inertial Self-Tracker," IEEE International Symposium on Mixed and Augmented Reality (ISMAR 2002), Darmstadt, Germany (Sep./Oct. 2002).
Navarrette, et al., "Eigenspace-based Recognition of Faces: Comparisons and a new Approach," Paper Presented at 11th International Conference on Image Analysis and Processing (Sep. 2001).
New Strait Times Press Release, "Microsoft's New Titles," Mar. 1998, 1 page.
News Article, "New Game Controllers Using Analog Devices' G-Force Tilt to be Featured at E3", Norwood, MA (May 10, 1999) (accessed at http://www.thefreelibrary.com/_/print/PrintArticle.aspx?id=54592268 on Jun. 17, 2010).
Nintendo Tilt Controller Ad, Electronic Gaming Monthly, 1994, 1 page.
Nintendo, Game Boy Advance SP System Instruction Booklet (2003).
Nintendo, Nintendo Game Boy Advance System Instruction Booklet (2001-2003).
Nintendo, Nintendo Game Boy Advance Wireless Adapter, Sep. 26, 2003.

(56) **References Cited**

OTHER PUBLICATIONS

Nishiyama, "A Nonlinear Filter for Estimating a Sinusoidal Signal and its Parameters in White Noise: On the Case of a Single Sinusoid," IEEE Transactions on Signal Processing, vol. 45, No. 4, pp. 970-981 (Apr. 1997).
Nishiyama, "Robust Estimation of a Single Complex Sinusoid in White Noise-H∞ Filtering Approach," IEEE Transactions on Signal Processing, vol. 47, No. 10, pp. 2853-2856 (Oct. 1999).
Odell, "An Optical Pointer for Infrared Remote Controllers," (1995) (downloaded from IEEE Xplore on Jul. 7, 2010).
Ojeda, et al., "No GPS? No Problem!" University of Michigan Develops Award-Winning Personal Dead-Reckoning (PDR) System for Walking Users, available at http://www.engin.umich.edu/research/mrl/urpr/In_Press/P135.pdf, (2004 or later).
Omelyan, "On the numerical integration of motion for rigid polyatomics: The modified quaternion approach" Computers in Physics, vol. 12 No. 1, pp. 97-103 (Jan./Feb. 1998).
Ovaska, "Angular Acceleration Measurement: A Review," Paper presented at IEEE Instrumentation and Measurement Technology Conference, St. Paul, MN, May 18-21, 1998.
Pai, et al., "The Tango: A Tangible Tangoreceptive Whole-Hand Interface," Paper presented at Joint Eurohaptics and IEEE Symposium on Haptic Interfaces for Virtual Environment and Teleoperator Systems, Pisa, Italy, Mar. 18-20, 2005.
Pajama Sam: No Need to Hide When It's Dark Outside Infogames, Sep. 6, 2002.
Paley, W. Bradford, "Interaction in 3D Graphics," SIGGRAPH Computer Graphics Newsletter, col. 32, No. 4 (Nov. 1998) (accessed at http://www.siggraph.org/publications/newsletter/v32n4/contributions/paley.html on Aug. 2, 2011).
Paradiso, et al., "Interactive Therapy with Instrumented Footwear," CHI 2004, Apr. 24-29, 2004, Vienna, Austria.
Park, Adaptive control strategies for MEMS gyroscopes (Dissertation), Univ. Cal. Berkley (Dec. 2000).
PC World, "The 20 Most Innovative Products of the Year," Dec. 27, 2006 (accessed at http://www.pcworld.com/printable/article/id,128176/printable.html on Aug. 2, 2011).
PCTracker, Technical Overview, available at http://www.est-kl.com/fileadmin/media/pdf/InterSense/PCTracker_Tech_Overview.pdf (date unknown).
Perry, Simon, "Nintendo to Launch Wireless Game Boy Adaptor," Digital Lifestyles, http://digital-lifestyles.info/2003/09/26/Nintendo-to-launch-wireless-game-boy-adaptor/, Sep. 26, 2003 (accessed on Jul. 29, 2011).
Phillips, "Forward/Up Directional Incompatibilities During Cursor Placement Within Graphical User Interfaces," Ergonomics, vol. 48, No. 6, May 15, 2005.
Phillips, "LPC2104/2105/2106, Single-chip 32-bit microcontrollers; 128 kB ISP/IAP Flash with 64 kB/32 kB/16 kB RAM," 32 pages, Dec. 22, 2004.
Phillips, "TECHWATCH: On the Right Track: A unique optical tracking system gives users greater freedom to explore virtual worlds," Computer Graphics World, vol. 23, Issue 4 (Apr. 2000).
Pierce, et al., "Image Plane Interaction Techniques in 3D Immersive Environments," Paper presented at 1997 symposium on Interactive 3D graphics, Providence, RI (Apr. 1997).
Pilcher, "AirMouse Remote Controls," IEEE Conference on Consumer Electronics (Jun. 1992).
Pique, "Semantics of Interactive Rotations," Interactive 3D Graphics, Proceedings of the 1986 workshop on Interactive 3D graphics, pp. 259-269 (Oct. 1986).
Piyabongkarn, "The Development of a MEMS Gyroscope for Absolute Angle Measurement," Dissertation, Univ. Minnesota, Nov. 2004 (Abstract only).
Polhemus, "Polhemus 3Space Fastrak devices" (image) (2001).
PowerGlove product Program Guide, Mattel, 1989 (Text of Program Guide provided from http://hiwaay.net/~lkseitz/cvtg/power_glove.shtml; the text was typed in by Lee K. Sietz; document created Aug. 25, 1988; accessed on Aug. 2, 2011).
PR Newswire, "Five New Retailers to Carry Gyration's Gyropoint Point and Gyropoint Pro," Jul. 8, 1996 (accessed at http://www.thefreelibrary.com/_/print/PrintArticle.aspx?id=54592268 on Jun. 18, 2010).
PR Newswire, "Three-Axis MEMS-based Accelerometer From STMicroelectronics Targets Handheld Terminals," Feb. 18, 2003 (accessed at http://www.thefreelibrary.com/_/print/PrintArticle.aspx?id=54592268 on Aug. 3, 2011).
Pryor, et al., "A Reusable Software Architecture for Manual Controller Integration," IEEE Conf. on Robotics and Automation, Univ of Texas, pp. 3583-3588 (Apr. 1997).
Raab, et al., "Magnetic Position and Orientation Tracking System," IEEE Transactions on Aerospace and Electronic Systems, vol. AES-15, No. 5, pp. 709-718 (Sep. 1979).
Radica Legends of the Lake™ Instruction Manual (2003).
Regan, "Smart Golf Clubs," baltimoresun.com, Jun. 17, 2005.
Rekimoto, "Tilting Operations for Small Screen Interfaces," Tech Note presented at 9th Annual ACM Symposium on User Interface Software and Technology (UIST'96) (Nov. 1996) (available for download at http://www.sonycsl.co.jp/person/rekimoto/papers/uist96.pdf.
Response filed May 3, 2010 to Office Action dated Feb. 5, 2010 for U.S. Appl. No. 12/222,787, filed Aug. 15, 2008, now U.S. Pat. No. 7,774,155 (including Rule 1.132 Declaration by Steve Mayer).
Reunert, "Fiber-Optic Gyroscopes: Principles and Applications," SENSORS, Aug. 1993, pp. 37-38.
Ribo, et al., "Hybrid Tracking for Outdoor Augmented Reality Applications," IEEE Computer Graphics and Applications, vol. 22, No. 6, pp. 54-63, Nov./Dec. 2002.
Riviere, et al., "Adaptive Canceling of Physiological Tremor for Improved Precision in Microsurgery," IEEE Transactions on Biomedical Engineering, vol. 45, No. 7, pp. 839-846 (Jul. 1998).
Roberts, "The Lincoln Wand," 1966 Proceedings of the Fall Joint Computer Conference (1966), available for electronic download at http://www.computer.org/portal/web/csdl/doi/10.1109/AFIPS, Apr. 1966, 105.
Robinette, et al., "Implementation of Flying, Scaling, and Grabbing in Virtual Worlds," ACM Symposium (Jun. 1992).
Robinette et al., "The Visual Display Transformation for Virtual Reality," University of North Carolina at Chapel Hill (Sep. 1994).
Roetenberg, "Inertial and magnetic sensing of human motion," Thesis, University of Twente (May 2006).
Roetenberg, et al., "Inertial and Magnetic Sensing of Human Movement Near Ferromagnetic Materials," Paper presented at Second IEEE and ACM International Symposium on Mixed and Augmented Reality, Mar. 2003 (available at http://www.xsens.com/images/stories/PDF/Inertial%20and%20and%20magnetic%20sensing%20of%20human%20movement%20near-%20ferromagnetic%20materials.pdf.
Rolland, et al., "A Survey of Tracking Technology for Virtual Environments," University of Central Florida, Center for Research and Education in Optics Lasers (CREOL) (Jan. 2001).
Romer, Kay et al., Smart Playing Cards: A Ubiquitous Computing Game, Personal and Ubiquitous Computing, Dec. 2002, vol. 6, Issue 5-6, pp. 371-377, London, England.
Rothman, Wilson, "Unearthed: Nintendo's Pre-Wiimote Prototype," gizmodo.com, Aug. 29, 2007 (accessed at http://gizmodo.com/gadgets/exclusive/unearthed-nintendo-2001-prototype-motion+sensing-one+handed-controller-by-gyration-294642.php on Aug. 31, 2011).
Rothman, Wilson, "Wii-mote Prototype Designer Speaks Out, Shares Sketchbook," Gizmodo.com, Aug. 30, 2007 (accessed at http://gizmodo.com/gadgets/exclusive/wii+mote-prototype-designer-speaks-out-shares-sketchbook-295276.php on Aug. 31, 2011).
Sakai, et al., "Optical Spatial Filter Sensor for Ground Speed," Optical Review, vol. 2, No. 1, pp. 65-67 (Jan. 1995).
Santiago, Alves, "Extended Kalman filtering applied to a full accelerometer strapdown inertial measurement unit," M.S. Thesis, Massachusetts Institute of Technology, Dept. of Aeronautics and Astronautics, Santiago (Sep. 1992).
Satterfield, Shane, "E3 2002: Nintendo announces new GameCube games," GameSpot, http://www.gamespot.com/gamecube/action/

(56) **References Cited**

OTHER PUBLICATIONS

rollorama/news/2866974/e3-2002-nintendo-announces-new-gamecube-games, May 21, 2002 (accessed on Aug. 11, 2011).
Sawada, et al., "A Wearable Attitude-Measurement System Using a Fiberoptic Gyroscope," MIT Presence, vol. 11, No. 2, pp. 109-118, Apr. 2002.
Saxena, et al., "In Use Parameter Estimation of Inertial Sensors by Detecting Multilevel Quasi-Static States," Berlin: Springer-Verlag, pp. 595-601 (2005).
Sayed, "A Framework for State-Space Estimation with Uncertain Models," IEEE Transactions on Automatic Control, vol. 46, No. 7, Jul. 2001.
Schofield, Jack, et al., Games reviews, "Coming up for airpad," The Guardian (Feb. 3, 2000) (accessed at http://www.guardian.co.uk/technology/2000/feb/03/online supplement5/print on Jun. 18, 2010).
Sega/Sports Sciences, Inc., "Batter Up, It's a Hit," Instruction Manual, Optional Equipment Manual (1994).
Sega/Sports Sciences, Inc., "Batter Up, It's a Hit," Photos of baseball bat (1994).
Selectech Airmouse, "Mighty Mouse", Electronics Today International, p. 11 (Sep. 1990).
Shoemake, Ken, "Quaternions," available online at http://campar.in.tum.de/twiki/pub/Chair/DwarfTutorial/quatut.pdf (date unknown).
Skiens, Mike, "Nintendo Announces Wireless GBA Link", Bloomberg, Sep. 25, 2003 (accessed at http://www.nintendoworldreport.com/news/9011).
Smartswing, "SmartSwing: Intelligent Golf Clubs that Build a Better Swing," http://web.archive.org/web/20040728221951/http://www.smartswinggolf.com/ (accessed on Sep. 8, 2011).
Smartswing, "The SmartSwing Learning System Overview," Apr. 26, 2004, http://web.archive.org/web/2004426215355/http://www.smartswinggolf.com/tls/index.html (accessed on Jul. 29, 2011).
Smartswing, "The SmartSwing Learning System: How it Works," 3 pages, Apr. 26, 2004, http://web.archive.org/web/20040426213631/http://www.smartswinggolf.com/tls/how_it_works.html (accessed on Jul. 29, 2011).
Smartswing, "The SmartSwing Product Technical Product: Technical Information," Apr. 26, 2004, http://web.archive.org/web/20040426174854/http://www.smartswinggolf.com/products/technical_info.html (accessed on Jul. 29, 2011).
Smartswing, Training Aid, Austin, Texas, Apr. 2005.
Sorenson, et al., "The Minnesota Scanner: A Prototype Sensor for Three-Dimensional Tracking of Moving Body Segments," IEEE Transactions on Robotics and Animation, vol. 5, No. 4 (Aug. 1989).
Star Wars Action Figure with CommTech Chip by Hasbro (1999).
Stars Wars Episode 1 CommTech Reader Instruction Manual (1998).
Stovall, "Basic Inertial Navigation," NAWCWPNS TM 8128, Navigation and Data Link Section, Systems Integration Branch (Sep. 1997).
Sulic, "Logitech Wingman Cordless Rumblepad Review," Gear Review at IGN, Jan. 14, 2002 (accessed at http://gear.ign.com/articles/317/317472p1.html on Aug. 1, 2011).
Sutherland, "A Head-Mounted Three Dimensional Display," Paper presented at AFIPS '68 Fall Joint Computer Conference, Dec. 9-11, 1968; available at www.cise.ufl.edu/~lok/teaching/dcvef05/papers/sutherland-headmount.pdf.
Sutherland, Ivan E., "Sketchpad: A Man-Machine Graphical Communication System," Proceedings of the AFIPS Spring Joint Computer Conference, Detroit, Michigan, May 21-23, 1963, pp. 329-346 (source provided is reprinting of text accessed at http://www.guidebookgallery.org/articles/sketchpadamanmachinegraphicalcommunicationsystem on Sep. 8, 2011).
Tech Designers Rethink Toys: Make Them Fun Wall Street Journal, Dec. 17, 2001.
Templeman, James N., "Virtual Locomotion: Walking in Place through Virtual Environments," Presence, vol. 8, No. 6, pp. 598-617, Dec. 1999.
Timmer, "Modeling Noisy Time Series: Physiological Tremor," International Journal of Bifurcation and Chaos, vol. 8, No. 7 (1998).
Timmer, et al., "Characteristics of Hand Tremor Time Series," Biological Cybernetics, vol. 70, No. 1, pp. 75-80 (May 1993).
Timmer, et al., "Cross-Spectral Analysis of Tremor Time Series," International Journal of Bifurcation and Chaos, vol. 10, No. 11 pp. 2595-2610 (Nov. 2000); text available at http://www.fdmold.uni-freiburg.de/groups/timeseries/tremor/pubs/cs_review.pdf.
Timmer, et al., "Pathological Tremors: Deterministic Chaos or Nonlinear Stochastic Oscillators?" Chaos, vol. 10, No. 1 pp. 278-288 (Mar. 2000).
Timmer, et al., Cross-Spectral Analysis of Physiological Tremor and Muscle Activity: II Application to Synchronized Electromyogram, Biological Cybernetics, vol. 78 (Jun. 1998) (obtained from http://arxiv.org/abs/chao-dyn/9805012).
Titterton, et al., "Strapdown Inertial Navigation Technology," Peter Peregrinus Ltd., pp. 1-56 and pp. 292-321 (May 1997).
Toy Designers Use Technology in New Ways as Sector Matures, WSJ.com, Dec. 17, 2001.
Traq 3D, "Healthcare," http: //www.traq3d.com/Healthcare/Healthcare.aspx (accessed on Jan. 21, 2010).
Ulanoff, Lance, "Nintendo's Wii is the Best Product Ever," PC Magazine, Jun. 21, 2007 (accessed at http://www.pcmag.com/print_article2/0,1217,a=210070,00.asp?hidPrint=true on Aug. 1, 2011).
UNC Computer Science Department, "News & Notes from Sitterson Hall," UNC Computer Science, Department Newsletter, Issue 24, Spring 1999 (Apr. 1999) (accessed at http://www.cs.unc.edu/NewsAndNotes/Issue24/ on Jun. 18, 2010).
Urban, "BAA 96-37 Proposer Information," DARPA/ETO (1996) (accessed at http://www.fbodaily.com/cbd/archive/1996/08(August)/19-Aug-1996/Aso1001.htm on Jul. 27, 2010).
US Dynamics Corp, "Spinning Mass Mechanical Gyroscopes," Aug. 2006.
US Dynamics Corp, "The Concept of 'Rate', (more particularly, angular rate pertaining to rate gyroscopes) (rate gyro explanation)," Aug. 2006.
US Dynamics Corp, "US Dynamics Model 475 Series Rate Gyroscope Technical Brief," Dec. 2005.
US Dynamics Corp, "US Dynamics Rate Gyroscope Interface Brief (rate gyro IO)" Aug. 2006.
Van Den Bogaard, Thesis, "Using linear filters for real-time smoothing of rotational data in virtual reality application," dated Aug. 2, 2004, available at http://www.science.uva.nl/research/ias/alumni/m.sc.theses/theses/RobvandenBogaarad.pdf.
Van Laerhoven et al., "Using an Autonomous Cube for Basic Navigation and Input," Proceedings of the 5th International Conference on Multimodal interfaces, Vancouver, British Columbia, Canada, pp. 203-210, Nov. 5-7, 2003.
Van Rheeden, et al., "Noise Effects on Centroid Tracker Aim Point Estimation," IEEE Trans. on Aerospace and Electronic Systems, vol. 24, No. 2, pp. 177-185 (Mar. 1988).
Vaz, et al., "An Adaptive Estimation of Periodic Signals Using a Fourier Linear Combiner," IEEE Transactions on Signal Processing, vol. 42, No. 1, pp. 1-10 (Jan. 1994).
Verplaetse, "Inertial-Optical Motion-Estimating Camera for Electronic Cinematography," Masters Thesis, MIT, Media Arts and Sciences (Jun. 1997).
Villoria, Gerald, "Hands on Roll-O-Rama Game Cube," Game Spot, http://www.gamespot.com/gamecube/action/rollorama/news.html?sid=2868421&com_act=convert&om_clk=newsfeatures&tag=newsfeatures;title;1&m, May 29, 2002 (accessed on Jul. 29, 2011).
Virtual Fishing, Operational Manual, 2 pages, Tiger Electronics, Inc. (1998).
Vorozcovs, et al., "The Hedgehog: A Novel Optical Tracking Method for Spatially Immersive Displays," MIT Presence, vol. 15, No. 1, pp. 108-121, Feb. 2006.
VTI, Mindflux-Vti CyberTouch, http://www.mindflux.com/au/products/vti/cybertouch.html (1996).

(56) **References Cited**

OTHER PUBLICATIONS

Wang, et al., "Tracking a Head-Mounted Display in a Room-Sized Environment with Head-Mounted Cameras," Paper presented at SPIE 1990 Technical Symposium on Optical Engineering and Photonics in Aerospace Sensing (Apr. 1990).
Ward, et al., "A Demonstrated Optical Tracker With Scalable Work Area for Head-Mounted Display Systems," Paper presented at 1992 Symposium on Interactive 3D Graphics (Mar. 1992).
Watt, Alan, 3D Computer Graphics, Chapter 1: "Mathematical fundamentals of computer graphics," 3rd ed. Addison-Wesley, pp. 1-26 (Dec. 2000).
Welch, "Hawkeye Zooms in on Mac Screens with Wireless Infrared Penlight Pointer," MacWeek, May 3, 1993 (excerpt of article accessed at http://www.accessmylibrary.com/article/print/1G1-13785387 on Jun. 18, 2010).
Welch, et al., "High-Performance Wide-Area Optical Tracking: The HiBall Tracking System," MIT Presence: Teleoperators & Virtual Environments (Feb. 2001).
Welch, et al., "SCAAT: Incremental Tracking with Incomplete Information," Paper presented at SIGGRAPH 97 Conference on Computer Graphics and Interactive Techniques (Aug. 1997), available at http://www.cs.unc.edu/~welch/media/pdf/scaat.pdf.
Welch, et al., "The HiBall Tracker: High-Performance Wide-Area Tracking for Virtual and Augmented Environments," Paper presented at 1999 Symposium on Virtual Reality Software and Technology in London, Dec. 20-22, 1999, available at http://www.cs.unc.edu/~welch/media/pdf/VRST99_HiBall.pdf.
Welch, et al., "Complementary Tracking and Two-Handed Interaction for Remote 3D Medical Consultation with a PDA," Paper presented at Trends and Issues in Tracking for Virtual Environments Workshop at IEEE Virtual Reality 2007 Conference (Mar. 2007), available at http://www.cs.unc.edu/~welch/media/pdf/Welch2007_TwoHanded.pdf.
Welch, et al., "Motion Tracking: No Silver Bullet, but a Respectable Arsenal," IEEE Computer Graphics and Applications, vol. 22, No. 6, pp. 24-38 (Nov./Dec. 2002), available at http://www.cs.unc.edu/~tracker/media/pdf/cga02_welch_tracking.pdf.
Welch, Hybrid Self-Tracker: An Inertial/Optical Hybrid Three-Dimensional Tracking System, University of North Carolina Chapel Hill Department of Computer Science, TR 95-048 (1995).
Widrow, et al., "Fundamental Relations Between the LMS Algorithm and the DFT," IEEE Transactions on Circuits and Systems, vol. CAS-34, No. 7 (Jul. 1987).
Wiley, M., "Nintendo Wavebird Review," Jun. 11, 2002, http://gear.ign.com/articles/361/361933p1.html (accessed on Aug. 1, 2011).
Williams, et al., "Physical Presence: Palettes in Virtual Spaces," Society of Photo-Optical Instrumentation Engineers (SPIE) Conference Series, vol. 3639, No. 374-384 (May 1999), available at http://www.fakespacelabs.com/papers/3639_46_LOCAL.pdf.
Williams, et al., "Implementation and Evaluation of a Haptic Playback System," vol. 3, No. 3, Haptics-e, May 2004.
Williams, et al., "The Virtual Haptic Back Project," presented at the IMAGE 2003 Conference, Scottsdale, Arizona, Jul. 14-18, 2003.
Wilson, "Wireless User Interface Devices for Connected Intelligent Environments," http://research.microsoft.com/en-us/um/people/awilson/publications/old/ubicomp%202003.pdf (Oct. 2003).
Wilson, "WorldCursor: Pointing in Intelligent Environments with the World Cursor," http://www.acm.org/uist/archive/adjunct/2003/pdf/demos/d4-wilson.pdf (2003).
Wilson, "XWand: UI for Intelligent Environments," http://research.microsoft.com/en-us/um/people/awilson/wand/default.htm, Apr. 2004.
Wilson, et al., "Demonstration of the Xwand Interface for Intelligent Spaces," UIST '02 Companion, pp. 37-38 (Oct. 2002).
Wilson, et al., "Gesture Recognition Using the Xwand," http://www.ri.cmu.edu/pub_files/pub4/wilson_daniel_h_2004_1/wilson_daniel_h_2004_1.pdf (Apr. 2004).
Wilson, et al., "Xwand: UI for Intelligent Spaces," Paper presented at CHI 2003 Conference, Ft. Lauderdale, FL, Apr. 5-10, 2003, available at http://research.microsoft.com/en-us/um/people/awilson/publications/WilsonCHI2003/CHI%202003%20XWand.pdf (2003).
Wired Glove, Wikipedia article, 4 pages, http://en.wikipedia.org/wiki/Wired_glove, Nov. 18, 2010.
Wormell, "Unified Camera, Content and Talent Tracking in Digital Television and Movie Production," Presented at NAB 2000, Las Vegas, NV, Apr. 8-13, 2000 (available for download at http://www.intersense.com/pages/44/116/) (2003).
Wormell, et al., "Advancements in 3D Interactive Devices for Virtual Environments," Presented at the Joint International Immersive Projection Technologies (IPT)/Eurographics Workshop on Virtual Environments (EGVE) 2003 Workshop, Zurich, Switzerland, May 22-23, 2003 (available for download at http://www.intersense.com/pages/44/123/) (2003).
Worringham, et al., "Directional Stimulus-Response Compatibility: A Test of Three Alternative Principles," Ergonomics, vol. 41, Issue 6, pp. 864-880 (Jun. 1998).
Yang, et al., "Implementation and Evaluation of 'Just Follow Me': An Immersive, VR-Based, Motion-Training System, MIT Presence: Teleoperators and Virtual Environments," vol. 11, No. 3, at 304-23 (MIT Press), Jun. 2002.
You, et al., "Hybrid Inertial and Vision Tracking for Augmented Reality Registration," http://graphics.usc.edu/cgit/pdf/papers/Vr1999.PDF (Mar. 1999).
You, et al., "Orientation Tracking for Outdoor Augmented Reality Registration," IEEE Computer Graphics and Applications, IEEE, vol. 19, No. 6, pp. 36-42 (Nov. 1999).
Youngblut, et al., "Review of Virtual Environment Interface Technology," Institute for Defense Analyses (Mar. 1996).
Yun, et al., "Recent Developments in Silicon Microaccelerometers," SENSORS, 9(10) University of California at Berkeley, Oct. 1992.
Zhai, "Human Performance in Six Degree of Freedom Input Control," Ph.D. Thesis, University of Toronto (1995).
Zhai, "User Performance in Relation to 3D Input Device Design," Computer Graphics 32(4), pp. 50-54, Nov. 1998; text downloaded from http://www.almaden.ibm.com/u/zhai/papers/siggraph/final.html on Aug. 1, 2011.
Zhou, et al., "A survey—Human Movement Tracking and Stroke Rehabilitation," Technical Report: CSM-420, ISSN 1744-8050, Dept. of Computer Sciences, University of Essex, UK, Dec. 8, 2004.
Zhu et al., "A Real-Time Articulated Human Motion Tracking Using Tri-Axis Inertial/Magnetic Sensors Package," IEEE Transactions on Neural Systems and Rehabilitation Engineering, vol. 12, No. 2, Jun. 2004.
Zowie Playsets, http://www.piernot.com/proj/zowie/ (accessed on Jul. 29, 2011).
"Kirby Tilt 'n' Tumble 2" http://www.unseen64.net/2008/04/08/koro-koro-kirby-2-kirby-tilt-n-tumble-2-gc-unreleased/, Apr. 8, 2008 (accessed on Jul. 29, 2011).
"Emerald Forest Toys" [online] [retrieved on Sep. 24, 2005], retrieved from Internet <URL:http://www.pathworks.net/print_eft.html>.
Boulanger et al., "The 1997 Mathews Radio Baton and Improvisation Modes," Music Synthesis Department, Berklee College of Music (1997).
Complainants' Petition for Review, dated Sep. 17, 2012.
Complainants' Response to Commission's Request for Statements on the Public Interest, dated Oct. 10, 2012.
Complainants' Response to Respondents' Review, dated Sep. 25, 2012.
Creative Kingdoms LLC v. *ITC*, The United States Court of Appeals for the Federal Circuit, No. 2014-1072, dated Dec. 19, 2014.
Exintaris, et al., "Ollivander's Magic Wands : HCI Development," available at http://www.cim.mcgill.ca/~jer/courses/hci/project/2002/www.ece.mcgill.ca/%257Eeurydice/hci/notebook/final/MagicWand.pdf (2002).
Expert Report of Branimir R. Vojcic, Ph.D. on Behalf of Complainants Creative Kingdoms, LLC and New Kingdoms, LLC, dated Nov. 17, 2011.
Expert Report of Kenneth Holt on Behalf of Respondents Nintendo of America, Inc. and Nintendo Co., Ltd., dated Nov. 3, 2011.

(56) **References Cited**

OTHER PUBLICATIONS

Expert Report of Nathaniel Polish, Ph.D. on Behalf of Respondents Nintendo of America, Inc. and Nintendo Co., Ltd., dated Nov. 3, 2011.
IGN Article—Mad Catz Rumble Rod Controller, Aug. 20, 1999.
Initial Determination on Violation of Section 337 and Recommended Determination on Rememdy and Bond, dated Aug. 31, 2012.
Marrin, Teresa, "Toward an Understanding of Musical Gesture: Mapping Expressive Intention with the Digital Baton," Masters Thesis, Massachusetts Institute of Technology, Program in Media Arts and Sciences (1996).
Nintendo N64 Controller Pak Instruction Booklet, 1997.
Paradiso, et al., "Musical Applications of Electric Field Sensing", available at http://pubs.media.mit.edu/pubs/papers/96_04_cmj.pdf (1996).
Paradiso, Joseph A., "The Brain Opera Technology: New Instruments and Gestural Sensors for Musical Interaction and Performance" (Nov. 1998) available at http://pubs.media.mit.edu/pubs/papers/98_3_JNMR_Brain_Opera.pdf).
Petition of the Office of Unfair Import Investigations for Revew-in-Part of the Final Initial Determination, dated Sep. 17, 2012.
Pre-Hearing Statement of Complainants Creative Kingdoms, LLC and New Kingdoms, LLC, dated Jan. 13, 2012.
Public Version of Commission Opinion from United States International Trade Commission, dated Oct. 28, 2013.
Respondents Nintendo Co., Ltd. and Nintendo of America Inc.'s Contingent Petition for Review of Initial Determination, dated Sep. 17, 2012.
Respondents Nintendo Co., Ltd. and Nintendo of America Inc.'s Objections and Supplemental Responses to Complainants Creative Kingdoms, LLC and New Kingdoms, LLC's Interrogatory Nos. 35, 44, 47, 53, and 78, dated Oct. 13, 2011.
Respondents Nintendo Co., Ltd. and Nintendo of America Inc.'s Response to Complainants' and Staff's Petitions for Review, dated Sep. 25, 2012.
Response of the Office of Unfair Import Investigations to the Petitions for Review, dated Sep. 25, 2012.
Response to Office Action dated Sep. 18, 2009 for U.S. Appl. No. 11/404,844.
Specification of the Bluetooth System—Core v1.0b, Dec. 1, 1999.
Verplaetse,"Inertial Proprioceptive Devices: Self-Motion Sensing Toys and Tools," IBM Systems Journal, vol. 35, Nos. 3&4 (Sep. 1996).
Kirby Tilt 'n' Tumble (GCN-GBA Spaceworld 2001, You Tube Video, uploaded by adonfjv on Sep. 5, 2006 (accessed at http://www.youtube.com/watch?v=5rLhlwp2iGk on Sep. 7, 2011).
Resnick, et al., "Digital Manipulatives: New Toys to Think With," Chi 98; Apr. 1998; pp. 281-287.

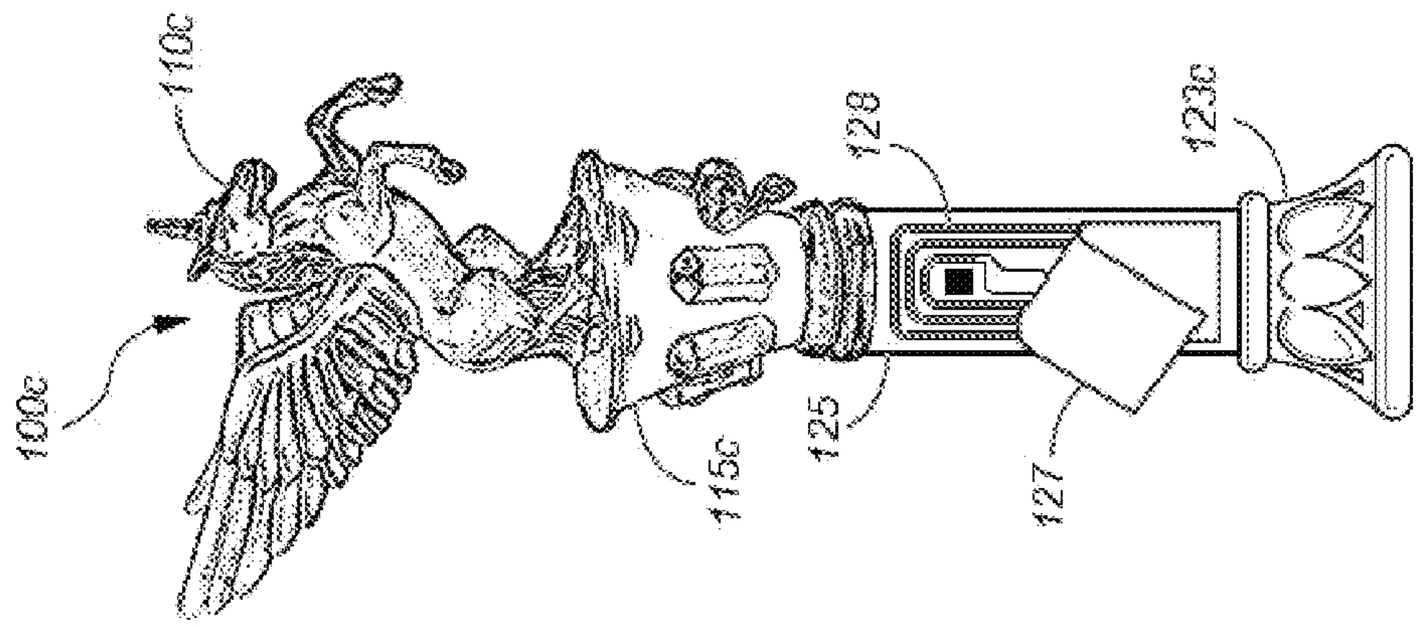

FIG. 2B

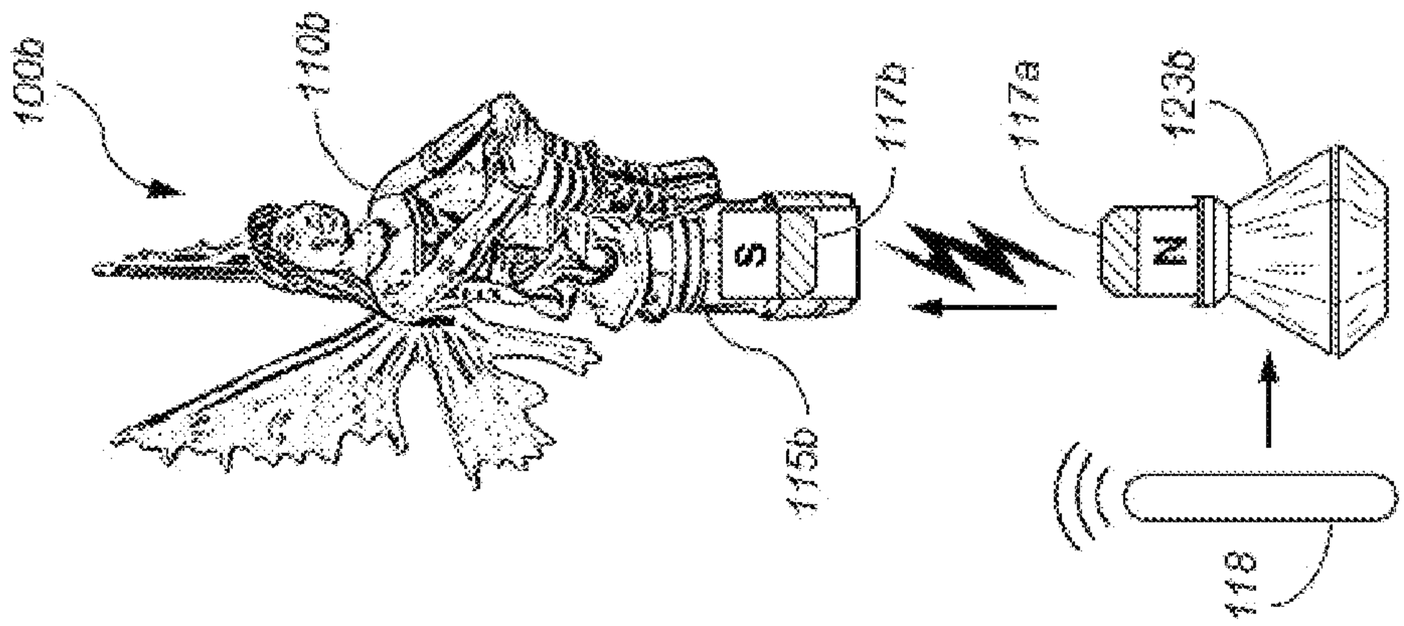

FIG. 2A

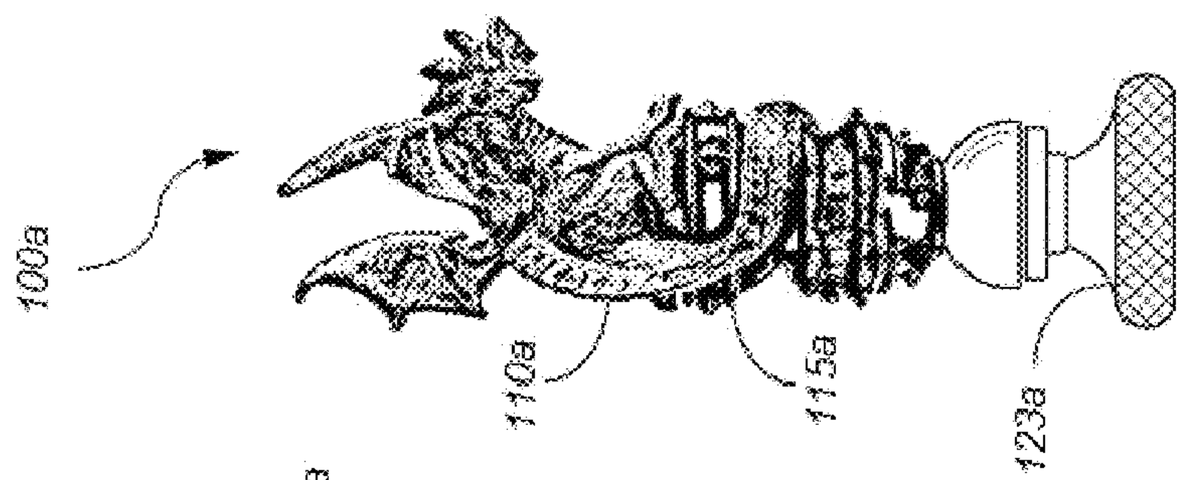

FIG. 1B

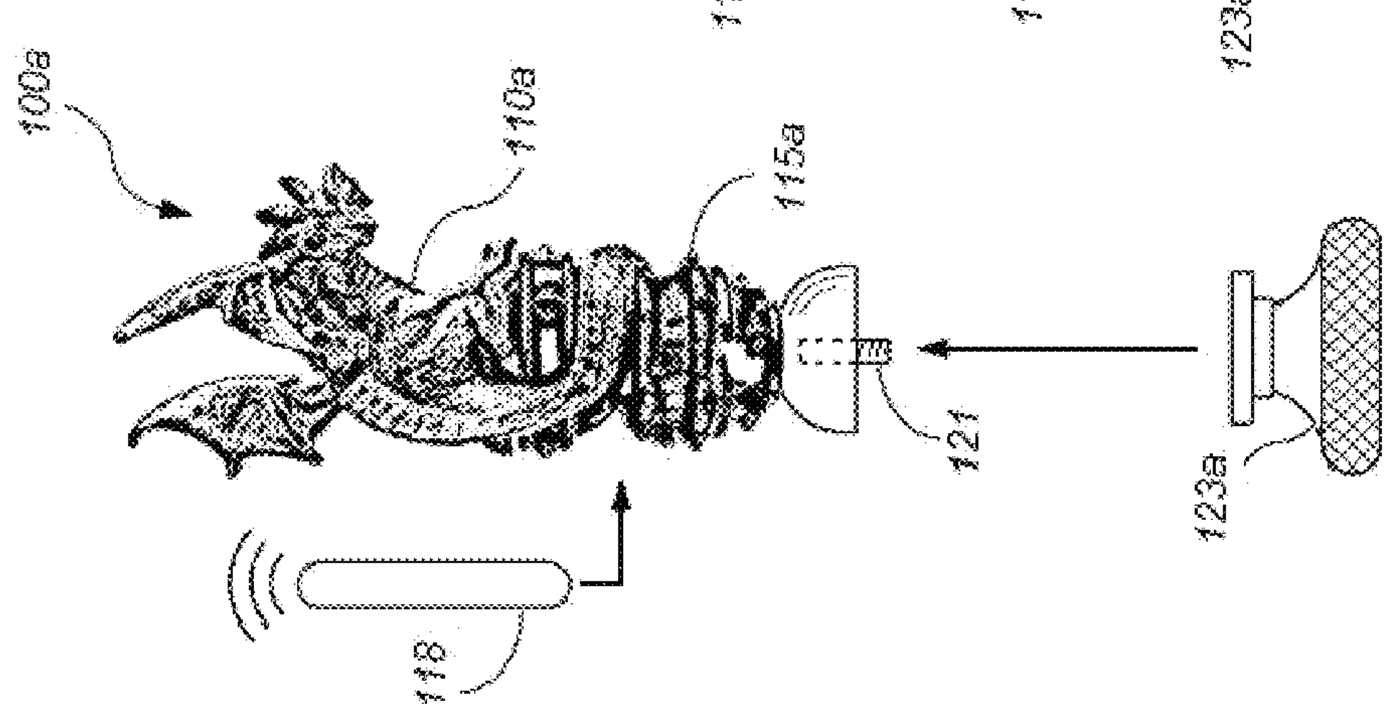

FIG. 1A

FIG. 3A

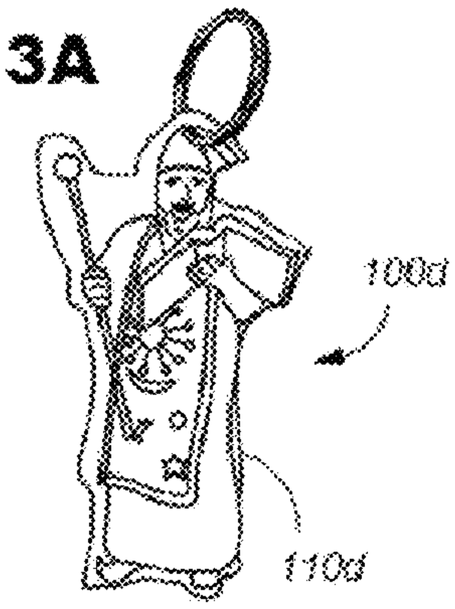

FIG. 3B

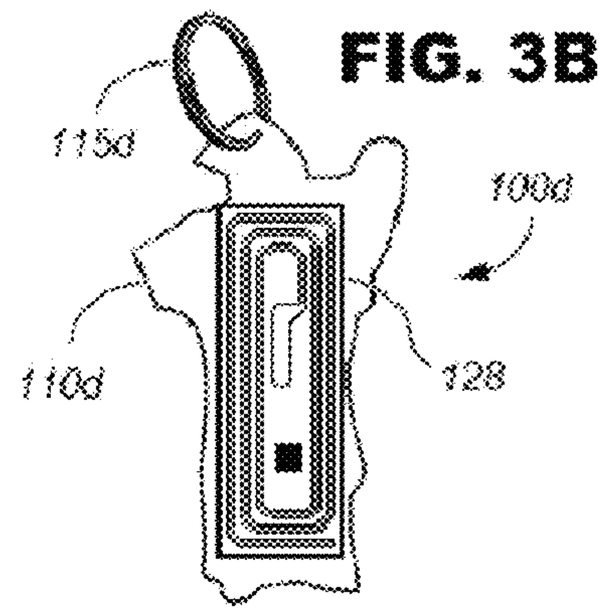

FIG. 4

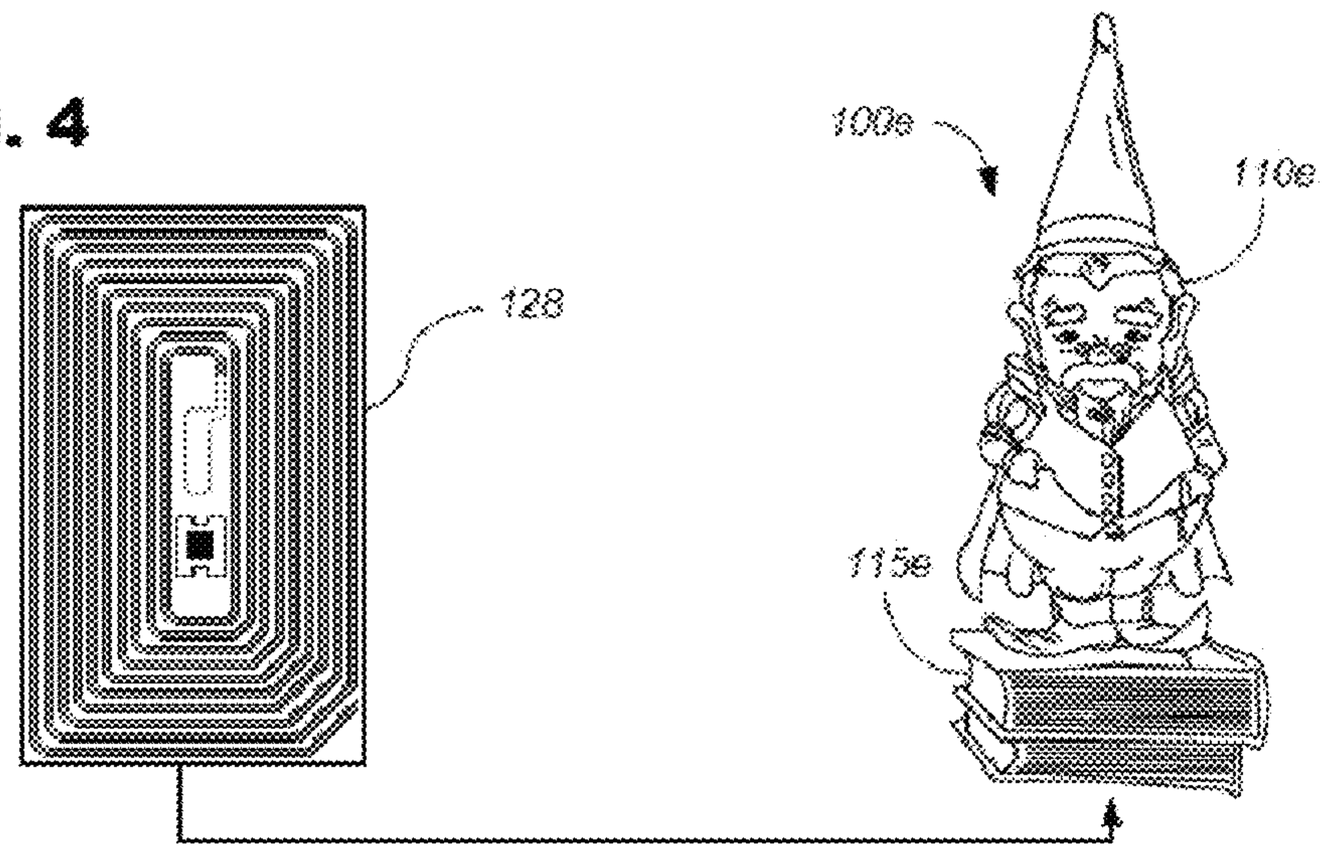

FIG. 5

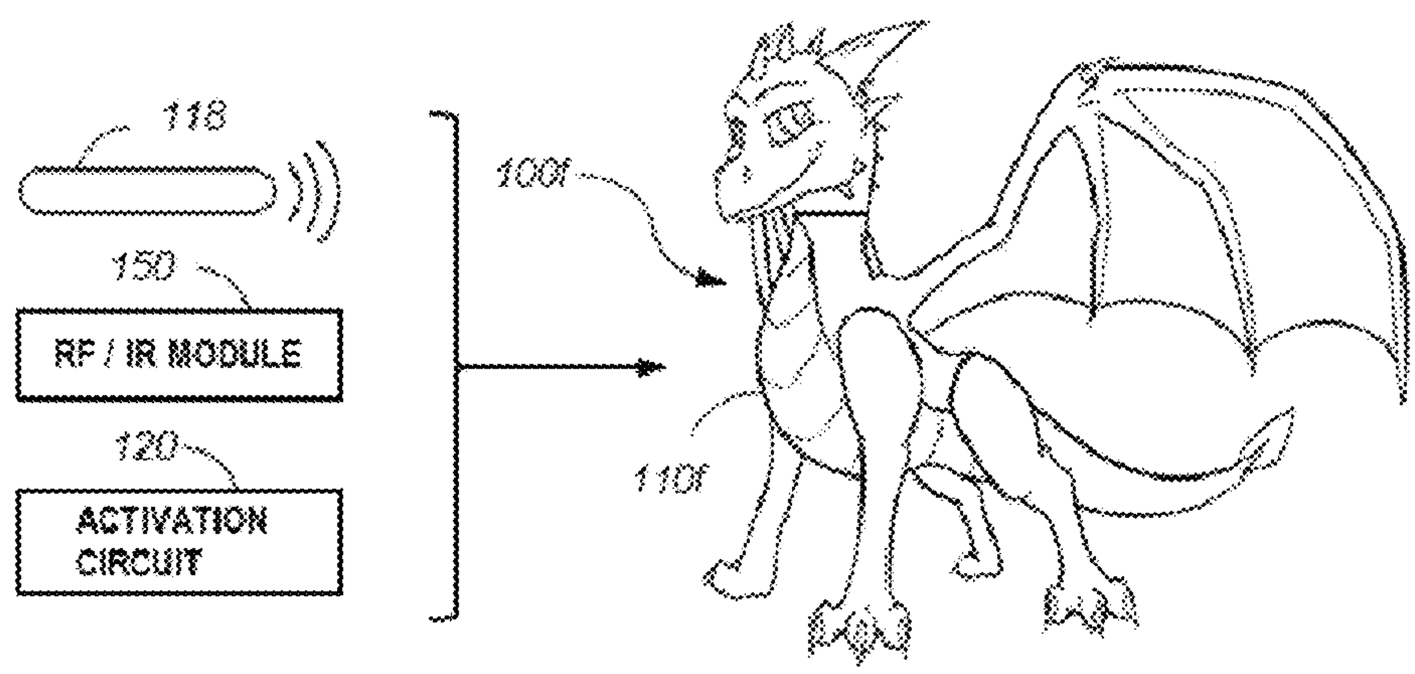

FIG. 6

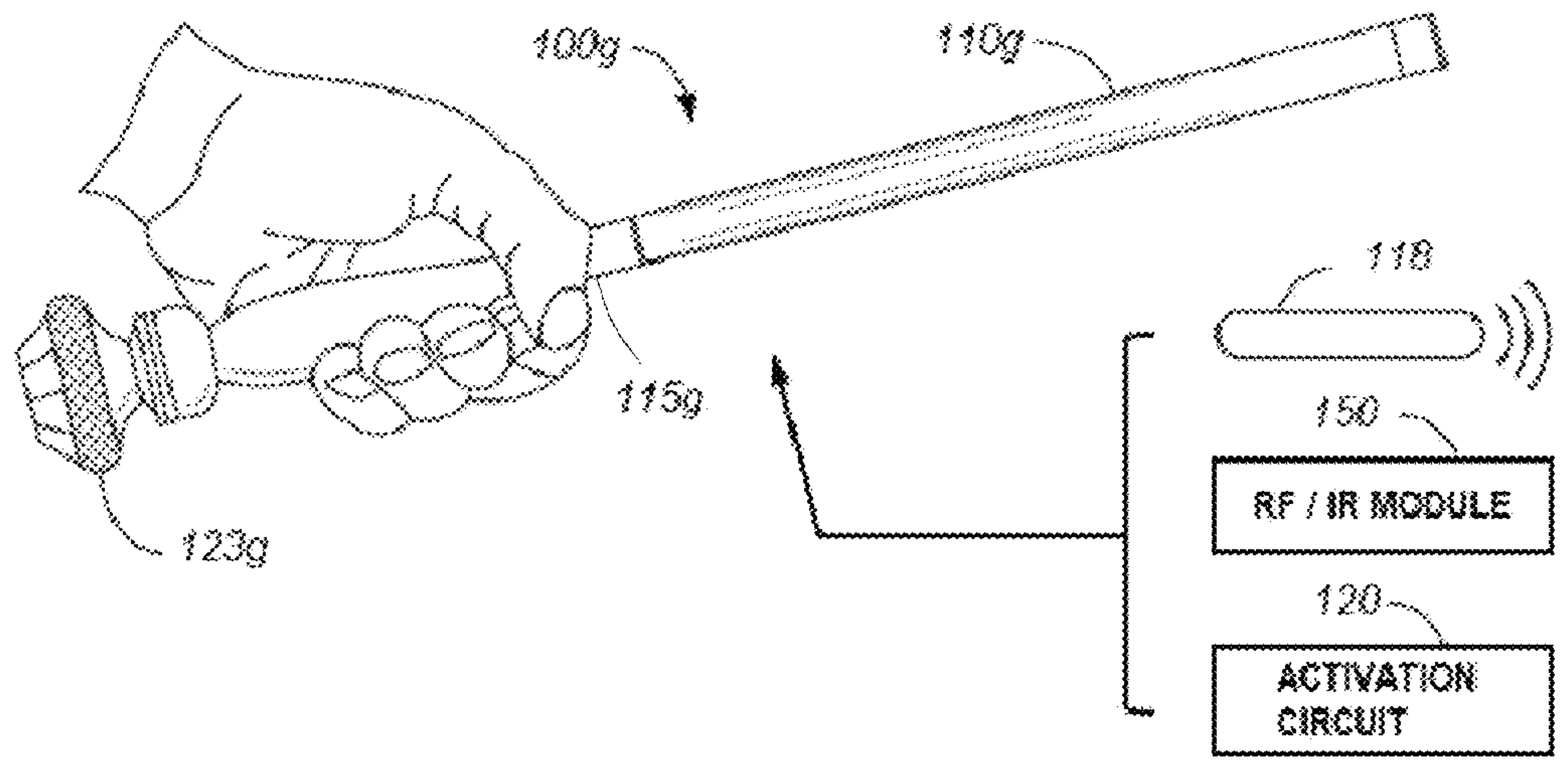

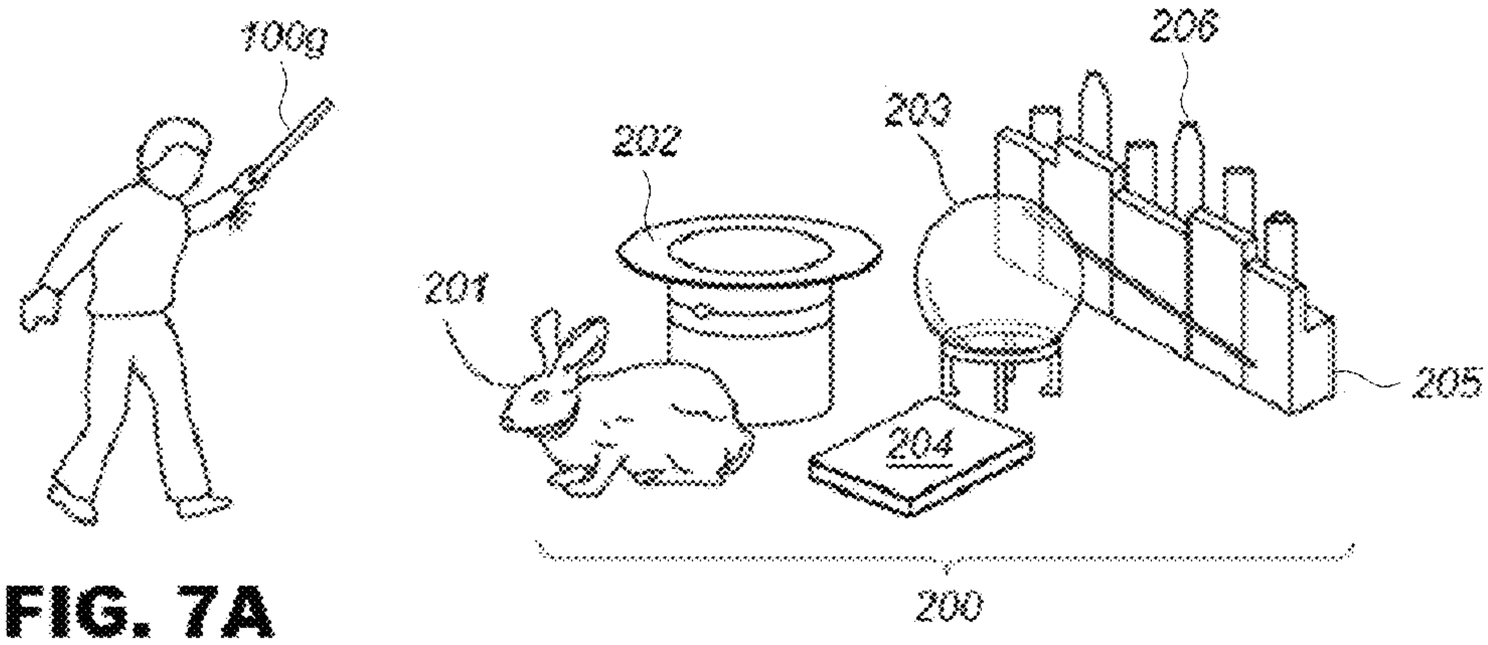

FIG. 7A

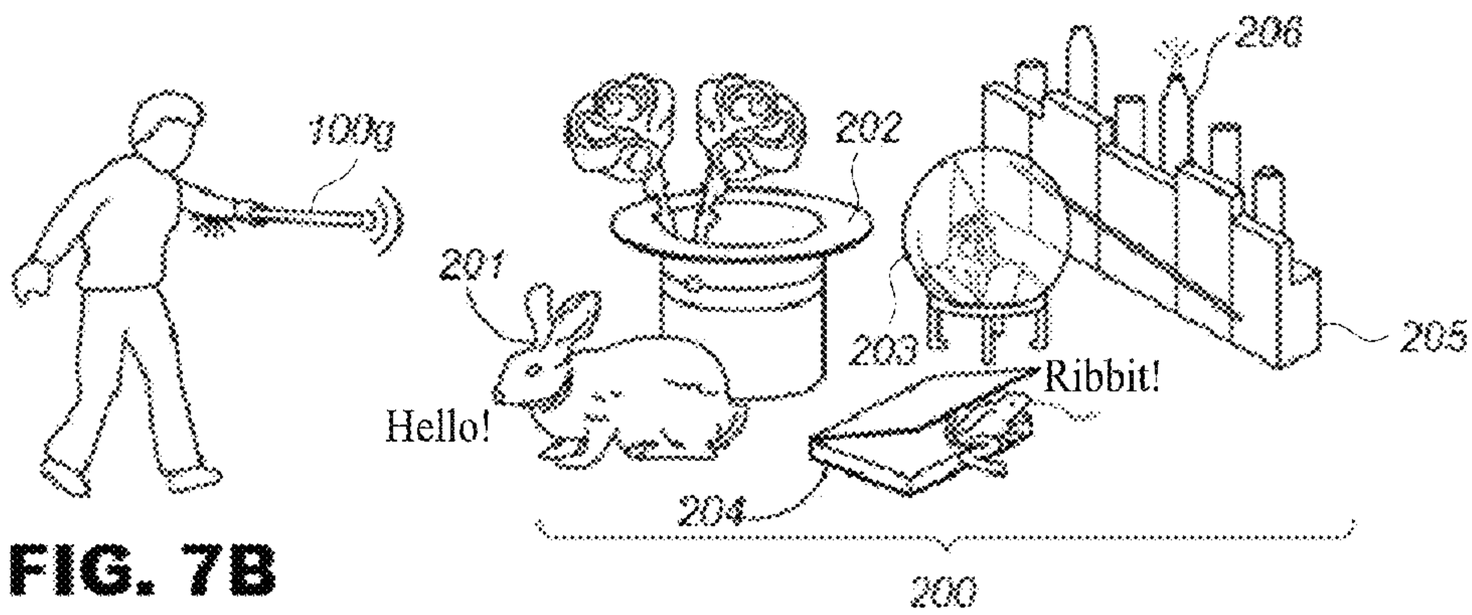

FIG. 7B

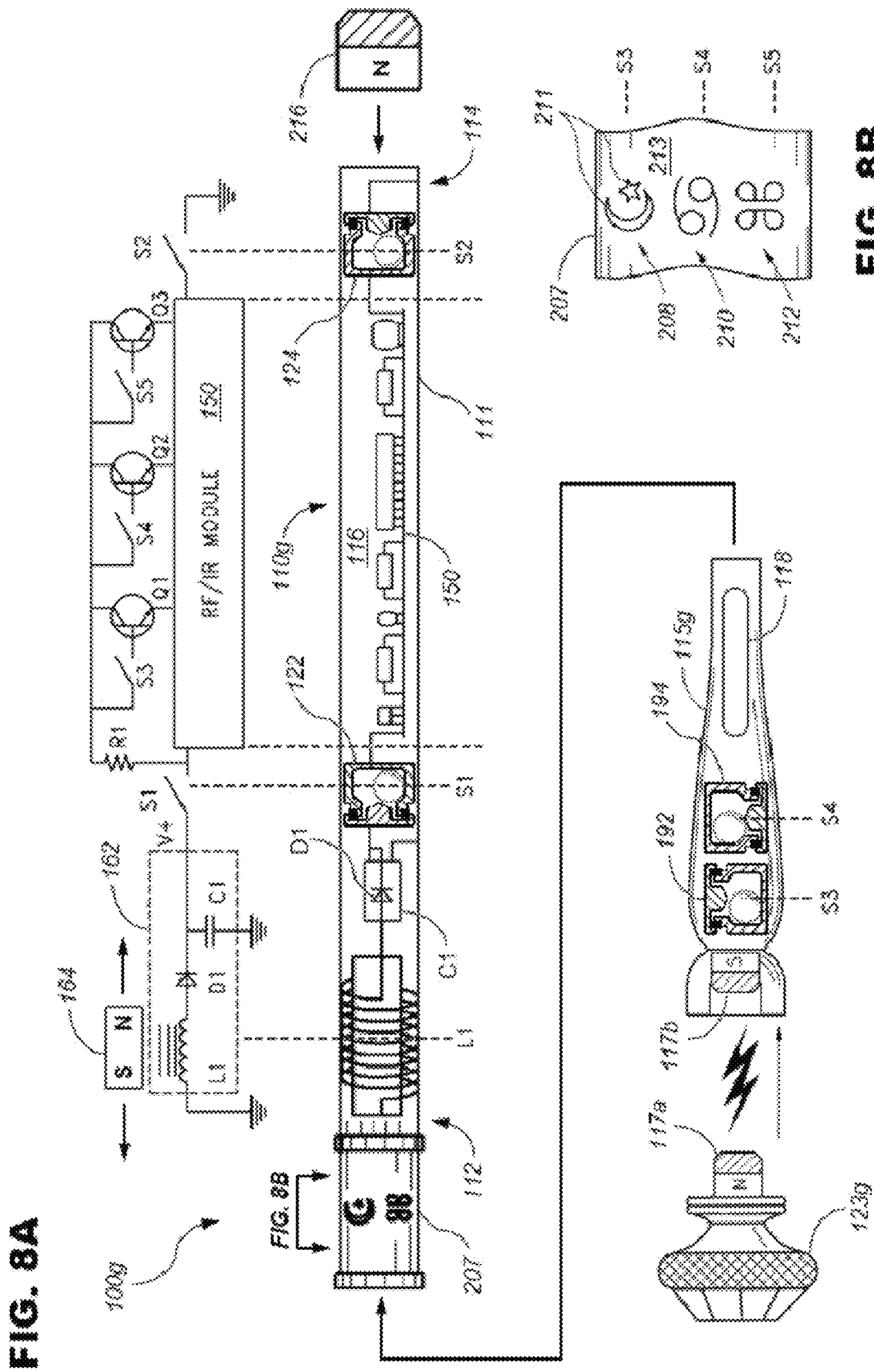
FIG. 8A
FIG. 8B
RF/IR MODULE
150
Q1
Q2
Q3
S1
S2
S3
S4
S5
R1
V4
C1
D1
L1
102
104
100g
110g
111
112
114
116
117a
117b
118
122
123g
124
150
192
194
115g
207
208
210
211
212
213
216

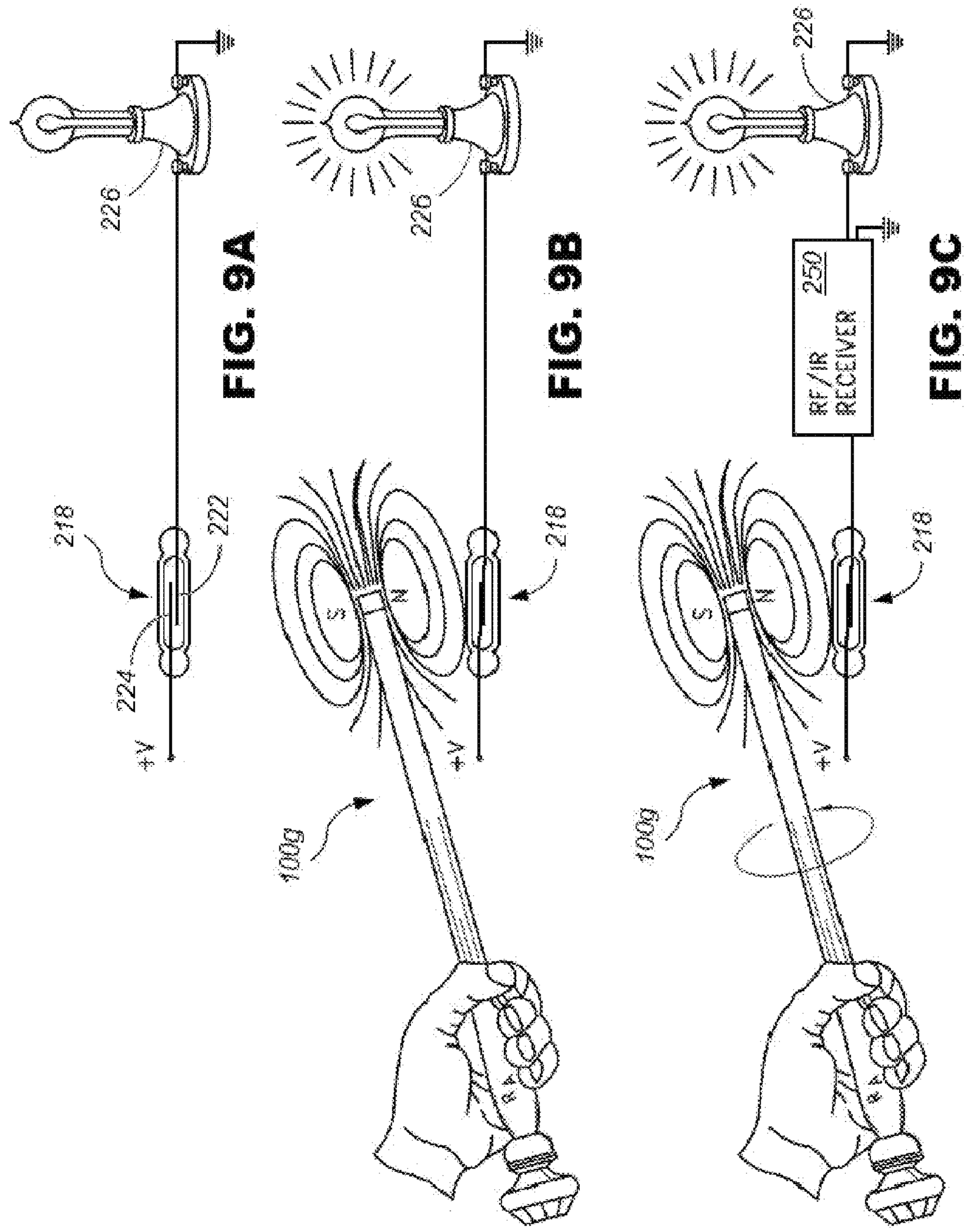

FIG. 9A

FIG. 9B

FIG. 9C

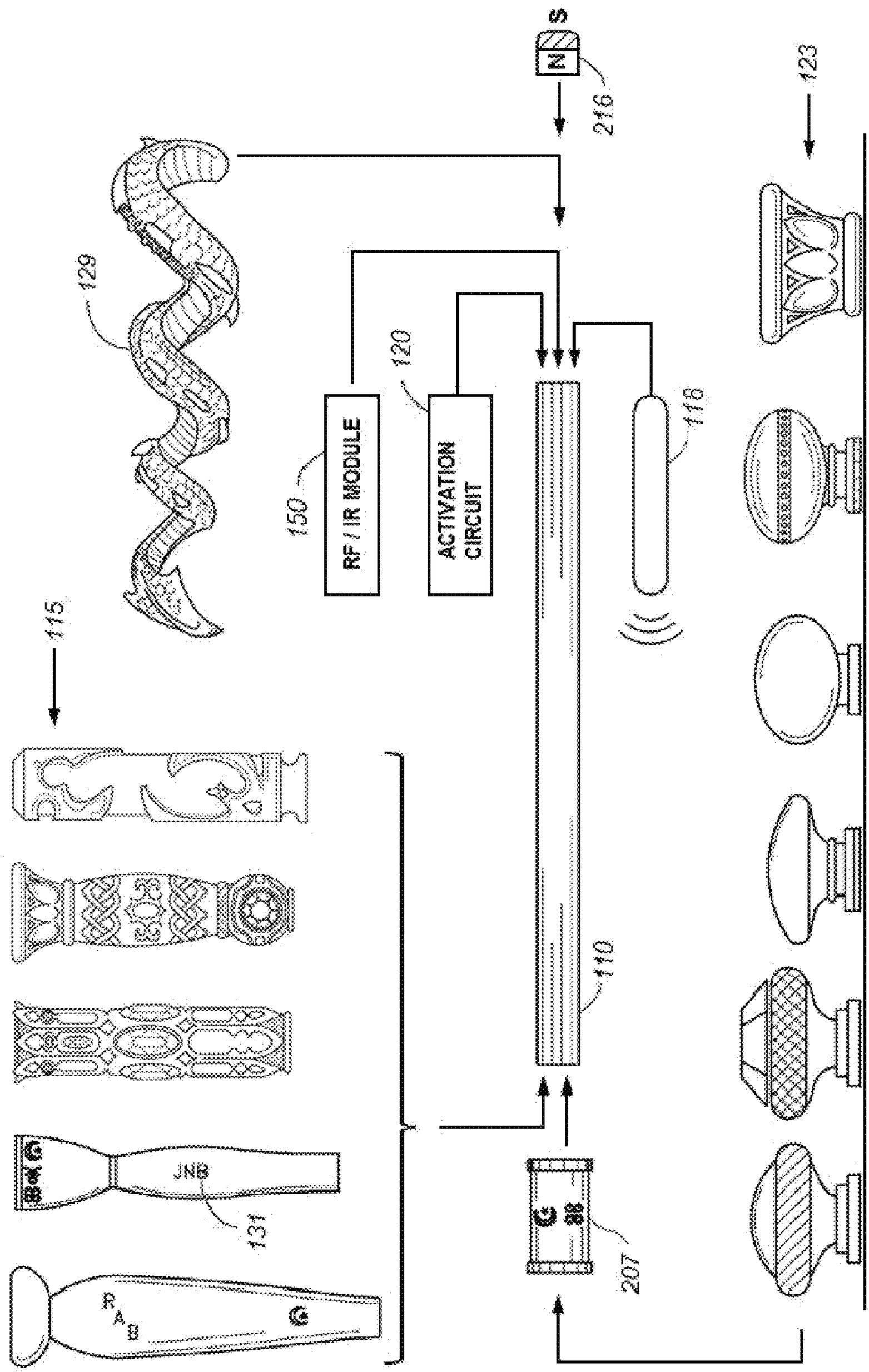
S
N
216
123
129
120
RF / IR MODULE
150
ACTIVATION CIRCUIT
118
115
110
JNB
131
R
A
B
207

FIG. 10

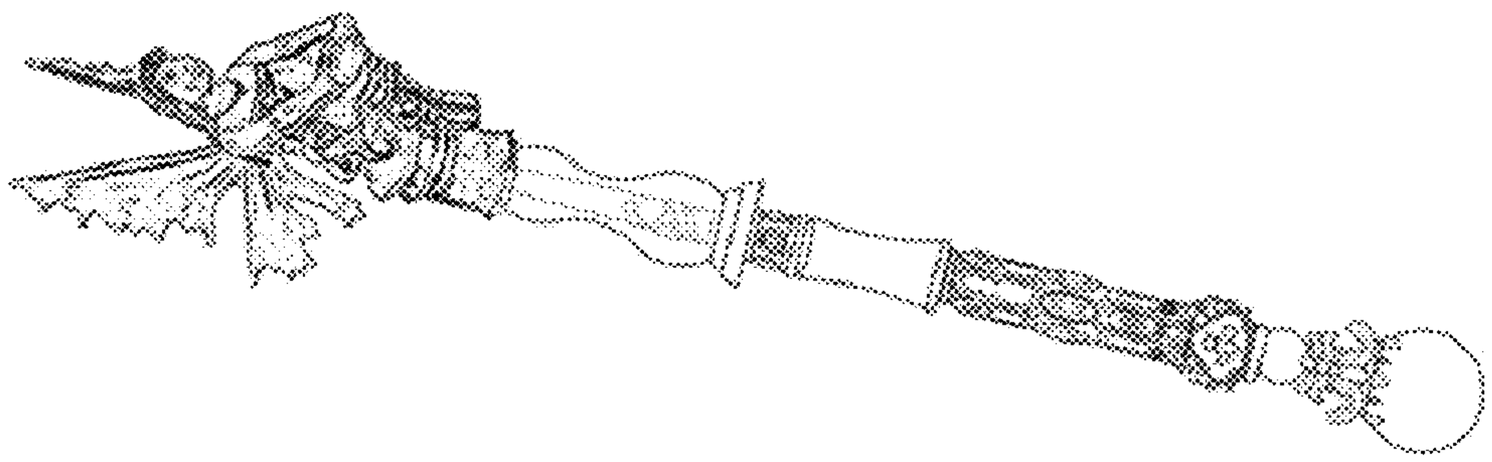

FIG. 11E

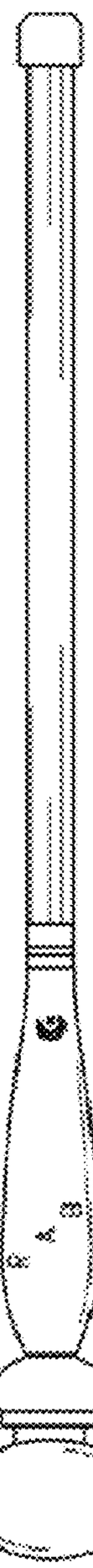

FIG. 11A

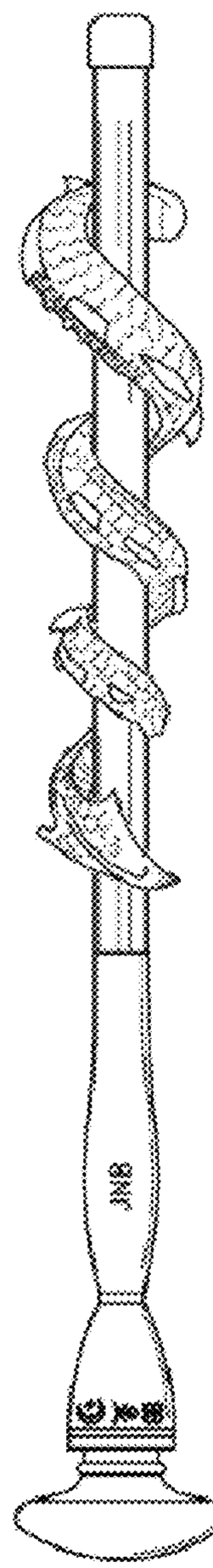

FIG. 11B

FIG. 11C

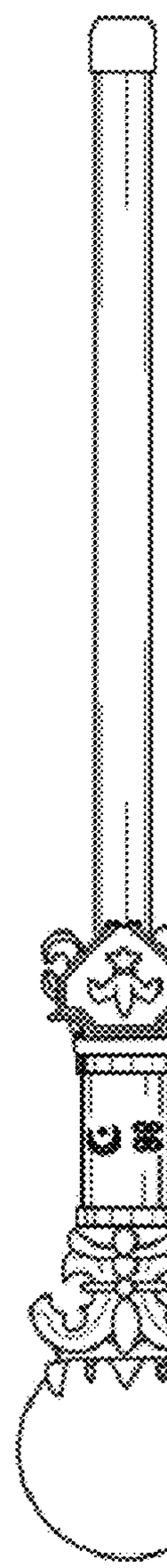

FIG. 11D

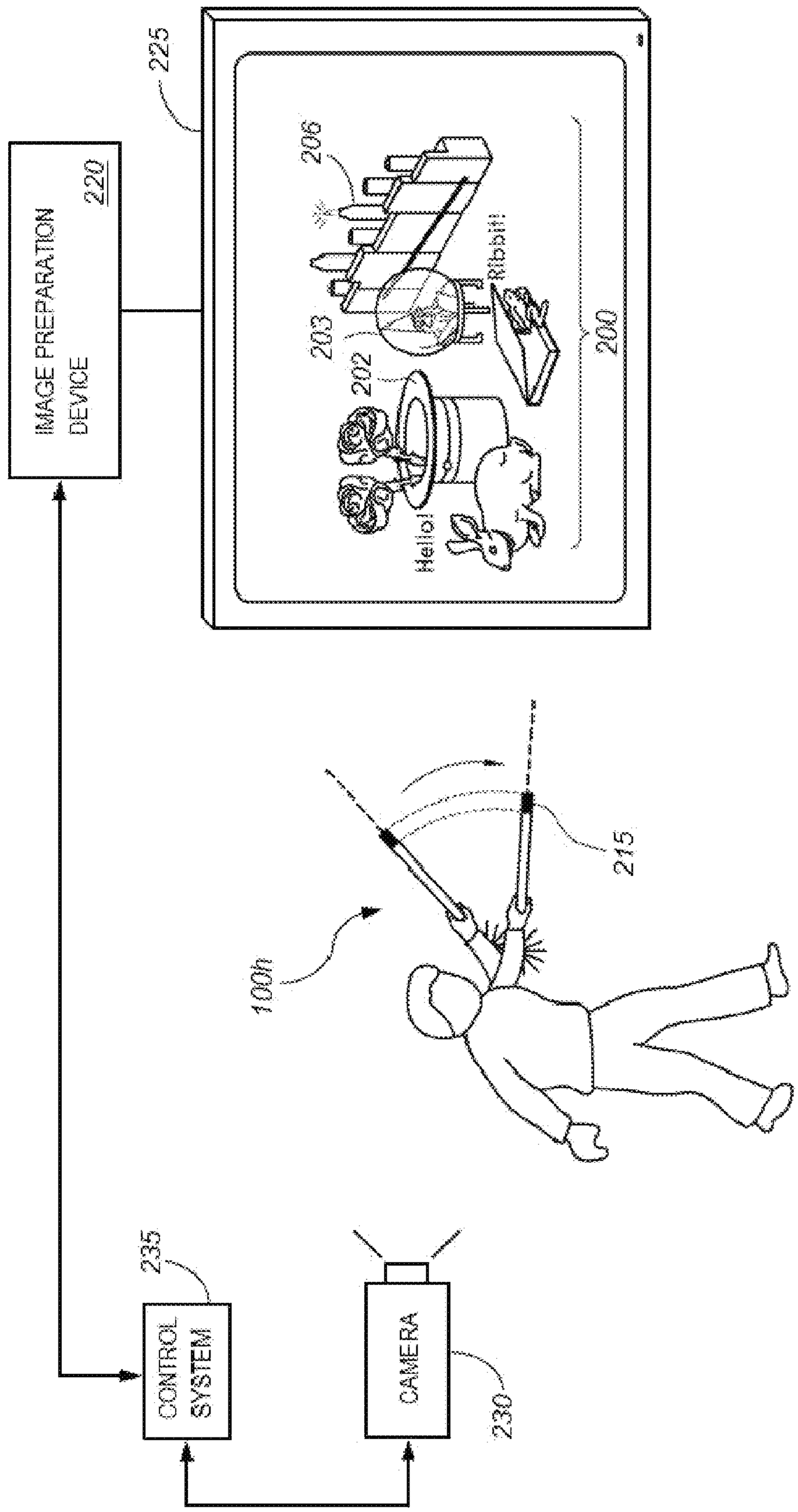
IMAGE PREPARATION DEVICE
220
225
206
203
202
Hello!
Ribbit!
200
100h
215
CONTROL SYSTEM
235
CAMERA
230

FIG. 12

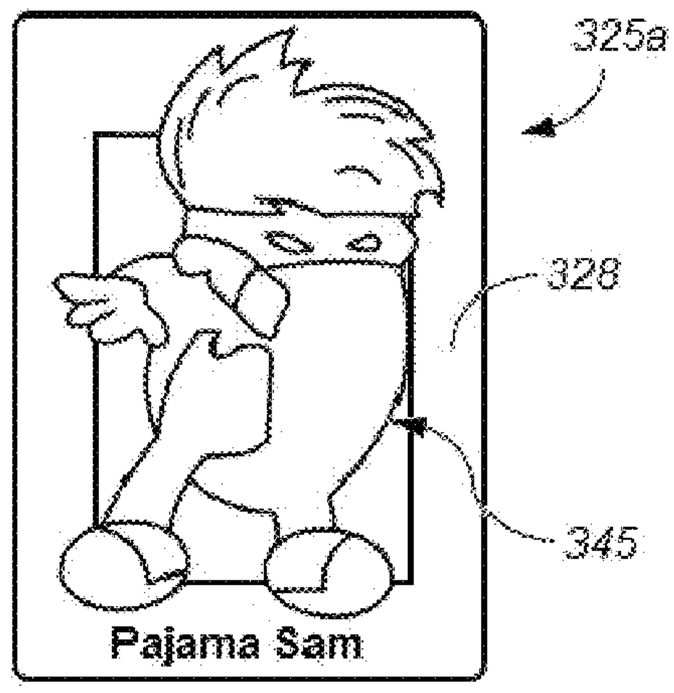

FIG. 13A

FIG. 13B

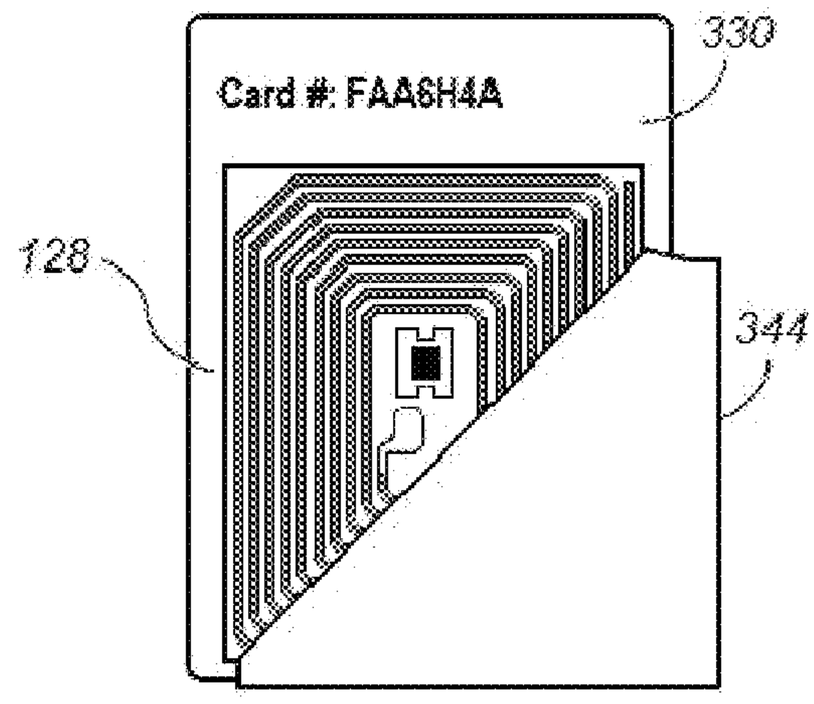

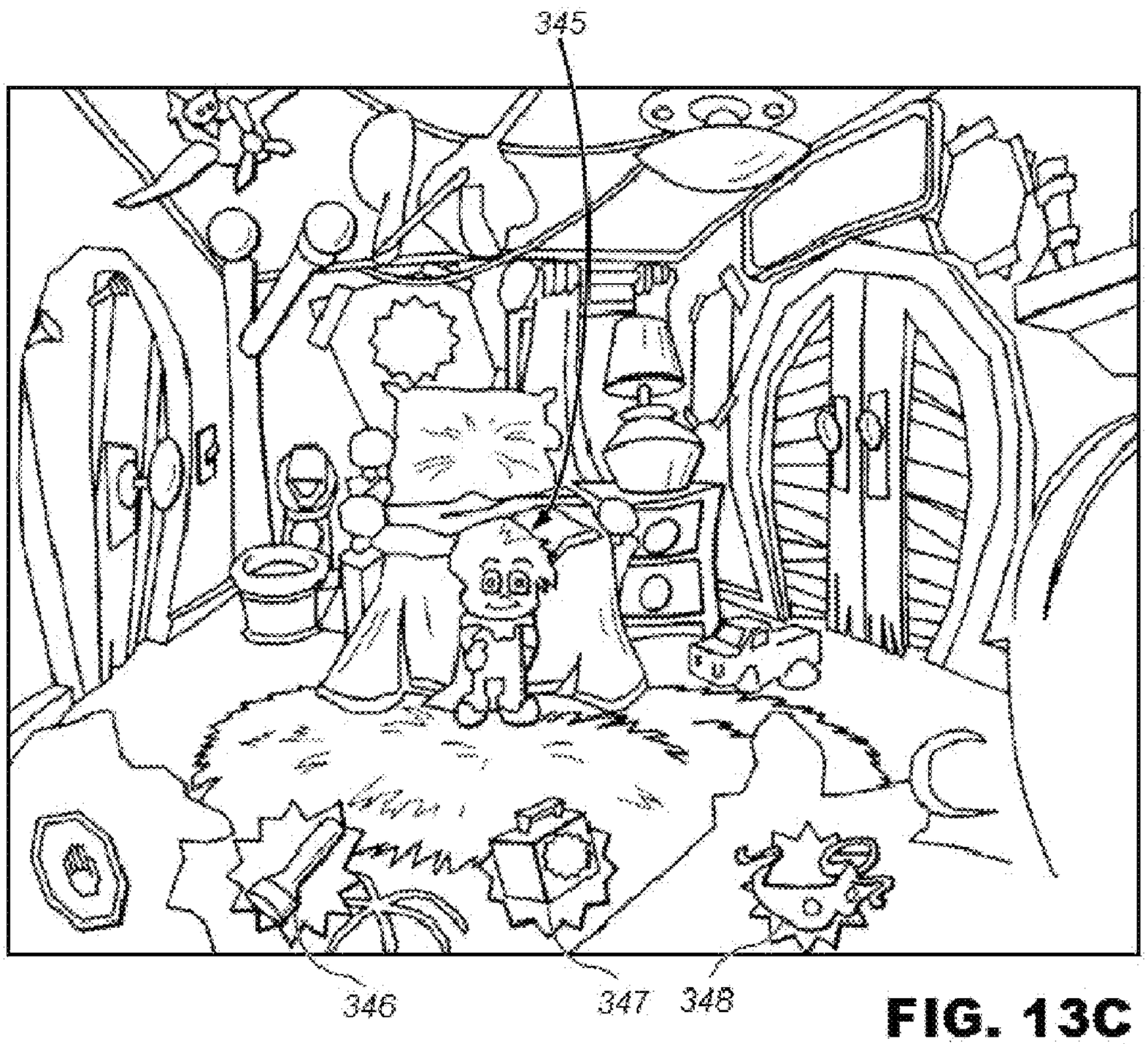

FIG. 13C

FIG. 14A

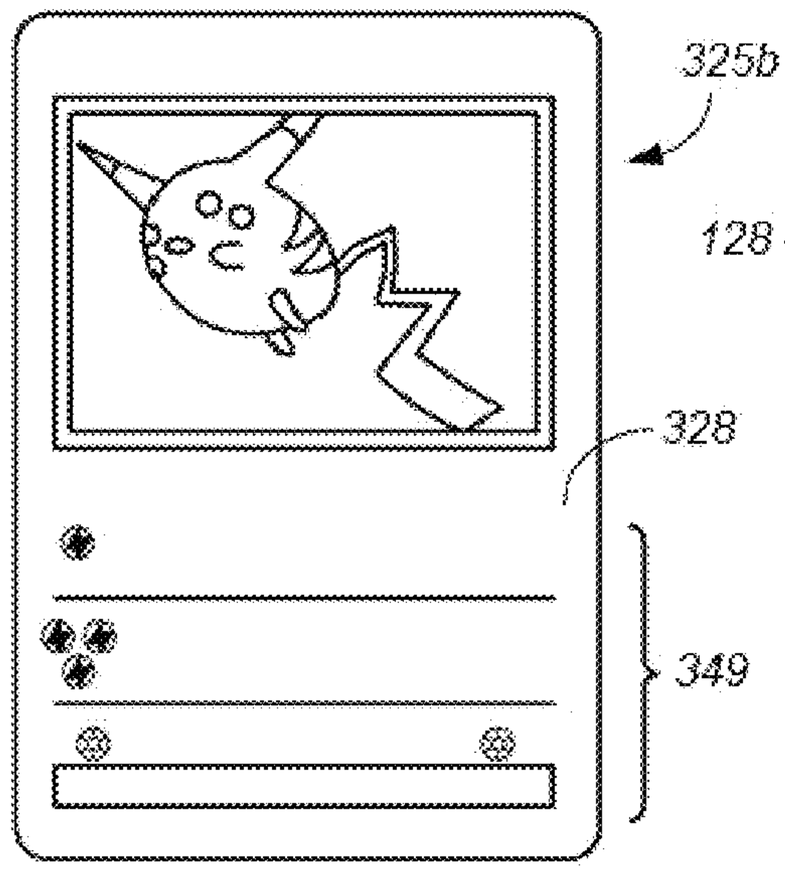

FIG. 14B

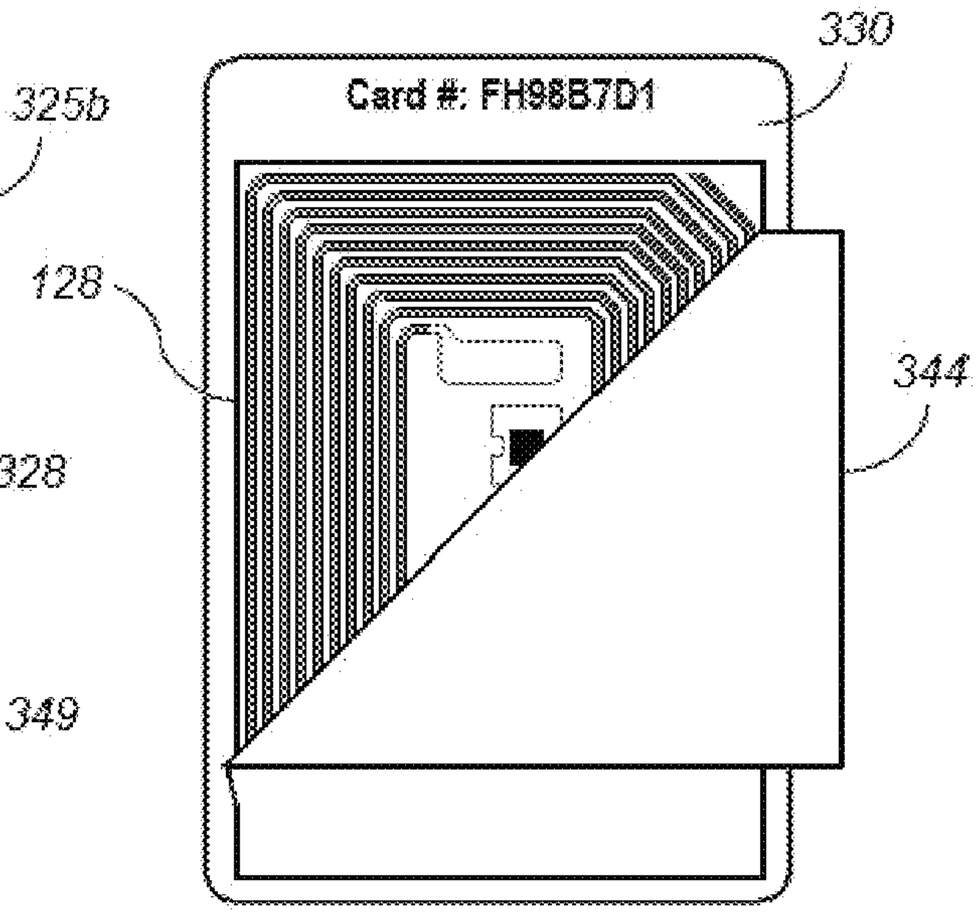

FIG. 14C

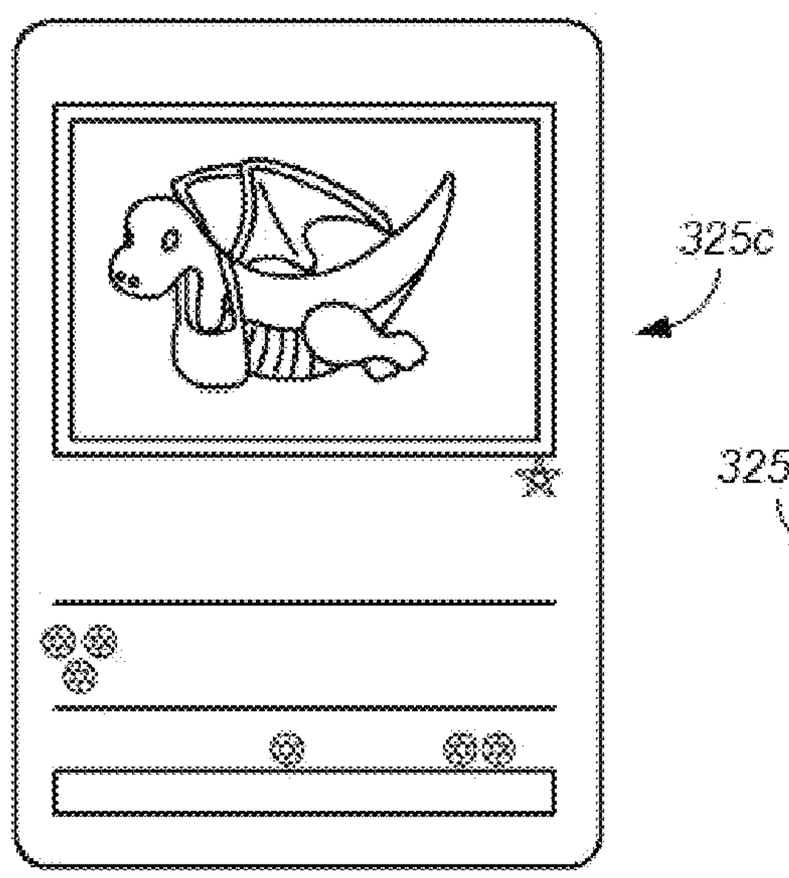

FIG. 14D

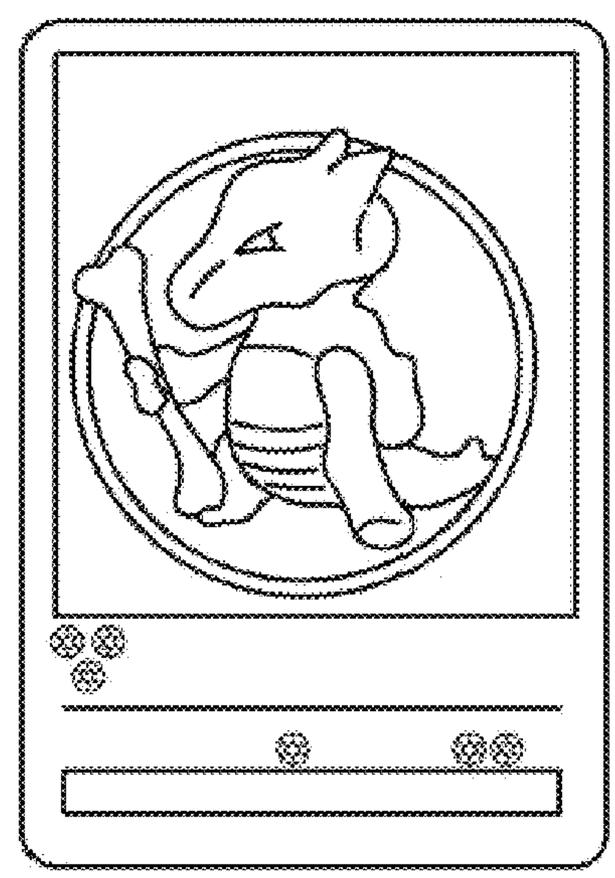

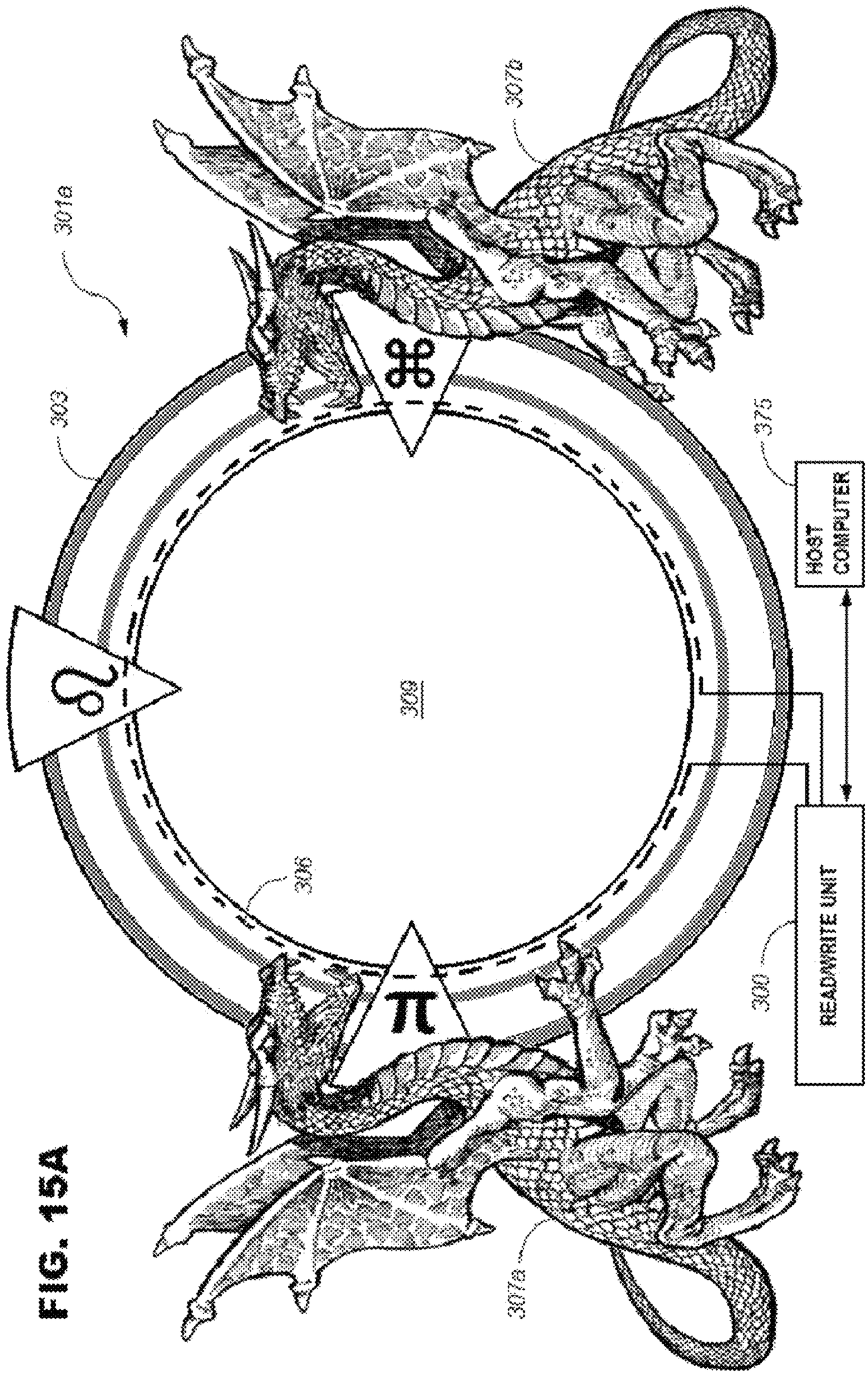
301a
309
306
307a
307b
308
300
375
HOST COMPUTER
READ/WRITE UNIT

FIG. 15A

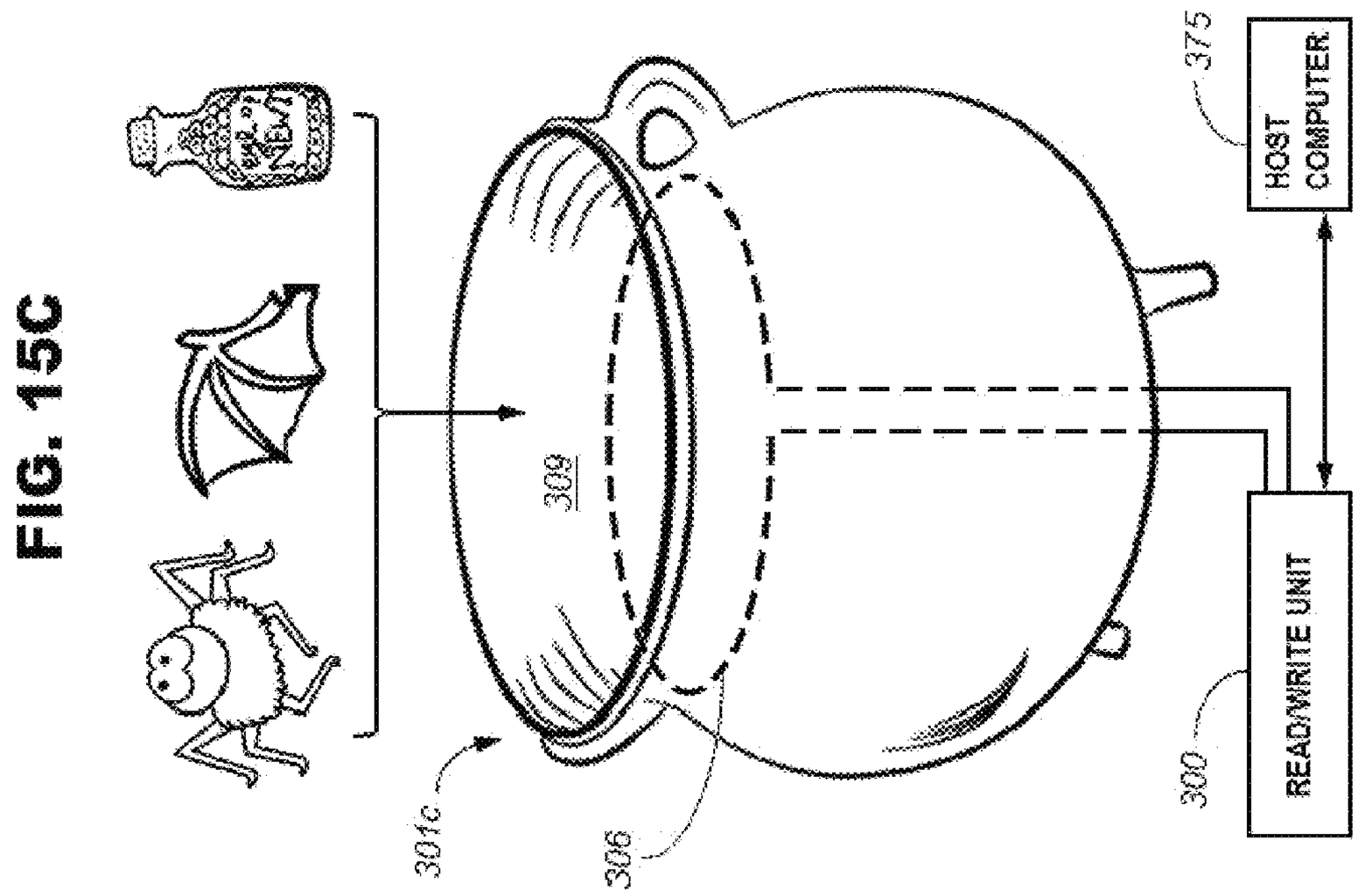

FIG. 15C

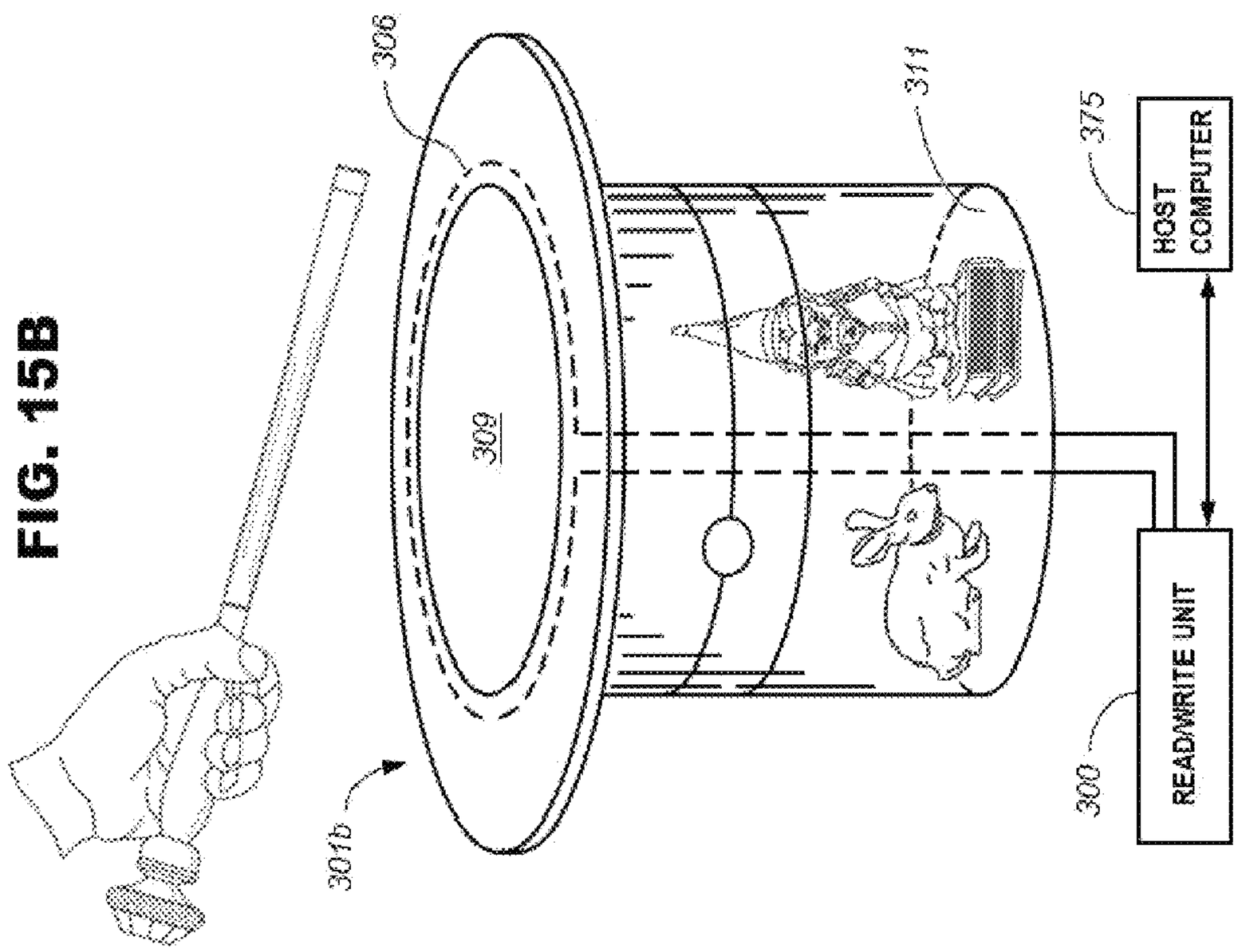

FIG. 15B

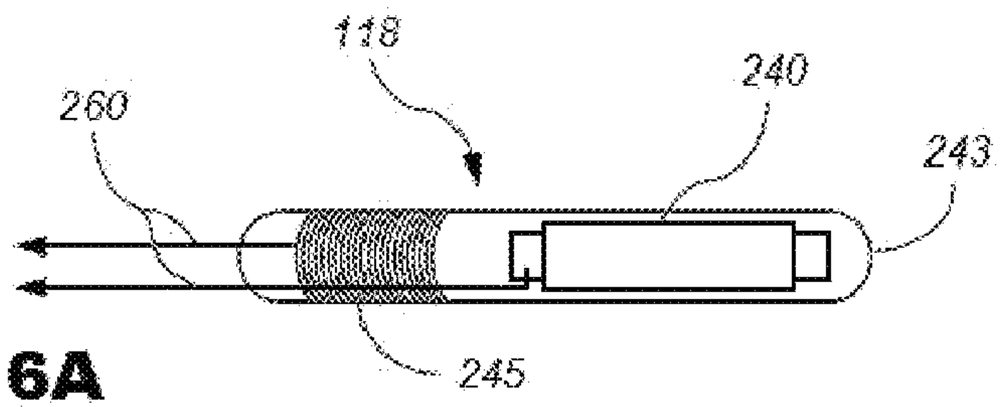

FIG. 16A

FIG. 16B

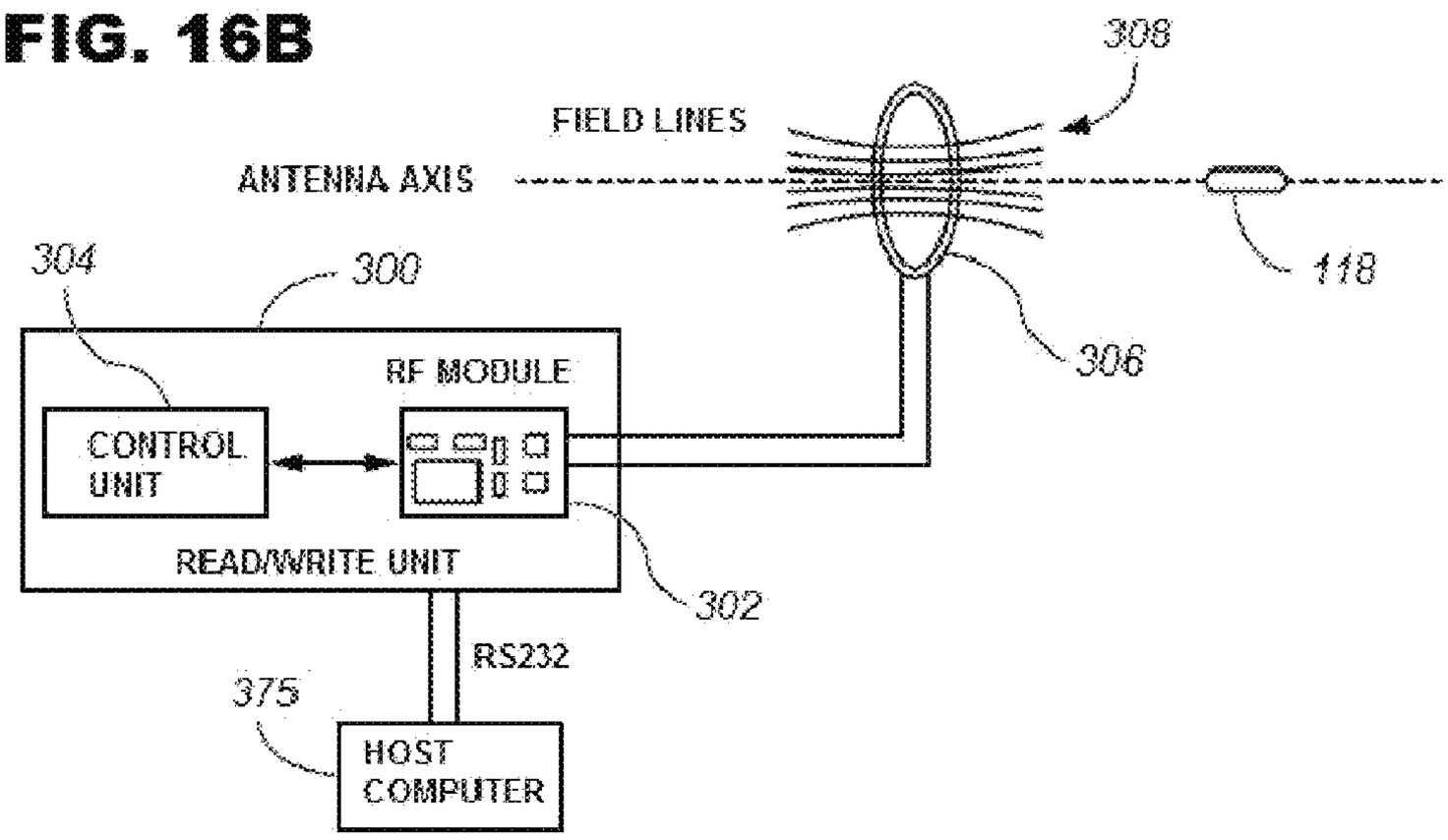

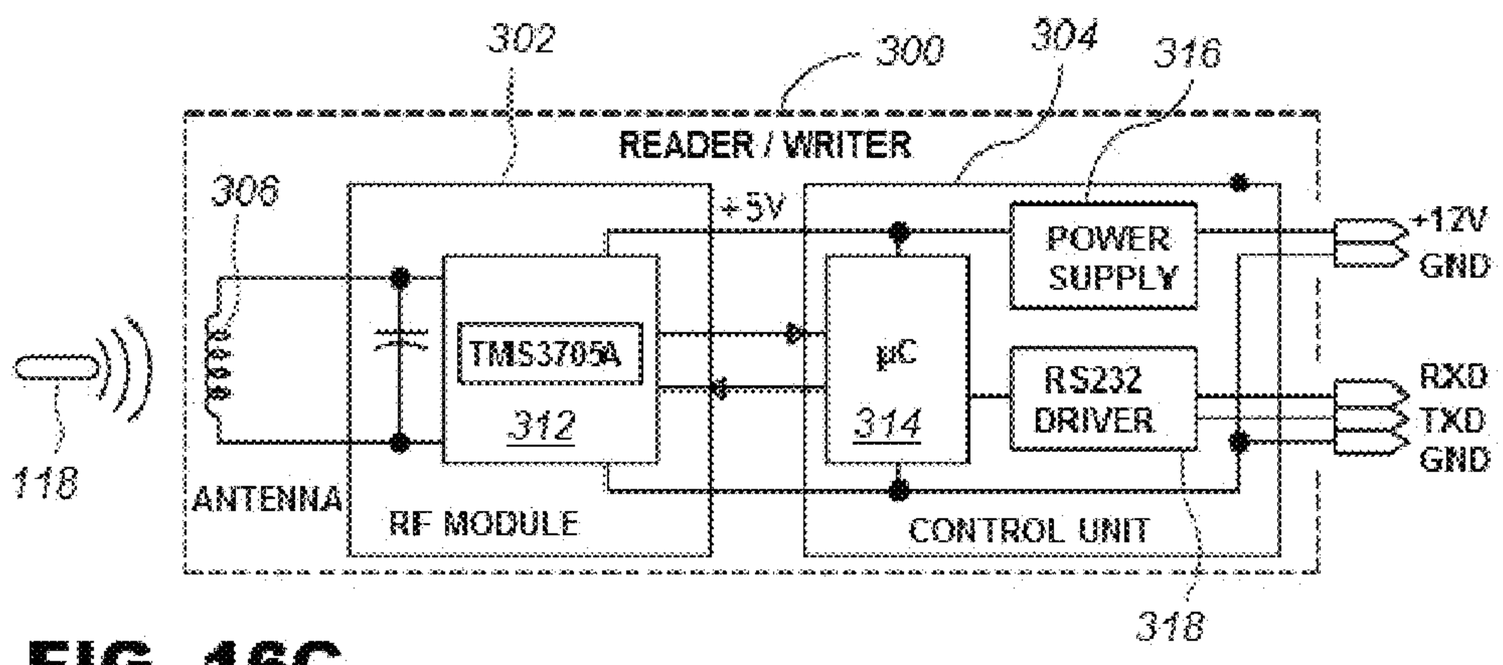

FIG. 16C

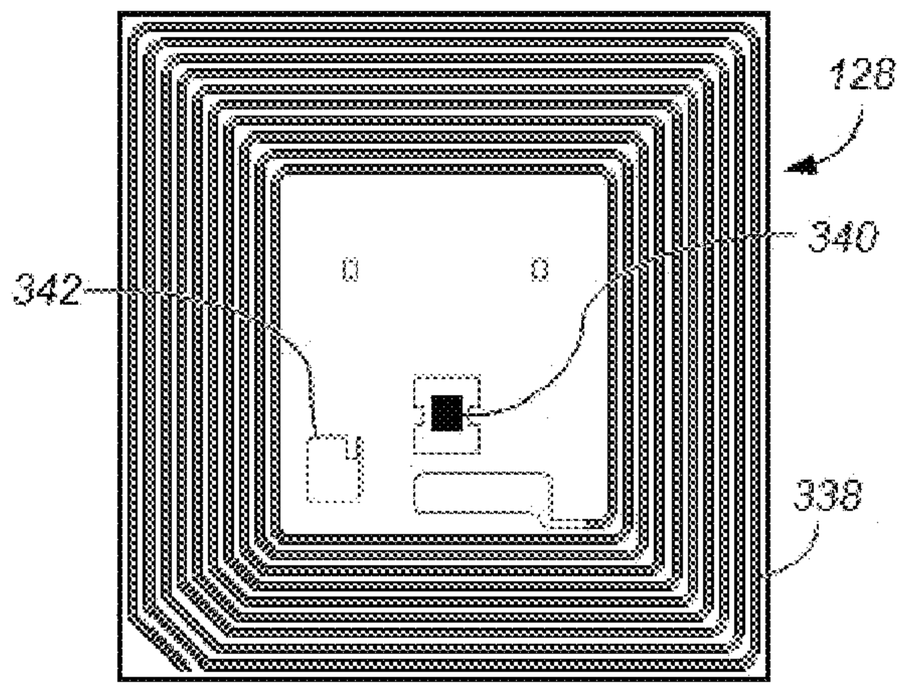

FIG. 17A

FIG. 17B

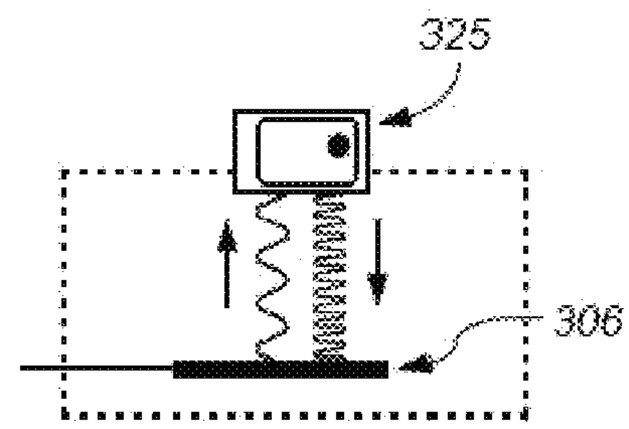

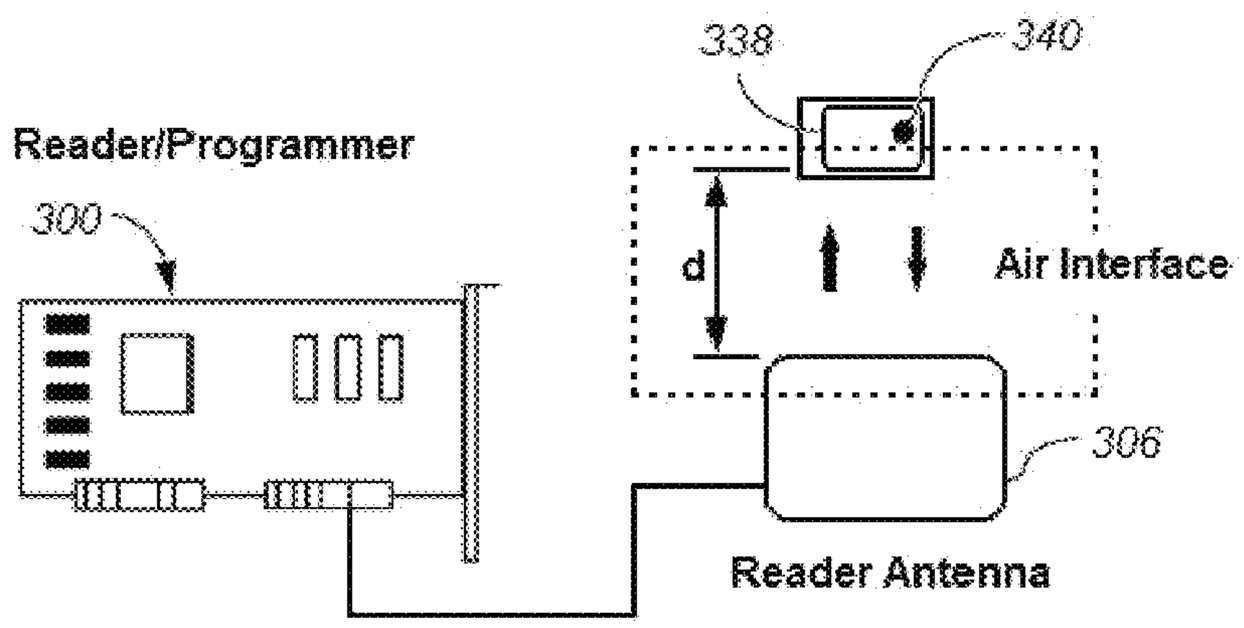

FIG. 17C

FIG. 17D

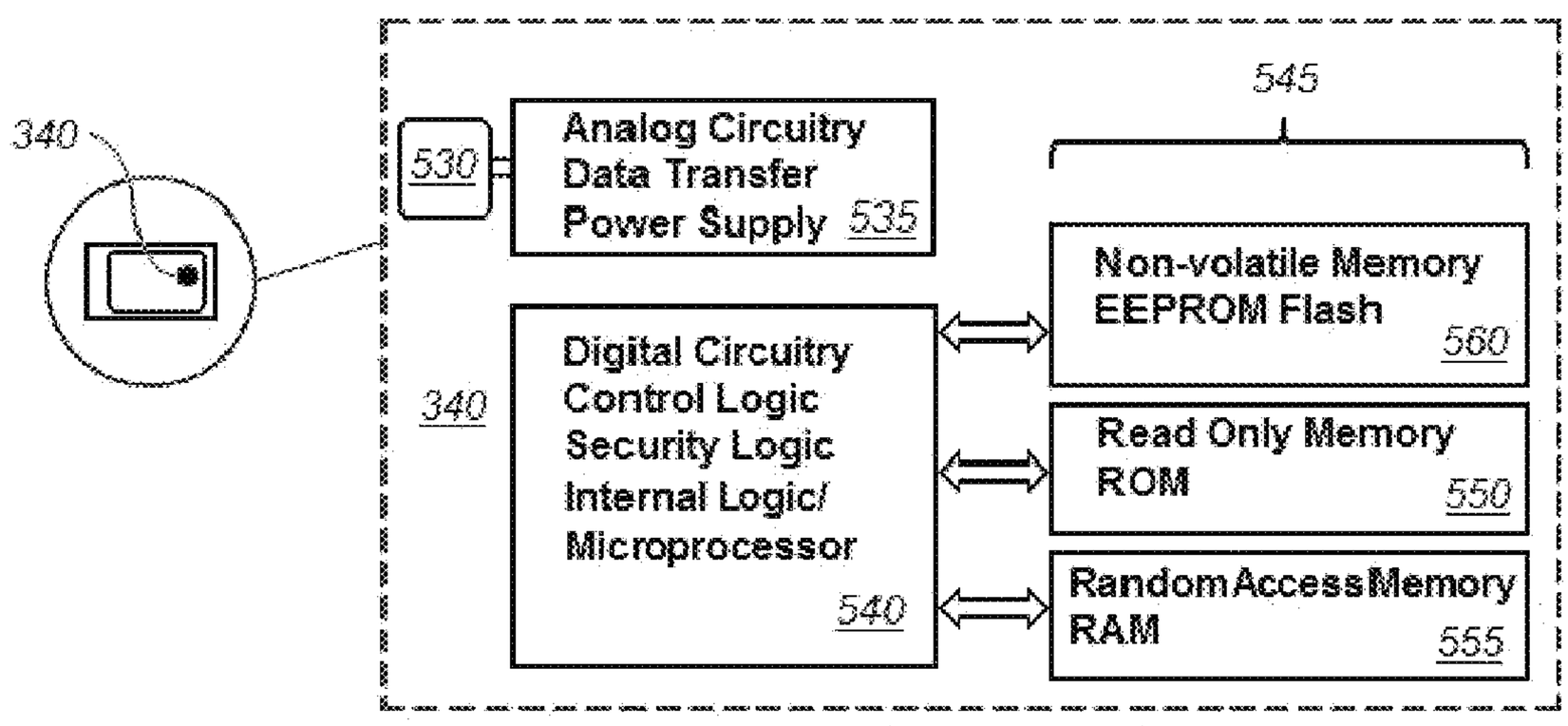

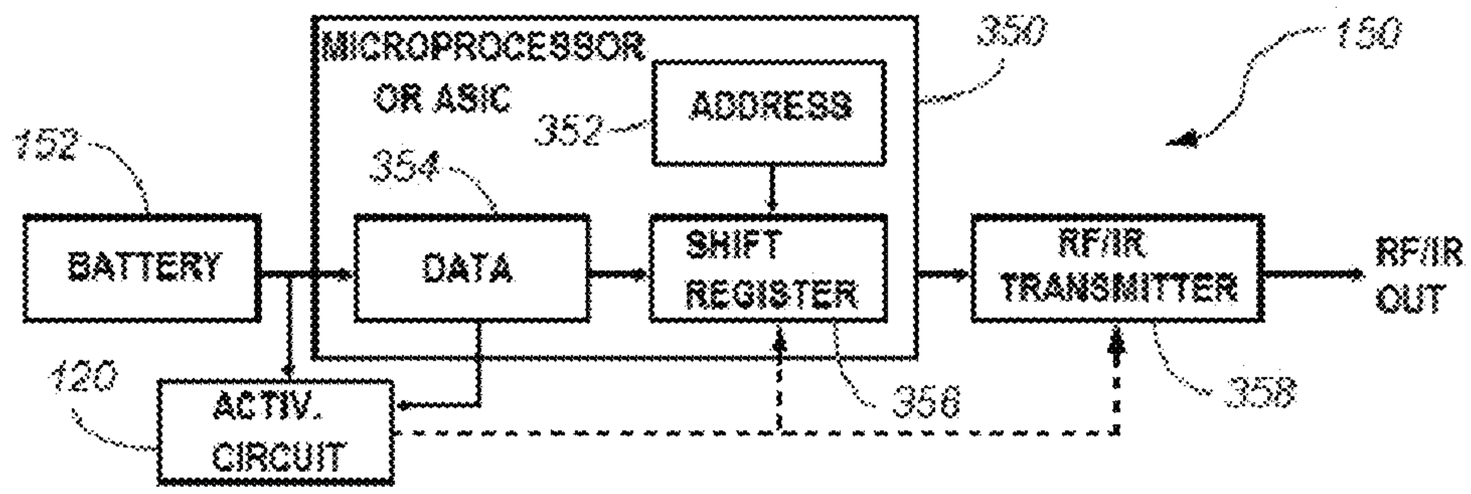

FIG. 18A

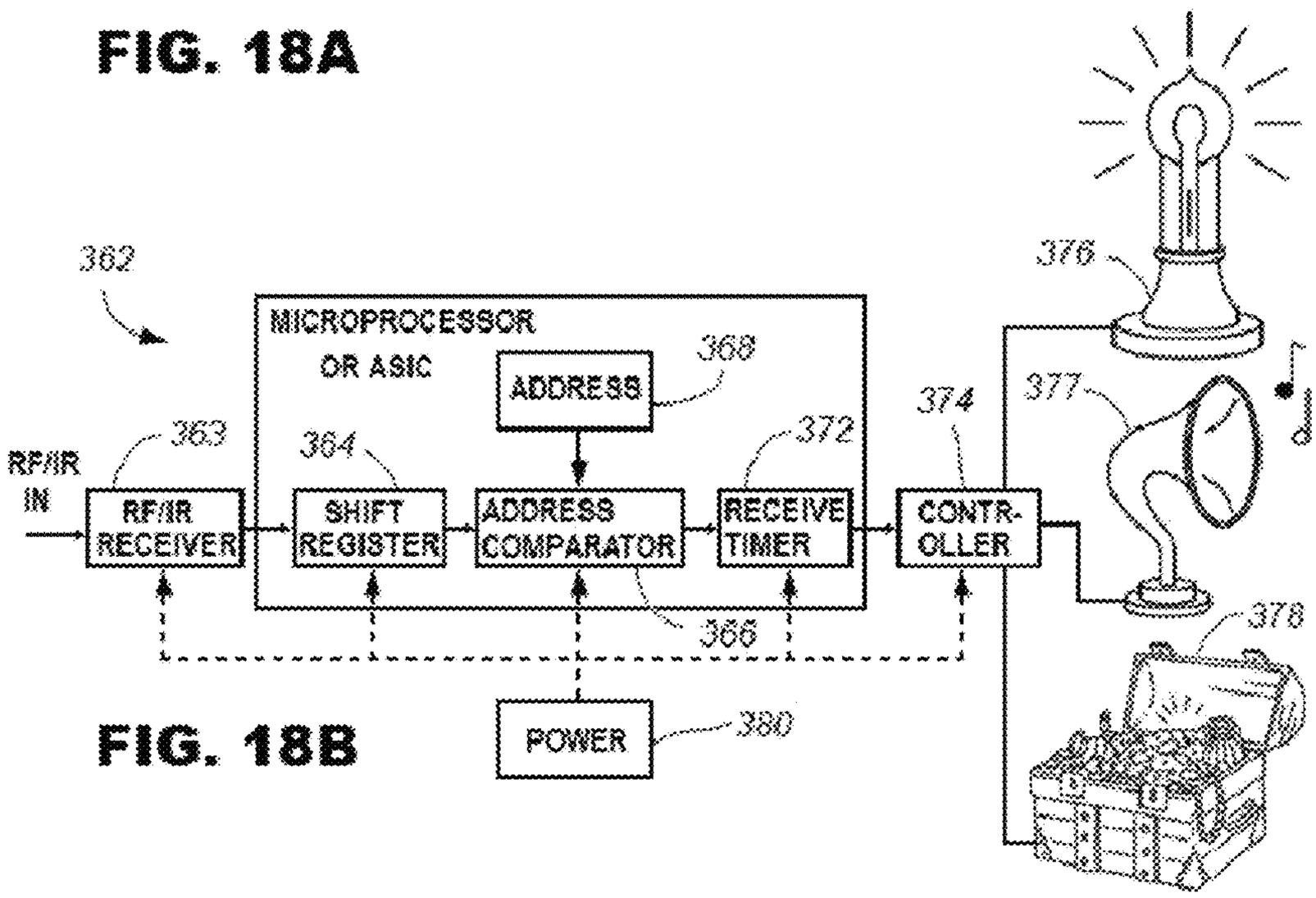

FIG. 18B

FIG. 18C

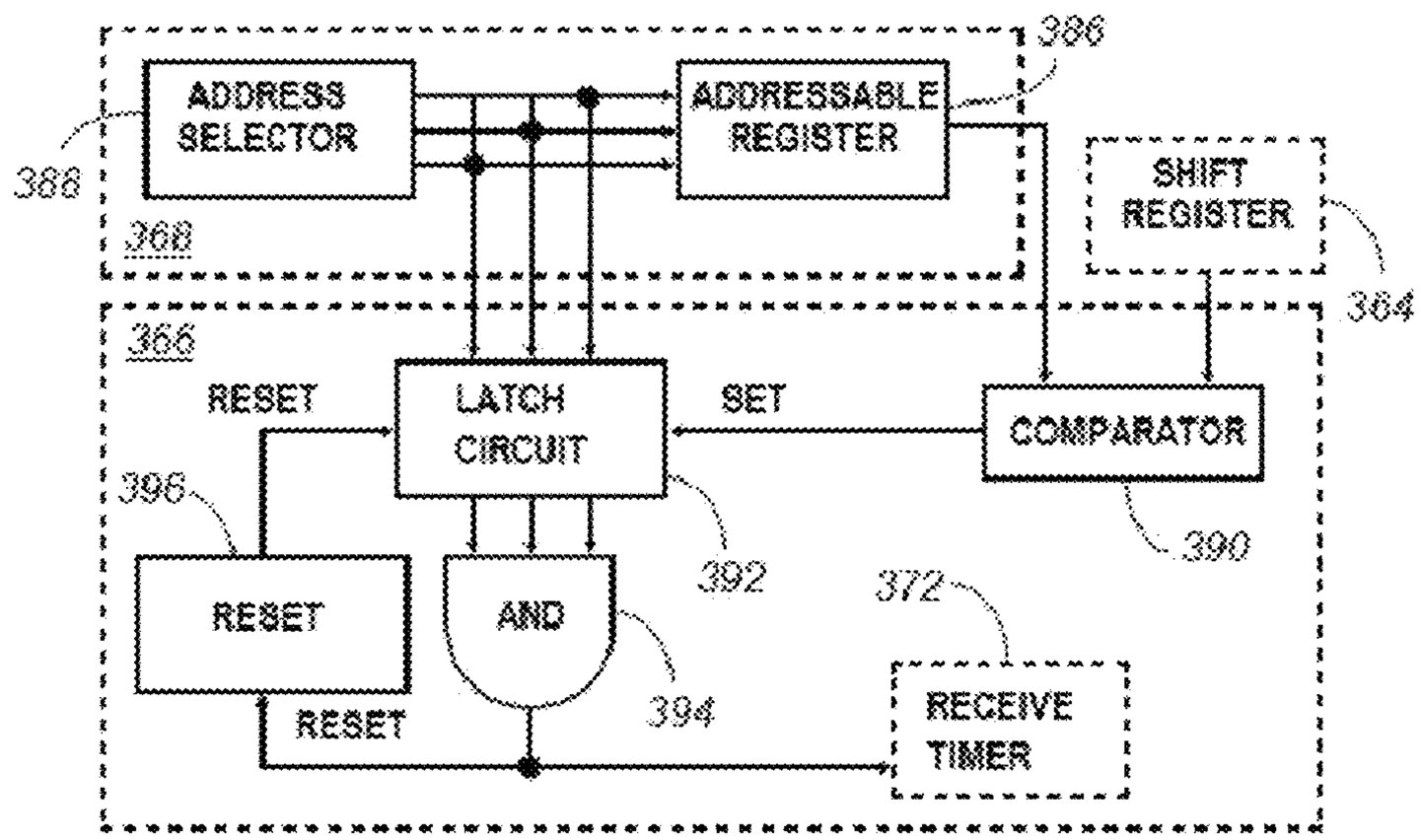

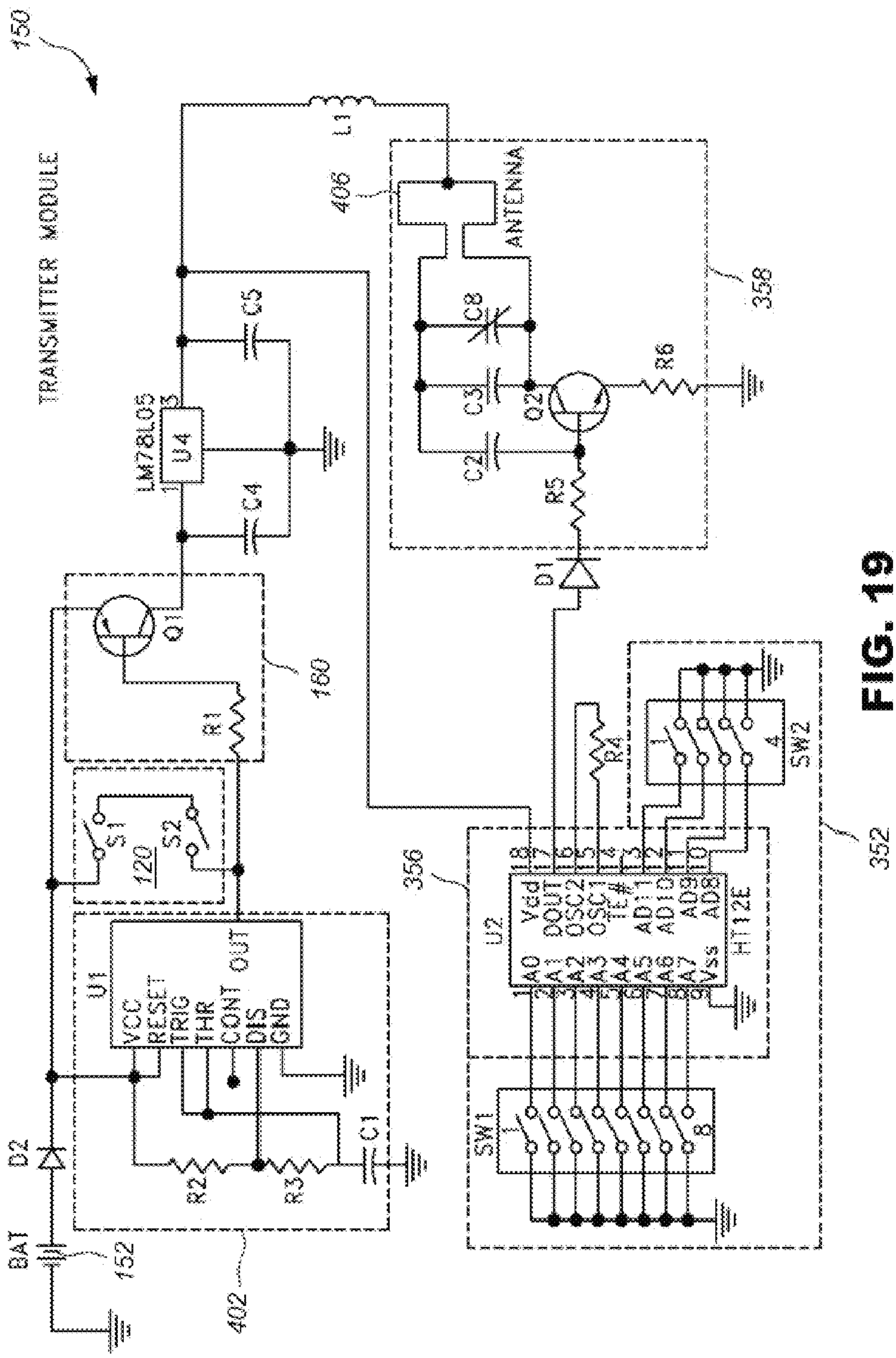
150
TRANSMITTER MODULE
L1
406
ANTENNA
358
C5
C8
C3
C2
Q2
R6
R5
LM78L05
U4
C4
D1
Q1
160
R1
S1
S2
120
R4
SW2
352
356
U2
HT12E
U1
VCC
RESET
TRIG
THR
CONT
DIS
GND
OUT
SW1
D2
R2
R3
C1
BAT
152
402

FIG. 19

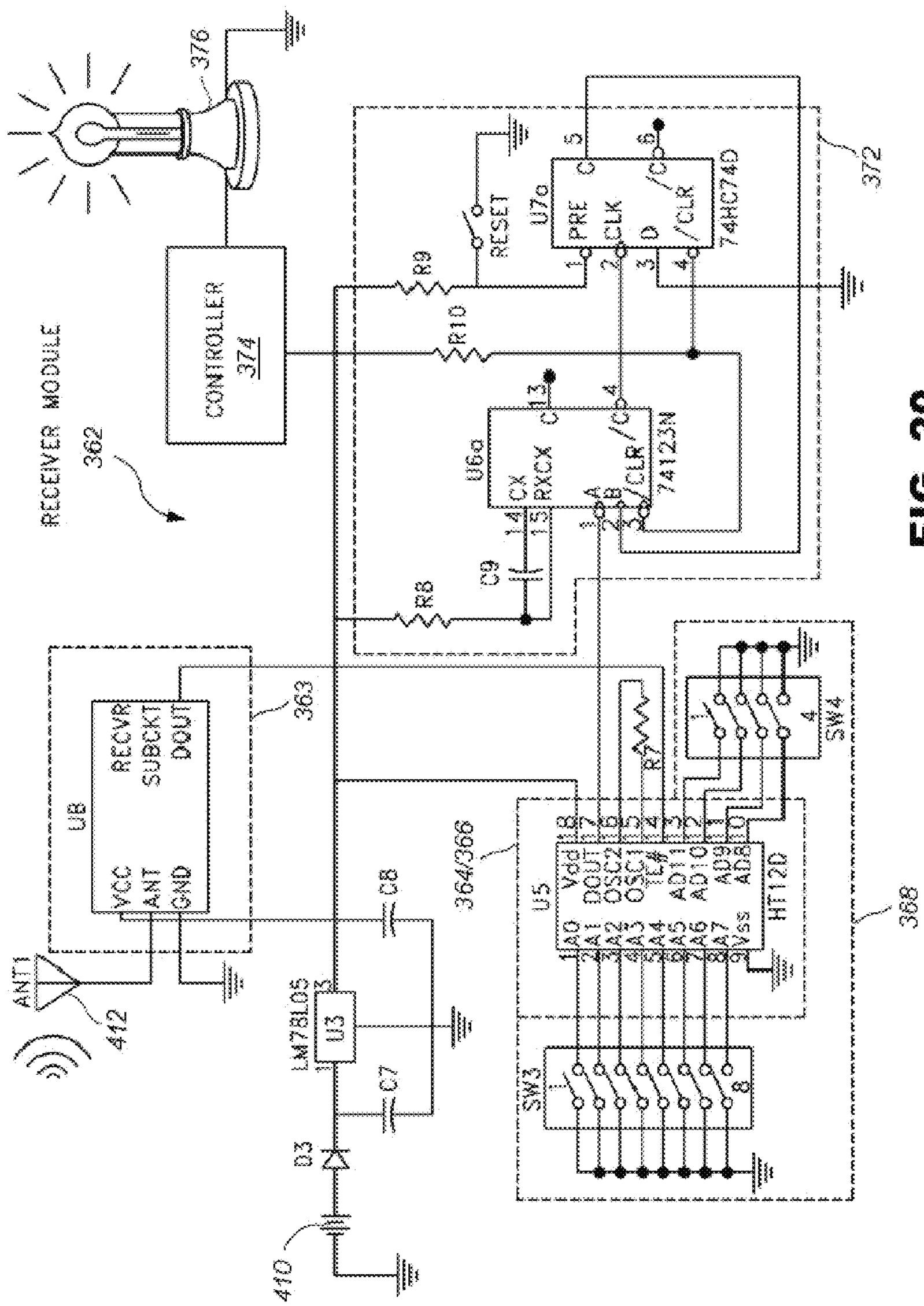
RECEIVER MODULE
362
376
CONTROLLER
374
RESET
U7a
PRE
CLK
D
/CLR
74HC74D
R9
R10
U6a
CX
RXCX
74123N
C9
R8
372
UB
RECVR
SUBCKT
DOUT
VCC
ANT
GND
363
C8
364/366
U5
Vdd
DOUT
OSC2
OSC1
TE
AD11
AD10
AD9
AD8
A0
A1
A2
A3
A4
A5
A6
A7
Vss
HT12D
R7
SW4
368
ANT1
412
LM78L05
U3
C7
D3
SW3
410

FIG. 20

INTERACTIVE GAMING TOY

RELATED APPLICATIONS

The present application is a continuation-in-part of U.S. patent application Ser. No. 14/720,080 filed May 22, 2015, which is a continuation application of U.S. patent application Ser. No. 14/464,652 filed Aug. 20, 2014, now U.S. Pat. No. 9,039,533 issued May 26, 2015, which is a continuation application of U.S. patent application Ser. No. 13/801,955 filed Mar. 13, 2013, now U.S. Pat. No. 8,814,688 issued Aug. 26, 2014, which is a continuation application of U.S. patent application Ser. No. 13/469,443, filed May 11, 2012, now U.S. Pat. No. 8,475,275 issued Jul. 2, 2013, which is a continuation application of U.S. patent application Ser. No. 13/037,200, filed Feb. 28, 2011, now U.S. Pat. No. 8,491,389 issued Jul. 23, 2013, which is a continuation application of U.S. patent application Ser. No. 11/777,874, filed Jul. 13, 2007, now U.S. Pat. No. 7,896,742, issued Mar. 1, 2011, which is a continuation application of U.S. patent application Ser. No. 11/274,760, filed Nov. 15, 2005, now U.S. Pat. No. 7,878,905, issued Feb. 1, 2011, which is a continuation-in-part of U.S. patent application Ser. No. 10/954,025, filed Sep. 29, 2004, now U.S. Pat. No. 7,445,550, issued Nov. 4, 2008, which is a continuation-in-part of U.S. patent application Ser. No. 10/397,054, filed Mar. 25, 2003, now U.S. Pat. No. 7,500,917, issued Mar. 10, 2009, each of which is hereby incorporated herein by reference in its entirety. U.S. patent application Ser. No. 10/889,974, filed Jul. 13, 2004, now U.S. Pat. No. 7,850,527, issued Dec. 14, 2010; U.S. patent application Ser. No. 09/792,282, filed Feb. 22, 2001, now U.S. Pat. No. 6,761,637, issued Jul. 13, 2004; and U.S. Provisional Application No. 60/184,128, filed Feb. 22, 2000 are all also hereby incorporated herein by reference in their entireties.

The present application also contains subject matter that is related to U.S. patent application Ser. No. 10/410,583, filed Apr. 7, 2003, now U.S. Pat. No. 6,967,566, issued Nov. 22, 2005, which is hereby incorporated herein by reference in its entirety.

BACKGROUND OF THE INVENTION

1. Field of the Invention

The present invention generally relates to children's games and, in particular, to interactive games, toys and play systems utilizing wireless transponders and receivers for providing a unique interactive game play experience.

2. Description of the Related Art

Games, toys, play systems and other similar entertainment devices are well known for providing play and interaction among children and adults. A variety of commercially available play toys and games are also known for providing valuable learning and entertainment opportunities for children, such as role playing, reading, memory stimulation, tactile coordination and the like. However, there is always a demand for more exciting and entertaining games and toys that increase the learning and entertainment opportunities for children and stimulate creativity and imagination.

SUMMARY OF THE INVENTION

Embodiments of the present invention provide a unique play experience carried out utilizing an interactive gaming toy that allows play participants to wirelessly interact with their surrounding play environment(s). The gaming toy may be used to play a game carried out in a physical play

environment, such as a play structure, play area or other area (either commercial or residential), as desired. It may also be used to play a game carried out in non-physical play environments, such as television, radio, virtual reality, computer games and the like. The physical play environment may be simply a themed play area, or even a multi-purpose area such as a restaurant dining facility, family room, bedroom or the like. The non-physical play environment (sometimes referred to herein as a "virtual" play environment) may be an imaginary environment (i.e., computer/TV generated). For example, a virtual play environment may be visually/aurally represented via computer animation. Optionally, multiple play participants, each provided with a suitable interactive gaming toy, may play and interact together to achieve desired goals, master certain skills and/or produce desired effects within the play environment.

In one embodiment an interactive gaming toy is provided comprising a physical toy, such as a toy wand, doll or action figure, configured with an RFID (radio frequency identification) transponder (sometimes referred to herein as a "tag") pre-programmed with a unique identifier. The unique identifier may uniquely identify the toy within an associated game, for example. The RFID tag may also be configured to store information describing certain attributes or abilities of a corresponding virtual character or object in a computer-animated game. The information stored on the RFID tag may also be supplemented or updated as the corresponding virtual character or object evolves or changes over time based on player performance and/or gameplay progression. The interactive gaming toy thus allows developed character attributes and the like to be stored and easily transported to other games and compatible gaming platforms.

In accordance with another embodiment an interactive gaming toy comprises a toy wand or other seemingly magical object which provides a basic foundation for a complex, interactive entertainment system. In one embodiment the toy wand comprises an elongated hollow pipe or tube having a proximal end or handle portion and a distal end or transmitting portion. An internal cavity may be provided to receive one or more batteries to power optional lighting, laser or sound effects and/or to power long-range transmissions such as via an infrared LED transmitter device or RF transmitter device. The handle portion and/or distal end of the toy wand may be fitted with an RFID transponder that is operable to provide relatively short-range RF communications (<60 cm) with one or more compatible receivers or transceivers. In one embodiment the transponder is pre-programmed with a unique identifier which may be used, for example, to identify and track individual play participants and/or wands within a play facility.

The RFID transponder or other identifying device is preferably used to store certain information identifying each play participant and/or describing certain powers or abilities possessed by an imaginary role-play character. In one embodiment players may advance in a magic-themed adventure game by finding clues, casting spells and solving various puzzles presented. Players may also gain (or lose) certain attributes, such as magic skills, magic strength, fighting ability, various spell-casting abilities, and combinations of the same or the like. All of this information is preferably stored on the RFID transponder and/or an associated database indexed by the unique RFID tag identifier so that the character attributes may be easily and conveniently transported to other similarly-equipped play facilities, computer games, video games, home game consoles, hand-held game units, and the like. In this manner, an imaginary

role-play character is created and stored on a transponder device that is able to seamlessly transcend from one play environment to the next.

In accordance with another embodiment one or more adjunct gaming items are provided, comprising collectable/tradable character cards, trinkets, tokens, coins, or the like. Each character card (or trinket, token, coin, etc.) may be configured with an RFID tag that stores certain information describing the powers or abilities of an imaginary role-play character that the gaming toy represents. In one embodiment, as each play participant uses a favorite character card to play a game in a compatible play facility, for example, the character represented by the card gains (or loses) certain attributes, such as magic skill level, magic strength, flight ability, various spell-casting abilities, etc. All of this information is preferably stored on the card so that the character attributes may be easily and conveniently transported to other similarly-equipped play facilities, computer games, video games, home game consoles, hand-held game units, and the like. In this manner, an imaginary role-play character is created and stored on a card that is able to seamlessly transcend from one play medium to the next.

In accordance with another embodiment one or more adjunct gaming items are provided, comprising trading cards depicting various real or imaginary persons, characters and/or objects. In one embodiment each card has recorded or stored thereon in an electronically readable format certain selected information pertaining to the particular person, character or object, such as performance statistics, traits/powers, or special abilities. The information is preferably stored on an RFID tag associated with each card and which can be read electronically and wirelessly over a predetermined range preferably greater than about 1 cm when placed in the proximity of a suitably configured RF reader. Optionally, the RFID tag may be read/write capable such that the information stored thereon may be changed or updated in any manner desired.

In accordance with another embodiment a computer adventure game is provided wherein game participants use RFID-enabled tokens as player tracking devices within the game. Each token has an RFID tag that uniquely identifies a corresponding player in the game and also preferably stores the player's progress in the game. Each player begins the adventure with essentially the same powers, skills and abilities. Each player may also receive an interactive gaming toy which the player must learn to use to accomplish certain goals set out in the game.

An authenticating password system may be used to verify or authenticate game events and to thereby discourage cheating. Authenticating passwords may be unique or semi-unique to the player(s) who possess them. For example, each password may be an encrypted alpha-numeric code that is mathematically derived from a unique ID number stored on each participating player's token. When the alpha-numeric number is subsequently re-entered into another device (for example, a home game console or home computer) by the authorized player, the game software can reverse the mathematical encryption algorithm using the player's unique ID number and thereby determine and/or validate the game event(s) that generated the authenticating password.

In accordance with another embodiment an RFID-enabled gaming system is provided that allows a game participant to earn points, levels, or upgrades in a first game, which are stored on an associated RFID-enabled token. The game participant is then able to use the RFID-enabled token and the stored points, levels, or upgrades to advance in a second RFID-enabled game. Players may also earn upgrades by purchasing certain retail items from a participating retail vendor, such as a fast-food restaurant. For example, a player may receive a token and/or an authenticating code in one or more retail transactions that enables the game participant to access levels, or upgrades in a popular video game. Authenticating codes may be printed on an ordinary cash register receipt, for example.

For purposes of summarizing the invention and the advantages achieved over the prior art, certain objects and advantages of the invention have been described herein above. Of course, it is to be understood that not necessarily all such objects or advantages may be achieved in accordance with any particular embodiment of the invention. Thus, for example, those skilled in the art will recognize that the invention may be embodied or carried out in a manner that achieves or optimizes one advantage or group of advantages as taught herein without necessarily achieving other objects or advantages as may be taught or suggested herein.

BRIEF DESCRIPTION OF THE DRAWINGS

Having thus summarized the general nature of the invention and its essential features and advantages, certain preferred embodiments and modifications thereof will become apparent to those skilled in the art from the detailed description herein having reference to the figures that follow, of which:

FIG. **1**A is an exploded assembly view of one embodiment of an interactive gaming toy configured with an RFID tag;

FIG. **1**B is a front plan view of the interactive gaming toy of FIG. **1**A;

FIG. **2**A is an exploded assembly view of an alternative embodiment of an interactive gaming toy having modular components configured with mating magnets for facilitating detachable assembly thereof;

FIG. **2**B is front plan view of a further alternative embodiment of an interactive gaming toy having an intermediate auxiliary component configured with a second RFID tag;

FIGS. **3**A and **3**B are front and back views, respectively, of a further alternative embodiment of an interactive gaming toy comprising an RFID-enabled key chain trinket;

FIG. **4** is an exploded assembly view of a further alternative embodiment of an interactive gaming toy comprising an RFID-enabled toy figure or doll;

FIG. **5** is a partially exploded assembly view of a further alternative embodiment of an interactive gaming toy comprising an RFID-enabled toy action figure;

FIG. **6** is a partially exploded assembly view of a further alternative embodiment of an interactive gaming toy comprising an RFID-enabled toy wand;

FIGS. **7**A and **7**B are time-sequenced illustrations of one embodiment of a magic-themed play environment configured to be used with the toy wand of FIG. **6** and comprising various interactive play effects;

FIG. **8**A is a partial schematic and exploded assembly view of one embodiment of the toy wand of FIG. **6**;

FIG. **8**B is a detail view of the handle portion and touch sensor elements of the toy wand of FIG. **8**A;

FIGS. **9**A-**9**B are time-sequenced illustrations of one embodiment of an interactive play effect configured to be actuated by the toy wand of FIG. **6**;

FIG. **9**C is an alternative embodiment of an interactive play effect configured to be actuated by the toy wand of FIG. **6**;

FIG. **10** is an exploded assembly view of a further alternative embodiment of an interactive gaming toy com-

prising a toy wand configured to be assembled from interchangeable modular components;

FIGS. **11**A-**11**E are illustrations showing various possible constructions, configurations and finishes of the modularly constructed toy wand of FIG. **10**;

FIG. **12** is a schematic illustration of an alternative embodiment of a magic-themed play environment configured to be used with the toy wand of FIG. **6**;

FIGS. **13**A and **13**B are front and back views, respectively, of one embodiment of an adjunct gaming item comprising an RFID-enabled character card;

FIG. **13**C is a screen shot of an embodiment of a computer-animated role-play adventure game configured to be used with the RFID-enabled character card of FIGS. **13**A-**13**B;

FIGS. **14**A and **14**B are front and back views, respectively, of one embodiment of an adjunct gaming item comprising an RFID-enabled trading card;

FIGS. **14**C and **140** illustrate alternative embodiments of an adjunct gaming item comprising an RFID-enabled trading card;

FIG. **15**A is a partial schematic illustration of an embodiment of a peripheral gaming device configured to be used with one or more associated RFID-enabled gaming toys or gaming items as disclosed herein;

FIG. **15**B is a partial schematic illustration of an alternative embodiment of a peripheral gaming device configured to be used with one or more associated RFID-enabled gaming toys or gaming items as disclosed herein;

FIG. **15**C is a partial schematic illustration of a further alternative embodiment of a peripheral gaming device configured to be used with one or more associated RFID-enabled gaming toys or gaming items as disclosed herein;

FIG. **16**A is a detail view of one embodiment of an RFID transponder device configured to be used in an RFID-enabled gaming toy or gaming item as disclosed herein;

FIG. **16**B is a schematic illustration of an RFID read/write unit configured for use with the RFID transponder device of FIG. **16**A;

FIG. **16**C is a simplified circuit schematic of the RFID read/write unit of FIG. **16**B;

FIG. **17**A is a detail view of an alternative embodiment of an RFID transponder device configured to be used in an RFID-enabled gaming toy or gaming item as disclosed herein;

FIGS. **17**B and **17**C are schematic illustrations of an RFID read/write unit configured for use with the RFID transponder device of FIG. **17**A;

FIG. **17**D is a simplified schematic diagram illustrating the basic organization and function of the electronic circuitry comprising the RFID tag illustrated in FIG. **17**A;

FIG. **18**A is a simplified schematic diagram of an RF/IR transmitter module;

FIG. **18**B is a simplified schematic diagram of an RF/IR receiver module and controller configured for use with the RF/IR transmitter module of FIG. **18**A;

FIG. **18**C is a simplified schematic diagram of an alternative embodiment of a portion of the RF/IR receiver module of FIG. **18**B;

FIG. **19** is a detailed electrical circuit schematic of an RF transmitter module configured to be incorporated into an interactive gaming toy as disclosed herein; and

FIG. **20** is a detailed electrical circuit schematic of an RF receiver module configured for use with the transmitter module of FIG. **19**.

DETAILED DESCRIPTION OF THE PREFERRED EMBODIMENTS

For convenience of description and for better clarity and understanding of the invention similar elements to those previously described may be identified with similar or identical reference numerals. However, not all such elements in all embodiments are necessarily identical as there may be differences that become clear when read and understood in the context of each particular disclosed preferred embodiment.

Interactive Gaming Toys

FIGS. **1**A and **1**B illustrate the basic construction of one embodiment of an interactive gaming toy **100***a* having features and advantages in accordance with the present invention. The gaming toy **100***a* generally comprises a portable toy figure or object **110***a* embodying, for example, a mythical creature such as a dragon **110***a*. Preferably, the toy figure or object **110***a* is small enough to be easily transported and manipulated by play participants, but not so small as to present a choking hazard for young children. If desired, the toy figure or object **110***a* may be mounted on and/or supported by a supporting structure **115***a*, as illustrated. This may be separately formed or integrally formed with the toy figure or object **110***a* as expedient or desired.

The toy figure or object **110***a* is preferably uniquely identified using one or more embedded or affixed RFID tags (described in more detail later). In one embodiment a glass-encapsulated RFID transponder **118** is disposed within an inner cavity formed within the toy figure or object **110***a* and/or supporting structure **115***a*. Transponder **118** is preferably passive (batteryless) and is operable to provide relatively short-range RF communications (less than about 200 cm) using one or more compatible RFID reader units or reader/writer units (described in more detail later). In one embodiment the transponder **118** is pre-programmed with a unique tag identifier and comprises non-volatile memory configured to store certain information identifying a play participant and/or describing certain powers or abilities possessed by an imaginary role-play character.

For example, players may advance in a magic-themed adventure game by finding clues, casting spells and solving various puzzles presented. Players may also gain (or lose) certain attributes, such as magic skills, magic strength, fighting ability, various spell-casting abilities, combinations of the same or the like, based on game play, skill-level and/or the purchase of collateral play objects. Some or all of this information is preferably stored on the RFID transponder **118** so that the character attributes may be easily and conveniently transported to various compatible play facilities, games, video games, home game consoles, hand-held game units, and the like. Alternatively, some or all of this information may be stored on a computer-accessible database indexed by the unique tag identifier.

The toy figure or object **110***a* and/or supporting structure **115***a* may further include securement means, such as threaded stud **121**, snap latches, mating magnets or the like, for receiving and securing one or more auxiliary components, such as a detachable knob **123***a*. For example, such auxiliary components may be purchased, selected and/or earned by play participants as they advance in a game and/or when they play different games. One example of an assembled gaming toy **100***a* is shown in FIG. **1**B.

FIGS. **2**A and **2**B illustrate possible alternative embodiments of an interactive gaming toy **100***b* (FIG. **2**A), **100***c* (FIG. **2**B) having features and advantages in accordance with the present invention. As with the gaming toy **100***a*

illustrated and described above, each interactive gaming toy **100***b* and **100***c* comprises a portable toy FIG. **110***b*, **110***c* embodying a mythical creature, such as a pixie **110***b* (FIG. **2**A) or a unicorn **110***c* (FIG. **2**B). These may be the same size or different sizes than the toy FIG. **110***a* (see FIG. **1**), as desired.

The gaming toy **100***b* (FIG. **2**A) also includes a glass-encapsulated transponder **118** pre-programmed with a unique tag identifier and having non-volatile memory configured to store certain information identifying a play participant and/or describing certain powers or abilities possessed by an imaginary role-play character. Transponder **118** is disposed within an auxiliary component comprising a detachable knob **123***b*. For example, the transponder **118** may be encapsulated in a colored epoxy, Lucite® acrylic glass (polymethyl methacrylate or PMMA) or the like and thereby disguised as a natural crystal or mineral/stone forming part of the detachable knob **123***b*. The knob **123***b* may include a magnet **117***a* and the toy figure or object **110***b* and/or supporting structure **115***b* may include a mating magnet **117***b* configured to removably secure the knob **123***b* and/or other compatibly-configured auxiliary components.

The gaming toy **100***c* (FIG. **2**B) may share a similar construction to the gaming toy **100***a* or **100***b* illustrated and described above. The gaming toy **100***c* further comprises an intermediate auxiliary component **125** positioned between the supporting structure **115***c* and the detachable knob **123***c*. This may be used as a handle, for example, for holding or carrying the gaming toy **100***c*. Optionally, the intermediate auxiliary component **125** may include a second RFID tag, such as an adhesive-backed RFID tag inlay **128** (described in more detail later) which may be affixed to the intermediate auxiliary component **125** and covered with an adhesive paper label **127**. Alternatively, the RFID tag inlay **128** may be molded directly into a substrate from which the intermediate auxiliary component **125** is formed.

Another possible embodiment of an interactive gaming toy is illustrated in FIGS. **3**A-**3**B. The interactive gaming toy **100***d* generally comprises a key chain trinket **110***d* depicting, for example, a mythical character such as a magical wizard. The key chain trinket **110***d* may be mounted on a key chain **115***d*, as illustrated, for removably attaching the gaming toy **100***d* to a key ring (not shown). The key chain trinket **110***d* is uniquely identified by an adhesive-backed RFID tag inlay **128** which is affixed to the back side of the key chain trinket **110***d*, as illustrated in FIG. **3**B. Alternatively, the RFID tag inlay **128** may be molded directly into the substrate from which the key chain trinket **110***d* is formed. The RFID tag **128** is preferably pre-programmed with a unique tag identifier and contains non-volatile memory configured to store certain information identifying a play participant and/or describing certain powers or abilities possessed by an imaginary role-play character.

For example, character attributes developed during a play participant's visit to a local play facility may be stored on the tag **128**. When the play participant then revisits the same or another compatible play facility, all of the attributes of his character are "remembered" on the tag **128** so that the play participant is able to continue playing with and developing the same role-play character. Similarly, various video games, home game consoles, and/or hand-held game units can be and preferably are configured to communicate with the tag **128** in a similar manner as described above and/or using other well-known information storage and communication techniques. In this manner, a play participant can use the same role play character he or she has developed with specific associated attributes in a favorite video action game, role-play computer game or the like.

Another possible embodiment of an interactive gaming toy is illustrated in FIG. **4**. The interactive gaming toy **100***e* generally comprises a toy figure or doll **110***e* embodying, for example, a mythical character such as a gnome. The toy figure or doll **110***e* may be mounted on and/or supported by a supporting structure **115***e*, in this case a simulated stack of books. The supporting structure **115***e* may be separately formed or integrally formed with the toy figure or doll **110***e* as expedient or desired. The toy figure or doll **110***e* is uniquely identified using an adhesive-backed RFID tag inlay **128** which is affixed to an outer surface of the toy FIG. **110***e* or supporting structure **115***e*. Alternatively, the RFID tag inlay **128** may be molded directly into the substrate from which the toy FIG. **110***e* or supporting structure **115***e* is formed. The RFID tag **128** is preferably pre-programmed with a unique tag identifier and contains non-volatile memory configured to store certain information identifying a play participant and/or describing certain powers or abilities possessed by an imaginary role-play character.

Another possible embodiment of an interactive gaming toy is illustrated in FIG. **5**. The interactive gaming toy **100***f* generally comprises a toy action FIG. **110***f* embodying, for example, a mythical creature such as a dragon. The toy action FIG. **110***f* is uniquely identified using a glass-encapsulated RFID transponder **118** which is disposed within an inner cavity formed within the toy action FIG. **110***f*. The transponder **118** is preferably pre-programmed with a unique tag identifier and comprises non-volatile memory configured to store certain information identifying a play participant and/or describing certain powers or abilities possessed by an imaginary role-play character.

For example, play participants may use the gaming toy **100***f* to electronically and "magically" interact with their surrounding play environment to achieve desired goals or produce desired effects within a suitably-configured play environment. Use of the gaming toy **100***f* may be as simple as touching it to a particular surface or "magical" item within the play environment or it may be as complex as moving or shaking the gaming toy **100***f* in a particular manner and/or orienting it relative to a certain item desired to be "magically" transformed or otherwise affected. For example, various wireless receivers (described in more detail later) may be provided within a physical play environment and configured so as to allow play participants to activate various associated play effects and/or to play a game using the gaming toy **100***f*. As play participants play and interact within each play environment they learn more about the "magical" powers possessed by the gaming toy **100***f* and become more adept at using the gaming toy **100***f* within various game contexts to achieve desired goals or produce desired play effects. Optionally, play participants may collect points or earn additional magic levels or ranks for each play effect or task they successfully achieve. In this manner, play participants may compete with one another to see who can score more points and/or achieve the highest magic level.

If desired, an optional RF/IR module **150** (described in more detail later) may be provided for long-range wireless communications (up to about 100 meters). If line of sight or directional actuation is desired, an infrared LED transmitter of the type employed in standard television remote controls may be provided instead of or in addition to an RF transmitter, as those skilled in the art will readily appreciate. Of course, a wide variety of other wireless communications

devices, as well as various optional sound and lighting effects may also be provided, as desired.

Operation of the RF/IR module **150** (and/or other wireless communication devices described herein) may be controlled by motion-sensitive internal activation circuitry **120** (described in more detail later). For example, activation circuitry **120** may be configured to allow the gaming toy **100***f* to be operated by moving or manipulating it in a particular manner. If provided, these operational aspects would need to be learned by play participants as they train in the various play environments. One goal, for example, may be to become a master dragon trainer. This means that the play participant has learned and mastered every aspect of operating the gaming toy **100***f* to produce desired effects within each play environment. Of course, additional effects and operational nuances can (and preferably are) always added over time in order to keep the interactive experience fresh and continually changing. The gaming toy **100***f* may also be configured to respond to other signals, such as light, sound, or voice commands as will be readily apparent to those skilled in the art.

Another possible embodiment of an interactive gaming toy is illustrated in FIG. **6**. The interactive gaming toy **100***g* generally comprises a toy wand comprising a wand shaft **110***g* and one or more auxiliary components such as a detachable handle **115***g* and a detachable knob **123***g*. The toy wand **100***g* is uniquely identified using a glass-encapsulated RFID transponder **118** which is disposed within an inner cavity formed in the wand shaft **110***g* or detachable handle **115***g*. Preferably the transponder **118** is pre-programmed with a unique tag identifier and comprises non-volatile memory configured to store certain information identifying a play participant and/or describing certain powers or abilities possessed by an imaginary role-play character.

Play participants may use the toy wand **100***g* to electronically and "magically" interact with a suitably configured play environment to achieve desired goals or produce desired effects. For example, FIGS. **7**A-**7**B illustrate one embodiment of a magic-themed play environment comprising multiple play effects **200**, such as a talking rabbit **201**, a magic hat **202**, a crystal ball **203**, an enchanted book **204**, and a shooting-gallery-style play effect **205** having one or more targets **206**. These may be physical play objects configured with special effects and/or they may be graphical or computer-generated images displayed, for example, on one or more associated computer monitors, TV monitors, DVD display monitors, or computer gaming consoles and the like. Those skilled in the art will readily appreciate from the disclosure herein that all of these effects and many other possible play effects may be actuated or controlled by toy wand **100***g* in conjunction with one or more RF receivers, RFID reader/writers and/or other devices disclosed and described herein.

Use of the toy wand **100***g* may be as simple as touching it to a particular surface or "magical" item within the play environment or it may be as complex as moving or manipulating the toy wand **100***g* in a particular manner and/or pointing it accurately at a certain item desired to be "magically" transformed or otherwise affected. For example, various wireless receivers (described in more detail later) may be distributed throughout a play facility so as to allow play participants to activate various associated play effects and/or to play a game using the toy wand **100***g*. As play participants play and interact within each play environment they learn more about the "magical" powers possessed by the toy wand **100***g* and become more adept at using the toy wand **100***g* within various game contexts to achieve desired goals or produce desired play effects. Optionally, play participants may collect points or earn additional magic levels or ranks for each play effect or task they successfully achieve. In this manner, play participants may compete with one another to see who can score more points and/or achieve the highest magic level. Play participants may also access a web site in order to register the toy wand and play an online interactive game. Preferably this is a relatively simple game intended to provide a basic training session. In this on-line game session, the player may learn how to use the toy wand **100***g* to cast various spells and trigger various effects within an interactive computer-gaming environment provided by an ordinary home computer. The player may also learn how to discover important clues needed to advance in the game and to solve various puzzles or challenges presented by the game.

If desired, an optional RF/IR module **150** (described in more detail later) may be provided for long-range wireless communications (up to about 100 meters), as illustrated in FIG. **6**. If line of sight or directional actuation is desired, an infrared LED transmitter of the type employed in standard television remote controls may be provided instead of or in addition to an RF transmitter, as those skilled in the art will readily appreciate. Of course, a wide variety of other wireless communications devices, as well as various optional sound and lighting effects may also be provided, as desired. Operation of the RF/IR module **150** (and/or other wireless communication devices described herein) may be controlled by motion-sensitive internal activation circuitry **120** (described in more detail later). For example, activation circuitry **120** may be configured to allow the toy wand **100***g* to be operated by waving, shaking, stroking and/or tapping it in a particular manner. If provided, these operational aspects would need to be learned by play participants as they train in the various play environments. One goal, for example, may be to become a "grand wizard" or master of the wand. This means that the play participant has learned and mastered every aspect of operating the toy wand **100***g* to produce desired effects within each play environment.

Of course, additional effects and operational nuances can (and preferably are) always added over time in order to keep the interactive experience fresh and continually changing. Optionally, the toy wand **100***g* may be configured with an LCD display screen (not shown). The toy wand **100***g* may also be configured to respond to other signals, such as light, sound, or voice commands as will be readily apparent to those skilled in the art. Additional preferred embodiments, details and functionalities of the toy wand **100***g* are described below, having reference to FIGS. **8**-**12**.

As illustrated in more detail in FIG. **8**A, the toy wand **100***g* essentially comprises an elongated hollow pipe or tube **111** having a proximal end **112** and a distal end **114**. An internal cavity **116** is preferably provided to receive and safely house various circuitry for activating and operating the toy wand and various wand-controlled effects (described later). Batteries, optional lighting, laser or sound effects and/or the like may also be provided and housed within cavity **116**, if desired, as will be described in more detail later. An optional button (not shown) may also be provided, if desired, to enable particular desired functions, such as sound or lighting effects or longer-range transmissions. While a hollow metal or plastic tube **111** is preferred, it will be appreciated that virtually any other mechanical structure or housing may be used to support and contain the various components and parts described herein, including integrally molded or encapsulated containment structures such as epoxy resins and the like. If a metal tube is selected, care

must be taken to ensure that it does not unduly interfere with any of the magnetic, RFID or RF/IR devices described herein. Thus, for example, any RF antennas should preferably be mounted near or adjacent an end opening and/or other opening of the tube **111** to ensure adequate operating range and desired directionality.

The proximal end **112** of tube **111** is preferably adapted to secure the tube **111** to an optional handle **115***g* or other mating component. The handle **115***g* may further include securement means, such as threaded stud, snap latches, mating magnets **117***a*, **117***b* or the like, for receiving and securing an optional decorative knob **123***g*. For example, knobs **123***g* may be purchased, selected and/or earned by play participants as they advance in a game and/or when they play different games. An RFID transponder **118** is provided and contained within the wand shaft **110***g* and/or in the handle **115***g*, as illustrated. The transponder **118** is pre-programmed with a unique identifier such as a unique person identifier number ("UPIN"). The UPIN may be used to identify and track individual toy wands **100***g* and/or play participants. Optionally, each tag **118** may also include a unique group identifier number ("UGIN") which may be used to match a defined group of individuals having a predetermined or desired relationship.

The RFID transponder **118** is preferably used to store certain information identifying each play participant and/or describing certain powers or abilities possessed by an imaginary role-play character. For example, players may advance in a magic adventure game by finding clues, casting spells and solving various puzzles presented. Players may also gain (or lose) certain attributes, such as magic skills, magic strength, fighting ability, various spell-casting abilities, combinations of the same or the like, based on game play, skill-level and/or the purchase of collateral play objects. Some or all of this information is preferably stored on the RFID transponder **118** so that the character attributes may be easily and conveniently transported to various compatible play facilities, games, video games, home game consoles, hand-held game units, and the like. Alternatively, only the UPIN and/or UGIN are stored on the transponder **118** and all other desired information is stored on a computer-accessible database indexed by UPIN and/or UGIN, for example. Placing the RFID tag **118** in the handle **115***g*, as illustrated, allows for modular construction and functionality of the toy wand **100***g* as auxiliary handles may be interchanged having other unique RFID tags with unique stored information. Optionally, the tag-containing handle **115***g* and knob **123***g* may be omitted altogether in the case, for example, where a less expensive toy wand is desired.

An optional RF/IR module **150** (described in more detail later) may be provided for long-range wireless communications (up to about 100 meters). If line of sight or directional actuation is desired, an infrared LED transmitter of the type employed in standard television remote controls may be provided instead of or in addition to an RF transmitter, as those skilled in the art will readily appreciate. In the latter case, a hole (not shown) would preferably be provided in the distal end **114** of the shaft **110***g* to accommodate the transmitting LED of the IR transmitter circuit (described in more detail later). Of course, a wide variety of other wireless communications devices, as well as various optional sound and lighting effects may also be provided, as desired.

Operation of the RF/IR module **150** (and/or other wireless communication devices described herein) may be controlled by internal activation circuitry comprising, in the particular embodiment illustrated, a pair of series-connected tilt sensors **122** and **124** (represented in the corresponding schematic diagram as switches S**1** and S**2**, respectively). For example, a pair of micro-ball tilt sensors may be arranged within the cavity **116** in opposite orientations and spaced apart, as illustrated. Those skilled in the art will appreciate that in virtually any static position of the toy wand **100***g* at least one of tilt sensors **122**, **124** will be in the OFF state. Thus, the RF/IR module **150** can essentially only be activated when the toy wand **100***g* is in a non-static condition or, in other words, when it is in motion. The placement and orientation of the tilt sensors **122**, **124** is preferably such that different accelerations or motions are required at the proximal and distal ends **112** and **114** in order for both tilt sensors **122**, **124** to be in their ON positions (or OFF positions, as the case may be) and, thus, to enable or activate RF/IR module **150** (or other wireless communication devices described later).

Of course, those skilled in the art will appreciate from the disclosure herein that the activation circuitry is not limited to those including micro-ball tilt sensors, as illustrated, but may be practiced using a wide variety of other motion and/or tilt sensors and/or other supporting circuitry elements and components that are selected and adapted to the purposes described herein. These include, without limitation, gyro-sensors, vibration sensors, and accelerometers. Moreover, any one or more of these and/or other similar sensor devices may also be used in conjunction with other supporting circuitry elements or components (either internal or external to the toy wand **100***g*) as desired, including microprocessors, computers, controller boards, PID circuitry, input/output devices, combinations of the same and the like.

Those skilled in the art will also readily appreciate and understand from the disclosure herein that various additional and/or alternative activation circuits can be designed and configured so as to respond to different desired motions. For example, this may be achieved by adding more sensors and/or by changing sensor positions and orientations. For example, one motion may trigger a first activation circuit (and a first interactive play effect) while a different motion may trigger a second activation circuit (and a second interactive play effect). The number, type and complexity of motions and corresponding activation circuits are limited only by design and cost considerations and user preferences. Of course, those skilled in the art will recognize from the disclosure herein that multiple activation circuits may share one or more sensors and/or other supporting circuitry and components, as required or desired. Alternatively, a single, multi-mode activation circuit may be provided that can respond to multiple motions.

Furthermore, the activation circuit may comprise a microprocessor that communicates with the sensors **122**, **124** and the transmitter module **150**. In one embodiment, the microprocessor receives at least one signal from the sensors **122**, **124** indicative of the state of the sensors. For instance, the microprocessor may determine when each of the sensors **122**, **124** are in an ON or an OFF state or when one of the sensors **122**, **124** switches states. Based on the states of the sensors **122**, **124**, the microprocessor then outputs a signal to the transmitter module **150** that causes activation or deactivation of the transmitter module **150**.

In another embodiment, the microprocessor is capable of measuring a duration of time related to the operational states of the sensors **122**, **124**. For example, the microprocessor may use a clock signal or an external timer to determine the duration of time during which at least one of the sensors **122**, **124** is in an ON state. The microprocessor may then use this duration of time when outputting a signal to the transmitter module **150**. For example, the microprocessor may correlate

the duration of time that a sensor **122**, **124** is activated (for example, in an ON state) with an intensity, level, or type of a "spell" being cast by the user. For instance, if the user, while "casting a spell," is able to move the toy wand **100***g* so as to keep at least one of the sensors **122**, **124** activated for a certain period of time, the microprocessor may assign a particular level or intensity to the spell being cast. Thus, the microprocessor may output different signals, which represent different spells or spell intensities, to the transmitter module **150** based on the length of time of the sensor activation. In one embodiment, the microprocessor may associate longer durations of sensor activation with higher intensity spells.

In yet other embodiments of the invention, the duration of time during or between activation of the sensors **122**, **124** is output to a receiver external to the wand **100**. The receiver then processes the duration of time in determining which effect, or which level of an effect, is caused by the particular wand activation motions and associated duration(s) of time. In yet other embodiments, the foregoing microprocessor may be used in a toy wand **100***g* comprising a transponder **118** instead of, or in combination with, the transmitter module **150**.

If desired, the RFID transponder **118** may also be electronically interlocked and controlled by an activation circuit such as illustrated and described above. For example, the RFID transponder **118** may be selectively activated or deactivated via an optional external interrupt/disable line **260** (see FIG. **15**A). More preferably, however, the tag **118** is not interlocked, but is always activated. In this manner, transponder **118** can be easily read at short range (<60 cm) using an RFID reader/writer (described later) to sense and track play participants and/or to activate various simple effects.

In another embodiment, the wand **100***g* may be configured to operate in an "active" mode or a "sleep" mode. During the sleep mode, the activation circuit does not engage in significant activity, which reduces the energy consumption of the toy wand **100***g*. However, when the RFID tag **118** is brought within range of an RF transmitter, such as positioned near an effects controller, the RFID tag **118** receives a transmitted RF signal and "awakens" the activation circuit into the "active" state. If desired, the toy wand **100***g* may be further configured with a light or sound effect capable of producing a perceptible signal, such as a light or a noise, to alert the user when the toy wand **100***g* awakens to an "active" mode.

The toy wand **100***g* may be powered by one or more internal batteries (not shown). Optionally, it may be powered by an external energy source such as via a magnetic inductance energy generator **162**. The magnetic inductance energy generator **162** comprises an inductance coil L**1** sized and arranged such that when it is exposed to a fluctuating magnetic field (for example, a moving permanent magnet **164** rubbed back and forth and/or an externally generated electromagnetic field) an alternating current is generated. This generated current is rectified by diode D**1** or, alternatively, a full wave bridge rectifier (not shown), and charges preferably an electrolytic capacitor C**1** until it reaches a predetermined operating voltage (V+). If desired, a voltage regulator device, such as a zener diode (not shown) and/or active regulation circuitry may be added to stabilize and increase the efficiency of the magnetic inductance energy generator **162**.

Alternatively, those skilled in the art will appreciate from the disclosure herein that various magnetic field effect sensors, such as Wiegand sensors and the like, may readily be used in place of or in addition to inductor L**1** where, for example, it is desired to increase the energy-generating efficiency of the circuit **162**. For example, U.S. Pat. No. 6,191,687 to Dlugos discloses a Wiegand effect energy generator comprising a Wiegand wire that changes its magnetic state in response to being exposed to an alternating magnetic field. The Wiegand wire has core and shell portions with divergent magnetic properties. The magnetic properties of the wire are such that it produces an output power signal that corresponds to the strength and rate of change of a magnetic field to which the Wiegand wire is exposed. Such energy pulses generally are between about 5 and 6 volts and 10 microseconds in width. Such energy pulses have sufficient voltage and duration to power a low power transmitter such as RF/IR module **150**. One suitable Wiegand sensor that may be utilized in accordance with the present invention is the series 2000 sensor sold by EHD Corp. The Series 2000 Wiegand sensor produces pulses in response to alternating magnetic fields or permanent magnets that pass near the sensor. Alternatively, a piezoelectric energy generator (not shown) may be substituted for the magnetic inductance energy generator **162**. See, for example, FIGS. 9-11 of U.S. Pat. No. 9,039,533 and the accompanying discussion.

The energy generating circuit **162** is preferably such that the toy wand **100***g* has no movable parts and requires no maintenance such as replacing batteries or the like over its anticipated life. All energy is generated, for example, by placing the toy wand within an externally generated electromagnetic field. Preferably, the inductor L**1** (or Wiegand wire) and capacitor C**1** are selected such that 5-10 seconds of exposure to an external fluctuating magnetic field will fully charge the capacitor C**1**, thus enabling the RF/IR transmitter **150** to be activated at least once and preferably 5-20 times without having to recharge. Advantageously, the absence of replaceable batteries or other visible electronic technology significantly increases the reality and full immersion experience of the magical fantasy and gives users the feeling of practicing, performing and mastering "real" magic using a "real" magic wand. Optionally, a non-replaceable permanent rechargeable battery and/or a factory replaceable battery (not shown) may be provided in place of or in addition to the energy generating circuit **162** where it is desired to provide long-term energy storage.

In certain applications, it may be desirable to wirelessly communicate specific data and commands to achieve different or varied interactive effects. For example, it may desirable to wirelessly send one command signal that turns a certain object (for example, a lamp) "OFF" and another command signal that turns an object "ON." As described above, this functionality may be achieved using multiple activation circuits (or a single multi-mode activation circuit) responsive to various motions whereby each motion, if executed successfully, causes a different RF or IR signal to be transmitted to control or activate the desired effect (for example, turning a light ON or OFF or simulating the levitation of an object).

Another convenient way to achieve similar functionality is to load data bits representing specific desired commands directly into a data buffer of RF/IR module **150** and then, using only a single wand activation circuit and a single learned wand motion, cause an RF or IR signal to be transmitted, thereby carrying the command signal and data to an RF or IR receiver and associated effect. In one embodiment, one or more tilt sensors **192**, **194** (illustrated schematically as switches S**3**/S**4**) may be provided in a convenient location within the toy wand **100***g* (for example,

within the handle **115***g*). These sensors are preferably mounted and oriented at different angles from one another such that axial rotation of the wand shaft **110***g* and/or wand handle **115***g* causes the sensors to alternately switch from their ON to their OFF state. As illustrated in the circuit schematic accompanying FIG. **8**A, each sensor controls one data input bit of the RF/IR module data bus (for example, S**3**, S**4**). Those skilled in the art will readily appreciate that in this manner, four possible wand orientations are possible resulting in four unique sensor pair states as follows: ON/ON; OFF/OFF; ON/OFF and OFF/ON. These four sensor states can represent, for example, four unique command signals sent using the RF/IR module **150**. Where it is desired to send a larger number of unique command signals, various combinations of additional orientation sensors and/or activation circuits may be added, as desired. Alternatively, various dials, switches and/or other inputs may be provided for selecting from a number of unique commands or "spells."

In one embodiment an auxiliary component **207** is provided and is configured with optional touch sensor elements **208**, **210**, **212** for selecting one or more commands. Touch sensor elements **208**, **210**, **212** (represented in the accompanying schematic as S**3**, S**4**, S**5**) comprise solid-state electronic switches (no buttons or moving parts) that are activated by the simple touch of a finger. Most preferably, these are solid state touch switches of the type illustrated and described in U.S. Pat. No. 4,063,111 to Dobler et al., the entire contents of which are incorporated herein by reference. As illustrated in more detail in FIG. **8**B, each touch switch contact element **208**, **210**, **212** is preferably formed from a pair of conductive electrodes **211** surrounded by, and preferably flush with, an insulating material **213**. If desired, the electrodes **211** may be shaped in the form of magic symbols or other shapes consistent with a desired magic theme, as illustrated. During use, the user's finger is placed over the pair of electrodes **211** and thereby forms a portion of an electronic circuit to change the state of a corresponding solid state electronic switching device Q**1**, Q**2**, Q**3** in communication therewith, such as a MOSFET or PNP transistor. The touch sensor is thereby actuated.

Each touch sensor preferably controls one data input bit of the RF/IR module data bus (for example, S**3**, S**4**, S**5**). One or more touch switches **208**, **210**, **212** may be activated during a single transmission. Thus, those skilled in the art will readily appreciate that eight possible combinations of touch switch activations are possible corresponding to eight unique command input data sets as follows: ON/ON/ON; OFF/OFF/ON; ON/OFF/ON, OFF/ON/ON, ON/ON/OFF; OFF/OFF/OFF; ON/OFF/OFF, and OFF/ON/OFF These eight sensor states can represent, for example, eight unique command signals sent using the RF/IR module **150**.

Optionally, toy wand **100***f* may include a magnetic tip **216**, as illustrated in FIG. **8**A. This can be especially useful and entertaining for close-range activation of various play effects, such as turning lights on/off, triggering special sound and/or lighting effects. For example, FIGS. **9**A-**9**B are time-sequenced illustrations of one embodiment of a magnetically actuated lighting effect using the interactive wand toy **100***g* with optional magnetic tip **216**. A magnetic reed switch **218** is provided in series between the desired lighting effect **226** and a power source (V+). The reed switch is constructed in the normal fashion. Contacts **222**, **224** are normally open and, thus, the lighting effect **226** is in its OFF state. But, when the magnetic tip **216** of wand **100***g* is brought into relatively close proximity (2-3 cm) with the reed switch **218**, contact elements **222**, **224** are magnetized by the magnetic field lines and are drawn toward each other. This causes the contacts **222**, **224** to immediately attract, closing the gap and completing the circuit to turn on the lighting effect **226**. Of course, those skilled in the art will appreciate from the disclosure herein that various relays, power controllers and the like may be required or desirable to provide adequate control of larger, more complex effects. But all such effects, no matter how small/simple or large/complex, may be triggered with a simple reed switch **218** and a wand **100***g* having a magnetic tip **216**, as described above.

The magnetic tip **216** is especially useful and synergistic in combination with the other disclosed functions and features of wand **100***g*. Thus, for example, as illustrated in FIG. **9**C, a desired lighting effect **226** is controlled by RF/IR receiver **250** (described in more detail later), which is adapted to receive an RF and/or IR command signal from wand **100***g*. The RF/IR receiver **250** (and/or the lighting effect **226**) is also controlled by series-connected magnetic reed switch **218**, as illustrated and described above (FIGS. **9**A, **9**B). Desirably, this allows a user to use the wand **100***g* and the magnetic tip **216** thereof to select one or more effects he or she wishes to control or activate. For example, the closure of the magnetic reed switch **218** may send an activation signal to RF/IR receiver **250**. In response, the receiver initiates a timer (for example, 5-10 seconds) wherein its RF and/or IR receiver circuitry is activated and ready to receive one or more transmitted commands for controlling the associated effect **226**. Thus, a user may select to control the lighting effect **226** by activating the reed switch **218** with the magnetic tip **216** of toy wand **100***g*. Then the user may cast a spell (cause the wand **100***g* to transmit an RF or IR command signal) that commands the RF/IR receiver **250** to turn the lighting effect ON or OFF, to change the lighting effect (for example, change its color or intensity), and/or launch a related effect (for example, simulated levitation of the lighting source or other desired effects). In this manner, users can maintain direct and precise control over any number of individual play effects as may be desired.

Preferably, all or most of the components comprising toy wand **100***g* are standardized, modularized and interchangeable, as illustrated in FIG. **10**, so that various prefabricated components and starting materials can be stocked (for example, in a "wizards workshop") and individually purchased by users to create an endless variety of unique and individualized finished toy wands having evolving powers, abilities and/or aesthetics. Materials and components may be simple in outward appearance and preferably contain no conspicuous outward manifestations (or have only minimal outward manifestations) of the technology within. Materials and components fabricated from natural or simulated natural materials, such as wood, bone and leather, minerals (metals) and crystals are particularly preferred, although certainly not required.

The base component may comprise the wand shaft **110**, for example. This may be a hollow plastic, wood or metal shaft provided in various materials and colors. For beginners or entry level users, a finished toy wand may be constructed by simply selecting a wand shaft **110** and then fitting it with one or more magnetic end caps **216**, as illustrated. This provides an entry level toy wand (Level-1) that can be used to activate a variety of simple effects such as illustrated and described above in connection with FIGS. **9**A-**9**B. A Level-1 toy wand constructed in this fashion preferably facilitates basic game play within a compatible play facility, but is not

fully functional and, therefore, may not be capable of achieving some of the more desirable play effects or play experiences available.

The next level toy wand (Level-2) would preferably include, in addition, a simple passive RFID transponder **118** inserted and secured at one end thereof. The transponder **118** provides relatively short-range RF communications and also stores a unique person identifier number ("UPIN") and an optional unique group identifier number ("UGIN"). The UPIN and UGIN may be used to identify and track individual wands and play participants. The RFID transponder **118** also stores certain information identifying each play participant and/or describing certain powers or abilities possessed by an imaginary role-play character represented by the wand. These stored character attributes may be easily and conveniently transported with the wand to various compatible play facilities, games, video games, home game consoles, hand-held game units, and the like. If desired, the transponder **118** may be encapsulated in a colored epoxy, Lucite® acrylic glass (polymethyl methacrylate or PMMA) or the like and thereby disguised as a natural crystal or mineral/stone. A Level-2 wand preferably facilitates basic and intermediate game play within a compatible play facility. It has more functionality than a Level-1 wand, but is still not fully functional and, therefore, may not be capable of achieving some of the most desirable play effects or play experiences available.

The next level toy wand (Level-3) would preferably include, in addition, an active RF/IR module **150** and associated activation circuitry **120** for wirelessly casting a simple spell (for example, ON/OFF) over longer distances. Preferably, a Level-3 toy wand would be self-powered, requiring no batteries or other replaceable internal power source. However, if replaceable batteries are desired, they may optionally be encapsulated in a colored epoxy, Lucite® acrylic glass or the like and thereby disguised and sold in the form of a natural "energy crystal" or mineral/stone. A Level-3 toy wand preferably facilitates basic, intermediate and some advanced game play within a compatible play facility. It has more functionality than a Level-1 and Level-2 toy wand and can cast simple spells over long distances, but is not able to cast more complex spells. Therefore, it may not be capable of achieving some of the most advanced and desirable play effects or play experiences available.

The highest level toy wand (Level-4) would preferably include, in addition, circuitry and/or structure(s) (for example, auxiliary component **207**) for selecting and casting more advanced and/or complex spells (for example, ON/OFF, increase/decrease, UP/DOWN, change colors, simulated levitation, or the like). For example, this would be similar to the toy wand **100***g*, illustrated and described above in connection with FIGS. **6-8**. Preferably, a Level-4 toy wand would be self-powered, requiring no batteries or other replaceable internal power source. A Level-4 toy wand preferably facilitates basic, intermediate and all advanced game play within a compatible play facility. It has more functionality than a Level-1, Level-2 and Level-3 toy wand and can cast a variety of simple or complex spells over long distances to achieve the most advanced and spectacular magical play effects.

Preferably, in all cases described above, the wand shaft **110**, handle **115** and/or knob **123** may be further decorated and/or individualized, as desired, with various decorative elements **129**, monograms **131**, engravings, stickers, stains, custom paint and the like, to suit the tastes of each individual user. For example, various assembly and fabrication stations may preferably be provided within a dedicated "workshop" area whereby wand purchasers may personally attend to the selection, fabrication, assembly and final detailing of their personal toy wands. Similarly, toy wand "kits" may also be selected, packaged and sold whereby purchasers can assemble and decorate their own toy wands in the convenience of their own home using the wand components, materials and decorative elements illustrated and described above. FIGS. **11**A-**11**E illustrate various examples of toy wands that have been fabricated, assembled and detailed in a manner as described above.

In a further alternative embodiment, the RF/IR module **150** may be replaced (or complimented) with a laser or light emitting module for providing an alternative (or additional) mode of operation. This would have particular advantage where, for example, it is desired to provide directional control of a transmitted command signal such as may be useful for directional spell casting, target practice, or a shooting-gallery-style play effect.

FIG. **12** illustrates one possible embodiment of a light-activated interactive play system comprising a toy wand **100***h* configured with a light emitting module **215**, an image preparation device **220**, a display device **225**, a camera **230**, and a control system **235**. The light emitting module **215** preferably emits a directional signal, such as, for example, visible or infrared light. The signal may be triggered by particular motions of the toy wand **100***h*, as described herein, or by other input provided by the user. Those skilled in the art will appreciate that movements of the toy wand **100***h* will cause corresponding movements of the signal emitted by the light emitting module **215**, as illustrated in FIG. **12**. The camera **230** preferably captures, detects and/or records the position of the signal emitted by the light emitting module **215** and communicates the captured image data to the control system **235**. The control system **235** processes the image data by analyzing the position and/or movement of the light signal and then controls or triggers one or more effects based thereon.

For example, a user may move the toy wand **100***h* in a predetermined pattern to initiate a "magic spell." The movement of the wand **100***h* causes a corresponding movement of the signal emitted by the light emitting module **215**, which is captured by the camera **230**. The control system **235** then processes the image data received from the camera **230** to determine which "spell" was cast and to cause or trigger the special effect(s) associated with that particular spell. For example, the control system **235** may cause the image preparation device **220** to modify the displayed image so that flowers appear to "magically" sprout from a hat **202**. Another spell may cause an image of a wizard to magically appear within a crystal ball **203** (with optional sound and lighting effects), or a candle **206** to magically light.

In one embodiment the image preparation device **220** may comprise a video projector or an LCD projector, and the display device **225** may comprise a projection screen, a wall, or a translucent material upon which a projected image may be displayed. In another embodiment the image preparation device **220** may comprise a digital video source such as a memory, and the display device **225** may comprise a liquid crystal display (LCD) screen coupled to the digital video source. For example, the image preparation device **220** may be electrically coupled to the display device **225** through a wired or wireless transmission medium. In other embodiments, the image preparation device **220** may comprise multiple devices usable to project or to cause an image to appear on the display device **225**.

The image preparation device **220** is preferably configured to cause at least one video image and/or still image to

appear on the display device **225**. A skilled artisan will recognize from the disclosure herein that a wide variety of objects, characters, and/or images may be displayed on the display device **225**. For instance, these may include images of mythical creatures, such as a dragon or a unicorn; magical objects, such as a flying carpet; or fantasy characters, such as a wizard or an elf; and combinations of the same or the like.

In one embodiment the camera **230** may comprise a high-speed still camera or a specialized video camera. In one embodiment the camera **230** may be configured to record the signal emitted by the light emitting module **215** as it is intercepted or reflected by the display device **225**. In another embodiment the camera **230** may be located within a substantially enclosed area, such as, for example, a room, and configured to detect the signal emitted by the light emitting module **215** within the room and/or directed at objects or effects within the room. Optionally, multiple cameras **230** may be used to record or capture image data from different angles. Optionally, optical or infrared sensors may be used in place of, or in combination with, the camera **230** to detect the position and/or movement of the signal emitted by the light emitting module **215**.

In one embodiment, the control system **235** may comprise a general purpose or a special purpose processor. In other embodiments, the control system **235** may comprise an application-specific integrated circuit (ASIC) or one or more modules configured to execute on one or more processors. The control system **235** receives and processes the image data received from the camera **230** by analyzing the position and/or movement of the signal emitted by the light emitting module **215**. Based on this analysis the control system **235** determines modifications to be made to subsequent images prepared by the image preparation device **220**. Optionally, the control system **235** may communicate with a central system or database and/or other devices capable of causing play effects other than modifications to the image displayed on the display device **225**.

While an interactive gaming toy comprising a toy wand is specifically contemplated and described herein in detail, those skilled in the art will readily appreciate that the teachings herein are not limited to toy wands, but may be carried out using any number or variety of other objects and toys for which it may be desirable to imbue special "magic" powers or other functionalities described herein. For example, the activation circuit described above may be implemented in a variety of other gaming and entertainment applications such as, for example, a wireless or hard-wired input device for a video game, computer game or home game console, an arcade or redemption challenge device, home-operated amusement device using simple bells and buzzers, or the like. Alternatively, some or all of the various circuitry and components described herein above may be externally implemented such that an interactive gaming toy may not be entirely self-contained, but may rely on certain external components and circuitry for some or all of its functionality. Alternatively, some or all of the various circuitry and components described herein can be implemented in a user-wearable format such that various interactive play effects and the like, as described herein, may be actuated through particular hand or arm motions. Other suitable interactive gaming toys may include, for example and without limitation, sporting items such as paddles, nunchucks, simulated fishing rods, bats, and various sporting balls; household items such as candles, candle sticks, brooms, feather dusters, and paint brushes; writing implements such as pens, pencils, and crayons; musical instruments such as flutes, recorders, and drum sticks; educational items such as books and diaries; wearable items such as tassels, gloves, coats, hats, shoes and clothing items; role-play toys such as dolls, action figures, and stuffed animals; jewelry items such as rings, bracelets necklaces, and trinkets; natural items such as sticks, flowers, rocks, and crystals; and simulated food items such as apples, oranges, bananas, carrots, and celery.

Adjunct Gaming Items

If desired, one or more adjunct gaming items may also be provided and utilized as part of an interactive role-playing game such as disclosed herein. These may be used instead of or as an adjunct to other interactive gaming toys described herein. For example, FIGS. **13**A-**13**B illustrate one embodiment of an adjunct gaming item comprising an RFID-enabled character card. Each card **325***a* preferably comprises a paper, cardboard or plastic substrate having a front side **328** and a back side **330**. The front side **328** of each card **325***a* may be imprinted with graphics, photos, or any other information as desired. In the particular embodiment illustrated, the front side **328** contains an image of a particular character **345** from the Pajama Sam computer game series representing, for example, a role-play character desired to be imagined by a play participant. In addition, the front side **328** may include any number of other designs or information pertinent to its use and application in the game. For example, the character's powers, skills and experience level may be indicated, along with any other special powers or traits the character **345** may possess.

The back side **330** of the card preferably contains the card electronics comprising an RFID tag **128** pre-programmed with the pertinent information for the particular person, character or object portrayed on the front side **328** of the card. Preferably, the tag **128** is passive (requires no batteries) and has a read range greater than about 1 cm. RFID tags having read ranges of between about 10 cm to about 100 cm are particularly preferred, although shorter or longer read ranges will also work. The particular tag illustrated is a 13.56 MHz RFID tag inlay which has a useful read/write range of about 25 cm. It is sold under the brand name Tag-It™ and is available from Texas Instruments, Inc. (http://www.tiris.com, Product No. RI-103-110A). The tag **128** may be "read/write" or "read only", depending on its particular gaming application. Optionally, less expensive chipless tags (described in more detail later) may also be used. If desired, the tag **128** may be covered with an adhesive paper label **344** or, alternatively, the tag may be molded directly into a plastic sheet substrate from which the card is formed.

Those skilled in the art will readily appreciate from the disclosure herein that a variety of character cards and/or other gaming items having features and advantages as disclosed herein may be used to play a wide variety of unique and exciting games within an RFID-enabled play facility and/or using an RFID-enabled gaming device or game console. For example, such games may be carried out using a specially configured gaming device or, alternatively, using a conventional computer gaming platform, home game console, arcade game console, hand-held game device, internet gaming device or other gaming device that includes an RFID interface that is able to communicate with RFID tag **128**. Advantageously, play participants can use character cards **325***a* and/or other RFID-enabled gaming items to transport information pertinent to a particular depicted person, character or object to a favorite computer action game, adventure game, interactive play facility or the like. For example, as illustrated in FIG. **13**C, a suitably configured video game console and video game may be provided which

reads the card information and recreates the appearance and/or traits of the particular depicted person, character or object within the game (for example, the "Pajama Sam" character **345**).

If desired, the game console may be further configured to write information to the card in order to change or update certain characteristics or traits of the character, person or object depicted by the card **325***a* in accordance with a predetermined game play progression. For example, in the course of playing a typical Pajama Sam game, players must "find" certain objects or tools (for example, flash light **346**, lunch box **347** and PajamaMan mask **348**) that they will use to solve certain puzzles or tasks presented by the game. Players "pick up" these objects or tools by clicking their mouse on the desired object. The computer game software then keeps a record of which objects have been collected and displays those objects on the computer screen when requested by the player. This information can also advantageously be stored on the RFID tag **128** associated with the character card **325***a* so that in future game sessions the card information can be automatically read and the computer experience can be modified or updated in accordance with the new information recorded on the card **325***a*. In this manner, the character role-play experience becomes portable, personal and long-term. This, in turn, facilitates the development of even more sophisticated and complex role-play characters and longer, more enjoyable role play experiences as players are able to continue playing with and developing the same role-play character(s) over long periods of time and in different and varied play environments.

FIGS. **14**A-**14**B are front and back views, respectively, of an alternative embodiment of an adjunct gaming item comprising an RFID-enabled trading card **325***b*. The particular trading card illustrated is provided in the theme of the Pikachu character from the popular Pokemon® card game, video game and TV series. FIGS. **14**C-**14**D illustrate several other possible Pokemon® themed trading cards **325***c*, **325***d* comprising the characters Charizard (FIG. **14**C) and Cubone (FIG. **14**D). Cards **325***b*, **325***c*, **325***d* may be collected or traded and/or they may be used to play various games, such as a Pokemon® arena competition using an electronic interface capable of reading the card information.

Each trading card preferably comprises a paper, cardboard or plastic substrate having a front side **328** and a back side **330**. The front side **328** may be imprinted with graphics, photos, or any other information as desired. For example, the front side **328** of card **325***b* includes an image of the Pikachu character along with printed information **349** describing, for example, the character's type, size and evolution in the game, and any special powers or traits the character may possess. The back side **330** contains an RFID tag **128** configured and arranged in the manner described above in connection with FIGS. **13**A-**13**B.

RFID-enabled trading cards **325***b*, **325***c*, **325***d* and the virtual characters they represent, need not be static in the game, but may change over time according to a central story or tale that unfolds in real time (for example, through televised shows or movies released over the course of weeks, months or years). Thus, a trading card that may be desirable for game play this week (for example, for its special powers or abilities), may be less desirable next week if the underlying character is injured or captured in the most recent episode of the story. Another significant and surprising advantage of RFID-enabled trading cards is that multiple cards can be stacked and simultaneously read by a single RFID reader even where the cards are closely stacked on top of one another and even though the reader may be hidden from view. This feature and ability creates limitless additional opportunities for exciting game complexities, unique game designs and gaming strategies heretofore unknown.

Of course, those skilled in the art will readily appreciate from the disclosure herein that the underlying concept of an RFID-enabled character card or trading card is not limited to cards depicting fantasy characters or objects, but may be implemented in a wide variety of alternative embodiments, including conventional playing cards, poker cards, board game cards and tokens, sporting cards, educational cards and the like. If desired, any number of other suitable collectible/tradable tokens, coins, trinkets, simulated crystals or the like may also be provided and used with a similar RFID tag device for gaming or entertainment purposes in accordance with the teachings of the present invention.

For example, RFID tag devices may be included on "magic articles" that may be purchased or acquired in a gaming or interactive play system. For instance, a user may purchase an invisibility cloak, magic beads, belts, and the like during an interactive play experience. The RFID tags may be used to communicate to a central database that a certain player has purchased or is in possession of the tagged item. The central database may then track the tagged items and/or may cause those in possession of the tagged items to have increased "magical" skills or powers, such as additional protection from the spells "cast" by opposing players.

Toy/Game Interface

Those skilled in the art will appreciate that the various interactive gaming toys and gaming items described herein may be used with a specially configured computer, video game, home game console, hand-held gaming device, game controller or similar gaming device having a compatible wireless interface configured to communicate with each interactive gaming toy or gaming item in the manner disclosed herein. Alternatively, a conventional gaming device may be used in conjunction with a peripheral device that provides the compatible wireless interface. For example, this may comprise an RFID reader or an RFID reader/writer device such as described herein.

One embodiment of a peripheral gaming device in accordance with the present invention is illustrated in FIG. **15**A. The peripheral gaming device **301***a* basically comprises a themed toy having an integrated RFID reader/writer **300** configured to communicate with one or more RFID-tagged toys or gaming items in a manner disclosed herein. If desired, the peripheral gaming device **301***a* may be configured in accordance with any desired theme, such as may be consistent with a game played using one or more associated gaming toys or gaming items, or may be configured in a generic style. In the particular example illustrated, the peripheral gaming device **301***a* takes on the form of a magical portal **303** guarded by a pair of fearsome dragons **307***a*, **307***b*. The dragons **307***a*, **307***b* and magical portal **303** are preferably integrally molded and configured such that the portal **303** is supported in a substantially vertical upright position when the peripheral gaming device **301***a* is placed on a flat support surface (for example, a table or floor surface). The portal **303** defines an opening **309** that is preferably sized and configured to allow one or more RFID-tagged interactive gaming toys or gaming items to enter and pass through. An RF antenna **306**, which is electrically coupled to RFID reader/writer **300**, is preferably hidden within the portal **303** and substantially surrounds the opening **309**, as illustrated.

Those skilled in the art will appreciate that as an RFID-tagged gaming toy or gaming item enters and passes through the opening **309** it may be wirelessly powered by an elec-

tromagnetic field generated by the antenna **306**, such as disclosed and described herein in connection with FIG. **8**A. The antenna **306** and RFID reader/writer **300** may also provide a wireless communication interface for communicating with the RFID-tagged gaming toys and gaming items as they enter and pass through the opening **309**. RFID reader/writer **300** may also be configured to communicate with a host computer **375** (for example, a home computer, home game console, hand-held game unit) using, for example, one or more industry standard communication interfaces such as RS232, Ethernet, or a wireless network.

If desired, the peripheral gaming device **301***a* may also include the ability to produce light, vibration or sound effects to complement the operation of an associated interactive gaming toy. For example, these effects may be triggered based on information wirelessly communicated by an RFID-tagged gaming toy to the RFID reader/writer **300**. Optionally, the opening **309** may open into an enclosed space, such as a simulated vault, cave or secret chamber. For example, the enclosed space may be configured to accommodate one or more interactive gaming toys. In one embodiment, the portal opening **309** is configured such that gaming toys can only enter or exit an enclosed space by passing through the portal **303**. In this manner, one or more associated interactive gaming toys may be wirelessly tracked as they enter or exit an enclosed space through opening **309**.

FIG. **15**B illustrates an alternative embodiment of a peripheral gaming device **301***b* having an integrated RFID reader/writer **300** configured to communicate with one or more RFID-tagged toys or gaming items in a manner disclosed herein. In the particular example illustrated, the peripheral gaming device **301***b* takes on the form of a magician's hat. The brim of the hat defines an opening **309** that is preferably sized and configured to allow one or more RFID-tagged interactive gaming toys or gaming items to enter and pass through. An RF antenna **306**, which is electrically coupled to RFID reader/writer **300**, is preferably hidden within the brim of the hat and substantially surrounds the opening **309**, as illustrated. The opening **309** preferably lies in a horizontal plane, as illustrated, and opens into a substantially enclosed space below the brim comprising, for example, the crown of the hat. This space is preferably sized and configured to accommodate one or more RFID-tagged interactive gaming toys or gaming items such as disclosed and described herein. In one embodiment, the peripheral gaming device **301***b* is configured such that gaming toys can only enter or exit the enclosed space by passing through the opening **309**. In this manner one or more associated interactive gaming toys may be wirelessly tracked as they enter or exit the enclosed space through opening **309**. If desired, a false bottom and/or one or more hidden compartments (not shown) may be provided within the enclosed space and configured to selectively conceal one or more gaming items.

Those skilled in the art will appreciate that as an RFID-tagged gaming toy or gaming item approaches the opening **309** (either from above or below) it may be wirelessly powered by an electromagnetic field generated by the antenna **306**, such as disclosed and described herein in connection with FIG. **8**A. The antenna **306** and RFID reader/writer **300** also provides short-range two-way wireless communications with each RFID-tagged gaming toy over a limited wireless communication range preferably greater than about 1 cm and less than about 60 cm. This communication range preferably extends both above and below antenna **306** such that the peripheral gaming device **301***b* is able to wirelessly power and communicate with RFID-tagged items as they approach, enter and pass through the opening **309**. If desired, this communication range may be the same as, greater than, or less than, the distance from antenna **306** to a lower support surface **311** upon which RFID-tagged items (for example, a toy rabbit or a gnome doll) may be placed. For example, the limited communication range may be sufficient or insufficient to wirelessly power and communicate with the RFID-tagged items placed on the lower support surface **311**. If desired, one or more auxiliary antennae (not shown) may be provided and electrically coupled to RFID reader/writer **300** in order to extend the communication range of the RFID reader/writer **300** and/or to provide additional electromagnetic field energy for wirelessly powering RFID-tagged gaming items. For example, a second antenna (not shown) may be provided within the lower support surface **311**.

RFID reader/writer **300** is also preferably configured to communicate with a host computer **375** (for example, a home computer, home game console, hand-held game unit) using, for example, one or more industry standard communication interfaces such as RS232, Ethernet, or a wireless network. If desired, the peripheral gaming device **301***b* may also include the ability to produce light, vibration or sound effects to complement the operation of an associated interactive gaming toy. For example, various effects may be triggered when an RFID-enabled toy wand is brought within wireless communication range of the peripheral gaming device **301***b*.

FIG. **15**C illustrates a further alternative embodiment of a peripheral gaming device **301***c* having an integrated RFID reader/writer **300** configured to communicate with one or more RFID-tagged toys or gaming items in a manner disclosed herein. In the particular example illustrated, the peripheral gaming device **301***c* takes on the form of a witch's cauldron. The rim of the cauldron defines an opening **309** that is preferably sized and configured to allow one or more RFID-tagged gaming items (for example, a spider, a batwing, and a vial of potion) to enter and pass through. An RF antenna **306**, which is electrically coupled to RFID reader/writer **300**, is preferably hidden within the rim of the cauldron and substantially surrounds the opening **309**, as illustrated.

The opening **309** preferably lies in a horizontal plane, as illustrated, and opens into a substantially enclosed space below the rim comprising the belly of the cauldron. This space is preferably sized and configured to accommodate one or more RFID-tagged interactive gaming toys or gaming items such as disclosed and described herein. Those skilled in the art will appreciate that as an RFID-tagged gaming toy or gaming item approaches the opening **309** (either from above or below) it may be wirelessly powered by an electromagnetic field generated by the antenna **306**, such as disclosed and described herein in connection with FIG. **8**A. The antenna **306** and RFID reader/writer **300** also provides short-range two-way wireless communications with each RFID-tagged gaming toy over a limited wireless communication range preferably greater than about 1 cm and less than about 60 cm. The communication range preferably extends both above and below antenna **306** such that the peripheral gaming device **301***c* is able to wirelessly power and communicate with RFID-tagged items as they approach, enter and pass through the opening **309**. Optionally, the communication range is sufficient to wirelessly power and communicate with multiple gaming toys or gaming items that may be placed in the belly of the cauldron as part of an interactive game.

RFID reader/writer **300** is also preferably configured to communicate with a host computer **375** (for example, a

home computer, home game console, hand-held game unit) using, for example, one or more industry standard communication interfaces such as RS232, Ethernet, or a wireless network. If desired, the peripheral gaming device **301***c* may also include the ability to produce light, vibration or sound effects to complement the operation of an associated interactive gaming toy or computer-animated game. For example, various special effects (for example, boiling, sparking, gurgling, shaking, or popping), may be triggered as each RFID-tagged gaming item is dropped into the cauldron. These effects may be different for each RFID-tagged item (or combination of items) based on information wirelessly communicated by each RFID-tagged item to the RFID reader/writer **300**.

In addition to the embodiments described above and illustrated in FIGS. **15**A, **15**B, and **15**C, in some embodiments an antenna **306** may be configured into a variety of shapes and sizes to fit any desired theme. For example, in some embodiments, the antenna **306** may substantially surround an opening shaped like a knot on a real or artificial tree or an opening on a house, such as a window or a door. In some embodiments an antenna **306** as described above may be configured to substantially surround an opening in a desk drawer, a shelf, a cup, a mug, a door to a room, or any other opening **309**. In some embodiments, the antenna **306** may substantially surround a portion of a tunnel, such that RFID reader/writer **300** may provide a wireless communication interface for communicating with the RFID-tagged gaming toys and gaming items as they enter and pass through the tunnel. In some embodiments, a tunnel may have multiple antennae **306**, which enable one or more RFID reader/writers **300** to track the progress of RFID-tagged gaming toys and gaming items as they enter and pass through the tunnel.

RFID Tags and Readers

Many of the preferred embodiments of the invention illustrated and described herein are RFID-enabled—that is, they utilize RFID technology to electrically store and communicate certain relevant information (for example, UPIN and UGIN, game levels, points, combinations of the same or the like) and/or to wirelessly actuate or control various play effects. RFID technology provides a universal and wireless medium for uniquely identifying objects and/or people and for wirelessly exchanging information over short and medium range distances (10 cm to 10 meters). Commercially available RFID technologies include electronic devices called transponders or tags, and reader/writer electronics that provide an interface for communicating with the tags. Most RFID systems communicate via radio signals that carry data either uni-directionally (read only) or, more preferably, bi-directionally (read/write).

Several examples of RFID tags or transponders particularly suitable for use with the present invention have been illustrated and described herein. For example, in some of the embodiments illustrated and described above, a 134.2 kHz/123.2 kHz, 23 mm glass transponder **118** is selected, such as available from Texas Instruments, Inc. (http://www.tiris.com, for example, Product No. RI-TRP-WRHP). As illustrated in more detail in FIG. **16**A, this transponder basically comprises a passive (batteryless) RF transmitter/receiver chip **240** and an antenna **245** provided within an hermetically sealed vial **243**. If desired, the RFID transponder **118** may include an optional external interrupt/disable line **260**, such as illustrated in FIG. **16**A.

FIG. **16**B is a simplified schematic diagram of one embodiment of an RFID reader/writer **300** for use with the RFID transponder **118** of FIG. **16**A. A preferred reader/writer device is the Series 2000 Micro Reader available from Texas Instruments, Inc. (http://www.tiris.com, for example, Product No. RI-STU-MRD1). As illustrated, the reader/writer **300** basically comprises an RF Module **302**, a Control Unit **304** and an antenna **306**. When the transponder **118** comes within a predetermined range of antenna **306** (about 20-200 cm) the transponder antenna **245** (FIG. **16**A) is excited by the radiated RF fields **308** and momentarily creates a corresponding voltage signal which powers RF transmitter/receiver chip **240**. In turn, the RF transmitter/receiver chip **240** outputs an electrical signal response which causes transponder antenna **245** to broadcast certain information stored within the transponder **118** comprising, for example, 80 to 1000 bits of information stored in its internal memory. This information preferably includes a unique identifier such as a user ID (for example, UPIN/UGIN) and/or certain other items of information pertinent to the user, the associated toy or gaming item, and/or the game or play experience.

A carrier signal embodying this information is received by antenna **306** of RFID reader/writer **300**. RF Module **302** decodes the received signal and provides the decoded information to Control Unit **304**. Control Unit **304** processes the information and provides it to an associated logic controller, PID controller, computer or the like using a variety of standard electrical interfaces (not shown). Thus, the information transmitted by transponder **118** and received by reader/writer **300** may be used to control one or more associated play effects through a programmable logic controller, for example. In one embodiment, for example, the information transmitted includes data relating to the activation of the sensors **122**, **124** of the toy wand **100***g* (FIG. **8**A). In other embodiments, the transmitted information may include timing information, such as the duration of time that a sensor is activated and/or the duration of time between successive activations of the sensors **122**, **124**. Play effects, may include, for example, lighting effects, sound effects, various mechanical or pneumatic actuators and the like.

Preferably, RFID reader/writer **300** is also configured to broadcast or "write" certain information back to the transponder **118** to change or update information stored in its internal memory, for example. The exchange of communications occurs very rapidly (about 70 ms) and so, from the user's perspective, it appears to be virtually instantaneous. Thus, the transponder **118** may be used to wirelessly actuate and/or communicate with various associated effects by simply touching or bringing the transponder **118** into relatively close proximity (for example, 2-3 cm) with the antenna **306** of a reader/writer unit **300**.

FIG. **16**C is a simplified circuit schematic of the reader/writer unit **300** of FIG. **16**B. The read or write cycle begins with a charge (or powering phase) lasting typically 15-50 ms. During this phase, the RF Module **302** causes the antenna **306** to emit an electromagnetic field at a frequency of about 134.2 kHz. The antenna circuit is mainly formed by the resonance capacitor C**1** and the antenna coil **306**. A counterpart resonant circuit of the transponder **118** is thereby energized and the induced voltage is rectified by the integrated circuit **240** and stored temporarily using a small internal capacitor (not shown).

The charge phase is followed directly by the read phase (read mode). Thus, when the transponder **118** detects the end of the charge burst, it begins transmitting its data using Frequency Shift Keying (FSK) and utilizing the energy stored in the capacitor. The typical data low bit frequency is 134.2 kHz and the typical data high bit frequency is 123.2 kHz. The low and high bits have different duration, because

each bit takes 16 RF cycles to transmit. The high bit has a typical duration of 130 μs, the low bit of 119 μs. Regardless of the number of low and high bits, the transponder response duration is generally less than about 20 ms.

The carrier signal embodying the transmitted information is received by antenna **306** and is decoded by RF module **302**. RF Module **302** comprises integrated circuitry **312** that provides the interface between the transponder **118** and the Control Module **304** (data processing unit) of the Reader/Writer Unit **300**. It has the primary function and capability to charge up the transponder **118**, to receive the transponder response signal and to demodulate it for further digital data processing. A Control Unit **304**, comprising microprocessor **314**, power supply **316** and RS232 Driver **318**, handles most data protocol items and the detailed fast timing functions of the Reader/Writer Module **300**. It may also operate as an interface for a PC, logic controller or PLC controller for handling display and command input/output functions, for example, for operating/actuating various associated play effects. If desired, the Reader/Writer Module **300** may also be configured to communicate with an optional Host Computer **375** through one or more standard communication interfaces, such as RS232, RS422 or RS485.

In other embodiments illustrated and described above, an adhesive-backed RFID tag inlay is utilized, such as the 13.56 MHz tag sold under the brand name Tag-It™ available from Texas Instruments, Inc. (http://www.tiris.com, Product No. RI-103-110A). These tags have a useful read/write range of about 25 cm and contain 256 bits of on-board memory arranged in 8×32-bit blocks which may be programmed (written) and read by a suitably configured read/write device. The Tag-It™ 13.56 MHz RFID tag has particular advantages in the context of the present invention. Paper thin and batteryless, this general purpose read/write transponder is placed on a polymer tape substrate and delivered in reels. It fits between layers of laminated paper or plastic to create inexpensive stickers, labels, tickets and badges that may be easily secured or applied to virtually any play object, toy wand, wristband, badge, card or the like, for electronically storing and retrieving desired user-specific or object-specific information. Such information may include, for example, UPIN, UGIN, object type/size/shape/color, first and/or last name, age, rank or level, total points accumulated, tasks completed, facilities visited, and combinations of the same or the like. These or similar RFID tags may be applied to any of the interactive gaming toys disclosed and described herein or to any other toys, play objects, jewelry, trinkets, action figures, collectibles, trading cards and generally any other items desired to be incorporated as part of an RFID-enabled gaming experience.

As illustrated in more detail in FIG. **17**A, RFID tag **128** generally comprises a spiral wound antenna **338**, a radio frequency transmitter chip **340** and various electrical leads and terminals **342** connecting the chip **340** to the antenna **338**. The tag **128** is configured to be initially activated by a radio frequency signal broadcast by an antenna **306** of an adjacent reader or activation device **300** (See FIGS. **17**B, **17**C). The signal impresses a voltage upon the tag antenna **338** by inductive coupling which is then used to power the chip **340**. When activated, the chip **340** transmits via radio frequency a unique identification number preferably corresponding to the UPIN and/or UGIN described above. The signal may be transmitted either by inductive coupling or, more preferably, by propagation coupling over a distance "d" determined by the range of the tag/reader combination (See FIG. **17**C). This signal is then received and processed by the associated reader **300** as described above. If desired, the RFID tag **128** may also be configured for read/write communications with an associated reader/writer. Thus, the UPIN or UGIN can be changed or other information may be added.

As indicated above, communication of data between a tag and a reader is by wireless communication. As a result, transmitting such data is always subject to the vagaries and influences of the media or channels through which the data has to pass, including the air interface. Noise, interference and distortion are the primary sources of data corruption that may arise. Thus, those skilled in the art will recognize that a certain degree of care should be taken in the placement and orientation of readers **300** so as to minimize the probability of such data transmission errors. Preferably, the readers are placed at least 30-60 cm away from any metal objects, power lines or other potential interference sources. Those skilled in the art will also recognize that the write range of the tag/reader combination is typically somewhat less (~10-15% less) than the read range "d" and, thus, this should also be taken into account in determining optimal placement and positioning of each reader device **300**. Preferably a tag/reader combination is selected having a read/write range greater than about 1 cm. If a longer read/write range and/or more memory is desired, optional battery-powered tags may be used instead, such as available from Axcess, Inc. and/or various other vendors known to those skilled in the art.

FIG. **17**D is a simplified block diagram illustrating the basic organization and function of the electronic circuitry comprising the radio frequency transmitter chip **340** of the RFID tag device **128** of FIG. **17**A. The chip **340** basically comprises a central processor **530**, Analogue Circuitry **535**, Digital Circuitry **540** and on-board memory **545**. On-board memory **545** is divided into read-only memory (ROM) **550**, random access memory (RAM) **555** and non-volatile programmable memory **560**, which is available for data storage. The ROM-based memory **550** is used to accommodate security data and the tag operating system instructions which, in conjunction with the processor **530** and processing logic deals with the internal "house-keeping" functions such as response delay timing, data flow control and power supply switching. The RAM-based memory **555** is used to facilitate temporary data storage during transponder interrogation and response. The non-volatile programmable memory **560** may take various forms, electrically erasable programmable read only memory (EEPROM) being typical. It is used to store the transponder data and is preferably non-volatile to ensure that the data is retained when the device is in its quiescent or power-saving "sleep" state.

Various data buffers or further memory components (not shown), may be provided to temporarily hold incoming data following demodulation and outgoing data for modulation and interface with the transponder antenna **338**. Analog Circuitry **535** provides the facility to direct and accommodate the interrogation field energy for powering purposes in passive transponders and triggering of the transponder response. Analog Circuitry **535** also provides the facility to accept the programming or "write" data modulated signal and to perform the necessary demodulation and data transfer processes. Digital Circuitry **540** provides certain control logic, security logic and internal microprocessor logic required to operate central processor **530**.

Of course, those skilled in the art will readily appreciate from the disclosure herein that the invention is not limited to the specific RFID transponder devices disclosed herein, but may be implemented using any one or more of a wide variety of commercially available wireless communication devices such as are known or will be obvious from the

disclosure herein to those skilled in the art. These include, without limitation, RFID tags, EAS tags, electronic surveillance transmitters, electronic tracking beacons, Wi-Fi, GPS, bar coding, and the like.

Another RFID tagging technology of particular interest for purposes of practicing the present invention are the so-called "chipless" RFID tags. These are extremely low-cost RFID tags that are available in the form of a printed circuit on a thin, flat adhesive-backed substrate or foil. These tags are similar in size, shape and performance to the Tag-It™ RFID inlay tags described above, except that these tags require no on-board integrated circuit chip. Chipless RFID tags can be electronically interrogated to reveal a pre-encoded unique ID and/or other data stored on the tag. Because the tags do not contain a microchip, they cost much less than conventional RFID tags. An adhesive-backed chipless RFID tag with up to 10 meters range and 256 bits of data, can cost one tenth of their silicon chip equivalents and typically have a greater physical performance and durability. For example, a suitable chipless RFID tag is being made available from Checkpoint Systems under its ExpressTrak™ brand. Very inexpensive chipless RFID tags (and/or other types of RFID tags) may also be directly printed on paper or foil substrates using various conductive inks and the like, such as are available from Parelec Inc. under its Parmod VLT™ brand.

Wireless Receivers/Transmitters

In many of the preferred embodiments of the invention illustrated and described herein it is disclosed to use a radio frequency (RF) and/or infrared (IR) transmitter to send wireless signals over relatively long range distances (for example, 10-100 meters or more). For example, the toy wand **100***g* illustrated and described in connection with FIG. **8**A includes an internal RF/IR Module **150** for communicating various command signals to one or more remote RF/IR receivers and associated effects. RF/IR Module **150** can comprise any number of small, inexpensive RF transmitters such as are commercially available from Axcess, Inc., of Dallas, Tex. If directionality is desired, any number of small, inexpensive infrared (IR) LED transmitters may be used, such as the type commonly employed in television remote controls, keyless entry systems and the like.

FIG. **18**A is a schematic block diagram of one embodiment of a transmitter module **150** adapted for use in accordance with the present invention. The transmitter module **150** generally comprises an RF or IR transmitter **358** driven and controlled by a microprocessor or ASIC **350**. ASIC **350** includes address storage module **352**, data storage module **354** and shift register **356**. Address storage module **352** includes a stored address or coded value, for example, in parallel bit format, that is a preselected coded value that may be uniquely associated with a particular transmitter module **150**. Address storage module **352** applies the address coded value to an encoder, such as shift register **356** which, when enabled, encodes the coded value by converting it from parallel bit format to serial bit format which is applied to RF/IR transmitter **358**. Similarly, data storage module **354** may include coded data or commands provided by a user (for example, via any of the various command input circuits and structures described above in connection with FIGS. **8**A-**8**B). Data storage module **354** applies the coded data values to shift register **356** which, when enabled, encodes the coded data by converting it from parallel bit format to serial bit format which is also applied to RF/IR transmitter **358**. Transmitter **358** modulates the coded address and data values and encodes it in serial bit format onto either a radio frequency or infrared carrier signal which is transmitted as an output signal (RF/IR_{Out}). The output signal may be transmitted, for example, via a simple loop antenna (for RF signals) or an infrared LED (for IR signals). If desired, application of electrical power from an internal battery source **152** (or other power sources described herein) may be controlled via activation circuitry **120** such as illustrated and described above in connection with FIGS. **5** and **8**A-**8**B.

Those skilled in the art will recognize from the disclosure herein that transmitter module **150** may be implemented in a variety of known electrical technologies, such as discrete electronic circuits and/or integrated circuits Preferably, integrated circuitry technology and/or surface mount components are used to reduce the physical size of the circuit **150** such that it is able to fit within a relatively small space such as an internal cavity of an interactive gaming toy.

FIG. **18**B is a schematic block diagram of one embodiment of a receiver module **362** which is configured to operate in conjunction with transmitter module **150** previously described. Radio frequency or infrared command signals transmitted by transmitter module **150** are provided as input signals (RF/IR_{In}) to RF/IR receiver **363**. RF/IR receiver **363** may comprise, for example, a simple tuned circuit with loop antenna (for receiving RF signals) or one or more infrared sensors (for receiving IR signals). Command signals received by RF/IR receiver **363** are applied to a decoder, such as shift register **364** which converts the coded value therein from a serial bit format to a parallel bit format. Address comparator **366** receives at one input the transmitter module coded address value in parallel bit format from shift register **364** and at its other input a preselected fixed or dynamically stored coded value from address storage **368**. The preselected coded value from address storage **368** corresponds to the preselected coded value of the transmitter module **150** with which receiver module **362** is associated or compatible. In other words, the preselected coded value stored in transmitter address storage **352** of transmitter module **150** is the same as or compatible with a preselected coded value as is stored in address storage **368** of receiver module **362** with which it is associated or compatible. If the coded address value in the received command signal matches all or a predetermined portion of the preselected fixed or dynamic coded value stored in address storage **368**, this coincidence is detected by address comparator **366** and is applied to restart or reset receive timer **372**. Receive timer **372** preferably has a time-out period of, for example, 0.5-3 seconds and, if it is not restarted or reset within this time period, it produces a command termination signal which tells an associated controller **374** to process the received command signals(s) and to actuate one or more corresponding play effects such as lighting effects **376**, sound effects **377** and various actuator-driven effects, such as opening of a treasure chest **378**. Each of the functional elements of receiver module **362** and controller **374** receive electrical power from a suitable power source **380**, as illustrated.

In operation, the RF/IR transmitter module **150** transmits a certain command signal (RF/IR_{Out}) including coded address and optional coded data information. This signal is received and decoded by receiver module **362** as input signal (RF/IR_{in}). The decoded transmitter address information is compared to a fixed or dynamically stored coded value from address storage **368**. Preferably, an immediate effect such as a pulsing light or sound is actuated by controller **374** in order to provide visual and/or aural cues that a command signal was received. Receive timer **372** is initiated and the RF receiver module **362** awaits the next command signal. If no further signal is received before the timer **372** times out, then

the command signal is assumed to be complete and the controller **374** is instructed to process the received command signal(s) and actuate one or more relays, for example, thereby triggering whatever appropriate effect(s) correspond to the command signal received.

For applications supporting multiple wireless input devices (i.e., multiple RF/IR transmitter modules **150**) within a single play space, the address comparator **366** of receiver module **362** is preferably configured to accept either: (1) a range of valid "compatible" addresses from the set of RF/IR transmitter modules **150**; or (2) any valid address from a list of valid addresses stored in address storage module **368**. In the first case, each transmitter module **150** within a defined group of transmitter modules (for example, all Level-1 toy wands) would preferably be configured to have a coded address value having a portion of address bits that are identical and a portion of address bits that may be unique. The receiver module **362**, upon detecting a compatible address bit sequence, decodes the data bits thereof and sets a latch selected by those particular data bits. A number of such latches, may be provided, for example, for recognizing and distinguishing further such command signals originating from multiple users and/or wands. In the second case, the receiver module **362** stores a list of specific coded values, i.e. valid addresses, in a memory, such as memory **368**, and as transmitted addresses are received, they are compared to the valid addresses in this list. Thus, only signals transmitted by RF/IR transmitter modules that are on the list of valid addresses are accepted by receiver module **362**. In this manner, for example, command signals sent by Level-1 toy wands can be distinguished from command signals sent by Level-2 toy wands.

FIG. **18**C is a schematic block diagram of a portion of a receiver module **362** including an embodiment of address comparator **366** and of address storage **368** particularly suited for operating with a plurality of simultaneously operating transmitter modules **150**. For purposes of illustration, blocks in FIG. **18**C that are the same as blocks in FIG. **18**B described above are shown in phantom and are identified by the same numeric designation. Address storage **368** includes addressable registers or memory **386** in which are stored the preselected coded identification values corresponding to the preselected coded identification value of each of a plurality of compatible transmitter modules **150** desired to be operably associated with receiver **362**. Address selector **388** repetitively generates a sequence of addresses including the addresses of all the registers of addressable register **386** within a relatively short time period less than about 50-100 milliseconds. Thus the complete set of preselected stored coded values are applied to one input of coded value comparator **390**. The received coded identification value received and decoded at the output of shift register **364** is applied to the other input of coded value comparator **390**, whereby the received coded identification value is compared to each one of the coded values stored in addressable register **386**.

Address comparator **366** preferably includes a latch circuit **392** having an addressable latch corresponding to each register in addressable register **386** and that is addressed by the same address value generated by address selector **388** to address register **386**. Coded value comparator **390** determines when there is a match between the received coded value and the stored coded value. The occurrence of a match causes comparator **390** to set the corresponding latch in latch circuit **392**. If received coded identification values corresponding to all of the stored fixed coded values are received and properly decoded, then all of the latches in latch circuit **392** will be set, thereby making a "true" condition at the inputs of AND gate **394** and causing its output to become "true." This "true" signal from AND gate **394** resets receive timer **372**, as described above in connection with FIG. **18**B, and also activates a reset circuit **396** to reset all the latches of latch circuit **392** so that the comparison sequence of received coded identification values to the set of stored fixed coded values begins again. If all of the preselected received coded values are not received, then all of the latches in latch circuit **392** are not set, the output of AND gate **394** does not become "true", and receive timer **372** times out and issues the command termination signal discussed above. Although the receiver module **362** of FIG. **18**C is disclosed with reference to particular embodiments, a skilled artisan will recognize from the disclosure herein that a wide variety of alternative structures may be used.

FIG. **19** is a detailed electrical schematic diagram of an exemplary embodiment of transmitter module **150** illustrated and discussed above. Electrical power is provided by one or more batteries **152** and/or other power sources as illustrated and described herein. This power is preferably switched by activation circuit **120** and/or optional timer module **402**. Electrical power is provided via diode D**2** to the transmit timer U**1**, such as an integrated circuit one-shot multivibrator type LM555 available from National Semiconductor Corporation. The time-out interval of multivibrator U**1** is established by resistors R**2**, R**3** and capacitor C**1** which need not be high precision components. When activation circuit **120** is activated, a voltage is applied through resister R**1** to the gate of a transistor Q**1**. This causes electrical power to be applied from battery **152** to a five-volt voltage regulator U**4** such as a type LM78L05 also available from National Semiconductor Corporation. Alternatively, the periodic output from U**1** may be applied to the gate of a transistor Q**1** to the same effect (for example, for sending periodic "beacon" transmissions).

Regulated voltage from regulator U**4** is applied to shift register **356** (pin **18**) and RF transmitter **358**. Shift register **356** is implemented by an encoder integrated circuit U**2** such as a **212** series encoder type HT12E available from Holtek Microelectronics in Hsinchu, Taiwan, R.O.C. Non-volatile address storage **352** is implemented by twelve single pole switches in switch packages SW**1** and SW**2** which are set to produce a twelve-bit coded value which is applied in parallel bit format to encoder integrated circuit U**2** of shift register **356**. Once set by the manufacturer or the user, the preselected coded value stored in address storage **352** is fixed and will not change absent human intervention. However, in alternative embodiments SW**2** may be replaced in whole or in part by command selection circuitry such as touch switches, tilt switches and the like illustrated and described above in connection with FIG. **8**A. Such circuitry enables users to actively select and change the coded data impressed upon address lines **8**-**10** of encoder integrated circuit U**2**. Integrated circuit U**2** reproduces the coded address and data values in pulse-width modulated serial-bit format and applies it through diode D**1** to RF transmitter **358** (which, in alternative embodiments, may comprise an IR transmitter). RF transmitter **358** includes a class B biased transistor Q**2** in an L-C tuned RF oscillator transmitter coupled to a loop antenna **406** for transmitting the command signal coded values (address bits coded by SW**1** and data bits coded by SW**2**) produced by encoder U**2**.

Transmitter module **150** need only employ a small antenna such as a small loop antenna and is not required to have optimum antenna coupling. In a typical embodiment, with a transmitter frequency of about 915 MHz, a transmitter

peak power output of less than or equal to one milliwatt produces a transmission range R of about 20-30 meters. Other frequencies and power levels may also be employed. The low transmitter power is particularly advantageous in that it allows the size of transmitter module **150** to be made very small.

FIG. **20** is an electrical schematic diagram of an exemplary embodiment of receiver module **362** illustrated and discussed above. Power is supplied by a voltage source **410** which can be either a battery or a DC power supply. Voltage from voltage source **410** is regulated by voltage regulator circuit U**3** such as type LM78L05 to produce a regulated +5 volt power supply for the functional blocks of receiver module **362**. In operation, command signals transmitted from transmitter modules are received at loop antenna **412** and applied to RF receiver **363** (which, in alternative embodiments, may comprise an IR receiver) including a receiver sub-circuit integrated circuit U**8** such as type RX-2010 available from RF Monolithics in Dallas, Tex. The identification signal, including the twelve bit coded value in serial-bit format is coupled from the output of receiver sub-circuit U**8** to shift register decoder and address comparator **364**/**366** which are implemented in an integrated circuit U**5**, such as a **212** series decoder type HT12D also available from Holtek Microelectronics. Decoder U**5** converts the coded value in serial-bit format to parallel-bit format and compares that received coded value to the preselected stored coded fixed reference value in parallel bit format determined, for example, by the positions of the twelve single pole switches in switch packages SW**3**, SW**4** of address storage module **368**.

Receive timer **372** is implemented by one-shot timer integrated circuit U**6***a* such as type 74123N and D-flip flop U**7***a* such as type 74HC74D, both of which are available from National Semiconductor Corporation of Santa Clara, Calif. When comparator **366** detects a match between the received coded value from transmitter module **150** and the coded value stored in address storage **368** it resets one-shot timer U**6***a*. If one-shot timer U**6***a* is not again reset within the time determined by timing resistor R**8** and timing capacitor C**9**, U**6***a* then sets flip-flop U**7***a* and its Q output becomes low thereby applying a voltage input to controller **374** signifying the end of a transmitted command signal. Controller **374** then processes the received command signal or signals (for example, stored in a stack register) and appropriately operates one or more associated play effects **376**.

Those skilled in the art will appreciate that the switch positions of the twelve switches SW**1**, SW**2** of transmitter module **150** correspond to the switch positions of the corresponding twelve switches SW**3**, SW**4** of receiver module **362**. These preset values may be fixed or dynamic, as discussed above. The twelve-bits available for storing coded values may be apportioned in a convenient way, for example, into an address portion and into a data portion. For example, the twelve-bit coded value can be apportioned into a ten-bit address portion (1024 possible combinations) and a two-bit data portion, which would accommodate up to four different transmitter command signals. If desired, the ten-bit address portion can be further divided into various logical portions representing, for example, designated wand levels (for example, 1, 2, 3 or 4), special acquired magic powers or skills, experience levels and the like. This coded data would preferably be shared and coordinated between all transmitter modules **150** and receiver modules **362** such that each associated gaming toy effectively would have its own unique powers and abilities as represented and identified by the coded address data. Thus, certain receivers and associated play effects would not respond to certain transmitter modules unless the address coding of the transmitter module is coded with the appropriate matching data. Persons skilled in the art will recognize also that recoding of transmitter modules is a convenient way to provide for advancement of game participants within an interactive gaming experience. For example, this can be accomplished manually (for example, by flipping dip switches SW**1**/SW**2**) or automatically/wirelessly (for example, via RF programmable code latching circuitry, not shown).

While the foregoing embodiments have been described in terms of a radio frequency (RF) or infrared (IR) transmission between a transmitter module **150** and receiver module **362**, various alternative embodiments could also readily be implemented such as, for example, complimenting an RF transmitter and receiver set with an appropriately selected infrared (IR) transmitter and receiver set or a laser or light system. The IR or laser system would have particular advantage where, for example, it is desired to provide directional control of a transmitted command signal.

RF Transceivers (SRRF)

In certain embodiments, an interactive gaming toy may include an RF transceiver (a combination radio transmitter and receiver) configured to electronically send and receive information to and from various other compatible RF transceivers that may be provided within a play environment. The capability to provide two-way wireless communications (sometimes referred to herein as a send receive radio frequency communication protocol or "SRRF") provide the basic foundation for a complex, interactive entertainment system. In its most refined embodiments, a user may electronically send and receive information to and from other SRRF-compatible interactive gaming toys and/or to and from a SRRF-compatible master control system (described in more detail later) located within and/or associated with any of a number of play environments

SRRF may generally be described as an RF-based communications technology and protocol that allows pertinent information and messages to be sent and received to and from two or more SRRF-compatible devices or systems. While the specific embodiments described herein are specific to RF-based communication systems, those skilled in the art will readily appreciate that the broader interactive play concepts taught herein may also be realized using any number of commercially available 2-way and/or 1-way medium range wireless communication devices and communication protocols such as, without limitation, infrared-, digital-, analog-, AM/FM-, laser-, visual-, audio-, and/or ultrasonic-based systems, as desired or expedient.

The SRRF system can preferably send and receive signals (up to 40 feet) between portable tokens (described in more detail below) and fixed transceivers. The SRRF system is also preferably able to associate a token with a particular zone as defined by a token activation area approximately 10-15 feet in diameter. Suitable embodiments of the SRRF technology described herein may be obtained from a number of suitable sources, such as AXCESS, Inc. and, in particular, the AXCESS active RFID network system for asset and people tacking applications.

In one embodiment, an entire entertainment facility may be configured with SRRF technology to provide a master control system for an interactive entertainment play environment using SRRF-compatible interactive gaming toys such as toy wands and/or other SRRF-compatible gaming devices. A typical entertainment facility provided with SRRF technology may allow 300-400 or more users to more-or-less simultaneously send and receive electronic

transmissions to and from a master control system using a toy wand, for example, or other SRRF-compatible gaming device.

For example, a master control system may comprise a software program, a centralized computer network and an associated data-base that monitors the operation of each interactive gaming toy within a particular location. This information is then used to adjust the play experience for each user based on "knowing" where the user/player has been, what objectives that player has accomplished and how many points or levels have been reached. The system can then send messages to the user throughout the play experience. For example, the system can allow or deny access to a user into a new play area based on how many points or levels have been reached by that user and/or based on what objectives that user has accomplished or helped accomplish. It can also indicate, via sending a message to the user the amount of points or specific play objectives necessary to complete a "mission" or enter the next level of play. The master control system can also send messages to the user from other users. In yet other embodiments, an interactive gaming toy may be configured to automatically download information from the master control system

The system is preferably sophisticated enough that it can allow multiple users to interact with each other, adjusting the game instantly. The master control system can also preferably interface with digital imaging and/or video capture so that the users' activities can be visually tracked. Any user can locate another user either through the video capturing system or by sending a message to another device. At the end of a visit, users are informed of their activities and the system interfaces with printout capabilities.

In another embodiment a network of transceivers may be installed at specific points throughout a facility. Players are outfitted or provided with a SRRF-compatible player identification device, sometimes referred to herein as a "token". For example, this may be a toy, card, key chain trinket, wristband, badge, or other SRRF-compatible device having a unique token identification number (TID). In one embodiment a suitable token may comprise a standard AXCESS personnel tag clipped to a player's clothing in the upper chest area. As each player enters a specific interactive play area or "game zone" within the facility, the player's token receives a low frequency activation signal containing a zone identification number (ZID). The token then responds to this signal by transmitting both its unique TID along with the ZID, thus identifying and associating the player with a particular zone.

The token's transmitted signal is received by a transceiver attached to a data network built into the facility. Using the data network, the transceiver forwards the TID/ZID data to a host computer system. The host system uses the SRRF information to log/track the guest's progress through the facility while interfacing with other interactive systems within the venue. For example, upon receipt of a TID/ZID message received from Zone **1**, the host system may trigger a digital camera focused on that area, thus capturing a digital image of the player which can now be associated with both their TID and the ZID at a specific time. In this manner the SRRF technology allows the master control system to uniquely identify and track people as they interact with various games and activities in a semi-controlled play environment. Optionally, the system may be configured for two-way messaging to enable more complex interactive gaming concepts.

In another embodiment, the SRRF technology can be used in the home. For example, a small SRRF module may be incorporated into one or more portable toys or objects that may be as small as a beeper. The SRRF module supports two-way communications with a small home transceiver, as well as with other SRRF-compatible objects. For example, a SRRF-compatible gaming toy can communicate with another SRRF-compatible gaming toy.

The toy or object may also include the ability to produce light, vibration or other sound effects based on signals received through the SRRF module to complement the operation of the toy and/or the effects achieved. In a more advanced implementation, the toy or object may be configured such that it is able to display preprogrammed messages of up to 50 characters or more on a LCD screen when triggered by user action (for example a button) or via signals received through the SRRF module. The toy or object may also be configured such that it is capable of displaying short text messages transmitted from another SRRF-compatible device.

Preferably, the SRRF transceiver is capable of supporting medium-to-long range (10-40 feet) two-way communications between SRRF-compatible toys or objects and a host system, such as a PC running SRRF-compatible software. This transceiver preferably has an integral antenna and interfaces to the host computer (and/or other consumer electronic devices) through a dedicated communication port using industry standard RS232 serial communications. If desired, each SRRF module may also incorporate a global positioning system ("GPS") device to track the exact location of each play participant within one or more play environments.

Most desirably, a SRRF module can be provided in "chip" form to be incorporated with other electronics, or designed as a packaged module suitable for the consumer market. If desired, the antenna can be embedded in the module, or integrated into the toy and attached to the module. Different modules and antennas may be required depending on the function, intelligence and interfaces required for different devices. A consumer grade rechargeable or user replaceable battery may also be used to power both the SRRF module and associated toy electronics.

Interactive Game Play

The present invention may be carried out using a wide variety of suitable game play environments, storylines and characters, as will be readily apparent to those skilled in the art. The following specific game play examples are provided for purposes of illustration and for better understanding of the invention and should not be taken as limiting the invention in any way:

Example 1

An overall interactive gaming experience and entertainment system is provided (called the "Magic" experience), which tells a fantastic story that engages children and families in a never-ending adventure based on a mysterious treasure box filled with magical objects. Through a number of entertainment venues such as entertainment facilities, computer games, television, publications, web sites, and the like, children learn about and/or are trained to use these magical objects to become powerful "wizards" within one or more defined "Magic" play environments. The play environments may be physically represented, such as via an actual existing play structure or family entertainment center, and/or it may be visually/aurally represented via computer animation, television radio and/or other entertainment venue or source. Entertainment venues or sources may include, for example, video games, computer games, television, internet,

movies and radio. These and other entertainment venues or sources can be used to provide all or part of the overall game experience in accordance with the present invention.

The magical objects use the SRRF communications system allowing for messages and information to be received and sent to and from any other SRRF-compatible object or system. Optionally, these may be programmed and linked to a SRRF-compatible master control system. Most preferably, a SRRF-compatible toy wand is provided and is configured to enable a user to interact with a master control system located within a Magic entertainment facility and/or a home-based system using common consumer electronic devices such as a personal computer or a video game system.

Example 2

A computer adventure game is provided in which one or more play participants assume the role of an imaginary character "Pajama Sam" from the popular series of computer games published by Humongous Entertainment, Inc. of Woodinville, Wash. A Pajama Sam character trading card, such as illustrated in FIGS. **13**A, **13**B, is provided to each play participant. The card may be packaged and sold together with the game software, and/or it may be sold separately, as convenience and market demands dictate.

A specially configured computer, video game, home game console, hand-held gaming device, game controller, or similar gaming device is provided with a reader, and more preferably a reader/writer such as described above, that is able to communicate with the card. As each play participant plays his or her favorite Pajama Sam game the Pajama Sam character represented by the card gains (or loses) certain attributes, such as speed, dexterity, and/or the possession of certain tools or objects associated with the game play. All of this information is preferably stored on the card so that the character attributes may be easily and conveniently transported to other similarly-equipped computer games, video games, home game consoles, hand-held game units, play facilities, and the like. In this manner, an imaginary role-play character is created and stored on a card that is able to seamlessly transcend from one play medium to the next.

Various other video games, home game consoles, and/or hand-held game units can also be configured to communicate with the Pajama Sam adventure card in a similar manner as described above. In this manner, a play participant can use the Pajama Sam trading card and the role play character he or she has developed with specific associated attributes in a favorite video action game, role-play computer game, internet adventure game or the like.

Example 3

Game participants are immersed in a world-wide treasure hunt adventure to locate a large, unknown amount of money stashed away in one or more Swiss bank accounts (the money and the accounts can be real or imaginary).

According to the storyline Willy Wonkers, a reclusive/eccentric billionaire, was unsure which of his many would-be heirs was worthy to receive his vast fortunes. So he provided in his will that upon his demise his entire estate was to be liquidated and all of the proceeds placed in a number of anonymous Swiss bank accounts under secret passwords known only to Willy. According to Willy's will these proceeds were to be distributed "to only such heir(s) who prove themselves worthy of inheriting my vast fortunes by successfully completing the Wonkers Worldwide Worthiness Challenge"—a series of intellectual, physical and moral challenges devised by Willy.

Game participants are invited to a reading of the will where they are identified as potential heirs to the Wonkers family fortune. Each participant is challenged to complete the Wonkers Worldwide Worthiness test and to thereby obtain the secret Swiss account number(s)/passwords and the Wonkers fortunes. Each game participant receives an RFID-enabled token having a unique identification number. The token is used to uniquely identify each player throughout the game play. Preferably, each token represents a specific character in the treasure hunt game. Thus, play participants would preferably select which character he or she would like to play. Each character would come with a unique story about who they are, how they were related to Willy and, most importantly, a touching little vignette about Willy that no one else knows. Hidden within each story is one or more unique clues that are necessary to solve the various challenges the players will soon face.

The game is preferably arranged and set up so that clues can only be successfully used by the particular characters who legitimately possess them. If any other character illegitimately obtains these secret clues and tries to use them in the game, he or she will fail the challenge. Preferably all of the clues (and possibly other, extrinsic clues) are required to complete the quest. Thus, players will preferably need to cooperate with other players in order to receive and exchange the necessary clues and/or other specified assistance required to enable each player to advance in the game. This may encourage playful interaction among the players by requiring them to work with (and possibly negotiate against) other players to see who can get the information and points they need to advance in the game.

Preferably, any sharing of information must be conducted within the rules of the game to be "legitimate" and recognized by the game. Thus, preferably, players cannot advance in the game simply by getting the relevant clue information from the internet or by asking other players. To be legitimate and, therefore, recognized by the game, cooperating players must present their tokens together to a compatible token reader and request that the information be shared between the characters. Once the information is legitimately exchanged within the context of the game, it then can be used by each player/character to solve further challenges and thereby advance in the game. However, if a player guesses the answer (even correctly) or if the clue information is obtained illegitimately, then the player preferably loses the quest and must purchase a new token.

More complex sharing scenarios could also be developed. For example, certain unique clue information could be revealed only during the course of game play and only to certain characters. Other characters would need this clue information to advance in the game and would have to figure out which other character(s) have the information they need. They would then need to find and contact another player who has the appropriate character token and who has successfully found the clue information they need. Then they would need to meet in order to make the necessary exchange transaction. Other complex sharing scenarios may require players to negotiate multi-party exchanges of information between three or more players/characters.

Preferably, the game is self-policing. That is, it "knows" when an exchange of information and/or other required assistance is legitimately given (i.e. conducted within the rules of the game) and can react accordingly. For example, the game may require players to simultaneously present their tokens to a compatible reader device. The reader would then

be able to verify the identities of each character/player, extract relevant information (for example, token ID, user password, etc.), and write the relevant new information to each player's token. Once the transaction is completed, each player would then legitimately possess and be able to use the information stored on his or her token to advance further in the game using any other gaming device that can read the token.

Alternatively, the same sequence can be followed as described above, except that the token is used only to verify character and player identities (for example where the token comprises an RFID read-only tag). All other relevant information is stored in a local and/or central database. The data-base keeps track of each individual player's progress, what information/clues they have learned, who they have interacted with, points accumulated, etc. Thus, game play can proceed on any device that can communicate via the internet, such as a home computer, game console, internet appliance, etc.

Alternatively, an authenticating password may be used in conjunction with each RFID-enabled token. When two or more players present their tokens to a compatible reader device as in the examples described above, each player is given an authenticating password, which the player(s) then can enter into any other gaming platform. The password may be an alpha-numeric code that is mathematically derived from the unique ID numbers of each participating player involved in the sharing transaction. Thus, it is unique to the specific players involved in the authorized exchange transaction and cannot be used by other players (even if they copy or steal the password). When the alphanumeric number is subsequently re-entered into another device (for example, a home game console or home computer) by the authorized player, the game software can reverse the mathematical algorithm using the player's unique ID (for example, previously entered at the beginning of the game) and thereby determine and/or validate the event(s) that generated the authenticating password. Existing public-key/private-key encryption algorithms and/or the like could be used for encoding and decoding the authenticating passwords. Optionally, each authenticating password could have a "shelf life" of any desired length of time such that it must be used within an hour, a day, a week, a month, etc. This might help move the game along by keeping players on their toes. Authenticating passwords could be easily printed and dispensed on special tickets or stickers, which can be collected. Alternatively, and/or in addition, authenticating passwords can be readily printed on any ordinary cash register receipt as part of any purchase transaction (for example at a fast food or other retail establishment).

The treasure hunt game may be continual in its progression or it may be orchestrated in real time via the internet or any other mass distribution or communication medium, such as TV commercials, mini-gameboy installments, computer-animated MPEG videos. For example, each game might last several days/weeks/months, and may be launched in conjunction with a promotional/advertising campaign for a complementing movie or the like. In that event, players would preferably sign up in advance to receive their tokens to play the game or they can purchase one or more tokens at any participating gaming outlet before or during the game.

Example 4

Game participants are immersed in a "whodunit" murder mystery. For example, this interactive adventure game could be based on the popular board game "Clue™." Players learn that a murder has been committed and they must figure out who did it, in what room, with what weapon, etc. The game is preferably live-action interactive with simulated live-news casts, letters, telephone calls, etc.

According to the storyline Major Mayonnaise is found dead in his palatial mansion of an apparent massive coronary. However, clues at the crime scene indicate that this was in fact a carefully planned murder. Based on the indisputable physical evidence, the murder could only have been committed by one of eight possible suspects. It is common knowledge that each player hated Mayonnaise and, thus, each player has been identified as a suspect in the murder. Thus, the mission is to figure out WHO DUNIT! and how.

Game play is essentially as described above in connection with Example 3. Players receive RFID-enabled tokens uniquely identifying each player. Preferably, each token represents one of the eight suspect characters in the Whodunit game. As in Example 3, above, each character would preferably have a unique story about who they are, where they were on the night of the murder, and why they dislike Mayonnaise. Hidden within the collective stories are the unique clues necessary to solve the murder mystery challenge. Players cooperate by exchanging clues and other information needed to solve the mystery. As in Example 3, the game is preferably set up and organized so that relevant clues can only be successfully used by the particular character(s) who legitimately possess them. Any player who tries to cheat will preferably be disqualified or otherwise prevented from advancing in the game.

Example 5

Game participants are immersed in a magic-themed computer adventure game. For example, this interactive adventure game could be based on the popular "Harry Potter™" series of children's books by J. K. Rowling and licensed computer games by Electronic Arts. Players learn basic magic skills as they progress through an adventure game and solve one or more challenges/puzzles.

According to the storyline players are students enrolled at the Hogwart school of witchery where they are learning witchcraft, spell casting, secret messaging and the like. But something terrible and evil has happened and it is up to each player and their fellow classmates to solve the mystery and ferret out the evil-doer and save the school.

Game play is essentially as described above in connection with Examples 3 and 4. Players preferably receive RFID-enabled tokens. Each token provides a unique identifier for the player and preferably can store his or her progress in the game. Each player begins the adventure with essentially the same magic powers, skills and abilities. Each player may also receive a toy magic wand or other similar interactive gaming device which the player must learn to use to accomplish certain goals set out in the game.

Players cooperate by exchanging clues and other information needed to solve the mystery. As in Examples 3 and 4, the game is preferably organized so that relevant clues can only be successfully used by the particular character(s) who legitimately possess them. Any player who tries to cheat will preferably be disqualified or otherwise prevented from advancing in the game.

An authenticating password system is preferably used to verify or authenticate game events and to thereby discourage cheating. These secret codes or pass words may be obtained from any participating game venue (for example, fast food venues, toy store, theme parks, etc.) or other sources that will become obvious once the game is implemented. Once

a secret password is obtained, players can enter it into a specially enabled home computer game, arcade game, portable gaming device, or other device, to get secret powers and/or to find secret parts of the game otherwise unobtainable without the secret code. For example, a player may buy a meal from a fast-food vendor and as part of the meal package would receive a token and/or a secret code. The secret code preferably may be used to access a secret portion or level of a popular computer adventure game.

Most preferably (although not required) authenticating passwords are unique or semi-unique to the player(s) who possess them. For example, each password may be an alpha-numeric code that is mathematically derived from a unique ID number stored on each participating player's token or from a password the player selects. Thus, the secret code is more-or-less unique to the specific player(s) involved in an authenticated game event and preferably cannot be used by other players (even if they copy or steal the secret code). When the alpha-numeric number is subsequently re-entered into another device (for example, a home game console or home computer) by the authorized player, the game software can reverse the mathematical algorithm using the player's unique ID or user-selected password (this may or may not be previously entered at the beginning of the game) and thereby determine and/or validate the game event(s) that generated the authenticating password. Existing public-key/private-key encryption algorithms and/or the like could be used for encoding and decoding the authenticating passwords.

To make the password system more convenient, the token device may optionally include one or more entry buttons and an LCD display. When players insert the token into an enabled reader, the secret code(s) are downloaded automatically to the token device and can be displayed on the LCD screen. The token thus becomes a secret encoder/decoder device that allows players to electronically transport and send/receive secret messages and codes to each other that can only be read by players/devices that possess the correct authenticating code. An optional communication port may allow secret codes to be downloaded directly to a computer game, portable game unit or other devices using, for example, a standard USB communication port.

Example 6

A computer-animated game is provided wherein game participants learn to create various spells and/or potions by combining and mixing various ingredients (RFID-tagged gaming items) in an RFID-enabled mixing cauldron (for example, a peripheral gaming device as illustrated and described above in connection with FIG. **15**C).

For example, players may be provided with multiple gaming items each comprising an RFID-tagged toy representing various potion ingredients (for example, a spider, a batwing, a potion vial, and so forth). In one embodiment, an initial quantity of such gaming items (for example, 3-6 different gaming items) may be packaged and sold together with a cauldron-themed peripheral gaming device configured to operate with a desired gaming platform (for example, a home computer, home game console, hand-held game unit, or the like). Additional gaming items may be earned by game participants as they play and progress in the game. Alternatively, gaming items may be purchased from a retail vendor and/or otherwise provided as part of one or more retail transactions.

Gameplay preferably progresses in accordance with a desired theme and/or storyline. For example, game participants may direct a virtual character (for example, a witch or warlock) in a Halloween-themed computer-adventure game. If desired, game participants may control the movements and/or activities of the virtual character using one or more input devices, such as a conventional wired or wireless game controller. At certain points in the game, players are preferably challenged to combine and mix various ingredients (RFID-tagged gaming items) in the RFID-enabled mixing cauldron to create one or more desired potions and/or spells. For example, a particular potion or spell may be required to help the virtual character progress or advance in the game.

In one embodiment, the game software may cause a potion recipe to be displayed on an associated display device. Game participants are then challenged to follow the recipe and thereby create the desired potion by dropping various ingredients (RFID-tagged gaming items) into the RFID-enabled cauldron. As each item is dropped into the cauldron, preferably the game reacts accordingly by producing one or more computer-animated visual, audible and/or tactile effects on one or more associated display devices. If desired, the cauldron may also be configured to display various light, vibration or sound effects (for example, simulating boiling, sparking, gurgling, shaking, or popping) as directed by the game software. The effects may be the same or different for each gaming item (or combination of gaming items) added to the cauldron. For example, displayed effects may be determined based on information wirelessly communicated by each gaming item as it is added to the RFID-enabled cauldron.

Recipes may be as simple or complex as desired. For example, a simple recipe may require a certain combination of gaming items (for example, three gaming items) to be placed in the cauldron (for example, one spider and two batwings). A somewhat more complex recipe may require certain gaming items to be added to the cauldron in a particular order. Yet even more complex recipes may require game participants to carefully time the addition of certain gaming items to the cauldron based on particular observed game events and/or conditions (for example, wait for the mixture to hiss and turn green, then immediately add two spiders). If desired, all or part of the potion recipe may be contained within in a riddle or a puzzle.

Those skilled in the art will appreciate that multiple thousands of possible unique recipes and ingredient combinations may be achieved using a relatively small number of gaming items. For example, providing 12 different gaming items would allow game participants to create up to 1,728 unique 3-ingredient potions, 20,736 unique 4-ingredient potions, and 248,832 unique 5-ingredient potions. Using 24 different gaming items would allow game participants to create up to 13,824 unique 3-ingredient potions, 331,776 unique 4-ingredient potions, and 7,962,624 unique 5-ingredient potions. Adding a timing element would further increase the number of possibilities because the same combination and ordering of ingredients could produce two or more different potions depending upon the timing element.

In an alternative embodiment, players are not provided with a recipe at all, but must experiment on their own (or in cooperation with other players) to discover how to use the gaming items to create various desired potions or spells. For example, players may be challenged to discover potion recipes by experimenting with various combinations of gaming items and/or the ordering and timing of adding those gaming items to the cauldron to produce various desired potions or spells. This discovery process may or may not be assisted by the game. For example, during the course of the game players may be provided with certain hints or infor-

mation concerning the ingredients of a particular desired potion. As another example, players may learn that certain ingredients should never be combined with certain other ingredients. As another example, the game may react by displaying either positive or negative effects as each gaming item is added to the cauldron.

Example 7

Two or more interlinked games are provided and configured such that as a participant earns points, levels, strengths, and the like by playing one game, those earnings affect how the participant advances or progresses in a second game. For example, a player may play a first car racing game and reach "expert level" with "turbo boost" and "ten extra spare tires." Then when the player goes to play a second car racing game the second game recognizes the player's previously earned status and upgrades. Thus, the player is able to start the second car racing game at the equivalent of expert level with turbo boost and ten extra spare tires.

In other embodiments, players may earn upgrades by purchasing certain retail items from participating retail vendors. For example, a player may be able to earn an "extreme exhaust system" by purchasing five HAPPY MEALS® at MCDONALD'S® and correctly answer twenty questions in an online quiz. In one embodiment, the player receives one or more authenticating alphanumeric codes printed on an ordinary cash register receipt. Once the player enters these codes and successfully completes the quiz, the player's status is updated to include the "extreme exhaust system." When the player goes back to play the first car racing game and/or the second car racing game, the games will recognize that the player has earned the extreme exhaust system.

In some embodiments a purchased retail item may tie into the storyline of the game and/or correspond to a virtual item in the game. For example, a player may wish to obtain a "fire retardant driving jacket" to make the virtual game character more likely to survive a crash. The player may go to the local GYMBOREE® and purchase a particular jacket. The particular jacket comes with a special code that the player enters online to obtain the "fire retardant driving jacket." When the player returns to play the first car racing game and/or the second car racing game, the games will recognize that that the player has earned the fire retardant driving jacket.

Although this invention has been disclosed in the context of certain preferred embodiments and examples, it will be understood by those skilled in the art that the present invention extends beyond the specifically disclosed embodiments to other alternative embodiments and/or uses of the invention and obvious modifications and equivalents thereof. Thus, it is intended that the scope of the present invention herein disclosed should not be limited by the particular disclosed embodiments and examples described above, but should be determined only by a fair reading of the claims that follow.

What is claimed is:

1. An interactive gaming toy for playing a game having both physical and virtual play elements, said interactive gaming toy comprising:

a physical toy comprising a doll or action figure having an internal cavity configured to house one or more electrical components and associated circuitry;

non-volatile memory disposed within said internal cavity, said non-volatile memory storing a first selection of information comprising an identifier configured to identify said interactive gaming toy in an associated computer-animated game, and a second selection of information describing powers or abilities possessed by a role-play character in said computer-animated game;

a first radio frequency (RF) transceiver configured to provide short-range two-way wireless communications with a first wireless-compatible device over a first communication range less than 60 centimeters, and wherein said short-range two-way wireless communications include at least said first selection of information and said second selection of information;

a second RF transceiver configured to provide medium- or long-range two-way wireless communications with a second wireless-compatible device over a second communication range greater than 10 feet and less than 100 meters, and wherein said medium- or long-range two-way wireless communications include at least said first selection of information; and

an inductance coil disposed within said internal cavity and configured to generate electrical energy when exposed to an electromagnetic field, and wherein said first RF transceiver or said second RF transceiver is electrically coupled to said inductance coil and powered by said electrical energy.

2. The interactive gaming toy of claim **1** wherein said first RF transceiver comprises a radio frequency identification (RFID) transponder.

3. The interactive gaming toy of claim **1** wherein said second RF transceiver is configured to provide medium-range two-way wireless communications with said second wireless-compatible device over a wireless communication range of between 10 feet and 40 feet.

4. The interactive gaming toy of claim **1** further comprising a magnetic attachment interface configured to removably secure an auxiliary component comprising a mating magnetic attachment interface.

5. The interactive gaming toy of claim **4** wherein said auxiliary component comprises a second non-volatile memory storing a third selection of information comprising powers or abilities possessed by a role-play character in said computer-animated game.

6. The interactive gaming toy of claim **1** further comprising a motion sensor selected from the group consisting of: a tilt sensor, a gyro-sensor, and an accelerometer, said motion sensor configured to generate sensor state information based at least in part on one or more sensed motions of said physical toy, and wherein said medium- or long-range two-way wireless communications include said sensor state information.

7. The interactive gaming toy of claim **1** further comprising a touch sensor configured to generate sensor state information based on sensed touching of a user's finger thereon, and wherein said medium- or long-range two-way wireless communications include said sensor state information.

8. An interactive gaming toy for playing a game having both physical and virtual play elements, said interactive gaming toy comprising:

a base component comprising an internal cavity configured to house one or more electrical components and associated circuitry, said base component further comprising a first attachment interface for removably attaching at least one auxiliary component;

a first non-volatile memory disposed within said internal cavity and storing a first selection of information comprising an identifier configured to identify said base component in an associated computer-animated game;

a first radio frequency (RF) transceiver electrically coupled to said first non-volatile memory and config-

ured to provide medium- or long-range two-way wireless communications with a first wireless-compatible device over a wireless communication range greater than 10 feet and less than 100 meters, and wherein said medium- or long-range two-way wireless communications include at least said first selection of information; and

a plurality of auxiliary components each comprising: i) a second attachment interface configured to mate with said first attachment interface, ii) a second non-volatile memory storing a second selection of information describing selected characteristics of a virtual character or object in said computer-animated game, and iii) a second RF transceiver electrically coupled to said second non-volatile memory and configured to provide short-range two-way wireless communications with a second wireless-compatible device over a wireless communication range less than 60 centimeters, and wherein said short-range two-way wireless communications include at least said second selection of information.

9. The interactive gaming toy of claim **8** wherein said base component comprises: a toy wand, a toy doll, or an action figure.

10. The interactive gaming toy of claim **8** wherein said first attachment interface comprises a first magnet and wherein said second attachment interface comprises a second magnet configured to mate with said first magnet.

11. The interactive gaming toy of claim **8** wherein said base component further comprises an inductance coil electrically coupled to said first RF transceiver, said inductance coil configured to generate electrical energy when exposed to an electromagnetic field to thereby power at least said first RF transceiver.

12. The interactive gaming toy of claim **11** further comprising an effects generator configured to produce one or more light, vibration or sound effects based on game-relevant information received by said first RF transceiver and wherein said effects generator is configured to be powered by said inductance coil when said inductance coil is exposed to an electromagnetic field.

13. The interactive gaming toy of claim **8** further comprising a light emitting module secured in fixed relation with said base component and configured to emit a visible or infrared light signal capable of being detected by a camera.

14. The interactive gaming toy of claim **8** further comprising a motion sensor selected from the group consisting of: a tilt sensor, a gyro-sensor, and an accelerometer, said motion sensor disposed within said internal cavity and configured to generate sensor state information based at least in part on one or more sensed movements of said base component in free space.

15. An interactive gaming toy for playing a game having both physical and virtual play elements, said interactive gaming toy comprising:

a base component comprising an internal cavity configured to house one or more electrical components and associated circuitry, said base component further comprising a first attachment interface for removably attaching at least one modular component;

a first non-volatile memory disposed within said internal cavity and storing a first selection of information describing selected characteristics of a virtual character or object in a computer-animated game;

a first radio frequency (RF) transceiver electrically coupled to said first non-volatile memory and configured to provide first two-way wireless communications with a first wireless-compatible device over a limited wireless communication range less than 60 centimeters, and wherein said first two-way wireless communications include at least said first selection of information;

an inductance coil disposed within said internal cavity and configured to generate electrical energy when exposed to an electromagnetic field, and wherein said first RF transceiver is powered by said electrical energy; and

a plurality of selectively attachable modular components each comprising: i) a second attachment interface configured to detachably mate with said first attachment interface, ii) a second non-volatile memory storing a second selection of information describing selected characteristics of a virtual character or object in said computer-animated game, and iii) a second RF transceiver electrically coupled to said second non-volatile memory and configured to provide second two-way wireless communications with a second wireless-compatible device over a limited wireless communication range less than 60 centimeters, and wherein said second two-way wireless communications include at least said second selection of information.

16. The interactive gaming toy of claim **15** wherein said first attachment interface comprises a first magnet and wherein said second attachment interface comprises a second magnet configured to mate with said first magnet.

17. The interactive gaming toy of claim **15** wherein said base component further comprises an effects generator configured to produce one or more light, vibration or sound effects based on game-relevant information received by said first RF transceiver and wherein said effects generator is configured to be powered by said inductance coil when said inductance coil is exposed to an electromagnetic field.

18. The interactive gaming toy of claim **15** further comprising a light emitting module secured in fixed relation with said base component and configured to emit a directional infrared light signal capable of being detected by a camera or an infrared sensor.

19. The interactive gaming toy of claim **15** wherein said first wireless-compatible device comprises an RFID reader/writer configured to wirelessly power and communicate with said first RF transceiver.

20. The interactive gaming toy of claim **15** wherein said base component and said plurality of selectively attachable modular components are configured to form an assembled gaming toy comprising a doll or action figure embodying a mythical creature selected from the group consisting of: a dragon, a gnome, a wizard, a pixie, and a unicorn.

* * * * *