US009522270B2

(12) **United States Patent**
Perryman et al.

(10) **Patent No.: US 9,522,270 B2**
(45) **Date of Patent: Dec. 20, 2016**

(54) **CIRCUIT FOR AN IMPLANTABLE DEVICE**

(71) Applicant: **Micron Devices LLC**, Miami Beach, FL (US)

(72) Inventors: **Laura Tyler Perryman**, Miami Beach, FL (US); **Chad David Andresen**, Miami Beach, FL (US); **Bertan Bakkaloglu**, Scottsdale, AZ (US)

(73) Assignee: **Micron Devices, LLC**, Miami Beach, FL (US)

(*) Notice: Subject to any disclaimer, the term of this patent is extended or adjusted under 35 U.S.C. 154(b) by 0 days.

(21) Appl. No.: **14/796,067**

(22) Filed: **Jul. 10, 2015**

(65) **Prior Publication Data**

US 2016/0008602 A1 Jan. 14, 2016

Related U.S. Application Data

(60) Provisional application No. 62/022,768, filed on Jul. 10, 2014.

(51) **Int. Cl.**
A61N 1/00 (2006.01)
A61N 1/36 (2006.01)
(Continued)

(52) **U.S. Cl.**
CPC ***A61N 1/36125*** (2013.01); ***A61N 1/3787*** (2013.01); ***A61N 1/37223*** (2013.01);
(Continued)

(58) **Field of Classification Search**
CPC A61N 1/36125; A61N 1/37223; A61N 1/3787; A61B 5/04001; A61B 5/7214; A61B 5/076; H02J 5/00; H02J 17/00
See application file for complete search history.

(56) **References Cited**

U.S. PATENT DOCUMENTS

5,735,887 A * 4/1998 Barreras, Sr. A61N 1/08 128/903
5,941,906 A * 8/1999 Barreras, Sr. A61N 1/36071 607/60
(Continued)

FOREIGN PATENT DOCUMENTS

WO 01/89629 11/2001
WO 2012/103519 8/2012
(Continued)

OTHER PUBLICATIONS

International Search Report and Written Opinion in International Application No. PCT/US2015/40033, mailed Oct. 6, 2015, 7 pages.

Primary Examiner — Robert N Wieland
(74) *Attorney, Agent, or Firm* — Fish & Richardson P.C.

(57) **ABSTRACT**

An integrated circuit includes: a radio-frequency (RF) to direct current (DC) rectifying circuit coupled to one or more antenna on an implantable wirelessly powered device, the rectifying circuit configured to: rectify an input RF signal received at the one or more antennas and from an external controller through electric radiative coupling; and extract DC electric power and configuration data from the input RF signal; a logic control circuit connected to the rectifying circuit and a driving circuit, the logic control circuit configured to: generate a current for the driving circuit solely using the extracted DC electrical power; in accordance with the extracted configuration data, set polarity state information for each electrode; and a driving circuit coupled to one or more electrode, the driving circuit comprising current mirrors and being configured to: steer, to each electrode and via the current mirrors, a stimulating current solely from the generated current.

14 Claims, 19 Drawing Sheets

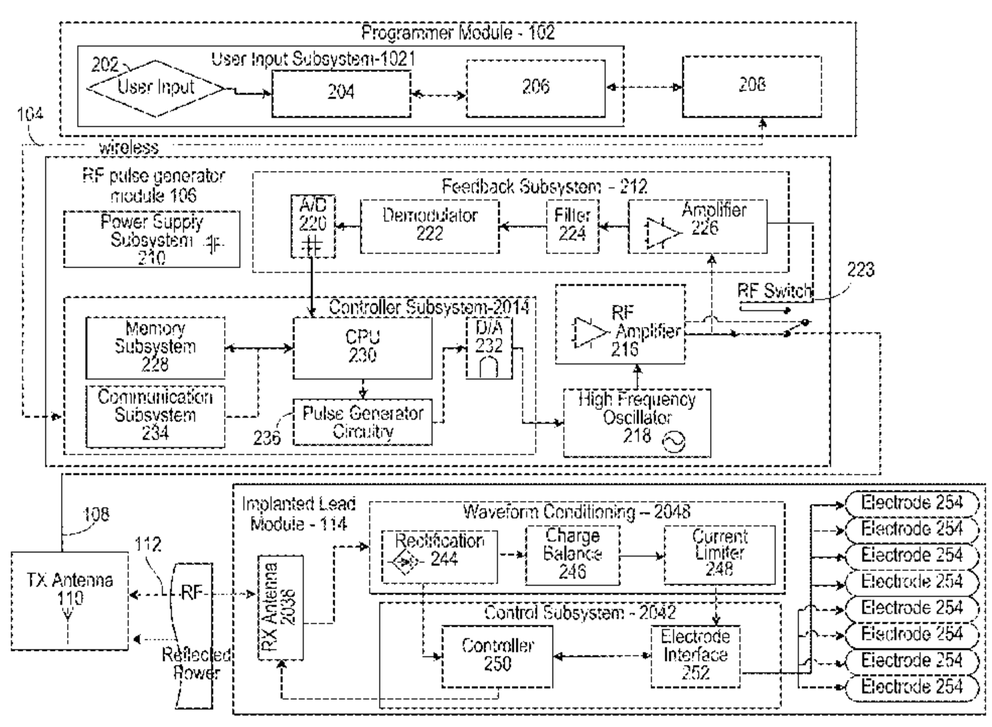

(51) **Int. Cl.**

A61N 1/372	(2006.01)
A61N 1/378	(2006.01)
H02J 5/00	(2016.01)
H02J 17/00	(2006.01)

(52) **U.S. Cl.**
CPC ***H02J 5/00*** (2013.01); ***H02J 17/00*** (2013.01); *H02J 50/20* (2016.02)

(56) **References Cited**

U.S. PATENT DOCUMENTS

2007/0032827	A1	2/2007	Katims	
2007/0067004	A1*	3/2007	Boveja	A61N 1/36017 607/45
2010/0125315	A1	5/2010	Parramon et al.	
2010/0280568	A1*	11/2010	Bulkes	A61N 1/05 607/33
2011/0276103	A1*	11/2011	Maile	A61N 1/36114 607/9
2012/0330384	A1	12/2012	Perryman et al.	
2014/0051965	A1	2/2014	Zdeblick et al.	
2014/0088379	A1*	3/2014	Irazoqui	A61B 5/076 600/302
2015/0238764	A1*	8/2015	Franke	A61N 1/36125 600/377

FOREIGN PATENT DOCUMENTS

WO	2012/138782	10/2012
WO	2013/019757	2/2013
WO	2013/025632	2/2013
WO	2013/040549	3/2013

* cited by examiner

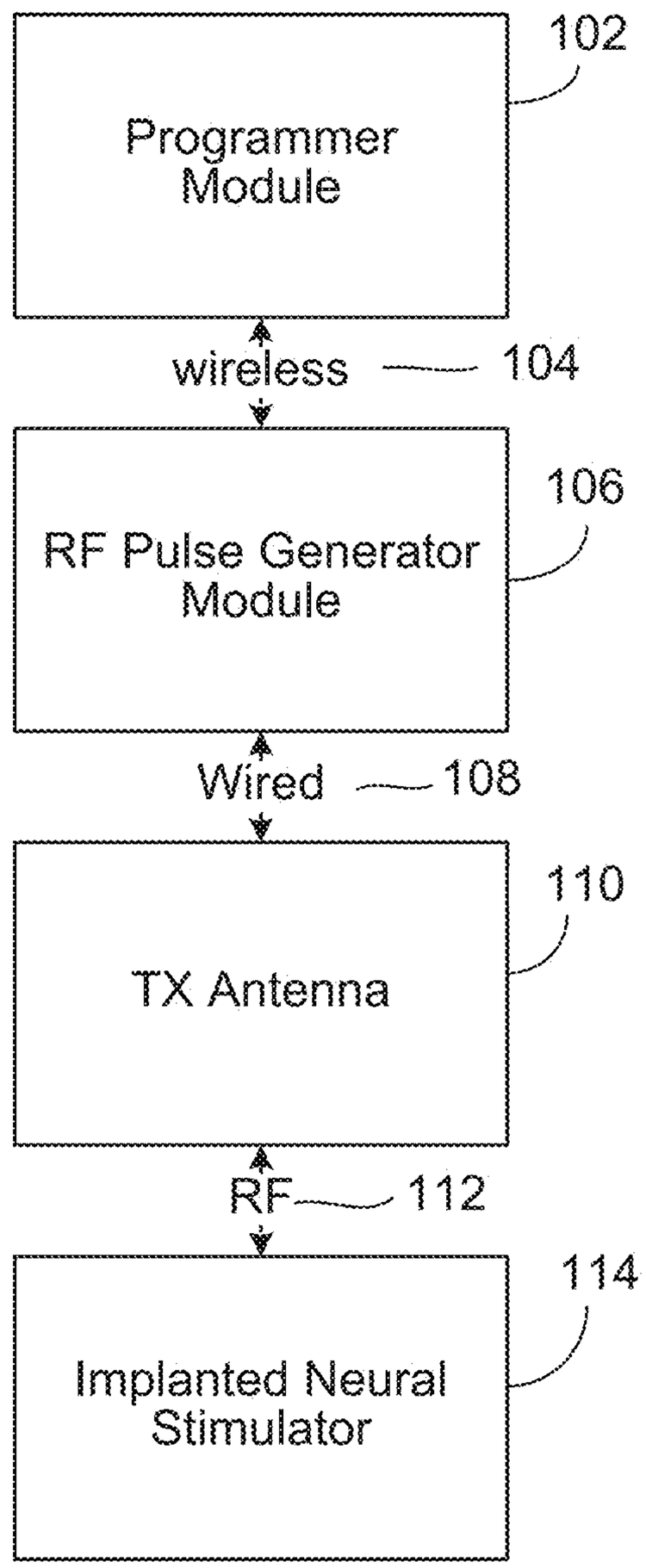
Programmer Module
102
wireless
104
RF Pulse Generator Module
106
Wired
108
TX Antenna
110
RF
112
Implanted Neural Stimulator
114

FIG 1

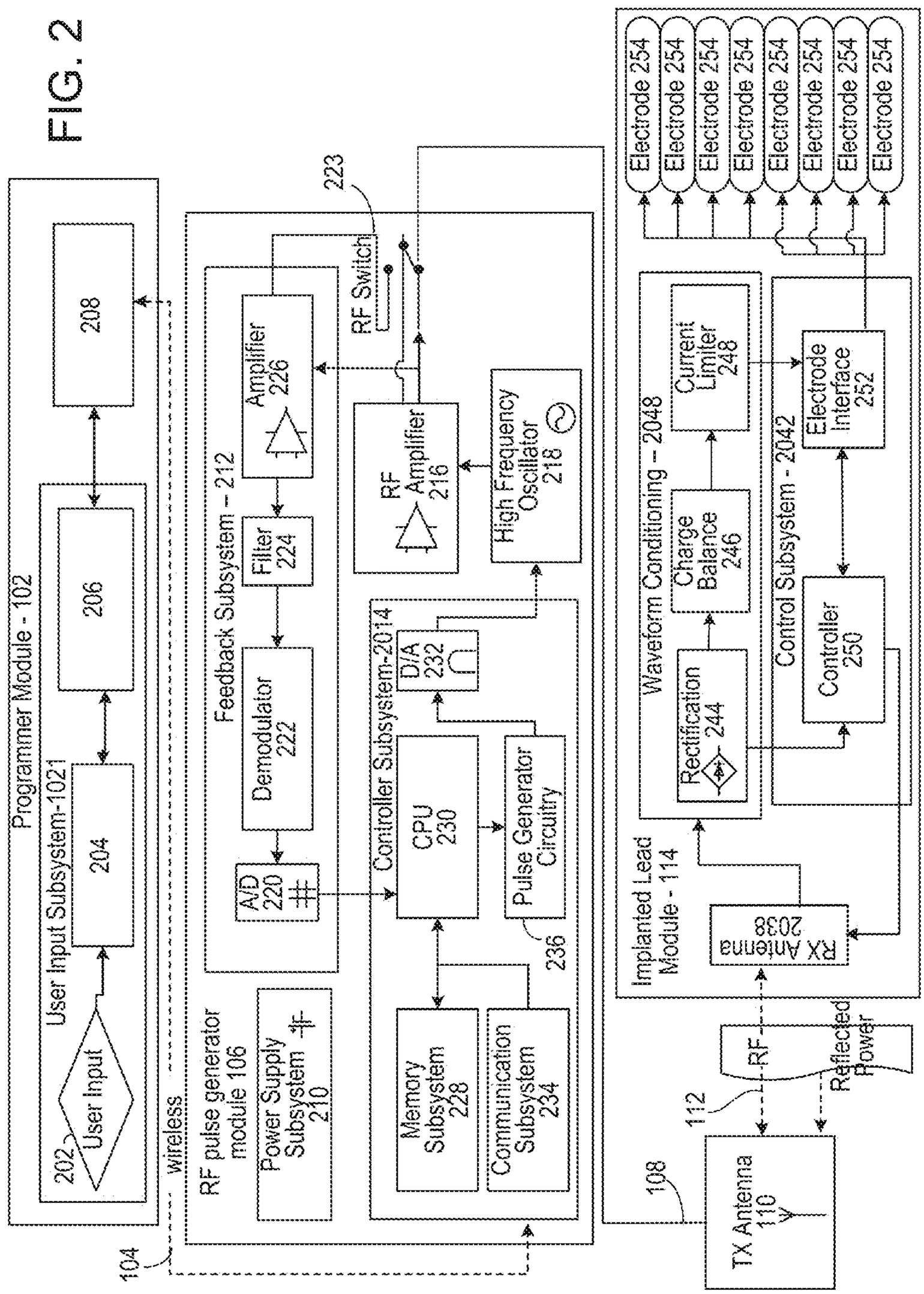
FIG. 2
Programmer Module - 102
User Input Subsystem-1021
202
User Input
204
206
208
wireless
104
RF pulse generator module 106
Power Supply Subsystem 210
Feedback Subsystem - 212
A/D 220
Demodulator 222
Filter 224
Amplifier 226
RF Switch
223
RF Amplifier 216
High Frequency Oscillator 218
Controller Subsystem-2014
CPU 230
D/A 232
Pulse Generator Circuitry
236
Memory Subsystem 228
Communication Subsystem 234
Implanted Lead Module - 114
Waveform Conditioning – 2048
Rectification 244
Charge Balance 246
Current Limiter 248
Control Subsystem - 2042
Controller 250
Electrode Interface 252
Electrode 254
Electrode 254
Electrode 254
Electrode 254
Electrode 254
Electrode 254
Electrode 254
Electrode 254
RX Antenna 2038
RF
Reflected Power
112
108
TX Antenna 110

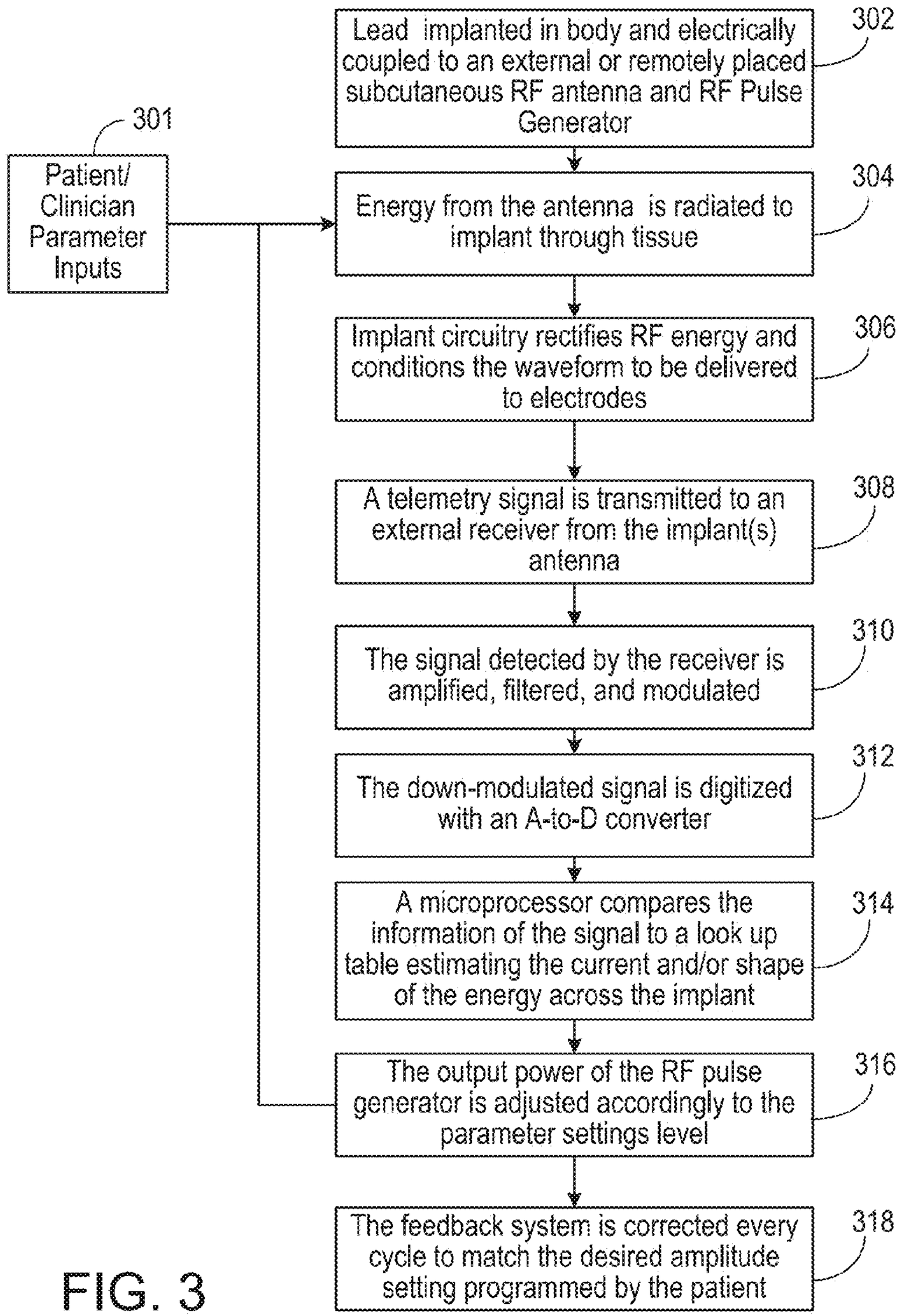
Lead implanted in body and electrically coupled to an external or remotely placed subcutaneous RF antenna and RF Pulse Generator
302
301
Patient/ Clinician Parameter Inputs
Energy from the antenna is radiated to implant through tissue
304
Implant circuitry rectifies RF energy and conditions the waveform to be delivered to electrodes
306
A telemetry signal is transmitted to an external receiver from the implant(s) antenna
308
The signal detected by the receiver is amplified, filtered, and modulated
310
The down-modulated signal is digitized with an A-to-D converter
312
A microprocessor compares the information of the signal to a look up table estimating the current and/or shape of the energy across the implant
314
The output power of the RF pulse generator is adjusted accordingly to the parameter settings level
316
The feedback system is corrected every cycle to match the desired amplitude setting programmed by the patient
318

FIG. 3

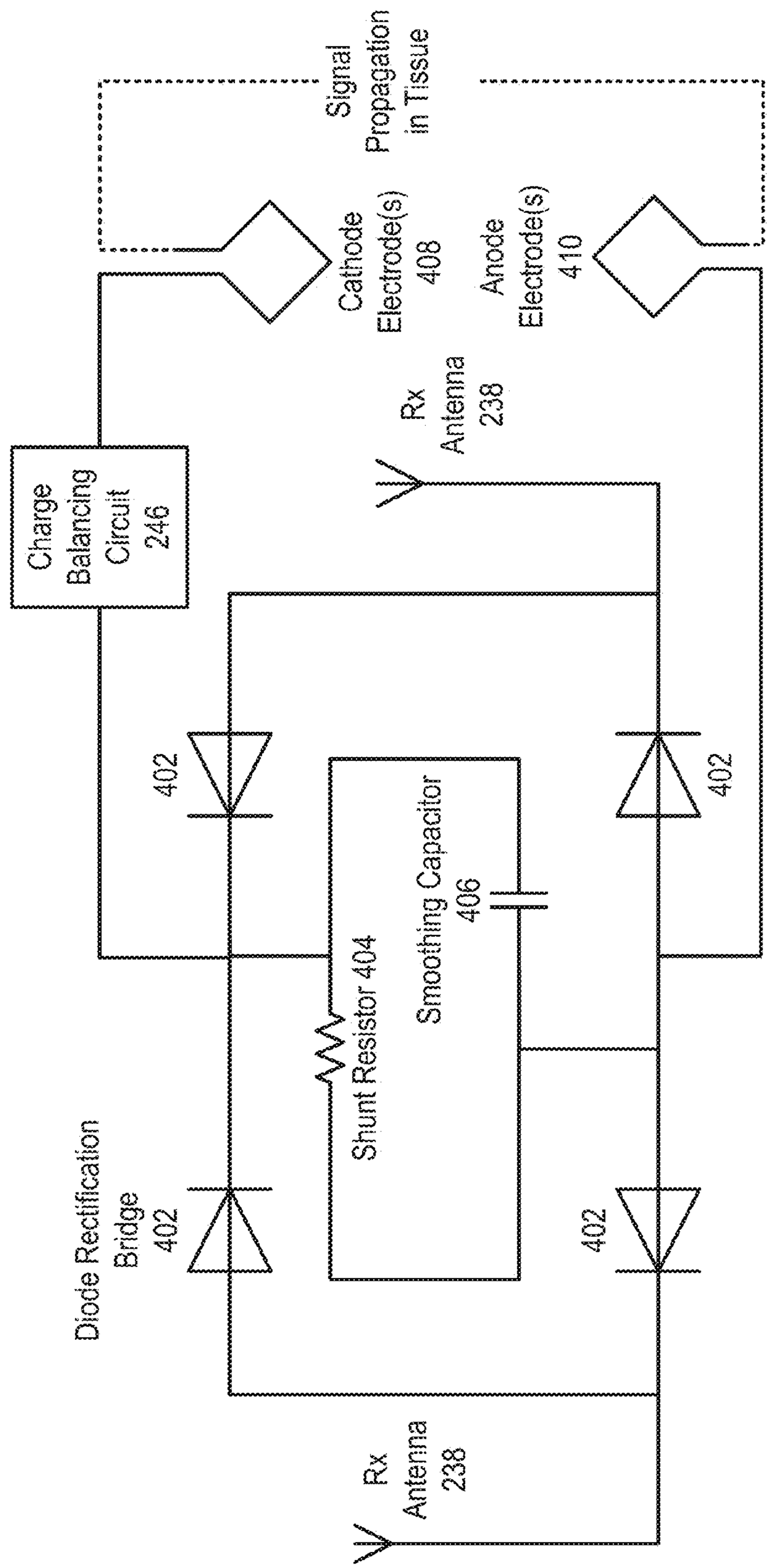
Signal Propagation in Tissue
Cathode Electrode(s) 408
Anode Electrode(s) 410
Rx Antenna 238
Charge Balancing Circuit 246
402
402
Smoothing Capacitor 406
Shunt Resistor 404
Diode Rectification Bridge 402
402
Rx Antenna 238

FIG. 4

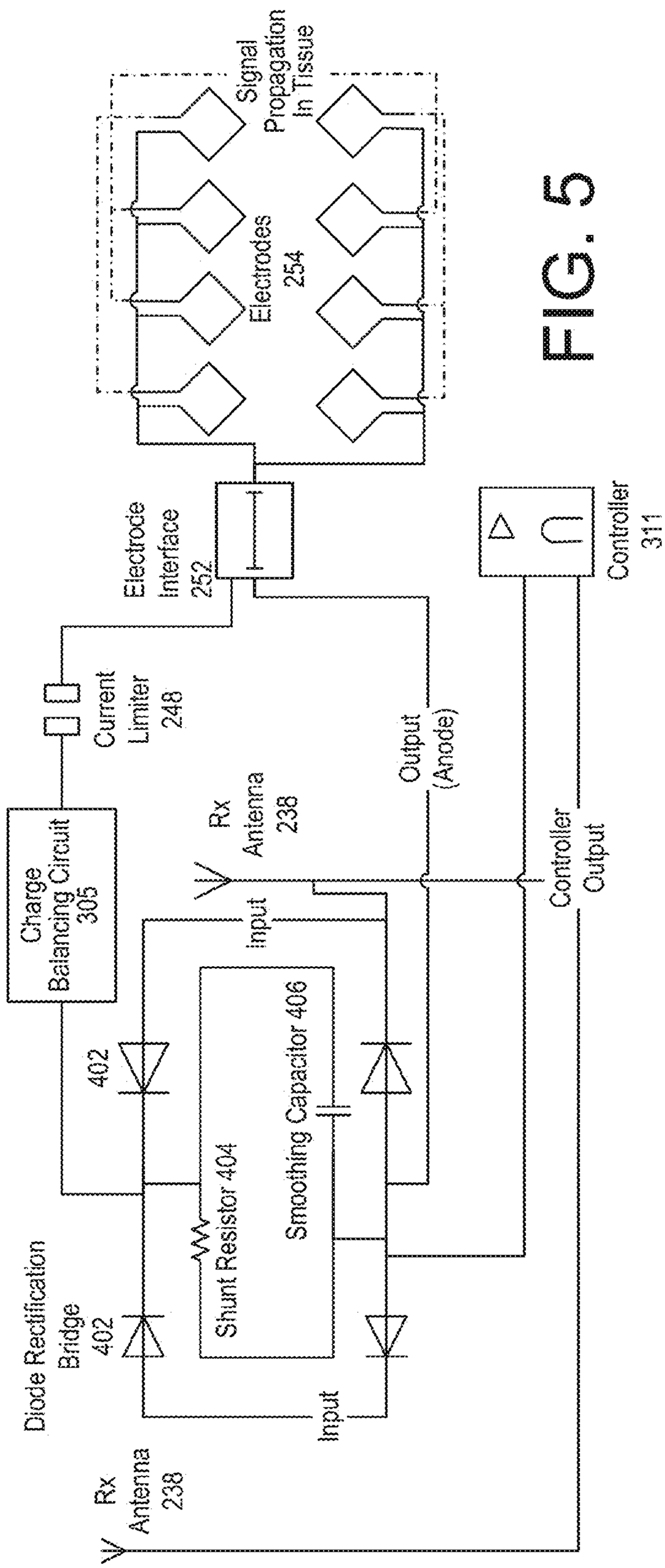
Signal Propagation In Tissue
Electrodes 254
Electrode Interface 252
Controller 311
Current Limiter 248
Output (Anode)
Rx Antenna 238
Charge Balancing Circuit 305
Controller Output
Input
402
Smoothing Capacitor 406
Shunt Resistor 404
Diode Rectification Bridge 402
Input
Rx Antenna 238

FIG. 5

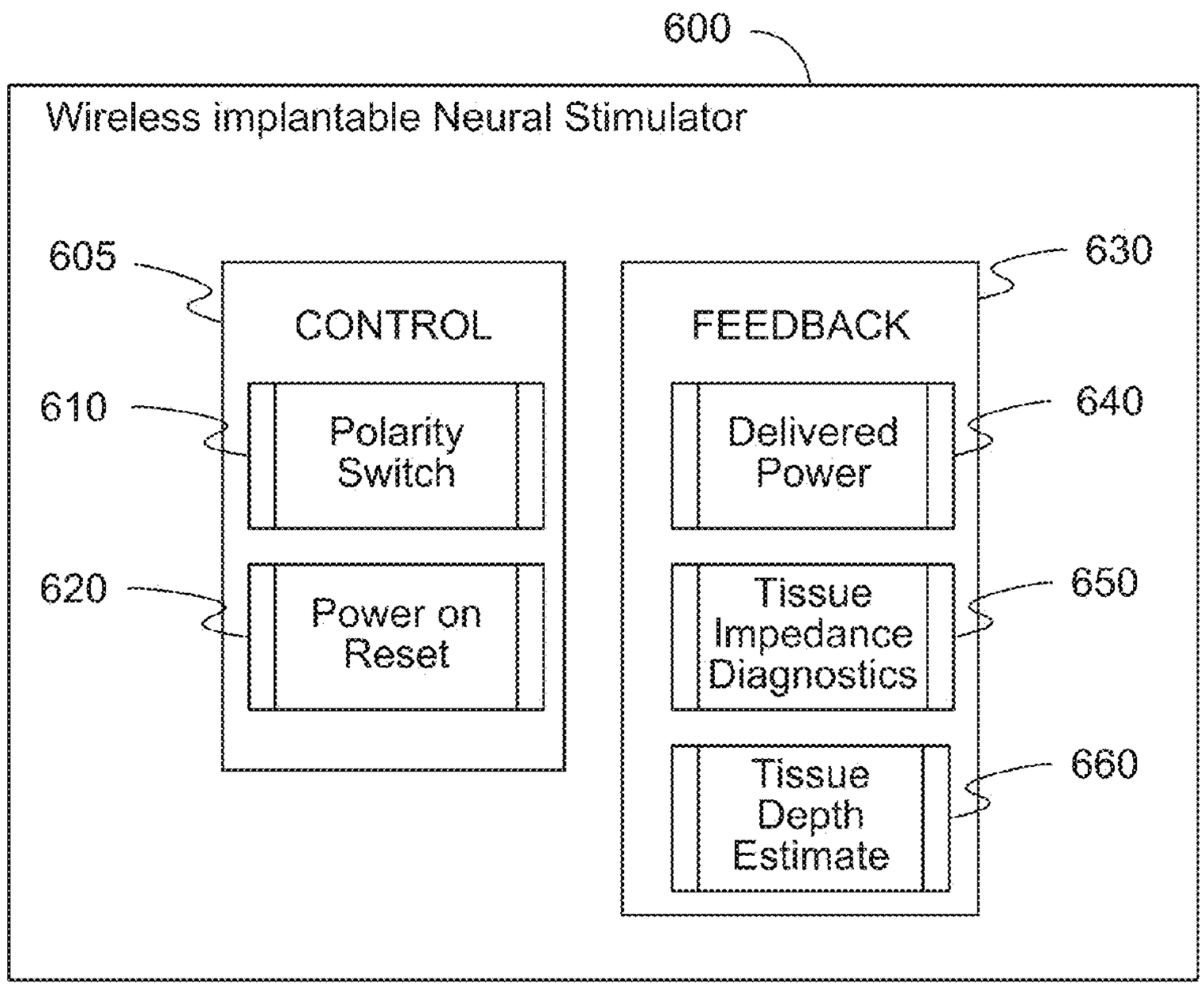
600
Wireless implantable Neural Stimulator
605
CONTROL
610
Polarity Switch
620
Power on Reset
630
FEEDBACK
640
Delivered Power
650
Tissue Impedance Diagnostics
660
Tissue Depth Estimate

FIG. 6

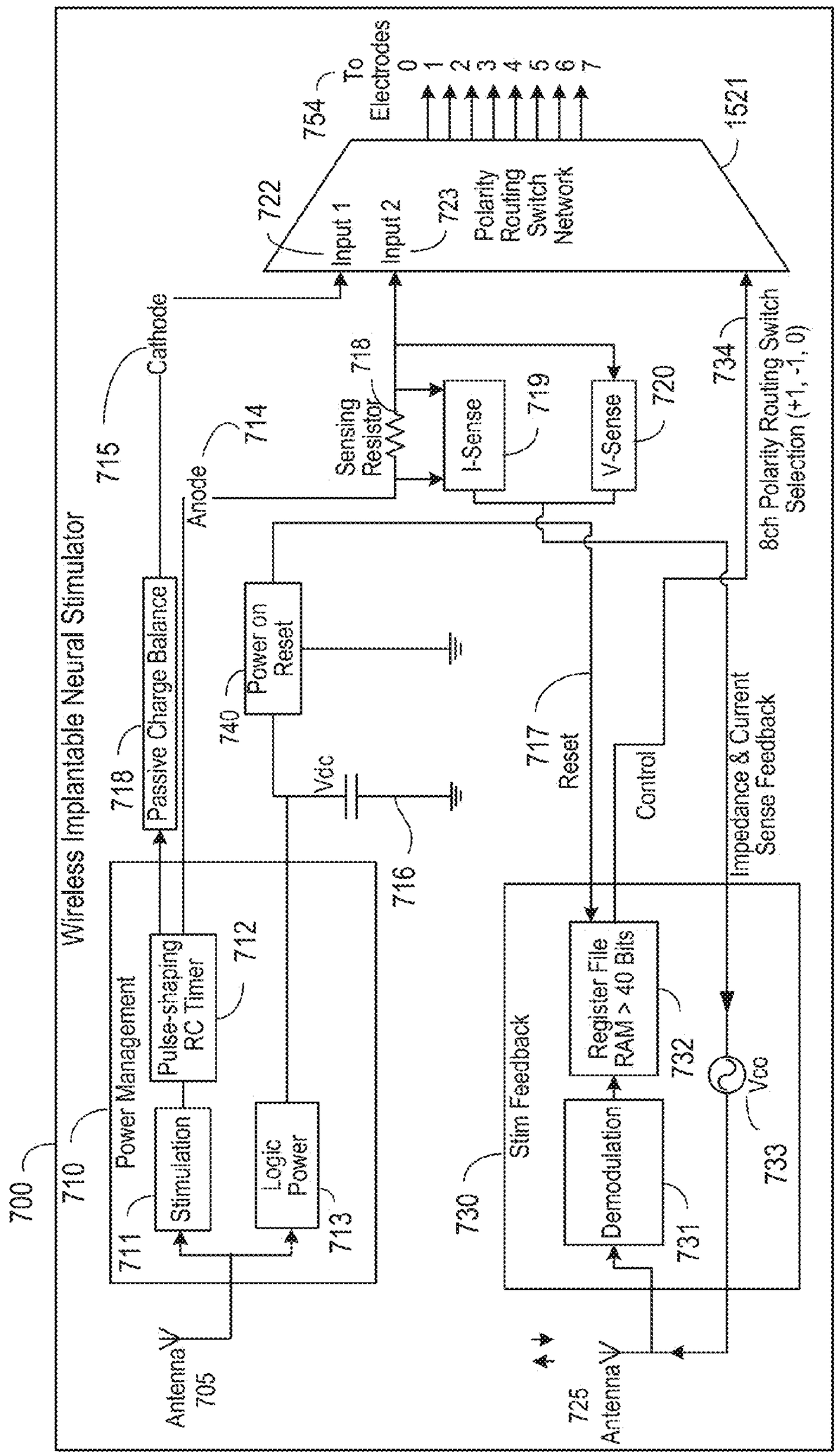
Wireless Implantable Neural Stimulator
700
Power Management
710
Stimulation
711
Pulse-shaping RC Timer
712
Logic Power
713
Antenna V
705
Passive Charge Balance
718
Cathode
715
Anode
714
Power on Reset
740
Vdc
716
Input 1
722
Input 2
723
Polarity Routing Switch Network
754
To Electrodes
0 1 2 3 4 5 6 7
1521
Sensing Resistor
718
I-Sense
719
V-Sense
720
8ch Polarity Routing Switch Selection (+1, -1, 0)
734
717
Reset
Control
Impedance & Current Sense Feedback
Stim Feedback
730
Demodulation
731
Register File RAM > 40 Bits
732
Vco
733
Antenna V
725

FIG. 7

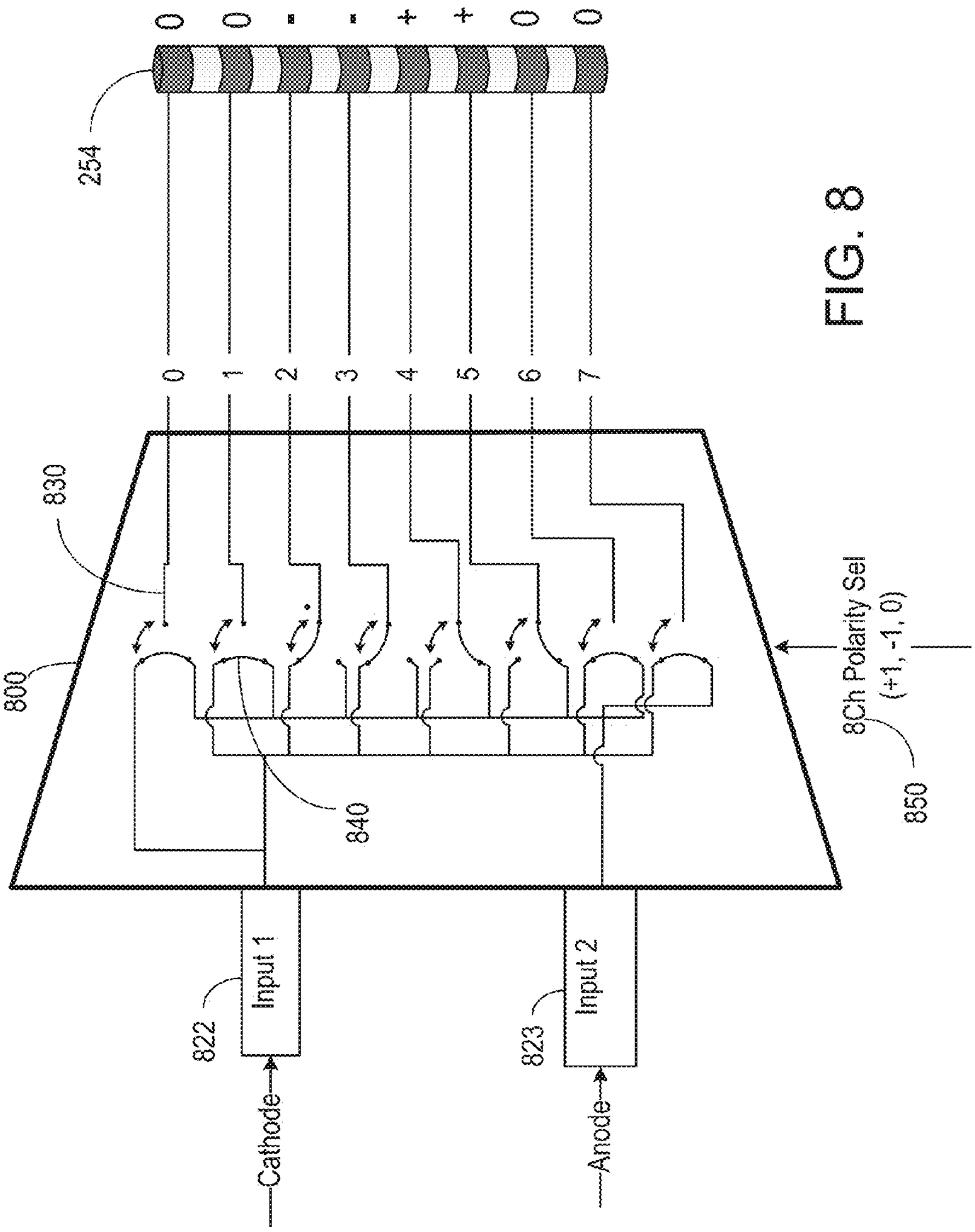
254
0
1
2
3
4
5
6
7
830
800
840
8Ch Polarity Sel
(+1, -1, 0)
850
822
Input 1
Cathode
823
Input 2
Anode

FIG. 8

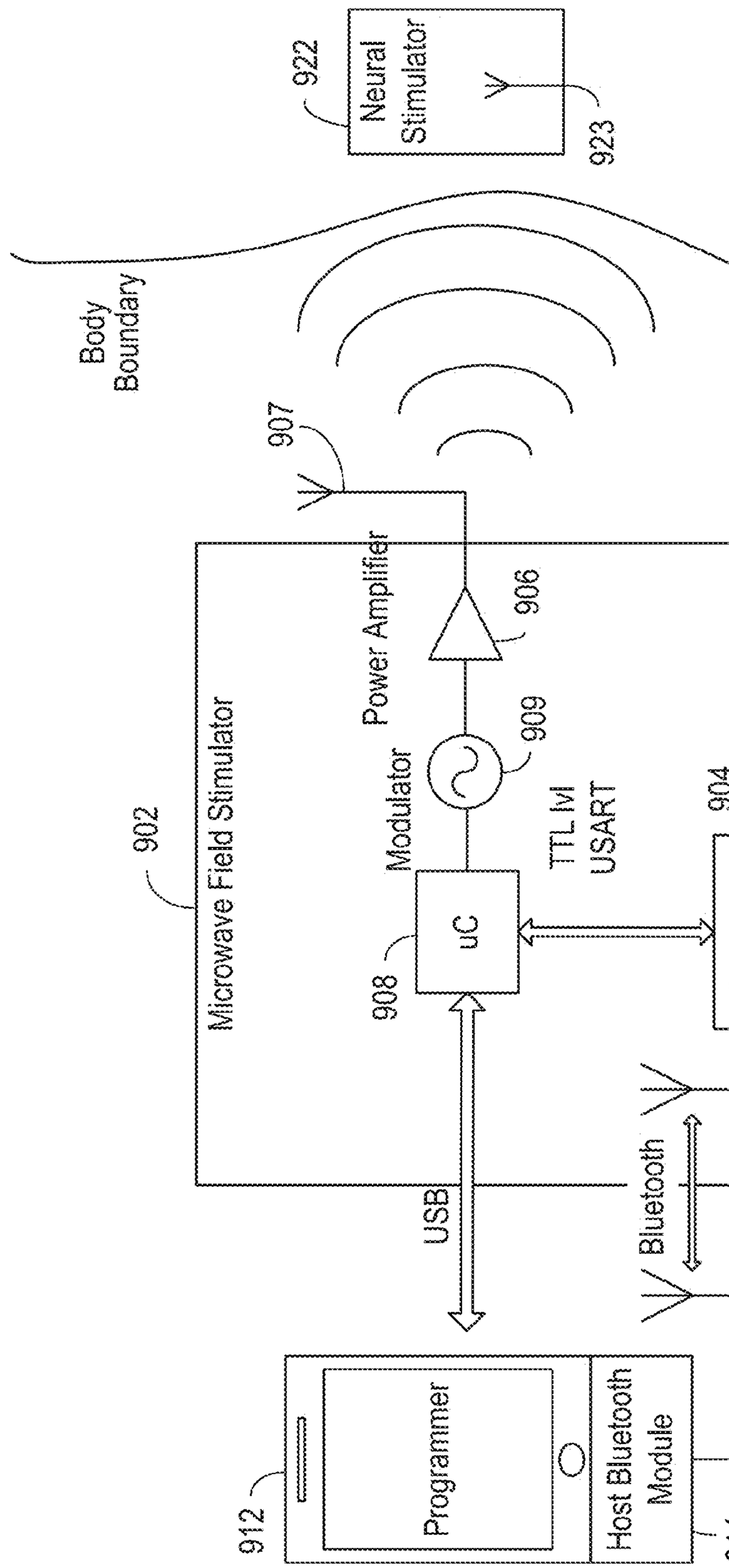
922
Neural Stimulator
923
Body Boundary
907
902
Microwave Field Stimulator
Power Amplifier
906
909
Modulator
TTL lvl USART
904
908
uC
Bluetooth Module
USB
Bluetooth
912
Programmer
Host Bluetooth Module
914

FIG. 9A

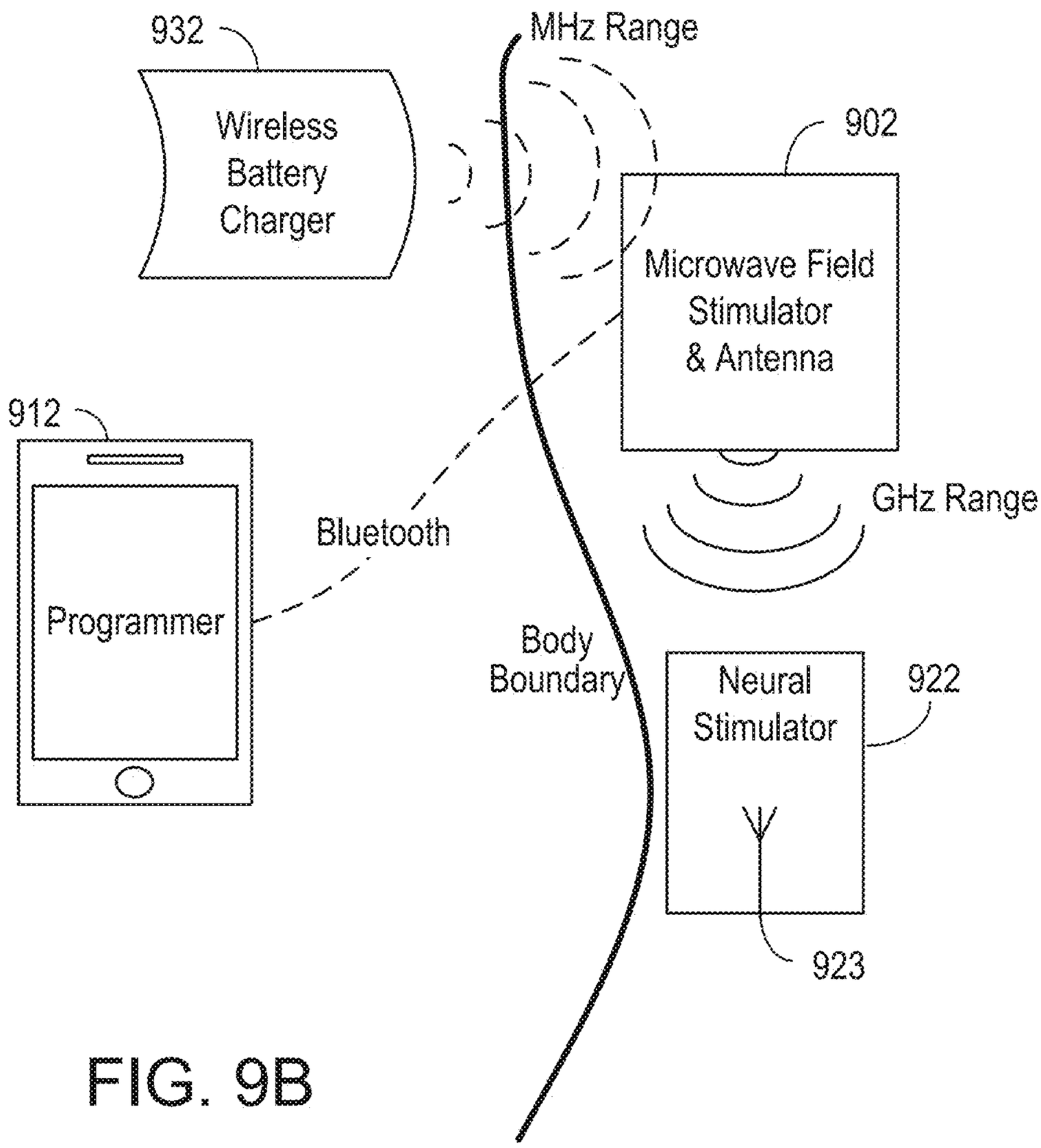
932
Wireless
Battery
Charger
MHz Range
902
Microwave Field
Stimulator
& Antenna
912
Programmer
Bluetooth
GHz Range
Body
Boundary
Neural
Stimulator
922
923

FIG. 9B

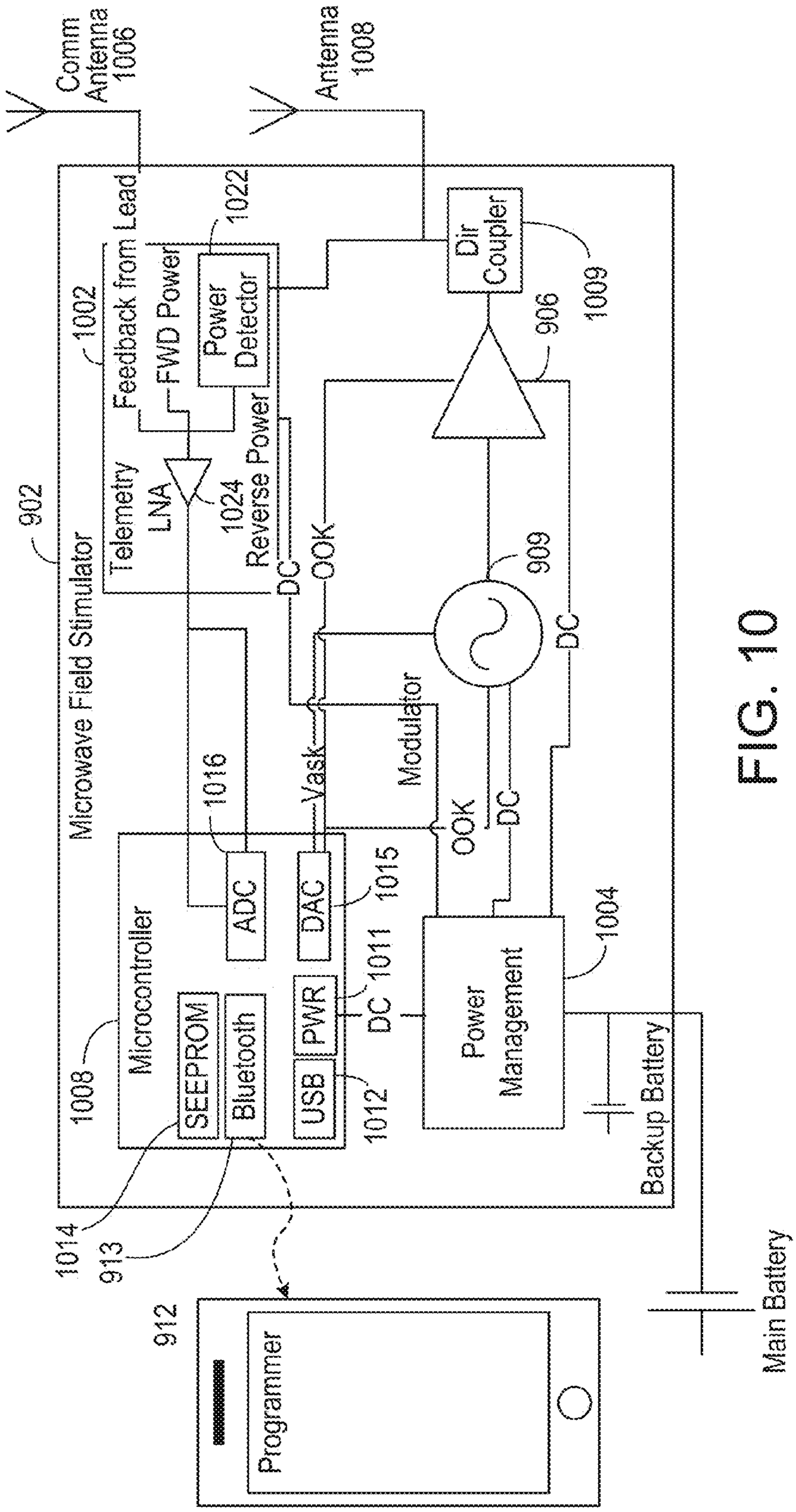
Comm Antenna 1006
Antenna 1008
Microwave Field Stimulator
902
Feedback from Lead
1002
FWD Power
Power Detector
1022
Telemetry
LNA
1024
Reverse Power
Dir Coupler
1009
906
909
DC
OOK
Vask
Modulator
1016
ADC
DAC
1015
Microcontroller
1008
SEEPROM
Bluetooth
PWR
USB
1011
1012
1014
913
Power Management
1004
Backup Battery
Main Battery
912
Programmer

FIG. 10

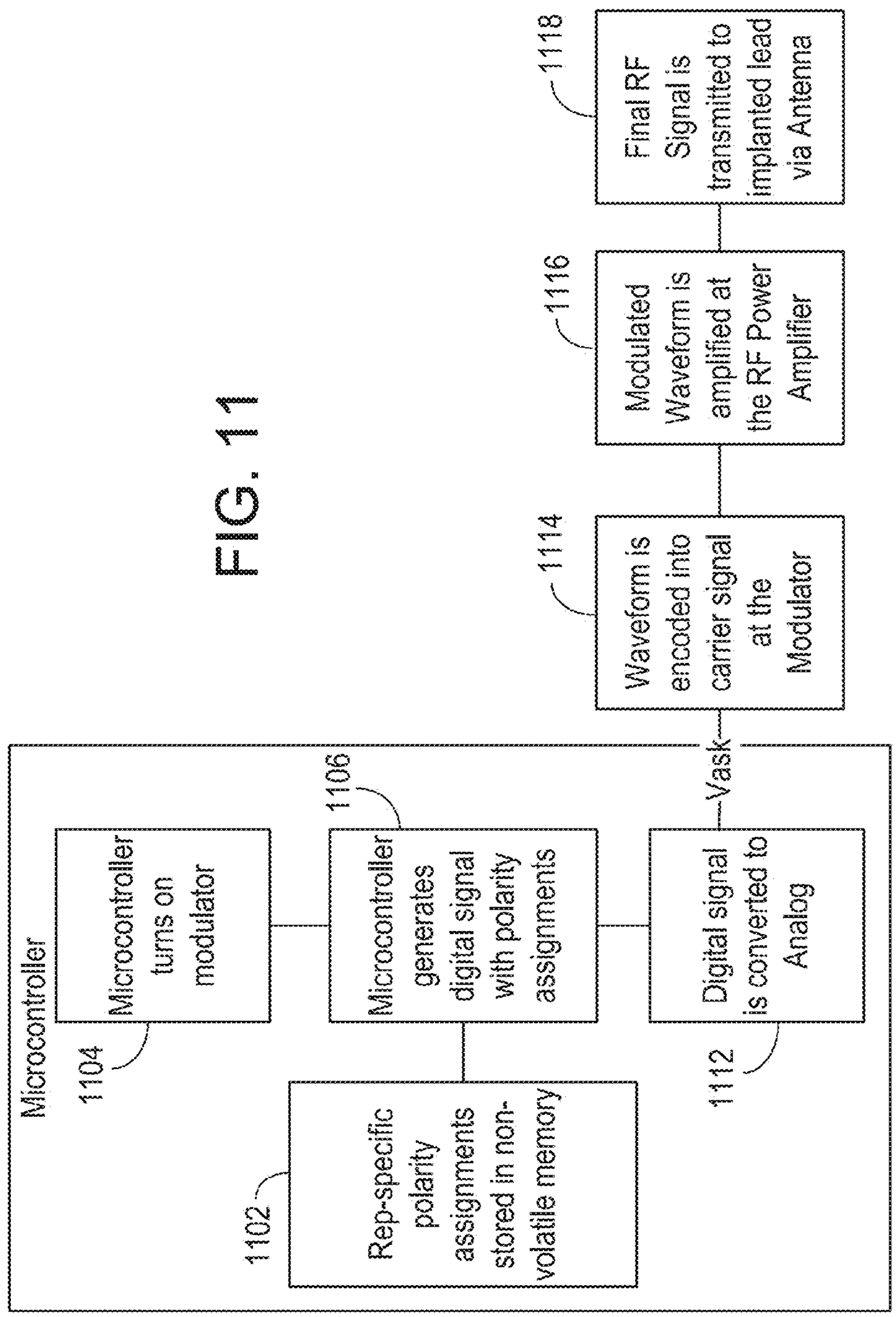
Microcontroller
1104
Microcontroller turns on modulator
1106
Microcontroller generates digital signal with polarity assignments
1102
Rep-specific polarity assignments stored in non-volatile memory
Vask
1112
Digital signal is converted to Analog
1114
Waveform is encoded into carrier signal at the Modulator
1116
Modulated Waveform is amplified at the RF Power Amplifier
1118
Final RF Signal is transmitted to implanted lead via Antenna

FIG. 11

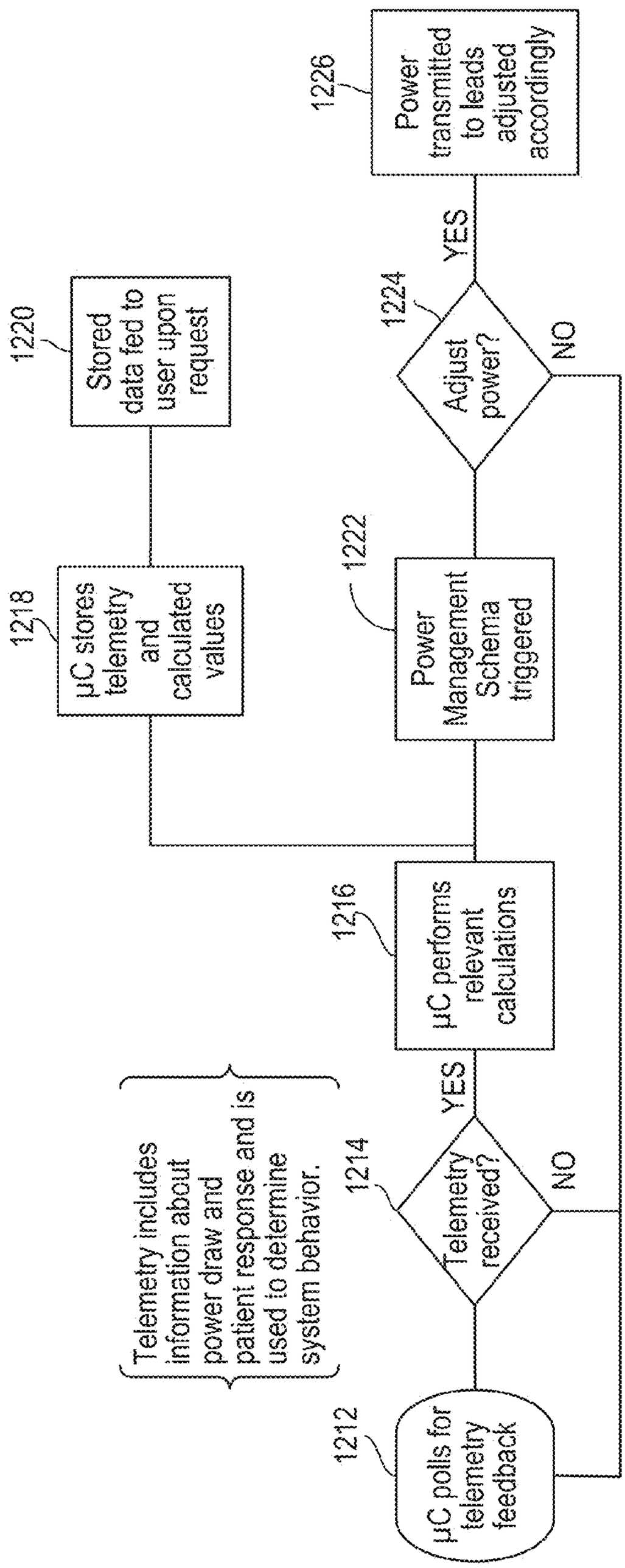
1212
µC polls for telemetry feedback
1214
Telemetry received?
YES
NO
Telemetry includes information about power draw and patient response and is used to determine system behavior.
1216
µC performs relevant calculations
1218
µC stores telemetry and calculated values
1220
Stored data fed to user upon request
1222
Power Management Schema triggered
1224
Adjust power?
YES
NO
1226
Power transmitted to leads adjusted accordingly

FIG. 12

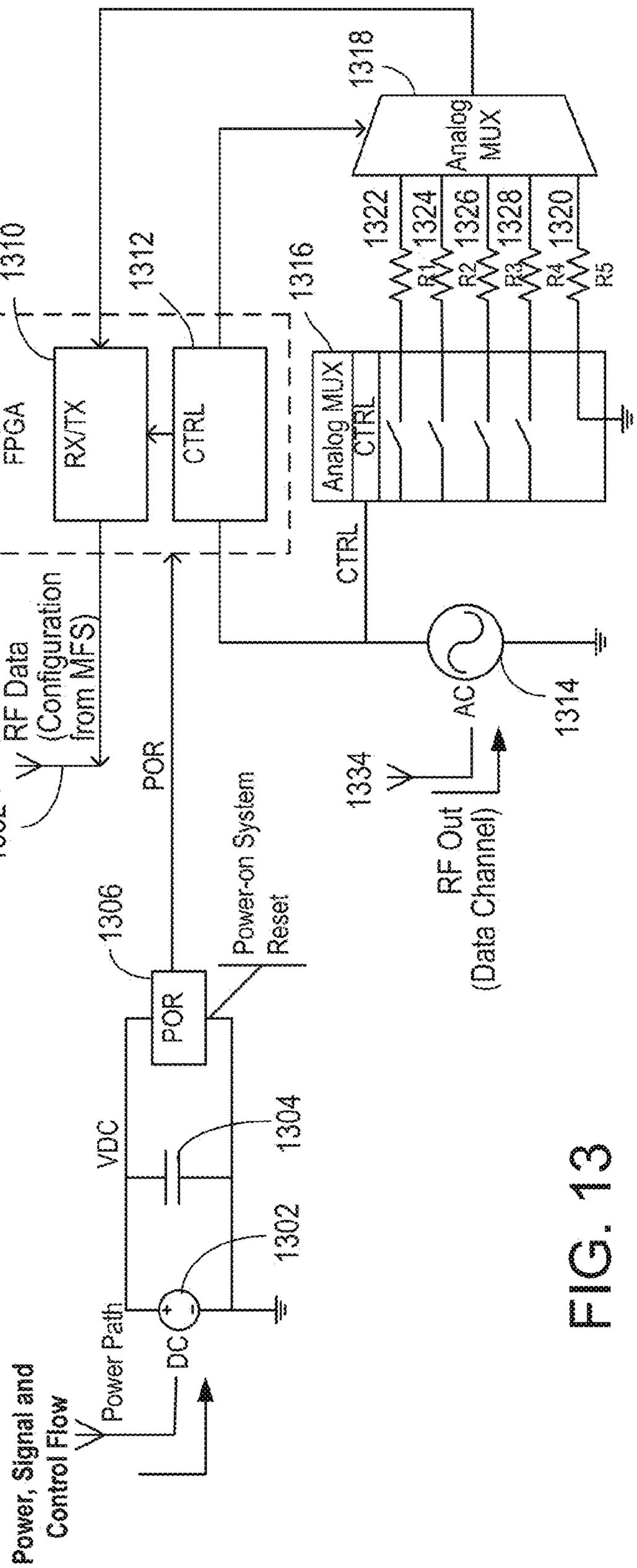
Power, Signal and Control Flow
Power Path
DC
VDC
POR
1306
1302
1304
Power-on System Reset
1332 RF IN
RF Data (Configuration from MFS)
FPGA
1308
RX/TX
CTRL
1310
1312
1316
Analog MUX
CTRL
1318
Analog MUX
1322
1324
1326
1328
1320
R1
R2
R3
R4
R5
CTRL
AC
1314
1334
RF Out (Data Channel)

FIG. 13

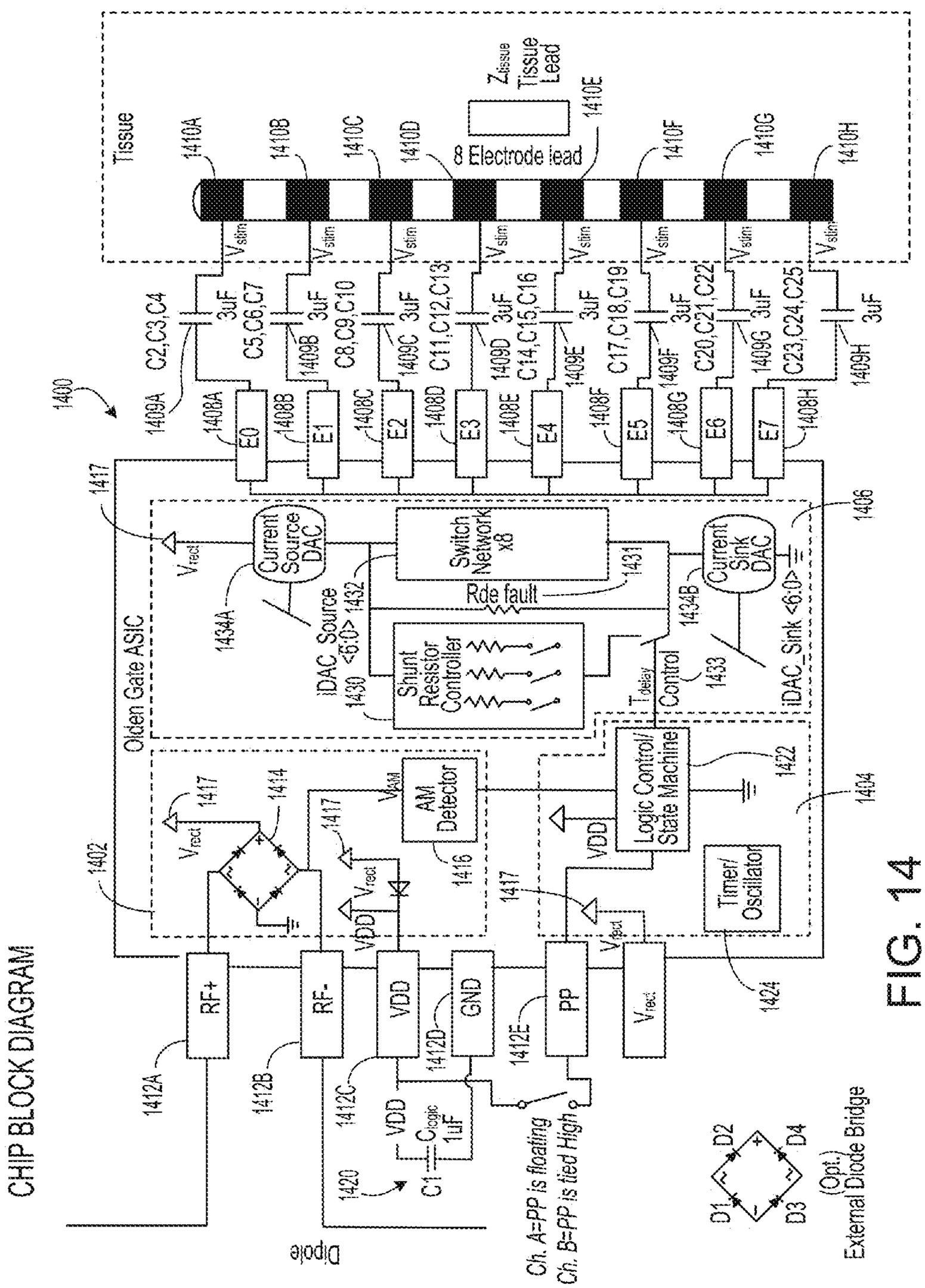
CHIP BLOCK DIAGRAM
1400
Tissue
1410A
1410B
1410C
1410D
8 Electrode lead
1410E
1410F
1410G
1410H
Z_tissue
Tissue Lead
V_stim
1409A C2,C3,C4 3uF
1409B C5,C6,C7 3uF
1409C C8,C9,C10 3uF
1409D C11,C12,C13 3uF
1409E C14,C15,C16 3uF
1409F C17,C18,C19 3uF
1409G C20,C21,C22 3uF
1409H C23,C24,C25 3uF
1408A E0
1408B E1
1408C E2
1408D E3
1408E E4
1408F E5
1408G E6
1408H E7
1417
Olden Gate ASIC
Current Source DAC
1434A
Switch Network x8
1431
Rde fault
1432
iDAC_Source <6:0>
Shunt Resistor Controller
1430
T_delay
Control
1433
1434B
Current Sink DAC
iDAC_Sink <6:0>
1406
1402
V_rect
1414
AM Detector
1416
V_AM
VDD
Logic Control/ State Machine
1422
1404
Timer/ Oscillator
1424
RF+
RF-
VDD
GND
PP
1412A
1412B
1412C
1412D
1412E
C_logic 1uF
C1
1420
Dipole
Ch. A=PP is floating
Ch. B=PP is tied High
D1
D2
D3
D4
(Opt.) External Diode Bridge

FIG. 14

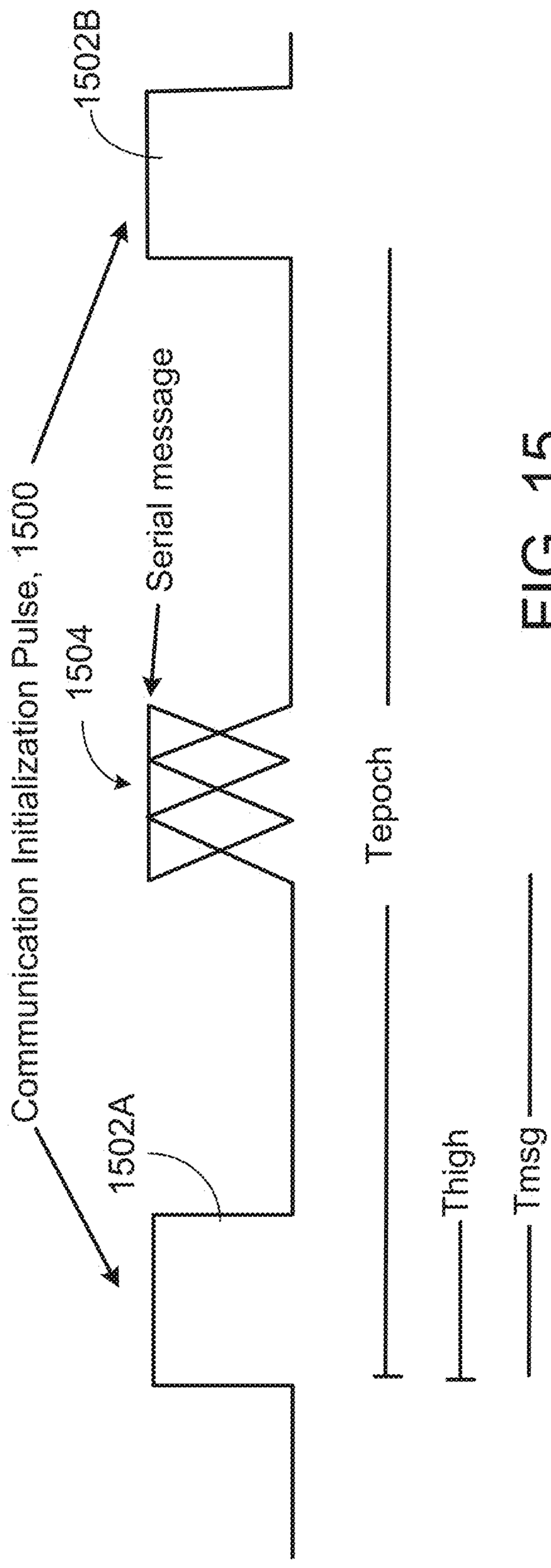
Communication Initialization Pulse, 1500
1502A
1504
Serial message
1502B
Tepoch
Thigh
Tmsg

FIG. 15

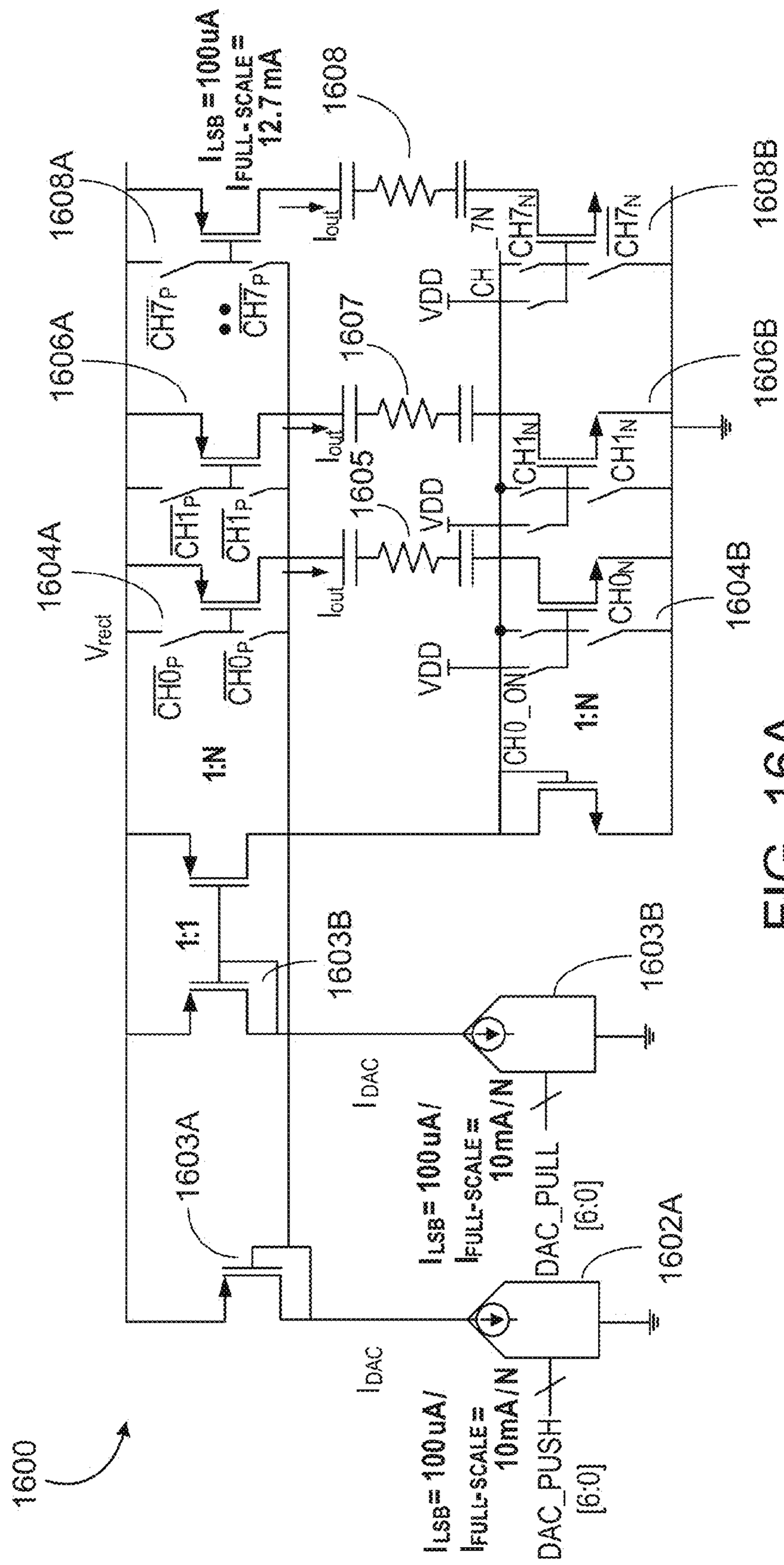
1600
1603A
1603B
1:1
1:N
1604A
1604B
1605
1606A
1606B
1607
1608
1608A
1608B
1602A
I_{LSB} = 100uA
$I_{FULL-SCALE}$ = 12.7 mA
I_{LSB} = 100uA/
$I_{FULL-SCALE}$ = 10mA/N
I_{DAC}
I_{out}
V_{rect}
VDD
DAC_PUSH [6:0]
DAC_PULL [6:0]
CH0_ON
$\overline{CH0_P}$
$CH0_N$
$\overline{CH1_P}$
$CH1_N$
$\overline{CH7_P}$
$CH7_N$

FIG. 16A

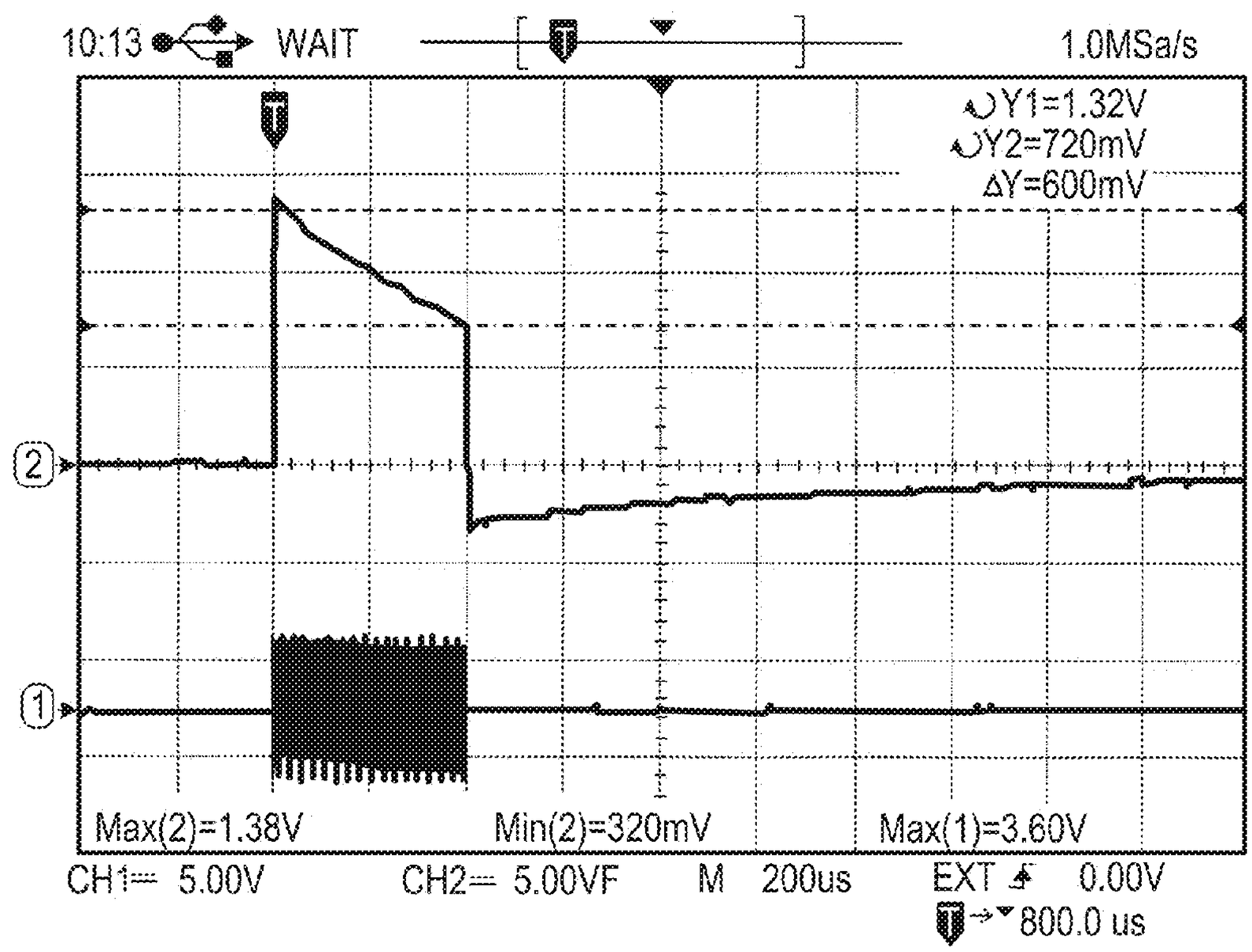
10:13
WAIT
1.0MSa/s
Y1=1.32V
Y2=720mV
ΔY=600mV
2
1
Max(2)=1.38V
Min(2)=320mV
Max(1)=3.60V
CH1= 5.00V
CH2= 5.00VF
M 200us
EXT 0.00V
800.0 us

FIG. 16B

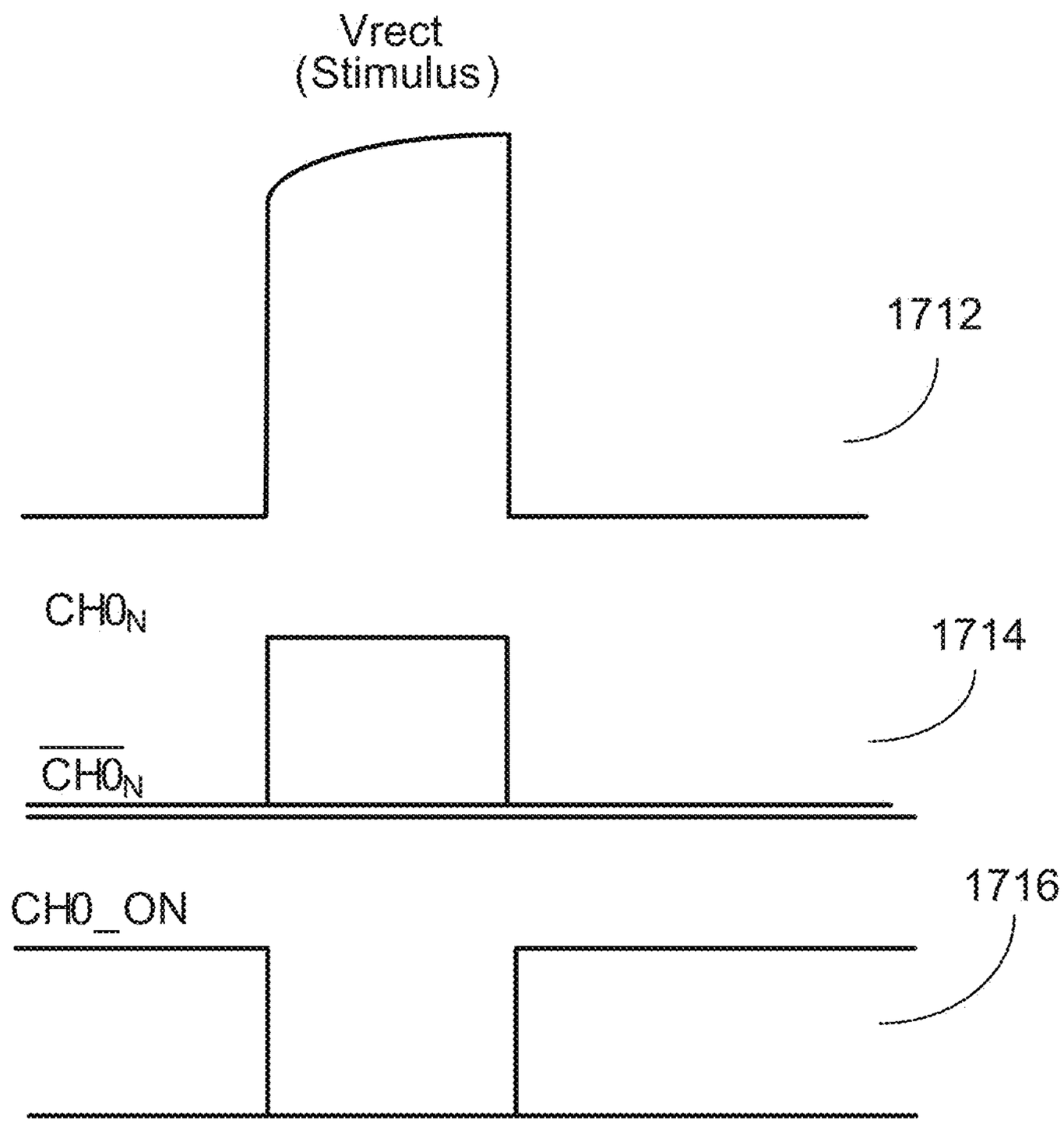

FIG. 17

CIRCUIT FOR AN IMPLANTABLE DEVICE

RELATED APPLICATIONS

This application claims benefit of U.S. Provisional Application 62/022,768, filed Jul. 10, 2014, the contents of which are incorporated herein in entirety.

TECHNICAL FIELD

This application relates generally to implantable stimulators.

BACKGROUND

Modulation of excitable tissue in the body by electrical stimulation has become an important type of therapy for patients with chronic disabling conditions, including chronic pain, problems of movement initiation and control, involuntary movements, vascular insufficiency, heart arrhythmias and more. A variety of therapeutic intra-body electrical stimulation techniques can treat these conditions. For instance, devices may be used to deliver stimulatory signals to excitable tissue, record vital signs, perform pacing or defibrillation operations, record action potential activity from targeted tissue, control drug release from time-release capsules or drug pump units, or interface with the auditory system to assist with hearing. Typically, such devices utilize a subcutaneous battery operated implantable pulse generator (IPG) to provide power or other charge storage mechanisms.

SUMMARY

In one aspect, some implementations provide an integrated circuit for an implantable wirelessly powered device for implantation in a patient's body, the circuit including: a radio-frequency (RF) to direct current (DC) rectifying circuit coupled to one or more antenna on the implantable wirelessly powered device, the rectifying circuit configured to: rectify an input RF signal received at the one or more antennas and from an external controller through electric radiative coupling; and extract DC electric power and configuration data from the input RF signal; a driving circuit coupled to one or more electrode and configured to: steer a stimulating current to each electrode according to the extracted configuration data to modulate the neural tissue within the patient's body; and a logic control circuit connected to the rectifying circuit and the a driving circuit, the logic control circuit configured to: generate a current for the driving circuit solely using the extracted DC electrical power; in accordance with the extracted configuration data, set polarity state information for each electrode; and a driving circuit coupled to one or more electrode, the driving circuit comprising current mirrors and being configured to: steer, to each electrode and via the current mirrors, a stimulating current solely from the generated current to modulate neural tissue within the patient's body.

Implementations may include one or more of the following features. The driving circuit may include: a current source digital to analog circuit (DAC) and a current sink digital to analog circuit (DAC), the current source DAC and the current sink DAC being complementary to each other and both being mirrored connected to each electrode via the current mirrors wherein the stimulating current may be determined by a current mirror ratio and wherein the configuration data may include the current mirror ratio. The current mirror ratio may equal matches the number of electrodes.

The driving circuit may include: a switch bank configured to control a polarity state for each electrode. The driving circuit may include: a variable shunt resistor adapted to reduce a ripple on the electrode connected thereto when the stimulating current has just ended.

The integrated circuit may further include: a discharge delay timer to delay the onset of capacitors coupled to each of the electrodes.

The integrated circuit may further include: a power on reset (PoR) circuit to maintain default state information for each electrode and default parameters for the stimulating current for each electrode, the PoR circuit configured to be trigged on by a rising edge and turned off by a falling edge.

The integrated circuit may further include: one or more address control bits, configurable as a logic address of the implantable device wirelessly powered by the extracted electric power. The integrated circuit may further include a diode bridge.

The rectifying circuit may be coupled to a differential antenna on the implantable wirelessly powered device. The rectifying circuit may include: an amplitude modulation (AM) detection circuit to extract electric power and configuration data from the input signal.

The logic control circuit may include: a state machine to record state information for each electrode based on the extracted configuration data, the configuration data including polarity setting for each electrode. The logic control circuit may be further configured to set polarity state for each electrode during a communication initialization pulse. The logic control circuit may include a timer circuit to control a duration the generated current for the driving circuit.

BRIEF DESCRIPTION OF THE DRAWINGS

FIG. **1** depicts a high-level diagram of an example of a wireless stimulation system.

FIG. **2** depicts a detailed diagram of an example of the wireless stimulation system.

FIG. **3** is a flowchart showing an example of the operation of the wireless stimulation system.

FIG. **4** is a circuit diagram showing an example of a wireless implantable stimulator device.

FIG. **5** is a circuit diagram of another example of a wireless implantable stimulator device.

FIG. **6** is a block diagram showing an example of control and feedback functions of a wireless implantable stimulator device.

FIG. **7** is a schematic showing an example of a wireless implantable stimulator device with components to implement control and feedback functions.

FIG. **8** is a schematic of an example of a polarity routing switch network.

FIG. **9**A is a diagram of an example microwave field stimulator (MFS) operating along with a wireless implantable stimulator device.

FIG. **9**B is a diagram of another example MFS operating along with a wireless implantable stimulator device.

FIG. **10** is a detailed diagram of an example MFS.

FIG. **11** is a flowchart showing an example process in which the MFS transmits polarity setting information to the wireless implantable stimulator device.

FIG. **12** is another flow chart showing an example process in which the MFS receives and processes the telemetry feedback signal to make adjustments to subsequent transmissions.

FIG. **13** is a schematic of an example implementation of power, signal and control flow on the wireless implantable stimulator device.

FIG. **14** is a diagram of an example application-specific integrated circuit (ASIC) chip for implantable use.

FIG. **15** shows an example sequence during operation of the ASIC chip shown in FIG. **14**.

FIG. **16**A shows an example current steering feature for the ASIC chip shown in FIG. **14**.

FIG. **16**B shows example waveforms simulated based on the depicted ASIC chip model.

FIG. **17** shows example waveforms at various points in an ASIC chip with the current steering feature.

Like reference symbols in the various drawings indicate like elements.

DETAILED DESCRIPTION

In various implementations, systems and methods are disclosed for applying one or more electrical impulses to targeted excitable tissue, such as nerves, for treating chronic pain, inflammation, arthritis, sleep apnea, seizures, incontinence, pain associated with cancer, incontinence, problems of movement initiation and control, involuntary movements, vascular insufficiency, heart arrhythmias, obesity, diabetes, craniofacial pain, such as migraines or cluster headaches, and other disorders. In certain embodiments, a device may be used to send electrical energy to targeted nerve tissue by using remote radio frequency (RF) energy without cables or inductive coupling to power a passive implanted wireless stimulator device. The targeted nerves can include, but are not limited to, the spinal cord and surrounding areas, including the dorsal horn, dorsal root ganglion, the exiting nerve roots, nerve ganglions, the dorsal column fibers and the peripheral nerve bundles leaving the dorsal column and brain, such as the vagus, occipital, trigeminal, hypoglossal, sacral, coccygeal nerves and the like.

A wireless stimulation system can include an implantable stimulator device with one or more electrodes and one or more conductive antennas (for example, dipole or patch antennas), and internal circuitry for frequency waveform and electrical energy rectification. The system may further comprise an external controller and antenna for transmitting radio frequency or microwave energy from an external source to the implantable stimulator device with neither cables nor inductive coupling to provide power.

In various implementations, the wireless implantable stimulator device is powered wirelessly (and therefore does not require a wired connection) and contains the circuitry necessary to receive the pulse instructions from a source external to the body. For example, various embodiments employ internal dipole (or other) antenna configuration(s) to receive RF power through electrical radiative coupling. This allows such devices to produce electrical currents capable of stimulating nerve bundles without a physical connection to an implantable pulse generator (IPG) or use of an inductive coil.

According to some implementations, the wireless implantable stimulator device includes an application-specific integrated circuit (ASIC) chip for interacting with an external controller and the electrodes contained within the device. The ASIC chip may harvest RF power from the received input signal sent from the external controller to power the wireless implantable stimulator device, including the ASIC chip. The ASIC chip may also extract waveform parameters from the received input signal and use such information to create electrical impulses for stimulating excitable tissues through the electrodes. In particular, the ASIC chip contains a current steering feature to mirror currents to each electrode with evenness while maintaining a compact chip size. Moreover, the ASIC chip may extract polarity setting information from the received input signal and use such information to set the polarity for electrode interfaces.

Further descriptions of exemplary wireless systems for providing neural stimulation to a patient can be found in commonly-assigned, co-pending published PCT applications PCT/US2012/23029 filed Jan. 28, 2011, PCT/US2012/32200 filed Apr. 11, 2011, PCT/US2012/48903, filed Jan. 28, 2011, PCT/US2012/50633, filed Aug. 12, 2011 and PCT/US2012/55746, filed Sep. 15, 2011, the complete disclosures of which are incorporated by reference.

FIG. **1** depicts a high-level diagram of an example of a wireless stimulation system. The wireless stimulation system may include four major components, namely, a programmer module **102**, a RF pulse generator module **106**, a transmit (TX) antenna **110** (for example, a patch antenna, slot antenna, or a dipole antenna), and an implanted wireless stimulator device **114**. The programmer module **102** may be a computer device, such as a smart phone, running a software application that supports a wireless connection **104**, such as Bluetooth®. The application can enable the user to view the system status and diagnostics, change various parameters, increase/decrease the desired stimulus amplitude of the electrode pulses, and adjust feedback sensitivity of the RF pulse generator module **106**, among other functions.

The RF pulse generator module **106** may include communication electronics that support the wireless connection **104**, the stimulation circuitry, and the battery to power the generator electronics. In some implementations, the RF pulse generator module **106** includes the TX antenna embedded into its packaging form factor while, in other implementations, the TX antenna is connected to the RF pulse generator module **106** through a wired connection **108** or a wireless connection (not shown). The TX antenna **110** may be coupled directly to tissue to create an electric field that powers the implanted wireless stimulator device **114**. The TX antenna **110** communicates with the implanted wireless stimulator device **114** through an RF interface. For instance, the TX antenna **110** radiates an RF transmission signal that is modulated and encoded by the RF pulse generator module **110**. The implanted wireless stimulator device of module **114** contains one or more antennas, such as dipole antenna(s), to receive and transmit through RF interface **112**. In particular, the coupling mechanism between antenna **110** and the one or more antennas on the implanted wireless stimulation device of module **114** utilizes electrical radiative coupling and not inductive coupling. In other words, the coupling is through an electric field rather than a magnetic field.

Through this electrical radiative coupling, the TX antenna **110** can provide an input signal to the implanted wireless stimulator device **114**. This input signal contains energy and may contain information encoding stimulus waveforms to be applied at the electrodes of the implanted wireless stimulator device **114**. In some implementations, the power level of this input signal directly determines an applied amplitude (for example, power, current, or voltage) of the one or more electrical pulses created using the electrical energy con-

tained in the input signal. Within the implanted wireless stimulator device **114** are components for demodulating the RF transmission signal, and electrodes to deliver the stimulation to surrounding neuronal tissue.

The RF pulse generator module **106** can be implanted subcutaneously, or it can be worn external to the body. When external to the body, the RF generator module **106** can be incorporated into a belt or harness design to allow for electric radiative coupling through the skin and underlying tissue to transfer power and/or control parameters to the implanted wireless stimulator device **114**. In either event, receiver circuit(s) internal to the wireless stimulator device **114** (or cylindrical wireless implantable stimulator device **1400** shown in FIGS. **14**A and **14**B, helical wireless implantable stimulator device **1900** shown in FIGS. **19**A to **19**C) can capture the energy radiated by the TX antenna **110** and convert this energy to an electrical waveform. The receiver circuit(s) may further modify the waveform to create an electrical pulse suitable for the stimulation of neural tissue.

In some implementations, the RF pulse generator module **106** can remotely control the stimulus parameters (that is, the parameters of the electrical pulses applied to the neural tissue) and monitor feedback from the wireless stimulator device **114** based on RF signals received from the implanted wireless stimulator device **114**. A feedback detection algorithm implemented by the RF pulse generator module **106** can monitor data sent wirelessly from the implanted wireless stimulator device **114**, including information about the energy that the implanted wireless stimulator device **114** is receiving from the RF pulse generator and information about the stimulus waveform being delivered to the electrode pads. In order to provide an effective therapy for a given medical condition, the system can be tuned to provide the optimal amount of excitation or inhibition to the nerve fibers by electrical stimulation. A closed loop feedback control method can be used in which the output signals from the implanted wireless stimulator device **114** are monitored and used to determine the appropriate level of neural stimulation current for maintaining effective neuronal activation, or, in some cases, the patient can manually adjust the output signals in an open loop control method.

FIG. **2** depicts a detailed diagram of an example of the wireless stimulation system. As depicted, the programming module **102** may comprise user input system **202** and communication subsystem **208**. The user input system **221** may allow various parameter settings to be adjusted (in some cases, in an open loop fashion) by the user in the form of instruction sets. The communication subsystem **208** may transmit these instruction sets (and other information) via the wireless connection **104**, such as Bluetooth or Wi-Fi, to the RF pulse generator module **106**, as well as receive data from module **106**.

For instance, the programmer module **102**, which can be utilized for multiple users, such as a patient's control unit or clinician's programmer unit, can be used to send stimulation parameters to the RF pulse generator module **106**. The stimulation parameters that can be controlled may include pulse amplitude, pulse frequency, and pulse width in the ranges shown in Table 1. In this context the term pulse refers to the phase of the waveform that directly produces stimulation of the tissue; the parameters of the charge-balancing phase (described below) can similarly be controlled. The patient and/or the clinician can also optionally control overall duration and pattern of treatment.

TABLE 1

Stimulation Parameter	
Pulse Amplitude:	0 to 20 mA
Pulse Frequency:	0 to 10000 Hz
Pulse Width:	0 to 2 ms

The RF pulse generator module **106** may be initially programmed to meet the specific parameter settings for each individual patient during the initial implantation procedure. Because medical conditions or the body itself can change over time, the ability to re-adjust the parameter settings may be beneficial to ensure ongoing efficacy of the neural modulation therapy.

The programmer module **102** may be functionally a smart device and associated application. The smart device hardware may include a CPU **206** and be used as a vehicle to handle touchscreen input on a graphical user interface (GUI) **204**, for processing and storing data.

The RF pulse generator module **106** may be connected via wired connection **108** to an external TX antenna **110**. Alternatively, both the antenna and the RF pulse generator are located subcutaneously (not shown).

The signals sent by RF pulse generator module **106** to the implanted wireless stimulator device **114** may include both power and parameter-setting attributes in regards to stimulus waveform, amplitude, pulse width, and frequency. The RF pulse generator module **106** can also function as a wireless receiving unit that receives feedback signals from the implanted wireless stimulator device **114**. To that end, the RF pulse generator module **106** may contain microelectronics or other circuitry to handle the generation of the signals transmitted to the device **114** as well as handle feedback signals, such as those from the stimulator device **114**. For example, the RF pulse generator module **106** may comprise controller subsystem **214**, high-frequency oscillator **218**, RF amplifier **216**, a RF switch, and a feedback subsystem **212**.

The controller subsystem **214** may include a CPU **230** to handle data processing, a memory subsystem **228** such as a local memory, communication subsystem **234** to communicate with programmer module **102** (including receiving stimulation parameters from programmer module), pulse generator circuitry **236**, and digital/analog (D/A) converters **232**.

The controller subsystem **214** may be used by the patient and/or the clinician to control the stimulation parameter settings (for example, by controlling the parameters of the signal sent from RF pulse generator module **106** to the stimulator device **114**). These parameter settings can affect, for example, the power, current level, or shape of the one or more electrical pulses. The programming of the stimulation parameters can be performed using the programming module **102**, as described above, to set the repetition rate, pulse width, amplitude, and waveform that will be transmitted by RF energy to the receiving (RX) antenna **238**, typically a dipole antenna (although other types may be used), in the implanted wireless stimulation device **214**. The clinician may have the option of locking and/or hiding certain settings within the programmer interface, thus limiting the patient's ability to view or adjust certain parameters because adjustment of certain parameters may require detailed medical knowledge of neurophysiology, neuroanatomy, protocols for neural modulation, and safety limits of electrical stimulation.

The controller subsystem **214** may store received parameter settings in the local memory subsystem **228**, until the

parameter settings are modified by new input data received from the programming module **102**. The CPU **206** may use the parameters stored in the local memory to control the pulse generator circuitry **236** to generate a stimulus waveform that is modulated by a high frequency oscillator **218** in the range from 300 MHz to 8 GHz (preferably between about 700 MHz and 5.8 GHz and more preferably between about 800 MHz and 1.3 GHz). The resulting RF signal may then be amplified by RF amplifier **226** and then sent through an RF switch **223** to the TX antenna **110** to reach through depths of tissue to the RX antenna **238**.

In some implementations, the RF signal sent by TX antenna **110** may simply be a power transmission signal used by the wireless stimulation device module **114** to generate electric pulses. In other implementations, a telemetry signal may also be transmitted to the wireless stimulator device **114** to send instructions about the various operations of the wireless stimulator device **114**. The telemetry signal may be sent by the modulation of the carrier signal (through the skin if external, or through other body tissues if the pulse generator module **106** is implanted subcutaneously). The telemetry signal is used to modulate the carrier signal (a high frequency signal) that is coupled onto the implanted antenna(s) **238** and does not interfere with the input received on the same stimulator device to power the device. In one embodiment the telemetry signal and powering signal are combined into one signal, where the RF telemetry signal is used to modulate the RF powering signal, and thus the wireless stimulation device is powered directly by the received telemetry signal; separate subsystems in the wireless stimulation device harness the power contained in the signal and interpret the data content of the signal.

The RF switch **223** may be a multipurpose device such as a dual directional coupler, which passes the relatively high amplitude, extremely short duration RF pulse to the TX antenna **110** with minimal insertion loss while simultaneously providing two low-level outputs to feedback subsystem **212**; one output delivers a forward power signal to the feedback subsystem **212**, where the forward power signal is an attenuated version of the RF pulse sent to the TX antenna **110**, and the other output delivers a reverse power signal to a different port of the feedback subsystem **212**, where reverse power is an attenuated version of the reflected RF energy from the TX Antenna **110**.

During the on-cycle time (when an RF signal is being transmitted to wireless stimulator device **114**), the RF switch **223** is set to send the forward power signal to feedback subsystem. During the off-cycle time (when an RF signal is not being transmitted to the wireless stimulator device **114**), the RF switch **223** can change to a receiving mode in which the reflected RF energy and/or RF signals from the wireless stimulator device **114** are received to be analyzed in the feedback subsystem **212**.

The feedback subsystem **212** of the RF pulse generator module **106** may include reception circuitry to receive and extract telemetry or other feedback signals from the wireless stimulator device **114** and/or reflected RF energy from the signal sent by TX antenna **110**. The feedback subsystem may include an amplifier **226**, a filter **224**, a demodulator **222**, and an A/D converter **220**.

The feedback subsystem **212** receives the forward power signal and converts this high-frequency AC signal to a DC level that can be sampled and sent to the controller subsystem **214**. In this way the characteristics of the generated RF pulse can be compared to a reference signal within the controller subsystem **214**. If a disparity (error) exists in any parameter, the controller subsystem **214** can adjust the output to the RF pulse generator **106**. The nature of the adjustment can be, for example, proportional to the computed error. The controller subsystem **214** can incorporate additional inputs and limits on its adjustment scheme such as the signal amplitude of the reverse power and any predetermined maximum or minimum values for various pulse parameters.

The reverse power signal can be used to detect fault conditions in the RF-power delivery system. In an ideal condition, when TX antenna **110** has perfectly matched impedance to the tissue that it contacts, the electromagnetic waves generated from the RF pulse generator **106** pass unimpeded from the TX antenna **110** into the body tissue. However, in real-world applications a large degree of variability may exist in the body types of users, types of clothing worn, and positioning of the antenna **110** relative to the body surface. Since the impedance of the antenna **110** depends on the relative permittivity of the underlying tissue and any intervening materials, and also depends on the overall separation distance of the antenna from the skin, in any given application there can be an impedance mismatch at the interface of the TX antenna **110** with the body surface. When such a mismatch occurs, the electromagnetic waves sent from the RF pulse generator **106** are partially reflected at this interface, and this reflected energy propagates backward through the antenna feed.

The dual directional coupler RF switch **223** may prevent the reflected RF energy propagating back into the amplifier **226**, and may attenuate this reflected RF signal and send the attenuated signal as the reverse power signal to the feedback subsystem **212**. The feedback subsystem **212** can convert this high-frequency AC signal to a DC level that can be sampled and sent to the controller subsystem **214**. The controller subsystem **214** can then calculate the ratio of the amplitude of the reverse power signal to the amplitude of the forward power signal. The ratio of the amplitude of reverse power signal to the amplitude level of forward power may indicate severity of the impedance mismatch.

In order to sense impedance mismatch conditions, the controller subsystem **214** can measure the reflected-power ratio in real time, and according to preset thresholds for this measurement, the controller subsystem **214** can modify the level of RF power generated by the RF pulse generator **106**. For example, for a moderate degree of reflected power the course of action can be for the controller subsystem **214** to increase the amplitude of RF power sent to the TX antenna **110**, as would be needed to compensate for slightly non-optimum but acceptable TX antenna coupling to the body. For higher ratios of reflected power, the course of action can be to prevent operation of the RF pulse generator **106** and set a fault code to indicate that the TX antenna **110** has little or no coupling with the body. This type of reflected-power fault condition can also be generated by a poor or broken connection to the TX antenna. In either case, it may be desirable to stop RF transmission when the reflected-power ratio is above a defined threshold, because internally reflected power can lead to unwanted heating of internal components, and this fault condition means the system cannot deliver sufficient power to the implanted wireless stimulation device and thus cannot deliver therapy to the user.

The controller **242** of the wireless stimulator device **114** may transmit informational signals, such as a telemetry signal, through the antenna **238** to communicate with the RF pulse generator module **106** during its receive cycle. For example, the telemetry signal from the wireless stimulator device **114** may be coupled to the modulated signal on the dipole antenna(s) **238**, during the on and off state of the

transistor circuit to enable or disable a waveform that produces the corresponding RF bursts necessary to transmit to the external (or remotely implanted) pulse generator module **106**. The antenna(s) **238** may be connected to electrodes **254** in contact with tissue to provide a return path for the transmitted signal. An A/D (not shown) converter can be used to transfer stored data to a serialized pattern that can be transmitted on the pulse-modulated signal from the internal antenna(s) **238** of the wireless stimulator device **114**.

A telemetry signal from the implanted wireless stimulator device **114** may include stimulus parameters such as the power or the amplitude of the current that is delivered to the tissue from the electrodes. The feedback signal can be transmitted to the RF pulse generator module **116** to indicate the strength of the stimulus at the nerve bundle by means of coupling the signal to the implanted RX antenna **238**, which radiates the telemetry signal to the external (or remotely implanted) RF pulse generator module **106**. The feedback signal can include either or both an analog and digital telemetry pulse modulated carrier signal. Data such as stimulation pulse parameters and measured characteristics of stimulator performance can be stored in an internal memory device within the implanted stimulator device **114**, and sent on the telemetry signal. The frequency of the carrier signal may be in the range of at 300 MHz to 8 GHz (preferably between about 700 MHz and 5.8 GHz and more preferably between about 800 MHz and 1.3 GHz).

In the feedback subsystem **212**, the telemetry signal can be down modulated using demodulator **222** and digitized by being processed through an analog to digital (A/D) converter **220**. The digital telemetry signal may then be routed to a CPU **230** with embedded code, with the option to reprogram, to translate the signal into a corresponding current measurement in the tissue based on the amplitude of the received signal. The CPU **230** of the controller subsystem **214** can compare the reported stimulus parameters to those held in local memory **228** to verify the wireless stimulator device **114** delivered the specified stimuli to tissue. For example, if the wireless stimulation device reports a lower current than was specified, the power level from the RF pulse generator module **106** can be increased so that the implanted wireless stimulator device **114** will have more available power for stimulation. The implanted wireless stimulator device **114** can generate telemetry data in real time, for example, at a rate of 8 Kbits per second. All feedback data received from the implanted stimulator device **114** can be logged against time and sampled to be stored for retrieval to a remote monitoring system accessible by the health care professional for trending and statistical correlations.

The sequence of remotely programmable RF signals received by the internal antenna(s) **238** may be conditioned into waveforms that are controlled within the implantable wireless stimulator device **114** by the control subsystem **242** and routed to the appropriate electrodes **254** that are placed in proximity to the tissue to be stimulated. For instance, the RF signal transmitted from the RF pulse generator module **106** may be received by RX antenna **238** and processed by circuitry, such as waveform conditioning circuitry **240**, within the implanted wireless stimulator device **114** to be converted into electrical pulses applied to the electrodes **254** through electrode interface **252**. In some implementations, the implanted wireless stimulator device **114** contains between two to sixteen electrodes **254**.

The waveform conditioning circuitry **240** may include a rectifier **244**, which rectifies the signal received by the RX antenna **238**. The rectified signal may be fed to the controller **242** for receiving encoded instructions from the RF pulse generator module **106**. The rectifier signal may also be fed to a charge balance component **246** that is configured to create one or more electrical pulses based such that the one or more electrical pulses result in a substantially zero net charge at the one or more electrodes (that is, the pulses are charge balanced). The charge-balanced pulses are passed through the current limiter **248** to the electrode interface **252**, which applies the pulses to the electrodes **254** as appropriate.

The current limiter **248** insures the current level of the pulses applied to the electrodes **254** is not above a threshold current level. In some implementations, an amplitude (for example, current level, voltage level, or power level) of the received RF pulse directly determines the amplitude of the stimulus. In this case, it may be particularly beneficial to include current limiter **248** to prevent excessive current or charge being delivered through the electrodes, although current limiter **248** may be used in other implementations where this is not the case. Generally, for a given electrode having several square millimeters surface area, it is the charge per phase that should be limited for safety (where the charge delivered by a stimulus phase is the integral of the current). But, in some cases, the limit can instead be placed on the current, where the maximum current multiplied by the maximum possible pulse duration is less than or equal to the maximum safe charge. More generally, the limiter **248** acts as a charge limiter that limits a characteristic (for example, current or duration) of the electrical pulses so that the charge per phase remains below a threshold level (typically, a safe-charge limit).

In the event the implanted wireless stimulator device **114** receives a "strong" pulse of RF power sufficient to generate a stimulus that would exceed the predetermined safe-charge limit, the current limiter **248** can automatically limit or "clip" the stimulus phase to maintain the total charge of the phase within the safety limit. The current limiter **248** may be a passive current limiting component that cuts the signal to the electrodes **254** once the safe current limit (the threshold current level) is reached. Alternatively, or additionally, the current limiter **248** may communicate with the electrode interface **252** to turn off all electrodes **254** to prevent tissue damaging current levels.

A clipping event may trigger a current limiter feedback control mode. The action of clipping may cause the controller to send a threshold power data signal to the pulse generator **106**. The feedback subsystem **212** detects the threshold power signal and demodulates the signal into data that is communicated to the controller subsystem **214**. The controller subsystem **214** algorithms may act on this current-limiting condition by specifically reducing the RF power generated by the RF pulse generator, or cutting the power completely. In this way, the pulse generator **106** can reduce the RF power delivered to the body if the implanted wireless stimulator device **114** reports it is receiving excess RF power.

The controller **250** of the stimulator **205** may communicate with the electrode interface **252** to control various aspects of the electrode setup and pulses applied to the electrodes **254**. The electrode interface **252** may act as a multiplex and control the polarity and switching of each of the electrodes **254**. For instance, in some implementations, the wireless stimulator **106** has multiple electrodes **254** in contact with tissue, and for a given stimulus the RF pulse generator module **106** can arbitrarily assign one or more electrodes to 1) act as a stimulating electrode, 2) act as a

return electrode, or 3) be inactive by communication of assignment sent wirelessly with the parameter instructions, which the controller **250** uses to set electrode interface **252** as appropriate. It may be physiologically advantageous to assign, for example, one or two electrodes as stimulating electrodes and to assign all remaining electrodes as return electrodes.

Also, in some implementations, for a given stimulus pulse, the controller **250** may control the electrode interface **252** to divide the current arbitrarily (or according to instructions from pulse generator module **106**) among the designated stimulating electrodes. This control over electrode assignment and current control can be advantageous because in practice the electrodes **254** may be spatially distributed along various neural structures, and through strategic selection of the stimulating electrode location and the proportion of current specified for each location, the aggregate current distribution in tissue can be modified to selectively activate specific neural targets. This strategy of current steering can improve the therapeutic effect for the patient.

In another implementation, the time course of stimuli may be arbitrarily manipulated. A given stimulus waveform may be initiated at a time T_start and terminated at a time T_final, and this time course may be synchronized across all stimulating and return electrodes; further, the frequency of repetition of this stimulus cycle may be synchronous for all the electrodes. However, controller **250**, on its own or in response to instructions from pulse generator **106**, can control electrode interface **252** to designate one or more subsets of electrodes to deliver stimulus waveforms with non-synchronous start and stop times, and the frequency of repetition of each stimulus cycle can be arbitrarily and independently specified.

For example, a stimulator having eight electrodes may be configured to have a subset of five electrodes, called set A, and a subset of three electrodes, called set B. Set A might be configured to use two of its electrodes as stimulating electrodes, with the remainder being return electrodes. Set B might be configured to have just one stimulating electrode. The controller **250** could then specify that set A deliver a stimulus phase with 3 mA current for a duration of 200 us followed by a 400 us charge-balancing phase. This stimulus cycle could be specified to repeat at a rate of 60 cycles per second. Then, for set B, the controller **250** could specify a stimulus phase with 1 mA current for duration of 500 us followed by a 800 us charge-balancing phase. The repetition rate for the set-B stimulus cycle can be set independently of set A, say for example it could be specified at 25 cycles per second. Or, if the controller **250** was configured to match the repetition rate for set B to that of set A, for such a case the controller **250** can specify the relative start times of the stimulus cycles to be coincident in time or to be arbitrarily offset from one another by some delay interval.

In some implementations, the controller **250** can arbitrarily shape the stimulus waveform amplitude, and may do so in response to instructions from pulse generator **106**. The stimulus phase may be delivered by a constant-current source or a constant-voltage source, and this type of control may generate characteristic waveforms that are static, e.g. a constant-current source generates a characteristic rectangular pulse in which the current waveform has a very steep rise, a constant amplitude for the duration of the stimulus, and then a very steep return to baseline. Alternatively, or additionally, the controller **250** can increase or decrease the level of current at any time during the stimulus phase and/or during the charge-balancing phase. Thus, in some implementations, the controller **250** can deliver arbitrarily shaped stimulus waveforms such as a triangular pulse, sinusoidal pulse, or Gaussian pulse for example. Similarly, the charge-balancing phase can be arbitrarily amplitude-shaped, and similarly a leading anodic pulse (prior to the stimulus phase) may also be amplitude-shaped.

As described above, the wireless stimulator device **114** may include a charge-balancing component **246**. Generally, for constant current stimulation pulses, pulses should be charge balanced by having the amount of cathodic current should equal the amount of anodic current, which is typically called biphasic stimulation. Charge density is the amount of current times the duration it is applied, and is typically expressed in the units uC/cm^2. In order to avoid the irreversible electrochemical reactions such as pH change, electrode dissolution as well as tissue destruction, no net charge should appear at the electrode-electrolyte interface, and it is generally acceptable to have a charge density less than 30 uC/cm^2. Biphasic stimulating current pulses ensure that no net charge appears at the electrode after each stimulation cycle and the electrochemical processes are balanced to prevent net dc currents. The wireless stimulator device **114** may be designed to ensure that the resulting stimulus waveform has a net zero charge. Charge balanced stimuli are thought to have minimal damaging effects on tissue by reducing or eliminating electrochemical reaction products created at the electrode-tissue interface.

A stimulus pulse may have a negative-voltage or current, called the cathodic phase of the waveform. Stimulating electrodes may have both cathodic and anodic phases at different times during the stimulus cycle. An electrode that delivers a negative current with sufficient amplitude to stimulate adjacent neural tissue is called a "stimulating electrode." During the stimulus phase the stimulating electrode acts as a current sink. One or more additional electrodes act as a current source and these electrodes are called "return electrodes." Return electrodes are placed elsewhere in the tissue at some distance from the stimulating electrodes. When a typical negative stimulus phase is delivered to tissue at the stimulating electrode, the return electrode has a positive stimulus phase. During the subsequent charge-balancing phase, the polarities of each electrode are reversed.

In some implementations, the charge balance component **246** uses a blocking capacitor(s) placed electrically in series with the stimulating electrodes and body tissue, between the point of stimulus generation within the stimulator circuitry and the point of stimulus delivery to tissue. In this manner, a resistor-capacitor (RC) network may be formed. In a multi-electrode stimulator, one charge-balance capacitor(s) may be used for each electrode or a centralized capacitor(s) may be used within the stimulator circuitry prior to the point of electrode selection. The RC network can block direct current (DC), however it can also prevent low-frequency alternating current (AC) from passing to the tissue. The frequency below which the series RC network essentially blocks signals is commonly referred to as the cutoff frequency, and in one embodiment the design of the stimulator system may ensure the cutoff frequency is not above the fundamental frequency of the stimulus waveform. In this embodiment as disclosed herein, the wireless stimulator may have a charge-balance capacitor with a value chosen according to the measured series resistance of the electrodes and the tissue environment in which the stimulator is implanted. By selecting a specific capacitance value the cutoff frequency of the RC network in this embodiment is at or below the fundamental frequency of the stimulus pulse.

In other implementations, the cutoff frequency may be chosen to be at or above the fundamental frequency of the stimulus, and in this scenario the stimulus waveform created prior to the charge-balance capacitor, called the drive waveform, may be designed to be non-stationary, where the envelope of the drive waveform is varied during the duration of the drive pulse. For example, in one embodiment, the initial amplitude of the drive waveform is set at an initial amplitude Vi, and the amplitude is increased during the duration of the pulse until it reaches a final value k*Vi. By changing the amplitude of the drive waveform over time, the shape of the stimulus waveform passed through the charge-balance capacitor is also modified. The shape of the stimulus waveform may be modified in this fashion to create a physiologically advantageous stimulus.

In some implementations, the wireless stimulator device **114** may create a drive-waveform envelope that follows the envelope of the RF pulse received by the receiving dipole antenna(s) **238**. In this case, the RF pulse generator module **106** can directly control the envelope of the drive waveform within the wireless stimulator device **114**, and thus no energy storage may be required inside the stimulator itself. In this implementation, the stimulator circuitry may modify the envelope of the drive waveform or may pass it directly to the charge-balance capacitor and/or electrode-selection stage.

In some implementations, the implanted wireless stimulator device **114** may deliver a single-phase drive waveform to the charge balance capacitor or it may deliver multiphase drive waveforms. In the case of a single-phase drive waveform, for example, a negative-going rectangular pulse, this pulse comprises the physiological stimulus phase, and the charge-balance capacitor is polarized (charged) during this phase. After the drive pulse is completed, the charge balancing function is performed solely by the passive discharge of the charge-balance capacitor, where is dissipates its charge through the tissue in an opposite polarity relative to the preceding stimulus. In one implementation, a resistor within the stimulator facilitates the discharge of the charge-balance capacitor. In some implementations, using a passive discharge phase, the capacitor may allow virtually complete discharge prior to the onset of the subsequent stimulus pulse.

In the case of multiphase drive waveforms the wireless stimulator may perform internal switching to pass negative-going or positive-going pulses (phases) to the charge-balance capacitor. These pulses may be delivered in any sequence and with varying amplitudes and waveform shapes to achieve a desired physiological effect. For example, the stimulus phase may be followed by an actively driven charge-balancing phase, and/or the stimulus phase may be preceded by an opposite phase. Preceding the stimulus with an opposite-polarity phase, for example, can have the advantage of reducing the amplitude of the stimulus phase required to excite tissue.

In some implementations, the amplitude and timing of stimulus and charge-balancing phases is controlled by the amplitude and timing of RF pulses from the RF pulse generator module **106**, and in others this control may be administered internally by circuitry onboard the wireless stimulator device **114**, such as controller **250**. In the case of onboard control, the amplitude and timing may be specified or modified by data commands delivered from the pulse generator module **106**.

FIG. **3** is a flowchart showing an example of an operation of a wireless neural stimulation system. In block **302**, the wireless stimulator device **114** is implanted in proximity to nerve bundles and is coupled to the electric field produced by the TX antenna **110**. That is, the pulse generator module **106** and the TX antenna **110** are positioned in such a way (for example, in proximity to the patient) that the TX antenna **110** is electrically radiatively coupled with the implanted RX antenna **238** of the wireless stimulator device **114**. In certain implementations, both the antenna **110** and the RF pulse generator **106** are located subcutaneously. In other implementations, the antenna **110** and the RF pulse generator **106** are located external to the patient's body. In this case, the TX antenna **110** may be coupled directly to the patient's skin.

Energy from the RF pulse generator is radiated to the implanted wireless stimulator device **114** from the antenna **110** through tissue, as shown in block **304**. The energy radiated may be controlled by the Patient/Clinician Parameter inputs in block **301**. In some instances, the parameter settings can be adjusted in an open loop fashion by the patient or clinician, who would adjust the parameter inputs in block **301** to the system.

The implanted wireless stimulator device **114** uses the received energy to generate electrical pulses to be applied to the neural tissue through the electrodes **238**. For instance, the wireless stimulator device **114** may contain circuitry that rectifies the received RF energy and conditions the waveform to charge balance the energy delivered to the electrodes to stimulate the targeted nerves or tissues, as shown in block **306**. The implanted wireless stimulator device **114** communicates with the pulse generator **106** by using antenna **238** to send a telemetry signal, as shown in block **308**. The telemetry signal may contain information about parameters of the electrical pulses applied to the electrodes, such as the impedance of the electrodes, whether the safe current limit has been reached, or the amplitude of the current that is presented to the tissue from the electrodes.

In block **310**, the RF pulse generator **106** detects amplifies, filters and modulates the received telemetry signal using amplifier **226**, filter **224**, and demodulator **222**, respectively. The A/D converter **230** then digitizes the resulting analog signal, as shown in **312**. The digital telemetry signal is routed to CPU **230**, which determines whether the parameters of the signal sent to the wireless stimulator device **114** need to be adjusted based on the digital telemetry signal. For instance, in block **314**, the CPU **230** compares the information of the digital signal to a look-up table, which may indicate an appropriate change in stimulation parameters. The indicated change may be, for example, a change in the current level of the pulses applied to the electrodes. As a result, the CPU may change the output power of the signal sent to wireless stimulator device **114** so as to adjust the current applied by the electrodes **254**, as shown in block **316**.

Thus, for instance, the CPU **230** may adjust parameters of the signal sent to the wireless stimulator device **114** every cycle to match the desired current amplitude setting programmed by the patient, as shown in block **318**. The status of the stimulator system may be sampled in real time at a rate of 8 Kbits per second of telemetry data. All feedback data received from the wireless stimulator device **114** can be maintained against time and sampled per minute to be stored for download or upload to a remote monitoring system accessible by the health care professional for trending and statistical correlations in block **318**. If operated in an open loop fashion, the stimulator system operation may be reduced to just the functional elements shown in blocks **302**, **304**, **306**, and **308**, and the patient uses their judgment to adjust parameter settings rather than the closed looped feedback from the implanted device.

FIG. **4** is a circuit diagram showing an example of a wireless stimulator device **114**. This example contains paired electrodes, comprising cathode electrode(s) **408** and anode electrode(s) **410**, as shown. When energized, the charged electrodes create a volume conduction field of current density within the tissue. In this implementation, the wireless energy is received through a dipole antenna(s) **238**. At least four diodes are connected together to form a full wave bridge rectifier **402** attached to the dipole antenna(s) **238**. Each diode, up to 100 micrometers in length, uses a junction potential to prevent the flow of negative electrical current, from cathode to anode, from passing through the device when said current does not exceed the reverse threshold. For neural stimulation via wireless power, transmitted through tissue, the natural inefficiency of the lossy material may lead to a low threshold voltage. In this implementation, a zero biased diode rectifier results in a low output impedance for the device. A resistor **404** and a smoothing capacitor **406** are placed across the output nodes of the bridge rectifier to discharge the electrodes to the ground of the bridge anode. The rectification bridge **402** includes two branches of diode pairs connecting an anode-to-anode and then cathode to cathode. The electrodes **408** and **410** are connected to the output of the charge balancing circuit **246**.

FIG. **5** is a circuit diagram of another example of a wireless stimulator device **114**. The example shown in FIG. **5** includes multiple electrode control and may employ full closed loop control. The wireless stimulation device includes an electrode array **254** in which the polarity of the electrodes can be assigned as cathodic or anodic, and for which the electrodes can be alternatively not powered with any energy. When energized, the charged electrodes create a volume conduction field of current density within the tissue. In this implementation, the wireless energy is received by the device through the dipole antenna(s) **238**. The electrode array **254** is controlled through an on-board controller circuit **242** that sends the appropriate bit information to the electrode interface **252** in order to set the polarity of each electrode in the array, as well as power to each individual electrode. The lack of power to a specific electrode would set that electrode in a functional OFF position. In another implementation (not shown), the amount of current sent to each electrode is also controlled through the controller **242**. The controller current, polarity and power state parameter data, shown as the controller output, is be sent back to the antenna(s) **238** for telemetry transmission back to the pulse generator module **106**. The controller **242** also includes the functionality of current monitoring and sets a bit register counter so that the status of total current drawn can be sent back to the pulse generator module **106**.

At least four diodes can be connected together to form a full wave bridge rectifier **302** attached to the dipole antenna(s) **238**. Each diode, up to 100 micrometers in length, uses a junction potential to prevent the flow of negative electrical current, from cathode to anode, from passing through the device when said current does not exceed the reverse threshold. For neural stimulation via wireless power, transmitted through tissue, the natural inefficiency of the lossy material may lead to a low threshold voltage. In this implementation, a zero biased diode rectifier results in a low output impedance for the device. A resistor **404** and a smoothing capacitor **406** are placed across the output nodes of the bridge rectifier to discharge the electrodes to the ground of the bridge anode. The rectification bridge **402** may include two branches of diode pairs connecting an anode-to-anode and then cathode to cathode. The electrode polarity outputs, both cathode **408** and anode **410** are connected to the outputs formed by the bridge connection. Charge balancing circuitry **246** and current limiting circuitry **248** are placed in series with the outputs.

FIG. **6** is a block diagram showing an example of control functions **605** and feedback functions **630** of an implantable wireless stimulator device **600**, such as the ones described above or further below. An example implementation may be a wireless stimulator device module **114**, as discussed above in association with FIG. **2**. Control functions **605** include functions **610** for polarity switching of the electrodes and functions **620** for power-on reset.

Polarity switching functions **610** may employ, for example, a polarity routing switch network to assign polarities to electrodes **254**. The assignment of polarity to an electrode may, for instance, be one of: a cathode (negative polarity), an anode (positive polarity), or a neutral (off) polarity. The polarity assignment information for each of the electrodes **254** may be contained in the input signal received by implantable wireless stimulator device **600** through Rx antenna **238** from RF pulse generator module **106**. Because a programmer module **102** may control RF pulse generator module **106**, the polarity of electrodes **254** may be controlled remotely by a programmer through programmer module **102**, as shown in FIG. **2**.

Power-on reset functions **620** may reset the polarity assignment of each electrode immediately on each power-on event. As will be described in further detail below, this reset operation may cause RF pulse generator module **106** to transmit the polarity assignment information to the implantable wireless stimulator device **600**. Once the polarity assignment information is received by the implantable wireless stimulator device **600**, the polarity assignment information may be stored in a register file, or other short-term memory component. Thereafter the polarity assignment information may be used to configure the polarity assignment of each electrode. If the polarity assignment information transmitted in response to the reset encodes the same polarity state as before the power-on event, then the polarity state of each electrode can be maintained before and after each power-on event.

Feedback functions **630** include functions **640** for monitoring delivered power to electrodes **254** and functions **650** for making impedance diagnosis of electrodes **254**. For example, delivered power functions **640** may provide data encoding the amount of power being delivered from electrodes **254** to the excitable tissue and tissue impedance diagnostic functions **650** may provide data encoding the diagnostic information of tissue impedance. The tissue impedance is the electrical impedance of the tissue as seen between negative and positive electrodes when a stimulation current is being released between negative and positive electrodes.

Feedback functions **630** may additionally include tissue depth estimate functions **660** to provide data indicating the overall tissue depth that the input radio frequency (RF) signal from the pulse generator module, such as, for example, RF pulse generator module **106**, has penetrated before reaching the implanted antenna, such as, for example, RX antenna **238**, within the wireless implantable stimulator device **600**, such as, for example, implanted wireless stimulator device **114**. For instance, the tissue depth estimate may be provided by comparing the power of the received input signal to the power of the RF pulse transmitted by the RF pulse generator **106**. The ratio of the power of the received input signal to the power of the RF pulse transmitted by the RF pulse generator **106** may indicate an attenuation caused by wave propagation through the tissue. For example, the

second harmonic described below may be received by the RF pulse generator **106** and used with the power of the input signal sent by the RF pulse generator to determine the tissue depth. The attenuation may be used to infer the overall depth of implantable wireless stimulator device **600** underneath the skin.

The data from blocks **640**, **650**, and **660** may be transmitted, for example, through Tx antenna **110** to an implantable RF pulse generator **106**, as illustrated in FIGS. **1** and **2**.

As discussed above in association with FIGS. **1**, **2**, **4**, and **5**, an implantable wireless stimulator device **600** may utilize rectification circuitry to convert the input signal (e.g., having a carrier frequency within a range from about 300 MHz to about 8 GHz) to a direct current (DC) power to drive the electrodes **254**. Some implementations may provide the capability to regulate the DC power remotely. Some implementations may further provide different amounts of power to different electrodes, as discussed in further detail below.

FIG. **7** is a schematic showing an example of an implantable wireless stimulator device **700** with components to implement control and feedback functions as discussed above in association with FIG. **6**. An RX antenna **705** receives the input signal. The RX antenna **705** may be embedded as a dipole, microstrip, folded dipole or other antenna configuration other than a coiled configuration, as described above. The input signal has a carrier frequency in the GHz range and contains electrical energy for powering the wireless implantable stimulator device **700** and for providing stimulation pulses to electrodes **254**. Once received by the antenna **705**, the input signal is routed to power management circuitry **710**. Power management circuitry **710** is configured to rectify the input signal and convert it to a DC power source. For example, the power management circuitry **710** may include a diode rectification bridge such as the diode rectification bridge **402** illustrated in FIG. **4**. The DC power source provides power to stimulation circuitry **711** and logic power circuitry **713**. The rectification may utilize one or more full wave diode bridge rectifiers within the power management circuitry **710**. In one implementation, a resistor can be placed across the output nodes of the bridge rectifier to discharge the electrodes to the ground of the bridge anode, as illustrated by the shunt register **404** in FIG. **7**.

Turning momentarily to FIG. **8**, a schematic of an example of a polarity routing switch network **800** is shown. As discussed above, the cathodic (−) energy and the anodic energy are received at input **1** (block **722**) and input **2** (block **723**), respectively. Polarity routing switch network **800** has one of its outputs coupled to an electrode of electrodes **254** which can include as few as two electrodes, or as many as sixteen electrodes. Eight electrodes are shown in this implementation as an example.

Polarity routing switch network **800** is configured to either individually connect each output to one of input **1** or input **2**, or disconnect the output from either of the inputs. This selects the polarity for each individual electrode of electrodes **254** as one of: neutral (off), cathode (negative), or anode (positive). Each output is coupled to a corresponding three-state switch **830** for setting the connection state of the output. Each three-state switch is controlled by one or more of the bits from the selection input **850**. In some implementations, selection input **850** may allocate more than one bits to each three-state switch. For example, two bits may encode the three-state information. Thus, the state of each output of polarity routing switch device **800** can be controlled by information encoding the bits stored in the register **732**, which may be set by polarity assignment information received from the remote RF pulse generator module **106**, as described further below.

Returning to FIG. **7**, power and impedance sensing circuitry may be used to determine the power delivered to the tissue and the impedance of the tissue. For example, a sensing resistor **718** may be placed in serial connection with the anodic branch **714**. Current sensing circuit **719** senses the current across the resistor **718** and voltage sensing circuit **720** senses the voltage across the resistor. The measured current and voltage may correspond to the actual current and voltage applied by the electrodes to the tissue.

As described below, the measured current and voltage may be provided as feedback information to RF pulse generator module **106**. The power delivered to the tissue may be determined by integrating the product of the measured current and voltage over the duration of the waveform being delivered to electrodes **254**. Similarly, the impedance of the tissue may be determined based on the measured voltage being applied to the electrodes and the current being applied to the tissue. Alternative circuitry (not shown) may also be used in lieu of the sensing resistor **718**, depending on implementation of the feature and whether both impedance and power feedback are measured individually, or combined.

The measurements from the current sensing circuitry **719** and the voltage sensing circuitry **720** may be routed to a voltage controlled oscillator (VCO) **733** or equivalent circuitry capable of converting from an analog signal source to a carrier signal for modulation. VCO **733** can generate a digital signal with a carrier frequency. The carrier frequency may vary based on analog measurements such as, for example, a voltage, a differential of a voltage and a power, etc. VCO **733** may also use amplitude modulation or phase shift keying to modulate the feedback information at the carrier frequency. The VCO or the equivalent circuit may be generally referred to as an analog controlled carrier modulator. The modulator may transmit information encoding the sensed current or voltage back to RF pulse generator **106**.

Antenna **725** may transmit the modulated signal, for example, in the GHz frequency range, back to the RF pulse generator module **106**. In some embodiments, antennas **705** and **725** may be the same physical antenna. In other embodiments, antennas **705** and **725** may be separate physical antennas. In the embodiments of separate antennas, antenna **725** may operate at a resonance frequency that is higher than the resonance frequency of antenna **705** to send stimulation feedback to RF pulse generator module **106**. In some embodiments, antenna **725** may also operate at the higher resonance frequency to receive data encoding the polarity assignment information from RF pulse generator module **106**.

Antenna **725** may include a telemetry antenna **725** which may route received data, such as polarity assignment information, to the stimulation feedback circuit **730**. The encoded polarity assignment information may be on a band in the GHz range. The received data may be demodulated by demodulation circuitry **731** and then stored in the register file **732**. The register file **732** may be a volatile memory. Register file **732** may be an 8-channel memory bank that can store, for example, several bits of data for each channel to be assigned a polarity. Some embodiments may have no register file, while some embodiments may have a register file up to 64 bits in size. The information encoded by these bits may be sent as the polarity selection signal to polarity routing switch network **721**, as indicated by arrow **734**. The bits may encode the polarity assignment for each output of

the polarity routing switch network as one of: + (positive), − (negative), or 0 (neutral). Each output connects to one electrode and the channel setting determines whether the electrode will be set as an anode (positive), cathode (negative), or off (neutral).

Returning to power management circuitry **710**, in some embodiments, approximately 90% of the energy received is routed to the stimulation circuitry **711** and less than 10% of the energy received is routed to the logic power circuitry **713**. Logic power circuitry **713** may power the control components for polarity and telemetry. In some implementations, the power circuitry **713**, however, does not provide the actual power to the electrodes for stimulating the tissues. In certain embodiments, the energy leaving the logic power circuitry **713** is sent to a capacitor circuit **716** to store a certain amount of readily available energy. The voltage of the stored charge in the capacitor circuit **716** may be denoted as Vdc. Subsequently, this stored energy is used to power a power-on reset circuit **716** configured to send a reset signal on a power-on event. If the wireless implantable neural stimulator **700** loses power for a certain period of time, for example, in the range from about 1 millisecond to over 10 milliseconds, the contents in the register file **732** and polarity setting on polarity routing switch network **721** may be zeroed. The implantable wireless stimulation device **700** may lose power, for example, when it becomes less aligned with RF pulse generator module **106**. Using this stored energy, power-on reset circuit **740** may provide a reset signal as indicated by arrow **717**. This reset signal may cause stimulation feedback circuit **730** to notify RF pulse generator module **106** of the loss of power. For example, stimulation feedback circuit **730** may transmit a telemetry feedback signal to RF pulse generator module **106** as a status notification of the power outage. This telemetry feedback signal may be transmitted in response to the reset signal and immediately after power is back on wireless stimulation device **700**. RF pulse generator module **106** may then transmit one or more telemetry packets to implantable wireless stimulation device. The telemetry packets contain polarity assignment information, which may be saved to register file **732** and may be sent to polarity routing switch network **721**. Thus, polarity assignment information in register file **732** may be recovered from telemetry packets transmitted by RF pulse generator module **106** and the polarity assignment for each output of polarity routing switch network **721** may be updated accordingly based on the polarity assignment information.

The telemetry antenna **725** may transmit the telemetry feedback signal back to RF pulse generator module **106** at a frequency higher than the characteristic frequency of an RX antenna **705**. In one implementation, the telemetry antenna **725** can have a heightened resonance frequency that is the second harmonic of the characteristic frequency of RX antenna **705**. For example, the second harmonic may be utilized to transmit power feedback information regarding an estimate of the amount of power being received by the electrodes. The feedback information may then be used by the RF pulse generator in determining any adjustment of the power level to be transmitted by the RF pulse generator **106**. In a similar manner, the second harmonic energy can be used to detect the tissue depth. The second harmonic transmission can be detected by an external antenna, for example, on RF pulse generator module **106** that is tuned to the second harmonic. As a general matter, power management circuitry **710** may contain rectifying circuits that are non-linear device capable of generating harmonic energies from input signal. Harvesting such harmonic energy for transmitting telemetry feedback signal could improve the efficiency of implantable wireless stimulator device **700**.

FIG. **9**A is a diagram of an example implementation of a microwave field stimulator (MFS) **902** as part of a stimulation system utilizing an implantable wireless stimulator device **922**. In this example, the MFS **902** is external to a patient's body and may be placed within in close proximity, for example, within 3 feet, to an implantable wireless stimulator device **922**. The RF pulse generator module **106** may be one example implementation of MFS **902**. MFS **902** may be generally known as a controller module. The implantable wireless stimulator device **922** is a passive device. The implantable wireless stimulator device **922** does not have its own independent power source, rather it receives power for its operation from transmission signals emitted from a TX antenna powered by the MFS **902**, as discussed above.

In certain embodiments, the MFS **902** may communicate with a programmer **912**. The programmer **912** may be a mobile computing device, such as, for example, a laptop, a smart phone, a tablet, etc. The communication may be wired, using for example, a USB or firewire cable. The communication may also be wireless, utilizing for example, a bluetooth protocol implemented by a transmitting blue tooth module **904**, which communicates with the host bluetooth module **914** within the programmer **912**.

The MFS **902** may additionally communicate with wireless stimulator device **922** by transmitting a transmission signal through a Tx antenna **907** coupled to an amplifier **906**. The transmission signal may propagate through skin and underlying tissues to arrive at the Rx antenna **923** of the wireless stimulator device **922**. In some implementations, the wireless stimulator device **922** may transmit a telemetry feedback signal back to microwave field stimulator **902**.

The microwave field stimulator **902** may include a microcontroller **908** configured to manage the communication with a programmer **912** and generate an output signal. The output signal may be used by the modulator **909** to modulate a RF carrier signal. The frequency of the carrier signal may be in the microwave range, for example, from about 300 MHz to about 8 GHz, preferably from about 800 MHz to 1.3 GHz. The modulated RF carrier signal may be amplified by an amplifier **906** to provide the transmission signal for transmission to the wireless stimulator device **922** through a TX antenna **907**.

FIG. **9**B is a diagram of another example of an implementation of a microwave field stimulator **902** as part of a stimulation system utilizing a wireless stimulator device **922**. In this example, the microwave field stimulator **902** may be embedded in the body of the patient, for example, subcutaneously. The embedded microwave field stimulator **902** may receive power from a detached, remote wireless battery charger **932**.

The power from the wireless battery charger **932** to the embedded microwave field stimulator **902** may be transmitted at a frequency in the MHz or GHz range. The microwave field stimulator **902** shall be embedded subcutaneously at a very shallow depth (e.g., less than 1 cm), and alternative coupling methods may be used to transfer energy from wireless battery charger **932** to the embedded MFS **902** in the most efficient manner as is well known in the art.

In some embodiments, the microwave field stimulator **902** may be adapted for placement at the epidural layer of a spinal column, near or on the dura of the spinal column, in tissue in close proximity to the spinal column, in tissue located near a dorsal horn, in dorsal root ganglia, in one or

more of the dorsal roots, in dorsal column fibers, or in peripheral nerve bundles leaving the dorsal column of the spine.

In this embodiment, the microwave field stimulator **902** shall transmit power and parameter signals to a passive Tx antenna also embedded subcutaneously, which shall be coupled to the RX antenna within the wireless stimulator device **922**. The power required in this embodiment is substantially lower since the TX antenna and the RX antenna are already in body tissue and there is no requirement to transmit the signal through the skin.

FIG. **10** is a detailed diagram of an example microwave field stimulator **902**. A microwave field stimulator **902** may include a microcontroller **908**, a telemetry feedback module **1002**, and a power management module **1004**. The microwave field stimulator **902** has a two-way communication schema with a programmer **912**, as well as with a communication or telemetry antenna **1006**. The microwave field stimulator **902** sends output power and data signals through a TX antenna **1008**.

The microcontroller **908** may include a storage device **1014**, a bluetooth interface **1013**, a USB interface **1012**, a power interface **1011**, an analog-to-digital converter (ADC) **1016**, and a digital to analog converter (DAC) **1015**. Implementations of a storage device **1014** may include non-volatile memory, such as, for example, static electrically erasable programmable read-only memory (SEEPROM) or NAND flash memory. A storage device **1014** may store waveform parameter information for the microcontroller **908** to synthesize the output signal used by modulator **909**. The stimulation waveform may include multiple pulses. The waveform parameter information may include the shape, duration, amplitude of each pulse, as well as pulse repetition frequency. A storage device **1014** may additionally store polarity assignment information for each electrode of the wireless stimulator device **922**. The Bluetooth interface **1013** and USB interface **1012** respectively interact with either the bluetooth module **1004** or the USB module to communicate with the programmer **912**.

The communication antenna **1006** and a TX antenna **1008** may, for example, be configured in a variety of sizes and form factors, including, but not limited to a patch antenna, a slot antenna, or a dipole antenna. The TX antenna **1008** may be adapted to transmit a transmission signal, in addition to power, to the implantable, passive neural stimulator device **922**. As discussed above, an output signal generated by the microcontroller **908** may be used by the modulator **909** to provide the instructions for creation of a modulated RF carrier signal. The RF carrier signal may be amplified by amplifier **906** to generate the transmission signal. A directional coupler **1009** may be utilized to provide two-way coupling so that both the forward power of the transmission signal flow transmitted by the TX antenna **1008** and the reverse power of the reflected transmission may be picked up by power detector **1022** of telemetry feedback module **1002**. In some implementations, a separate communication antenna **1006** may function as the receive antenna for receiving telemetry feedback signal from the wireless stimulator device **922**. In some configurations, the communication antenna may operate at a higher frequency band than the TX antenna **1008**. For example, the communication antenna **1006** may have a characteristic frequency that is a second harmonic of the characteristic frequency of TX antenna **1008**, as discussed above.

In some embodiments, the microwave field stimulator **902** may additionally include a telemetry feedback module **902**. In some implementations, the telemetry feedback module **1002** may be coupled directly to communication antenna **1006** to receive telemetry feedback signals. The power detector **1022** may provide a reading of both the forward power of the transmission signal and a reverse power of a portion of the transmission signal that is reflected during transmission. The telemetry signal, forward power reading, and reverse power reading may be amplified by low noise amplifier (LNA) **1024** for further processing. For example, the telemetry module **902** may be configured to process the telemetry feedback signal by demodulating the telemetry feedback signal to extract the encoded information. Such encoded information may include, for example, a status of the wireless stimulator device **922** and one or more electrical parameters associated with a particular channel (electrode) of the wireless stimulator device **922**. Based on the decoded information, the telemetry feedback module **1002** may be used to calculate a desired operational characteristic for the wireless stimulator device **922**.

Some embodiments of the MFS **902** may further include a power management module **1004**. A power management module **1004** may manage various power sources for the MFS **902**. Example power sources include, but are not limited to, lithium-ion or lithium polymer batteries. The power management module **1004** may provide several operational modes to save battery power. Example operation modes may include, but are not limited to, a regular mode, a low power mode, a sleep mode, a deep sleep/hibernate mode, and an off mode. The regular mode provides regulation of the transmission of transmission signals and stimulus to the wireless stimulator device **922**. In regular mode, the telemetry feedback signal is received and processed to monitor the stimuli as normal. Low-power mode also provides regulation of the transmission of transmission signals and stimulus to the electrodes of the wireless stimulation device. However, under this mode, the telemetry feedback signal may be ignored. More specifically, the telemetry feedback signal encoding the stimulus power may be ignored, thereby saving MFS **902** overall power consumption. Under sleep mode, the transceiver and amplifier **906** are turned off, while the microcontroller is kept on with the last saved state in its memory. Under the deep sleep/hibernate mode, the transceiver and amplifier **906** are turned off, while the microcontroller is in power down mode, but power regulators are on. Under the off mode, all transceiver, microcontroller and regulators are turned off achieving zero quiescent power.

FIG. **11** is a flowchart showing an example process in which the microwave field stimulator **902** transmits polarity setting information to the wireless stimulator device **922**. Polarity assignment information is stored in a non-volatile memory **1102** within the microcontroller **908** of the MFS **902**. The polarity assignment information may be representative-specific and may be chosen to meet the specific need of a particular patient. Based on the polarity assignment information chosen for a particular patient, the microcontroller **908** executes a specific routine for assigning polarity to each electrode of the electrode array. The particular patient has an wireless stimulation device as described above.

In some implementations, the polarity assignment procedure includes sending a signal to the wireless stimulation device with an initial power-on portion followed by a configuration portion that encodes the polarity assignments. The power-on portion may, for example, simply include the RF carrier signal. The initial power-on portion has a duration that is sufficient to power-on the wireless stimulation device and allow the device to reset into a configuration mode.

Once in the configuration mode, the device reads the encoded information in the configuration portion and sets the polarity of the electrodes as indicated by the encoded information.

Thus, in some implementations, the microcontroller **908** turns on the modulator **909** so that the unmodulated RF carrier is sent to the wireless stimulator device **1104**. After a set duration, the microcontroller **908** automatically initiates transmitting information encoding the polarity assignment. In this scenario, the microcontroller **908** transmits the polarity settings in the absence of handshake signals from the wireless stimulation device. Because the microwave field stimulator **902** is operating in close proximity to wireless stimulator device **922**, signal degradation may not be severe enough to warrant the use of handshake signals to improve quality of communication.

To transmit the polarity information, the microcontroller **908** reads the polarity assignment information from the non-volatile memory and generates a digital signal encoding the polarity information **1106**. The digital signal encoding the polarity information may be converted to an analog signal, for example, by a digital-to-analog (DAC) converter **1112**. The analog signal encoding the waveform may modulate a carrier signal at modulator **909** to generate a configuration portion of the transmission signal (**1114**). This configuration portion of the transmission signal may be amplified by the power amplifier **906** to generate the signal to be transmitted by antenna **907** (**1116**). Thereafter, the configuration portion of the transmission signal is transmitted to the wireless stimulator device **922** (**1118**).

Once the configuration portion is transmitted to the wireless stimulation device, the microcontroller **908** initiates the stimulation portion of the transmission signal. Similar to the configuration portion, the microcontroller **908** generates a digital signal that encodes the stimulation waveform. The digital signal is converted to an analog signal using the DAC. The analog signal is then used to modulate a carrier signal at modulator **909** to generate a stimulation portion of the transmission signal.

In other implementations, the microcontroller **908** initiates the polarity assignment protocol after the microcontroller **908** has recognized a power-on reset signal transmitted by the neural stimulator. The power-on reset signal may be extracted from a feedback signal received by microcontroller **908** from the wireless stimulator device **922**. The feedback signal may also be known as a handshake signal in that it alerts the microwave field stimulator **902** of the ready status of the wireless stimulator device **922**. In an example, the feedback signal may be demodulated and sampled to digital domain before the power-on reset signal is extracted in the digital domain.

FIG. **12** is a flow chart showing an example of the process in which the microwave field stimulator **902** receives and processes the telemetry feedback signal to make adjustments to subsequent transmissions.

In some implementations, the microcontroller **908** polls the telemetry feedback module **1002** (**1212**). The polling is to determine whether a telemetry feedback signal has been received (**1214**). The telemetry feedback signal may include information based on which the MFS **902** may ascertain the power consumption being utilized by the electrodes of the wireless stimulator device **922**. This information may also be used to determine the operational characteristics of the combination system of the MFS **902** and the wireless stimulator device **922**, as will be discussed in further detail in association with FIG. **13**. The information may also be logged by the microwave field stimulator **902** so that the response of the patient may be correlated with past treatments received over time. The correlation may reveal the patient's individual response to the treatments the patient has received up to date.

If the microcontroller **908** determines that telemetry feedback module **1002** has not yet received telemetry feedback signal, microcontroller **908** may continue polling (**1212**). If the microcontroller **908** determines that telemetry feedback module **1002** has received telemetry feedback signal, the microcontroller **908** may extract the information contained in the telemetry feedback signal to perform calculations (**1216**). The extraction may be performed by demodulating the telemetry feedback signal and sampling the demodulated signal in the digital domain. The calculations may reveal operational characteristics of the wireless stimulator device **922**, including, for example, voltage or current levels associated with a particular electrode, power consumption of a particular electrode, and/or impedance of the tissue being stimulated through the electrodes.

Thereafter, in certain embodiments, the microcontroller **908** may store information extracted from the telemetry signals as well as the calculation results (**1218**). The stored data may be provided to a user through the programmer upon request (**1220**). The user may be the patient, the doctor, or representatives from the manufacturer. The data may be stored in a non-volatile memory, such as, for example, NAND flash memory or EEPROM.

In other embodiments, a power management schema may be triggered **1222** by the microcontroller (**908**). Under the power management schema, the microcontroller **908** may determine whether to adjust a parameter of subsequent transmissions (**1224**). The parameter may be amplitude or the stimulation waveform shape. In one implementation, the amplitude level may be adjusted based on a lookup table showing a relationship between the amplitude level and a corresponding power applied to the tissue through the electrodes. In one implementation, the waveform shape may be pre-distorted to compensate for a frequency response of the microwave field stimulator **902** and the wireless stimulator device **922**. The parameter may also be the carrier frequency of the transmission signal. For example, the carrier frequency of the transmission signal may be modified to provide fine-tuning that improves transmission efficiency.

If an adjustment is made, the subsequently transmitted transmission signals are adjusted accordingly. If no adjustment is made, the microcontroller **908** may proceed back to polling the telemetry feedback module **1002** for telemetry feedback signal (**1212**).

In other implementations, instead of polling the telemetry feedback module **1002**, the microcontroller **908** may wait for an interrupt request from telemetry feedback module **1002**. The interrupt may be a software interrupt, for example, through an exception handler of the application program. The interrupt may also be a hardware interrupt, for example, a hardware event and handled by an exception handler of the underlying operating system.

FIG. **13** is a schematic of an example implementation of the power, signal and control flow for the wireless stimulator device **922**. A DC source **1302** obtains energy from the transmission signal received at the wireless stimulator device **922** during the initial power-on portion of the transmission signal while the RF power is ramping up. In one implementation, a rectifier may rectify the received power-on portion to generate the DC source **1302** and a capacitor **1304** may store a charge from the rectified signal during the initial portion. When the stored charge reaches a certain voltage (for example, one sufficient or close to sufficient to

power operations of the wireless stimulator device **922**), the power-on reset circuit **1306** may be triggered to send a power-on reset signal to reset components of the neural stimulator. The power-on set signal may be sent to circuit **1308** to reset, for example, digital registers, digital switches, digital logic, or other digital components, such as transmit and receive logic **1310**. The digital components may also be associated with a control module **1312**. For example, a control module **1312** may include electrode control **252**, register file **732**, etc. The power-on reset may reset the digital logic so that the circuit **1308** begins operating from a known, initial state.

In some implementations, the power-on reset signal may subsequently cause the FPGA circuit **1308** to transmit a power-on reset telemetry signal back to MFS **902** to indicate that the implantable wireless stimulator device **922** is ready to receive the configuration portion of the transmission signal that contains the polarity assignment information. For example, the control module **1312** may signal the RX/TX module **1310** to send the power-on reset telemetry signal to the telemetry antenna **1332** for transmission to MFS **902**.

In other implementations, the power-on reset telemetry signal may not be provided. As discussed above, due to the proximity between MFS **902** and implantable, passive stimulator device **922**, signal degradation due to propagation loss may not be severe enough to warrant implementations of handshake signals from the implantable, passive stimulator device **922** in response to the transmission signal. In addition, the operational efficiency of implantable, passive neural stimulator device **922** may be another factor that weighs against implementing handshake signals.

Once the FPGA circuit **1308** has been reset to an initial state, the FPGA circuit **1308** transitions to a configuration mode configured to read polarity assignments encoded on the received transmission signal during the configuration state. In some implementations, the configuration portion of the transmission signal may arrive at the wireless stimulation device through the RX antenna **1334**. The transmission signal received may provide an AC source **1314**. The AC source **1314** may be at the carrier frequency of the transmission signal, for example, from about 300 MHz to about 8 GHz.

Thereafter, the control module **1312** may read the polarity assignment information and set the polarity for each electrode through the analog mux control **1316** according to the polarity assignment information in the configuration portion of the received transmission signal. The electrode interface **252** may be one example of analog mux control **1316**, which may provide a channel to a respective electrode of the implantable wireless stimulator device **922**.

Once the polarity for each electrode is set through the analog mux control **1316**, the implantable wireless stimulator device **922** is ready to receive the stimulation waveforms. Some implementations may not employ a handshake signal to indicate the wireless stimulator device **922** is ready to receive the stimulation waveforms. Rather, the transmission signal may automatically transition from the configuration portion to the stimulation portion. In other implementations, the implantable wireless stimulator device **922** may provide a handshake signal to inform the MFS **902** that implantable wireless stimulator device **922** is ready to receive the stimulation portion of the transmission signal. The handshake signal, if implemented, may be provided by RX/TX module **1310** and transmitted by telemetry antenna **1332**.

In some implementations, the stimulation portion of the transmission signal may also arrive at implantable wireless stimulation device through the RX antenna **1334**. The transmission signal received may provide an AC source **1314**. The AC source **1314** may be at the carrier frequency of the transmission signal, for example, from about 300 MHz to about 8 GHz. The stimulation portion may be rectified and conditioned in accordance with discussions above to provide an extracted stimulation waveform. The extracted stimulation waveform may be applied to each electrode of the implantable wireless stimulator device **922**. In some embodiments, the application of the stimulation waveform may be concurrent, i.e., applied to the electrodes all at once. As discussed above, the polarity of each electrode has already been set and the stimulation waveform has been applied to the electrodes in accordance with the polarity settings for the corresponding channel.

In some implementations, each channel of analog mux control **1316** is connected to a corresponding electrode and may have a reference resistor placed serially. For example, FIG. **13** shows reference resistors **1322**, **1324**, **1326**, and **1328** in a serial connection with a matching channel. Analog mux control **1316** may additionally include a calibration resistor **1320** placed in a separate and grounded channel. The calibration resistor **1320** is in parallel with a given electrode on a particular channel. The reference resistors **1322**, **1324**, **1326**, and **1328** as well as the calibration resistor **1320** may also be known as sensing resistors **718**. These resistors may sense an electrical parameter in a given channel, as discussed below.

In some configurations, an analog controlled carrier modulator may receive a differential voltage that is used to determine the carrier frequency that should be generated. The generated carrier frequency may be proportional to the differential voltage. An example analog controlled carrier modulator is VCO **733**.

In one configuration, the carrier frequency may indicate an absolute voltage, measured in terms of the relative difference from a pre-determined and known voltage. For example, the differential voltage may be the difference between a voltage across a reference resistor connected to a channel under measurement and a standard voltage. The differential voltage may be the difference between a voltage across calibration resistor **1320** and the standard voltage. One example standard voltage may be the ground.

In another configuration, the carrier frequency may reveal an impedance characteristic of a given channel. For example, the differential voltage may be the difference between the voltage at the electrode connected to the channel under measurement and a voltage across the reference resistor in series. Because of the serial connection, a comparison of the voltage across the reference resistor and the voltage at the electrode would indicate the impedance of the underlying tissue being stimulated relative to the impedance of the reference resistor. As the reference resistor's impedance is known, the impedance of the underlying tissue being stimulated may be inferred based on the resulting carrier frequency.

For example, the differential voltage may be the difference between a voltage at the calibration resistor and a voltage across the reference resistor. Because the calibration resistor is placed in parallel to a given channel, the voltage at the calibration is substantially the same as the voltage at the given channel. Because the reference resistor is in a serial connection with the given channel, the voltage at the reference resistor is a part of the voltage across the given channel. Thus, the difference between the voltage at the calibration resistor and the voltage across the reference

resistor correspond to the voltage drop at the electrode. Hence, the voltage at the electrode may be inferred based on the voltage difference.

In yet another configuration, the carrier frequency may provide a reading of a current. For example, if the voltage over reference resistor **1322** has been measured, as discussed above, the current going through reference resistor and the corresponding channel may be inferred by dividing the measured voltage by the impedance of reference resistor **1322**.

Many variations may exist in accordance with the specifically disclosed examples above. The examples and their variations may sense one or more electrical parameters concurrently and may use the concurrently sensed electrical parameters to drive an analog controlled modulator device. The resulting carrier frequency varies with the differential of the concurrent measurements. The telemetry feedback signal may include a signal at the resulting carrier frequency.

The MFS **902** may determine the carrier frequency variation by demodulating at a fixed frequency and measure phase shift accumulation caused by the carrier frequency variation. Generally, a few cycles of RF waves at the resulting carrier frequency may be sufficient to resolve the underlying carrier frequency variation. The determined variation may indicate an operation characteristic of the implantable wireless stimulator device **922**. The operation characteristics may include an impedance, a power, a voltage, a current, etc. The operation characteristics may be associated with an individual channel. Therefore, the sensing and carrier frequency modulation may be channel specific and applied to one channel at a given time. Consequently, the telemetry feedback signal may be time shared by the various channels of the implantable wireless stimulator device **922**.

In one configuration, the analog MUX **1318** may be used by the controller module **1312** to select a particular channel in a time-sharing scheme. The sensed information for the particular channel, for example, in the form of a carrier frequency modulation, may be routed to RX/TX module **1310**. Thereafter, RX/TX module **1310** transmits, through the telemetry antenna **1332**, to the MFS **902**, the telemetry feedback encoding the sensed information for the particular channel.

Some implementations may include an application-specific integrated circuit (ASIC) chip on the wireless stimulator device for processing input signal and interfacing with the implanted electrodes. The ASIC chip may be coupled to antenna(s) to receive the input signal from an external controller. The ASIC chip may harvest RF power from the received input signal to power the ASIC chip and the electrodes. The ASIC chip may also extract polarity setting information from the received input signal and use such information to set the polarity for electrode interfaces. Moreover, the ASIC chip may extract waveform parameters from the received input signal and use such information to create electrical impulses for stimulating excitable tissues through the electrodes. In particular, the ASIC chip may include a current steering feature to mirror currents to each electrode with evenness while maintaining a compact chip size.

FIG. **14** is a diagram of an example of ASIC chip **1400** for implantable use. Chip **1400** may be fabricated based on a 0.6 um, double poly process utilizing High Value resistors, Schottky diodes and High Voltage Transistors. In some implementations, chip **1400** can be fabricated at a width of 0.5 mm for fitting into, for example, an 18 Gauge needle. In these implementations, chip **1400** can have a length-width ratio of up to 10 to 1. Chip **1400** can be coupled to, for example, either four (4) or eight (8) platinum-iridium electrodes that deliver electrical impulses to tissue.

Chip **1400** includes RF to DC rectifying circuit **1402**, a logic control circuit **1404**, and a driving circuit **1406**. RF to DC rectifying circuit **1402** is coupled to differential antennas **1412**A and **1412**B. An RF input signal can be received at the differential antennas and then rectified to have the amplitude detected. The rectified signal may provide power for the chip **1400**. Thereafter, logic control circuit **1404** may extract waveform parameters from the amplitude detected signal. Subsequently, logic control circuit **1404** may generate electrical impulses according to the extracted waveform parameters and solely based on the extracted electric power. The generated electrical impulses may then be provided to the driving circuit **1406**, which includes charge balancing and current mirroring circuits. Driving circuit **1406** is coupled to electrode interfaces **1408**A to **1408**H, each coupled to a respective electrical load **1409**A through **1409**H. The electrical impulses are subsequently delivered to each electrode, namely **1410**A through **1410**H.

In this diagram, a diode bridge circuit **1414** is included to provide full-wave rectification to the input signal received in differential form from differential antennas **1412**A and **1412**B. Full-wave rectification may utilize both the positive and negative portions of the RF input signal as received at differential antennas **1412**A and **1412**B.

In some implementations, a dipole antenna in a differential configuration may be embedded into a wireless implantable stimulator device. The dipole antenna receives power, serial communication, and stimulus waveforms from an external transmitter placed outside the patient's body. The dipole antenna is connected directly to a flexible circuit board embedded within the implantable stimulator device that contains discrete components and chip **1400**. Chip **1400** can include wireless serial command receiver with up to eight channel multiplexing functionality.

The rectification may provide power to remaining portions of chip **1400**. In some instances, VDD circuit **1418** and ground circuit **1419** are coupled to capacitor C**1** **1420** to provide stored charges. The stored charges may generally power chip **1400**. In some implementations, a diode may be used to supply the VDD logic supply from Vrect. If chip **1400** is active and the voltage VDD dips below 1.8V, chip **1400** may enter into a "VDD low voltage recovery" mode. In this state any/all high side drivers will be temporarily over ridden to high impedance state (Hi-Z) and all low side drivers will be Hi-Z. Once VDD returns t**6** above 3.0V state and in the running mode the drivers would return to their previously programmed state.

Output from rectifying circuit **1402** is coupled to the logic control circuit **1404**. As depicted, logic control circuit **1404** may include logic control/state machine **1422** and timer/oscillator **1424**. Logic control/state machine **1422** may be coupled to channel selector **1426**.

The received RF input signal may contain waveform parameters for electrical impulses to stimulate tissues. The received RF input signal may contain polarity setting information for setting the interface for each electrode.

Referring to FIG. **15**, a sequence diagram during operation of the chip **1400** is shown. Specifically, the pulse sequence **1500** includes segments of pulses. Each segment may last an epoch time (depicted as T_{epoch}). Each segment may include two portions, namely an initial portion and a subsequent stimulation portion. In more detail, the initial portion refers to the portion in which electrical power contained in the RF input signal is harvested and electrical

charges are pumped into capacitor C1 **1420**. The initial portion may last a period marked as Thigh. The initial portion may be referred to as the communication initialization pulses **1502**A and **1502**B. The stimulation portion corresponds to portion **1504** and may contain a serial message encoding waveform parameters for electrical impulses and polarity setting information for the electrode interfaces. In some instances, portion **1504** may be present in the first segment of sequence **1500** to configure electrical impulses and polarity setting. Absent a power-on reset event, the configuration information of waveform parameters and polarity setting may be fixed once the initialization is completed.

Chip **1400** may tolerate serial messages embedded between power bursts. For example, the transmitter may initiate a serial communication message by sending a 2 ms "Communication Initialization Pulse", CIP, (T_{high}) followed by a 2 ms period of no power transmission (T_{msg}–T_{high}). In this example, data transmission may immediately follow this 2 ms delay and starts at time T_{msg}. Bit timing calibration may be performed by measuring the length of the header byte in the transmitted data stream.

In some implementations, serial data may use a format based on the IrDA SIR format. This coding format sends a pulse where the bit to be sent is a '0'. During bit times where the bit is set to "1," no pulse may be sent. Each pulse may be as short as 3/16ths of a bit time however this width can be adjusted if necessary. This format may require less power and therefore can allow serial data transmission to operate at lower baud rates.

In an example serial data communication, data can be transmitted asynchronously as bytes with 1 start and 1 stop bit (e.g. 8-n-1 format carries the same overhead to RS-232 with 10 bits transmitted but only 8 of the 10 bits carry data while the other 2 bits are protocol overhead). The LSB may be the first data bit transmitted. This adds up to 70 bits total transmitted for 7 bytes of data. Ten of these bits are protocol overhead and 60 of these bits are available to carry data. In this example, there is no additional delay between bytes, the data stream is continuous.

In the example, the serial baud rate is 19200. Serial messages can be of a fixed length of 7 bytes, including a header byte, five payload bytes, and a checksum byte. Payload bytes may generally encode the polarity setting for each electrode interface, the electrode drivers to use for each electrode, the amplitude level for each electrode driver, etc. The checksum byte generally helps ensuring message integrity.

The header byte is used to identify the start of a data message. In some implementations, it can be preset to the value OxAA. In these implementations, the header byte can be discarded until a correct header byte is received. The header may also be used to calibrate the internal oscillator, which is powered by wireless energy stored on VDD. Some implementations may provide a unique structure of on-off-on-off-on-off-on-off-on-off for the 10-bit sequence as timing markers at regular (104 μs between transmissions) intervals.

In some implementations, the header may include the address of the selected electrode array. For example, Bit **7** of Byte 1 can be the Lead Address to distinguish between one of two possible electrode arrays is the message intended. An electrode array may only implement messages that match its lead address assigned. If a lead of channel A receives a message that is intended for channel B, the state machine may reject the new message and maintain the previously stored register contents. In this example, each electrode array can have an address of 0 or 1 that can be determined by pin strapping during manufacture of the lead.

Returning to FIG. **14**, in some implementations, AM detector **1416** may output logic zero when RF power is received. In some implementations, pre-amplification of low voltage data signals or limiting of high voltage data signals may extend the operational range of the AM detector **1416**. As such, signals 100 mV or greater will be detected. AM detector **1416** may decode serial streams that are transmitted at 19200 Baud. The AM detector **1416** input may be internal to chip **1400** and characterized for use at high frequencies (869-915 MHz).

AM detector **1416** may generally process rectified signals within a nominal range from between 50 mVpp to 15 Vpp power supply levels (peak to peak). AM detector **1416** may include a preamp to clamp higher swing signals without output collapsing or folding down. The preamp should have sufficient gain and low offset to resolve 100 m Vpp data signals.

AM detector **1416** may detect serial data encoded using IrDA (SIR) formatting. The serial data receiver may be included in AM detector **1416** and may convert the data from a serial format into a parallel format. Operations of the serial data receiver hardware may be controlled by a clock signal, which runs at a multiple of the data rate. In some implementations, the receiver can test the state of the incoming signal on each clock pulse to search the start bit. If the apparent start bit is valid, then the bit signals the start of a new character. If not, the bit is considered a spurious pulse or power pulse and is ignored. After waiting a further bit time, the state of the line is again sampled and the resulting level clocked into a shift register.

After the required number of bit periods for the character length have elapsed, the contents of the shift register are made available to the receiving system. The serial data receiver has no shared timing system with the transmitter apart from the communication signal.

Serial data receiver on chip **1400** may receive and buffer seven (7) eight-bit words. The data contained in the words shall be used to program the control registers in the receiver IC LMI927 if a checksum match is successful. The data will be ignored if a checksum match is unsuccessful and the receiver will continue to listen for valid data. The serial data receiver will reset and prepare to receive a new word if a received byte does not meet IrDA (SIR) framing parameters. This will allow the serial receiver to quickly reset after being falsely activated by reception of a spurious signal or a stim power pulse. The serial data receiver will not have to wait to fully receive all words if any individual byte does not meet timing parameters.

Chip **1400** may remain in an un-configured state (all high-side outputs are high-Z, low-side outputs are in triode mode) until a valid set of serial data is received. Notably, in some implementations, the serial receiver may be not be operational if the Device Lock bit is set.

Logic control/state machine **1422** may be synchronized by timer/oscillator **1424**. The synchronization may enable logic control/state machine **1422** to extract and decode waveform parameters as well as polarity setting information from portion **1504**. Logic control/state machine **1422** may then create one or more electrical impulses according to the waveform parameters. The Logic control/state machine **1422** may also set polarities of electrode interfaces **1408**A to **1408**H according to the extracted polarity setting information.

The output of Logic Control/State Machine **1422** may be coupled to driving circuit **1406** which includes features of

charge balancing, shunt resistors, and current mirroring. In particular, driving circuit **1406** includes shunt resistor controller **1430** constructed to couple a shunt resistor to switch network **1432**. The coupling can enhance default resistor **1431** through delay controller **1433**. The delay controller may insert a corresponding shunt resistor to the circuit including the stimulating electrode at the end of an electrical impulse to reduce the amount of leakage current.

Some implementations may incorporate a variable shunt resistor to control the discharge of the stimulus pulse from the DC-Blocking capacitors. In these implementations, the initial serial commands contain instructions for the set value for the shunt resistor. For example, the operator may select between four (4) different settings. The internal shunts are configured so that during a stimulus pulse they are off, and after a pulse they are engaged.

The engagement of the resistors can be delayed following application of the electrical impulse. The timer is to delay the onset of the discharge of the DC Blocking capacitors. The timer may be initialized during the stimulus pulse and it starts its delay at the end of the stimulus phase. The delay has a fixed duration and may be independent of the stimulus amplitude, repetition rate, and pulse width.

In some implementations, the stimulating electrical impulse is delivered to a particular electrode through switch network **1432**. To deliver electrical impulses at both polarities, the switch network is coupled to current source DAC **1434**A and current sink DAC **1434**B. As depicted, current source DAC **1434**A includes a 7-bit dynamic range and is coupled to the rectifying voltage Vrect **1417**. Current source DAC **1434**A is invoked with the polarity of the connected electrode set as positive. Similarly, current source DAC **1434**A includes a 7-bit dynamic range. Current sink DAC **1434**B is invoked with the polarity of the connected electrode set as negative. Current source DAC **1434**A and current sink DAC **1434**B are complementary. Current source DAC **1434**A and current sink DAC **1434**B both include current mirrors that can function to produce a copy of the current in one device, for example, the device that generates voltage Vrect **1417**, by replicating the current in another device, for example, current source DAC **1434**A or current sink DAC **1434**B. A current mirror generally has a relatively high output resistance which helps to keep the output current constant regardless of load conditions. Another feature of the current mirror is a relatively low input resistance which helps to keep the input current constant regardless of drive conditions.

Chip **1400** may include a supervisory Power On Reset (POR) circuit designed to keep the device in reset until the system voltage has reached the proper level and stabilized. The POR circuit also operates as protection from brownout conditions when the supply voltage drops below a minimum operating level. The POR circuit design is such that it incorporates appropriate hysteresis between reset and enable levels to prevent start up inrush currents from causing the device to reset during normal operating power-up conditions. The POR circuit performs as needed to maintain proper chip functionality under all power fluctuation conditions including high-speed transients and slow rate of change voltage conditions. If required, the POR circuit can incorporate a watchdog timer tick event to ensure proper operation of the chip **1400**.

As depicted in FIG. **14**, each electrode interface is coupled to a respective capacitor **1409**A through **1409**H. These capacitors are placed in series for the purpose of DC blocking. The capacitors are last in the signal chain before the stimulation electrical impulses are delivered to the electrodes. In some implementations, the nominal series capacitance may be 3.0/μF at each electrode. Each capacitor in turn couples to a respective electrode **1410**A through **1410**H on an 8-electrode stimulator device. As noted, chip **1400** may be coupled to 8 electrode outputs. Each electrode output can be set to either sourcing, sinking or Hi-Z.

Referring to FIG. **16**A, an example digital-to-analog mirror is shown for chip **1400**. The example highlights a current mirroring feature. Generally, multiple DACs with individually addressable and controllable current codes would increase ASIC's register space and design complexity and die area. On the other hand, having fewer DACs than available channels may require coulomb counting to limit the current through individual channels. With few DAC channels than the electrodes, the current through individual electrodes may increase for lower impedance channels.

In some implementations, a single current-steering DAC with a scaled-down least significant bit (LSB) current value is used to generate a master bias current. In these implementations, no current may be wasted in the current mirrors. After the master bias current is generated, the DAC current is then mirrored to individual electrodes with a current mirror ratio of 1:N. Here, mirrored to individual electrodes generally refers to connected via current mirrors to individual electrodes. N can be selected based on current-steering DAC matching requirements. For example, N can be in the range of 10. The LSB size of the individual electrodes may be 100 uA. With 7-bits, full dynamic range of the driving current can be up to 12.7 mA.

The implementation depicted in FIG. **16**A shows a dual-DAC approach with mirrored current sources across eight (8) electrodes. Transistor gate **1603**A is a replicate of transistor gate **1603**B in the 1:1 transistor mirror. Digital to Analog Conversion (DAC) circuit **1602**A represents a push DAC and may correspond to a current sink. Meanwhile, DAC **1602**B represents a pull DAC and may correspond to a current source. Logically, DAC **1602**A and DAC **1602**B may respectively correspond to DAC **1434**A and DAC **1434**B as depicted in FIG. **14**. To reduce current mirror mismatches and wasted current, an N-side, current-sink DAC is used for this application. In this configuration, individual channels are enabled with complementary signals. Specifically, channel **0** is enabled by complementary transistors **1604**A (for CH**0** positive) and **1604**B (for CH**0** negative). Transistor gate **1604**A is coupled to Vrect **1417** while transistor gate **1604**B is coupled to VDD **1418**. Circuit **1605** represents the tissue load on channel **0** as well as DC blocking capacitors. In some implementations, the tissue load of channel **0** may include a capacitive component in addition to the resistance component. Likewise, complementary transistors **1606**A and **1606**B respectively represent the positive and negative polarity arrangements for driving tissue load **1607** for channel **1**. This implementation depicts an 8-side, current-sink DAC configuration in which the current mirroring is replicated for each channel of the 8-channel electrode lead coupled to. For example, channel **7** driving arrangements are represented by complementary transistors **1608**A and **1608**B as well as tissue load **1608**, as shown in FIG. **16**A. Notably, in this N-side implementation, three states can be configured for each of the current sinks, namely, controlled (mirrored) current sink mode, a cutoff device (off mode), and turned-on device as a triode mode switch. As depicted, each channel further includes an ON switch. For example channel **0** includes a CH**0**_ON switch, while channel **1** and channel **7** respectively include CH**1**_ON and CH**7**_ON switches.

Based on this model, a variety of electrical signal parameters can be modeled before an ASIC chip is fabricated. In one example, denoting stimulating waveform after rectification as Vstim, FIG. **16**B shows the expected Vstim waveform (on channel **1**) and RF input signal (on channel **2**). As demonstrated, a great deal of detailed performance can be simulated during the design stage.

FIG. **17** provides an example timing of waveforms in the above implementation. Trace **1712** shows the stimulation portion of a rectified RF input signal as seen on switch $CH0_N$, while trace **1714**A shows the waveform seen on switch $\overline{CH0}_N$ and trace **1714**B shows the waveform seen on switch CH**0**_ON. The ON resistance of the triode mode may not be critical, since it is on during reverse discharge, and not during stimulus mode.

Current steering as implemented (one current source and eight mirrors) may limit the charge per phase such that electrical impulses are applied for stimulation within safety ranges. In some implementations, the external transmitter may prescribe a limit on pulse width and the serial-written current level of the amplitude. With these parameters prescribed (or capped), a patient user is prevented from requesting an unsafe charge per phase because the patient user has limited parameter selection choices. In these implementations, when the stimulus portion is not present in the rectified RF input signal, the current DACs may be inactive.

To prevent a single electrode from sourcing or sinking more than the acceptable charge per phase, a current control approach can be used for both high and low sides. In the current steering stimulus approach, high side is a single current source DAC connected to Vrect voltage with current mirrors for each electrode. The low side is a current sink DAC. Each current steering DAC may include a 7-bit converter. Because a LSB corresponds to 100 μA, the maximum current can be limited to 12.7 mA per electrode. The master current reference for the DAC can be derived from Vrect. Following-current mirrors can be taken from Vrect. A similar approach on the low side can be used to prevent a single electrode from sinking too much charge.

A number of implementations have been described. Nevertheless, it will be understood that various modifications may be made. Accordingly, other implementations are within the scope of the following claims.

What is claimed is:

1. An integrated circuit for an implantable wirelessly powered device for implantation in a patient's body, the circuit comprising:

a radio-frequency (RF) to direct current (DC) rectifying circuit coupled to one or more antenna on the implantable wirelessly powered device, the rectifying circuit configured to:

rectify an input RF signal received non-inductively at the one or more antennas and from an external controller through electric radiative coupling; and

extract DC electric power and configuration data from the input RF signal;

a logic control circuit connected to the rectifying circuit and a driving circuit that is coupled to two or more electrodes, the logic control circuit configured to:

generate a current for the driving circuit solely using the extracted DC electrical power; and

in accordance with the extracted configuration data, set polarity state information for each of the two or more electrodes; and

a driving circuit coupled to the two or more electrodes, the driving circuit comprising current mirrors and configured to:

steer, to each of the two or more electrodes and via the current mirrors, a stimulating current solely from the generated current to modulate neural tissue within the patient's body such that the two or more electrodes conduct stimulating currents of substantially identical amplitude when activated to apply stimulation to neural tissue.

2. The integrated circuit of claim **1**, wherein the driving circuit comprises: a current source digital to analog circuit (DAC) and a current sink digital to analog circuit (DAC), the current source DAC and the current sink DAC are complementary to each other and both are connected to each electrode via the current mirrors wherein the stimulating current at each of the two or more electrodes is determined by a current mirror ratio and wherein the configuration data comprises the current mirror ratio.

3. The integrated circuit of claim **2**, wherein the current mirror ratio matches the number of electrodes.

4. The integrated circuit of claim **1**, wherein the driving circuit comprises: a switch bank configured to control a polarity state for each electrode.

5. The integrated circuit of claim **1**, wherein the driving circuit comprises:

a variable shunt resistor adapted to reduce a ripple on the electrode connected thereto when the stimulating current has just ended.

6. The integrated circuit of claim **1**, further comprising: a discharge delay timer to delay the onset of capacitors coupled to each of the electrodes.

7. The integrated circuit of claim **1**, further comprising: a power on reset (PoR) circuit to maintain default state information for each electrode and default parameters for the stimulating current for each electrode, the PoR circuit configured to be trigged on by a rising edge of the input RF signal and turned off by a falling edge of the input RF signal.

8. The integrated circuit of claim **1**, further comprising: one or more address control bits, configurable as a logic address of the implantable device wirelessly powered by the extracted electric power.

9. The integrated circuit of claim **1**, wherein the rectifying circuit comprises a diode bridge.

10. The integrated circuit of claim **1**, wherein the rectifying circuit is coupled to a differential antenna on the implantable wirelessly powered device, wherein said two or more antenna comprises a differential antenna.

11. The integrated circuit of claim **1**, wherein the rectifying circuit comprises: an amplitude modulation (AM) detection circuit to extract electric power and configuration data from the input RF signal received non-inductively at the one or more antennas.

12. The integrated circuit of claim **1**, wherein the logic control circuit comprises: a state machine to record state information for each electrode based on the extracted configuration data, the configuration data including polarity setting for each electrode.

13. The integrated circuit of claim **1**, wherein the logic control circuit is further configured to set polarity state for each electrode during a communication initialization pulse.

14. The integrated circuit of claim **1**, wherein the logic control circuit comprises a timer circuit to control a duration the generated current for the driving circuit.

* * * * *