US009596001B2

(12) United States Patent
Gerszberg et al.

(10) **Patent No.: US 9,596,001 B2**
(45) **Date of Patent: Mar. 14, 2017**

(54) **APPARATUS FOR PROVIDING COMMUNICATION SERVICES AND METHODS THEREOF**

(71) Applicant: **AT&T INTELLECTUAL PROPERTY I, LP**, Atlanta, GA (US)

(72) Inventors: **Irwin Gerszberg**, Kendall Park, NJ (US); **Farhad Barzegar**, Branchburg, NJ (US); **Paul Shala Henry**, Holmdel, NJ (US); **Robert Bennett**, Southold, NY (US); **Donald J Barnickel**, Flemington, NJ (US); **Thomas M. Willis, III**, Tinton Falls, NJ (US)

(73) Assignee: **AT&T INTELLECTUAL PROPERTY I, L.P.**, Atlanta, GA (US)

(*) Notice: Subject to any disclaimer, the term of this patent is extended or adjusted under 35 U.S.C. 154(b) by 0 days.

(21) Appl. No.: **15/176,212**

(22) Filed: **Jun. 8, 2016**

(65) **Prior Publication Data**

US 2016/0294444 A1 Oct. 6, 2016

Related U.S. Application Data

(63) Continuation of application No. 14/519,388, filed on Oct. 21, 2014.

(51) **Int. Cl.**
H04B 10/00 (2013.01)
H04B 3/54 (2006.01)
(Continued)

(52) **U.S. Cl.**
CPC ***H04B 3/54*** (2013.01); ***H01Q 1/50*** (2013.01); ***H04L 27/26*** (2013.01)

(58) **Field of Classification Search**
CPC . H04B 10/90; H04B 3/52; H04B 3/54; H04B 3/56
See application file for complete search history.

(56) **References Cited**

U.S. PATENT DOCUMENTS

529,290 A 11/1894 Harry et al.
1,721,785 A 7/1929 Meyer
(Continued)

FOREIGN PATENT DOCUMENTS

AL 2009004986 A 1/2009
AU 565039 B2 9/1987
(Continued)

OTHER PUBLICATIONS

International Search Report and Written Opinion in PCT/US2016/028417, mailed Jul. 5, 2016, 13 pages, Authorized officer Brigitte Bettiol.

(Continued)

Primary Examiner — Daniel Dobson
(74) *Attorney, Agent, or Firm* — Guntin & Gust, PLC; Ed Guntin

(57) **ABSTRACT**

Aspects of the subject disclosure may include, for example, a system for modulating a first electrical signal to generate first modulated electromagnetic waves, and transmitting the first modulated electromagnetic waves on a waveguide located in proximity to a transmission medium. In one embodiment, the first electromagnetic waves can induce second electromagnetic waves that propagate on an outer surface of the transmission medium. The second electromagnetic waves can have a first spectral range that is divided into, contains or otherwise includes a first control channel and a first plurality of bands. Other embodiments are disclosed.

20 Claims, 24 Drawing Sheets

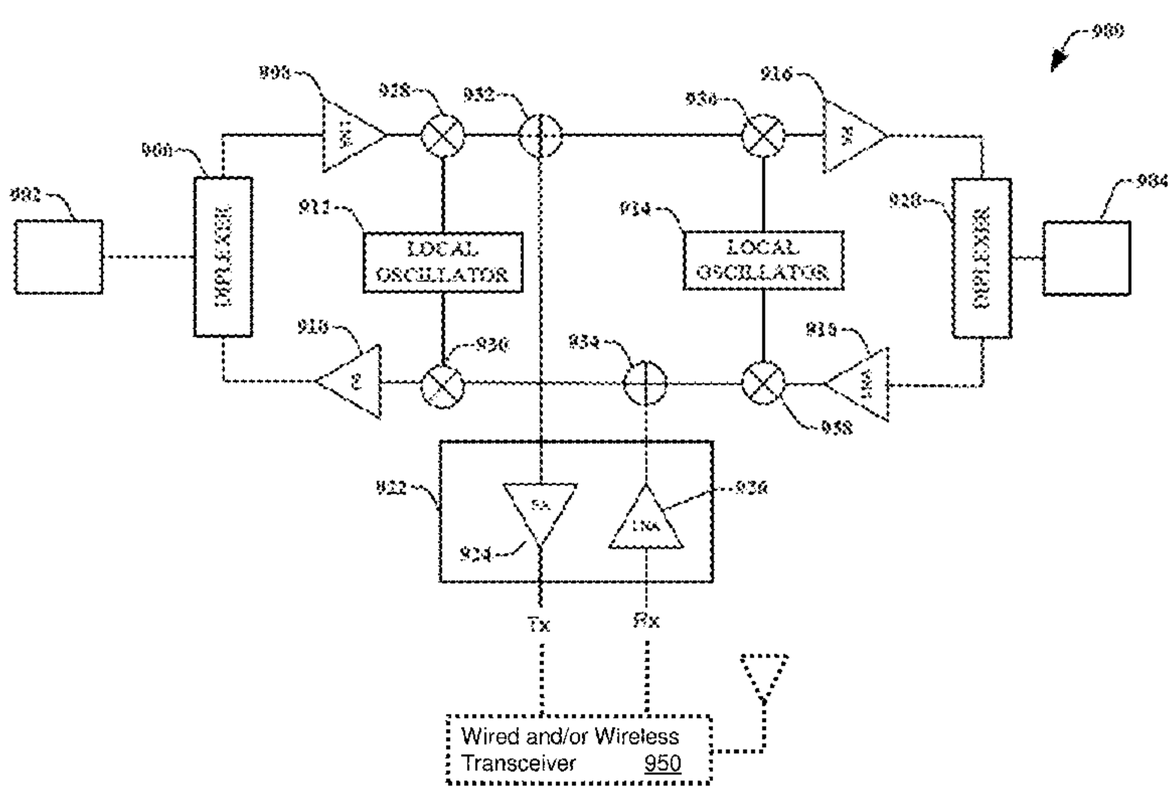

(51) **Int. Cl.**

H01Q 1/50	(2006.01)
H04L 27/26	(2006.01)
H04J 14/00	(2006.01)

(56) **References Cited**

U.S. PATENT DOCUMENTS

1,860,123	A	5/1932	Yagi
2,129,711	A	9/1938	Southworth
2,147,717	A	2/1939	Schelkunoff
2,187,908	A	1/1940	McCreary
2,199,083	A	4/1940	Schelkunoff
2,232,179	A	2/1941	King
2,283,935	A	5/1942	King
2,398,095	A	4/1946	Katzin
2,402,622	A	6/1946	Hansen
2,407,068	A	9/1946	Fiske et al.
2,407,069	A	9/1946	Fiske
2,411,338	A	11/1946	Roberts
2,415,089	A	2/1947	Feldman et al.
2,415,807	A	2/1947	Barrow et al.
2,420,007	A	5/1947	Olden
2,422,058	A	6/1947	Whinnery
2,432,134	A	12/1947	Bagnall
2,461,005	A	2/1949	Southworth
2,471,021	A	5/1949	Bradley
2,488,400	A	11/1949	Harder
2,513,205	A	6/1950	Roberts et al.
2,514,679	A	7/1950	Southworth
2,519,603	A	8/1950	Reber
2,540,839	A	2/1951	Southworth
2,542,980	A	2/1951	Barrow
2,557,110	A	6/1951	Jaynes
2,562,281	A	7/1951	Mumford
2,596,190	A	5/1952	Wiley
2,599,864	A	6/1952	Robertson-Shersby-Ha et al.
2,677,055	A	4/1954	Allen
2,685,068	A	7/1954	Goubau
2,688,732	A	9/1954	Kock
2,691,766	A	10/1954	Clapp
2,706,279	A	4/1955	Aron
2,711,514	A	6/1955	Rines
2,723,378	A	11/1955	Clavier et al.
2,727,232	A	12/1955	Pryga
2,740,826	A	4/1956	Bondon
2,745,101	A	5/1956	Marie
2,748,350	A	5/1956	Miller et al.
2,749,545	A	6/1956	Kostriza
2,754,513	A	7/1956	Goubau
2,761,137	A	8/1956	Atta et al.
2,769,147	A	10/1956	Black et al.
2,794,959	A	6/1957	Fox
2,805,415	A	9/1957	Berkowitz
2,806,972	A	9/1957	Sensiper
2,810,111	A	10/1957	Cohn
2,819,451	A	1/1958	Sims et al.
2,820,083	A	1/1958	Hendrix
2,835,871	A	5/1958	Raabe
2,867,776	A	1/1959	Wilkinson, Jr.
2,912,695	A	11/1959	Cutler
2,914,741	A	11/1959	Unger
2,921,277	A	1/1960	Goubau
2,949,589	A	8/1960	Hafner
2,960,670	A	11/1960	Marcatili et al.
2,972,148	A	2/1961	Rupp et al.
2,974,297	A	3/1961	Ros
2,993,205	A	7/1961	Cooper et al.
3,040,278	A	6/1962	Griemsmann et al.
3,072,870	A	1/1963	Walker
3,101,472	A	8/1963	Goubau
3,109,175	A	10/1963	Lloyd
3,129,356	A	4/1964	Philips
3,134,951	A	5/1964	Huber et al.
3,146,297	A	8/1964	Hahne
3,146,453	A	8/1964	Hagaman
3,201,724	A	8/1965	Hafner
3,218,384	A	11/1965	Shaw
3,234,559	A	2/1966	Bartholoma et al.
3,255,454	A	6/1966	Walter et al.
3,296,364	A	1/1967	Jefferson et al.
3,296,685	A	1/1967	Menahem et al.
3,316,344	A	4/1967	Toms et al.
3,316,345	A	4/1967	Toms et al.
3,321,763	A	5/1967	Ikrath et al.
3,329,958	A	7/1967	Anderson et al.
3,389,394	A	6/1968	Lewis et al.
3,392,388	A	7/1968	Tsuneo et al.
3,392,395	A	7/1968	Hannan
3,411,112	A	11/1968	Honig et al.
3,413,642	A	11/1968	Cook
3,414,903	A	12/1968	Bartlett et al.
3,420,596	A	1/1969	Osterberg
3,427,573	A	2/1969	White et al.
3,448,455	A	6/1969	Alfandari et al.
3,459,873	A	8/1969	Harris et al.
3,487,158	A	12/1969	Killian
3,500,422	A	3/1970	Grady et al.
3,509,463	A	4/1970	Woodward et al.
3,522,560	A	8/1970	Hayany
3,524,192	A	8/1970	Sakiotis et al.
3,529,205	A	9/1970	Miller
3,530,481	A	9/1970	Tanaka et al.
3,531,803	A	9/1970	Hudspeth et al.
3,555,553	A	1/1971	Boyns
3,557,341	A	1/1971	Sochilin et al.
3,588,754	A	6/1971	Theodore
3,589,121	A	6/1971	Mulvey
3,603,904	A	9/1971	Theodore
3,609,247	A	9/1971	Halstead
3,623,114	A	11/1971	Seaton
3,668,459	A	6/1972	Symons et al.
3,668,574	A	6/1972	Barlow
3,672,202	A	6/1972	Barber et al.
3,686,596	A	8/1972	Thomas
3,699,574	A	10/1972	Plunk et al.
3,725,937	A	4/1973	Schreiber
3,772,528	A	11/1973	Anderson et al.
3,806,931	A	4/1974	Wright
3,833,909	A	9/1974	Schaufelberger
3,835,407	A	9/1974	Yariv et al.
3,845,426	A	10/1974	Barlow
3,896,380	A	7/1975	Martin
3,935,577	A	1/1976	Hansen et al.
3,936,838	A	2/1976	Foldes et al.
3,959,794	A	5/1976	Chrepta et al.
4,010,799	A	3/1977	Kern et al.
4,020,431	A	4/1977	Saunders
4,026,632	A	5/1977	Hill et al.
4,030,048	A	6/1977	Foldes et al.
4,035,054	A	7/1977	Lattanzi et al.
4,047,180	A	9/1977	Kuo et al.
4,080,600	A	3/1978	Toman et al.
4,123,759	A	10/1978	Hines et al.
4,125,768	A	11/1978	Jackson et al.
4,149,170	A	4/1979	Campbell et al.
4,156,241	A	5/1979	Mobley et al.
4,175,257	A	11/1979	Smith et al.
4,188,595	A	2/1980	Cronson et al.
4,190,137	A	2/1980	Shimada et al.
4,195,302	A	3/1980	Leupelt et al.
4,210,357	A	7/1980	Adachi et al.
4,216,449	A	8/1980	Kach
4,234,753	A	11/1980	Clutter
4,238,974	A	12/1980	Fawcett et al.
4,246,584	A	1/1981	Noerpel et al.
4,274,097	A	6/1981	Krall et al.
4,278,955	A	7/1981	Lunden et al.
4,293,833	A	10/1981	Popa et al.
4,307,938	A	12/1981	Dyott et al.
4,316,646	A	2/1982	Siebens et al.
4,319,074	A	3/1982	Yaste et al.
4,329,690	A	5/1982	Parker et al.
4,333,082	A	6/1982	Susman et al.
4,336,719	A	6/1982	Lynnworth
4,345,256	A	8/1982	Rainwater et al.

(56) **References Cited**

U.S. PATENT DOCUMENTS

4,366,565 A 12/1982 Herskowitz
4,367,446 A 1/1983 Hall et al.
4,378,143 A 3/1983 Winzer et al.
4,384,289 A 5/1983 Fernandes et al.
4,398,058 A 8/1983 Gerth et al.
4,398,121 A 8/1983 Chodorow et al.
4,447,811 A 5/1984 Hamid et al.
4,463,329 A 7/1984 Suzuki et al.
4,482,899 A 11/1984 Dragone et al.
4,488,156 A 12/1984 DuFort et al.
4,491,386 A 1/1985 Negishi et al.
4,525,432 A 6/1985 Saito et al.
4,533,875 A 8/1985 Lau et al.
4,541,303 A 9/1985 Kuzunishi et al.
4,550,271 A 10/1985 Lau et al.
4,553,112 A 11/1985 Saad et al.
4,556,271 A 12/1985 Hubbard
4,558,325 A 12/1985 Stroem et al.
4,566,012 A 1/1986 Choung et al.
4,567,401 A 1/1986 Barnett et al.
4,573,215 A 2/1986 Oates et al.
4,598,262 A 7/1986 Chen et al.
4,604,627 A 8/1986 Saad et al.
4,636,753 A 1/1987 Geller et al.
4,641,916 A 2/1987 Oestreich et al.
4,660,050 A 4/1987 Phillips et al.
4,665,660 A 5/1987 Krall et al.
4,680,558 A 7/1987 Ghosh et al.
4,694,599 A 9/1987 Hart et al.
4,704,611 A 11/1987 Edwards et al.
4,715,695 A 12/1987 Nishimura et al.
4,717,974 A 1/1988 Baumeister et al.
4,730,172 A 3/1988 Bengeult
4,730,888 A 3/1988 Darcie et al.
4,731,810 A 3/1988 Watkins
4,735,097 A 4/1988 Lynnworth et al.
4,743,916 A 5/1988 Bengeult
4,745,377 A 5/1988 Stern et al.
4,746,241 A 5/1988 Burbank, III et al.
4,749,244 A 6/1988 Luh
4,758,962 A 7/1988 Fernandes
4,764,738 A 8/1988 Fried et al.
4,772,891 A 9/1988 Svy
4,777,457 A 10/1988 Ghosh et al.
4,786,913 A 11/1988 Barendregt et al.
4,788,553 A 11/1988 Phillips et al.
4,792,771 A 12/1988 Siu et al.
4,792,812 A 12/1988 Rinehart et al.
4,799,031 A 1/1989 Lang et al.
4,801,937 A 1/1989 Fernandes
4,818,963 A 4/1989 Green et al.
4,818,990 A 4/1989 Fernandes
4,829,310 A 5/1989 Losee et al.
4,829,314 A 5/1989 Barbier et al.
4,831,346 A 5/1989 Brooker et al.
4,832,148 A 5/1989 Becker et al.
4,835,517 A 5/1989 Van et al.
4,845,508 A 7/1989 Krall et al.
4,849,611 A 7/1989 Whitney et al.
4,851,788 A 7/1989 Ives et al.
4,873,534 A 10/1989 Wohlleben et al.
4,879,544 A 11/1989 Maki et al.
4,881,028 A 11/1989 Bright et al.
4,886,980 A 12/1989 Fernandes et al.
4,897,663 A 1/1990 Kusano et al.
4,904,996 A 2/1990 Fernandes
4,915,468 A 4/1990 Kim et al.
4,929,962 A 5/1990 Begout et al.
4,931,808 A 6/1990 Munson et al.
4,946,202 A 8/1990 Perricone et al.
4,977,618 A 12/1990 Allen
5,006,846 A 4/1991 Granville et al.
5,015,914 A 5/1991 Ives et al.
5,017,936 A 5/1991 Massey et al.
5,017,937 A 5/1991 Newham et al.
5,019,832 A 5/1991 Ekdahl et al.
5,042,903 A 8/1991 Jakubowski et al.
5,043,538 A 8/1991 Hughey et al.
5,043,629 A 8/1991 Doane et al.
5,044,722 A 9/1991 Voser et al.
5,045,820 A 9/1991 Oehlerking et al.
5,072,228 A 12/1991 Kuwahara et al.
5,082,349 A 1/1992 Cordova-Plaza et al.
5,086,467 A 2/1992 Malek
5,107,231 A 4/1992 Knox et al.
5,109,232 A 4/1992 Monte et al.
5,117,237 A 5/1992 Legg
5,126,750 A 6/1992 Wang et al.
5,132,968 A 7/1992 Cephus
5,134,251 A 7/1992 Martin et al.
5,134,965 A 8/1992 Tokuda et al.
5,142,767 A 9/1992 Adams et al.
5,148,509 A 9/1992 Kannabiran et al.
5,153,676 A 10/1992 Bergh et al.
5,166,698 A 11/1992 Ashbaugh et al.
5,174,164 A 12/1992 Wilheim et al.
5,182,427 A 1/1993 McGaffigan et al.
5,187,409 A 2/1993 Ito et al.
5,198,823 A 3/1993 Litchford et al.
5,212,755 A 5/1993 Holmberg et al.
5,214,394 A 5/1993 Wong et al.
5,235,662 A 8/1993 Prince et al.
5,248,876 A 9/1993 Kerstens et al.
5,254,809 A 10/1993 Martin
5,265,266 A 11/1993 Trinh
5,266,961 A 11/1993 Milroy et al.
5,276,455 A 1/1994 Fitzsimmons et al.
5,278,687 A 1/1994 Jannson et al.
5,291,211 A 3/1994 Tropper et al.
5,304,999 A 4/1994 Roberts et al.
5,311,596 A 5/1994 Scott et al.
5,329,285 A 7/1994 McCandless et al.
5,341,088 A 8/1994 Davis
5,345,522 A 9/1994 Vali et al.
5,371,623 A 12/1994 Eastmond et al.
5,380,224 A 1/1995 DiCicco
5,389,442 A 2/1995 Kathiresan et al.
5,410,318 A 4/1995 Wong et al.
5,412,654 A 5/1995 Perkins
5,428,818 A 6/1995 Meidan et al.
5,434,575 A 7/1995 Jelinek et al.
5,440,660 A 8/1995 Dombrowski et al.
5,479,176 A 12/1995 Zavrel et al.
5,481,268 A 1/1996 Higgins
5,482,525 A 1/1996 Kajioka et al.
5,486,839 A 1/1996 Rodeffer et al.
5,488,380 A 1/1996 Harvey et al.
5,495,546 A 2/1996 Bottoms et al.
5,499,308 A 3/1996 Arai et al.
5,499,311 A 3/1996 DeCusatis et al.
5,512,906 A 4/1996 Speciale et al.
5,513,176 A 4/1996 Dean et al.
5,515,059 A 5/1996 How et al.
5,528,208 A 6/1996 Kobayashi et al.
5,543,000 A 8/1996 Lique
5,559,359 A 9/1996 Reyes
5,566,022 A 10/1996 Segev
5,566,196 A 10/1996 Scifres
5,592,183 A 1/1997 Henf
5,603,089 A 2/1997 Searle et al.
5,619,015 A 4/1997 Kirma
5,630,223 A 5/1997 Bahu et al.
5,637,521 A 6/1997 Rhodes et al.
5,640,168 A 6/1997 Heger et al.
5,650,788 A 7/1997 Jha
5,652,554 A 7/1997 Krieg et al.
5,671,304 A 9/1997 Duguay
5,677,909 A 10/1997 Heide
5,684,495 A 11/1997 Dyott et al.
5,724,168 A 3/1998 Oschmann et al.
5,757,323 A 5/1998 Spencer et al.
5,784,033 A 7/1998 Boldissar, Jr. et al.
5,784,683 A 7/1998 Sistanizadeh et al.
5,793,334 A 8/1998 Harrison et al.

(56) **References Cited**

U.S. PATENT DOCUMENTS

5,805,983 A 9/1998 Naidu et al.
5,818,396 A 10/1998 Harrison et al.
5,818,512 A 10/1998 Fuller
5,850,199 A 12/1998 Wan et al.
5,854,608 A 12/1998 Leisten
5,861,843 A 1/1999 Sorace et al.
5,867,763 A 2/1999 Dean et al.
5,870,060 A 2/1999 Chen et al.
5,873,324 A 2/1999 Kaddas et al.
5,890,055 A 3/1999 Chu et al.
5,898,133 A 4/1999 Bleich et al.
5,898,830 A 4/1999 Wesinger, Jr. et al.
5,900,847 A 5/1999 Ishikawa et al.
5,903,373 A 5/1999 Welch et al.
5,905,949 A 5/1999 Hawkes et al.
5,917,977 A 6/1999 Barrett et al.
5,926,128 A 7/1999 Brash et al.
5,936,589 A 8/1999 Kawahata
5,948,044 A 9/1999 Varley et al.
5,952,964 A 9/1999 Chan et al.
5,952,972 A 9/1999 Ittipiboon et al.
5,952,984 A 9/1999 Kuramoto et al.
5,977,650 A 11/1999 Rickard et al.
5,982,276 A 11/1999 Stewart
5,986,331 A 11/1999 Letavic et al.
5,994,984 A 11/1999 Stancil et al.
5,994,998 A 11/1999 Fisher et al.
6,005,758 A 12/1999 Spencer et al.
6,011,520 A 1/2000 Howell et al.
6,011,524 A 1/2000 Jervis et al.
6,014,110 A 1/2000 Bridges et al.
6,023,619 A 2/2000 Kaminsky
6,026,208 A 2/2000 Will et al.
6,026,331 A 2/2000 Feldberg et al.
6,037,894 A 3/2000 Pfizenmaier et al.
6,038,425 A 3/2000 Jeffrey et al.
6,049,647 A 4/2000 Register et al.
6,063,234 A 5/2000 Chen et al.
6,078,297 A 6/2000 Kormanyos et al.
6,088,001 A 7/2000 Burger et al.
6,100,846 A 8/2000 Li et al.
6,103,031 A 8/2000 Aeschbacher et al.
6,107,897 A 8/2000 Hewett et al.
6,114,998 A 9/2000 Schefte et al.
6,140,911 A 10/2000 Fisher et al.
6,140,976 A 10/2000 Locke et al.
6,150,612 A 11/2000 Grandy et al.
6,151,145 A 11/2000 Srivastava et al.
6,154,488 A 11/2000 Hunt
6,158,383 A 12/2000 Watanabe et al.
6,166,694 A 12/2000 Ying et al.
6,167,055 A 12/2000 Ganek et al.
6,184,828 B1 2/2001 Shoki et al.
6,195,058 B1 2/2001 Nakamura et al.
6,195,395 B1 2/2001 Frodsham et al.
6,208,161 B1 3/2001 Suda et al.
6,211,836 B1 4/2001 Manasson et al.
6,211,837 B1 4/2001 Crouch et al.
6,222,503 B1 4/2001 Gietema et al.
6,225,960 B1 5/2001 Collins et al.
6,229,327 B1 5/2001 Boll et al.
6,239,377 B1 5/2001 Nishikawa et al.
6,239,379 B1 5/2001 Cotter et al.
6,246,821 B1 6/2001 Hemken et al.
6,259,337 B1 7/2001 Wen et al.
6,266,016 B1 7/2001 Bergstedt et al.
6,266,025 B1 7/2001 Popa et al.
6,271,790 B2 8/2001 Smith et al.
6,271,952 B1 8/2001 Epworth et al.
6,278,357 B1 8/2001 Croushore et al.
6,281,855 B1 8/2001 Aoki et al.
6,282,354 B1 8/2001 Jones et al.
6,292,139 B1 9/2001 Yamamoto et al.
6,292,143 B1 9/2001 Romanofsky et al.
6,301,420 B1 10/2001 Greenaway et al.
6,323,819 B1 11/2001 Ergene et al.
6,329,959 B1 12/2001 Varadan et al.
6,348,683 B1 2/2002 Verghese et al.
6,351,247 B1 2/2002 Linstrom et al.
6,362,789 B1 3/2002 Trumbull et al.
6,366,238 B1 4/2002 DeMore et al.
6,396,440 B1 5/2002 Chen et al.
6,404,773 B1 6/2002 Williams et al.
6,421,021 B1 7/2002 Rupp et al.
6,433,736 B1 8/2002 Timothy et al.
6,433,741 B2 8/2002 Tanizaki et al.
6,436,536 B2 8/2002 Peruzzotti et al.
6,445,774 B1 9/2002 Kidder et al.
6,452,467 B1 9/2002 McEwan
6,452,923 B1 9/2002 Gerszberg et al.
6,455,769 B1 9/2002 Belli et al.
6,456,251 B1 9/2002 Rao et al.
6,462,700 B1 10/2002 Schmidt et al.
6,463,295 B1 10/2002 Yun et al.
6,469,676 B1 10/2002 Fehrenbach et al.
6,483,470 B1 11/2002 Hohnstein et al.
6,489,928 B2 12/2002 Sakurada
6,501,433 B2 12/2002 Popa et al.
6,510,152 B1 1/2003 Gerszberg et al.
6,515,635 B2 2/2003 Chiang et al.
6,522,305 B2 2/2003 Sharman et al.
6,531,991 B2 3/2003 Adachi et al.
6,542,739 B1 4/2003 Garner
6,549,106 B2 4/2003 Martin et al.
6,549,173 B1 4/2003 King et al.
6,552,693 B1 4/2003 Leisten et al.
6,563,981 B2 5/2003 Weisberg et al.
6,567,573 B1 5/2003 Domash et al.
6,573,813 B1 6/2003 Joannopoulos et al.
6,580,295 B2 6/2003 Takekuma et al.
6,584,084 B1 6/2003 Barany et al.
6,584,252 B1 6/2003 Schier et al.
6,587,077 B2 7/2003 Vail et al.
6,596,944 B1 7/2003 Clark et al.
6,606,066 B1 8/2003 Fawcett et al.
6,606,077 B2 8/2003 Ebling et al.
6,631,229 B1 10/2003 Norris et al.
6,639,566 B2 10/2003 Knop et al.
6,650,296 B2 11/2003 Wong et al.
6,653,598 B2 11/2003 Sullivan et al.
6,659,655 B2 12/2003 Dair et al.
6,671,824 B1 12/2003 Hyland et al.
6,677,899 B1 1/2004 Lee et al.
6,683,580 B2 1/2004 Kuramoto
6,686,832 B2 2/2004 Abraham et al.
6,686,873 B2 2/2004 Patel et al.
6,686,875 B1 2/2004 Wolfson et al.
6,697,030 B2 2/2004 Gleener
6,703,981 B2 3/2004 Meitzler et al.
6,714,165 B2 3/2004 Verstraeten
6,725,035 B2 4/2004 Jochim et al.
6,727,470 B2 4/2004 Reichle et al.
6,731,649 B1 5/2004 Silverman
6,741,705 B1 5/2004 Nelson et al.
6,750,827 B2 6/2004 Manasson et al.
6,756,538 B1 6/2004 Murga-Gonzalez et al.
6,765,479 B2 7/2004 Stewart et al.
6,768,456 B1 7/2004 Lalezari et al.
6,768,471 B2 7/2004 Bostwick et al.
6,768,474 B2 7/2004 Hunt et al.
6,771,216 B2 8/2004 Patel et al.
6,771,225 B2 8/2004 Tits et al.
6,771,739 B1 8/2004 Beamon et al.
6,788,865 B2 9/2004 Kawanishi et al.
6,788,951 B2 9/2004 Aoki et al.
6,789,119 B1 9/2004 Zhu et al.
6,812,895 B2 11/2004 Anderson et al.
6,822,615 B2 11/2004 Quan et al.
6,839,846 B2 1/2005 Mangold et al.
6,842,157 B2 1/2005 Phelan et al.
6,842,430 B1 1/2005 Melnik et al.
6,850,128 B2 2/2005 Park
6,859,185 B2 2/2005 Royalty et al.
6,859,187 B2 2/2005 Ohlsson et al.

(56) **References Cited**

U.S. PATENT DOCUMENTS

6,859,590 B1 2/2005 Zaccone
6,867,744 B2 3/2005 Toncich et al.
6,868,258 B2 3/2005 Hayata et al.
6,870,465 B1 3/2005 Song et al.
6,885,674 B2 4/2005 Hunt et al.
6,886,065 B2 4/2005 Sides et al.
6,888,623 B2 5/2005 Clements
6,901,064 B2 5/2005 Billhartz et al.
6,904,218 B2 6/2005 Sun et al.
6,906,676 B2 6/2005 Killen et al.
6,906,681 B2 6/2005 Hoppenstein et al.
6,909,893 B2 6/2005 Aoki et al.
6,917,974 B1 7/2005 Stytz et al.
6,920,289 B2 7/2005 Zimmerman et al.
6,922,135 B2 7/2005 Abraham et al.
6,934,655 B2 8/2005 Jones et al.
6,937,595 B2 8/2005 Barzegar et al.
6,944,555 B2 9/2005 Blackett et al.
6,947,635 B2 9/2005 Kohns et al.
6,950,567 B2 9/2005 Kline et al.
6,958,729 B1 10/2005 Metz et al.
6,965,302 B2 11/2005 Mollenkopf et al.
6,965,355 B1 11/2005 Durham et al.
6,970,502 B2 11/2005 Kim et al.
6,972,729 B2 12/2005 Wang et al.
6,980,091 B2 12/2005 White, II et al.
6,982,611 B2 1/2006 Cope et al.
6,982,679 B2 1/2006 Kralovec et al.
6,983,174 B2 1/2006 Hoppenstein et al.
6,985,118 B2 1/2006 Killen et al.
6,992,639 B1 1/2006 Lier et al.
6,999,667 B2 2/2006 Jang et al.
7,008,120 B2 3/2006 Zaborsky et al.
7,009,471 B2 3/2006 Elmore
7,012,489 B2 3/2006 Fisher et al.
7,012,572 B1 3/2006 Schaffner et al.
7,016,585 B2 3/2006 Diggle, III et al.
7,019,704 B2 3/2006 Weiss et al.
7,023,400 B2 4/2006 Hill et al.
7,027,003 B2 4/2006 Sasaki et al.
7,032,016 B2 4/2006 Cerami et al.
7,039,048 B1 5/2006 Monta et al.
7,042,403 B2 5/2006 Sievenpiper et al.
7,042,416 B2 5/2006 Kingsley et al.
7,042,420 B2 5/2006 Ebling et al.
7,054,286 B2 5/2006 Ertel et al.
7,054,376 B1 5/2006 Rubinstain et al.
7,054,513 B2 5/2006 Herz et al.
7,055,148 B2 5/2006 Marsh et al.
7,061,370 B2 6/2006 Cern et al.
7,068,998 B2 6/2006 Zavidniak et al.
7,075,496 B2 7/2006 Hidai et al.
7,082,321 B2 7/2006 Kuwahara et al.
7,098,405 B2 8/2006 Glew et al.
7,098,773 B2 8/2006 Berkman et al.
7,102,581 B1 9/2006 West et al.
7,106,265 B2 9/2006 Robertson et al.
7,113,002 B2 9/2006 Otsuka et al.
7,113,134 B1 9/2006 Berkman et al.
7,119,755 B2 10/2006 Harvey et al.
7,120,345 B2 10/2006 Naitou et al.
7,123,801 B2 10/2006 Fitz et al.
7,126,711 B2 10/2006 Fruth
7,130,516 B2 10/2006 Wu et al.
7,132,950 B2 11/2006 Stewart et al.
7,133,930 B2 11/2006 Sabio et al.
7,134,012 B2 11/2006 Doyle et al.
7,134,135 B2 11/2006 Cerami et al.
7,136,397 B2 11/2006 Sharma et al.
7,137,605 B1 11/2006 Guertler et al.
7,138,767 B2 11/2006 Chen et al.
7,145,440 B2 12/2006 Gerszberg et al.
7,151,497 B2 12/2006 Crystal et al.
7,161,934 B2 1/2007 Buchsbaum et al.
7,167,139 B2 1/2007 Kim et al.
7,171,087 B2 1/2007 Takahashi et al.
7,171,493 B2 1/2007 Shu et al.
7,176,589 B2 2/2007 Rouquette et al.
7,180,459 B2 2/2007 Damini et al.
7,180,467 B2 2/2007 Fabrega-Sanchez
7,183,991 B2 2/2007 Bhattacharyya et al.
7,194,528 B1 3/2007 Davidow et al.
7,199,680 B2 4/2007 Fukunaga et al.
7,200,391 B2 4/2007 Chung et al.
7,200,658 B2 4/2007 Goeller et al.
7,205,950 B2 4/2007 Imai et al.
7,212,163 B2 5/2007 Huang et al.
7,215,220 B1 5/2007 Jia et al.
7,215,928 B2 5/2007 Gage et al.
7,218,285 B2 5/2007 Davis et al.
7,224,170 B2 5/2007 Graham et al.
7,224,243 B2 5/2007 Cope et al.
7,224,320 B2 5/2007 Cook et al.
7,228,123 B2 6/2007 Moursund et al.
7,234,413 B2 6/2007 Suzuki et al.
7,234,895 B2 6/2007 Richardson et al.
7,239,284 B1 7/2007 Staal et al.
7,243,610 B2 7/2007 Ishii et al.
7,248,148 B2 7/2007 Kline et al.
7,260,424 B2 8/2007 Schmidt et al.
7,266,154 B2 9/2007 Gundrum et al.
7,266,275 B2 9/2007 Hansen et al.
7,272,281 B2 9/2007 Stahulak et al.
7,274,305 B1 9/2007 Luttrell
7,276,990 B2 10/2007 Sievenpiper et al.
7,280,033 B2 10/2007 Berkman et al.
7,289,704 B1 10/2007 Wagman et al.
7,297,869 B2 11/2007 Hiller et al.
7,307,596 B1 12/2007 West et al.
7,308,370 B2 12/2007 Mason, Jr. et al.
7,310,335 B1 12/2007 Garcia-Luna-Aceves et al.
7,311,605 B2 12/2007 Moser
7,312,686 B2 12/2007 Bruno
7,313,312 B2 12/2007 Kimball et al.
7,315,678 B2 1/2008 Siegel
7,319,717 B2 1/2008 Zitting et al.
7,321,291 B2 1/2008 Gidge et al.
7,321,707 B2 1/2008 Noda et al.
7,324,046 B1 1/2008 Wu et al.
7,329,815 B2 2/2008 Johnston et al.
7,333,064 B1 2/2008 Timothy et al.
7,333,593 B2 2/2008 Beamon et al.
7,339,466 B2 3/2008 Mansfield et al.
7,339,897 B2 3/2008 Larsson et al.
7,340,768 B2 3/2008 Rosenberger et al.
7,345,623 B2 3/2008 McEwan et al.
7,346,244 B2 3/2008 Gowan et al.
7,346,359 B2 3/2008 Damarla et al.
7,355,560 B2 4/2008 Nagai et al.
7,358,808 B2 4/2008 Berkman et al.
7,369,085 B1 5/2008 Jacomb-Hood et al.
7,380,272 B2 5/2008 Sharp et al.
7,381,089 B2 6/2008 Hosler, Sr.
7,383,577 B2 6/2008 Hrastar et al.
7,388,450 B2 6/2008 Camiade et al.
7,397,422 B2 7/2008 Tekawy et al.
7,398,946 B1 7/2008 Marshall
7,406,337 B2 7/2008 Kim et al.
7,408,426 B2 8/2008 Broyde et al.
7,408,923 B1 8/2008 Khan et al.
7,417,587 B2 8/2008 Iskander et al.
7,418,178 B2 8/2008 Kudou et al.
7,420,474 B1 9/2008 Elks et al.
7,426,554 B2 9/2008 Kennedy et al.
7,430,257 B1 9/2008 Shattil et al.
7,430,932 B2 10/2008 Mekhanoshin et al.
7,443,334 B2 10/2008 Rees et al.
7,444,404 B2 10/2008 Wetherall et al.
7,446,567 B2 11/2008 Otsuka et al.
7,450,001 B2 11/2008 Berkman
7,453,352 B2 11/2008 Kline et al.
7,453,393 B2 11/2008 Duivenvoorden et al.
7,456,650 B2 11/2008 Lee et al.
7,459,834 B2 12/2008 Knowles et al.

(56) **References Cited**

U.S. PATENT DOCUMENTS

7,463,877	B2	12/2008	Iwamura
7,465,879	B2	12/2008	Glew et al.
7,466,225	B2	12/2008	White, II et al.
7,468,657	B2	12/2008	Yaney
7,479,841	B2	1/2009	Stenger et al.
7,492,317	B2	2/2009	Tinsley et al.
7,496,674	B2	2/2009	Jorgensen et al.
7,508,834	B2	3/2009	Berkman et al.
7,509,009	B2	3/2009	Suzuki et al.
7,509,675	B2	3/2009	Aaron et al.
7,512,090	B2	3/2009	Benitez Pelaez et al.
7,516,487	B1	4/2009	Szeto et al.
7,518,529	B2	4/2009	O'Sullivan et al.
7,518,952	B1	4/2009	Padden et al.
7,519,323	B2	4/2009	Mohebbi et al.
7,522,115	B2	4/2009	Waltman et al.
7,522,812	B2	4/2009	Zitting
7,525,501	B2	4/2009	Black et al.
7,531,803	B2	5/2009	Mittleman et al.
7,532,792	B2	5/2009	Skovgaard et al.
7,539,381	B2	5/2009	Li et al.
7,545,818	B2	6/2009	Chen et al.
7,546,214	B2	6/2009	Rivers, Jr. et al.
7,554,998	B2	6/2009	Simonsson et al.
7,555,182	B2	6/2009	Martin et al.
7,555,186	B2	6/2009	De et al.
7,555,187	B2	6/2009	Bickham et al.
7,557,563	B2	7/2009	Cowan et al.
7,561,025	B2	7/2009	Gerszberg et al.
7,567,154	B2	7/2009	Elmore
7,567,740	B2	7/2009	Bayindir et al.
7,570,137	B2	8/2009	Kintis et al.
7,570,470	B2	8/2009	Holley
7,580,643	B2	8/2009	Moore et al.
7,581,702	B2	9/2009	Wheeler et al.
7,583,074	B1	9/2009	Lynch et al.
7,584,470	B2	9/2009	Barker et al.
7,589,686	B2	9/2009	Balzovsky et al.
7,590,404	B1	9/2009	Johnson
7,591,020	B2	9/2009	Kammer et al.
7,596,222	B2	9/2009	Jonas et al.
7,598,844	B2	10/2009	Corcoran et al.
7,602,333	B2	10/2009	Hiramatsu et al.
7,602,815	B2	10/2009	Houghton et al.
7,620,370	B2	11/2009	Barak et al.
7,625,131	B2	12/2009	Zienkewicz et al.
7,626,489	B2	12/2009	Berkman et al.
7,626,542	B2	12/2009	Kober et al.
7,634,250	B1	12/2009	Prasad et al.
7,640,562	B2	12/2009	Bouilloux-Lafont et al.
7,640,581	B1	12/2009	Brenton et al.
7,653,363	B2	1/2010	Karr et al.
RE41,147	E	2/2010	Pang et al.
7,656,167	B1	2/2010	McLean et al.
7,660,252	B1	2/2010	Huang et al.
7,660,328	B1	2/2010	Oz et al.
7,664,117	B2	2/2010	Lou et al.
7,669,049	B2	2/2010	Wang et al.
7,671,701	B2	3/2010	Radtke
7,671,820	B2	3/2010	Tokoro et al.
7,676,679	B2	3/2010	Weis et al.
7,680,478	B2	3/2010	Willars et al.
7,680,516	B2	3/2010	Lovberg et al.
7,680,561	B2	3/2010	Rodgers et al.
7,683,848	B2	3/2010	Musch et al.
7,684,383	B1	3/2010	Thompson et al.
7,693,079	B2	4/2010	Cerami et al.
7,693,162	B2	4/2010	McKenna et al.
7,693,939	B2	4/2010	Wu et al.
7,701,931	B2	4/2010	Kajiwara
7,705,747	B2	4/2010	Twitchell, Jr.
7,715,672	B2	5/2010	Dong et al.
7,716,660	B2	5/2010	Mackay et al.
7,724,782	B2	5/2010	Wang et al.
7,728,772	B2	6/2010	Mortazawi et al.
7,733,094	B2	6/2010	Bright et al.
7,734,717	B2	6/2010	Saarimäki et al.
7,743,403	B2	6/2010	McCarty et al.
7,747,356	B2	6/2010	Andarawis et al.
7,747,774	B2	6/2010	Aaron et al.
7,750,244	B1	7/2010	Melding et al.
7,750,763	B2	7/2010	Praβmayer et al.
7,760,978	B2	7/2010	Fishteyn et al.
7,761,079	B2	7/2010	Mollenkopf et al.
7,764,943	B2	7/2010	Radtke et al.
7,773,664	B2	8/2010	Myers et al.
7,782,156	B2	8/2010	Woods et al.
7,783,195	B2	8/2010	Riggsby et al.
7,786,894	B2	8/2010	Polk et al.
7,786,945	B2	8/2010	Baldauf et al.
7,786,946	B2	8/2010	Diaz et al.
7,791,549	B2	9/2010	Clymer et al.
7,795,877	B2	9/2010	Radtke et al.
7,795,994	B2	9/2010	Radtke et al.
7,796,025	B2	9/2010	Berkman et al.
7,796,890	B1	9/2010	Johnson
7,805,029	B2	9/2010	Bayindir et al.
7,808,441	B2	10/2010	Parsche et al.
7,809,223	B2	10/2010	Miyabe et al.
7,812,686	B2	10/2010	Woods et al.
7,812,778	B2	10/2010	Hasegawa et al.
7,813,344	B2	10/2010	Cheswick
7,825,793	B1	11/2010	Spillman et al.
7,826,602	B1	11/2010	Hunyady et al.
7,827,610	B2	11/2010	Wang et al.
7,830,228	B2	11/2010	Evans et al.
7,835,128	B2	11/2010	Divan et al.
7,835,600	B1	11/2010	Yap et al.
7,848,517	B2	12/2010	Britz et al.
7,852,837	B1	12/2010	Au et al.
7,855,612	B2	12/2010	Zienkewicz et al.
7,856,007	B2	12/2010	Corcoran et al.
7,869,391	B2	1/2011	Lee et al.
7,872,610	B2	1/2011	Motzer et al.
7,873,249	B2	1/2011	Kachmar et al.
7,876,174	B2	1/2011	Radtke et al.
7,884,285	B2	2/2011	Spencer
7,884,648	B2	2/2011	Broyde et al.
7,885,542	B2	2/2011	Riggsby et al.
7,889,148	B2	2/2011	Diaz et al.
7,889,149	B2	2/2011	Peebles et al.
7,890,053	B2	2/2011	Washiro
7,893,789	B2	2/2011	Paynter et al.
7,894,770	B2	2/2011	Washiro et al.
7,903,918	B1	3/2011	Bickham et al.
7,903,972	B2	3/2011	Riggsby et al.
7,929,940	B1	4/2011	Dianda et al.
7,930,750	B1	4/2011	Gauvin et al.
7,937,699	B2	5/2011	Schneider et al.
7,940,207	B1	5/2011	Kienzle et al.
7,956,818	B1	6/2011	Hsu et al.
7,958,120	B2	6/2011	Muntz et al.
7,962,957	B2	6/2011	Keohane et al.
7,965,842	B2	6/2011	Whelan et al.
7,970,937	B2	6/2011	Shuster et al.
7,971,053	B2	6/2011	Gibson, Sr. et al.
7,974,387	B2	7/2011	Lutz et al.
7,983,740	B2	7/2011	Culver et al.
7,986,711	B2	7/2011	Horvath et al.
7,990,329	B2	8/2011	Deng et al.
7,991,877	B2	8/2011	Keohane et al.
7,992,014	B2	8/2011	Langgood et al.
8,013,694	B2	9/2011	Sagala et al.
8,019,288	B2	9/2011	Yu et al.
8,022,885	B2	9/2011	Smoyer et al.
8,022,887	B1	9/2011	Zarnaghi et al.
8,027,391	B2	9/2011	Matsubara et al.
8,036,207	B2	10/2011	Chen et al.
8,049,576	B2	11/2011	Broyde et al.
8,064,944	B2	11/2011	Yun et al.
8,065,099	B2	11/2011	Gibala et al.
8,069,483	B1	11/2011	Matlock et al.
8,072,323	B2	12/2011	Kodama et al.
8,072,386	B2	12/2011	Lier et al.

(56) **References Cited**

U.S. PATENT DOCUMENTS

8,073,810	B2	12/2011	Maes
8,077,049	B2	12/2011	Yaney et al.
8,081,854	B2	12/2011	Yoon et al.
8,089,404	B2	1/2012	Nichols et al.
8,089,952	B2	1/2012	Spade et al.
8,090,379	B2	1/2012	Lambert et al.
8,094,081	B1	1/2012	Boone et al.
8,094,985	B2	1/2012	Imamura et al.
8,095,093	B2	1/2012	Takinami et al.
8,098,198	B2	1/2012	Thiesen et al.
8,102,779	B2	1/2012	Kim et al.
RE43,163	E	2/2012	Anderson
8,111,148	B2	2/2012	Parker et al.
8,120,488	B2	2/2012	Bloy et al.
8,121,624	B2	2/2012	Cai et al.
8,126,393	B2	2/2012	Wu et al.
8,129,817	B2	3/2012	Jou et al.
8,131,125	B2	3/2012	Molin et al.
8,131,266	B2	3/2012	Cai et al.
8,132,239	B2	3/2012	Wahl
8,134,424	B2	3/2012	Kato et al.
8,134,458	B2	3/2012	Lund
8,140,113	B2	3/2012	Rofougaran et al.
8,150,311	B2	4/2012	Hart et al.
8,151,306	B2	4/2012	Rakib
8,156,520	B2	4/2012	Casagrande et al.
8,159,316	B2	4/2012	Miyazato et al.
8,159,385	B2	4/2012	Farneth et al.
8,159,394	B2	4/2012	Hayes et al.
8,159,742	B2	4/2012	McKay et al.
8,159,933	B2	4/2012	Henry
8,160,064	B2	4/2012	Kokernak et al.
8,160,530	B2	4/2012	Corman et al.
8,160,825	B1	4/2012	Roe, Jr. et al.
8,164,531	B2	4/2012	Lier et al.
8,171,146	B2	5/2012	Chen et al.
8,173,943	B2	5/2012	Vilo et al.
8,175,649	B2	5/2012	Harel et al.
8,180,917	B1	5/2012	Yan et al.
8,184,015	B2	5/2012	Lilien et al.
8,184,059	B2	5/2012	Bunch et al.
8,184,311	B2	5/2012	Sakai et al.
8,188,855	B2	5/2012	Sharma et al.
8,199,762	B2	6/2012	Michelson et al.
8,203,501	B2	6/2012	Kim et al.
8,212,635	B2	7/2012	Miller, II et al.
8,213,758	B2	7/2012	Dong et al.
8,218,929	B2	7/2012	Bickham et al.
8,222,919	B2	7/2012	Broyde et al.
8,222,977	B2	7/2012	Oyama et al.
8,225,379	B2	7/2012	van et al.
8,237,617	B1	8/2012	Johnson et al.
8,238,824	B2	8/2012	Washiro
8,242,358	B2	8/2012	Park et al.
8,243,603	B2	8/2012	Gossain et al.
8,249,028	B2	8/2012	Porras et al.
8,253,516	B2	8/2012	Miller, II et al.
8,255,952	B2	8/2012	Boylan, III et al.
8,258,743	B2	9/2012	Tyler et al.
8,264,417	B2	9/2012	Snow et al.
8,269,583	B2	9/2012	Miller, II et al.
8,295,301	B2	10/2012	Yonge, III et al.
8,300,538	B2	10/2012	Kim et al.
8,300,640	B2	10/2012	Al-Banna et al.
8,316,228	B2	11/2012	Winslow et al.
8,316,364	B2	11/2012	Stein et al.
8,324,990	B2	12/2012	Vouloumanos
8,325,693	B2	12/2012	Binder et al.
8,343,145	B2	1/2013	Brannan et al.
8,344,829	B2	1/2013	Miller, II et al.
8,363,313	B2	1/2013	Nakaguma et al.
8,369,667	B2	2/2013	Rose et al.
8,373,095	B2	2/2013	Huynh et al.
8,374,821	B2	2/2013	Rousselle et al.
8,384,600	B2	2/2013	Huang et al.
8,385,978	B2	2/2013	Leung et al.
8,386,198	B2	2/2013	Lancaster
8,390,402	B2	3/2013	Kunes et al.
8,406,239	B2	3/2013	Hurwitz et al.
8,406,593	B2	3/2013	Molin et al.
8,407,687	B2	3/2013	Moshir et al.
8,412,130	B2	4/2013	Suematsu et al.
8,414,326	B2	4/2013	Bowman
8,415,884	B2	4/2013	Chen et al.
8,428,033	B2	4/2013	Hettstedt et al.
8,433,168	B2	4/2013	Filippov et al.
8,434,103	B2	4/2013	Tsuchida et al.
8,437,383	B2	5/2013	Wiwel et al.
8,457,027	B2	6/2013	Dougherty et al.
8,458,453	B1	6/2013	Mahalingaiah et al.
8,462,063	B2	6/2013	Gummalla et al.
8,467,363	B2	6/2013	Lea et al.
8,468,244	B2	6/2013	Redlich et al.
8,484,511	B2	7/2013	Tidwell et al.
8,495,718	B2	7/2013	Han et al.
8,497,749	B2	7/2013	Elmore
8,503,845	B2	8/2013	Winzer et al.
8,505,057	B2	8/2013	Rogers
8,509,114	B1	8/2013	Szajdecki
8,514,980	B2	8/2013	Kuhtz
8,515,383	B2	8/2013	Prince et al.
8,516,470	B1	8/2013	Joshi et al.
8,516,474	B2	8/2013	Lamba et al.
8,519,892	B2	8/2013	Ding et al.
8,520,636	B2	8/2013	Xu
8,528,059	B1	9/2013	Saluzzo et al.
8,532,023	B2	9/2013	Buddhikot et al.
8,532,046	B2	9/2013	Hu et al.
8,532,492	B2	9/2013	Sadowski et al.
8,536,857	B2	9/2013	Nero, Jr. et al.
8,537,068	B2	9/2013	Call et al.
8,537,705	B2	9/2013	Afkhamie et al.
8,539,540	B2	9/2013	Zenoni
8,539,569	B2	9/2013	Mansour
8,542,968	B2	9/2013	Dong et al.
8,548,294	B2	10/2013	Toge et al.
8,553,646	B2	10/2013	Kumar
8,561,104	B1	10/2013	Dow et al.
8,561,181	B1	10/2013	Sobel et al.
8,565,568	B2	10/2013	Bigot-Astruc et al.
8,572,247	B2	10/2013	Larson et al.
8,572,639	B2	10/2013	Ficco
8,572,661	B2	10/2013	Strong et al.
8,578,076	B2	11/2013	van der Linden et al.
8,578,486	B2	11/2013	Lifliand et al.
8,582,502	B2	11/2013	Conte et al.
8,584,195	B2	11/2013	Sherlock et al.
8,587,490	B2	11/2013	Niver et al.
8,587,492	B2	11/2013	Runyon et al.
8,588,567	B2	11/2013	Kamps et al.
8,588,840	B2	11/2013	Truong et al.
8,588,991	B1	11/2013	Forbes, Jr.
8,593,238	B2	11/2013	Miller, II et al.
8,594,956	B2	11/2013	McBee et al.
8,600,602	B1	12/2013	Watson et al.
8,604,982	B2	12/2013	Gummalla et al.
8,604,999	B2	12/2013	Abumrad et al.
8,605,579	B2	12/2013	Abraham et al.
8,612,550	B2	12/2013	Yoo et al.
8,613,020	B2	12/2013	Knudson et al.
8,625,547	B1	1/2014	Miller et al.
8,629,811	B2	1/2014	Gaynor et al.
8,639,934	B2	1/2014	Kruglick
8,653,906	B2	2/2014	Mahon et al.
8,655,396	B2	2/2014	Malladi et al.
8,656,458	B2	2/2014	Heffez et al.
8,660,526	B1	2/2014	Heiderscheit et al.
8,660,698	B2	2/2014	Phillips et al.
8,665,102	B2	3/2014	Salewske et al.
8,666,553	B2	3/2014	Phillips et al.
8,674,630	B1	3/2014	Cornelius et al.
8,681,463	B2	3/2014	Franks et al.
8,687,650	B2	4/2014	King
8,688,153	B2	4/2014	Komori et al.

(56) **References Cited**

U.S. PATENT DOCUMENTS

8,699,454	B2	4/2014	Hapsari et al.
8,699,461	B2	4/2014	Qian et al.
8,705,925	B2	4/2014	Terada et al.
8,706,026	B2	4/2014	Truong et al.
8,707,432	B1	4/2014	Rathi et al.
8,711,732	B2	4/2014	Johnson et al.
8,711,806	B2	4/2014	Lim et al.
8,711,857	B2	4/2014	Jackson et al.
8,712,200	B1	4/2014	Abernathy et al.
8,719,938	B2	5/2014	Demeter et al.
8,731,358	B2	5/2014	Pare et al.
8,732,476	B1	5/2014	Van et al.
8,737,793	B2	5/2014	Imamura et al.
8,738,318	B2	5/2014	Spillane
8,743,004	B2	6/2014	Haziza
8,749,449	B2	6/2014	Caldwell et al.
8,750,664	B2	6/2014	Huang et al.
8,755,659	B2	6/2014	Imamura et al.
8,760,354	B2	6/2014	Flannery et al.
8,761,792	B2	6/2014	Sennett et al.
8,763,097	B2	6/2014	Bhatnagar et al.
8,767,071	B1	7/2014	Marshall
8,769,622	B2	7/2014	Chang et al.
8,780,012	B2	7/2014	Llombart Juan et al.
8,782,195	B2	7/2014	Foti
8,786,284	B2	7/2014	Sirigiri et al.
8,786,514	B2	7/2014	Dickie et al.
8,789,091	B2	7/2014	Eldering et al.
8,792,760	B2	7/2014	Choi et al.
8,792,933	B2	7/2014	Chen et al.
8,793,363	B2	7/2014	Sater et al.
8,793,742	B2	7/2014	Macrae et al.
8,797,207	B2	8/2014	Kienzle et al.
8,804,667	B2	8/2014	Wang
8,806,202	B2	8/2014	Shoemake et al.
8,810,404	B2	8/2014	Bertoncini et al.
8,810,421	B2	8/2014	Deaver, Sr. et al.
8,811,278	B2	8/2014	Hori et al.
8,812,154	B2	8/2014	Vian et al.
8,817,741	B2	8/2014	Shaheen
8,825,239	B2	9/2014	Cooper et al.
8,830,112	B1	9/2014	Buehler et al.
8,836,607	B2	9/2014	Cook et al.
8,839,350	B1	9/2014	Shapcott et al.
8,847,840	B1	9/2014	Diaz et al.
8,847,846	B1	9/2014	Diaz et al.
8,856,239	B1	10/2014	Oliver et al.
8,856,530	B2	10/2014	Lamberg et al.
8,863,245	B1	10/2014	Abhyanker
8,867,226	B2	10/2014	Colomb et al.
8,872,032	B2	10/2014	Su et al.
8,875,224	B2	10/2014	Gross et al.
8,878,740	B2	11/2014	Coupland et al.
8,881,588	B2	11/2014	Baer et al.
8,885,689	B2	11/2014	Blasco et al.
8,887,212	B2	11/2014	Dua
8,890,759	B2	11/2014	Pantea et al.
8,893,246	B2	11/2014	El-Moussa et al.
8,897,215	B2	11/2014	Hazani et al.
8,897,697	B1	11/2014	Bennett et al.
8,901,916	B2	12/2014	Rodriguez et al.
8,903,214	B2	12/2014	Alkeskjold
8,907,222	B2	12/2014	Stransky
8,907,845	B2	12/2014	Jones
8,913,862	B1	12/2014	Emmerich et al.
8,917,215	B2	12/2014	Pohl
8,917,964	B2	12/2014	Blew et al.
8,918,108	B2	12/2014	Van Heeswyk et al.
8,918,135	B2	12/2014	Kang et al.
8,925,079	B2	12/2014	Miyake et al.
8,934,747	B2	1/2015	Smith et al.
8,937,577	B2	1/2015	Gerini et al.
8,938,144	B2	1/2015	Hennink et al.
8,941,912	B2	1/2015	Ichii et al.
8,952,678	B2	2/2015	Giboney et al.
8,955,051	B2	2/2015	Marzii
8,955,075	B2	2/2015	Smith et al.
8,957,818	B2	2/2015	Chen et al.
8,958,665	B2	2/2015	Ziari et al.
8,963,790	B2	2/2015	Brown et al.
8,964,433	B2	2/2015	Hai-Maharsi
8,966,609	B2	2/2015	Lee et al.
8,970,438	B2	3/2015	Hager et al.
8,984,113	B2	3/2015	Li et al.
8,989,788	B2	3/2015	Kim et al.
8,994,474	B2	3/2015	Mahon et al.
8,996,188	B2	3/2015	Frader-Thompson et al.
8,996,728	B2	3/2015	Cochinwala et al.
9,000,353	B2	4/2015	Seo et al.
9,001,689	B1	4/2015	Ponnampalam et al.
9,001,717	B2	4/2015	Chun et al.
9,003,492	B2	4/2015	Katar
9,008,208	B2	4/2015	Khandani
9,008,513	B2	4/2015	Kim et al.
9,009,460	B2	4/2015	Chen
9,014,621	B2	4/2015	Mohebbi
9,015,467	B2	4/2015	Buer
9,019,595	B2	4/2015	Jain et al.
9,019,892	B2	4/2015	Zhang et al.
9,020,555	B2	4/2015	Sheikh et al.
9,021,251	B2	4/2015	Chawla
9,021,575	B2	4/2015	Martini
9,037,516	B2	5/2015	Abhyanker
9,042,812	B1	5/2015	Bennett et al.
9,070,962	B2	6/2015	Kobayashi
9,082,307	B2	7/2015	Sharawi
9,094,407	B1	7/2015	Matthieu
9,098,325	B2	8/2015	Reddin
9,099,787	B2	8/2015	Blech
9,103,864	B2	8/2015	Ali
9,106,617	B2	8/2015	Kshirsagar et al.
9,113,347	B2	8/2015	Shala
9,119,127	B1	8/2015	Henry
9,128,941	B2	9/2015	Shulman
9,130,641	B2	9/2015	Mohebbi
9,134,945	B2	9/2015	Husain
9,137,485	B2	9/2015	Bar-Niv et al.
9,142,334	B2	9/2015	Muto et al.
9,143,084	B2	9/2015	Perez et al.
9,167,535	B2	10/2015	Christoffersson et al.
9,204,418	B2	12/2015	Siomina et al.
9,209,902	B2	12/2015	Willis, III et al.
9,219,594	B2	12/2015	Khlat
9,264,204	B2	2/2016	Seo et al.
9,265,078	B2	2/2016	Lim et al.
9,271,185	B2	2/2016	Abdelmonem et al.
9,276,303	B2	3/2016	Chang et al.
9,276,304	B2	3/2016	Behan
9,282,144	B2	3/2016	Tebay et al.
9,287,605	B2	3/2016	Daughenbaugh et al.
9,293,801	B2	3/2016	Courtney et al.
9,306,682	B2	4/2016	Singh
9,312,929	B2	4/2016	Forenza et al.
9,334,052	B2	5/2016	Ubhi et al.
9,338,823	B2	5/2016	Saban et al.
9,351,182	B2	5/2016	Elliott et al.
9,363,761	B2	6/2016	Venkatraman
9,368,275	B2	6/2016	McBee et al.
9,379,556	B2	6/2016	Haensgen et al.
9,380,857	B2	7/2016	Davis et al.
9,397,380	B2	7/2016	Kudela et al.
9,421,869	B1	8/2016	Ananthanarayanan et al.
2001/0030789	A1	10/2001	Jiang et al.
2002/0002040	A1	1/2002	Kline et al.
2002/0008672	A1	1/2002	Gothard et al.
2002/0021716	A1	2/2002	Terk et al.
2002/0024424	A1	2/2002	Burns et al.
2002/0040439	A1	4/2002	Kellum et al.
2002/0057223	A1	5/2002	Hook
2002/0069417	A1	6/2002	Kliger et al.
2002/0083194	A1	6/2002	Bak et al.
2002/0099949	A1	7/2002	Fries et al.
2002/0101852	A1	8/2002	Say et al.
2002/0111997	A1	8/2002	Herlihy et al.

(56) **References Cited**

U.S. PATENT DOCUMENTS

2002/0156917 A1 10/2002 Nye et al.
2002/0186694 A1 12/2002 Mahajan et al.
2003/0002476 A1 1/2003 Chung et al.
2003/0010528 A1 1/2003 Niles
2003/0038753 A1 2/2003 Mahon et al.
2003/0049003 A1 3/2003 Ahmad et al.
2003/0054793 A1 3/2003 Manis et al.
2003/0095208 A1 5/2003 Chouraqui et al.
2003/0137464 A1 7/2003 Foti et al.
2003/0152331 A1 8/2003 Dair et al.
2003/0188308 A1 10/2003 Kizuka
2003/0190110 A1 10/2003 Kline et al.
2003/0202756 A1 10/2003 Hurley et al.
2003/0210197 A1 11/2003 Cencich et al.
2004/0015725 A1 1/2004 Boneh et al.
2004/0023640 A1 2/2004 Ballai et al.
2004/0048596 A1 3/2004 Wyrzykowska et al.
2004/0054425 A1 3/2004 Elmore
2004/0085153 A1 5/2004 Fukunaga et al.
2004/0091032 A1 5/2004 Duchi et al.
2004/0100343 A1 5/2004 Tsu et al.
2004/0104410 A1 6/2004 Gilbert et al.
2004/0113757 A1 6/2004 White, II et al.
2004/0119564 A1 6/2004 Itoh et al.
2004/0131310 A1 7/2004 Walker et al.
2004/0163135 A1 8/2004 Giaccherini et al.
2004/0165669 A1 8/2004 Otsuka et al.
2004/0169572 A1 9/2004 Elmore et al.
2004/0196784 A1 10/2004 Larsson et al.
2004/0198228 A1 10/2004 Raghothaman et al.
2004/0212481 A1 10/2004 Abraham et al.
2004/0213147 A1 10/2004 Wiese et al.
2004/0213189 A1 10/2004 Alspaugh et al.
2004/0213294 A1 10/2004 Hughes et al.
2004/0250069 A1 12/2004 Kosamo et al.
2005/0005854 A1 1/2005 Suzuki et al.
2005/0017825 A1 1/2005 Hansen
2005/0063422 A1 3/2005 Lazar et al.
2005/0068223 A1 3/2005 Vavik et al.
2005/0069321 A1 3/2005 Sullivan et al.
2005/0074208 A1 4/2005 Badcock et al.
2005/0097396 A1 5/2005 Wood
2005/0102185 A1 5/2005 Barker et al.
2005/0111533 A1 5/2005 Berkman et al.
2005/0143868 A1 6/2005 Whelan et al.
2005/0151659 A1 7/2005 Donovan et al.
2005/0164666 A1 7/2005 Lang et al.
2005/0168326 A1 8/2005 White et al.
2005/0169056 A1* 8/2005 Berkman G02B 6/483
365/185.22
2005/0169401 A1 8/2005 Abraham et al.
2005/0177463 A1 8/2005 Crutchfield et al.
2005/0190101 A1 9/2005 Hiramatsu et al.
2005/0212626 A1 9/2005 Takamatsu et al.
2005/0219135 A1 10/2005 Lee et al.
2005/0226353 A1 10/2005 Gebara et al.
2005/0258920 A1 11/2005 Elmore
2006/0034724 A1 2/2006 Hamano et al.
2006/0053486 A1 3/2006 Wesinger et al.
2006/0082516 A1 4/2006 Strickland et al.
2006/0111047 A1 5/2006 Louberg et al.
2006/0114925 A1 6/2006 Gerszberg et al.
2006/0119528 A1 6/2006 Bhattacharyya et al.
2006/0120399 A1 6/2006 Claret et al.
2006/0128322 A1 6/2006 Igarashi et al.
2006/0153878 A1 7/2006 Savarino et al.
2006/0172781 A1 8/2006 Mohebbi et al.
2006/0181394 A1 8/2006 Clarke et al.
2006/0187023 A1 8/2006 Iwamura et al.
2006/0192672 A1 8/2006 Gidge et al.
2006/0220833 A1 10/2006 Berkman et al.
2006/0239501 A1 10/2006 Petrovic et al.
2006/0249622 A1 11/2006 Steele et al.
2006/0255930 A1 11/2006 Berkman et al.
2006/0286927 A1 12/2006 Berkman et al.
2007/0002771 A1 1/2007 Berkman et al.
2007/0022475 A1 1/2007 Rossi et al.
2007/0025265 A1 2/2007 Marcotullio et al.
2007/0025386 A1 2/2007 Riedel et al.
2007/0041464 A1 2/2007 Kim et al.
2007/0041554 A1 2/2007 Newman
2007/0054622 A1 3/2007 Berkman
2007/0063914 A1 3/2007 Becker et al.
2007/0090185 A1 4/2007 Lewkowitz et al.
2007/0105508 A1 5/2007 Tong et al.
2007/0135044 A1 6/2007 Rhodes et al.
2007/0144779 A1 6/2007 Vicente et al.
2007/0189182 A1 8/2007 Berkman et al.
2007/0211689 A1 9/2007 Campero et al.
2007/0211786 A1 9/2007 Shattil et al.
2007/0252998 A1 11/2007 Berthold et al.
2007/0257858 A1 11/2007 Liu et al.
2007/0268124 A1 11/2007 Berkman et al.
2007/0268846 A1 11/2007 Proctor et al.
2007/0300280 A1 12/2007 Turner et al.
2008/0002652 A1 1/2008 Gupta et al.
2008/0003872 A1 1/2008 Chen et al.
2008/0007416 A1 1/2008 Cern et al.
2008/0043655 A1 2/2008 Lee et al.
2008/0055149 A1 3/2008 Rees et al.
2008/0060832 A1 3/2008 Razavi et al.
2008/0064331 A1 3/2008 Washiro et al.
2008/0077336 A1 3/2008 Fernandes et al.
2008/0080389 A1 4/2008 Hart et al.
2008/0084937 A1 4/2008 Barthold et al.
2008/0120667 A1 5/2008 Zaltsman
2008/0122723 A1 5/2008 Rofougaran et al.
2008/0130639 A1 6/2008 Costa-Requena et al.
2008/0143491 A1 6/2008 Deaver et al.
2008/0150790 A1 6/2008 Voigtlaender et al.
2008/0153416 A1 6/2008 Washiro et al.
2008/0191851 A1 8/2008 Koga et al.
2008/0211727 A1 9/2008 Elmore et al.
2008/0247716 A1 10/2008 Thomas et al.
2008/0252522 A1 10/2008 Asbridge et al.
2008/0253723 A1 10/2008 Stokes et al.
2008/0255782 A1 10/2008 Bilac et al.
2008/0266060 A1 10/2008 Takei et al.
2008/0267076 A1 10/2008 Laperi et al.
2008/0279199 A1 11/2008 Park et al.
2008/0313691 A1 12/2008 Cholas
2009/0002137 A1 1/2009 Radtke et al.
2009/0007189 A1 1/2009 Gutknecht
2009/0007190 A1 1/2009 Weber et al.
2009/0007194 A1 1/2009 Brady, Jr. et al.
2009/0015239 A1 1/2009 Georgiou et al.
2009/0054737 A1 2/2009 Magar et al.
2009/0061940 A1 3/2009 Scheinert et al.
2009/0067441 A1 3/2009 Ansari et al.
2009/0079660 A1* 3/2009 Elmore H04B 3/56
343/904
2009/0085726 A1 4/2009 Radtke et al.
2009/0093267 A1 4/2009 Ariyur et al.
2009/0109981 A1 4/2009 Keselman
2009/0129301 A1 5/2009 Belimpasakis et al.
2009/0138931 A1 5/2009 Lin et al.
2009/0140852 A1 6/2009 Stolarczyk et al.
2009/0144417 A1 6/2009 Kisel et al.
2009/0171780 A1 7/2009 Aldrey et al.
2009/0201133 A1 8/2009 Bruns et al.
2009/0202020 A1 8/2009 Hafeez et al.
2009/0210901 A1 8/2009 Hawkins et al.
2009/0250449 A1 10/2009 Petrenko et al.
2009/0254971 A1 10/2009 Herz et al.
2009/0258652 A1 10/2009 Lambert et al.
2009/0284435 A1 11/2009 Elmore et al.
2009/0286482 A1 11/2009 Gorokhov et al.
2009/0311960 A1 12/2009 Farahani et al.
2009/0315668 A1 12/2009 Leete, III et al.
2009/0325479 A1 12/2009 Chakrabarti et al.
2009/0325628 A1 12/2009 Becker et al.
2010/0002618 A1 1/2010 Eichinger et al.
2010/0002731 A1 1/2010 Kimura et al.
2010/0026607 A1 2/2010 Imai et al.

(56) **References Cited**

U.S. PATENT DOCUMENTS

2010/0039339 A1 2/2010 Kuroda et al.
2010/0045447 A1 2/2010 Mollenkopf et al.
2010/0052799 A1 3/2010 Watanabe et al.
2010/0053019 A1 3/2010 Ikawa et al.
2010/0057894 A1 3/2010 Glasser
2010/0080203 A1 4/2010 Reynolds et al.
2010/0085036 A1 4/2010 Banting et al.
2010/0090887 A1 4/2010 Cooper et al.
2010/0100918 A1 4/2010 Egan, Jr. et al.
2010/0111521 A1 5/2010 Kim et al.
2010/0119234 A1 5/2010 Suematsu et al.
2010/0121945 A1 5/2010 Gerber et al.
2010/0150215 A1 6/2010 Black et al.
2010/0153990 A1 6/2010 Ress et al.
2010/0169937 A1 7/2010 Atwal et al.
2010/0175080 A1 7/2010 Yuen et al.
2010/0176894 A1 7/2010 Tahara et al.
2010/0177894 A1 7/2010 Yasuma et al.
2010/0185614 A1 7/2010 O'Brien et al.
2010/0201313 A1 8/2010 Vorenkamp et al.
2010/0214183 A1 8/2010 Stoneback et al.
2010/0214185 A1 8/2010 Sammoura et al.
2010/0224732 A1 9/2010 Olson et al.
2010/0225426 A1 9/2010 Unger et al.
2010/0232539 A1 9/2010 Han et al.
2010/0243633 A1 9/2010 Huynh et al.
2010/0253450 A1 10/2010 Kim et al.
2010/0265877 A1 10/2010 Foxworthy et al.
2010/0266063 A1 10/2010 Harel et al.
2010/0283693 A1 11/2010 Xie et al.
2010/0284446 A1 11/2010 Mu et al.
2010/0319068 A1 12/2010 Abbadessa et al.
2010/0327880 A1 12/2010 Stein et al.
2011/0018704 A1 1/2011 Burrows et al.
2011/0040861 A1 2/2011 Van der Merwe et al.
2011/0042120 A1 2/2011 Otsuka et al.
2011/0043051 A1 2/2011 Meskens et al.
2011/0053498 A1 3/2011 Nogueira-Nine
2011/0068893 A1 3/2011 Lahiri et al.
2011/0068988 A1 3/2011 Monte et al.
2011/0107364 A1 5/2011 Lajoie et al.
2011/0109936 A1 5/2011 Coffee et al.
2011/0110404 A1 5/2011 Washiro
2011/0118888 A1 5/2011 White et al.
2011/0132658 A1 6/2011 Miller, II et al.
2011/0133865 A1 6/2011 Miller, II et al.
2011/0133867 A1 6/2011 Miller, II et al.
2011/0136432 A1 6/2011 Miller, II et al.
2011/0140911 A1 6/2011 Pant et al.
2011/0141555 A1 6/2011 Fermann et al.
2011/0148578 A1 6/2011 Aloi et al.
2011/0164514 A1 7/2011 Afkhamie et al.
2011/0165847 A1 7/2011 Kawasaki et al.
2011/0169336 A1 7/2011 Yerazunis et al.
2011/0172000 A1 7/2011 Quigley et al.
2011/0187578 A1 8/2011 Farneth et al.
2011/0208450 A1 8/2011 Salka et al.
2011/0214176 A1 9/2011 Burch et al.
2011/0219402 A1 9/2011 Candelore et al.
2011/0225046 A1 9/2011 Eldering et al.
2011/0228814 A1 9/2011 Washiro et al.
2011/0268085 A1 11/2011 Barany et al.
2011/0274396 A1 11/2011 Nakajima et al.
2011/0294509 A1 12/2011 Kim et al.
2012/0015654 A1 1/2012 Palanki et al.
2012/0039366 A1 2/2012 Wood et al.
2012/0046891 A1 2/2012 Yaney et al.
2012/0068903 A1 3/2012 Thevenard et al.
2012/0077485 A1 3/2012 Shin et al.
2012/0078452 A1 3/2012 Daum et al.
2012/0084807 A1 4/2012 Thompson et al.
2012/0091820 A1 4/2012 Campanella et al.
2012/0092161 A1 4/2012 West et al.
2012/0093078 A1 4/2012 Perlman et al.
2012/0102568 A1 4/2012 Tarbotton et al.
2012/0105246 A1 5/2012 Sexton et al.
2012/0117584 A1 5/2012 Gordon
2012/0129566 A1 5/2012 Lee et al.
2012/0133373 A1 5/2012 Ali et al.
2012/0144420 A1 6/2012 Del Sordo et al.
2012/0154239 A1 6/2012 Bar-Sade et al.
2012/0161543 A1 6/2012 Reuven et al.
2012/0181258 A1 7/2012 Shan et al.
2012/0197558 A1 8/2012 Henig et al.
2012/0214538 A1 8/2012 Kim et al.
2012/0224807 A1 9/2012 Winzer et al.
2012/0250534 A1 10/2012 Langer et al.
2012/0250752 A1 10/2012 McHann et al.
2012/0263152 A1 10/2012 Fischer et al.
2012/0268340 A1 10/2012 Capozzoli et al.
2012/0272741 A1 11/2012 Xiao et al.
2012/0274528 A1 11/2012 McMahon et al.
2012/0287922 A1 11/2012 Heck et al.
2012/0299671 A1 11/2012 Ikeda et al.
2012/0304294 A1 11/2012 Fujiwara et al.
2012/0306587 A1 12/2012 Strid et al.
2012/0306708 A1 12/2012 Henderson et al.
2012/0322492 A1 12/2012 Koo et al.
2012/0324018 A1 12/2012 Metcalf et al.
2012/0327908 A1 12/2012 Gupta et al.
2012/0329523 A1 12/2012 Stewart et al.
2012/0330756 A1 12/2012 Morris et al.
2013/0002409 A1 1/2013 Molina et al.
2013/0003876 A1 1/2013 Bennett
2013/0010679 A1 1/2013 Ma et al.
2013/0016022 A1 1/2013 Heiks et al.
2013/0039624 A1 2/2013 Scherer et al.
2013/0064178 A1 3/2013 Cs et al.
2013/0064311 A1* 3/2013 Turner H01P 3/00
375/259
2013/0070621 A1 3/2013 Marzetta et al.
2013/0077664 A1 3/2013 Lee et al.
2013/0080290 A1 3/2013 Kamm
2013/0086639 A1 4/2013 Sondhi et al.
2013/0093638 A1 4/2013 Shoemaker et al.
2013/0095875 A1 4/2013 Reuven et al.
2013/0108206 A1 5/2013 Sasaoka et al.
2013/0109317 A1 5/2013 Kikuchi et al.
2013/0117852 A1 5/2013 Stute et al.
2013/0122828 A1 5/2013 Choi et al.
2013/0124365 A1 5/2013 Pradeep
2013/0127678 A1 5/2013 Chandler et al.
2013/0136410 A1 5/2013 Sasaoka et al.
2013/0144750 A1 6/2013 Brown
2013/0159856 A1 6/2013 Ferren
2013/0160122 A1 6/2013 Choi et al.
2013/0162490 A1 6/2013 Blech et al.
2013/0166690 A1 6/2013 Shatzkamer et al.
2013/0169499 A1 7/2013 Lin et al.
2013/0173807 A1 7/2013 De Groot et al.
2013/0182804 A1 7/2013 Yutaka et al.
2013/0187636 A1 7/2013 Kast et al.
2013/0201904 A1 8/2013 Toskala et al.
2013/0207859 A1 8/2013 Legay et al.
2013/0234904 A1 9/2013 Blech et al.
2013/0235845 A1 9/2013 Kovvali et al.
2013/0235871 A1 9/2013 Brzozowski et al.
2013/0262656 A1 10/2013 Cao et al.
2013/0262857 A1 10/2013 Neuman et al.
2013/0263263 A1 10/2013 Narkolayev et al.
2013/0265732 A1 10/2013 Herbsommer et al.
2013/0279523 A1 10/2013 Denney et al.
2013/0279561 A1 10/2013 Jin et al.
2013/0279868 A1 10/2013 Zhang et al.
2013/0305369 A1 11/2013 Karta et al.
2013/0306351 A1 11/2013 Lambert et al.
2013/0311661 A1 11/2013 McPhee
2013/0314182 A1 11/2013 Takeda et al.
2013/0321225 A1 12/2013 Pettus et al.
2013/0326063 A1 12/2013 Burch et al.
2013/0326494 A1 12/2013 Nunez et al.
2013/0330050 A1 12/2013 Yang et al.
2013/0335165 A1 12/2013 Arnold et al.
2013/0341094 A1 12/2013 Taherian et al.

(56) **References Cited**

U.S. PATENT DOCUMENTS

2013/0343213 A1 12/2013 Reynolds et al.
2013/0343351 A1 12/2013 Sambhwani et al.
2014/0003394 A1 1/2014 Rubin et al.
2014/0003775 A1 1/2014 Ko et al.
2014/0007076 A1 1/2014 Kim et al.
2014/0009270 A1 1/2014 Yamazaki et al.
2014/0009822 A1 1/2014 Dong et al.
2014/0015705 A1 1/2014 Ebihara et al.
2014/0019576 A1 1/2014 Lobo et al.
2014/0026170 A1 1/2014 Francisco et al.
2014/0028184 A1 1/2014 Voronin et al.
2014/0028190 A1 1/2014 Voronin et al.
2014/0028532 A1 1/2014 Ehrenberg et al.
2014/0032005 A1 1/2014 Iwamura
2014/0041925 A1 2/2014 Siripurapu et al.
2014/0043189 A1 2/2014 Lee et al.
2014/0043977 A1 2/2014 Wiley et al.
2014/0044139 A1 2/2014 Dong et al.
2014/0052810 A1 2/2014 Osorio et al.
2014/0071818 A1 3/2014 Wang et al.
2014/0072299 A1 3/2014 Stapleton et al.
2014/0077995 A1 3/2014 Artemenko et al.
2014/0086080 A1 3/2014 Hui et al.
2014/0086152 A1 3/2014 Bontu et al.
2014/0124236 A1 5/2014 Vu et al.
2014/0126914 A1 5/2014 Berlin et al.
2014/0130111 A1 5/2014 Nulty et al.
2014/0132728 A1 5/2014 Verano et al.
2014/0143055 A1 5/2014 Johnson
2014/0155054 A1 6/2014 Henry et al.
2014/0165145 A1 6/2014 Baentsch et al.
2014/0169186 A1 6/2014 Zhu et al.
2014/0179302 A1 6/2014 Polehn et al.
2014/0189677 A1 7/2014 Curzi et al.
2014/0189732 A1 7/2014 Shkedi et al.
2014/0204754 A1 7/2014 Jeong et al.
2014/0207844 A1 7/2014 Mayo et al.
2014/0208272 A1 7/2014 Vats et al.
2014/0222997 A1 8/2014 Mermoud et al.
2014/0223527 A1 8/2014 Bortz et al.
2014/0225129 A1 8/2014 Inoue et al.
2014/0227905 A1 8/2014 Knott et al.
2014/0227966 A1 8/2014 Artemenko et al.
2014/0233900 A1 8/2014 Hugonnot et al.
2014/0241718 A1 8/2014 Jiang et al.
2014/0254516 A1 9/2014 Lee et al.
2014/0254896 A1 9/2014 Zhou et al.
2014/0254979 A1 9/2014 Zhang et al.
2014/0266946 A1 9/2014 Stevenson et al.
2014/0269260 A1 9/2014 Xue et al.
2014/0269972 A1 9/2014 Rada et al.
2014/0285277 A1 9/2014 Herbsommer et al.
2014/0285293 A1 9/2014 Schuppener et al.
2014/0286189 A1 9/2014 Kang et al.
2014/0287702 A1 9/2014 Schuppener et al.
2014/0299349 A1 10/2014 Yamaguchi et al.
2014/0304498 A1 10/2014 Gonuguntla et al.
2014/0317229 A1 10/2014 Hughes et al.
2014/0320364 A1 10/2014 Gu et al.
2014/0334773 A1 11/2014 Mathai et al.
2014/0334789 A1 11/2014 Matsuo et al.
2014/0351571 A1 11/2014 Jacobs
2014/0355525 A1 12/2014 Barzegar et al.
2014/0355989 A1 12/2014 Finkelstein
2014/0359275 A1 12/2014 Murugesan et al.
2014/0362374 A1 12/2014 Santori
2014/0362694 A1 12/2014 Rodrigues
2014/0369430 A1 12/2014 Parnell
2014/0373053 A1 12/2014 Leley et al.
2014/0376655 A1 12/2014 Ruan et al.
2015/0008996 A1 1/2015 Jessup et al.
2015/0009089 A1 1/2015 Pesa
2015/0017473 A1 1/2015 Verhoeven et al.
2015/0022399 A1 1/2015 Clymer et al.
2015/0026460 A1 1/2015 Walton
2015/0029065 A1 1/2015 Cheng
2015/0036610 A1 2/2015 Kim et al.
2015/0042526 A1 2/2015 Zeine
2015/0048238 A1 2/2015 Kawai
2015/0061859 A1 3/2015 Matsuoka et al.
2015/0065166 A1 3/2015 Ward et al.
2015/0071594 A1 3/2015 Register
2015/0077740 A1 3/2015 Fuse
2015/0084703 A1 3/2015 Sanduleanu
2015/0084814 A1 3/2015 Rojanski et al.
2015/0091650 A1 4/2015 Nobbe
2015/0099555 A1 4/2015 Krishnaswamy et al.
2015/0102972 A1 4/2015 Scire-Scappuzzo et al.
2015/0104005 A1 4/2015 Holman
2015/0109178 A1 4/2015 Hyde et al.
2015/0116154 A1 4/2015 Artemenko
2015/0122886 A1 5/2015 Koch
2015/0126107 A1 5/2015 Bennett et al.
2015/0130675 A1 5/2015 Parsche
2015/0138022 A1 5/2015 Takahashi
2015/0153248 A1 6/2015 Hayward et al.
2015/0156266 A1 6/2015 Gupta
2015/0162988 A1 6/2015 Henry et al.
2015/0172036 A1 6/2015 Katar et al.
2015/0195349 A1 7/2015 Cardamore
2015/0195719 A1 7/2015 Rahman
2015/0201228 A1 7/2015 Hasek
2015/0207527 A1 7/2015 Eliaz et al.
2015/0215268 A1 7/2015 Dinha
2015/0223078 A1 8/2015 Bennett et al.
2015/0236778 A1 8/2015 Jalali
2015/0236779 A1 8/2015 Jalali
2015/0249965 A1 9/2015 Dussmann et al.
2015/0271830 A1 9/2015 Shin et al.
2015/0276577 A1 10/2015 Ruege et al.
2015/0304045 A1 10/2015 Henry et al.
2015/0318610 A1 11/2015 Lee et al.
2015/0326274 A1 11/2015 Flood
2015/0333804 A1 11/2015 Yang et al.
2015/0373557 A1 12/2015 Bennett et al.
2016/0006129 A1 1/2016 Haziza
2016/0014749 A1 1/2016 Kang et al.
2016/0038074 A1 2/2016 Brown et al.
2016/0050028 A1 2/2016 Henry et al.
2016/0064794 A1 3/2016 Henry et al.
2016/0065252 A1 3/2016 Preschutti
2016/0065335 A1 3/2016 Koo et al.
2016/0068265 A1 3/2016 Hoareau et al.
2016/0068277 A1 3/2016 Manitta
2016/0069934 A1 3/2016 Saxby et al.
2016/0069935 A1 3/2016 Kreikebaum et al.
2016/0079769 A1 3/2016 Corum et al.
2016/0079809 A1 3/2016 Corum et al.
2016/0080035 A1 3/2016 Fuchs et al.
2016/0080839 A1 3/2016 Fuchs et al.
2016/0094879 A1 3/2016 Gerszberg et al.
2016/0099749 A1 4/2016 Bennett
2016/0100324 A1 4/2016 Henry et al.
2016/0105218 A1 4/2016 Henry
2016/0105233 A1 4/2016 Jalali
2016/0105239 A1 4/2016 Henry et al.
2016/0105255 A1 4/2016 Henry et al.
2016/0112092 A1 4/2016 Henry
2016/0112093 A1 4/2016 Barzegar
2016/0112094 A1 4/2016 Stuckman et al.
2016/0112115 A1 4/2016 Henry et al.
2016/0112132 A1 4/2016 Henry
2016/0112133 A1 4/2016 Henry et al.
2016/0112135 A1 4/2016 Henry et al.
2016/0112263 A1 4/2016 Henry et al.
2016/0116914 A1 4/2016 Mucci
2016/0149312 A1 5/2016 Henry et al.
2016/0149614 A1 5/2016 Barzegar
2016/0149636 A1 5/2016 Gerszberg et al.
2016/0149665 A1 5/2016 Henry et al.
2016/0149731 A1 5/2016 Henry et al.
2016/0149753 A1 5/2016 Gerszberg et al.
2016/0164571 A1 6/2016 Bennett et al.
2016/0164573 A1 6/2016 Birk et al.

(56) **References Cited**

U.S. PATENT DOCUMENTS

2016/0181701	A1	6/2016	Sangaran et al.
2016/0182161	A1	6/2016	Barzegar
2016/0182981	A1	6/2016	Minarik et al.
2016/0189101	A1	6/2016	Kantor et al.
2016/0197392	A1	7/2016	Henry et al.
2016/0197409	A1	7/2016	Henry et al.
2016/0197630	A1	7/2016	Kawasaki
2016/0197642	A1	7/2016	Henry et al.
2016/0214717	A1	7/2016	De Silva
2016/0218407	A1	7/2016	Henry et al.
2016/0221039	A1	8/2016	Fuchs et al.
2016/0226681	A1	8/2016	Henry et al.
2016/0248165	A1	8/2016	Henry
2016/0248509	A1	8/2016	Henry
2016/0261309	A1	9/2016	Henry
2016/0261310	A1	9/2016	Fuchs et al.
2016/0261312	A1	9/2016	Fuchs et al.
2016/0269156	A1	9/2016	Barzegar et al.

FOREIGN PATENT DOCUMENTS

AU	7261000	A	1/2001
AU	2010101079	A4	11/2010
AU	201400748		3/2014
AU	2014200748	A1	3/2014
CA	1136267	A1	11/1982
CA	2449596	A1	6/2005
CA	2515560	A1	2/2007
CA	2467988	C	11/2010
CA	2777147	A1	4/2011
CA	2787580	A1	2/2013
CN	1833397	A	9/2006
CN	1885736	A	12/2006
CN	201146495	Y	11/2008
CN	100502181	C	6/2009
CN	201282193	Y	7/2009
CN	101834011	U	4/2010
CN	1823275	B	5/2010
CN	1820482	B	12/2010
CN	102130698	A	7/2011
CN	102136634	A	7/2011
CN	102208716	A	10/2011
CN	102280704	A	12/2011
CN	202093126	U	12/2011
CN	102351415	A	2/2012
CN	202253536	U	5/2012
CN	102694351	A	9/2012
CN	101662076	B	11/2012
CN	103117118	A	5/2013
CN	103163881	A	6/2013
CN	203204743	U	9/2013
CN	103700442	A	4/2014
CN	103943925	A	7/2014
CN	104052742	A	9/2014
CN	203813973	U	9/2014
CN	104091987	A	10/2014
CN	203931626	U	11/2014
CN	203950607	U	11/2014
CN	205265924		1/2016
CN	105453340		3/2016
CN	105594138	A	5/2016
DE	3827956	A1	3/1989
DE	102007049914	A1	4/2009
DE	102012203816	A1	9/2013
EP	0110478		6/1984
EP	0136818		4/1985
EP	0280379		8/1988
EP	0330303		8/1989
EP	0331248		9/1989
EP	0342149		11/1989
EP	0391719		4/1990
EP	425979	A2	5/1991
EP	0651487		10/1994
EP	0371660		4/1996
EP	0756392		1/1997
EP	834722	A2	4/1998
EP	0871241	B1	10/1998
EP	0890132		1/1999
EP	755092	A3	4/1999
EP	0896380		10/1999
EP	1085599	A2	3/2001
EP	0756786		8/2001
EP	1127283	A1	8/2001
EP	1129550	A1	9/2001
EP	1184930	A1	3/2002
EP	1195847	A2	4/2002
EP	1237303	A2	9/2002
EP	1296146	A1	3/2003
EP	0772061		7/2003
EP	1346431	A1	9/2003
EP	1249056	B1	1/2004
EP	1376755	A1	1/2004
EP	1401048	A1	3/2004
EP	1454422	A1	9/2004
EP	1488397	A1	12/2004
EP	1371108	B1	6/2005
EP	1550327	A2	7/2005
EP	1341255	B8	8/2005
EP	1577687	A1	9/2005
EP	1624685	A2	2/2006
EP	1642468	A2	4/2006
EP	1608110	B1	10/2006
EP	1793508	A1	6/2007
EP	1898532	A2	3/2008
EP	1930982	A1	6/2008
EP	2165550	A1	3/2010
EP	1166599	B1	5/2010
EP	2404347	A2	1/2012
EP	2472671	A1	7/2012
EP	2568528	A2	3/2013
EP	2472737	B1	9/2013
EP	2854361	A1	4/2015
EP	2870802	A1	5/2015
FR	2119804	A1	8/1972
FR	2214161	A1	8/1974
FR	2691602	A1	11/1993
FR	2849728	A1	7/2004
GB	175489	A	2/1922
GB	462804	A	3/1937
GB	529290	A	11/1940
GB	640181	A	7/1950
GB	663166	A	12/1951
GB	667290	A	2/1952
GB	682817	A	11/1952
GB	731473	A	6/1955
GB	746111	A	3/1956
GB	751153	A	6/1956
GB	835976	A	6/1960
GB	845492	A	8/1960
GB	993561	A	5/1965
GB	1076772	A	7/1967
GB	1141390	A	1/1969
GB	1298387	A	11/1972
GB	1383549	A	2/1974
GB	1422956	A	1/1976
GB	1468310	A	3/1977
GB	1527228	A	10/1978
GB	2010528	A	6/1979
GB	2045055	A	10/1980
GB	2368468	A	5/2002
GB	2393370	A	3/2004
GB	2414862	A	12/2005
GB	2411554	B	1/2006
GB	714974	D0	9/2007
GB	2474037	A	4/2011
GB	2485355	A	5/2012
GB	2507269	A	4/2014
IN	7352/CHENP/2015	A	7/2016
IN	201647015348	A	8/2016
JP	S50109642		9/1975
JP	55124303	U	9/1980
JP	55138902	U	10/1980
JP	61260702	A	11/1986
JP	03167906	A	7/1991

(56) **References Cited**

FOREIGN PATENT DOCUMENTS

JP	0653894		8/1991
JP	3001844	U	9/1994
JP	08167810	A	6/1996
JP	08196022	A	7/1996
JP	08316918	A	11/1996
JP	2639531	B2	8/1997
JP	11239085	A	8/1999
JP	11313022	A	11/1999
JP	2000077889	A	3/2000
JP	2002029247	A	1/2002
JP	2003008336	A	1/2003
JP	2003057464	A	2/2003
JP	3411428	B2	6/2003
JP	2003324309	A	11/2003
JP	3480153	B2	12/2003
JP	2004521379	A	7/2004
JP	2004253853	A	9/2004
JP	2004297107	A	10/2004
JP	3734975	B2	1/2006
JP	2006153878	A	6/2006
JP	2006166399	A	6/2006
JP	2007259001	A	10/2007
JP	2008021483	A	1/2008
JP	4072280	B2	4/2008
JP	2009124229	A	6/2009
JP	2010192992	A	9/2010
JP	2012090242	A	5/2012
JP	2012205104	A	10/2012
JP	2013046412	A	3/2013
JP	2013110503	A	6/2013
JP	2014045237	A	3/2014
JP	5475475	B2	4/2014
JP	5497348	B2	5/2014
JP	2015188174		10/2015
KR	20000074034		12/2000
KR	200425873	Y1	9/2006
KR	101060584	B1	8/2011
KR	101070364	B1	9/2011
KR	101212354	B1	12/2012
KR	20140104097	A	8/2014
KR	101606803		1/2016
RU	2129746	C1	4/1999
RU	2432647	C1	10/2011
WO	8301711	A1	5/1983
WO	9210014		6/1992
WO	9323928		11/1993
WO	9424467	A1	10/1994
WO	9529537		11/1995
WO	9529537	A1	11/1995
WO	9619089		6/1996
WO	WO 96/41157		12/1996
WO	9735387	A1	9/1997
WO	9737445	A1	10/1997
WO	9829853	A1	7/1998
WO	WO 98/57207		12/1998
WO	9948230	A1	9/1999
WO	9967903	A1	12/1999
WO	0070891	A1	11/2000
WO	0074428	A1	12/2000
WO	WO0114985	A1	3/2001
WO	0145206	A1	6/2001
WO	02061467	A2	8/2002
WO	03026166		3/2003
WO	03044981	A1	5/2003
WO	03088418		10/2003
WO	03099740	A1	12/2003
WO	2004011995	A1	2/2004
WO	2004038891	A2	5/2004
WO	2004/051804		6/2004
WO	2004051804	A1	6/2004
WO	2004054159	A2	6/2004
WO	2004077746	A1	9/2004
WO	2006012610	A2	2/2006
WO	2006085804	A1	8/2006
WO	2006116396	A2	11/2006
WO	2006125279	A1	11/2006
WO	2006050331	A3	3/2007
WO	2007031435	A1	3/2007
WO	2007071797	A1	6/2007
WO	2007148097	A2	12/2007
WO	2008003939	A1	1/2008
WO	2008070957	A1	6/2008
WO	2008117973	A1	10/2008
WO	2009014704	A1	1/2009
WO	2007098061	A3	2/2009
WO	2009035285	A2	3/2009
WO	2009090602	A1	7/2009
WO	2010017549	A1	2/2010
WO	2010147806	A1	12/2010
WO	2011032605	A1	3/2011
WO	2011137793	A1	11/2011
WO	2012/007831		1/2012
WO	2012038816	A1	3/2012
WO	2012172565	A1	12/2012
WO	2013013162	A2	1/2013
WO	WO 2013/017822		2/2013
WO	2013035110	A2	3/2013
WO	2013/073548		5/2013
WO	2013073548	A1	5/2013
WO	2013100912	A1	7/2013
WO	2013115802	A1	8/2013
WO	2013123445	A1	8/2013
WO	2013/138627		9/2013
WO	2014/045236		9/2013
WO	2013136213	A1	9/2013
WO	2013138627	A1	9/2013
WO	2013157978	A1	10/2013
WO	2014/018434		1/2014
WO	2014011438	A1	1/2014
WO	2014018434	A2	1/2014
WO	2014065952	A1	5/2014
WO	2014069941	A1	5/2014
WO	2014099340	A2	6/2014
WO	2013076499	A3	7/2014
WO	2014128253	A1	8/2014
WO	2014145862	A2	9/2014
WO	2014197926	A1	12/2014
WO	2015002658	A1	1/2015
WO	2015006636	A1	1/2015
WO	2015027033	A1	2/2015
WO	2015035463	A1	3/2015
WO	2015/055230		4/2015
WO	2015052478		4/2015
WO	2015052480		4/2015
WO	2015069431	A2	5/2015
WO	2015077644		5/2015
WO	2015088650	A1	6/2015
WO	2016003291	A1	1/2016
WO	WO 2016/012889		1/2016
WO	2016/043949		3/2016
WO	2016048214	A1	3/2016
WO	2016061021	A1	4/2016
WO	2016064516	A1	4/2016
WO	WO 2016/064502		4/2016
WO	2016081125		5/2016
WO	2016081128		5/2016
WO	2016081134		5/2016
WO	2016081136		5/2016
WO	2015090382		6/2016
WO	2016089491		6/2016
WO	2016089492	A1	6/2016
WO	WO 2016/125161		8/2016
WO	WO 2016/133509		8/2016
WO	WO 2016/137982		9/2016

OTHER PUBLICATIONS

International Search Report PCT/US2016/036292 mailed Sep. 13, 2016.

PCT/US16/027397 International Search Report & Written Opinion mailed Jun. 24, 2016.

PCT/US16/027398 International Search Report and Written Opinion mailed Jun. 24, 2016.

(56) **References Cited**

OTHER PUBLICATIONS

PCT/US16/027403 International Search Report & Written Opinion mailed Jun. 22, 2016.
PCT/US16/028395 International Search Report and Written Opinion mailed Jun. 29, 2016.
PCT/US16/032441 International Search Report and Written Opinion mailed Jul. 29, 2016.
PCT/US16/036284 International Search Report & Written Opinion mailed Sep. 8, 2016.
PCT/US16/036388 International Search Report and Written Opinion mailed Aug. 30, 2016.
PCT/US2016/036285 International Search Report and Written Opinion mailed Aug. 23, 2016.
PCT/US2016/036288 International Search Report & Written Opinion mailed Sep. 1, 2016.
PCT/US2016/036290 International Search Report & Written Opinion mailed Aug. 11, 2016.
"Cband & L/Sband Telemetry Horn Antennas," mWAVE, mwavellc.com, http://www.mwavellc.com/custom-Band-LS-BandTelemetryHornAntennas.php, Jul. 6, 2012.
"Product Abstract—Program on Technology Innovation: Study on the Integration of High Temperature Superconducting DC Cables Within the Eastern and West urn North American Power Grids." EPRI—Electronic Power Research Institute, epri.com, Product ID:10203, Nov. 25, 2009.
"Boost: The world's first WI-FI extending led bulb," Sengled, sengled.com, http://www.sengled.com/sites/default/files/field/product/downloads/manual/a01-a60__na__user__manual.pdf, Dec. 2014.
"Examples of Cell Antennas," RF Check®, rfcheck.com, https://web.archive.org/web/20100201214318/http://www.rfcheck.com/Examplesof-Cell-Antennas.php, Feb. 1, 2010.
"Flashing Light: IR.Lamp," Beninca®, beninca.com, http://www.beninca.com/en/news/2015/02/23/lampeggiante-irlamp.html, Feb. 23, 2015.
"An Improved Solid Dielectric Lens Impulse Radiating Antenna," SBIR/STTR, DoD, sbir.gov., 2004.
"Power line communications: An overview Part I." King Fahd University of Petroleum and Minerals, Dhahran, KSA., 2008.
"Power Line Communications," Atmel®, atmel.com http://www.atmel.com/products/smartenergy/powerlinecommunications/default.aspx., 2015.
"Integrated Radio Masts Fully camouflaged Outdoor-Wi-Fi APs in GRP-lamp poles," Brown-iposs, brown-iposs.com., Mar. 21, 2014.
"How is ELine Different?," ELine Corridor Systems, corridor.biz http://www.corridor.biz/ELine__is__different.html., Apr. 23, 2015.
"Powerline Communication," Cypress Perform, cypress.com http://www.cypress.com/?id=2330., Apr. 23, 2015.
"Products: GSM Mircro Repeater." L-Tel: Quanzhou L-Tel Communication Equipment Co., Ltd., l-tel.com., Apr. 24, 2015.
"New Wi-Fi antenna enhances wireless coverage," ScienceDailye®, sciencedaily.com., Apr. 29, 2015.
"Dielectric Antenna," Microwave Technologies, Ind., microwavetechnologiesinc.co.in http://www.microwavetechnologiesinc.co.in/microwavecommunicationlabproducts.html#dielectricantenna, May 21, 2015.
"Horn Antennas," Steatite QPar Antennas, steatiteqparantennas.co.uk, http://www.steatiteqparantennas.co.uk/products hornantennas.html? http://www.steatiteqparantennas.co.uk/consultancy/customhornantennas/., May 21, 2015.
"24 Volt D.C Flashing Light With Built-in Antenna 433Mhz, DEA+ Product Guide" Meteor electrical, meteorelectrical.com, Code: LUMY/24A., Jul. 28, 2010.
"Waveguide-fed Conical Horn," Antenna Magus, antennamagus.com, © 2015, accessed:, Aug. 2015.
"Identity Management," Tuomas Aura CSE-C3400 Information Security, Aalto University, 33 pgs., Autumn 2014.
"Power Communication," Communication Power Solutions, Inc., cpspower.biz, http://www.cpspower.biz/services/powercommunications/., Oct. 2013.
http://sdpm.arizona.edu/projects/project-public/upid/38a8cf3b42f35576de25de1f6dcc20f3, Discloses a project to harvest energy from a power line and that a device was built that clamps onto a power line., 2016.
"A Dielectric Lens Antenna with Enhanced Aperture Efficiency for Industrial Radar Applications", Computer Simulation Technology, cst.com, May 10, 2011.
"A New Approach to Outdoor DAS Network Physical Layer Using E-Line Technology", Corridor Systems, Mar. 2011, 5 pages.
"About Firelight Media Group", http://www.insurancetechnologies.com/Products/Products_firelight_overviewshtml, Firelight®. Insurance Technologies, LLC, Apr. 19, 2015.
"Alternative Local Loop Technologies: A Review", Organisation for Economic Co-Operation and Development, Paris, OCDE/GD(96)181, https://www.oecd.org/sti/2090965.pdf, 1996.
"Asahi Multi-Core Fiber Cable", Industrial Fiber optics, i-fiberoptics.com http://i-fiberoptics.com/multi-core-fiber-cable.php, Apr. 26, 2015.
"Bi-Axial PA Horn with Gimbal Mount", Atlas Sound, MCM Electronics, mcmelectronics.com, MCM Part #555-13580., 2011.
"Broadband Negligible Loss Metamaterials", Computer Electmagnetics and Antennas Research Laboratory, cearl.ee.psu.edu., May 15, 2012.
"Broadband: Bringing Home the Bits: Chapter 4 Technology Options and Economic Factors", The National Academies Press, nap.edu, 2002.
"Cisco IP VSAT Satellite WAN Network Module for Cisco Integrated Services Routers", http://www.cisco.com/c/en/us/products/collateral/interfaces-modules/ip-vsatsatellite-wan-module/product__data__sheet0900aecd804bbf6f.html, Jul. 23, 2014.
"Cloud Management", Cisco Meraki, cisco.com., Sep. 11, 2015.
"Decryption: Identify & Control Encrypted Traffic", Palo Alto Networks, paloaltonetworks.com, Mar. 7, 2011.
"Delivering broadband over existing wiring", Cabling Installation & Maintenance, cablinginstall.com, May 1, 2002.
"Denso", Winn & Coales (Denso) Ltd. UK, denso.net, http://www.denso.net/voidfiller/voidpump.htm, 2015, 1 page.
"Detecting and Preventing MAC Spoofing", Detecting and Preventing MAC Spoofing | Network Access Control Solutions, infoexpress, 2014.
"Electronic Business Fulfillment FireLight ®", Firelight Media Group LLC, firelightmedia.net http://www.firelightmedia.net/fmg/index.php/home, Apr. 19, 2015, 2 pages.
"Elliptical Polarization", "Elliptical Polarization" Wikipedia, <http://en.wikipedia.org/wiki/Elliptical__polarization>, 3 pgs., Apr. 21, 2015.
"Exacter Outage-Avoidance System", http://www.epri.com/abstracts/Pages/ProductAbstract.aspx?ProductId=000000000001020393, Nov. 30, 2009.
"Fast Numerical Modeling of a Conical Horns Lens Antenna", Comsol, comsol.com, Application ID: 18695, Sep. 16, 2016.
"GM-12 Gimbal Mount", Newmark System, Inc, newmarksystems.com., 2015.
"Harvest energy from powerline", https://www.physicsforums.com/threads/harvest-energy-from-powerline.685148/, Discussion thread about harvesting power from powerlines that includes the suggestion of clamping a device to the power line., 2013.
"HiveManager Network Management System", Aerohive® Networks, aerohive.com., Sep. 2015.
"Home", Darktrace, darktrace.com, Jul. 10, 2014.
"How To Use STUF", STUF Page Link Info, crossdevices.com, http://www.crossdevices.com/cross__devices__010.htm, 2015, 1 page.
"IEEE Standard for Information technology—Local and metropolitan area networks—Specific requirements", Part 15.4: Wireless Medium Access Control (MAC) and Physical Layer (PHY) Specifications for Low Rate Wireless Personal Area Networks (WPANs), in IEEE Std 802.15.4, (Revision of IEEE Std 802.15.4-2003), Sep. 7, 2006, 1-320.
"Installing Satellite Accessories", ACE®, acehardware.com., May 8, 2006.
"International Preliminary Report on Patentability", PCT/US2014/039746, Dec. 10, 2015.

(56) **References Cited**

OTHER PUBLICATIONS

"International Preliminary Report on Patentability", PCT/US2014/060841, May 19, 2016, 8 pages.
"International Preliminary Report on Patentability & Written Opinion", PCT/US2014/061445, Jun. 23, 2016, 9 pages.
"International Search Report & Written Opinion", PCT/US2015/034827, Sep. 30, 2015.
"International Search Report & Written Opinion", PCT/US2015/056316, Jan. 21, 2016.
"International Search Report & Written Opinion", PCT/US2015/056320, Jan. 29, 2016.
"International Search Report & Written Opinion", PCT/US2015/056365, Jan. 22, 2016.
"International Search Report & Written Opinion", PCT/US2015/056368, Jan. 25, 2016.
"International Search Report & Written Opinion", PCT/US2015/056598, Jan. 28, 2016.
"International Search Report & Written Opinion", PCT/US2015/056615, Jan. 21, 2016.
"International Search Report & Written Opinion", PCT/US2015/056626, Jan. 21, 2016.
"International Search Report & Written Opinion", PCT/US2015/056632, Jan. 26, 2016.
"International Search Report & Written Opinion", PCT/US2016/013988, Apr. 8, 2016.
"International Search Report & Written Opinion", PCT/US2016/020001, May 23, 2016.
"International Search Report & Written Opinion", PCT/US2016/026860, Jun. 1, 2016.
"International Search Report & Written Opinion", PCT/US2016/026318, Jun. 15, 2016.
"International Search Report & Written Opinion", PCT/US2016/028412, Jun. 27, 2016.
"International Search Report & Written Opinion", PCT/US2016/028206, Jun. 29, 2016.
"International Search Report & Written Opinion", PCT/US16/033182, Jul. 12, 2016.
"International Search Report & Written Opinion", PCT/US2016/036551, Aug. 11, 2016.
"International Search Report & Written Opinion", PCT/US2016/036798, Aug. 11, 2016.
"International Search Report & Written Opinion", PCT/US2016/028205, Aug. 16, 2016.
"International Search Report & Written Opinion", PCT/US2016/032460, Aug. 17, 2016.
"International Search Report & Written Opinion", PCT/US2016/036303, Aug. 24, 2016.
"International Search Report & Written Opinion", PCT/2016/035383, Sep. 2, 2016.
"International Search Report & Written Opinion", PCT/US2014/039746, Jan. 12, 2015.
"International Search Report & Written Opinion", PCT/US2014/060841, Jan. 7, 2015.
"International Search Report & Written Opinion", PCT/US2015/039848, Oct. 20, 2015.
"International Search Report & Written Opinion", PCT/US2015/047315, Oct. 30, 2015.
"International Search Report & Written Opinion", PCT/US2015/048454, Nov. 11, 2015.
"International Search Report & Written Opinion", PCT/US2015/049928, Nov. 16, 2015.
"International Search Report & Written Opinion", PCT/US2015/049932, Nov. 16, 2015.
"International Search Report & Written Opinion", PCT/US2015/049927, Nov. 24, 2015.
"International Search Report & Written Opinion", PCT/US2015/051193, Nov. 27, 2015.
"International Search Report & Written Opinion", PCT/US2015/051146, Dec. 15, 2015.
"International Search Report & Written Opinion", PCT/US2015/051183, Dec. 15, 2015.
"International Search Report & Written Opinion", PCT/US2015/051194, Dec. 15, 2015.
"International Search Report & Written Opinion", PCT/US2015/051578, Dec. 17, 2015.
"International Search Report & Written Opinion", PCT/US2015/051583, Dec. 21, 2015.
"International Search Report & Written Opinion", PCT/US2015/048458, Dec. 23, 2015.
"International Search Report & Written Opinion", PCT/US2015/051213, Dec. 4, 2015.
"International Search Report & Written Opinion", PCT/US2015/051163, Dec. 7, 2015.
"International Search Report & Written Opinion", PCT/US2014/061445, Feb. 10, 2015.
"International Search Report & Written Opinion", PCT/US16/28207, Jun. 15, 2016.
"International Search Report & Written Opinion", PCT/US2016/015501, Apr. 29, 2016, 11 pages.
"International Search Report & Written Opinion", PCT/US2015/047225, mailed Nov. 6, 2015, Nov. 6, 2015.
"International Search Report and Written Opinion", PCT/US2016/028197, Jun. 24, 2016.
"International Search Report and Written Opinion", PCT/US2016/036289, Aug. 11, 2016.
"International Search Report and Written Opinion", PCT/US2016/036295, Aug. 30, 2016.
"International Search Report and Written Opinion", PCT/US2016/030964, Aug. 4, 2016.
"International Search Report and Written Opinion", mailed Aug. 30, 2016, 1-14.
"Invitation to Pay Additional Fees & Partial Search Report", PCT/US2016/028205, Jun. 22, 2016.
"Invitation to Pay Additional Fees & Partial Search Report", PCT/US2016/032430, Jun. 22, 2016.
"Invitation to Pay Additional Fees And, Where Applicable, Protest Fee", PCT/US2016/035384, Aug. 31, 2016, 7 pages.
"Ipitek All-Optical Sensors", http://www.ipitek.com/solutions-by-industry/all-optical-sensors., Jun. 2, 2014.
"Lens Antennas", Altair, feko.info, Jun. 30, 2014, 2 pages.
"mmWave Axial Choke Horn Antenna with Lens", Feko, Sep. 24, 2013.
"Network technology", nbnTM, nbnco.com.au, Jun. 27, 2014.
"Norse Appliance™: Block attacks before they target your network, and dramatically improve the ROI on your entire security infrastructure", norsecorp.com, 2015.
"Out-of-Band Mgmt", Cradle Point, cradlepoint.com., Sep. 2015.
"Out-of-Band Security Solution", Gigamon®, gigamon.com., Aug. 3, 2014.
"PCT International Search Report & Written Opinion", PCT/US2016/026193, Jun. 1, 2016.
"PCT Search Report and Written opinion", PCT/US2016/036297, Sep. 5, 2016.
"Powerline—Juice Up Your Network With Powerline", Netgear®, netgear.com http://www.netgear.com/home/products/networking/powerline/, Apr. 21, 2015, 3 pages.
"PRO 600 SIRIUS XM Radio Amplified Outdoor Antenna", Pixel Technologies, Oct. 3, 2014.
"Product Overview: Introducing SilentDefense", Security Matters, secmatters.com, Nov. 9, 2013.
"Quickly identify malicious traffics: Detect", Lancope®, lancope.com, Mar. 15, 2015.
"radar at st Andrews", mmwaves.epr, st-andrews.ac.uk., Feb. 4, 2011.
"Resilience to Smart Meter Disconnect Attacks", ADSC Illinois at Singapore PTE, LTD., publish.illinois.edu http://publish.illinois.edu/integrativesecurityassessment/resiliencetosmartmeterdisconnectattacks/, 2015.
"RF Sensor Node Development Platform for 6LoWPAN and 2.4 GHz Applications", http://www.ti.com/tool/TIDM-RF-SENSORNODE., Jun. 2, 2014.

(56) **References Cited**

OTHER PUBLICATIONS

"Smart Out-Of-Band Management", Open Gear, opengear.com., Sep. 2015.
"Tapered waveguide", Lumerical Solutions, Inc., docs.lumerical.com., 2010.
"Tapered Waveguides Improve Fiber Light Coupling Efficiency", Tech Briefs, techbriefs.com, Molex Inc., Downers Grove, Illinois and KiloLambda Technologies Ltd., Tel Aviv, Israel., Jan. 1, 2006.
"Transducer", IEEE Std 100-2000, Sep. 21, 2015, 1154.
"Troubleshooting Problems Affecting Radio Frequency Communication", cisco.com, Oct. 19, 2009.
"Waveguide Bragg Microcavity", lumerical.com, Sep. 2016.
"Wireless powerline sensor", wikipedia.org, http://en.wikipedia.org/wiki/Wireless_powerline_sensor, 2014, 3 pages.
Akiba, Shigeyuki et al., "Photonic Architecture for Beam Forming of RF Phased Array Antenna", Optical Fiber Communication Conference. Optical Society of America., Abstract Only, 2014.
Alam, M N et al., "Novel surface wave exciters for power line fault detection and communications", Antennas and Propagation (APSURSI), IEEE International Symposium on, IEEE, pp. 1139-1142, Jul. 3, 2011.
Alam, M.N. et al., "Novel surface wave exciters for power line fault detection and communications." Antennas and Propagation (APSURSI), 2011 IEEE International Symposium on. IEEE, 2011.
Alam, MD N. et al., "Design and Application of Surface Wave Sensors for nonintrusive Power Line Fault Detection," IEEE Sensors Journal, IEEE Service Center, New York, NY, US, vol. 13, No. 1, pp. 339-347, Jan. 1, 2013.
Ali, Muhammad Q. et al., "Randomizing AMI configuration for proactive defense in smart grid", Smart Grid Communications (SmartGridComm), IEEE International Conference on. IEEE, Abstract Only, http://ieeexplore.ieee.org/xpl/login.jsp?tp=&arnumber=6688027, 2013.
Angove, Alex "Direct Bury Duct Assemblies, MPB 302 3+– Ribbonet Microducts", Ericsson, archive.ericsson.net, Jul. 30, 2014.
Angove, Alex "How the NBN Differs from ADSL2+, Cable and Wireless", Whistle Out, whistleout.com.au, Jul. 30, 2014.
Arage, Alebel et al., "Measurement of wet antenna effects on millimetre wave propagation", Radar, IEEE Conference on IEEE., Abstract Only, 2006.
Arthur, Joseph Kweku "Improving QoS in UMTS Network in ACCRA Business District Using Tower-Less Towers", IPASJ International Journal of Electrical Engineering (IIJEE), vol. 2, Issue 11., Nov. 2014.
Asadallahi, Sina et al., "Performance comparison of CSMA/CA Advanced Infrared (Alr) and a new pointtomultipoint optical MAC protocol." Wireless Communications and Mobile Computing Conference (IWCMC), 2012 8th International. IEEE., Abstract Only, 2012.
Atwater, Harry A. "The promise of plasmonics." Scientific American 296.4: 56-62., 2007.
Bach, Christian "Current Sensor—Power Line Monitoring for Energy Demand Control", Application Note 308, http://www.enocean.com/fileadmin/redaktion/pdf/app_notes/AN308_Current_Sensor_Jan09.pdf, Jan. 2009, 4 pages.
Barron, Ashleigh L. "Integrated Multicore Fibre Devices for Optical Trapping", Diss. Heriot-Watt University, 2014, 11-15.
Beal, J.C. et al., "Coaxial-slot surface-wave launcher", Electronics Letters 4.25: 557559, Abstract Only, 1968.
Benevent, Evangéline "Transmission lines in MMIC technology", Universitá Mediterranea di Reggio Calabria, Jan. 28, 2010.
Berweger, Samuel et al., "Light on the Tip of a Needle: Plasmonic Nanofocusing for Spectroscopy on the Nanoscale", The Journal of Physical Chemistry Letters; pubs.acs.org/JPCL, 2012, 945-952.
Bhushan, Naga "Network densification: the dominant theme for wireless evolution into 5G", Communications Magazine, IEEE 52.2: 82-89, 2014.
Bing, Benny "Ubiquitous Broadband Access Networks with Peer-to-Peer Application Support", Evolving the Access Network: 27-36, 2006.
Bing, Benny "Ubiquitous Broadband Access Networks with Peer-to-Peer Application Support", Evolving the Access Network, 2006, 27-36.
Bock, James et al., "Optical coupling." Journal of Physics: Conference Series. vol. 155. No. 1. IOP Publishing., 2009.
Bowen, Leland H. et al., "A Solid Dielectric Lens Impulse Radiating Antenna with High Dielectric Constant Surrounded by a Cylindrical Shroud," Sensor and Simulation Note 498., Introduction, Apr. 2005, 3 pages.
Brambilla, Gilberto et al., "Ultra-low-loss optical fiber nanotapers", Optoelectronics Research Centre, University of Southampton; http://www.orc.soton.ac.uk, vol. 12, No. 10, May 7, 2004, 2258-2263.
Bridges, Greg E. et al., "Plane wave coupling to multiple conductor transmission lines above a lossy earth", Compatibility, IEEE Transactions on 31.1, Abstract Only, 1989, 21-33.
Brooke, Gary H. Properties of surface waveguides with discontinuities and perturbations in cross-section. Diss. University of British Columbia, 1977., 1977.
Brown, J. et al., "The launching of radial cylindrical surface waves by a circumferential slot", Proceedings of the IEE Part B: Radio and Electronic Engineering 106.26: 123128., Abstract Only, 1959.
Bruno, Joseph "Interference Reduction in Wireless Networks", Computing Research Topics, Computing Sciences Department, Villanova University, Nov. 14, 2007, 8 pages.
Burkhart, Martin et al., "Does Topology Control Reduce Interference?", Department of Computer Science, ETH Zurich, Proceedings of the 5th ACM international symposium on Mobile ad hoc networking and computing, ACM, 2004, 11 pages.
Callis, et al., "An In-Line Power Monitor for HE11 Low Loss Transmission Lines", Proceedings of the 29th International Conference on Infrared and Millimeter Waves (IRMMW), Karlsruhe, Germany, 2004.
Capece, P. et al., "FDTD Analysis of a Circular Coaxial Feeder for Reflector Antenna", Antennas and Propagation Society International Symposium, IEEE Digest, vol. 3, 1997, pp. 1570-1573.
Carroll, John M. et al., "Developing the Blacksburg electronic village", Communications of the ACM 39.12: 69-74, 1996.
Chandra, Shekar "Transmission Line Fault Detection & Indication through GSM", IRD India, ISSN (Online): 2347-2812, vol. 2, lss. 5, 2014.
Chen, Dong et al., "A trust management model based on fuzzy reputation for internet of things", Computer Science and Information Systems 8.4: 12071228, Abstract Only, 2011.
Chen, Yingying "Detecting and Localizing Wireless Spoofing Attacks", Sensor, Mesh and Ad Hoc Communications and Networks, SECON'07. 4th Annual IEEE Communications Society Conference on IEEE, 2007, 10 pages.
Chiba, Jiro "Experimental Studies of the Losses and Radiations Due to Bends in the Goubau Line", IEEE Transactions on Microwave Theory and Techniques, Feb. 1977, 94-100.
Chiba, Jiro "On the Equivalent Circuit for the G-Line Above Ground", International Wroclaw Symposium on Electromagnetic Compatibility, 1998, 78-82.
Choudhury, Romit R. "Utilizing Beamforming Antennas for Wireless Mult-hop Networks", www.slideserve.com, Sep. 20, 2012.
Chu, Eunmi et al., Self-organizing and self-healing mechanisms in cooperative small cell networks. PIMRC. 2013.
Cimini, Carlos Alberto et al., "Temperature profile of progressive damaged overhead electrical conductors", Journal of Electrical Power & Energy Systems 49: 280-286., 2013.
Costantine, Joseph et al., "The analysis of a reconfigurable antenna with a rotating feed using graph models", Antennas and Wireless Propagation Letters 8: 943-946, 2009.
Covington, Michael J. et al., "Threat implications of the internet of things", Cyber Conflict (CyCon), 2013 5th International Conference on. IEEE., Abstract Only, 2013.
Crane, Robert K. "Analysis of the effects of water on the ACTS propagation terminal antenna", Antennas and Propagation, IEEE Transactions on 50.7: 954965, Abstract Only, 2002.
Daniel, Kai et al., "Using Public Network Infrastructures for UAV Remote Sensing in Civilian Security Operations", Homeland Security Affairs, Supplement 3, Mar. 2011, 11 pages.

(56) **References Cited**

OTHER PUBLICATIONS

De Sabata, Aldo et al., "Universitatea Politehnica", din Timişoara Facultatea de Electronică şi Telecomunicaţii., 2012.
Dini, Gianluca et al., "Madam: A Multilevel Anomaly Detector for Android Malware", MMMACNS. vol. 12, 2012.
Doane, J.L. et al., "Oversized rectangular waveguides with modefree bends and twists for broadband applications", Microwave Journal 32(3), Abstract Only, 1989, 153-160.
Doelitzscher, et al., "ViteraaS: Virtual cluster as a service." Cloud Computing Technology and Science (CloudCom), 2011 IEEE Third International Conference on. IEEE., 2011.
Dooley, Kevin "Out-of-Band Management", auvik, auvik.com., Apr. 12, 2014.
Doshi, D.A. et al., "Real Time Fault Failure Detection in Power Distribution Line using Power Line Communication", International Journal of Engineering Science 4834, 2016.
Dostert, Klaus "Frequency-hopping spread-spectrum modulation for digital communications over electrical power lines." Selected Areas in Communications, IEEE Journal on 8.4: 700-710., Abstract Only, 1990.
Dragoo, R.E. et al., "Fiber Optic Data Bus for the AN/GYQ21(V)." Harris Corp, U.S. Communications Syst. Div. Chart, Microcopy Resolution Test, 1980.
Dutton, Harry Jr. "Understanding Optical Communications", International Technical Support Organization, SG24-5230-00., Sep. 1998.
Ehyaie, Danial "Novel Approaches to the Design of Phased Array Antennas," Diss. The University of Michigan., 2011.
Elmore, Glenn "Introduction to the Propagating Wave on a Single Conductor", www.corridor.biz, Jul. 27, 2009, 30 pages.
Erickson, Katherine "Conductive cylindrical surface waveguides." https://www.ideals.illinois.edu/bitstream/handle/2142/30914/Erickson_Katherine.pdf?sequence=1, 2012.
Erickson, Katherine "Conductive cylindrical surface waveguides", 2012.
Eskelinen, Harri "DFM (A)-aspects for a horn antenna design," Lappeenranta University of Technology., 2004.
Eskelinen, P. "A low-cost microwave rotary joint," International Radar Conference, 13-17, p. 1-4., Abstract Only, Oct. 2014, 1 page.
Farzaneh, Masoud et al., "Systems for Prediction and Monitoring of Ice Shedding, Anti-Cicing and De-Icing for Power Line Conductors and Ground Wires", Dec. 1, 2010, 1-100.
Feng, Taiming et al., "Design of a survivable hybrid wireless-optical broadband-access network", Journal of Optical Communications and Networking 3.5, 2011, 458-464.
Feng, Wei et al., Downlink power allocation for distributed antenna systems in a multi-cell environment. 2009 5th International Conference on Wireless Communications, Networking and Mobile Computing. IEEE, 2009., 2009.
Fenye, Bao et al., "Dynamic trust management for internet of things applications", Proceedings of the 2012 international workshop on Selfaware internet of things. ACM, Abstract Only, 2012, 1 page.
Fitzgerald, William D. "A 35-GHz Beam Waveguide System for the Millimeter-Wave Radar", The Lincoln Laboratory Journal, vol. 5, No. 2, 1992, 245-272.
Ford, Steven AT&T's new antenna system will boost cellular coverage at Walt Disney World. Orlando Sentinel, orlandosentinel.com, Mar. 9, 2014., 2014.
Freyer, Dan "Combating The Challenges Of Ka-Band Signal Degradation", SatMagazine, satmagzine.com., Sep. 2014.
Friedman, M et al., "Low-loss RF transport over long distances," IEEE Transactions on Microwave Theory and Techniques, Jan. 1, 2001, pp. 341-348.
Friedman, M et al., "Low-Loss RF Transport Over Long Distances", IEEE Transactions on Microwave Theory and Techniques, vol. 49, No. 2, Feb. 2001, 8 pages.
Friedman, M. et al., "Low-Loss RF Transport Over Long Distances", IEEE Transactions on Microwave Theory an Techniques, vol. 49, No. 2, Feb. 2001, 341-348.
Fromm, W. et al., "A new microwave rotary joint," 1958 IRE International Convention Record, 21-25, 6:78-82., Abstract Only, Mar. 1966, 2 pages.
Garcia-Etxarri, Aitzol et al., "A combination of concave/convex surfaces for fieldenhancement optimization: the indented nanocone", Optics express 20.23, 2012, 2520125212.
Geterud, Erik "Design and Optimization of Wideband Hat-Fed Reflector Antenna with Radome for Satellite Earth Station", http://publications.lib.chalmers.se/records/fulltext/163718.pdf, Discloses Frequency Selective Surfaces for antenna coverings for weather protection (table of materials on p. 29-30; pp. 37-46)., 2012.
Ghazisaidi, Navid et al., "Survivability analysis of next-generation passive optical networks and fiber-wireless access networks", Reliability, IEEE Transactions on 60.2, 2011, 479-492.
Gloeckler, R "Phased Array for Millimeter Wave Frequencies", International Journal of Infrared and Millimeter Waves, Springer, vol. 11, No. 2, Feb. 1, 1990.
Goldsmith, P.F. "Quasi-optical techniques", Proceedings of the IEEE., vol. 80, No. 11, Nov. 1, 1992.
Golrezaei, Negin et al., "FemtoCaching: Wireless Video Content Delivery through Distributed Caching Helpers", INFOCOM, Proceedings IEEE, 2012.
Gomes, Nathan J. et al., "Radio-over-fiber transport for the support of wireless broadband services", Journal of Optical Networking 8.2: 156-178., 2009.
Gonthier, François et al., "Mode coupling in nonuniform fibers: comparison between coupled-mode theory and finite-difference beam-propagation method simulations", JOSA B 8.2: 416421, Abstract Only, 1991, 3 pages.
Gritzalis, Dimitris et al., "The Sphinx enigma in critical VoIP infrastructures: Human or botnet?." Information, Intelligence, Systems and Applications (IISA), 2013 Fourth International Conference, IEEE., 2013.
Hadi, Ghozali S. et al., "Autonomous UAV System Development for Payload Dropping Mission", The Journal of Instrumentation, Automation and Systems, vol. 1, No. 2, 2014, pp. 72-22.
Haider, Muhammad Kumail et al., Mobility resilience and overhead constrained adaptation in directional 60 GHz WLANs: protocol design and system implementation. Proceedings of the 17th ACM International Symposium on Mobile Ad Hoc Networking and Computing. ACM, 2016., 2016.
Han, Chong et al., "crosslayer communication module for the Internet of Things", Computer Networks 57.3: 622633, Abstract Only, 2013, 1 page.
Haroun, Ibrahim et al., "WLANs meet fiber optics-Evaluating 802.11 a WLANs over fiber optics links", RF Des. Mag: 36-39., 2003.
Hassan, Karim "Fabrication and characterization of thermo-plasmonic routers for telecom applications", Diss. Univ. de Bourgogne., 2014.
Hassan, Maaly A. "Interference reduction in mobile ad hoc and sensor networks", Journal of Engineering and Computer Innovations vol. 2(7), Sep. 2011, 138-154.
Hassani, Alireza et al., "Porous polymer fibers for low-loss Terahertz guiding." Optics express 16.9: 6340-6351., 2008.
Hautakorpi, Jani et al., "Requirements from Session Initiation Protocol (SIP) Session Border Control (SBC) Deployments." RFC5853, IETF (2010)., 2010.
Hawrylyshen, A. et al., "SIPPING Working Group J. Hautakorpi, Ed. Internet-Draft G. Camarillo Intended status: Informational Ericsson Expires: Dec. 18, 2008 R. Penfield Acme Packet.", 2008.
Hoss, R.J. et al., "Manufacturing Methods and Technology Program for Ruggedized Tactical Fiber Optic Cable", No. ITT-80-03-078. ITT Electrooptical Products DIV Roanoke VA., 1980.
Howard, Courtney "UAV command, control & communications", Military & Aerospace Electronics, militaryaerospace.com, Jul. 11, 2013, 15 pages.
Ippolito, Louis J. "Propagation effects handbook for satellite systems design. A summary of propagation impairments on 10 to 100 GHz satellite links with techniques for system design", 1989, Abstract Only, 1989, 1 page.

(56) **References Cited**

OTHER PUBLICATIONS

Izumiyama, Hidetaka et al., "Multicast over satellite", Applications and the Internet, (SAINT 2002). Proceedings. Symposium on. IEEE, 2002.
Jackson, Mark "Timico CTO Hit by Slow FTTC Broadband Speeds After Copper Corrosion", ISP review, ispreview.co.uk, Mar. 5, 2013.
Jaeger, Raymond et al., "Radiation Performance of Germanium Phosphosilicate Optical Fibers." RADC-TR-81-69: Final Technical Report, Galileo Electro-Optical Corp., May 1981.
James, J. R. et al., "Investigations and Comparisons of New Types of Millimetre-Wave Planar Arrays Using Microstrip and Dielectric Structures", Royal Military College of Science, Apr. 1985, 122 pages.
James, J.R. et al., "Investigations and Comparisons of New Types of Millimetre-Wave Planar Arrays Using Microstrip and Dielectric Structures", Royal Military Coll of Science Shrivenham (England)., 1985.
Jang, Hung-Chin "Applications of Geometric Algorithms to Reduce Interference in Wireless Mesh Network", Journal on Applications of Graph Theory in Wireless Ad hoc Networks and Sensor Networks (JGRAPH-HOC) vol. 2, No. 1, Abstract Only, Mar. 2010, 1 page.
Jawhar, Imad et al., "A hierarchical and topological classification of linear sensor networks", Wireless Telecommunications Symposium, WTS, IEEE, http://faculty.uaeu.ac.ae/Nader_M/papers/WTS2009.pdf, 2009, 8 pages.
Jee, George et al., "Demonstration of the Technical Viability of PLC Systems on Medium- and Low-Voltage Lines in the United States", Broadband is Power: Internet Access Via Power Line Networks, IEEE Communication Magazine, May 2003, 5 pages.
Jeong, et al., "Study of elliptical polarization requirement of KSTAR 84-GHz ECH system", Journal-Korean Physical Society 49, 2006.
Jin, "Quasi-optical mode converter for a coaxial cavity gyrotron", Forschungszentrum, 2007.
Jin, Yu et al., "NEVERMIND, the Problem Is Already Fixed: Proactively Detecting and Troubleshooting Customer DSL Problems", ACM CoNEXT, Philadelphia, USA, Nov.-Dec. 2010, 12 pages.
Jones, Jr., Howard S. "Conformal and Small Antenna Designs", U.S. Army Electronics Research and Development Command, Harry Diamond Laboratories, Apr. 1981, 32 pages.
Kamilaris, et al., "Exploring the Use of DNS as a Search Engine for the Web of Things." Internet of Things (WF-IoT), 2014 IEEE World Forum on. IEEE, 2014.
Kang, "Chapter 6: Array Antennas," IHS Engineering360, globalspec.com, http://www.globalspec.com/reference/75109/203279/chapter-6-array-antennas., Apr. 22, 2015.
Katkovnik, Vladimir et al., "High-resolution signal processing for a switch antenna array FMCW radar with a single channel receiver", Sensor Array and Multichannel Signal Processing Workshop Proceedings, IEEE., 2002.
Khan, "Dual polarized dielectric resonator antennas", Chalmers University of Technology, 2010.
Kikuchi, H. et al., "Hybrid transmission mode of Goubau lines" , J.Inst.Electr.Comm.Engrs., Japan, vol. 43, pp. 39-45., 1960.
Kima, Yi-Gon et al., "Generating and detecting torsional guided waves using magnetostrictive sensors of crossed coils", Chonnam National University, Republic of Korea, Elsevier Ltd, 2010.
Kirkham, H. et al., "Power system applications of fiber optics (Jet Propulsion Lab." JPL Publication 84-28, Electric Energy Systems Division, U.S. DoE, p. 180., 1984.
Kliros, George "Dielectric-EBG covered conical antenna for UWB applications", https://www.researchgate.net/profile/George_Kliros/publication/235322849_Dielectric-EBG_covered_conical_antenna_for_UWB_applications/links/54329e410cf225bddcc7c037.pdf, Disclosing a quasi-planar wideband conical antenna coated with alternating high- and low-permittivity dielectric spherical shells (Section 2; Figure 1 on the 3rd Page)., 2010.
Koshiba, Masanori et al., "Analytical expression of average power-coupling coefficients for estimating intercore crosstalk in multicore fibers", Photonics Journal, IEEE 4.5, 2012, 1987-1995.
Kroon, Barnard et al., "Steady state RF fingerprinting for identity verification: one class classifier versus customized ensemble." Artificial Intelligence and Cognitive Science. Springer Berlin Heidelberg, 198206., Abstract Only, 2010, 3 pages.
Kroyer, Thomas "A Waveguide High Order Mode Reflectometer for the Large Hadron Collider Beam-pipe", Diss. TU Wien., 2003.
Kuhn, Marc et al., "Power Line Enhanced Cooperative Wireless Communications", IEEE Journal on Selected Areas in Communications, vol. 24, No. 7, Jul. 2006, 10 pages.
Kumar, Sailesh "Survey of Current Network Intrusion Detection Techniques", Washington Univ. in St. Louis, Dec. 2007.
Kune, Denis F. et al., "Ghost Talk: Mitigating EMI Signal Injection Attacks against Analog Sensors", 2013 IEEE Symposium on Security and Privacy, 145-159.
Laforte, J.L. et al., "State-of-the-art on power line de-icing", Atmospheric Research 46, 143-158, 1998.
Lappgroupusa, "Selection Of Number Of Cable Cores With Emphasis On Sizing Parameters", Industrial Cable & Connector Technology News, lappconnect.blogspot.com, http://lappconnect.blogspot.com/2014_10_01_archive.html, Oct. 30, 2014.
Lee, Joseph C. "A Compact Q-/K-Band Dual Frequency Feed Horn", No. TR-645, Massachusetts Institute of Technology, Lincoln Laboratory, May 3, 1983, 40 pages.
Leech, Jamie et al., "Experimental investigation of a low-cost, high performance focal-plane horn array." Terahertz Science and Technology, IEEE Transactions on 2.1: 61-70., 2012.
Li, Xi et al., A FCM-Based peer grouping scheme for node failure recovery in wireless P2P file sharing. 2009 IEEE International Conference on Communications. IEEE, 2009., 2009.
Li, Xiang-Yang et al., "Interference-Aware Topology Control for Wireless Sensor Networks", SECON. vol. 5, 2005.
Li, Xiaowei et al., "Integrated plasmonic semi-circular launcher for dielectric-loaded surface plasmonpolariton waveguide", Optics express 19.7: 65416548, 2011.
Li, Xu et al., "Smart community: an internet of things application", Communications Magazine, IEEE 49.11: 68-75, 2011.
Lier, E. et al., "Simple hybrid mode horn feed loaded with a dielectric cone," Electronics Letters 21.13: 563564., 1985.
Lim, Christina et al., "Fiber-wireless networks and subsystem technologies", Lightwave Technology, Journal of 28.4, 390-405, 2010.
Liu, et al., A 25 Gb/s (/km 2) urban wireless network beyond IMTadvanced. IEEE Communications Magazine 49.2 (2011): 122-129.
Lou, Tiancheng "Minimizing Average Interference through Topology Control", Algorithms for Sensor Systems, Springer Berlin Heidelberg, 2012, 115-129.
Lucyszyn, S. et al., "Novel RF MEMS Switches", Microwave Conference, APMC, Asia-Pacific. IEEE, 2007.
Lucyszyn, Stepan et al., "RF MEMS for antenna applications", Antennas and Propagation (EuCAP), 7th European Conference on. IEEE, 2013.
Luo, Qi et al., "Circularly polarized antennas", John Wiley & Sons, Book—description only, 2013, 1 page.
Mahato, Suvranshu Sekhar Studies on an Infrared Sensor Based Wireless Mesh Network. Diss., Abstract Only, 2010, 2 pages.
Maier, Martin et al., "The audacity of fiberwireless (FiWi) networks", AccessNets. Springer Berlin Heidelberg, 16-35., 2009.
Marcatili, E.A. et al., "Hollow Metallic and Dielectric Waveguides for Long Distance Optical Transmission and Lasers", Bell System Technical Journal 43(4), Abstract Only, 2 pages, 1964, 1783-1809.
Matsukawa, et al., A dynamic channel assignment scheme for distributed antenna networks. Vehicular Technology Conference (VTC Spring), 2012 IEEE 75th. IEEE, 2012.
McAllister, M.W. et al., "Resonant hemispherical dielectric antenna," Electronics Letters 20.16: 657659., Abstract Only, 1984, 1 page.
Meng, H. et al., "A transmission line model for high-frequency power line communication channel", Power System Technology,

(56) **References Cited**

OTHER PUBLICATIONS

PowerCon 2002. International Conference on. vol. 2. IEEE, 2002. http://infocom.uniroma1.it/""enzobac/MengChen02.pdf, 2002.
Menon, S.S. et al., "Propagation characteristics of guided modes in a solid dielectric pyramidal horn," Proceedings of the 2012 International Conference on Communication Systems and Network Technologies. IEEE Computer Society, 2012., Abstract Only, 2012, 2 pages.
Miller, David A. "Establishing Optimal Wave Communication Channels Automatically", Journal of Lightwave Technology, vol. 31, No. 24, Dec. 15, 2013, 3987-3994.
Mitchell, John E. "Integrated Wireless Backhaul Over Optical Access Networks", Journal of Lightwave Technology 32.20, 2014, 3373-3382.
Miyagi, M. "Bending losses in hollow and dielectric tube leaky waveguides", Applied Optics 20(7), Abstract Only, 2 pages, 1981, 1221-1229.
Moaveni-Nejad, Kousha et al., "Low-Interference Topology Control for Wireless Ad Hoc Networks", Department of Computer Science, Illinois Institute of Technology, Ad Hoc & Sensor Wireless Networks 1.1-2, 2005, 41-64.
Moisan, M. et al., "Plasma sources based on the propagation of electromagnetic surface waves", Journal of Physics D: Applied Physics 24.7: 1025, 1991.
Mokhtarian, Kianoosh et al., "Caching in Video CDNs: Building Strong Lines of Defense", EuroSys, Amsterdam, Netherlands, 2014.
Morse, T.F. "Research Support for the Laboratory for Lightwave Technology." Brown Univ Providence RI Div of Engineering, 1992., 1992.
Mruk, Joseph Rene "Wideband monolithically integrated frontend subsystems and components", Diss. University of Colorado, 2011.
Mushref, Muhammad "Matrix solution to electromagnetic scattering by a conducting cylinder with an eccentric metamaterial coating", http://www.sciencedirect.com/science/article/pii/S0022247X06011450/pdf?md5=4823be0348a3771b5cec9ffb7f326c2c&pid=1-s2.0-S0022247X06011450-main.pdf, Discloses controlling antenna radiation pattern with coatings, 2007.
Nachiketh, P. et al., "Optimizing public-key encryption for wireless clients", Proceedings of the IEEE International Conference on Communications (ICC 2002). No. 1., 2002.
Nakano, Hisamatsu "http://repo.lib.hosei.ac.jp/bitstream/10114/3835/1/31_Tap(Low-Profile).pdf", Discloses affecting radiation patterns with alternating high- and low-permittivity dielectric shell coatings and formulae for dterimining the results (Figures 2-5 on p. 1865)., 2000.
Narayanan, Arvind "Fingerprinting of RFID Tags and HighTech Stalking." 33 Bits of Entropy, 33bits.org, Oct. 4, 2011.
Nassa, Vinay Kumar "Wireless Communications: Past, Present and Future", Dronacharya Research Journal: 50. vol. III, Issue-II, Jul.-Dec. 2011, 2011.
Nibarger, John P. "An 84 pixel all-silicon corrugated feedhorn for CMB measurements." Journal of Low Temperature Physics 167.3-4 (2012): 522-527., 2012.
Nicholson, Basil J. "Microwave Rotary Joints for X-, C-, and S-band", Battelle Memorial Inst Columbus OH, 1965.
Nikitin, A. Y. et al., "Efficient Coupling of Light to Graphene Plasmons by Compressing Surface Polaritons with Tapered Bulk Materials", NanoLetters; pubs.acs.org/NanoLett, Apr. 28, 2014, 2896-2901.
Nuvotronics, "PolyStrata—Phased Arrays & Antennas", Nuvotronics, nuvotronics.com http://www.nuvotronics.com/antennas.php, Apr. 26, 2015.
Olver, A. D. "Microwave horns and feeds," vol. 39. IET, Book—description only, 1994, 1 page.
Olver, A.D. et al., "Dielectric cone loaded horn antennas," Microwaves, Antennas and Propagation, IEE Proceedings H. vol. 135. No. 3. IET., Abstract Only, 1988, 1 page.
Orfanidis, Sophocles J. "Electromagnetic waves and antennas," Rutgers University., 2002.
Pahlavan, Kaveh et al., "Wireless data communications", Proceedings of the IEEE 82.9: 1398-1430, 1994.
Patel, Shwetak N. et al., "The Design and Evaluation of an End-User-Deployable, Whole House, Contactless Power Consumption Sensor", CHI 2010: Domestic Life, Apr. 2010, 10 pages.
Pato, et al., On building a distributed antenna system with joint signal processing for next generation wireless access networks: The FUTON approach. 7th Conference on Telecommunications, Portugal. 2008.
Paul, Sanjoy et al., "The Cache-and-Forward Network Architecture for Efficient Mobile Content Delivery Services in the Future Internet", Innovations in NGN: Future Network and Services, 2008. K-INGN 2008. First ITU-T Kaleidoscope Academic Conference, 2008.
Perkons, Alfred R. et al., "TM surface-wave power combining by a planar active-lens amplifier", Microwave Theory and Techniques, IEEE Transactions on 46.6: 775783, 1998.
Péter, Zsolt et al., "Assessment of the current intensity for preventing ice accretion on overhead conductors", Power Delivery, IEEE Transactions on 22.1: 565-574., 2007.
Petrovsky, Oleg "The Internet of Things: A Security Overview", w.druva.com, Mar. 31, 2015.
Pham, Tien-Thang et al., "A WDM-PON-compatible system for simultaneous distribution of gigabit baseband and wireless ultrawideband services with flexible bandwidth allocation", Photonics Journal, IEEE 3.1, 2011, 13-19.
Pike, Kevin J. et al., "A spectrometer designed for 6.7 and 14.1 T DNP-enhanced solid-state MAS NMR using quasi-optical microwave transmission", Journal of Magnetic Resonance, 2012, 9 pages.
Piksa, Petr et al., "Elliptic and hyperbolic dielectric lens antennas in mmwaves", Radioengineering 20.1, 2011, 271.
Plagemann, Thomas et al., "Infrastructures for community networks", Content Delivery Networks. Springer Berlin Heidelberg, 367-388, 2008.
Pohl, "A dielectric lens-based antenna concept for high-precision industrial radar measurements at 24GHz," Radar Conference (EuRAD), 2012 9th European, IEEE., 2012.
Ponchak, George E. et al., "A New Model for Broadband Waveguide to Microstrip Transition Design", NASA TM-88905, Dec. 1, 1986, 18 pgs.
Pranonsatit, S. et al., "Sectorised horn antenna array using an RF MEMS rotary switch", Asia-Pacific Microwave Conf., APMC., 2010.
Pranonsatit, Suneat et al., "Single-pole eight-throw RF MEMS rotary switch", Microelectromechanical Systems, Journal of 15.6: 1735-1744, 2006.
Prashant, R.R. et al., "Detecting and Identifying the Location of Multiple Spoofing Adversaries in Wireless Network", International Journal of Computer Science and Mobile Applications, vol. 2 Issue. 5, May 2014, 1-6.
Rahim, S. K. A. et al., "Measurement of wet antenna losses on 26 GHz terrestrial microwave link in Malaysia", Wireless Personal Communications 64.2: 225231, 2012.
Rambabu, K. et al., "Compact single-channel rotary joint using ridged waveguide sections for phase adjustment," IEEE Transactions on Microwave Theory and Techniques (Aug. 2003) 51(8):1982-1986., Abstract Only, Aug. 2003, 2 pages.
Rappaport, Theodore S. et al., "Mobile's Millimeter-Wave Makeover", Spectrum.IEEE.Org, Sep. 2014.
Raychaudhuri, Dipankar et al., "Emerging Wireless Technologies and the Future Mobile Internet", Cambridge University Press, Abstract Only, Mar. 2011, 1 page.
Raychem, "Wire and Cable", Dimensions 2:1., 1996.
Reynet, Olivier et al., "Effect of the magnetic properties of the inclusions on the high-frequency dielectric response of diluted composites." Physical Review B66.9: 094412., 2002.
Rosenberg, Uwe et al., "A novel frequency-selective power combiner/divider in single-layer substrate integrated waveguide technology", IEEE Microwave and Wireless Components Letters, vol. 23, No. 8, Aug. 2013, 406-408.
Rouse, Margaret "Transport Layer Security (TLS)", TechTarget, searchsecurity.techtarget.com, Jul. 2006.

(56) **References Cited**

OTHER PUBLICATIONS

Roze, Mathieu et al., "Suspended core subwavelength fibers: towards practical designs for low-loss terahertz guidance." Optics express 19.10 (2011): 9127-9138., 2011.
Sagar, Nishant "Powerline Communications Systems: Overview and Analysis", Thesis, May 2011, 80 pages.
Sagues, Mikel et al., "Multi-tap complex-coefficient incoherent microwave photonic filters based on optical single-sideband modulation and narrow band optical filtering." Optics express 16.1: 295-303., 2008.
Saied, Yosra Ben et al., "Trust management system design for the internet of things: a contextaware and multiservice approach", Computers & Security 39: 351365, Abstract Only, 2013, 2 pages.
Salema, Carlos et al., "Solid dielectric horn antennas," Artech House Publishers, 1998.
Salema, Carlos et al., "Solid dielectric horn antennas," Artech House Publishers, 1998, Amazon., Book—description only, 1998.
Sarafi, A. et al., "Hybrid wireless-broadband over power lines: A promising broadband solution in rural areas." Communications Magazine, IEEE 47.11 (2009): 140-147., 2009.
Sarafi, Angeliki M. et al., "Hybrid Wireless-Broadband over Power Lines: A Promising Broadband Solution in Rural Areas", IEEE Communications Magazine, Nov. 2009, 8 pages.
Sarnecki, Joseph et al., "Microcell design principles", Communications Magazine, IEEE 31.4: 76-82, 1993.
Saruhan, Ibrahim Halil "Detecting and Preventing Rogue Devices on the Network", SANS Institute InfoSec Reading Room, sans.org, Aug. 8, 2007, 1 page.
Scarfone, Karen et al., "Technical Guide to Information Security Testing and Assessment", National Institute of Standards and Technology, csrc.nist.gov, Special Publication, Sep. 2008, 800-115.
Shafai, Lotfollah "Dielectric Loaded Antennas", John Wiley & Sons, Inc., http://www.researchgate.net/publication/227998803_Dielectric_Loaded_Antennas, Apr. 15, 2005.
Shafi, Mansoor et al., "Advances in Propagation Modeling for Wireless Systems", EURASIP Journal on Wireless Communications and Networking. Hindawi Publishing Corp, 2009, p. 5.
Shankland, Steven "Lowly DSL poised for gigabit speed boost", CINet, cnet.com, Oct. 21, 2014.
Shimabukuko, F.I. et al., "Attenuation measurement of very low-loss dielectric waveguides by the cavity resonator method in the millimeter/submillimeter wavelength range." No. TR-0086A (2925-06)-1. Aerospace Corp El Segundo CA Electronics Research Lab, 1989., 1989.
Shindo, Shuichi et al., "Attenuation measurement of cylindrical dielectric-rod waveguide." Electronics Letters 12.5, 117-118., 1976.
Shumate, Paul W. et al., "Evolution of fiber in the residential loop plant." IEEE Communications Magazine 29.3: 68-74., 1991.
Sievenpiper, D.F. et al., "Two-dimensional beam steering using an electrically tunable impedance surface," in Antennas and Propagation, IEEE Transactions on, vol. 51, No. 10, pp. 2713-2722., Oct. 2003.
Silver, Ralph U. "Local Loop Overview", National Communications System (NCS), BellSouth Network Training, newnetworks.com, Aug. 2016.
Sommerfeld, A. "On the propagation of electrodynamic waves along a wire", Annals of Physics And Chemistry New Edition, vol. 67, No. 2, 1899, 72 pages.
Spencer, D G. "Novel Millimeter ACC Antenna Feed", IEEE Colloquium on Antennas for Automotives, Mar. 10, 2000.
Strahler, Olivier "Network Based VPNs", SANS Institute InfoSec Reading Room, sans.org., Aug. 2002.
Strieby, M.E. et al., "Television transmission over wire lines." American Institute of Electrical Engineers, Transactions of the 60.12: 1090-1096., Abstract Only, 1941, 2 pages.
Szabó, Csaba A. "European Broadband Initiatives with Public Participation", Broadband Services: 255, 2005.
Szczys, Mike "Cameras Perch on Power Lines, Steal Electricity", http://hackaday.com/2010/06/28/cameras-perch-on-power-lines-steal-electricity/, Discloses cameras that clamp on to power lines and use induction as a power source., 2010.
Taboada, John M. et al., "Thermo-optically tuned cascaded polymer waveguide taps." Applied physics letters 75.2: 163-165., 1999.
Talbot, David "Adapting Old-Style Phone Wires for Superfast Internet", Adapting Old-Style Phone Wires for Superfast Internet, Jul. 30, 2013.
Tantawi, Sami G. et al., "High-power multimode X-band rf pulse compression system for future linear colliders", Physical Review Special Topics-Accelerators and Beams, 1098-4402/05/8(4)/042002, 2005, 19 pages.
Templeton, Steven J. et al., "Detecting Spoofed Packets", DARPA Information Survivability Conference and Exposition, vol. 1, IEEE, 2003.
Theoleyr, Fabrice "Internet of Things and M2M Communications", books.google.com, ISBN13: 9788792982483, Book—description only, Apr. 17, 2013, 1 page.
Thornton, John et al., "Modern lens antennas for communications engineering", vol. 39, 2013.
Valladares, Cindy "20 Critical Security Controls: Control 7—Wireless Device Control", Tripwire—The State of Security, tripwire.com, Mar. 21, 2013.
Vogelgesang, Ralf et al., "Plasmonic nanostructures in aperture-less scanning near-field optical microscopy (aSNOM)", physica status solidi (b) 245.10: 22552260, 2008.
Volat, C. et al., "De-icing/anti-icing techniques for power lines: current methods and future direction", Proceedings of the 11th International Workshop on Atmospheric Icing of Structures, Montreal, Canada., 2005.
Wagter, Herman "Fiber-to-the-X: the economics of last-mile fiber", ARS Technica, arstechnica.com, Mar. 31, 2010.
Wake, David et al., "Radio over fiber link design for next generation wireless systems", Lightwave Technology, Journal of 28.16: 2456-2464., 2010.
Wang, Jing et al., "The influence of optical fiber bundle parameters on the transmission of laser speckle patterns", Optics express 22.8, 2014, 8908-8918.
Wang, Wei "Optimization Design of an Inductive Energy Harvesting Device for Wireless Power Supply System Overhead High-Voltage Power Lines", https://pdfs.semanticscholar.org/3941/601af7a21d55e8b57ab0c50d5f1d9f9f6868.pdf, Discloses an induction based energy harvesting device that takes energy from overhead powerlines (Figure 4)., 2016.
Werner, Louis B. et al., "Operation Greenhouse", Scientific Director's Report of Atomic Weapon Tests at Eniwetok, Annex 6.7 Contimation-Decontamination Studies Naval Radiological Defense Lab, 1951.
Wilkins, George A. "Fiber Optic Telemetry in Ocean Cable Systems", Chapter in new edition of handbook Of Oceanographic Winch, Wire And Cable Technology, Alan H. Driscoll, Ed., (to be published by University of Rhode Island)., 1986.
Wolfe, Victor et al., "Feasibility Study of Utilizing 4G LTE Signals in Combination With Unmanned Aerial Vehicles for the Purpose of Search and Rescue of Avalanche Victims (Increment 1)", University of Colorado at Boulder, Research Report, 2014, 26 pages.
Wolff, Christian "Phased Array Antenna" Radar Tutorial, web.archive.org, radartutorial.eu, Oct. 21, 2014.
Wu, Xidong et al., "Design and characterization of singleand multiplebeam mmwave circularly polarized substrate lens antennas for wireless communications", Microwave Theory and Techniques, IEEE Transactions on 49.3, 2001, 431-441.
Xi, Liu Xiao "Security services in SoftLayer", Sep. 21, 2015.
Xia, Cen et al., "Supermodes for optical transmission", Optics express 19.17, 2011, 16653-16664.
Yang, "Power Line Sensor Networks for Enhancing Power Line Reliability and Utilization", Georgia Institute of Technology, https://smartech.gatech.edu/bitstream/handle/1853/41087/Yang_Yi_201108_phd.pdf, Apr. 26, 2011, 264 pages.
Yang, et al., "Power line sensornet—a new concept for power grid monitoring", IEEE Power Engineering Society General Meeting, Abstract Only, 2006, pp. 8.
Yeh, C. et al., "Ceramic Waveguides." Interplanetary Network Progress Report141.26: 1., 2000.

(56) **References Cited**

OTHER PUBLICATIONS

Yeh, C. et al., "Thin-Ribbon Tapered Coupler for Dielectric Waveguides", 5/151994, 42-48.
Yilmaz, et al., Self-optimization of coverage and capacity in LTE using adaptive antenna systems. Diss. Aalto University, 2010.
Yu, Shui et al., "Predicted packet padding for anonymous web browsing against traffic analysis attacks", Information Forensics and Security, IEEE Transactions on 7.4, http://nsp.org.au/syu/papers/tifs12.pdf, 2012, 1381-1393.
Zelby, Leon W. "Propagation Modes on A Dielectric Coated Wire", J. The Franklin Institute, vol. 274(2), pp. 85-97, 1962.
Zhao, et al., "Energy harvesting for a wireless-monitoring system of overhead high-voltage power lines", IET Generation, Transmission & Distribution 7, IEEE Xplore Abstract, 2013, 2 pages.
Zheng, Zhu et al., "Efficient coupling of propagating broadband terahertz radial beams to metal wires", Optics express 21.9: 1064210650, 2013.
Zucker, "Surface-wave antennas", Antenna engineering handbook 4, 2007.

* cited by examiner

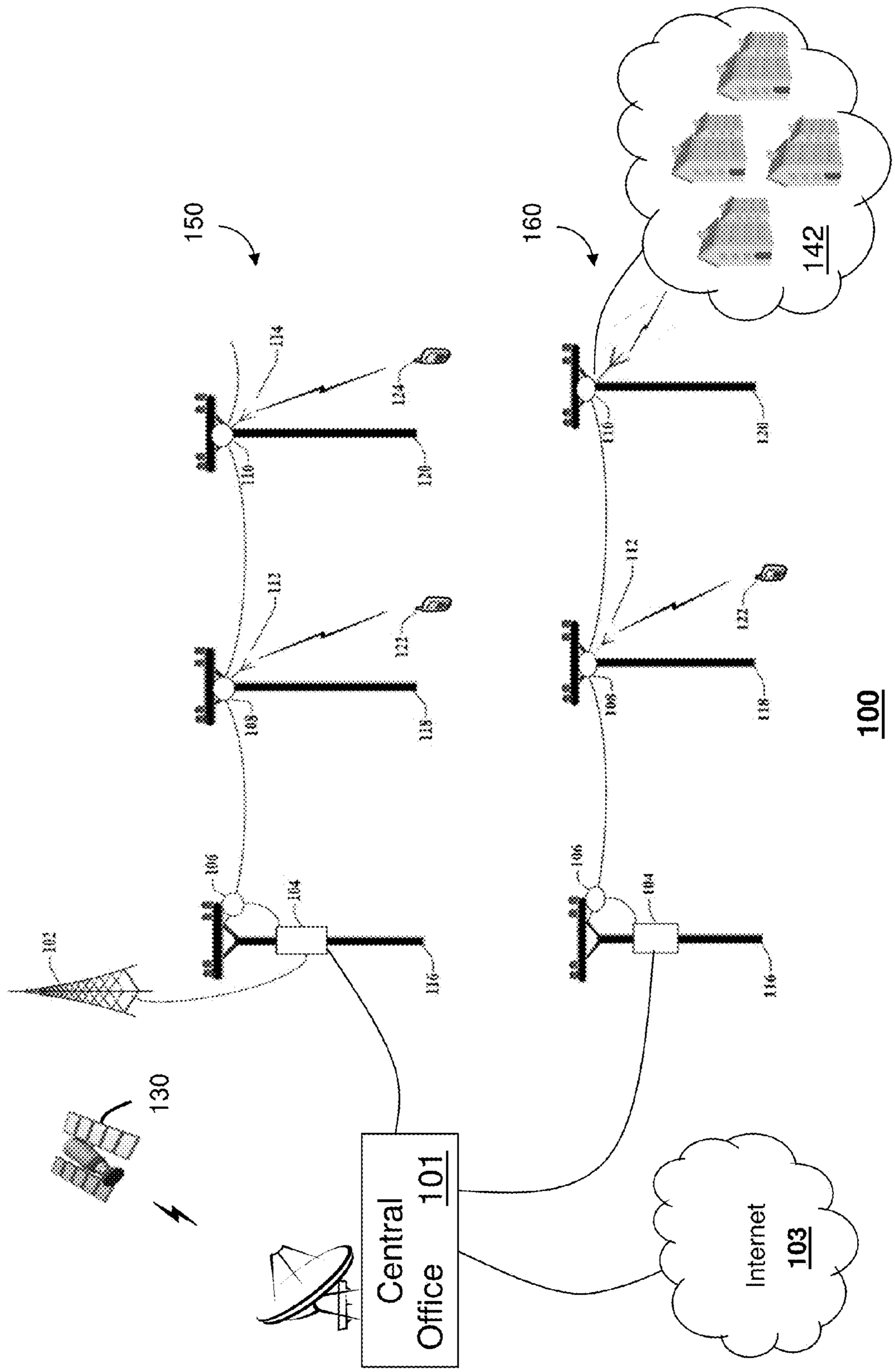
150
160
142
114
124
110
120
112
122
108
118
106
104
102
116
130
Central Office 101
Internet 103

100

FIG. 1

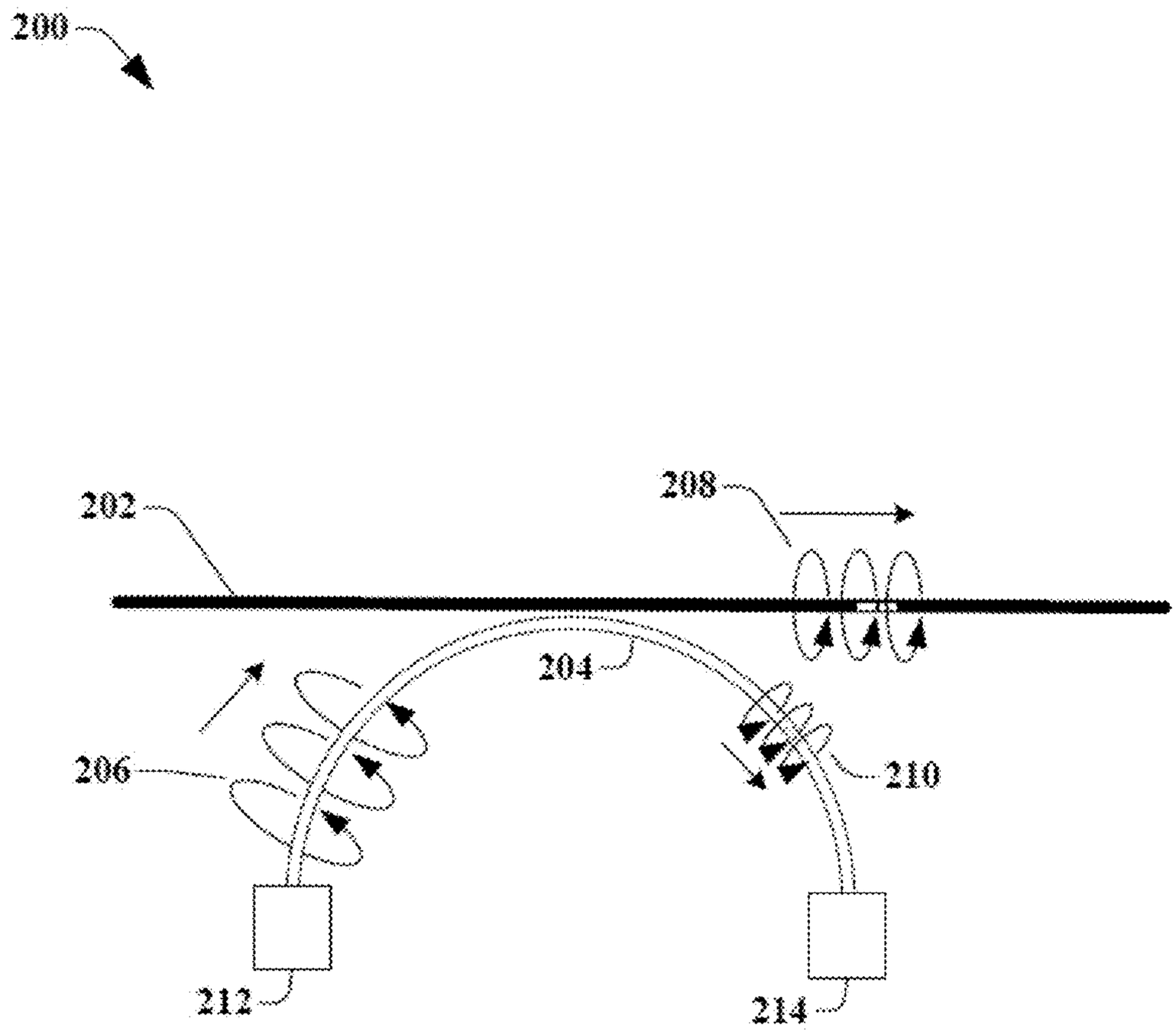

FIG. 2

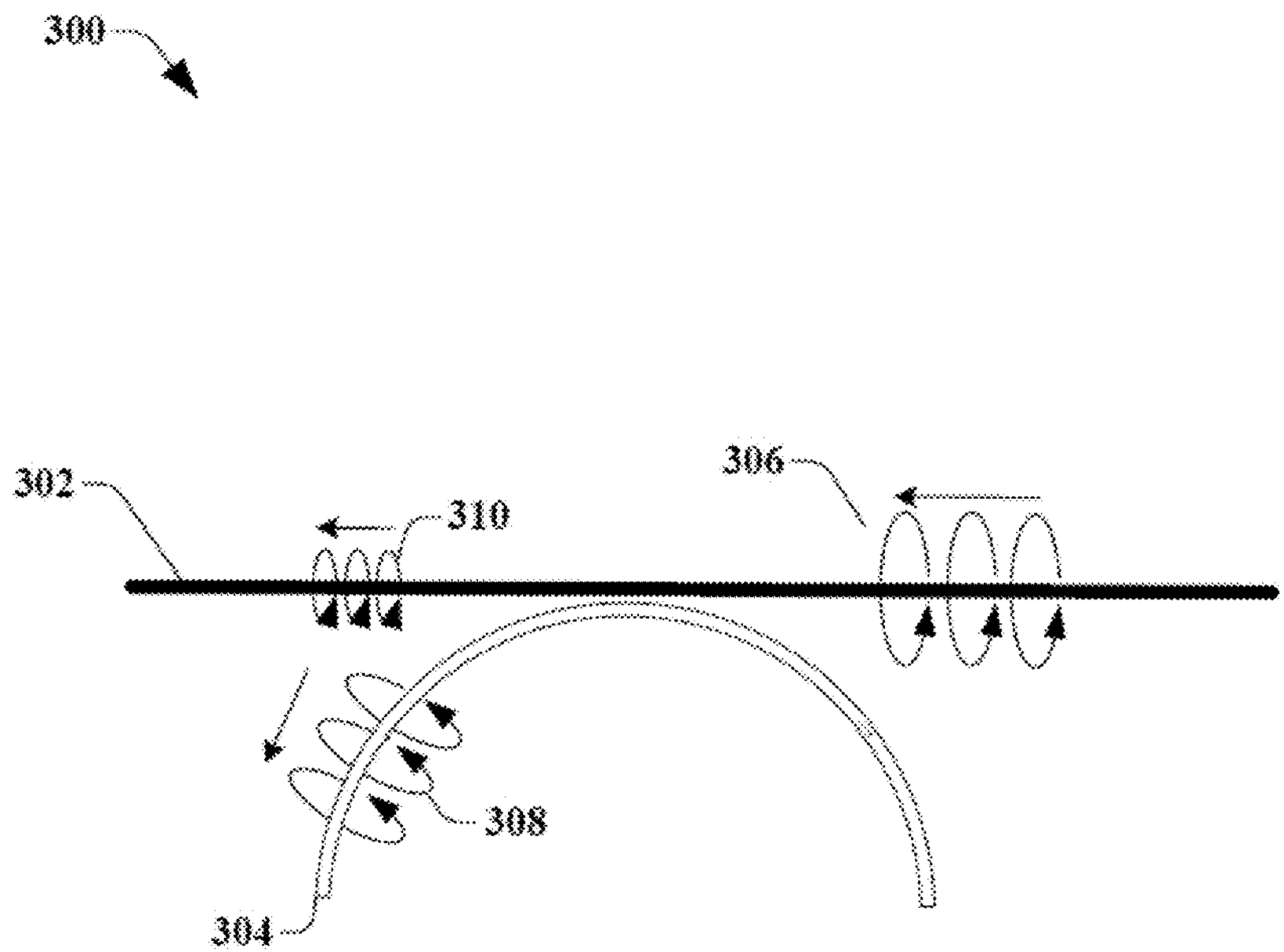

FIG. 3

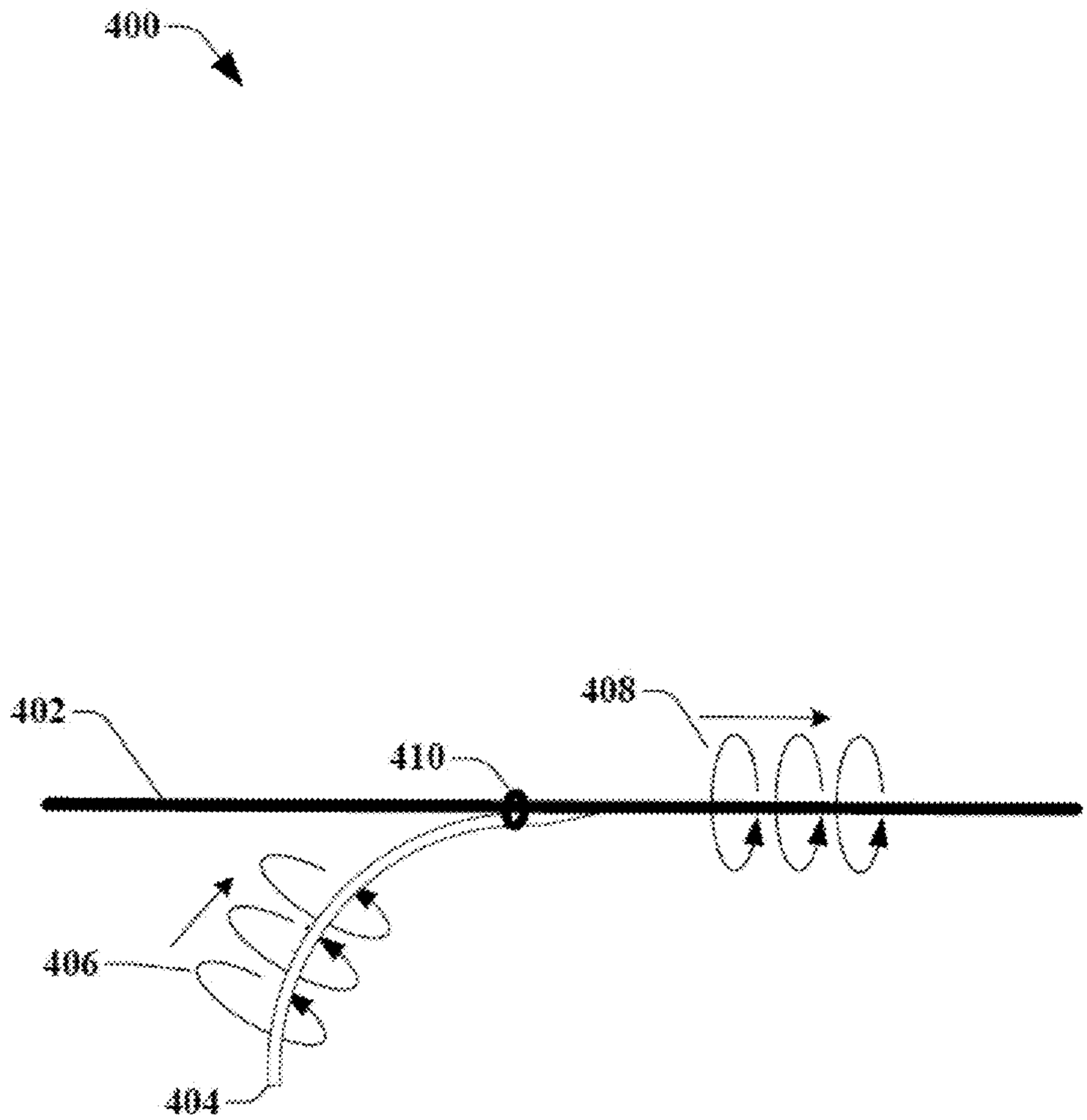

FIG. 4

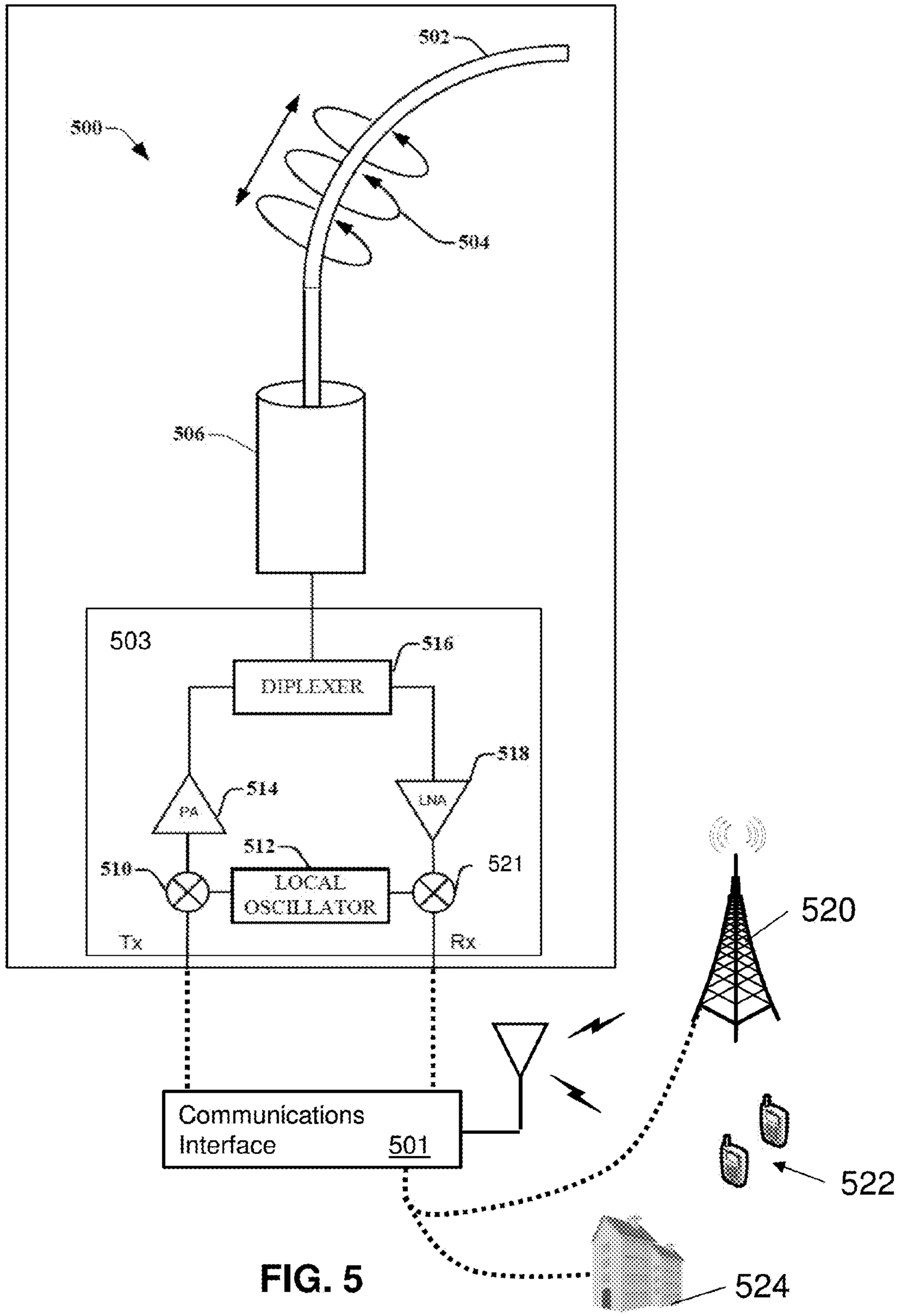
502
500
504
506
503
516
DIPLEXER
518
514
PA
LNA
512
510
LOCAL
OSCILLATOR
521
Tx
Rx
520
Communications
Interface
501
522
524

FIG. 5

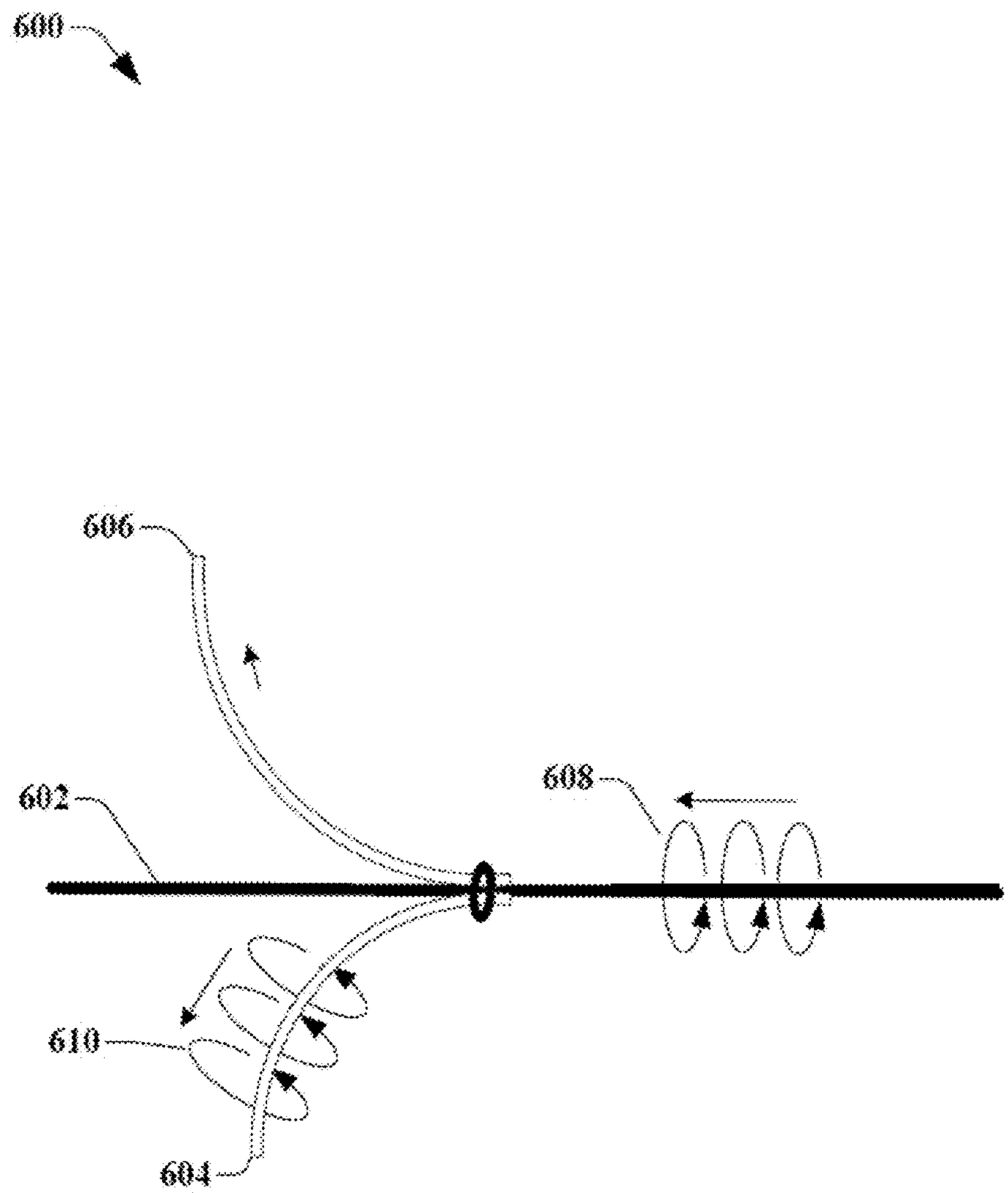

FIG. 6

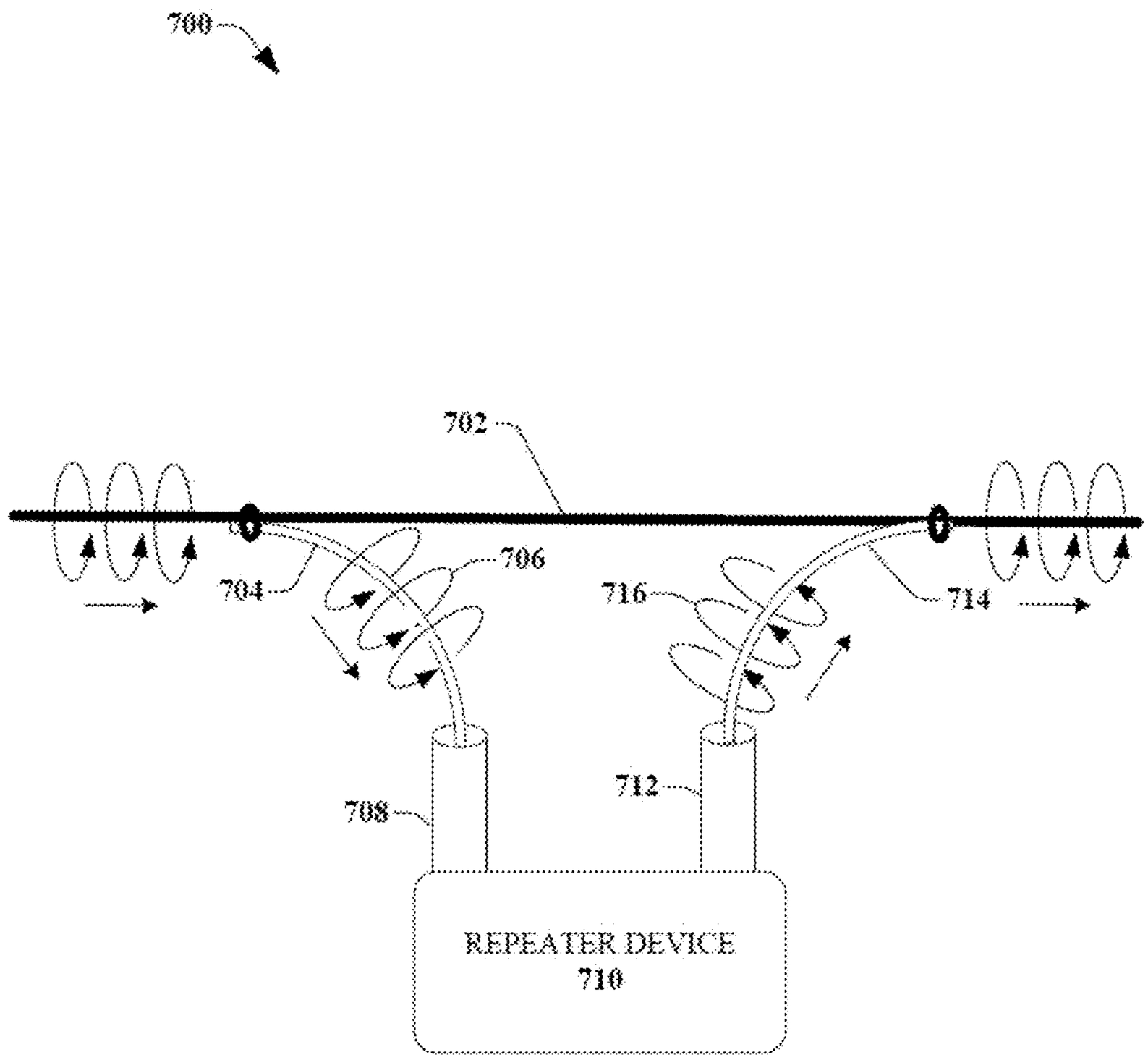

FIG. 7

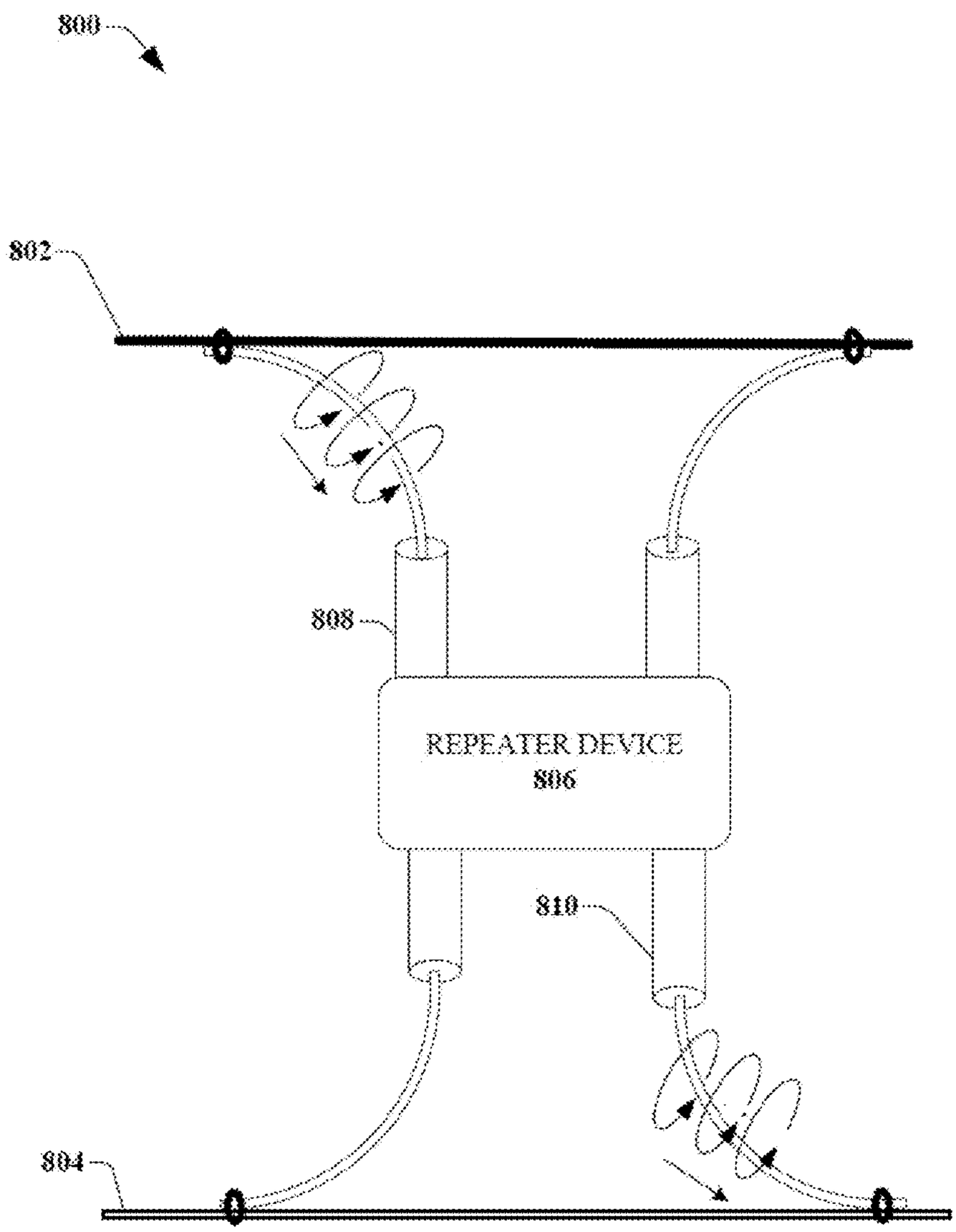

FIG. 8

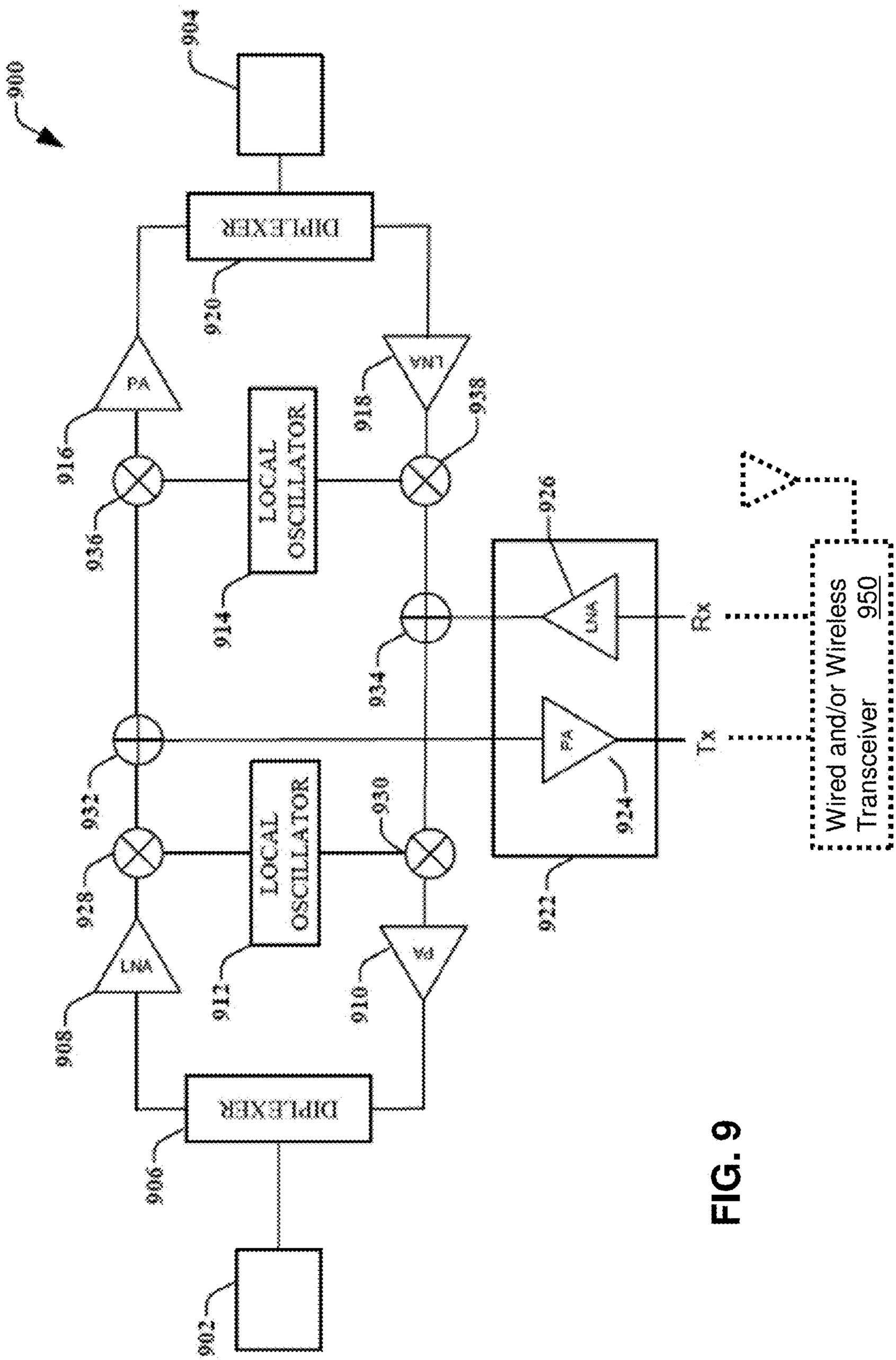
900
904
DIPLEXER
920
PA
916
LNA
918
LOCAL OSCILLATOR
914
936
938
926
LNA
934
Rx
Tx
PA
924
922
932
930
LOCAL OSCILLATOR
912
928
LNA
908
PA
910
DIPLEXER
906
902
Wired and/or Wireless Transceiver 950

FIG. 9

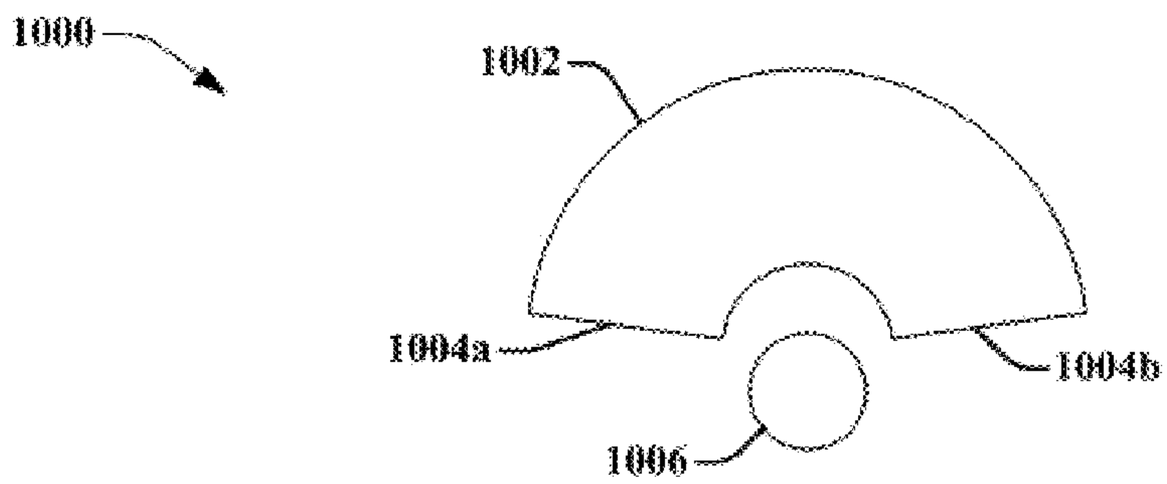

FIG. 10A

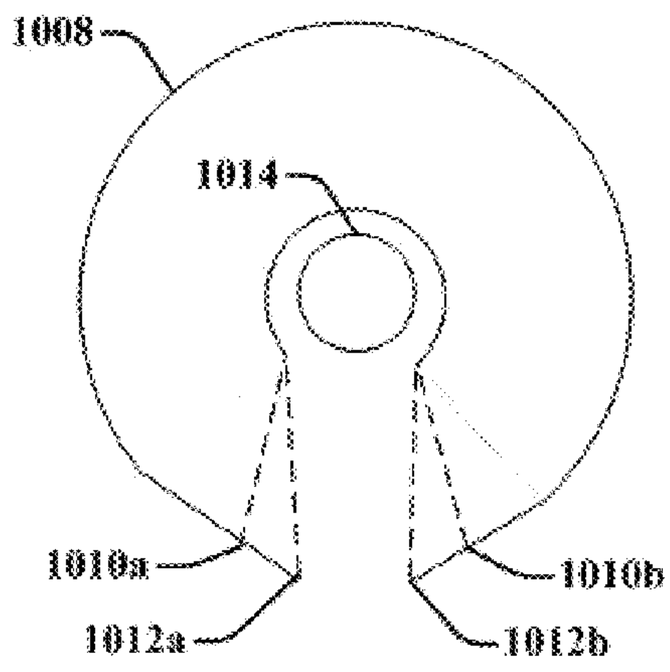

FIG. 10B

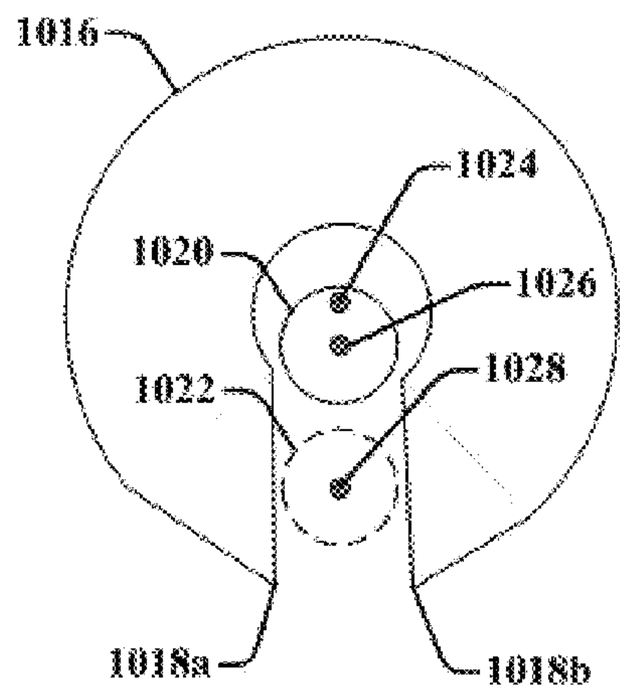

FIG. 10C

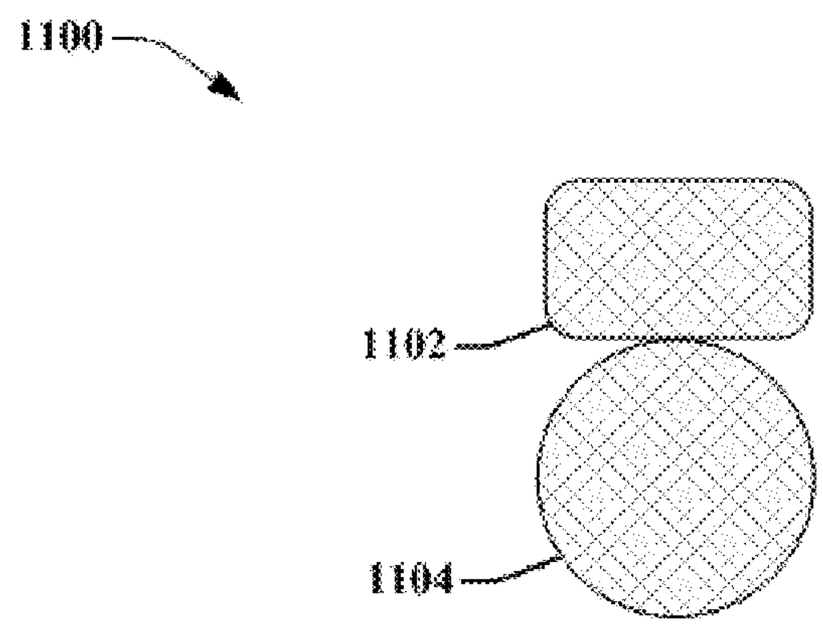

FIG. 11

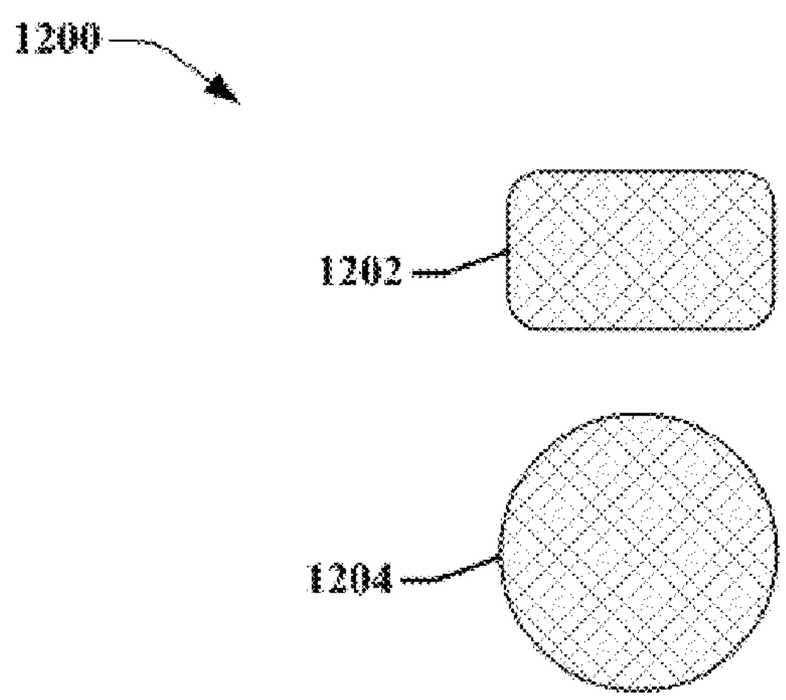

FIG. 12

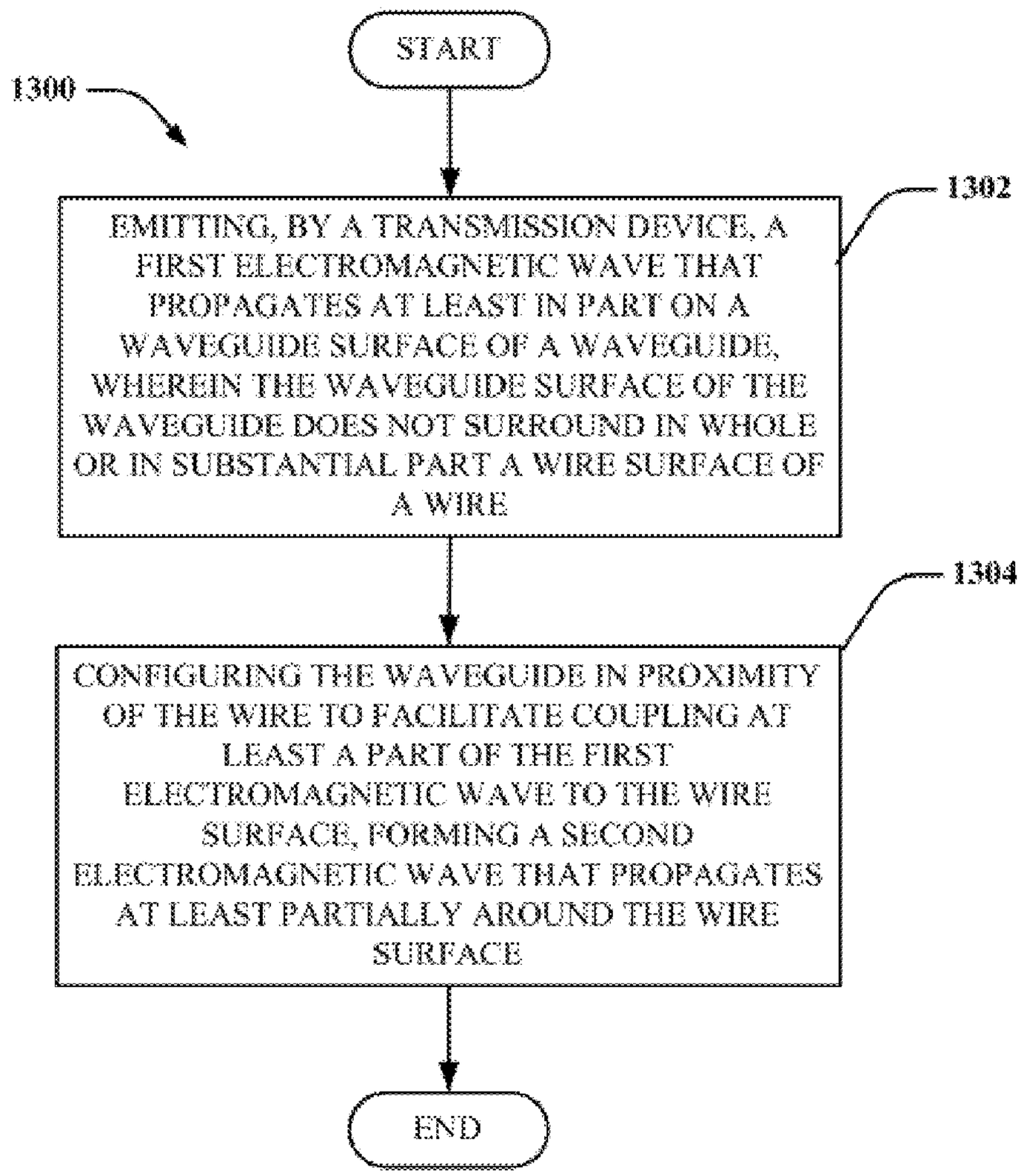
START
1300
1302
EMITTING, BY A TRANSMISSION DEVICE, A FIRST ELECTROMAGNETIC WAVE THAT PROPAGATES AT LEAST IN PART ON A WAVEGUIDE SURFACE OF A WAVEGUIDE, WHEREIN THE WAVEGUIDE SURFACE OF THE WAVEGUIDE DOES NOT SURROUND IN WHOLE OR IN SUBSTANTIAL PART A WIRE SURFACE OF A WIRE
1304
CONFIGURING THE WAVEGUIDE IN PROXIMITY OF THE WIRE TO FACILITATE COUPLING AT LEAST A PART OF THE FIRST ELECTROMAGNETIC WAVE TO THE WIRE SURFACE, FORMING A SECOND ELECTROMAGNETIC WAVE THAT PROPAGATES AT LEAST PARTIALLY AROUND THE WIRE SURFACE
END

FIG. 13

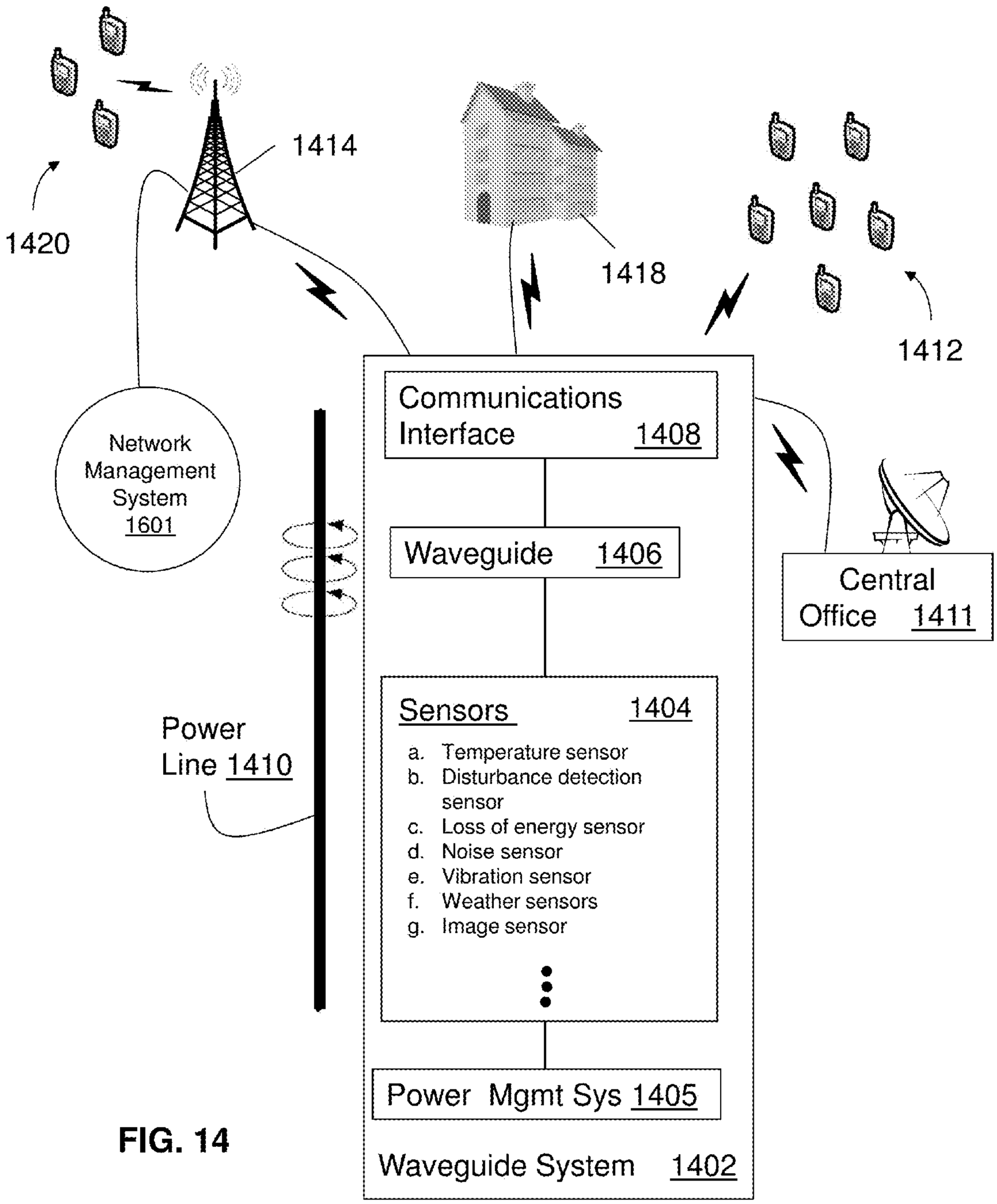
1414
1420
1418
1412
Network Management System 1601
Communications Interface 1408
Waveguide 1406
Central Office 1411
Power Line 1410
Sensors 1404
a. Temperature sensor
b. Disturbance detection sensor
c. Loss of energy sensor
d. Noise sensor
e. Vibration sensor
f. Weather sensors
g. Image sensor
Power Mgmt Sys 1405
Waveguide System 1402

FIG. 14

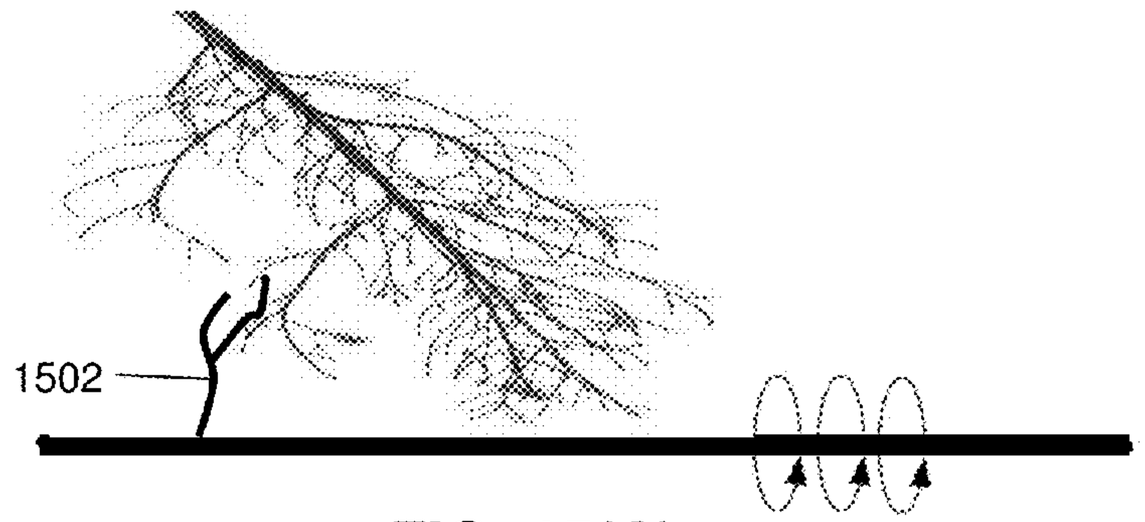

FIG. 15(A)

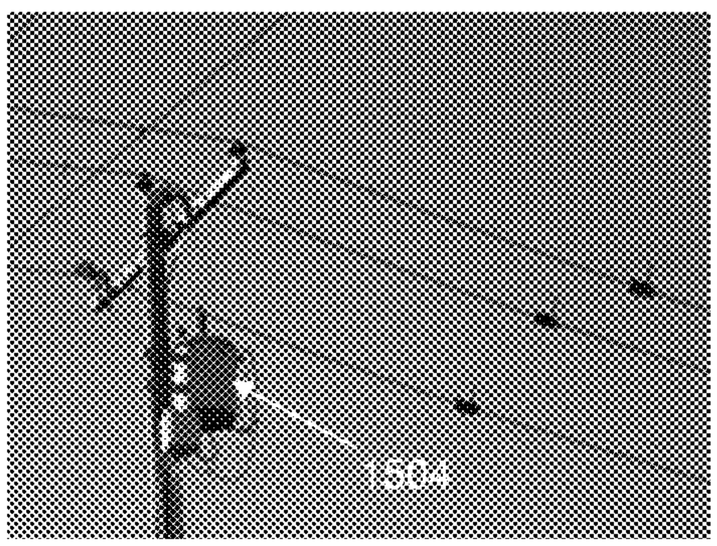

FIG. 15(B)

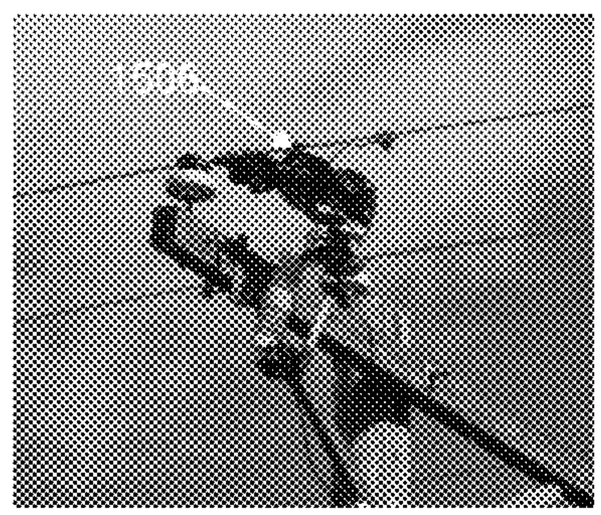

FIG. 15(C)

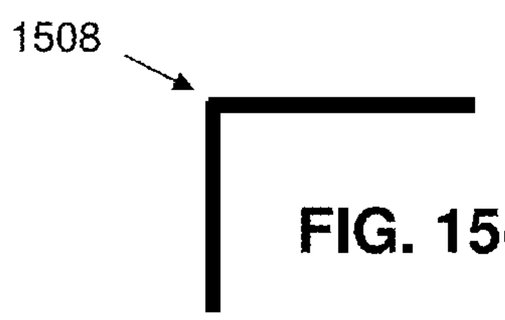

FIG. 15(D)

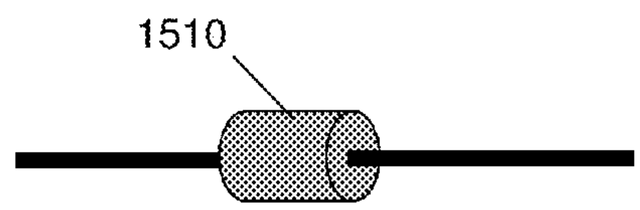

FIG. 15(E)

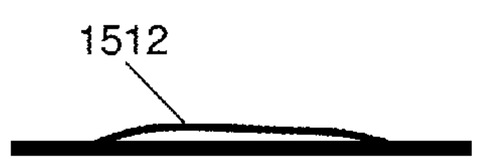

FIG. 15(F)

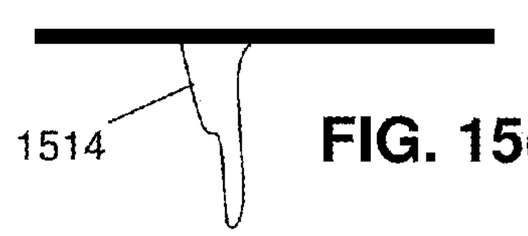

FIG. 15(G)

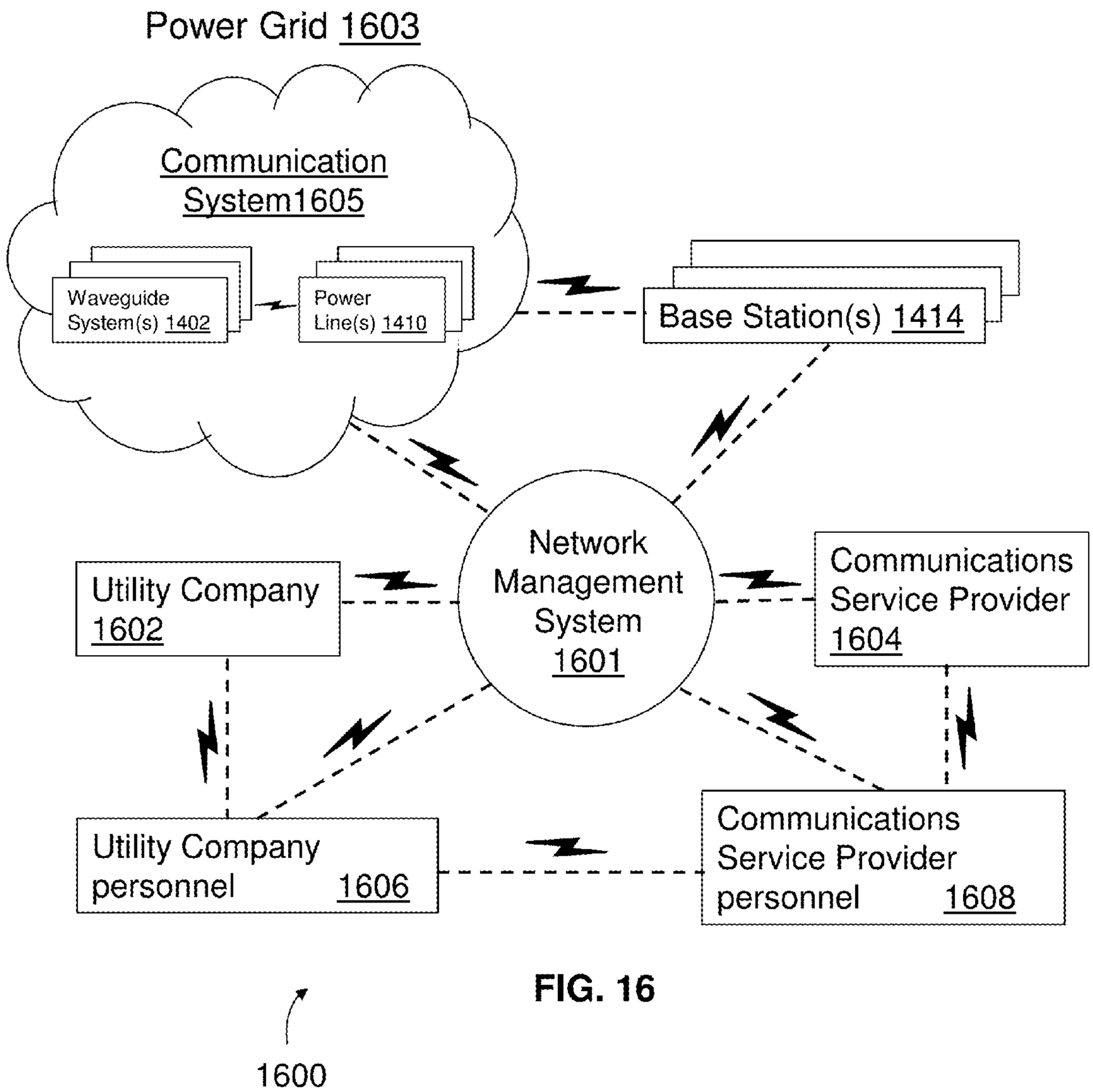
Power Grid 1603
Communication System1605
Waveguide System(s) 1402
Power Line(s) 1410
Base Station(s) 1414
Network Management System 1601
Utility Company 1602
Communications Service Provider 1604
Utility Company personnel 1606
Communications Service Provider personnel 1608
1600

FIG. 16

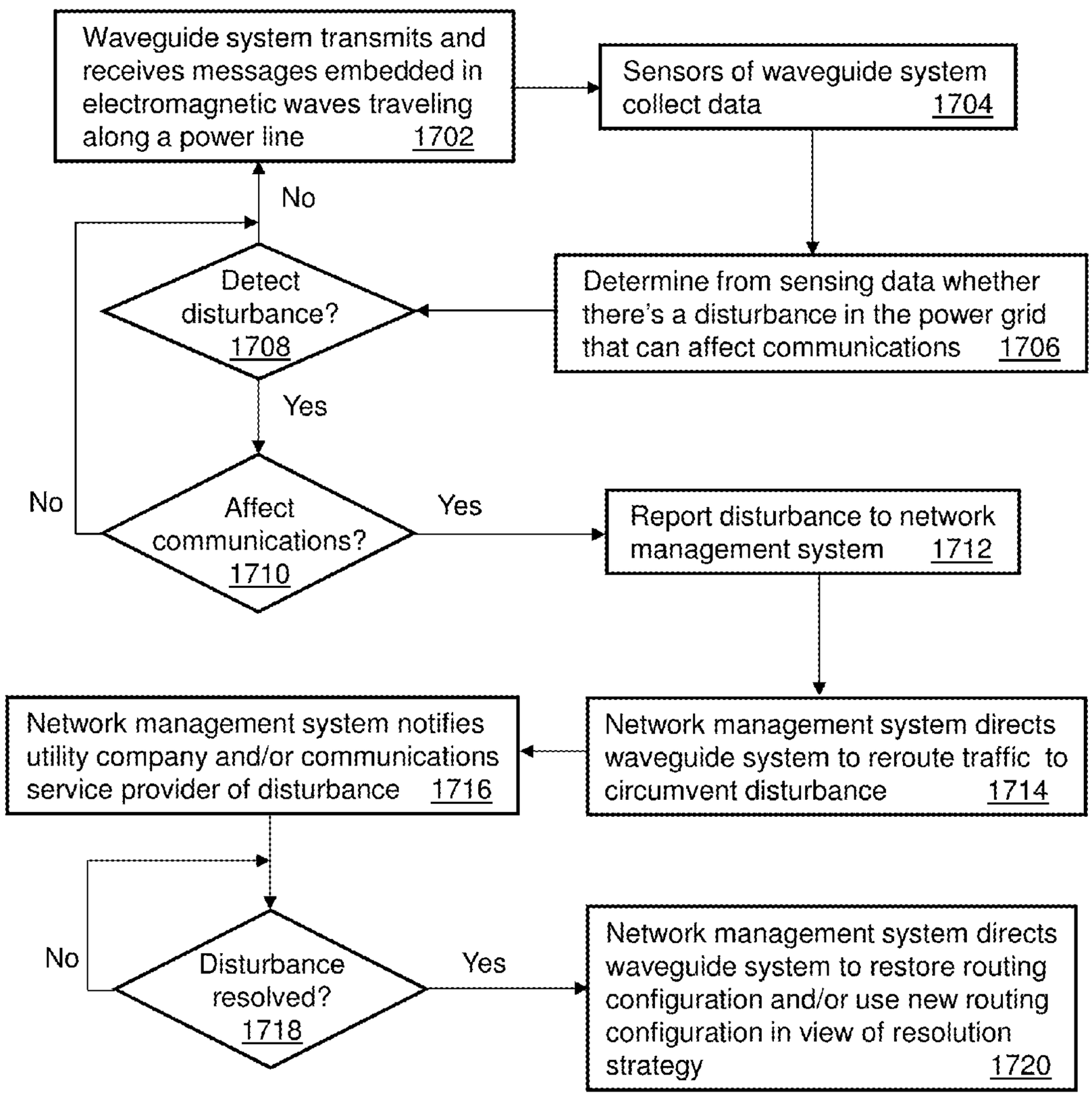
Waveguide system transmits and receives messages embedded in electromagnetic waves traveling along a power line 1702
Sensors of waveguide system collect data 1704
Determine from sensing data whether there's a disturbance in the power grid that can affect communications 1706
Detect disturbance? 1708
No
Yes
Affect communications? 1710
No
Yes
Report disturbance to network management system 1712
Network management system directs waveguide system to reroute traffic to circumvent disturbance 1714
Network management system notifies utility company and/or communications service provider of disturbance 1716
Disturbance resolved? 1718
No
Yes
Network management system directs waveguide system to restore routing configuration and/or use new routing configuration in view of resolution strategy 1720

1700

FIG. 17A

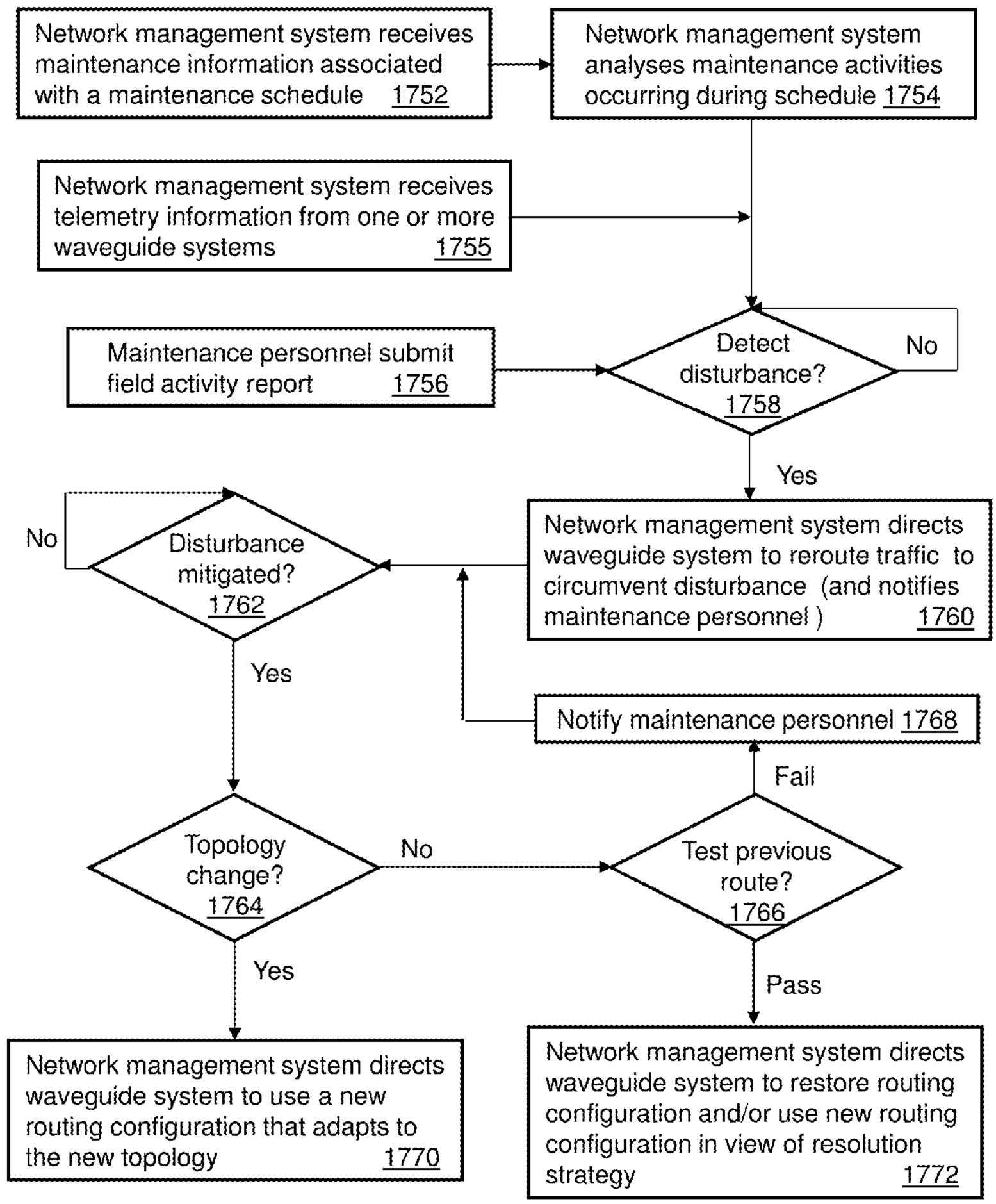
Network management system receives maintenance information associated with a maintenance schedule 1752
Network management system analyses maintenance activities occurring during schedule 1754
Network management system receives telemetry information from one or more waveguide systems 1755
Maintenance personnel submit field activity report 1756
Detect disturbance? 1758
No
Yes
Network management system directs waveguide system to reroute traffic to circumvent disturbance (and notifies maintenance personnel) 1760
No
Disturbance mitigated? 1762
Yes
Notify maintenance personnel 1768
Fail
Topology change? 1764
No
Test previous route? 1766
Yes
Pass
Network management system directs waveguide system to use a new routing configuration that adapts to the new topology 1770
Network management system directs waveguide system to restore routing configuration and/or use new routing configuration in view of resolution strategy 1772

1750

FIG. 17B

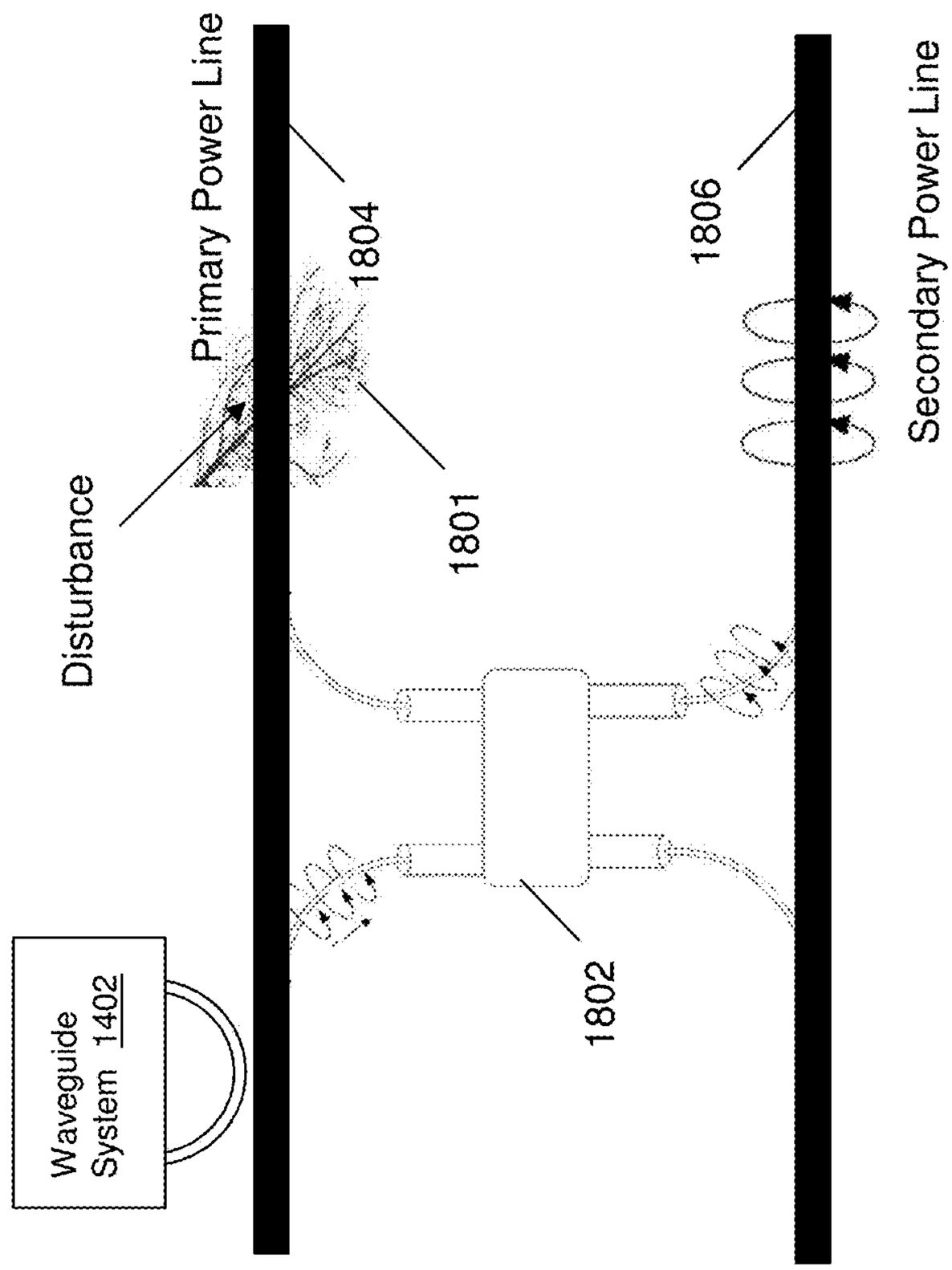
Primary Power Line
Secondary Power Line
Disturbance
1804
1806
1801
1802
Waveguide System 1402

FIG. 18A

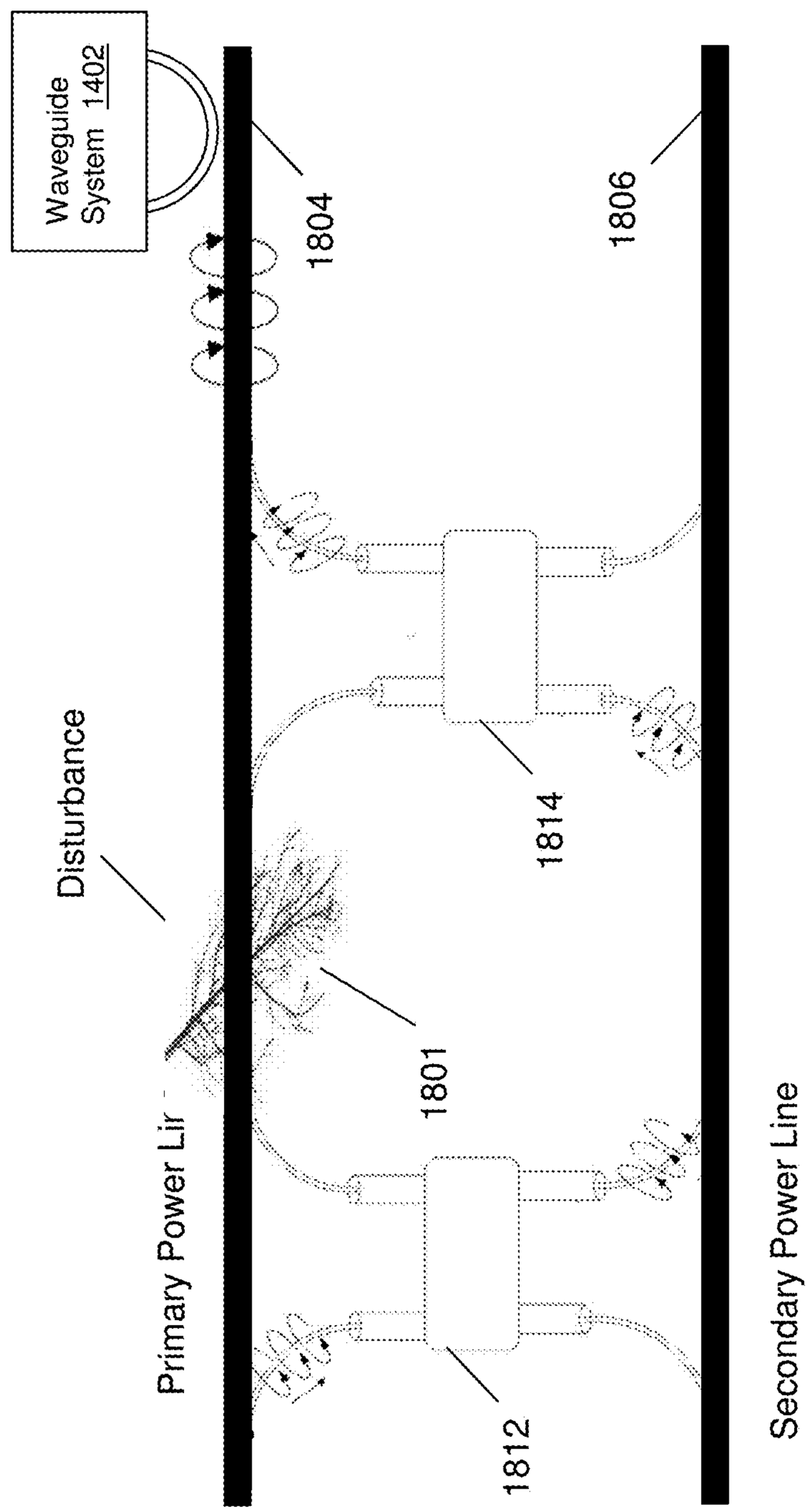
Waveguide System 1402
1804
1806
Disturbance
1814
1801
Primary Power Lir
1812
Secondary Power Line

FIG. 18B

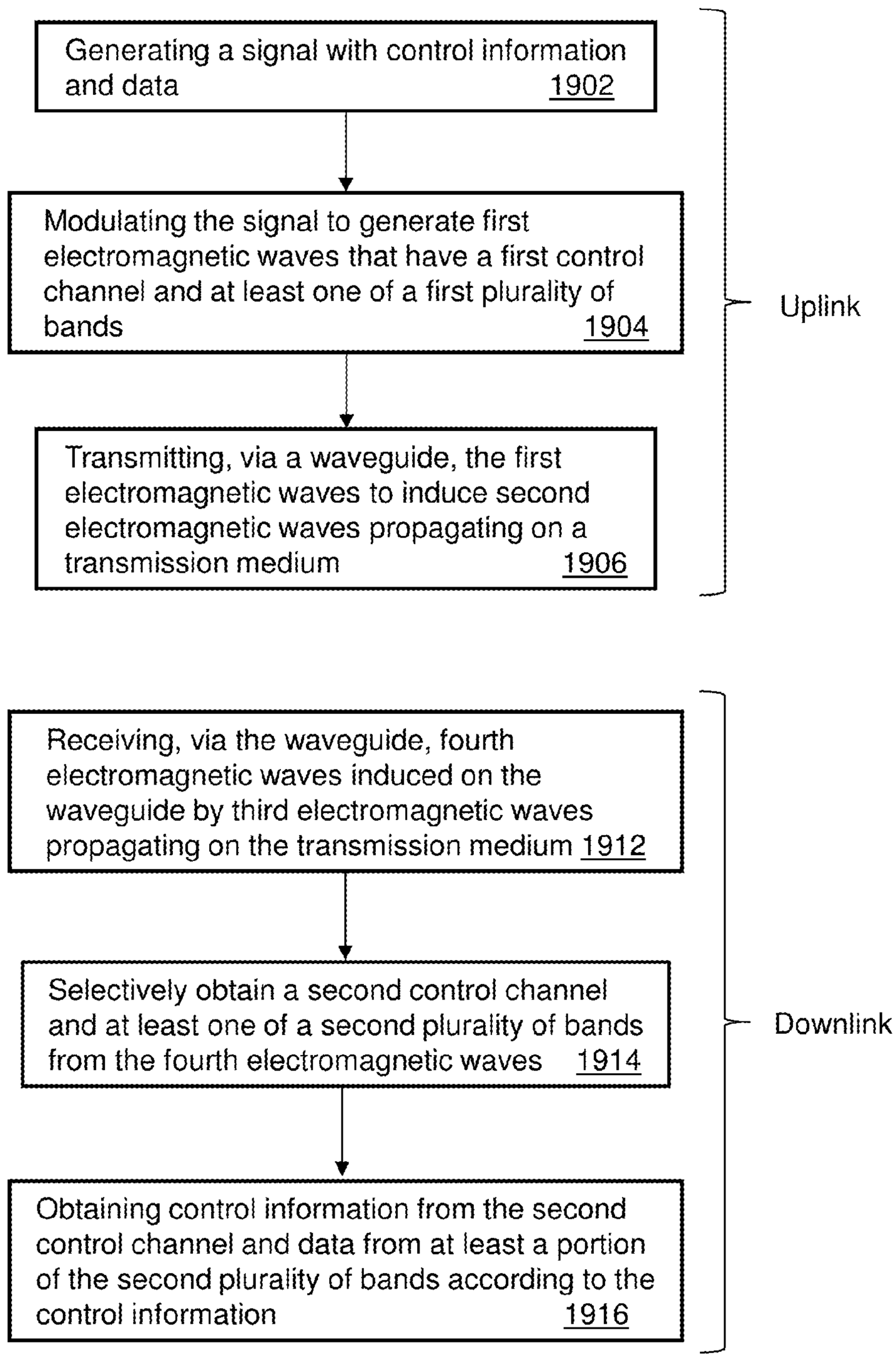
Generating a signal with control information and data 1902
Modulating the signal to generate first electromagnetic waves that have a first control channel and at least one of a first plurality of bands 1904
Transmitting, via a waveguide, the first electromagnetic waves to induce second electromagnetic waves propagating on a transmission medium 1906
Uplink
Receiving, via the waveguide, fourth electromagnetic waves induced on the waveguide by third electromagnetic waves propagating on the transmission medium 1912
Selectively obtain a second control channel and at least one of a second plurality of bands from the fourth electromagnetic waves 1914
Obtaining control information from the second control channel and data from at least a portion of the second plurality of bands according to the control information 1916
Downlink

1900

FIG. 19

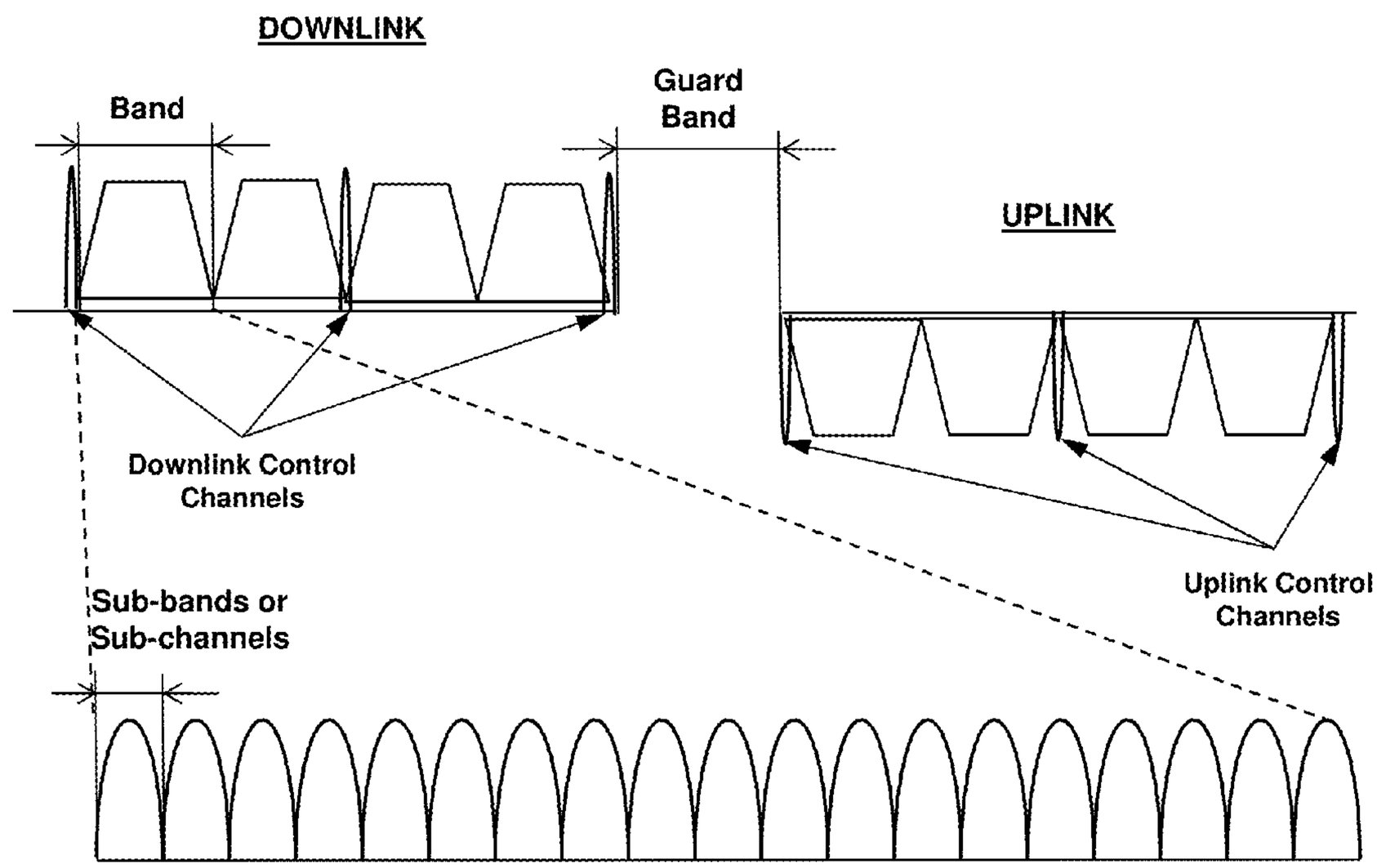
DOWNLINK
Band
Guard Band
UPLINK
Downlink Control Channels
Uplink Control Channels
Sub-bands or Sub-channels

FIG. 20

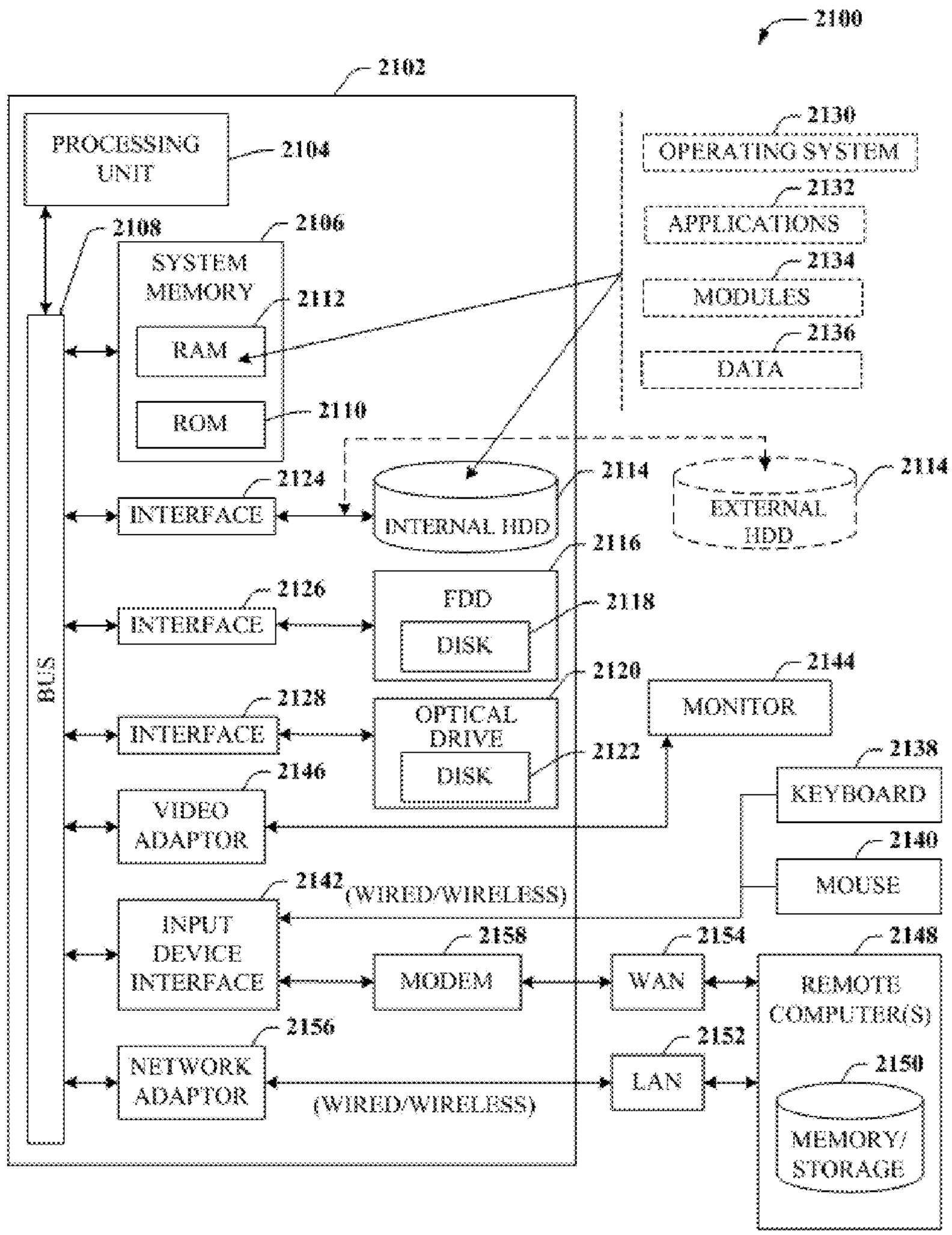
2100
2102
PROCESSING UNIT
2104
2108
2106
SYSTEM MEMORY
2112
RAM
ROM
2110
2130
OPERATING SYSTEM
2132
APPLICATIONS
2134
MODULES
2136
DATA
2124
INTERFACE
INTERNAL HDD
2114
EXTERNAL HDD
2114
2126
INTERFACE
FDD
DISK
2116
2118
BUS
2128
INTERFACE
OPTICAL DRIVE
DISK
2120
2122
2144
MONITOR
2146
VIDEO ADAPTOR
2138
KEYBOARD
2140
MOUSE
2142
(WIRED/WIRELESS)
INPUT DEVICE INTERFACE
2158
MODEM
2154
WAN
2148
REMOTE COMPUTER(S)
2156
NETWORK ADAPTOR
(WIRED/WIRELESS)
2152
LAN
2150
MEMORY/ STORAGE

FIG. 21

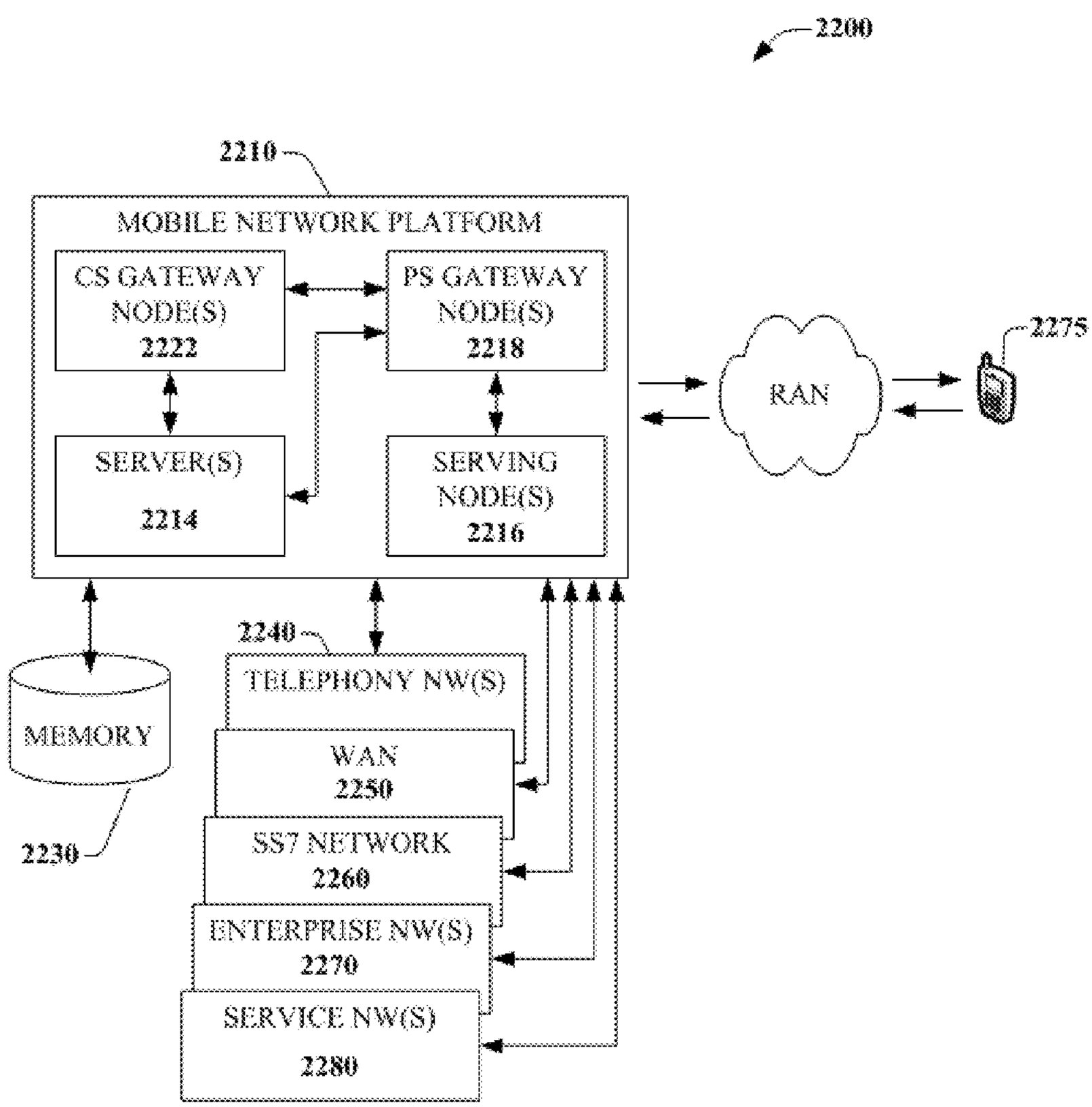
2200
2210
MOBILE NETWORK PLATFORM
CS GATEWAY NODE(S) 2222
PS GATEWAY NODE(S) 2218
SERVER(S) 2214
SERVING NODE(S) 2216
RAN
2275
2240
TELEPHONY NW(S)
MEMORY
WAN 2250
SS7 NETWORK 2260
ENTERPRISE NW(S) 2270
SERVICE NW(S) 2280
2230

FIG. 22

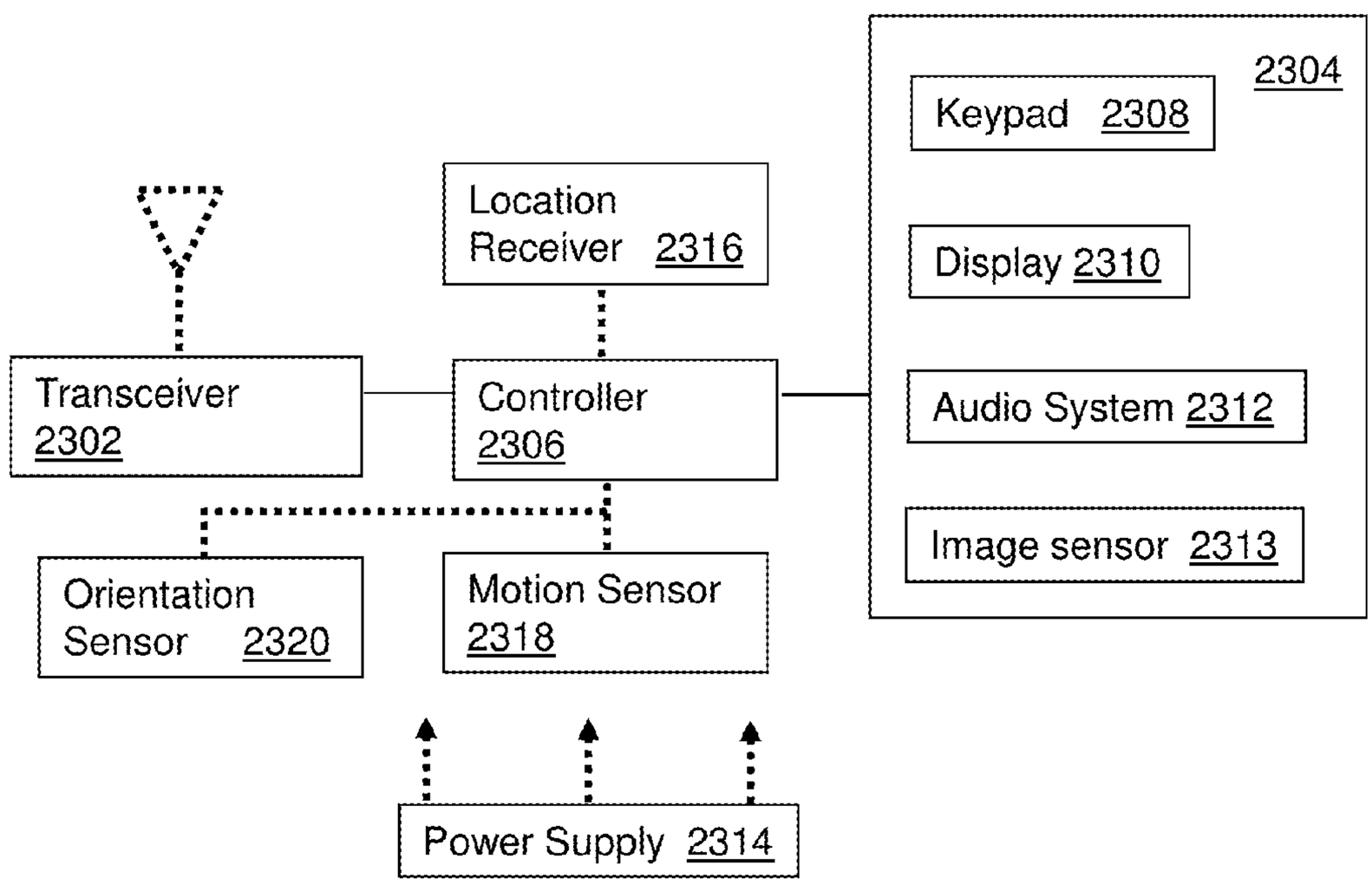
2304
Keypad 2308
Display 2310
Audio System 2312
Image sensor 2313
Location Receiver 2316
Transceiver 2302
Controller 2306
Orientation Sensor 2320
Motion Sensor 2318
Power Supply 2314

2300

FIG. 23

APPARATUS FOR PROVIDING COMMUNICATION SERVICES AND METHODS THEREOF

CROSS-REFERENCE TO RELATED APPLICATION(S)

This application is a continuation of U.S. patent application Ser. No. 14/519,388 filed Oct. 21, 2014 by Gerszberg et al., entitled "Apparatus for Providing Communication Services and Methods Thereof." All sections of the aforementioned application(s) are incorporated herein by reference in its entirety.

FIELD OF THE DISCLOSURE

The subject disclosure relates to an apparatus for providing communication services and methods thereof.

BACKGROUND

As smart phones and other portable devices increasingly become ubiquitous, and data usage increases, macrocell base station devices and existing wireless infrastructure in turn require higher bandwidth capability in order to address the increased demand. To provide additional mobile bandwidth, small cell deployment is being pursued, with microcells and picocells providing coverage for much smaller areas than traditional macrocells.

BRIEF DESCRIPTION OF THE DRAWINGS

Reference will now be made to the accompanying drawings, which are not necessarily drawn to scale, and wherein:

FIG. **1** is a block diagram illustrating an example, non-limiting embodiment of a guided wave communications system in accordance with various aspects described herein.

FIG. **2** is a block diagram illustrating an example, non-limiting embodiment of a dielectric waveguide coupler in accordance with various aspects described herein.

FIG. **3** is a block diagram illustrating an example, non-limiting embodiment of a dielectric waveguide coupler in accordance with various aspects described herein.

FIG. **4** is a block diagram illustrating an example, non-limiting embodiment of a dielectric waveguide coupler in accordance with various aspects described herein.

FIG. **5** is a block diagram illustrating an example, non-limiting embodiment of a dielectric waveguide coupler and transceiver in accordance with various aspects described herein.

FIG. **6** is a block diagram illustrating an example, non-limiting embodiment of a dual dielectric waveguide coupler in accordance with various aspects described herein.

FIG. **7** is a block diagram illustrating an example, non-limiting embodiment of a bidirectional dielectric waveguide coupler in accordance with various aspects described herein.

FIG. **8** illustrates a block diagram illustrating an example, non-limiting embodiment of a bidirectional dielectric waveguide coupler in accordance with various aspects described herein.

FIG. **9** illustrates a block diagram illustrating an example, non-limiting embodiment of a bidirectional repeater system in accordance with various aspects described herein.

FIGS. **10**A, **10**B, and **10**Care block diagrams illustrating example, non-limiting embodiments of a slotted waveguide coupler in accordance with various aspects described herein.

FIG. **11** is a block diagram illustrating an example, non-limiting embodiment of a waveguide coupling system in accordance with various aspects described herein

FIG. **12** is a block diagram illustrating an example, non-limiting embodiment of a waveguide coupling system in accordance with various aspects described herein.

FIG. **13** illustrates a flow diagram of an example, non-limiting embodiment of a method for transmitting a transmission with a dielectric waveguide coupler as described herein.

FIG. **14** is a block diagram illustrating an example, non-limiting embodiment of a waveguide system in accordance with various aspects described herein.

FIGS. **15**A, **15**B, **15**C, **15**D, **15**E, **15**F, and **15**G illustrate example, non-limiting embodiments of sources for disturbances detectable by the waveguide system of FIG. **14** as described herein.

FIG. **16** is a block diagram illustrating an example, non-limiting embodiment of a system for managing a power grid communication system in accordance with various aspects described herein.

FIG. **17**A illustrates a flow diagram of an example, non-limiting embodiment of a method for detecting and mitigating disturbances occurring in a communication network of the system of FIG. **16**.

FIG. **17**B illustrates a flow diagram of an example, non-limiting embodiment of a method for detecting and mitigating disturbances occurring in a communication network of the system of FIG. **16**.

FIG. **18**A illustrates an example, non-limiting embodiment for mitigating a disturbance detected by the waveguide system of FIG. **14** as described herein.

FIG. **18**B illustrates another example, non-limiting embodiment for mitigating a disturbance detected by the waveguide system of FIG. **14** as described herein.

FIG. **19** illustrates a flow diagram of an example, non-limiting embodiment of a method for providing communication services.

FIG. **20** is a block diagram of an example, non-limiting spectral embodiment for configuring communication services in accordance with various aspects described herein.

FIG. **21** is a block diagram of an example, non-limiting embodiment of a computing environment in accordance with various aspects described herein.

FIG. **22** is a block diagram of an example, non-limiting embodiment of a mobile network platform in accordance with various aspects described herein.

FIG. **23** is a block diagram of an example, non-limiting embodiment of a communication device in accordance with various aspects described herein.

DETAILED DESCRIPTION

One or more embodiments are now described with reference to the drawings, wherein like reference numerals are used to refer to like elements throughout. In the following description, for purposes of explanation, numerous details are set forth in order to provide a thorough understanding of the various embodiments. It is evident, however, that the various embodiments can be practiced without these details (and without applying to any particular networked environment or standard).

To provide network connectivity to additional base station devices, the backhaul network that links the communication cells (e.g., microcells and macrocells) to network devices of the core network correspondingly expands. Similarly, to provide network connectivity to a distributed antenna sys-

tem, an extended communication system that links base station devices and their distributed antennas is desirable. A guided wave communication system can be provided to enable alternative, increased or additional network connectivity and a waveguide coupling system can be provided to transmit and/or receive guided wave (e.g., surface wave) communications on a wire, such as a wire that operates as a single-wire transmission line (e.g., a utility line), that operates as a waveguide and/or that otherwise operates to guide the transmission of an electromagnetic wave.

In an embodiment, a waveguide coupler that is utilized in a waveguide coupling system can be made of a dielectric material, or other low-loss insulator (e.g., Teflon, polyethylene and etc.), or even be made of a conducting (e.g., metallic, non-metallic, etc.) material, or any combination of the foregoing materials. Reference throughout the detailed description to "dielectric waveguide" is for illustration purposes and does not limit embodiments to being constructed solely of dielectric materials. In other embodiments, other dielectric or insulating materials are possible. It will be appreciated that a variety of transmission media can be utilized with guided wave communications without departing from example embodiments. Examples of such transmission media can include one or more of the following, either alone or in one or more combinations: wires, whether insulated or not, and whether single-stranded or multi-stranded; conductors of other shapes or configurations including wire bundles, cables, rods, rails, pipes; non-conductors such as dielectric pipes, rods, rails, or other dielectric members; combinations of conductors and dielectric materials; or other guided wave transmission media.

For these and/or other considerations, in one or more embodiments, an apparatus comprises a waveguide that facilitates propagation of a first electromagnetic wave at least in part on a waveguide surface, wherein the waveguide surface does not surround in whole or in substantial part a wire surface of a wire, and, in response to the waveguide being positioned with respect to the wire, the first electromagnetic wave couples at least in part to the wire surface and travels at least partially around the wire surface as a second electromagnetic wave, and wherein the second electromagnetic wave has at least one wave propagation mode for propagating longitudinally along the wire.

In another embodiment, an apparatus comprises a waveguide that has a waveguide surface that defines a cross sectional area of the waveguide wherein a wire is positioned outside of the cross-sectional area of the waveguide such that a first electromagnetic wave, traveling along the wire at least in part on the wire surface, couples at least in part to the waveguide surface and travels at least partially around the waveguide surface as a second electromagnetic wave.

In an embodiment, a method comprises emitting, by a transmission device, a first electromagnetic wave that propagates at least in part on a waveguide surface of a waveguide, wherein the waveguide is not coaxially aligned with a wire. The method can also include configuring the waveguide in proximity of the wire to facilitate coupling of at least a part of the first electromagnetic wave to a wire surface, forming a second electromagnetic wave that propagates longitudinally along the wire and at least partially around the wire surface.

In another embodiment, an apparatus comprises, in one or more embodiments, a waveguide having a slot formed by opposing slot surfaces that are non-parallel, wherein the opposing slot surfaces are separated by a distance that enables insertion of a wire in the slot, wherein the waveguide facilitates propagation of a first electromagnetic wave at least in part on a waveguide surface, and, in response to the waveguide being positioned with respect to the wire, the first electromagnetic wave couples at least in part to a wire surface of the wire and travels at least partially around the wire surface as a second electromagnetic wave for propagating longitudinally along the wire, and wherein the second electromagnetic wave has at least one wave propagation mode.

In another embodiment, an apparatus comprises, in one or more embodiments, a waveguide, wherein the waveguide comprises a material that is not electrically conductive and is suitable for propagating electromagnetic waves on a waveguide surface of the waveguide, wherein the waveguide facilitates propagation of a first electromagnetic wave at least in part on the waveguide surface, and, in response to the waveguide being positioned with respect to a wire, the first electromagnetic wave couples at least in part to a wire surface of the wire and travels at least partially around the wire surface as a second electromagnetic wave, and wherein the second electromagnetic wave has at least one wave propagation mode for propagating longitudinally along the wire.

One embodiment of the subject disclosure includes an apparatus having a waveguide that facilitates transmission or reception of electromagnetic waves along a wire surface of a wire of a power grid that also facilitates delivery of electric energy to devices. The apparatus can further include one or more sensors that facilitate sensing of a disturbance that is adverse to the waveguide, the wire, the transmission or reception of electromagnetic waves that propagate along the wire surface or waveguide surface, or any combination thereof.

One embodiment of the subject disclosure includes a method for transmitting, by an apparatus having a waveguide and a sensor, electromagnetic waves that propagate along a wire surface of a wire that facilitates delivery of electric energy to devices, and sensing, by the sensor, a disturbance that is adverse to the electromagnetic waves that propagate along the wire surface.

One embodiment of the subject disclosure includes a machine-readable (e.g., computer-readable, processor-readable, etc.) storage medium having executable instructions that, when executed by a processor, facilitate performance of operations, including inducing with or via a waveguide, electromagnetic waves guided along a surface of a transmission medium, and collecting sensing data from a sensor, the sensing data associated with a disturbance that is adverse to the electromagnetic waves guided along the surface of the transmission medium.

One embodiment of the subject disclosure includes an apparatus having a processor and a memory. The processor can perform an operation of receiving telemetry information from a waveguide system coupled to a sensor, detecting from the telemetry information a disturbance that is adverse to one of operations of the waveguide system, the transmission or reception of the electromagnetic waves along the wire surface or the waveguide surface, or a combination thereof, and reporting the disturbance. The waveguide system can comprise a waveguide that can be positioned with respect to a wire of a power grid that facilitates delivery of electric energy to devices. The waveguide can also facilitate transmission or reception of electromagnetic waves along a wire surface of the wire, while the sensor can facilitate sensing disturbances adverse to electromagnetic waves.

One embodiment of the subject disclosure includes a method for receiving, by a network element comprising a processor, telemetry information from a waveguide system,

determining, by the network element, a disturbance from sensing data included in the telemetry information, and transmitting, by the network element, instructions to the waveguide system to adjust a route of the electromagnetic waves to avoid or compensate for the disturbance determined. The waveguide system can facilitate transmission of electromagnetic waves along a wire surface of a wire of a power grid and sensing of disturbances adverse to the transmission or reception of the electromagnetic waves.

One embodiment of the subject disclosure includes a machine-readable (e.g., computer-readable, processor-readable, etc.) storage medium having executable instructions that, when executed by a processor, facilitate performance of operations, including receiving telemetry information from an apparatus that induces electromagnetic waves on a wire surface of a wire of a power grid for delivery of communication signals to a recipient communication device coupled to the power grid, and detecting a disturbance from the telemetry information that is adverse to a delivery of the communication signals to the recipient communication device.

One embodiment of the subject disclosure includes a method for modulating, by an apparatus, a first electrical signal to generate first modulated electromagnetic waves, and transmitting, by the apparatus, the first modulated electromagnetic waves on a waveguide located in proximity to a transmission medium. In one embodiment, the first electromagnetic waves can induce second electromagnetic waves that propagate at least in part on an outer surface of the transmission medium. The second electromagnetic waves can have a first spectral range that is divided into, contains or otherwise includes a first control channel and a first plurality of bands.

One embodiment of the subject disclosure includes an apparatus including a transmitter that facilitates generating first electromagnetic waves, and a waveguide that facilitates propagation of the first electromagnetic waves at least in part along a surface of the waveguide. In one embodiment, the first electromagnetic waves can couple at least in part to a surface of a transmission medium to generate second electromagnetic waves that propagate at least in part on the surface of the transmission medium. The second electromagnetic waves can have a first spectral range divided into, contains or otherwise includes a first control channel and a first plurality of bands. In one embodiment, the first electromagnetic waves can have a first propagation mode, while the second electromagnetic waves can have a second propagation mode. In one embodiment, the first propagation mode can differ from the second propagation mode.

One embodiment of the subject disclosure a waveguide system including a waveguide, and a transceiver coupled to the at least one waveguide. The waveguide can facilitate propagating first electromagnetic waves at least in part on a surface of the waveguide to generate second electromagnetic waves that propagate at least in part on a surface of a transmission medium. The waveguide can also facilitate propagating fourth electromagnetic waves at least in part on the surface of the waveguide that are generated from third electromagnetic waves propagating at least in part along the surface of the transmission medium. In one embodiment, the second electromagnetic waves have a first spectral range divided into, contains or otherwise includes a first control channel and a first plurality of bands, while the fourth electromagnetic waves have a second spectral range divided into, contains or otherwise includes a second control channel and a second plurality of bands.

Various embodiments described herein relate to a waveguide coupling system for launching and extracting guided wave (e.g., surface wave communications that are electromagnetic waves) transmissions from a wire. At millimeter-wave frequencies (e.g., 30 to 300 GHz), wherein the wavelength can be small compared to the size of the equipment, transmissions can propagate as waves guided by a waveguide, such as a strip or length of dielectric material or other coupler. The electromagnetic field structure of the guided wave can be inside and/or outside of the waveguide. When this waveguide is brought into close proximity to a wire (e.g., a utility line or other transmission line), at least a portion of the guided waves decouples from the waveguide and couples to the wire, and continue to propagate as guided waves, such as surface waves about the surface of the wire.

According to an example embodiment, a surface wave is a type of guided wave that is guided by a surface of the wire, which can include an exterior or outer surface of the wire, or another surface of the wire that is adjacent to or exposed to another type of medium having different properties (e.g., dielectric properties). Indeed, in an example embodiment, a surface of the wire that guides a surface wave can represent a transitional surface between two different types of media. For example, in the case of a bare or uninsulated wire, the surface of the wire can be the outer or exterior conductive surface of the bare or uninsulated wire that is exposed to air or free space. As another example, in the case of insulated wire, the surface of the wire can be the conductive portion of the wire that meets the insulator portion of the wire, or can otherwise be the insulator surface of the wire that is exposed to air or free space, or can otherwise be any material region between the insulator surface of the wire and the conductive portion of the wire that meets the insulator portion of the wire, depending upon the relative differences in the properties (e.g., dielectric properties) of the insulator, air, and/or the conductor and further dependent on the frequency and propagation mode or modes of the guided wave.

According to an example embodiment, guided waves such as surface waves can be contrasted with radio transmissions over free space/air or conventional propagation of electrical power or signals through the conductor of the wire. Indeed, with surface wave or guided wave systems described herein, conventional electrical power or signals can still propagate or be transmitted through the conductor of the wire, while guided waves (including surface waves and other electromagnetic waves) can propagate or be transmitted about the surface of the wire, according to an example embodiment. In an embodiment, a surface wave can have a field structure (e.g., an electromagnetic field structure) that lies primarily or substantially outside of the line, wire, or transmission medium that serves to guide the surface wave.

According to an example embodiment, the electromagnetic waves traveling along the wire and around the outer surface of the wire are induced by other electromagnetic waves traveling along a waveguide in proximity to the wire. The inducement of the electromagnetic waves can be independent of any electrical potential, charge or current that is injected or otherwise transmitted through the wires as part of an electrical circuit. It is to be appreciated that while a small current in the wire may be formed in response to the propagation of the electromagnetic wave along the wire, this can be due to the propagation of the electromagnetic wave along the wire surface, and is not formed in response to electrical potential, charge or current that is injected into the wire as part of an electrical circuit. The electromagnetic waves traveling on the wire therefore do not require a circuit to propagate along the wire surface. The wire therefore is a

single wire transmission line that is not part of a circuit. Also, in some embodiments, a wire is not necessary, and the electromagnetic waves can propagate along a single line transmission medium that is not a wire.

According to an example embodiment, the term "about" a wire used in conjunction with a guided wave (e.g., surface wave) can include fundamental wave propagation modes and other guided waves having a circular or substantially circular field distribution (e.g., electric field, magnetic field, electromagnetic field, etc.) at least partially around a wire or other transmission medium. In addition, when a guided wave propagates "about" a wire or other transmission medium, it can do so according to a wave propagation mode that includes not only the fundamental wave propagation modes (e.g., zero order modes), but additionally or alternatively other non-fundamental wave propagation modes such as higher-order guided wave modes (e.g., 1st order modes, 2nd order modes, etc.), asymmetrical modes and/or other guided (e.g., surface) waves that have non-circular field distributions around a wire or other transmission medium.

For example, such non-circular field distributions can be unilateral or multi-lateral with one or more axial lobes characterized by relatively higher field strength and/or one or more nulls or null regions characterized by relatively low-field strength, zero-field strength or substantially zero field strength. Further, the field distribution can otherwise vary as a function of a longitudinal axial orientation around the wire such that one or more regions of axial orientation around the wire have an electric or magnetic field strength (or combination thereof) that is higher than one or more other regions of axial orientation, according to an example embodiment. It will be appreciated that the relative positions of the wave higher order modes or asymmetrical modes can vary as the guided wave travels along the wire.

Referring now to FIG. **1**, a block diagram illustrating an example, non-limiting embodiment of a guided wave communication system **100** is shown. Guided wave communication system **100** depicts an exemplary environment in which a dielectric waveguide coupling system can be used.

Guided wave communication system **100** can comprise a first instance of a distributed system **150** that includes one or more base station devices (e.g., base station device **104**) that are communicably coupled to a central office **101** and/or a macrocell site **102**. Base station device **104** can be connected by a wired (e.g., fiber and/or cable), or by a wireless (e.g., microwave wireless) connection to the macrocell site **102** and the central office **101**. A second instance of the distributed system **160** can be used to provide wireless voice and data services to mobile device **122** and to residential and/or commercial establishments **142** (herein referred to as establishments **142**). System **100** can have additional instances of the distribution systems **150** and **160** for providing voice and/or data services to mobile devices **122-124** and establishments **142** as shown in FIG. **1**.

Macrocells such as macrocell site **102** can have dedicated connections to the mobile network and base station device **104** can share and/or otherwise use macrocell site **102**'s connection. Central office **101** can be used to distribute media content and/or provide internet service provider (ISP) services to mobile devices **122-124** and establishments **142**. The central office **101** can receive media content from a constellation of satellites **130** (one of which is shown in FIG. **1**) or other sources of content, and distribute such content to mobile devices **122-124** and establishments **142** via the first and second instances of the distribution system **15** and **160**. The central office **101** can also be communicatively coupled to the Internet **103** for providing internet data services to mobile devices **122-124** and establishments **142**.

Base station device **104** can be mounted on, or attached to, utility pole **116**. In other embodiments, base station device **104** can be near transformers and/or other locations situated nearby a power line. Base station device **104** can facilitate connectivity to a mobile network for mobile devices **122** and **124**. Antennas **112** and **114**, mounted on or near utility poles **118** and **120**, respectively, can receive signals from base station device **104** and transmit those signals to mobile devices **122** and **124** over a much wider area than if the antennas **112** and **114** were located at or near base station device **104**.

It is noted that FIG. **1** displays three utility poles, in each instance of the distribution systems **150** and **160**, with one base station device, for purposes of simplicity. In other embodiments, utility pole **116** can have more base station devices, and more utility poles with distributed antennas and/or tethered connections to establishments **142**.

A dielectric waveguide coupling device **106** can transmit the signal from base station device **104** to antennas **112** and **114** via utility or power line(s) that connect the utility poles **116**, **118**, and **120**. To transmit the signal, radio source and/or coupler **106** upconverts the signal (e.g., via frequency mixing) from base station device **104** or otherwise converts the signal from the base station device **104** to a millimeter-wave band signal and the dielectric waveguide coupling device **106** launches a millimeter-wave band wave that propagates as a guided wave (e.g., surface wave or other electromagnetic wave) traveling along the utility line or other wire. At utility pole **118**, another dielectric waveguide coupling device **108** receives the guided wave (and optionally can amplify it as needed or desired or operate as a digital repeater to receive it and regenerate it) and sends it forward as a guided wave (e.g., surface wave or other electromagnetic wave) on the utility line or other wire. The dielectric waveguide coupling device **108** can also extract a signal from the millimeter-wave band guided wave and shift it down in frequency or otherwise convert it to its original cellular band frequency (e.g., 1.9 GHz or other defined cellular frequency) or another cellular (or non-cellular) band frequency. An antenna **112** can transmit (e.g., wireles sly transmit) the downshifted signal to mobile device **122**. The process can be repeated by dielectric waveguide coupling device **110**, antenna **114** and mobile device **124**, as necessary or desirable.

Transmissions from mobile devices **122** and **124** can also be received by antennas **112** and **114** respectively. Repeaters on dielectric waveguide coupling devices **108** and **110** can upshift or otherwise convert the cellular band signals to millimeter-wave band and transmit the signals as guided wave (e.g., surface wave or other electromagnetic wave) transmissions over the power line(s) to base station device **104**.

Media content received by the central office **101** can be supplied to the second instance of the distribution system **160** via the base station device **104** for distribution to mobile devices **122** and establishments **142**. The dielectric waveguide coupling device **110** can be tethered to the establishments **142** by one or more wired connections or a wireless interface. The one or more wired connections, may include without limitation, a power line, a coaxial cable, a fiber cable, a twisted pair cable, or other suitable wired mediums for distribution of media content and/or for providing internet services. In an example embodiment, the wired connections from the waveguide coupling device **110** can be communicatively coupled to one or more very high bit rate

digital subscriber line (VDSL) modems located at one or more corresponding service area interfaces (SAIs—not shown), each SAI providing services to a portion of the establishments **142**. The VDSL modems can be used to selectively distribute media content and/or provide internet services to gateways (not shown) located in the establishments **142**. The SAIs can also be communicatively coupled to the establishments **142** over a wired medium such as a power line, a coaxial cable, a fiber cable, a twisted pair cable, or other suitable wired mediums. In other example embodiments, the waveguide coupling device **110** can be communicatively coupled directly to establishments **142** without intermediate interfaces such as the SAIs.

In another example embodiment, system **100** can employ diversity paths, where two or more utility lines or other wires are strung between the utility poles **116**, **118**, and **120** (e.g., for example, two or more wires between poles **116** and **120**) and redundant transmissions from base station **104** are transmitted as guided waves down the surface of the utility lines or other wires. The utility lines or other wires can be either insulated or uninsulated, and depending on the environmental conditions that cause transmission losses, the coupling devices can selectively receive signals from the insulated or uninsulated utility lines or other wires. The selection can be based on measurements of the signal-to-noise ratio of the wires, or based on determined weather/environmental conditions (e.g., moisture detectors, weather forecasts, etc.). The use of diversity paths with system **100** can enable alternate routing capabilities, load balancing, increased load handling, concurrent bi-directional or synchronous communications, spread spectrum communications, etc. (See FIG. **8** for more illustrative details).

It is noted that the use of the dielectric waveguide coupling devices **106**, **108**, and **110** in FIG. **1** are by way of example only, and that in other embodiments, other uses are possible. For instance, dielectric waveguide coupling devices can be used in a backhaul communication system, providing network connectivity to base station devices. Dielectric waveguide coupling devices can be used in many circumstances where it is desirable to transmit guided wave communications over a wire, whether insulated or not insulated. Dielectric waveguide coupling devices are improvements over other coupling devices due to no contact or limited physical and/or electrical contact with the wires that may carry high voltages. With dielectric waveguide coupling devices, the apparatus can be located away from the wire (e.g., spaced apart from the wire) and/or located on the wire so long as it is not electrically in contact with the wire, as the dielectric acts as an insulator, allowing for cheap, easy, and/or less complex installation. However, as previously noted conducting or non-dielectric couplers can be employed, for example in configurations where the wires correspond to a telephone network, cable television network, broadband data service, fiber optic communications system or other network employing low voltages or having insulated transmission lines.

It is further noted, that while base station device **104** and macrocell site **102** are illustrated in an embodiment, other network configurations are likewise possible. For example, devices such as access points or other wireless gateways can be employed in a similar fashion to extend the reach of other networks such as a wireless local area network, a wireless personal area network or other wireless network that operates in accordance with a communication protocol such as a 802.11 protocol, WIMAX protocol, UltraWideband protocol, Bluetooth protocol, Zigbee protocol or other wireless protocol.

Turning now to FIG. **2**, illustrated is a block diagram of an example, non-limiting embodiment of a dielectric waveguide coupling system **200** in accordance with various aspects described herein. System **200** comprises a dielectric waveguide **204** that has a wave **206** propagating as a guided wave about a waveguide surface of the dielectric waveguide **204**. In an embodiment, the dielectric waveguide **204** is curved, and at least a portion of the waveguide **204** can be placed near a wire **202** in order to facilitate coupling between the waveguide **204** and the wire **202**, as described herein. The dielectric waveguide **204** can be placed such that a portion of the curved dielectric waveguide **204** is parallel or substantially parallel to the wire **202**. The portion of the dielectric waveguide **204** that is parallel to the wire can be an apex of the curve, or any point where a tangent of the curve is parallel to the wire **202**. When the dielectric waveguide **204** is positioned or placed thusly, the wave **206** travelling along the dielectric waveguide **204** couples, at least in part, to the wire **202**, and propagates as guided wave **208** around or about the wire surface of the wire **202** and longitudinally along the wire **202**. The guided wave **208** can be characterized as a surface wave or other electromagnetic wave, although other types of guided waves **208** can supported as well without departing from example embodiments.

A portion of the wave **206** that does not couple to the wire **202** propagates as wave **210** along the dielectric waveguide **204**. It will be appreciated that the dielectric waveguide **204** can be configured and arranged in a variety of positions in relation to the wire **202** to achieve a desired level of coupling or non-coupling of the wave **206** to the wire **202**. For example, the curvature and/or length of the dielectric waveguide **2014** that is parallel or substantially parallel, as well as its separation distance (which can include zero separation distance in an embodiment), to the wire **202** can be varied without departing for example embodiments. Likewise, the arrangement of dielectric waveguide **204** in relation to the wire **202** may be varied based upon considerations of the respective intrinsic characteristics (e.g., thickness, composition, electromagnetic properties, etc.) of the wire **202** and the dielectric waveguide **204**, as well as the characteristics (e.g., frequency, energy level, etc.) of the waves **206** and **208**.

The guided wave **208** stays parallel or substantially parallel to the wire **202**, even as the wire **202** bends and flexes. Bends in the wire **202** can increase transmission losses, which are also dependent on wire diameters, frequency, and materials. If the dimensions of the dielectric waveguide **204** are chosen for efficient power transfer, most of the power in the wave **206** is transferred to the wire **202**, with little power remaining in wave **210**. It will be appreciated that the guided wave **208** can still be multi-modal in nature (discussed herein), including having modes that are non-fundamental or asymmetric, while traveling along a path that is parallel or substantially parallel to the wire **202**, with or without a fundamental transmission mode. In an embodiment, non-fundamental or asymmetric modes can be utilized to minimize transmission losses and/or obtain increased propagation distances.

It is noted that the term parallel is generally a geometric construct which often is not exactly achievable in real systems. Accordingly, the term parallel as utilized in the subject disclosure represents an approximation rather than an exact configuration when used to describe embodiments disclosed in the subject disclosure. In an embodiment, substantially parallel can include approximations that are within 30 degrees of true parallel in all dimensions.

In an embodiment, the wave **206** can exhibit one or more wave propagation modes. The dielectric waveguide modes can be dependent on the shape and/or design of the waveguide **204**. The one or more dielectric waveguide modes of wave **206** can generate, influence, or impact one or more wave propagation modes of the guided wave **208** propagating along wire **202**. In an embodiment, the wave propagation modes on the wire **202** can be similar to the dielectric waveguide modes since both waves **206** and **208** propagate about the outside of the dielectric waveguide **204** and wire **202** respectively. In some embodiments, as the wave **206** couples to the wire **202**, the modes can change form, or new modes can be created or generated, due to the coupling between the dielectric waveguide **204** and the wire **202**. For example, differences in size, material, and/or impedances of the dielectric waveguide **204** and wire **202** may create additional modes not present in the dielectric waveguide modes and/or suppress some of the dielectric waveguide modes. The wave propagation modes can comprise the fundamental transverse electromagnetic mode (Quasi-TEM_{00}), where only small electric and/or magnetic fields extend in the direction of propagation, and the electric and magnetic fields extend radially outwards while the guided wave propagates along the wire. This guided wave mode can be donut shaped, where few of the electromagnetic fields exist within the dielectric waveguide **204** or wire **202**.

Waves **206** and **208** can comprise a fundamental TEM mode where the fields extend radially outwards, and also comprise other, non-fundamental (e.g., asymmetric, higher-level, etc.) modes. While particular wave propagation modes are discussed above, other wave propagation modes are likewise possible such as transverse electric (TE) and transverse magnetic (TM) modes, based on the frequencies employed, the design of the dielectric waveguide **204**, the dimensions and composition of the wire **202**, as well as its surface characteristics, its optional insulation, the electromagnetic properties of the surrounding environment, etc. It should be noted that, depending on the frequency, the electrical and physical characteristics of the wire **202** and the particular wave propagation modes that are generated, guided wave **208** can travel along the conductive surface of an oxidized uninsulated wire, an unoxidized uninsulated wire, an insulated wire and/or along the insulating surface of an insulated wire.

In an embodiment, a diameter of the dielectric waveguide **204** is smaller than the diameter of the wire **202**. For the millimeter-band wavelength being used, the dielectric waveguide **204** supports a single waveguide mode that makes up wave **206**. This single waveguide mode can change as it couples to the wire **202** as surface **208**. If the dielectric waveguide **204** were larger, more than one waveguide mode can be supported, but these additional waveguide modes may not couple to the wire **202** as efficiently, and higher coupling losses can result. However, in some alternative embodiments, the diameter of the dielectric waveguide **204** can be equal to or larger than the diameter of the wire **202**, for example, where higher coupling losses are desirable or when used in conjunction with other techniques to otherwise reduce coupling losses (e.g., impedance matching with tapering, etc.).

In an embodiment, the wavelength of the waves **206** and **208** are comparable in size, or smaller than a circumference of the dielectric waveguide **204** and the wire **202**. In an example, if the wire **202** has a diameter of 0.5 cm, and a corresponding circumference of around 1.5 cm, the wavelength of the transmission is around 1.5 cm or less, corresponding to a frequency of 20 GHz or greater. In another embodiment, a suitable frequency of the transmission and the carrier-wave signal is in the range of 30-100 GHz, perhaps around 30-60 GHz, and around 38 GHz in one example. In an embodiment, when the circumference of the dielectric waveguide **204** and wire **202** is comparable in size to, or greater, than a wavelength of the transmission, the waves **206** and **208** can exhibit multiple wave propagation modes including fundamental and/or non-fundamental (symmetric and/or asymmetric) modes that propagate over sufficient distances to support various communication systems described herein. The waves **206** and **208** can therefore comprise more than one type of electric and magnetic field configuration. In an embodiment, as the guided wave **208** propagates down the wire **202**, the electrical and magnetic field configurations will remain the same from end to end of the wire **202**. In other embodiments, as the guided wave **208** encounters interference or loses energy due to transmission losses, the electric and magnetic field configurations can change as the guided wave **208** propagates down wire **202**.

In an embodiment, the dielectric waveguide **204** can be composed of nylon, Teflon, polyethylene, a polyamide, or other plastics. In other embodiments, other dielectric materials are possible. The wire surface of wire **202** can be metallic with either a bare metallic surface, or can be insulated using plastic, dielectric, insulator or other sheathing. In an embodiment, a dielectric or otherwise non-conducting/insulated waveguide can be paired with either a bare/metallic wire or insulated wire. In other embodiments, a metallic and/or conductive waveguide can be paired with a bare/metallic wire or insulated wire. In an embodiment, an oxidation layer on the bare metallic surface of the wire **202** (e.g., resulting from exposure of the bare metallic surface to oxygen/air) can also provide insulating or dielectric properties similar to those provided by some insulators or sheathings.

It is noted that the graphical representations of waves **206**, **208** and **210** are presented merely to illustrate the principles that wave **206** induces or otherwise launches a guided wave **208** on a wire **202** that operates, for example, as a single wire transmission line. Wave **210** represents the portion of wave **206** that remains on the dielectric waveguide **204** after the generation of guided wave **208**. The actual electric and magnetic fields generated as a result of such wave propagation may vary depending on the frequencies employed, the particular wave propagation mode or modes, the design of the dielectric waveguide **204**, the dimensions and composition of the wire **202**, as well as its surface characteristics, its optional insulation, the electromagnetic properties of the surrounding environment, etc.

It is noted that dielectric waveguide **204** can include a termination circuit or damper **214** at the end of the dielectric waveguide **204** that can absorb leftover radiation or energy from wave **210**. The termination circuit or damper **214** can prevent and/or minimize the leftover radiation or energy from wave **210** reflecting back toward transmitter circuit **212**. In an embodiment, the termination circuit or damper **214** can include termination resistors, and/or other components that perform impedance matching to attenuate reflection. In some embodiments, if the coupling efficiencies are high enough, and/or wave **210** is sufficiently small, it may not be necessary to use a termination circuit or damper **214**. For the sake of simplicity, these transmitter and termination circuits or dampers **212** and **214** are not depicted in the other figures, but in those embodiments, transmitter and termination circuits or dampers may possibly be used.

Further, while a single dielectric waveguide **204** is presented that generates a single guided wave **208**, multiple

dielectric waveguides **204** placed at different points along the wire **202** and/or at different axial orientations about the wire can be employed to generate and receive multiple guided waves **208** at the same or different frequencies, at the same or different phases, at the same or different wave propagation modes. The guided wave or waves **208** can be modulated to convey data via a modulation technique such as phase shift keying, frequency shift keying, quadrature amplitude modulation, amplitude modulation, multi-carrier modulation and via multiple access techniques such as frequency division multiplexing, time division multiplexing, code division multiplexing, multiplexing via differing wave propagation modes and via other modulation and access strategies.

Turning now to FIG. **3**, illustrated is a block diagram of an example, non-limiting embodiment of a dielectric waveguide coupling system **300** in accordance with various aspects described herein. System **300** comprises a dielectric waveguide **304** and a wire **302** that has a wave **306** propagating as a guided wave about a wire surface of the wire **302**. In an example embodiment, the wave **306** can be characterized as a surface wave or other electromagnetic wave.

In an example embodiment, the dielectric waveguide **304** is curved or otherwise has a curvature, and can be placed near a wire **302** such that a portion of the curved dielectric waveguide **304** is parallel or substantially parallel to the wire **302**. The portion of the dielectric waveguide **304** that is parallel to the wire can be an apex of the curve, or any point where a tangent of the curve is parallel to the wire **302**. When the dielectric waveguide **304** is near the wire, the guided wave **306** travelling along the wire **302** can couple to the dielectric waveguide **304** and propagate as guided wave **308** about the dielectric waveguide **304**. A portion of the guided wave **306** that does not couple to the dielectric waveguide **304** propagates as guided wave **310** (e.g., surface wave or other electromagnetic wave) along the wire **302**.

The guided waves **306** and **308** stay parallel to the wire **302** and dielectric waveguide **304**, respectively, even as the wire **302** and dielectric waveguide **304** bend and flex. Bends can increase transmission losses, which are also dependent on wire diameters, frequency, and materials. If the dimensions of the dielectric waveguide **304** are chosen for efficient power transfer, most of the energy in the guided wave **306** is coupled to the dielectric waveguide **304** and little remains in guided wave **310**.

In an embodiment, a receiver circuit can be placed on the end of waveguide **304** in order to receive wave **308**. A termination circuit can be placed on the opposite end of the waveguide **304** in order to receive guided waves traveling in the opposite direction to guided wave **306** that couple to the waveguide **304**. The termination circuit would thus prevent and/or minimize reflections being received by the receiver circuit. If the reflections are small, the termination circuit may not be necessary.

It is noted that the dielectric waveguide **304** can be configured such that selected polarizations of the surface wave **306** are coupled to the dielectric waveguide **304** as guided wave **308**. For instance, if guided wave **306** is made up of guided waves or wave propagation modes with respective polarizations, dielectric waveguide **304** can be configured to receive one or more guided waves of selected polarization(s). Guided wave **308** that couples to the dielectric waveguide **304** is thus the set of guided waves that correspond to one or more of the selected polarization(s), and further guided wave **310** can comprise the guided waves that do not match the selected polarization(s).

The dielectric waveguide **304** can be configured to receive guided waves of a particular polarization based on an angle/rotation around the wire **302** that the dielectric waveguide **304** is placed. For instance, if the guided wave **306** is polarized horizontally, most of the guided wave **306** transfers to the dielectric waveguide as wave **308**. As the dielectric waveguide **304** is rotated 90 degrees around the wire **302**, though, most of the energy from guided wave **306** would remain coupled to the wire as guided wave **310**, and only a small portion would couple to the wire **302** as wave **308**.

It is noted that waves **306**, **308**, and **310** are shown using three circular symbols in FIG. **3** and in other figures in the specification. These symbols are used to represent a general guided wave, but do not imply that the waves **306**, **308**, and **310** are necessarily circularly polarized or otherwise circularly oriented. In fact, waves **306**, **308**, and **310** can comprise a fundamental TEM mode where the fields extend radially outwards, and also comprise other, non-fundamental (e.g. higher-level, etc.) modes. These modes can be asymmetric (e.g., radial, bilateral, trilateral, quadrilateral, etc,) in nature as well.

It is noted also that guided wave communications over wires can be full duplex, allowing simultaneous communications in both directions. Waves traveling one direction can pass through waves traveling in an opposite direction. Electromagnetic fields may cancel out at certain points and for short times due to the superposition principle as applied to waves. The waves traveling in opposite directions propagate as if the other waves weren't there, but the composite effect to an observer may be a stationary standing wave pattern. As the guided waves pass through each other and are no longer in a state of superposition, the interference subsides. As a guided wave (e.g., surface wave or other electromagnetic wave) couples to a waveguide and move away from the wire, any interference due to other guided waves (e.g., surface waves or other electromagnetic wave) decreases. In an embodiment, as guided wave **306** (e.g., surface wave or other electromagnetic wave) approaches dielectric waveguide **304**, another guided wave (e.g., surface wave or other electromagnetic wave) (not shown) traveling from left to right on the wire **302** passes by causing local interference. As guided wave **306** couples to dielectric waveguide **304** as wave **308**, and moves away from the wire **302**, any interference due to the passing guided wave subsides.

It is noted that the graphical representations of waves **306**, **308** and **310** are presented merely to illustrate the principles that guided wave **306** induces or otherwise launches a wave **308** on a dielectric waveguide **304**. Guided wave **310** represents the portion of guided wave **306** that remains on the wire **302** after the generation of wave **308**. The actual electric and magnetic fields generated as a result of such guided wave propagation may vary depending on one or more of the shape and/or design of the dielectric waveguide, the relative position of the dielectric waveguide to the wire, the frequencies employed, the design of the dielectric waveguide **304**, the dimensions and composition of the wire **302**, as well as its surface characteristics, its optional insulation, the electromagnetic properties of the surrounding environment, etc.

Turning now to FIG. **4**, illustrated is a block diagram of an example, non-limiting embodiment of a dielectric waveguide coupling system **400** in accordance with various aspects described herein. System **400** comprises a dielectric waveguide **404** that has a wave **406** propagating as a guided wave about a waveguide surface of the dielectric waveguide **404**. In an embodiment, the dielectric waveguide **404** is

curved, and an end of the dielectric waveguide **404** can be tied, fastened, or otherwise mechanically coupled to a wire **402**. When the end of the dielectric waveguide **404** is fastened to the wire **402**, the end of the dielectric waveguide **404** is parallel or substantially parallel to the wire **402**. Alternatively, another portion of the dielectric waveguide beyond an end can be fastened or coupled to wire **402** such that the fastened or coupled portion is parallel or substantially parallel to the wire **402**. The coupling device **410** can be a nylon cable tie or other type of non-conducting/dielectric material that is either separate from the dielectric waveguide **404** or constructed as an integrated component of the dielectric waveguide **404**. The dielectric waveguide **404** can be adjacent to the wire **402** without surrounding the wire **402**.

When the dielectric waveguide **404** is placed with the end parallel to the wire **402**, the guided wave **406** travelling along the dielectric waveguide **404** couples to the wire **402**, and propagates as guided wave **408** about the wire surface of the wire **402**. In an example embodiment, the guided wave **408** can be characterized as a surface wave or other electromagnetic wave.

It is noted that the graphical representations of waves **406** and **408** are presented merely to illustrate the principles that wave **406** induces or otherwise launches a guided wave **408** on a wire **402** that operates, for example, as a single wire transmission line. The actual electric and magnetic fields generated as a result of such wave propagation may vary depending on one or more of the shape and/or design of the dielectric waveguide, the relative position of the dielectric waveguide to the wire, the frequencies employed, the design of the dielectric waveguide **404**, the dimensions and composition of the wire **402**, as well as its surface characteristics, its optional insulation, the electromagnetic properties of the surrounding environment, etc.

In an embodiment, an end of dielectric waveguide **404** can taper towards the wire **402** in order to increase coupling efficiencies. Indeed, the tapering of the end of the dielectric waveguide **404** can provide impedance matching to the wire **402**, according to an example embodiment of the subject disclosure. For example, an end of the dielectric waveguide **404** can be gradually tapered in order to obtain a desired level of coupling between waves **406** and **408** as illustrated in FIG. **4**.

In an embodiment, the coupling device **410** can be placed such that there is a short length of the dielectric waveguide **404** between the coupling device **410** and an end of the dielectric waveguide **404**. Maximum coupling efficiencies are realized when the length of the end of the dielectric waveguide **404** that is beyond the coupling device **410** is at least several wavelengths long for whatever frequency is being transmitted.

Turning now to FIG. **5**, illustrated is a block diagram of an example, non-limiting embodiment of a dielectric waveguide coupler and transceiver system **500** (referred to herein collectively as system **500**) in accordance with various aspects described herein. System **500** comprises a transmitter/receiver device **506** that launches and receives waves (e.g., guided wave **504** onto dielectric waveguide **502**). The guided waves **504** can be used to transport signals received from and sent to a base station **520**, mobile devices **522**, or a building **524** by way of a communications interface **501**. The communications interface **501** can be an integral part of system **500**. Alternatively, the communications interface **501** can be tethered to system **500**. The communications interface **501** can comprise a wireless interface for interfacing to the base station **520**, the mobile devices **522**, or building **524** utilizing any of various wireless signaling protocols (e.g., LTE, WiFi, WiMAX, IEEE 802.xx, etc.). The communications interface **501** can also comprise a wired interface such as a fiber optic line, coaxial cable, twisted pair, or other suitable wired mediums for transmitting signals to the base station **520** or building **524**. For embodiments where system **500** functions as a repeater, the communications interface **501** may not be necessary.

The output signals (e.g., Tx) of the communications interface **501** can be combined with a millimeter-wave carrier wave generated by a local oscillator **512** at frequency mixer **510**. Frequency mixer **512** can use heterodyning techniques or other frequency shifting techniques to frequency shift the output signals from communications interface **501**. For example, signals sent to and from the communications interface **501** can be modulated signals such as orthogonal frequency division multiplexed (OFDM) signals formatted in accordance with a Long-Term Evolution (LTE) wireless protocol or other wireless 3G, 4G, 5G or higher voice and data protocol, a Zigbee, WIMAX, UltraWideband or IEEE 802.11 wireless protocol or other wireless protocol. In an example embodiment, this frequency conversion can be done in the analog domain, and as a result, the frequency shifting can be done without regard to the type of communications protocol that the base station **520**, mobile devices **522**, or in-building devices **524** use. As new communications technologies are developed, the communications interface **501** can be upgraded or replaced and the frequency shifting and transmission apparatus can remain, simplifying upgrades. The carrier wave can then be sent to a power amplifier ("PA") **514** and can be transmitted via the transmitter receiver device **506** via the diplexer **516**.

Signals received from the transmitter/receiver device **506** that are directed towards the communications interface **501** can be separated from other signals via diplexer **516**. The transmission can then be sent to low noise amplifier ("LNA") **518** for amplification. A frequency mixer **521**, with help from local oscillator **512** can downshift the transmission (which is in the millimeter-wave band or around 38 GHz in some embodiments) to the native frequency. The communications interface **501** can then receive the transmission at an input port (Rx).

In an embodiment, transmitter/receiver device **506** can include a cylindrical or non-cylindrical metal (which, for example, can be hollow in an embodiment, but not necessarily drawn to scale) or other conducting or non-conducting waveguide and an end of the dielectric waveguide **502** can be placed in or in proximity to the waveguide or the transmitter/receiver device **506** such that when the transmitter/receiver device **506** generates a transmission, the guided wave couples to dielectric waveguide **502** and propagates as a guided wave **504** about the waveguide surface of the dielectric waveguide **502**. In some embodiments, the guided wave **504** can propagate in part on the outer surface of the dielectric waveguide **502** and in part inside the dielectric waveguide **502**. In other embodiments, the guided wave **504** can propagate substantially or completely on the outer surface of the dielectric waveguide **502**. In yet other embodiments, the guided wave **504** can propagate substantially or completely inside the dielectric waveguide **502**. In this latter embodiment, the guide wave **504** can radiate at an end of the dielectric waveguide **502** (such as the tapered end shown in FIG. **4**) for coupling to a transmission medium such as a wire **402** of FIG. **4**. Similarly, if guided wave **504** is incoming (coupled to the dielectric waveguide **502** from a wire), guided wave **504** then enters the transmitter/receiver device **506** and couples to the cylindrical waveguide or conducting

waveguide. While transmitter/receiver device **506** is shown to include a separate waveguide—an antenna, cavity resonator, klystron, magnetron, travelling wave tube, or other radiating element can be employed to induce a guided wave on the waveguide **502**, without the separate waveguide.

In an embodiment, dielectric waveguide **502** can be wholly constructed of a dielectric material (or another suitable insulating material), without any metallic or otherwise conducting materials therein. Dielectric waveguide **502** can be composed of nylon, Teflon, polyethylene, a polyamide, other plastics, or other materials that are non-conducting and suitable for facilitating transmission of electromagnetic waves at least in part on an outer surface of such materials. In another embodiment, dielectric waveguide **502** can include a core that is conducting/metallic, and have an exterior dielectric surface. Similarly, a transmission medium that couples to the dielectric waveguide **502** for propagating electromagnetic waves induced by the dielectric waveguide **502** or for supplying electromagnetic waves to the dielectric waveguide **502** can be wholly constructed of a dielectric material (or another suitable insulating material), without any metallic or otherwise conducting materials therein.

It is noted that although FIG. **5**A shows that the opening of transmitter receiver device **506** is much wider than the dielectric waveguide **502**, this is not to scale, and that in other embodiments the width of the dielectric waveguide **502** is comparable or slightly smaller than the opening of the hollow waveguide. It is also not shown, but in an embodiment, an end of the waveguide **502** that is inserted into the transmitter/receiver device **506** tapers down in order to reduce reflection and increase coupling efficiencies.

The transmitter/receiver device **506** can be communicably coupled to a communications interface **501**, and alternatively, transmitter/receiver device **506** can also be communicably coupled to the one or more distributed antennas **112** and **114** shown in FIG. **1**. In other embodiments, transmitter receiver device **506** can comprise part of a repeater system for a backhaul network.

Before coupling to the dielectric waveguide **502**, the one or more waveguide modes of the guided wave generated by the transmitter/receiver device **506** can couple to the dielectric waveguide **502** to induce one or more wave propagation modes of the guided wave **504**. The wave propagation modes of the guided wave **504** can be different than the hollow metal waveguide modes due to the different characteristics of the hollow metal waveguide and the dielectric waveguide. For instance, wave propagation modes of the guide wave **504** can comprise the fundamental transverse electromagnetic mode (Quasi-TEM_{00}), where only small electrical and/or magnetic fields extend in the direction of propagation, and the electric and magnetic fields extend radially outwards from the dielectric waveguide **502** while the guided waves propagate along the dielectric waveguide **502**. The fundamental transverse electromagnetic mode wave propagation mode may not exist inside a waveguide that is hollow. Therefore, the hollow metal waveguide modes that are used by transmitter/receiver device **506** are waveguide modes that can couple effectively and efficiently to wave propagation modes of dielectric waveguide **502**.

Turning now to FIG. **6**, illustrated is a block diagram illustrating an example, non-limiting embodiment of a dual dielectric waveguide coupling system **600** in accordance with various aspects described herein. In an embodiment, two or more dielectric waveguides (e.g., **604** and **606**) can be positioned around a wire **602** in order to receive guided wave **608**. In an embodiment, the guided wave **608** can be characterized as a surface wave or other electromagnetic wave. In an embodiment, one dielectric waveguide is enough to receive the guided wave **608**. In that case, guided wave **608** couples to dielectric waveguide **604** and propagates as guided wave **610**. If the field structure of the guided wave **608** oscillates or undulates around the wire **602** due to various outside factors, then dielectric waveguide **606** can be placed such that guided wave **608** couples to dielectric waveguide **606**. In some embodiments, four or more dielectric waveguides can be placed around a portion of the wire **602**, e.g., at 90 degrees or another spacing with respect to each other, in order to receive guided waves that may oscillate or rotate around the wire **602**, that have been induced at different axial orientations or that have non-fundamental or higher order modes that, for example, have lobes and/or nulls or other asymmetries that are orientation dependent. However, it will be appreciated that there may be less than or more than four dielectric waveguides placed around a portion of the wire **602** without departing from example embodiments. It will also be appreciated that while some example embodiments have presented a plurality of dielectric waveguides around at least a portion of a wire **602**, this plurality of dielectric waveguides can also be considered as part of a single dielectric waveguide system having multiple dielectric waveguide subcomponents. For example, two or more dielectric waveguides can be manufactured as single system that can be installed around a wire in a single installation such that the dielectric waveguides are either pre-positioned or adjustable relative to each other (either manually or automatically) in accordance with the single system. Receivers coupled to dielectric waveguides **606** and **604** can use diversity combining to combine signals received from both dielectric waveguides **606** and **604** in order to maximize the signal quality. In other embodiments, if one or the other of a dielectric waveguides **604** and **606** receive a transmission that is above a predetermined threshold, receivers can use selection diversity when deciding which signal to use.

It is noted that the graphical representations of waves **608** and **610** are presented merely to illustrate the principles that guided wave **608** induces or otherwise launches a wave **610** on a dielectric waveguide **604**. The actual electric and magnetic fields generated as a result of such wave propagation may vary depending on the frequencies employed, the design of the dielectric waveguide **604**, the dimensions and composition of the wire **602**, as well as its surface characteristics, its optional insulation, the electromagnetic properties of the surrounding environment, etc.

Turning now to FIG. **7**, illustrated is a block diagram of an example, non-limiting embodiment of a bidirectional dielectric waveguide coupling system **700** in accordance with various aspects described herein. In system **700**, two dielectric waveguides **704** and **714** can be placed near a wire **702** such that guided waves (e.g., surface waves or other electromagnetic waves) propagating along the wire **702** are coupled to dielectric waveguide **704** as wave **706**, and then are boosted or repeated by repeater device **710** and launched as a guided wave **716** onto dielectric waveguide **714**. The guided wave **716** can then couple to wire **702** and continue to propagate along the wire **702**. In an embodiment, the repeater device **710** can receive at least a portion of the power utilized for boosting or repeating through magnetic coupling with the wire **702**, which can be a power line.

In some embodiments, repeater device **710** can repeat the transmission associated with wave **706**, and in other embodiments, repeater device **710** can be associated with a distributed antenna system and/or base station device located near the repeater device **710**. Receiver waveguide

708 can receive the wave 706 from the dielectric waveguide 704 and transmitter waveguide 712 can launch guided wave 716 onto dielectric waveguide 714. Between receiver waveguide 708 and transmitter waveguide 712, the signal can be amplified to correct for signal loss and other inefficiencies associated with guided wave communications or the signal can be received and processed to extract the data contained therein and regenerated for transmission. In an embodiment, a signal can be extracted from the transmission and processed and otherwise emitted to mobile devices nearby via distributed antennas communicably coupled to the repeater device 710. Similarly, signals and/or communications received by the distributed antennas can be inserted into the transmission that is generated and launched onto dielectric waveguide 714 by transmitter waveguide 712. Accordingly, the repeater system 700 depicted in FIG. 7 can be comparable in function to the dielectric waveguide coupling device 108 and 110 in FIG. 1.

It is noted that although FIG. 7 shows guided wave transmissions 706 and 716 entering from the left and exiting to the right respectively, this is merely a simplification and is not intended to be limiting. In other embodiments, receiver waveguide 708 and transmitter waveguide 712 can also function as transmitters and receivers respectively, allowing the repeater device 710 to be bi-directional.

In an embodiment, repeater device 710 can be placed at locations where there are discontinuities or obstacles on the wire 702. These obstacles can include transformers, connections, utility poles, and other such power line devices. The repeater device 710 can help the guided (e.g., surface) waves jump over these obstacles on the line and boost the transmission power at the same time. In other embodiments, a dielectric waveguide can be used to jump over the obstacle without the use of a repeater device. In that embodiment, both ends of the dielectric waveguide can be tied or fastened to the wire, thus providing a path for the guided wave to travel without being blocked by the obstacle.

Turning now to FIG. 8, illustrated is a block diagram of an example, non-limiting embodiment of a bidirectional dielectric waveguide coupler 800 in accordance with various aspects described herein. The bidirectional dielectric waveguide coupler 800 can employ diversity paths in the case of when two or more wires are strung between utility poles. Since guided wave transmissions have different transmission efficiencies and coupling efficiencies for insulated wires and un-insulated wires based on weather, precipitation and atmospheric conditions, it can be advantageous to selectively transmit on either an insulated wire or un-insulated wire at certain times.

In the embodiment shown in FIG.8, repeater device uses a receiver waveguide 808 to receive a guided wave traveling along uninsulated wire 802 and repeats the transmission using transmitter waveguide 810 as a guided wave along insulated wire 804. In other embodiments, repeater device can switch from the insulated wire 804 to the un-insulated wire 802, or can repeat the transmissions along the same paths. Repeater device 806 can include sensors, or be in communication with sensors that indicate conditions that can affect the transmission. Based on the feedback received from the sensors, the repeater device 806 can make the determination about whether to keep the transmission along the same wire, or transfer the transmission to the other wire.

Turning now to FIG. 9, illustrated is a block diagram illustrating an example, non-limiting embodiment of a bidirectional repeater system 900. Bidirectional repeater system 900 includes waveguide coupling devices 902 and 904 that receive and transmit transmissions from other coupling devices located in a distributed antenna system or backhaul system.

In various embodiments, waveguide coupling device 902 can receive a transmission from another waveguide coupling device, wherein the transmission has a plurality of subcarriers. Diplexer 906 can separate the transmission from other transmissions, and direct the transmission to low-noise amplifier ("LNA") 908. A frequency mixer 928, with help from a local oscillator 912, can downshift the transmission (which is in the millimeter-wave band or around 38 GHz in some embodiments) to a lower frequency, whether it is a cellular band (~1.9 GHz) for a distributed antenna system, a native frequency, or other frequency for a backhaul system. An extractor 932 can extract the signal on the subcarrier that corresponds to antenna or other output component 922 and direct the signal to the output component 922. For the signals that are not being extracted at this antenna location, extractor 932 can redirect them to another frequency mixer 936, where the signals are used to modulate a carrier wave generated by local oscillator 914. The carrier wave, with its subcarriers, is directed to a power amplifier ("PA") 916 and is retransmitted by waveguide coupling device 904 to another repeater system, via diplexer 920.

At the output device 922 (antenna in a distributed antenna system), a PA 924 can boost the signal for transmission to the mobile device. An LNA 926 can be used to amplify weak signals that are received from the mobile device and then send the signal to a multiplexer 934 which merges the signal with signals that have been received from waveguide coupling device 904. The signals received from coupling device 904 have been split by diplexer 920, and then passed through LNA 918, and downshifted in frequency by frequency mixer 938. When the signals are combined by multiplexer 934, they are upshifted in frequency by frequency mixer 930, and then boosted by PA 910, and transmitted back to the launcher or on to another repeater by waveguide coupling device 902. In an embodiment bidirectional repeater system 900 can be just a repeater without the antenna/output device 922. It will be appreciated that in some embodiments, a bidirectional repeater system 900 could also be implemented using two distinct and separate uni-directional repeaters. In an alternative embodiment, a bidirectional repeater system 900 could also be a booster or otherwise perform retransmissions without downshifting and upshifting. Indeed in example embodiment, the retransmissions can be based upon receiving a signal or guided wave and performing some signal or guided wave processing or reshaping, filtering, and/or amplification, prior to retransmission of the signal or guided wave.

Turning now to FIGS. 10A, 10B, and 10C, illustrated are block diagrams of example, non-limiting embodiments of a slotted waveguide coupler system 1000 in accordance with various aspects described herein. In FIG. 10A, the waveguide coupler system comprises a wire 1006 that is positioned with respect to a waveguide 1002, such that the wire 1006 fits within or near a slot formed in the waveguide 1002 that runs longitudinally with respect to the wire 1004. The opposing ends 1004*a* and 1004*b* of the waveguide 1002, and the waveguide 1002 itself, surrounds less than 180 degrees of the wire surface of the wire 1006.

In FIG. 10B the waveguide coupler system comprises a wire 1014 that is positioned with respect to a waveguide 1008, such that the wire 1014 fits within or near a slot formed in the waveguide 1008 that runs longitudinally with respect to the wire 1004. The slot surfaces of the waveguide 1008 can be non parallel, and two different exemplary

embodiments are shown in FIG. **10**B. In the first, slot surfaces **1010***b* and **1010***b* can be non parallel and aim outwards, slightly wider than the width of the wire **1014**. In the other embodiment, the slots surfaces **1012***a* and **1012***b* can still be non-parallel, but narrow to form a slot opening smaller than a width of the wire **1014**. Any range of angles of the non parallel slot surfaces are possible, of which these are two exemplary embodiments.

In FIG. **10**C, the waveguide coupler system shows a wire **1020** that fits within a slot formed in waveguide **1016**. The slot surfaces **1018***a* and **1018***b* in this exemplary embodiment can be parallel, but the axis **1026** of the wire **1020** is not aligned with the axis **1024** of the waveguide **1016**. The waveguide **1016** and the wire **1020** are therefore not coaxially aligned. In another embodiment, shown, a possible position of the wire at **1022** also has an axis **1028** that is not aligned with the axis **1024** of the waveguide **1016**.

It is to be appreciated that while three different embodiments showing a) waveguide surfaces that surround less than 180 degrees of the wire, b) non parallel slot surfaces, and c) coaxially unaligned wires and waveguide were shown separately in FIGS. **10**A, **10**B, and **10**C, in various embodiments, diverse combinations of the listed features are possible.

Turning now to FIG. **11**, illustrated is an example, non-limiting embodiment of a waveguide coupling system **1100** in accordance with various aspects described herein. FIG. **11** depicts a cross sectional representation of the waveguide and wire embodiments shown in FIGS. **2**, **3**, **4**, and etc. As can be seen in **1100**, the wire **1104** can be positioned directly next to and touching waveguide **1102**. In other embodiments, as shown in waveguide coupling system **1200** in FIG. **12**, the wire **1204** can still be placed near, but not actually touching waveguide strip **1202**. In both cases, electromagnetic waves traveling along the waveguides can induce other electromagnetic waves on to the wires and vice versa. Also, in both embodiments, the wires **1104** and **1204** are placed outside the cross-sectional area defined by the outer surfaces of waveguides **1102** and **1202**.

For the purposes of this disclosure, a waveguide does not surround, in substantial part, a wire surface of a wire when the waveguide does not surround an axial region of the surface, when viewed in cross-section, of more than 180 degrees. For avoidance of doubt, a waveguide does not surround, in substantial part a surface of a wire when the waveguide surrounds an axial region of the surface, when viewed in cross-section, of 180 degrees or less.

It is to be appreciated that while FIGS. **11** and **12** show wires **1104** and **1204** having a circular shape and waveguides **1102** and **1202** having rectangular shapes, this is not meant to be limiting. In other embodiments, wires and waveguides can have a variety of shapes, sizes, and configurations. The shapes can include, but not be limited to: ovals or other elliptoid shapes, octagons, quadrilaterals or other polygons with either sharp or rounded edges, or other shapes. Additionally, in some embodiments, the wires **1104** and **1204** can be stranded wires comprising smaller gauge wires, such as a helical strand, braid or other coupling of individual strands into a single wire. Any of wires and waveguides shown in the figures and described throughout this disclosure can include one or more of these embodiments.

FIG.**13** illustrates a process in connection with the aforementioned systems. The process in FIG.**13** can be implemented for example by systems **100**, **200**, **300**, **400**, **500**, **600**, **700**, **800**, and **900** illustrated in FIGS. **1**-**9** respectively. While for purposes of simplicity of explanation, the process is shown and described as a series of blocks, it is to be understood and appreciated that the claimed subject matter is not limited by the order of the blocks, as some blocks may occur in different orders and/or concurrently with other blocks from what is depicted and described herein. Moreover, not all illustrated blocks may be required to implement the methods described hereinafter.

FIG. **13** illustrates a flow diagram of an example, non-limiting embodiment of a method for transmitting a transmission with a dielectric waveguide coupler as described herein. Method **1300** can begin at **1302** where a first electromagnetic wave is emitted by a transmission device as a guided wave that propagates at least in part on a waveguide surface of a waveguide, wherein the waveguide surface of the waveguide does not surround in whole or in substantial part a wire surface of a wire. The transmission that is generated by a transmitter can be based on a signal received from a base station device, access point, network, a mobile device, or other signal source.

At **1304**, based upon configuring or positioning the waveguide in proximity of the wire, the guided wave then couples at least a part of the first electromagnetic wave to a wire surface, forming a second electromagnetic wave (e.g., a surface wave) that propagates at least partially around the wire surface, wherein the wire is in proximity to the waveguide. This can be done in response to positioning a portion of the dielectric waveguide (e.g., a tangent of a curve of the dielectric waveguide) near and parallel to the wire, wherein a wavelength of the electromagnetic wave is smaller than a circumference of the wire and the dielectric waveguide. The guided wave, or surface wave, stays parallel to the wire even as the wire bends and flexes. Bends can increase transmission losses, which are also dependent on wire diameters, frequency, and materials. The coupling interface between the wire and the waveguide can also be configured to achieve the desired level of coupling, as described herein, which can include tapering an end of the waveguide to improve impedance matching between the waveguide and the wire.

The transmission that is emitted by the transmitter can exhibit one or more waveguide modes. The waveguide modes can be dependent on the shape and/or design of the waveguide. The propagation modes on the wire can be different than the waveguide modes due to the different characteristics of the waveguide and the wire. When the circumference of the wire is comparable in size to, or greater, than a wavelength of the transmission, the guided wave exhibits multiple wave propagation modes. The guided wave can therefore comprise more than one type of electric and magnetic field configuration. As the guided wave (e.g., surface wave) propagates down the wire, the electrical and magnetic field configurations may remain substantially the same from end to end of the wire or vary as the transmission traverses the wave by rotation, dispersion, attenuation or other effects.

FIG. **14** is a block diagram illustrating an example, non-limiting embodiment of a waveguide system **1402** in accordance with various aspects described herein. The waveguide system **1402** can comprise sensors **1404**, a power management system **1405**, a waveguide **1406**, and a communications interface **1408**.

The waveguide system **1402** can be coupled to a power line **1410** for facilitating data communications in accordance with embodiments described in the subject disclosure. In an example embodiment, the waveguide **1406** can comprise all or part of the system **500**, such as shown in FIG. **5**, for inducing electromagnetic waves on a surface of the power

line **1410** that longitudinally propagate along the surface of the power line **1410** as described in the subject disclosure. Non-limiting techniques for coupling the waveguide **1406** to the power line **1410** are shown in FIGS. **2-4** and **6**. The waveguide **1406** can also serve as a repeater for retransmitting electromagnetic waves on the same power line **1410** or for routing electromagnetic waves between power lines **1410** as shown in FIGS. **7-8**.

The communications interface **1408** can comprise the communications interface **501** shown in FIG. **5**, in an example embodiment. The communications interface **1408** couples to the waveguide **1406** for up-converting signals operating at an original frequency to electromagnetic waves operating at a carrier frequency that propagate on a surface of a coupling device of the waveguide **1406**, such as the dielectric **502** of FIG. **5**, and that induce corresponding electromagnetic waves that propagate on a surface of the power line **1410**. The power line **1410** can be a wire (e.g., single stranded or multi-stranded) having a conducting surface or insulated surface. The communications interface **1408** can also receive signals from the waveguide **1406** that have been down-converted from electromagnetic waves operating at a carrier frequency to signals at their original frequency.

Signals received by the communications interface **1408** for up-conversion can include without limitation signals supplied by a central office **1411** over a wired or wireless interface of the communications interface **1408**, a base station **1414** over a wired or wireless interface of the communications interface **1408**, wireless signals transmitted by mobile devices **1420** to the base station **1414** for delivery over the wired or wireless interface of the communications interface **1408**, signals supplied by in-building communication devices **1418** over the wired or wireless interface of the communications interface **1408**, and/or wireless signals supplied to the communications interface **1408** by mobile devices **1412** roaming in a wireless communication range of the communications interface **1408**. In embodiments where the waveguide system **1402** functions as a repeater, such as shown in FIGS. **7-8**, the communications interface **1408** may not be included in the waveguide system **1402**.

The electromagnetic waves propagating along the surface of the power **1410** can be modulated and formatted to include packets or frames of data that include a data payload and further include networking information (such as header information for identifying one or more destination waveguide systems **1402**). The networking information may be provided by the waveguide system **1402** or an originating device such as the central office **1411**, the base station **1414**, mobile devices **1420**, or in-building devices **1418**, or a combination thereof. Additionally, the modulated electromagnetic waves can include error correction data for mitigating signal disturbances. The networking information and error correction data can be used by a destination waveguide system **1402** for detecting transmissions directed to it, and for down-converting and processing with error correction data transmissions that include voice and/or data signals directed to recipient communication devices communicatively coupled to the destination waveguide system **1402**.

Referring now to the sensors **1404** of the waveguide system **1402**, the sensors **1404** can comprise one or more of a temperature sensor **1404***a*, a disturbance detection sensor **1404***b*, a loss of energy sensor **1404***c*, a noise sensor **1404***d*, a vibration sensor **1404***e*, an environmental (e.g., weather) sensor **1404***f*, and/or an image sensor **1404***g*. The temperature sensor **1404***a* can be used to measure ambient temperature, a temperature of the waveguide **1406**, a temperature of the power line **1410**, temperature differentials (e.g., compared to a setpoint or baseline, between **1046** and **1410**, etc.), or any combination thereof. In one embodiment, temperature metrics can be collected and reported periodically to a network management system **1601** by way of the base station **1414**.

The disturbance detection sensor **1404***b* can perform measurements on the power line **1410** to detect disturbances such as signal reflections, which may indicate a presence of a downstream disturbance that may impede the propagation of electromagnetic waves on the power line **1410**. A signal reflection can represent a distortion resulting from, for example, an electromagnetic wave transmitted on the power line **1410** by the waveguide **1406** that reflects in whole or in part back to the waveguide **1406** from a disturbance in the power line **1410** located downstream from the waveguide **1406**.

Signal reflections can be caused by obstructions on the power line **1410**. For example, a tree limb shown in FIG. **15**(A) may cause electromagnetic wave reflections when the tree limb is lying on the power line **1410**, or is in close proximity to the power line **1410** which may cause a corona discharge **1502**. Other illustrations of obstructions that can cause electromagnetic wave reflections can include without limitation an object **1506** that has been entangled on the power line **1410** as shown in FIG. **15**(C) (e.g., clothing, a shoe wrapped around a power line **1410** with a shoe string, etc.), a corroded build-up **1512** on the power line **1410** as shown in FIG. **15**(F), or an ice build-up **1514** as shown in FIG. **15**(G). Power grid components may also interfere with the transmission of electromagnetic waves on the surface of power lines **1410**. Illustrations of power grid components that may cause signal reflections include without limitation a transformer **1504** illustrated in FIG. **15**(B) and a joint **1510** for connecting spliced power lines such as illustrated in FIG. **15**(E). A sharp angle **1508** on a power line **1410**, as shown in FIG. **15**(D), may also cause electromagnetic wave reflections.

The disturbance detection sensor **1404***b* can comprise a circuit to compare magnitudes of electromagnetic wave reflections to magnitudes of original electromagnetic waves transmitted by the waveguide **1406** to determine how much a downstream disturbance in the power line **1410** attenuates transmissions. The disturbance detection sensor **1404***b* can further comprise a spectral analyzer circuit for performing spectral analysis on the reflected waves. The spectral data generated by the spectral analyzer circuit can be compared with spectral profiles via pattern recognition, an expert system, curve fitting, matched filtering or other artificial intelligence, classification or comparison technique to identify a type of disturbance based on, for example, the spectral profile that most closely matches the spectral data. The spectral profiles can be stored in a memory of the disturbance detection sensor **1404***b* or may be remotely accessible by the disturbance detection sensor **1404***b*. The profiles can comprise spectral data that models different disturbances that may be encountered on power lines **1410** to enable the disturbance detection sensor **1404***b* to identify disturbances locally. An identification of the disturbance if known can be reported to the network management system **1601** by way of the base station **1414**.The disturbance detection sensor **1404***b* can also utilize the waveguide **1406** to transmit electromagnetic waves as test signals to determine a round-trip time for an electromagnetic wave reflection. The round trip time measured by the disturbance detection sensor **1404***b* can be used to calculate a distance traveled by the electromagnetic wave up to a point where the reflection

takes place, which enables the disturbance detection sensor **1404***b* to calculate a distance from the waveguide **1406** to the downstream disturbance on the power line **1410**.

The distance calculated can be reported to the network management system **1601** by way of the base station **1414**. In one embodiment, the location of the waveguide system **1402** on the power line **1410** may be known to the network management system **1601**, which the network management system **1601** can use to determine a location of the disturbance on the power line **1410** based on a known topology of the power grid. In another embodiment, the waveguide system **1402** can provide its location to the network management system **1601** to assist in the determination of the location of the disturbance on the power line **1410**. The location of the waveguide system **1402** can be obtained by the waveguide system **1402** from a pre-programmed location of the waveguide system **1402** stored in a memory of the waveguide system **1402**, or the waveguide system **1402** can determine its location using a GPS receiver (not shown) included in the waveguide system **1402**.

The power management system **1405** provides energy to the aforementioned components of the waveguide system **1402**. The power management system **1405** can receive energy from solar cells, or from a transformer (not shown) coupled to the power line **1410**, or by inductive coupling to the power line **1410** or another nearby power line. The power management system **1405** can also include a backup battery and/or a super capacitor or other capacitor circuit for providing the waveguide system **1402** with temporary power. The loss of energy sensor **1404***c* can be used to detect when the waveguide system **1402** has a loss of power condition and/or the occurrence of some other malfunction. For example, the loss of energy sensor **1404***c* can detect when there is a loss of power due to defective solar cells, an obstruction on the solar cells that causes them to malfunction, loss of power on the power line **1410**, and/or when the backup power system malfunctions due to expiration of a backup battery, or a detectable defect in a super capacitor. When a malfunction and/or loss of power occurs, the loss of energy sensor **1404***c* can notify the network management system **1601** by way of the base station **1414**.

The noise sensor **1404***d* can be used to measure noise on the power line **1410** that may adversely affect transmission of electromagnetic waves on the power line **1410**. The noise sensor **1404***d* can sense unexpected electromagnetic interference, noise bursts, or other sources of disturbances that may interrupt transmission of modulated electromagnetic waves on a surface of a power line **1410**. A noise burst can be caused by, for example, a corona discharge, or other source of noise. The noise sensor **1404***d* can compare the measured noise to a noise profile obtained by the waveguide system **1402** from an internal database of noise profiles or from a remotely located database that stores noise profiles via pattern recognition, an expert system, curve fitting, matched filtering or other artificial intelligence, classification or comparison technique. From the comparison, the noise sensor **1404***d* may identify a noise source (e.g., corona discharge or otherwise)based on, for example, the noise profile that provides the closest match to the measured noise. The noise sensor **1404***d* can also detect how noise affects transmissions by measuring transmission metrics such as bit error rate, packet loss rate, jitter, packet retransmission requests, etc. The noise sensor **1404***d* can report to the network management system **1601** by way of the base station **1414** the identity of noise sources, their time of occurrence, and transmission metrics, among other things.

The vibration sensor **1404***e* can include accelerometers and/or gyroscopes to detect 2D or 3D vibrations on the power line **1410**. The vibrations can be compared to vibration profiles that can be stored locally in the waveguide system **1402**, or obtained by the waveguide system **1402** from a remote database via pattern recognition, an expert system, curve fitting, matched filtering or other artificial intelligence, classification or comparison technique. Vibration profiles can be used, for example, to distinguish fallen trees from wind gusts based on, for example, the vibration profile that provides the closest match to the measured vibrations. The results of this analysis can be reported by the vibration sensor **1404***e* to the network management system **1601** by way of the base station **1414**.

The environmental sensor **1404***f* can include a barometer for measuring atmospheric pressure, ambient temperature (which can be provided by the temperature sensor **1404***a*), wind speed, humidity, wind direction, and rainfall, among other things. The environmental sensor **1404***f* can collect raw information and process this information by comparing it to environmental profiles that can be obtained from a memory of the waveguide system **1402** or a remote database to predict weather conditions before they arise via pattern recognition, an expert system, knowledge-based system or other artificial intelligence, classification or other weather modeling and prediction technique. The environmental sensor **1404***f* can report raw data as well as its analysis to the network management system **1601**.

The image sensor **1404***g* can be a digital camera (e.g., a charged coupled device or CCD imager, infrared camera, etc.) for capturing images in a vicinity of the waveguide system **1402**. The image sensor **1404***g* can include an electromechanical mechanism to control movement (e.g., actual position or focal points/zooms) of the camera for inspecting the power line **1410** from multiple perspectives (e.g., top surface, bottom surface, left surface, right surface and so on). Alternatively, the image sensor **1404***g* can be designed such that no electromechanical mechanism is needed in order to obtain the multiple perspectives. The collection and retrieval of imaging data generated by the image sensor **1404***g* can be controlled by the network management system **1601**, or can be autonomously collected and reported by the image sensor **1404***g* to the network management system **1601**.

Other sensors that may be suitable for collecting telemetry information associated with the waveguide system **1402** and/or the power lines **1410** for purposes of detecting, predicting and/or mitigating disturbances that can impede electromagnetic wave transmissions on power lines **1410** (or any other form of a transmission medium of electromagnetic waves) may be utilized by the waveguide system **1402**.

FIG. **16** is a block diagram illustrating an example, non-limiting embodiment of a system **1600** for managing a power grid **1603** and a communication system **1605** embedded therein in accordance with various aspects described herein. The communication system **1605** comprises a plurality of waveguide systems **1402** coupled to power lines **1410** of the power grid **1603**. At least a portion of the waveguide systems **1402** used in the communication system **1605** can be in direct communication with a base station **1414** and/or the network management system **1601**. Waveguide systems **1402** not directly connected to a base station **1414** or the network management system **1601** can engage in communication sessions with either a base station **1414** or the network management system **1601** by way of other downstream waveguide systems **1402** connected to a base station **1414** or the network management system **1601**. Such

communication sessions can include a voice communication session, a streaming video session or a data communication session.

The network management system **1601** can be communicatively coupled to equipment of a utility company **1602** and equipment of a communications service provider **1604** for providing each entity, status information associated with the power grid **1603** and the communication system **1605**, respectively. The network management system **1601**, the equipment of the utility company **1602**, and the communications service provider **1604** can access communication devices utilized by utility company personnel **1606** and/or communication devices utilized by communications service provider personnel **1608** for purposes of providing status information and/or for directing such personnel in the management of the power grid **1603** and/or communication system **1605**.

FIG. **17**A illustrates a flow diagram of an example, non-limiting embodiment of a method **1700** for detecting and mitigating disturbances occurring in a communication network of the system **1600** of FIG. **16**. Method **1700** can begin with step **1702** where a waveguide system **1402** transmits and receives messages embedded in, or forming part of, modulated electromagnetic waves or another type of electromagnetic waves traveling along a surface of a power line **1410**. The messages can be voice messages, streaming video, and/or other data/information exchanged between communication devices communicatively coupled to the communication system **1605**. At step **1704** the sensors **1404** of the waveguide system **1402** can collect sensing data. In an embodiment, the sensing data can be collected in step **1704** prior to, during, or after the transmission and/or receipt of messages in step **1702**. At step **1706** the waveguide system **1402** (or the sensors **1404** themselves) can determine from the sensing data an actual or predicted occurrence of a disturbance in the communication system **1605** that can affect communications originating from (e.g., transmitted by) or received by the waveguide system **1402**. The waveguide system **1402** (or the sensors **1404**) can process temperature data, signal reflection data, loss of energy data, noise data, vibration data, environmental data, or any combination thereof to make this determination. The waveguide system **1402** (or the sensors **1404**) may also detect, identify, estimate, or predict the source of the disturbance and/or its location in the communication system **1605**. If a disturbance is neither detected/identified nor predicted/estimated at step **1708**, the waveguide system **1402** can proceed to step **1702** where it continues to transmit and receive messages embedded in, or forming part of, modulated electromagnetic waves traveling along a surface of the power line **1410**.

If at step **1708** a disturbance is detected/identified or predicted/estimated to occur, the waveguide system **1402** proceeds to step **1710** to determine if the disturbance adversely affects (or alternatively, is likely to adversely affect or the extent to which it may adversely affect) transmission or reception of messages in the communication system **1605**. In one embodiment, a duration threshold and a frequency of occurrence threshold can be used at step **1710** to determine when a disturbance adversely affects communications in the communication system **1605**. For illustration purposes only, assume a duration threshold is set to 500 ms, while a frequency of occurrence threshold is set to 5 disturbances occurring in an observation period of 10 sec. Thus, a disturbance having a duration greater than 500 ms will trigger the duration threshold. Additionally, any disturbance occurring more than 5 times in a 10 sec time interval will trigger the frequency of occurrence threshold.

In one embodiment, a disturbance may be considered to adversely affect signal integrity in the communication systems **1605** when the duration threshold alone is exceeded. In another embodiment, a disturbance may be considered as adversely affecting signal integrity in the communication systems **1605** when both the duration threshold and the frequency of occurrence threshold are exceeded. The latter embodiment is thus more conservative than the former embodiment for classifying disturbances that adversely affect signal integrity in the communication system **1605**. It will be appreciated that many other algorithms and associated parameters and thresholds can be utilized for step **1710** in accordance with example embodiments.

Referring back to method **1700**, if at step **1710** the disturbance detected at step **1708** does not meet the condition for adversely affected communications (e.g., neither exceeds the duration threshold nor the frequency of occurrence threshold), the waveguide system **1402** may proceed to step **1702** and continue processing messages. For instance, if the disturbance detected in step **1708** has a duration of 1 ms with a single occurrence in a 10 sec time period, then neither threshold will be exceeded. Consequently, such a disturbance may be considered as having a nominal effect on signal integrity in the communication system **1605** and thus would not be flagged as a disturbance requiring mitigation. Although not flagged, the occurrence of the disturbance, its time of occurrence, its frequency of occurrence, spectral data, and/or other useful information, may be reported to the network management system **1601** as telemetry data for monitoring purposes.

Referring back to step **1710**, if on the other hand the disturbance satisfies the condition for adversely affected communications (e.g., exceeds either or both thresholds), the waveguide system **1402** can proceed to step **1712** and report the incident to the network management system **1601**. The report can include raw sensing data collected by the sensors **1404**, a description of the disturbance if known by the waveguide system **1402**, a time of occurrence of the disturbance, a frequency of occurrence of the disturbance, a location associated with the disturbance, parameters readings such as bit error rate, packet loss rate, retransmission requests, jitter, latency and so on. If the disturbance is based on a prediction by one or more sensors of the waveguide system **1402**, the report can include a type of disturbance expected, and if predictable, an expected time occurrence of the disturbance, and an expected frequency of occurrence of the predicted disturbance when the prediction is based on historical sensing data collected by the sensors **1404** of the waveguide system **1402**.

At step **1714**, the network management system **1601** can determine a mitigation, circumvention, or correction technique, which may include directing the waveguide system **1402** to reroute traffic to circumvent the disturbance if the location of the disturbance can be determined. In one embodiment, the waveguide system **1402** detecting the disturbance may direct a repeater **1802** such as the one shown in FIG. **18**A to connect the waveguide system **1402** from a primary power line **1804** affected by the disturbance to a secondary power line **1806** to enable the waveguide system **1402** to reroute traffic to a different transmission medium and avoid the disturbance **1801**. In an embodiment where the waveguide system **1402** is configured as a repeater, such as repeater **1802**, the waveguide system **1402** can itself perform the rerouting of traffic from the primary power line **1804** to the secondary power line **1806**. It is further noted that for bidirectional communications (e.g., full or half-duplex communications), the repeater **1802** can

be configured to reroute traffic from the secondary power line **1806** back to the primary power line **1804** for processing by the waveguide system **1402**.

In another embodiment, the waveguide system **1402** can redirect traffic by instructing a first repeater **1812** situated upstream of the disturbance and a second repeater **1814** situated downstream of the disturbance to redirect traffic from a primary power line **1804** temporarily to a secondary power line **1806** and back to the primary power line **1804** in a manner that avoids the disturbance **1801** as shown in FIG. **18**B. It is further noted that for bidirectional communications (e.g., full or half-duplex communications), the repeaters **1812** and **1814** can be configured to reroute traffic from the secondary power line **1806** back to the primary power line **1804**.

To avoid interrupting existing communication sessions occurring on a secondary power line **1806**, the network management system **1601** may direct the waveguide system **1402** (in the embodiments of FIGS. **18**A-**18**B) to instruct repeater(s) to utilize unused time slot(s) and/or frequency band(s) of the secondary power line **1806** for redirecting data and/or voice traffic away from the primary power line **1804** to circumvent the disturbance **1801**.

At step **1716**, while traffic is being rerouted to avoid the disturbance, the network management system **1601** can notify equipment of the utility company **1602** and/or equipment of the communications service provider **1604**, which in turn may notify personnel of the utility company **1606** and/or personnel of the communications service provider **1608** of the detected disturbance and its location if known. Field personnel from either party can attend to resolving the disturbance at a determined location of the disturbance. Once the disturbance is removed or otherwise mitigated by personnel of the utility company and/or personnel of the communications service provider, such personnel can notify their respective companies and/or the network management system **1601** utilizing field equipment (e.g., a laptop computer, smartphone, etc.) communicatively coupled to network management system **1601**, and/or equipment of the utility company and/or the communications service provider. The notification can include a description of how the disturbance was mitigated and any changes to the power lines **1410** that may change a topology of the communication system **1605**.

Once the disturbance has been resolved, the network management system **1601** can direct the waveguide system **1402** at step **1720** to restore the previous routing configuration used by the waveguide system **1402** or route traffic according to a new routing configuration if the restoration strategy used to mitigate the disturbance resulted in a new network topology of the communication system **1605**. In another embodiment, the waveguide system **1402** can be configured to monitor mitigation of the disturbance by transmitting test signals on the power line **1410** to determine when the disturbance has been removed. Once the waveguide **1402** detects an absence of the disturbance it can autonomously restore its routing configuration without assistance by the network management system **1601** if it determines the network topology of the communication system **1605** has not changed, or it can utilize a new routing configuration that adapts to a detected new network topology.

FIG. **17**B illustrates a flow diagram of an example, non-limiting embodiment of a method **1750** for detecting and mitigating disturbances occurring in a communication network of the system **1600** of FIG. **16**. In one embodiment, method **1750** can begin with step **1752** where a network management system **1601** receives from equipment of the utility company **1602** or equipment of the communications service provider **1604** maintenance information associated with a maintenance schedule. The network management system **1601** can at step **1754** identify from the maintenance information, maintenance activities to be performed during the maintenance schedule. From these activities, the network management system **1601** can detect a disturbance resulting from the maintenance (e.g., scheduled replacement of a power line **1410**, scheduled replacement of a waveguide system **1402** on the power line **1410**, scheduled reconfiguration of power lines **1410** in the power grid **1603**, etc.).

In another embodiment, the network management system **1601** can receive at step **1755** telemetry information from one or more waveguide systems **1402**. The telemetry information can include among other things an identity of each waveguide system **1402** submitting the telemetry information, measurements taken by sensors **1404** of each waveguide system **1402**, information relating to predicted, estimated, or actual disturbances detected by the sensors **1404** of each waveguide system **1402**, location information associated with each waveguide system **1402**, an estimated location of a detected disturbance, an identification of the disturbance, and so on. The network management system **1601** can determine from the telemetry information a type of disturbance that may be adverse to operations of the waveguide, transmission of the electromagnetic waves along the wire surface, or both. The network management system **1601** can also use telemetry information from multiple waveguide systems **1402** to isolate and identify the disturbance. Additionally, the network management system **1601** can request telemetry information from waveguide systems **1402** in a vicinity of an affected waveguide system **1402** to triangulate a location of the disturbance and/or validate an identification of the disturbance by receiving similar telemetry information from other waveguide systems **1402**.

In yet another embodiment, the network management system **1601** can receive at step **1756** an unscheduled activity report from maintenance field personnel. Unscheduled maintenance may occur as result of field calls that are unplanned or as a result of unexpected field issues discovered during field calls or scheduled maintenance activities. The activity report can identify changes to a topology configuration of the power grid **1603** resulting from field personnel addressing discovered issues in the communication system **1605** and/or power grid **1603**, changes to one or more waveguide systems **1402** (such as replacement or repair thereof), mitigation of disturbances performed if any, and so on.

At step **1758**, the network management system **1601** can determine from reports received according to steps **1752** through **1756** if a disturbance will occur based on a maintenance schedule, or if a disturbance has occurred or is predicted to occur based on telemetry data, or if a disturbance has occurred due to an unplanned maintenance identified in a field activity report. From any of these reports, the network management system **1601** can determine whether a detected or predicted disturbance requires rerouting of traffic by the affected waveguide systems **1402** or other waveguide systems **1402** of the communication system **1605**.

When a disturbance is detected or predicted at step **1758**, the network management system **1601** can proceed to step **1760** where it can direct one or more waveguide systems **1402** to reroute traffic to circumvent the disturbance similar to the illustrations of FIG. **18**A or **18**B. When the disturbance is permanent due to a permanent topology change of the power grid **1603**, the network management system **1601**

can proceed to step **1770** and skip steps **1762**, **1764**, **1766**, and **1772**. At step **1770**, the network management system **1601** can direct one or more waveguide systems **1402** to use a new routing configuration that adapts to the new topology. However, when the disturbance has been detected from telemetry information supplied by one or more waveguide systems **1402**, the network management system **1601** can notify maintenance personnel of the utility company **1606** or the communications service provider **1608** of a location of the disturbance, a type of disturbance if known, and related information that may be helpful to such personnel to mitigate the disturbance. When a disturbance is expected due to maintenance activities, the network management system **1601** can direct one or more waveguide systems **1402** to reconfigure traffic routes at a given schedule (consistent with the maintenance schedule) to avoid disturbances caused by the maintenance activities during the maintenance schedule.

Returning back step **1760** and upon its completion, the process can continue with step **1762**. At step **1762**, the network management system **1601** can monitor when the disturbance(s) have been mitigated by field personnel. Mitigation of a disturbance can be detected at step **1762** by analyzing field reports submitted to the network management system **1601** by field personnel over a communications network (e.g., cellular communication system) utilizing field equipment (e.g., a laptop computer or handheld computer/device). If field personnel have reported that a disturbance has been mitigated, the network management system **1601** can proceed to step **1764** to determine from the field report whether a topology change was required to mitigate the disturbance. A topology change can include rerouting a power line **1410**, reconfiguring a waveguide system **1402** to utilize a different power line **1410**, otherwise utilizing an alternative link to bypass the disturbance and so on. If a topology change has taken place, the network management system **1601** can direct at step **1770** one or more waveguide systems **1402** to use a new routing configuration that adapts to the new topology.

If, however, a topology change has not been reported by field personnel, the network management system **1601** can proceed to step **1766** where it can direct one or more waveguide systems **1402** to send test signals to test a routing configuration that had been used prior to the detected disturbance(s). Test signals can be sent to affected waveguide systems **1402** in a vicinity of the disturbance. The test signals can be used to determine if signal disturbances (e.g., electromagnetic wave reflections) are detected by any of the waveguide systems **1402**. If the test signals confirm that a prior routing configuration is no longer subject to previously detected disturbance(s), then the network management system **1601** can at step **1772** direct the affected waveguide systems **1402** to restore a previous routing configuration. If, however, test signals analyzed by one or more waveguide systems **1402** and reported to the network management system **1601** indicate that the disturbance(s) or new disturbance(s) are present, then the network management system **1601** will proceed to step **1768** and report this information to field personnel to further address field issues. The network management system **1601** can in this situation continue to monitor mitigation of the disturbance(s) at step **1762**.

In the aforementioned embodiments, the waveguide systems **1402** can be configured to be self-adapting to changes in the power grid **1603** and/or to mitigation of disturbances. That is, one or more affected waveguide systems **1402** can be configured to self monitor mitigation of disturbances and reconfigure traffic routes without requiring instructions to be sent to them by the network management system **1601**. In this embodiment, the one or more waveguide systems **1402** that are self-configurable can inform the network management system **1601** of its routing choices so that the network management system **1601** can maintain a macro-level view of the communication topology of the communication system **1605**.

While for purposes of simplicity of explanation, the respective processes are shown and described as a series of blocks in FIGS. **17**A and **17**B, respectively, it is to be understood and appreciated that the claimed subject matter is not limited by the order of the blocks, as some blocks may occur in different orders and/or concurrently with other blocks from what is depicted and described herein. Moreover, not all illustrated blocks may be required to implement the methods described herein.

FIG. **19** illustrates a flow diagram of an example, non-limiting embodiment of a method **1900** for providing communication services. Method **1900** can be implemented by a processor (e.g., a microprocessor or circuit) such as the illustrative processor of the waveguide system **1402** of FIG. **14** that executes instructions stored in a memory for performing the steps of method **1900**. Method **1900** can begin with step **1902** where the waveguide system **1402** generates a signal comprising control information and data. Data in the present context can come from voice services, real-time data services (e.g., streaming video), non-real-time data services (e.g., Internet browsing), location information, telemetry information, or other sources of data. In one embodiment, the control information can comprise networking information for directing data to other waveguide systems **1402** and/or recipient devices served by the other waveguide systems **1402**.

In one embodiment, the control information and data can be transmitted by the waveguide system **1402** in one or more control channels and one or more transmission bands included in electromagnetic wave signals generated by the waveguide system **1402**—see illustration in FIG. **20**. In one embodiment, the control information can further identify sub-bands or sub-channels for transporting portions of the data directed to other waveguide systems **1402** and/or recipient devices served by the other waveguide systems **1402**. In addition to networking information (e.g., IP source and destination addresses or other network source and destination addresses), the control information can include information descriptive of a chosen modulation scheme for sending data, time slot assignments, carrier frequencies used, error correction schemes being used, and so on. Control information can thus represent different forms of signaling information for managing the transmission of data from the waveguide system **1402** to other waveguide systems **1402** and/or recipient devices served by the other waveguide systems **1402**. Frequency division, time division, or spread spectrum techniques can be used by the waveguide system **1402** for transmitting information in the channels and band and/or sub-bands of the electromagnetic wave signals for multiple access and/or for duplexing application. Other modulation techniques suitable for transmitting information by the waveguide system **1402** can be used.

At step **1904**, the waveguide system **1402** can modulate the signal generated in step **1902** to generate first electromagnetic waves that utilize a first control channel and at least one of a first plurality of bands. This step can be performed by a transmitter portion of a transceiver used by the waveguide system **1402** such as, for example, transceiver **503** shown in FIG. **5**. At step **1906**, the first electromagnetic waves can propagate on an outer surface of the waveguide **1406**, which in turn induces second electromag-

netic waves that propagate on an outer surface of a transmission medium (such as the power line **1410** of FIG. **14**). The first electromagnetic waves can have a first propagation mode, while the second electromagnetic waves can have a second propagation mode.

In one embodiment, the first propagation mode can be exclusively symmetric (fundamental mode) electromagnetic waves that induce second electromagnetic waves having a second propagation mode which includes symmetric (fundamental mode) electromagnetic waves combined with asymmetric (non-fundamental mode) electromagnetic waves. In this embodiment, the first and second propagation modes differ. In other embodiments, the first and second propagation modes can be the same. For example, the first and second propagation modes can comprise a combination of fundamental and non-fundamental electromagnetic waves. In another example, the first and the second propagation modes can comprise exclusively fundamental electromagnetic waves. Additionally, an operating (or carrier) frequency of the electromagnetic waves in the first and second propagation modes can be the same or different.

The first control channel can comprise the control information referred to at step **1902**. One or more sub-bands or sub-channels in the at least one band of the first plurality of bands can include portions of the data generated in step **1902**. As illustrated in the spectral diagrams of FIG. **20**, there can be multiple control channels and multiple bands in the uplink. A first control channel referred to at step **1904** can represent one of the control channels shown in FIG. **20**, which is accompanied by one or more bands. Each band shown in FIG. **20** can be composed of sub-bands or sub-channels. Any spectral arrangement can be used at a given bandwidth of an electromagnetic wave signal. For example, at millimeter wavelengths, an uplink can have 5 GHz bands with a control channel between pairs of bands. Each 5 GHz band can be composed of sub-bands or channels which can be of any desirable bandwidth (e.g., 1000 instances of 5 MHz channels).

Referring back to method **1900**, at step **1912**, the waveguide system **1402** can receive fourth electromagnetic waves, via waveguide **1406**. The fourth electromagnetic waves can be induced by third electromagnetic waves propagating on an outer surface of the power line **1410**. A receiver portion of the transceiver **503** shown in FIG. **5** can be used to selectively obtain at step **1914** a second control channel and at least one band from the fourth electromagnetic waves. At step **1916**, the processor of the waveguide **1402** can retrieve control information from the second control channel and data from the at least one band obtained at step **1914**. FIG. **20** illustrates the downlink.

The third electromagnetic waves propagating on the power line **1410** can have a first propagation mode, while the fourth electromagnetic waves propagating on the waveguide **1406** can have a second propagation mode. In one embodiment, the first propagation mode can be exclusively symmetric (fundamental mode) electromagnetic waves that induce fourth electromagnetic waves having a second propagation mode which includes symmetric (fundamental mode) electromagnetic waves combined with asymmetric (non-fundamental mode) electromagnetic waves. In this embodiment, the first and second propagation modes differ.

In other embodiments, the first and second propagation modes can be the same. For example, the first and second propagation modes can comprise a combination of fundamental and non-fundamental mode electromagnetic waves. In another example, the first and the second propagation modes can comprise exclusively fundamental electromagnetic waves. It is also noted that the propagation modes for transmitting electromagnetic waves via the waveguide system **1402** may differ from the propagation modes of electromagnetic waves received by the waveguide system **1402**. Additionally, an operating (or carrier) frequency of transmitted or received electromagnetic waves in the first and second propagation modes can be the same or different.

Referring back to FIG. **20**, in one embodiment, the uplink and downlink can be separated by a guard band to prevent interference. While not specifically shown, guard bands can be inserted between channels or sub-bands for similar purposes. In one embodiment, the uplink can have an equal number of control channels and bands as the downlink. In one embodiment, the spectral assignments for the uplink and downlink can be symmetric such that the communications bandwidth is equal. In another embodiment, the uplink and downlink can have asymmetric spectral assignments such that one link may have more communications bandwidth than the other. Additionally, the bandwidth of the bands in the uplink and the downlink can differ from each other. For illustration purposes only, the control channels and the bands and their corresponding sub-bands of the downlink and uplink are shown to be symmetric. In addition, while the uplink and downlink bands are shown as being divided into contiguous channels, one or more non-contiguous channels or frequency ranges can be combined to make up either the uplink spectrum or the downlink spectrum. Further, while channels are shown as being of the same spectral width, unequal channel sizes can be utilized for spectral efficiency in the presence of different kinds of traffic such as: real-time verses non-real-time, legacy versus non-legacy, video versus other kinds of streaming or non-streaming traffic, etc.

In the spectral configuration of FIG. **20**, a waveguide system **1402** can perform full-duplex communications with other waveguide systems and/or the recipient devices served by the other waveguide systems. In other embodiments, the spectral configuration of FIG. **20** can be adapted for half-duplex or simplex communications. It is further appreciated that other spectral arrangements are possible. For example, the waveguide system **1402** can be configured to modulate electromagnetic wave signals according to ultra wideband techniques involving bandwidths greater than 500 MHz and at a power level that falls below power limits set by the Federal Communications Commission (FCC) for ultra-wideband rules promulgated by the FCC. In this arrangement, electromagnetic waves transmitted and received by waveguide systems **1402** over a transmission medium may be treated as unlicensed spectrum.

It is further noted that signals from other communication systems, such as LTE or Voice over LTE (VoLTE) signals from a cellular communication system or signals from a media communication system such as a cable TV system or broadcast TV system, can be embedded in the bands or sub-bands shown in FIG. **20**. Accordingly, signals or data transported by the downlink or uplink shown in FIG. **20** can originate from any source of real-time and non-real-time content.

It is further noted that inter-carrier communications can be achieved by the spectral arrangement of FIG. **20**. For example, service providers can each be exclusively assigned different control channels and/or different bands or sub-bands. Accordingly, a transmission medium such as a power line can be shared by multiple service providers offering communication services to its subscribers.

While for purposes of simplicity of explanation, the respective processes are shown and described as a series of blocks in FIG. **19**, it is to be understood and appreciated that

the claimed subject matter is not limited by the order of the blocks, as some blocks may occur in different orders and/or concurrently with other blocks from what is depicted and described herein. Moreover, not all illustrated blocks may be required to implement the methods described herein. It is further noted that the embodiments of method **1900** can be adapted for use with any of the embodiments of the subject disclosure including without limitation embodiments relating to waveguide systems, waveguides, couplers, repeaters, sensors, and so on.

Referring now to FIG. **21**, there is illustrated a block diagram of a computing environment in accordance with various aspects described herein. In order to provide additional context for various embodiments of the embodiments described herein, FIG. **21** and the following discussion are intended to provide a brief, general description of a suitable computing environment **2100** in which the various embodiments of the subject disclosure can be implemented. While the embodiments have been described above in the general context of computer-executable instructions that can run on one or more computers, those skilled in the art will recognize that the embodiments can be also implemented in combination with other program modules and/or as a combination of hardware and software.

Generally, program modules comprise routines, programs, components, data structures, etc., that perform particular tasks or implement particular abstract data types. Moreover, those skilled in the art will appreciate that the inventive methods can be practiced with other computer system configurations, comprising single-processor or multiprocessor computer systems, minicomputers, mainframe computers, as well as personal computers, hand-held computing devices, microprocessor-based or programmable consumer electronics, and the like, each of which can be operatively coupled to one or more associated devices.

The terms "first," "second," "third," and so forth, as used in the claims, unless otherwise clear by context, is for clarity only and doesn't otherwise indicate or imply any order in time. For instance, "a first determination," "a second determination," and "a third determination," does not indicate or imply that the first determination is to be made before the second determination, or vice versa, etc.

The illustrated embodiments of the embodiments herein can be also practiced in distributed computing environments where certain tasks are performed by remote processing devices that are linked through a communications network. In a distributed computing environment, program modules can be located in both local and remote memory storage devices.

Computing devices typically comprise a variety of media, which can comprise computer-readable storage media and/or communications media, which two terms are used herein differently from one another as follows. Computer-readable storage media can be any available storage media that can be accessed by the computer and comprises both volatile and nonvolatile media, removable and non-removable media. By way of example, and not limitation, computer-readable storage media can be implemented in connection with any method or technology for storage of information such as computer-readable instructions, program modules, structured data or unstructured data.

Computer-readable storage media can comprise, but are not limited to, random access memory (RAM), read only memory (ROM), electrically erasable programmable read only memory (EEPROM),flash memory or other memory technology, compact disk read only memory (CD-ROM), digital versatile disk (DVD) or other optical disk storage, magnetic cassettes, magnetic tape, magnetic disk storage or other magnetic storage devices or other tangible and/or non-transitory media which can be used to store desired information. In this regard, the terms "tangible" or "non-transitory" herein as applied to storage, memory or computer-readable media, are to be understood to exclude only propagating transitory signals per se as modifiers and do not relinquish rights to all standard storage, memory or computer-readable media that are not only propagating transitory signals per se.

Computer-readable storage media can be accessed by one or more local or remote computing devices, e.g., via access requests, queries or other data retrieval protocols, for a variety of operations with respect to the information stored by the medium.

Communications media typically embody computer-readable instructions, data structures, program modules or other structured or unstructured data in a data signal such as a modulated data signal, e.g., a carrier wave or other transport mechanism, and comprises any information delivery or transport media. The term "modulated data signal" or signals refers to a signal that has one or more of its characteristics set or changed in such a manner as to encode information in one or more signals. By way of example, and not limitation, communication media comprise wired media, such as a wired network or direct-wired connection, and wireless media such as acoustic, RF, infrared and other wireless media.

With reference again to FIG. **21**, the example environment **2100** for transmitting and receiving signals via or forming at least part of a base station (e.g., base station devices **102**, **104**, or **520**) or central office (e.g., central office **101**, **1411**, or **2000**). At least a portion of the example environment **2100** can also be used for repeater devices (e.g., repeater devices **710**, or **806**). The example environment can comprise a computer **2102**, the computer **2102** comprising a processing unit **2104**, a system memory **2106** and a system bus **2108**. The system bus **2108** couples system components including, but not limited to, the system memory **2106** to the processing unit **2104**. The processing unit **2104** can be any of various commercially available processors. Dual microprocessors and other multi-processor architectures can also be employed as the processing unit **2104**.

The system bus **2108** can be any of several types of bus structure that can further interconnect to a memory bus (with or without a memory controller), a peripheral bus, and a local bus using any of a variety of commercially available bus architectures. The system memory **2106** comprises ROM **2110** and RAM **2112**. A basic input/output system (BIOS) can be stored in a non-volatile memory such as ROM, erasable programmable read only memory (EPROM), EEPROM, which BIOS contains the basic routines that help to transfer information between elements within the computer **2102**, such as during startup. The RAM **2112** can also comprise a high-speed RAM such as static RAM for caching data.

The computer **2102** further comprises an internal hard disk drive (HDD) **2114** (e.g., EIDE, SATA), which internal hard disk drive **2114** can also be configured for external use in a suitable chassis (not shown), a magnetic floppy disk drive (FDD) **2116**, (e.g., to read from or write to a removable diskette **2118**) and an optical disk drive **2120**, (e.g., reading a CD-ROM disk **2122** or, to read from or write to other high capacity optical media such as the DVD). The hard disk drive **2114**, magnetic disk drive **2116** and optical disk drive **2120** can be connected to the system bus **2108** by a hard disk drive interface **2124**, a magnetic disk drive interface **2126**

and an optical drive interface **2128**, respectively. The interface **2124** for external drive implementations comprises at least one or both of Universal Serial Bus (USB) and Institute of Electrical and Electronics

Engineers (IEEE) **1394** interface technologies. Other external drive connection technologies are within contemplation of the embodiments described herein.

The drives and their associated computer-readable storage media provide nonvolatile storage of data, data structures, computer-executable instructions, and so forth. For the computer **2102**, the drives and storage media accommodate the storage of any data in a suitable digital format. Although the description of computer-readable storage media above refers to a hard disk drive (HDD), a removable magnetic diskette, and a removable optical media such as a CD or DVD, it should be appreciated by those skilled in the art that other types of storage media which are readable by a computer, such as zip drives, magnetic cassettes, flash memory cards, cartridges, and the like, can also be used in the example operating environment, and further, that any such storage media can contain computer-executable instructions for performing the methods described herein.

A number of program modules can be stored in the drives and RAM **2112**, comprising an operating system **2130**, one or more application programs **2132**, other program modules **2134** and program data **2136**. All or portions of the operating system, applications, modules, and/or data can also be cached in the RAM **2112**. The systems and methods described herein can be implemented utilizing various commercially available operating systems or combinations of operating systems. Examples of application programs **2132** that can be implemented and otherwise executed by processing unit **2104** include the diversity selection determining performed by repeater device **806**. Base station device **508** shown in FIG. **5**, also has stored on memory many applications and programs that can be executed by processing unit **2104** in this exemplary computing environment **2100**.

A user can enter commands and information into the computer **2102** through one or more wired/wireless input devices, e.g., a keyboard **2138** and a pointing device, such as a mouse **2140**. Other input devices (not shown) can comprise a microphone, an infrared (IR) remote control, a joystick, a game pad, a stylus pen, touch screen or the like. These and other input devices are often connected to the processing unit **2104** through an input device interface **2142** that can be coupled to the system bus **2108**, but can be connected by other interfaces, such as a parallel port, an IEEE **1394** serial port, a game port, a universal serial bus (USB) port, an IR interface, etc.

A monitor **2144** or other type of display device can be also connected to the system bus **2108** via an interface, such as a video adapter **2146**. It will also be appreciated that in alternative embodiments, a monitor **2144** can also be any display device (e.g., another computer having a display, a smart phone, a tablet computer, etc.) for receiving display information associated with computer **2102** via any communication means, including via the Internet and cloud-based networks. In addition to the monitor **2144**, a computer typically comprises other peripheral output devices (not shown), such as speakers, printers, etc.

The computer **2102** can operate in a networked environment using logical connections via wired and/or wireless communications to one or more remote computers, such as a remote computer(s) **2148**. The remote computer(s) **2148** can be a workstation, a server computer, a router, a personal computer, portable computer, microprocessor-based entertainment appliance, a peer device or other common network node, and typically comprises many or all of the elements described relative to the computer **2102**, although, for purposes of brevity, only a memory/storage device **2150** is illustrated. The logical connections depicted comprise wired/wireless connectivity to a local area network (LAN) **2152** and/or larger networks, e.g., a wide area network (WAN) **2154**. Such LAN and WAN networking environments are commonplace in offices and companies, and facilitate enterprise-wide computer networks, such as intranets, all of which can connect to a global communications network, e.g., the Internet.

When used in a LAN networking environment, the computer **2102** can be connected to the local network **2152** through a wired and/or wireless communication network interface or adapter **2156**. The adapter **2156** can facilitate wired or wireless communication to the LAN **2152**, which can also comprise a wireless AP disposed thereon for communicating with the wireless adapter **2156**.

When used in a WAN networking environment, the computer **2102** can comprise a modem **2158** or can be connected to a communications server on the WAN **2154** or has other means for establishing communications over the WAN **2154**, such as by way of the Internet. The modem **2158**, which can be internal or external and a wired or wireless device, can be connected to the system bus **2108** via the input device interface **2142**. In a networked environment, program modules depicted relative to the computer **2102** or portions thereof, can be stored in the remote memory/storage device **2150**. It will be appreciated that the network connections shown are example and other means of establishing a communications link between the computers can be used.

The computer **2102** can be operable to communicate with any wireless devices or entities operatively disposed in wireless communication, e.g., a printer, scanner, desktop and/or portable computer, portable data assistant, communications satellite, any piece of equipment or location associated with a wireles sly detectable tag (e.g., a kiosk, news stand, restroom), and telephone. This can comprise Wireless Fidelity (Wi-Fi) and BLUETOOTH® wireless technologies. Thus, the communication can be a predefined structure as with a conventional network or simply an ad hoc communication between at least two devices.

Wi-Fi can allow connection to the Internet from a couch at home, a bed in a hotel room or a conference room at work, without wires. Wi-Fi is a wireless technology similar to that used in a cell phone that enables such devices, e.g., computers, to send and receive data indoors and out; anywhere within the range of a base station. Wi-Fi networks use radio technologies called IEEE 802.11 (a, b, g, n, ac, etc.) to provide secure, reliable, fast wireless connectivity. A Wi-Fi network can be used to connect computers to each other, to the Internet, and to wired networks (which can use IEEE 802.3 or Ethernet). Wi-Fi networks operate in the unlicensed 2.4 and 5 GHz radio bands for example or with products that contain both bands (dual band), so the networks can provide real-world performance similar to the basic 10BaseT wired Ethernet networks used in many offices.

FIG. **22** presents an example embodiment **2200** of a mobile network platform **2210** that can implement and exploit one or more aspects of the disclosed subject matter described herein. In one or more embodiments, the mobile network platform **2210** can generate and receive signals transmitted and received by base stations (e.g., base station devices **102**, **104** or **520**), central office (e.g., central office **101**, **1411**, or **2000**),or repeater devices (e.g., repeater devices **710**, or **806**) associated with the disclosed subject

matter. Generally, wireless network platform **2210** can comprise components, e.g., nodes, gateways, interfaces, servers, or disparate platforms, that facilitate both packet-switched (PS) (e.g., internet protocol (IP), frame relay, asynchronous transfer mode (ATM)) and circuit-switched (CS) traffic (e.g., voice and data), as well as control generation for networked wireless telecommunication. As a non-limiting example, wireless network platform **2210** can be included in telecommunications carrier networks, and can be considered carrier-side components as discussed elsewhere herein. Mobile network platform **2210** comprises CS gateway node(s) **2212** which can interface CS traffic received from legacy networks like telephony network(s) **2240** (e.g., public switched telephone network (PSTN), or public land mobile network (PLMN)) or a signaling system #7 (SS7) network **2270**. Circuit switched gateway node(s) **2212** can authorize and authenticate traffic (e.g., voice) arising from such networks. Additionally, CS gateway node(s) **2212** can access mobility, or roaming, data generated through SS7 network **2270**; for instance, mobility data stored in a visited location register (VLR), which can reside in memory **2230**. Moreover, CS gateway node(s) **2212** interfaces CS-based traffic and signaling and PS gateway node(s) **2218**. As an example, in a 3GPP UMTS network, CS gateway node(s) **2212** can be realized at least in part in gateway GPRS support node(s) (GGSN). It should be appreciated that functionality and specific operation of CS gateway node(s) **2212**, PS gateway node(s) **2218**, and serving node(s) **2216**, is provided and dictated by radio technology(ies) utilized by mobile network platform **2210** for telecommunication.

In addition to receiving and processing CS-switched traffic and signaling, PS gateway node(s) **2218** can authorize and authenticate PS-based data sessions with served mobile devices. Data sessions can comprise traffic, or content(s), exchanged with networks external to the wireless network platform **2210**, like wide area network(s) (WANs) **2250**, enterprise network(s) **2270**, and service network(s) **2280**, which can be embodied in local area network(s) (LANs), can also be interfaced with mobile network platform **2210** through PS gateway node(s) **2218**. It is to be noted that WANs **2250** and enterprise network(s) **2260** can embody, at least in part, a service network(s) like IP multimedia subsystem (IMS). Based on radio technology layer(s) available in technology resource(s) **2217**, packet-switched gateway node(s) **2218** can generate packet data protocol contexts when a data session is established; other data structures that facilitate routing of packetized data also can be generated. To that end, in an aspect, PS gateway node(s) **2218** can comprise a tunnel interface (e.g., tunnel termination gateway (TTG) in 3GPP UMTS network(s) (not shown)) which can facilitate packetized communication with disparate wireless network(s), such as Wi-Fi networks.

In embodiment **2200**, wireless network platform **2210** also comprises serving node(s) **2216** that, based upon available radio technology layer(s) within technology resource(s) **2217**, convey the various packetized flows of data streams received through PS gateway node(s) **2218**. It is to be noted that for technology resource(s) **2217** that rely primarily on CS communication, server node(s) can deliver traffic without reliance on PS gateway node(s) **2218**; for example, server node(s) can embody at least in part a mobile switching center. As an example, in a 3GPP UMTS network, serving node(s) **2216** can be embodied in serving GPRS support node(s) (SGSN).

For radio technologies that exploit packetized communication, server(s) **2214** in wireless network platform **2210** can execute numerous applications that can generate multiple disparate packetized data streams or flows, and manage (e.g., schedule, queue, format . . .) such flows. Such application(s) can comprise add-on features to standard services (for example, provisioning, billing, customer support . . .) provided by wireless network platform **2210**. Data streams (e.g., content(s) that are part of a voice call or data session) can be conveyed to PS gateway node(s) **2218** for authorization/authentication and initiation of a data session, and to serving node(s) **2216** for communication thereafter. In addition to application server, server(s) **2214** can comprise utility server(s), a utility server can comprise a provisioning server, an operations and maintenance server, a security server that can implement at least in part a certificate authority and firewalls as well as other security mechanisms, and the like. In an aspect, security server(s) secure communication served through wireless network platform **2210** to ensure network's operation and data integrity in addition to authorization and authentication procedures that CS gateway node(s) **2212** and PS gateway node(s) **2218** can enact. Moreover, provisioning server(s) can provision services from external network(s) like networks operated by a disparate service provider; for instance, WAN **2250** or Global Positioning System (GPS) network(s) (not shown). Provisioning server(s) can also provision coverage through networks associated to wireless network platform **2210** (e.g., deployed and operated by the same service provider), such as the distributed antennas networks shown in FIG. **1**(*s*) that enhance wireless service coverage by providing more network coverage. Repeater devices such as those shown in FIGS. **7**, **8**, and **9** also improve network coverage in order to enhance subscriber service experience by way of UE **2275**.

It is to be noted that server(s) **2214** can comprise one or more processors configured to confer at least in part the functionality of macro network platform **2210**. To that end, the one or more processor can execute code instructions stored in memory **2230**, for example. It is should be appreciated that server(s) **2214** can comprise a content manager **2215**, which operates in substantially the same manner as described hereinbefore.

In example embodiment **2200**, memory **2230** can store information related to operation of wireless network platform **2210**. Other operational information can comprise provisioning information of mobile devices served through wireless platform network **2210**, subscriber databases; application intelligence, pricing schemes, e.g., promotional rates, flat-rate programs, couponing campaigns; technical specification(s) consistent with telecommunication protocols for operation of disparate radio, or wireless, technology layers; and so forth. Memory **2230** can also store information from at least one of telephony network(s) **2240**, WAN **2250**, enterprise network(s) **2260**, or SS7 network **2270**. In an aspect, memory **2230** can be, for example, accessed as part of a data store component or as a remotely connected memory store.

In order to provide a context for the various aspects of the disclosed subject matter, FIG. **22**, and the following discussion, are intended to provide a brief, general description of a suitable environment in which the various aspects of the disclosed subject matter can be implemented. While the subject matter has been described above in the general context of computer-executable instructions of a computer program that runs on a computer and/or computers, those skilled in the art will recognize that the disclosed subject matter also can be implemented in combination with other program modules. Generally, program modules comprise

routines, programs, components, data structures, etc. that perform particular tasks and/or implement particular abstract data types.

FIG. **23** depicts an illustrative embodiment of a communication device **2300**. The communication device **2300** can serve as an illustrative embodiment of devices such as mobile devices and in-building devices referred to by the subject disclosure (e.g., in FIGS. **1** and **14**).

The communication device **2300** can comprise a wireline and/or wireless transceiver **2302** (herein transceiver **2302**), a user interface (UI) **2304**, a power supply **2314**, a location receiver **2316**, a motion sensor **2318**, an orientation sensor **2320**, and a controller **2306** for managing operations thereof. The transceiver **2302** can support short-range or long-range wireless access technologies such as Bluetooth®, ZigBee®, WiFi, DECT, or cellular communication technologies, just to mention a few (Bluetooth® and ZigBee® are trademarks registered by the Bluetooth® Special Interest Group and the ZigBee® Alliance, respectively). Cellular technologies can include, for example, CDMA-1X, UMTS/HSDPA, GSM/GPRS, TDMA/EDGE, EV/DO, WiMAX, SDR, LTE, as well as other next generation wireless communication technologies as they arise. The transceiver **2302** can also be adapted to support circuit-switched wireline access technologies (such as PSTN), packet-switched wireline access technologies (such as TCP/IP, VoIP, etc.), and combinations thereof.

The UI **2304** can include a depressible or touch-sensitive keypad **2308** with a navigation mechanism such as a roller ball, a joystick, a mouse, or a navigation disk for manipulating operations of the communication device **2300**. The keypad **2308** can be an integral part of a housing assembly of the communication device **2300** or an independent device operably coupled thereto by a tethered wireline interface (such as a USB cable) or a wireless interface supporting for example Bluetooth®. The keypad **2308** can represent a numeric keypad commonly used by phones, and/or a QWERTY keypad with alphanumeric keys. The UI **2304** can further include a display **2310** such as monochrome or color LCD (Liquid Crystal Display), OLED (Organic Light Emitting Diode) or other suitable display technology for conveying images to an end user of the communication device **2300**. In an embodiment where the display **2310** is touch-sensitive, a portion or all of the keypad **2308** can be presented by way of the display **2310** with navigation features.

The display **2310** can use touch screen technology to also serve as a user interface for detecting user input. As a touch screen display, the communication device **2300** can be adapted to present a user interface having graphical user interface (GUI) elements that can be selected by a user with a touch of a finger. The touch screen display **2310** can be equipped with capacitive, resistive or other forms of sensing technology to detect how much surface area of a user's finger has been placed on a portion of the touch screen display. This sensing information can be used to control the manipulation of the GUI elements or other functions of the user interface. The display **2310** can be an integral part of the housing assembly of the communication device **2300** or an independent device communicatively coupled thereto by a tethered wireline interface (such as a cable) or a wireless interface.

The UI **2304** can also include an audio system **2312** that utilizes audio technology for conveying low volume audio (such as audio heard in proximity of a human ear) and high volume audio (such as speakerphone for hands free operation). The audio system **2312** can further include a microphone for receiving audible signals of an end user. The audio system **2312** can also be used for voice recognition applications. The UI **2304** can further include an image sensor **2313** such as a charged coupled device (CCD) camera for capturing still or moving images.

The power supply **2314** can utilize common power management technologies such as replaceable and rechargeable batteries, supply regulation technologies, and/or charging system technologies for supplying energy to the components of the communication device **2300** to facilitate long-range or short-range portable communications. Alternatively, or in combination, the charging system can utilize external power sources such as DC power supplied over a physical interface such as a USB port or other suitable tethering technologies.

The location receiver **2316** can utilize location technology such as a global positioning system (GPS) receiver capable of assisted GPS for identifying a location of the communication device **2300** based on signals generated by a constellation of GPS satellites, which can be used for facilitating location services such as navigation. The motion sensor **2318** can utilize motion sensing technology such as an accelerometer, a gyroscope, or other suitable motion sensing technology to detect motion of the communication device **2300** in three-dimensional space. The orientation sensor **2320** can utilize orientation sensing technology such as a magnetometer to detect the orientation of the communication device **2300** (north, south, west, and east, as well as combined orientations in degrees, minutes, or other suitable orientation metrics).

The communication device **2300** can use the transceiver **2302** to also determine a proximity to a cellular, WiFi, Bluetooth®, or other wireless access points by sensing techniques such as utilizing a received signal strength indicator (RSSI) and/or signal time of arrival (TOA) or time of flight (TOF) measurements. The controller **2306** can utilize computing technologies such as a microprocessor, a digital signal processor (DSP), programmable gate arrays, application specific integrated circuits, and/or a video processor with associated storage memory such as Flash, ROM, RAM, SRAM, DRAM or other storage technologies for executing computer instructions, controlling, and processing data supplied by the aforementioned components of the communication device **2300**.

Other components not shown in FIG. **23** can be used in one or more embodiments of the subject disclosure. For instance, the communication device **2300** can include a slot for adding or removing an identity module such as a Subscriber Identity Module (SIM) card or Universal Integrated Circuit Card (UICC). SIM or UICC cards can be used for identifying subscriber services, executing programs, storing subscriber data, and so on.

In the subject specification, terms such as "store," "storage," "data store," data storage," "database," and substantially any other information storage component relevant to operation and functionality of a component, refer to "memory components," or entities embodied in a "memory" or components comprising the memory. It will be appreciated that the memory components described herein can be either volatile memory or nonvolatile memory, or can comprise both volatile and nonvolatile memory, by way of illustration, and not limitation, volatile memory, non-volatile memory, disk storage, and memory storage. Further, nonvolatile memory can be included in read only memory (ROM), programmable ROM (PROM), electrically programmable ROM (EPROM), electrically erasable ROM (EEPROM), or flash memory. Volatile memory can comprise random access memory (RAM), which acts as external

cache memory. By way of illustration and not limitation, RAM is available in many forms such as synchronous RAM (SRAM), dynamic RAM (DRAM), synchronous DRAM (SDRAM), double data rate SDRAM (DDR SDRAM), enhanced SDRAM (ESDRAM), Synchlink DRAM (SLDRAM), and direct Rambus RAM (DRRAM). Additionally, the disclosed memory components of systems or methods herein are intended to comprise, without being limited to comprising, these and any other suitable types of memory.

Moreover, it will be noted that the disclosed subject matter can be practiced with other computer system configurations, comprising single-processor or multiprocessor computer systems, mini-computing devices, mainframe computers, as well as personal computers, hand-held computing devices (e.g., PDA, phone, watch, tablet computers, netbook computers, etc.), microprocessor-based or programmable consumer or industrial electronics, and the like. The illustrated aspects can also be practiced in distributed computing environments where tasks are performed by remote processing devices that are linked through a communications network; however, some if not all aspects of the subject disclosure can be practiced on stand-alone computers. In a distributed computing environment, program modules can be located in both local and remote memory storage devices.

Some of the embodiments described herein can also employ artificial intelligence (AI) to facilitate automating one or more features described herein. For example, artificial intelligence can be used to determine positions around a wire that dielectric waveguides **604** and **606** should be placed in order to maximize transfer efficiency. The embodiments (e.g., in connection with automatically identifying acquired cell sites that provide a maximum value/benefit after addition to an existing communication network) can employ various AI-based schemes for carrying out various embodiments thereof. Moreover, the classifier can be employed to determine a ranking or priority of the each cell site of the acquired network. A classifier is a function that maps an input attribute vector, x=(x1, x2, x3, x4, . . . ,xn), to a confidence that the input belongs to a class, that is, f(x)=confidence(class). Such classification can employ a probabilistic and/or statistical-based analysis (e.g., factoring into the analysis utilities and costs) to prognose or infer an action that a user desires to be automatically performed. A support vector machine (SVM) is an example of a classifier that can be employed. The SVM operates by finding a hypersurface in the space of possible inputs, which the hypersurface attempts to split the triggering criteria from the non-triggering events. Intuitively, this makes the classification correct for testing data that is near, but not identical to training data. Other directed and undirected model classification approaches comprise, e.g., naïve Bayes, Bayesian networks, decision trees, neural networks, fuzzy logic models, and probabilistic classification models providing different patterns of independence can be employed. Classification as used herein also is inclusive of statistical regression that is utilized to develop models of priority.

As will be readily appreciated, one or more of the embodiments can employ classifiers that are explicitly trained (e.g., via a generic training data) as well as implicitly trained (e.g., via observing UE behavior, operator preferences, historical information, receiving extrinsic information). For example, SVMs can be configured via a learning or training phase within a classifier constructor and feature selection module. Thus, the classifier(s) can be used to automatically learn and perform a number of functions, including but not limited to determining according to a predetermined criteria which of the acquired cell sites will benefit a maximum number of subscribers and/or which of the acquired cell sites will add minimum value to the existing communication network coverage, etc.

As used in some contexts in this application, in some embodiments, the terms "component," "system" and the like are intended to refer to, or comprise, a computer-related entity or an entity related to an operational apparatus with one or more specific functionalities, wherein the entity can be either hardware, a combination of hardware and software, software, or software in execution. As an example, a component may be, but is not limited to being, a process running on a processor, a processor, an object, an executable, a thread of execution, computer-executable instructions, a program, and/or a computer. By way of illustration and not limitation, both an application running on a server and the server can be a component. One or more components may reside within a process and/or thread of execution and a component may be localized on one computer and/or distributed between two or more computers. In addition, these components can execute from various computer readable media having various data structures stored thereon. The components may communicate via local and/or remote processes such as in accordance with a signal having one or more data packets (e.g., data from one component interacting with another component in a local system, distributed system, and/or across a network such as the Internet with other systems via the signal). As another example, a component can be an apparatus with specific functionality provided by mechanical parts operated by electric or electronic circuitry, which is operated by a software or firmware application executed by a processor, wherein the processor can be internal or external to the apparatus and executes at least a part of the software or firmware application. As yet another example, a component can be an apparatus that provides specific functionality through electronic components without mechanical parts, the electronic components can comprise a processor therein to execute software or firmware that confers at least in part the functionality of the electronic components. While various components have been illustrated as separate components, it will be appreciated that multiple components can be implemented as a single component, or a single component can be implemented as multiple components, without departing from example embodiments.

Further, the various embodiments can be implemented as a method, apparatus or article of manufacture using standard programming and/or engineering techniques to produce software, firmware, hardware or any combination thereof to control a computer to implement the disclosed subject matter. The term "article of manufacture" as used herein is intended to encompass a computer program accessible from any computer-readable device or computer-readable storage/communications media. For example, computer readable storage media can include, but are not limited to, magnetic storage devices (e.g., hard disk, floppy disk, magnetic strips), optical disks (e.g., compact disk (CD), digital versatile disk (DVD)), smart cards, and flash memory devices (e.g., card, stick, key drive). Of course, those skilled in the art will recognize many modifications can be made to this configuration without departing from the scope or spirit of the various embodiments.

In addition, the words "example" and "exemplary" are used herein to mean serving as an instance or illustration. Any embodiment or design described herein as "example" or "exemplary" is not necessarily to be construed as preferred or advantageous over other embodiments or designs.

Rather, use of the word example or exemplary is intended to present concepts in a concrete fashion. As used in this application, the term "or" is intended to mean an inclusive "or" rather than an exclusive "or". That is, unless specified otherwise or clear from context, "X employs A or B" is intended to mean any of the natural inclusive permutations. That is, if X employs A; X employs B; or X employs both A and B, then "X employs A or B" is satisfied under any of the foregoing instances.

In addition, the articles "a" and "an" as used in this application and the appended claims should generally be construed to mean "one or more" unless specified otherwise or clear from context to be directed to a singular form.

Moreover, terms such as "user equipment," "mobile station," "mobile," subscriber station," "access terminal," "terminal," "handset," "mobile device" (and/or terms representing similar terminology) can refer to a wireless device utilized by a subscriber or user of a wireless communication service to receive or convey data, control, voice, video, sound, gaming or substantially any data-stream or signaling-stream. The foregoing terms are utilized interchangeably herein and with reference to the related drawings.

Furthermore, the terms "user," "subscriber," "customer," "consumer" and the like are employed interchangeably throughout, unless context warrants particular distinctions among the terms. It should be appreciated that such terms can refer to human entities or automated components supported through artificial intelligence (e.g., a capacity to make inference based, at least, on complex mathematical formalisms), which can provide simulated vision, sound recognition and so forth.

As employed herein, the term "processor" can refer to substantially any computing processing unit or device comprising, but not limited to comprising, single-core processors; single-processors with software multithread execution capability; multi-core processors; multi-core processors with software multithread execution capability; multi-core processors with hardware multithread technology; parallel platforms; and parallel platforms with distributed shared memory. Additionally, a processor can refer to an integrated circuit, an application specific integrated circuit (ASIC), a digital signal processor (DSP), a field programmable gate array (FPGA), a programmable logic controller (PLC), a complex programmable logic device (CPLD), a discrete gate or transistor logic, discrete hardware components or any combination thereof designed to perform the functions described herein. Processors can exploit nano-scale architectures such as, but not limited to, molecular and quantum-dot based transistors, switches and gates, in order to optimize space usage or enhance performance of user equipment. A processor can also be implemented as a combination of computing processing units.

As used herein, terms such as "data storage," data storage," "database," and substantially any other information storage component relevant to operation and functionality of a component, refer to "memory components," or entities embodied in a "memory" or components comprising the memory. It will be appreciated that the memory components or computer-readable storage media, described herein can be either volatile memory or nonvolatile memory or can include both volatile and nonvolatile memory.

As used herein, the term "millimeter-wave" can refer to electromagnetic waves that fall within the "millimeter-wave frequency band" of 30 GHz to 300 GHz. The term "microwave" can refer to electromagnetic waves that fall within the "microwave frequency band" of 300 MHz to 300 GHz.

What has been described above includes mere examples of various embodiments. It is, of course, not possible to describe every conceivable combination of components or methodologies for purposes of describing these examples, but one of ordinary skill in the art can recognize that many further combinations and permutations of the present embodiments are possible. Accordingly, the embodiments disclosed and/or claimed herein are intended to embrace all such alterations, modifications and variations that fall within the spirit and scope of the appended claims. Furthermore, to the extent that the term "includes" is used in either the detailed description or the claims, such term is intended to be inclusive in a manner similar to the term "comprising" as "comprising" is interpreted when employed as a transitional word in a claim.

Although specific embodiments have been illustrated and described herein, it should be appreciated that any arrangement which achieves the same or similar purpose may be substituted for the embodiments described or shown by the subject disclosure. The subject disclosure is intended to cover any and all adaptations or variations of various embodiments. Combinations of the above embodiments, and other embodiments not specifically described herein, can be used in the subject disclosure. For instance, one or more features from one or more embodiments can be combined with one or more features of one or more other embodiments. In one or more embodiments, features that are positively recited can also be negatively recited and excluded from the embodiment with or without replacement by another structural and/or functional feature. The steps or functions described with respect to the embodiments of the subject disclosure can be performed in any order. The steps or functions described with respect to the embodiments of the subject disclosure can be performed alone or in combination with other steps or functions of the subject disclosure, as well as from other embodiments or from other steps that have not been described in the subject disclosure. Further, more than or less than all of the features described with respect to an embodiment can also be utilized.

What is claimed is:

1. A method, comprising:

generating, by an apparatus, first modulated electromagnetic waves;

transmitting, by the apparatus, the first modulated electromagnetic waves via a waveguide coupler located in proximity to a transmission medium, wherein the first modulated electromagnetic waves generate second electromagnetic waves that propagate at least in part on an outer surface of the transmission medium, wherein the second electromagnetic waves have a first spectral range, and wherein the first spectral range includes a first control channel and a first plurality of bands; and

transmitting, by a first antenna coupled to the transmission medium, a first wireless signal based on the second electromagnetic waves received from the transmission medium.

2. The method of claim **1**, further comprising receiving, by the apparatus, fourth electromagnetic waves on the outer surface of the waveguide coupler, wherein the fourth electromagnetic waves are generated from third electromagnetic waves propagating on the outer surface of the transmission medium, and wherein the fourth electromagnetic waves have a second spectral range, and wherein the second spectral range is divided into a second control channel and a second plurality of bands.

3. The method of claim **2**, wherein the first spectral range and the second spectral range are separated by a guard band,

and wherein the third electromagnetic waves are generated from a second wireless signal received by a second antenna of a distributed antenna system.

4. The method of claim **2**, wherein a first portion of the first plurality of bands and a second portion of the second plurality of bands are utilized by a first service provider of communication services, and wherein a third portion of the first plurality of bands and a fourth portion of the second plurality of bands are utilized by a second service provider of communication services.

5. The method of claim **2**, wherein the second spectral range comprises a communication link for downstream communications.

6. The method of claim **2**, wherein the first spectral range has a first spread spectrum profile, and wherein the second spectral range has a second spread spectrum profile.

7. The method of claim **6**, wherein the first spread spectrum profile and the second spread spectrum profile have a power level and a frequency range corresponding to unlicensed spectrum.

8. The method of claim **1**, wherein the first spectral range comprises a communication link for upstream communications.

9. The method of claim **1**, wherein the first wireless signal is directed to a second antenna of a distributed antenna system.

10. The method of claim **9**, wherein the second antenna is coupled to a processing system that determines from the first control channel that signals in a frequency band of the first plurality of bands are to be frequency converted for wireless delivery to a mobile communication device.

11. The method of claim **10**, wherein the signals in the frequency band comprise modulated signals.

12. The method of claim **1**, further comprising providing, by the apparatus, control information in the first control channel for identifying a processing system of a distributed antenna system which is to process signals in one of the first plurality of bands.

13. The method of claim **1**, wherein the waveguide coupler comprises a dielectric coupler.

14. A system, comprising:

a launcher to facilitate generation of first electromagnetic waves;

a coupler coupled to a transmission medium to facilitate propagation of the first electromagnetic waves along the coupler to generate second electromagnetic waves that propagate on a surface of the transmission medium, wherein the second electromagnetic waves have a first spectral range that includes a first control channel and a first plurality of bands; and

a first antenna coupled to the transmission medium to facilitate transmission of a first wireless signal generated according to the second electromagnetic waves received from the transmission medium.

15. The system of claim **14**, wherein the first wireless signal is directed to a second antenna of a distributed antenna system.

16. The system of claim **15**, wherein information included in the first control channel directs a processing system coupled to the second antenna to process signals in one of the first plurality of bands.

17. The system of claim **16**, further comprising a receiver that facilitates receiving fourth electromagnetic waves via the coupler, wherein the fourth electromagnetic waves are generated from third electromagnetic waves propagating on the surface of the transmission medium, and wherein the fourth electromagnetic waves have a second spectral range, and wherein the second spectral range is divided into a second control channel and a second plurality of bands.

18. The system of claim **17**, wherein the first spectral range and the second spectral range are separated by a guard band, and wherein the third electromagnetic waves are generated from a second wireless signal received by the second antenna of the distributed antenna system.

19. A system, comprising:

a processing system including a processor; and

a memory that stores executable instructions that, when executed by the processing system, facilitate performance of operations, comprising:

generating an electromagnetic wave that propagates on a surface of a transmission medium, the electromagnetic wave having a spectral range that includes a control channel and a plurality of bands, each band including a modulated signal; and

transmitting, by a first antenna coupled to the transmission medium, a wireless signal based on the electromagnetic wave received from the transmission medium.

20. The system of claim **19**, wherein the wireless signal is directed to a second antenna of a distributed antenna system, and wherein information included in the control channel directs a processing system coupled to the second antenna to frequency convert the modulated signal included in one of the plurality of bands for wireless delivery to a mobile communication device.

* * * * *