US009610975B1

(12) **United States Patent**
Hu et al.

(10) **Patent No.: US 9,610,975 B1**
(45) **Date of Patent: Apr. 4, 2017**

(54) **HITCH ANGLE DETECTION FOR TRAILER BACKUP ASSIST SYSTEM**

(71) Applicant: **Ford Global Technologies, LLC**, Dearborn, MI (US)

(72) Inventors: **Zheng Hu**, Farmington Hills, MI (US); **John P. Joyce**, West Bloomfield, MI (US)

(73) Assignee: **Ford Global Technologies, LLC**, Dearborn, MI (US)

(*) Notice: Subject to any disclaimer, the term of this patent is extended or adjusted under 35 U.S.C. 154(b) by 0 days.

(21) Appl. No.: **14/972,761**

(22) Filed: **Dec. 17, 2015**

(51) **Int. Cl.**

B62D 13/00	(2006.01)
B62D 13/06	(2006.01)
B60D 1/30	(2006.01)
B60D 1/36	(2006.01)
B60Q 5/00	(2006.01)
B60D 1/145	(2006.01)
B60D 1/06	(2006.01)
B62D 6/00	(2006.01)
B62D 5/04	(2006.01)
B60W 10/18	(2012.01)

(52) **U.S. Cl.**
CPC ***B62D 13/06*** (2013.01); ***B60D 1/06*** (2013.01); ***B60D 1/145*** (2013.01); ***B60D 1/30*** (2013.01); ***B60D 1/36*** (2013.01); ***B60Q 5/00*** (2013.01); ***B60W 10/18*** (2013.01); ***B62D 5/0463*** (2013.01); ***B62D 6/005*** (2013.01)

(58) **Field of Classification Search**
None
See application file for complete search history.

(56) **References Cited**

U.S. PATENT DOCUMENTS

3,542,390	A	11/1970	Fikes et al.
3,605,088	A	9/1971	Savelli
3,787,077	A	1/1974	Sanders
3,833,928	A	9/1974	Gavit et al.
3,860,257	A	1/1975	Mesly
4,040,006	A	8/1977	Kimmel

(Continued)

FOREIGN PATENT DOCUMENTS

CN	101833869	A	9/2010
CN	201923085	U	8/2011

(Continued)

OTHER PUBLICATIONS

Novak, Domen; Dovzan, Dejan; Grebensek, Rok; Oblak, Simon, "Automated Parking System for a Truck and Trailer", International Conference on Advances in the Internet, Processing, Systems and Interdisciplinary Research, Florence, 2007, WorldCat.org, 13 pgs.

(Continued)

Primary Examiner — Jonathan M Dager
(74) *Attorney, Agent, or Firm* — Raymond Coppiellie; Price Heneveld LLP

(57) **ABSTRACT**

A system for detecting a hitch angle between a vehicle and a trailer is provided herein. An imaging device is configured to capture images of the trailer and a controller is configured to process images captured by the imaging device. The controller derives a template image having a trailer contour and matches the template image to a search image. The hitch angle is determined based on a positional relationship between the template image and the search image.

18 Claims, 16 Drawing Sheets

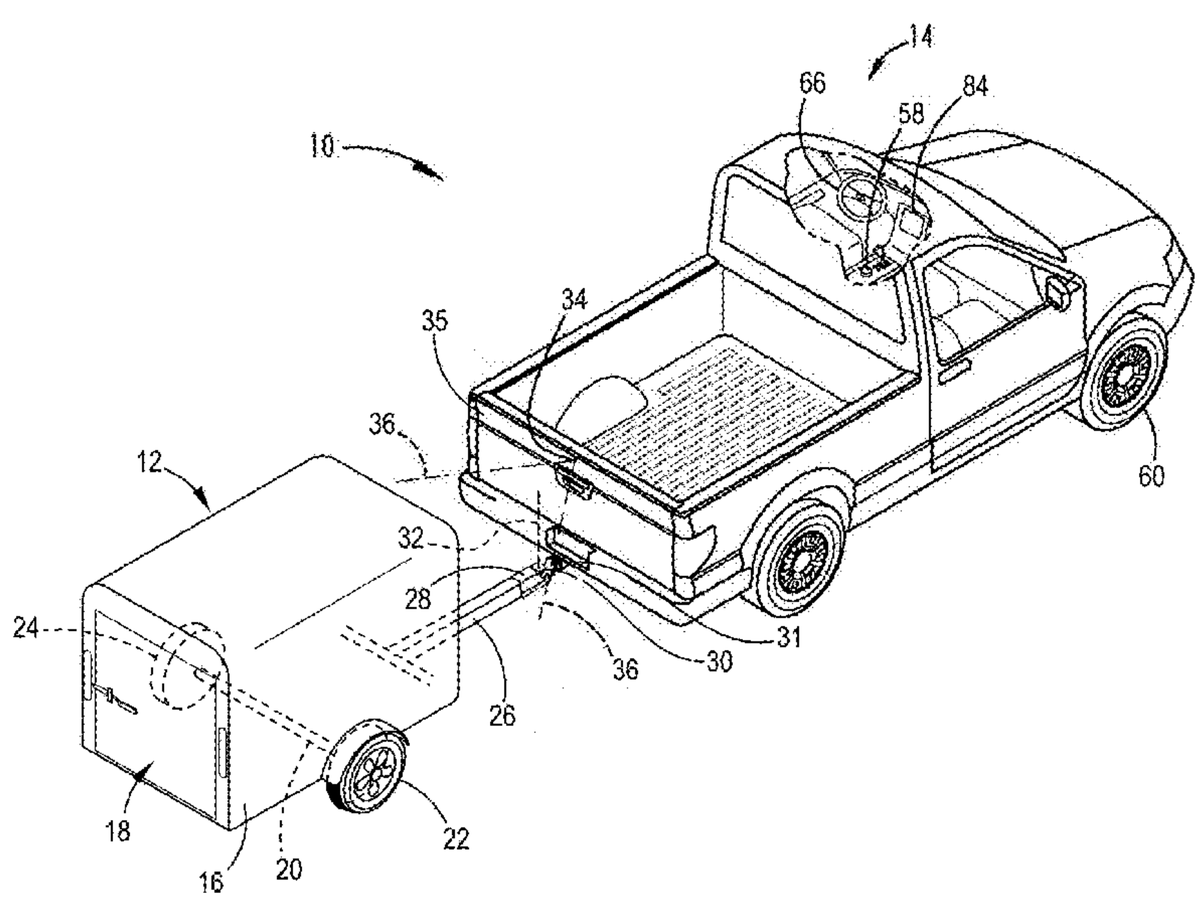

(56) **References Cited**

U.S. PATENT DOCUMENTS

4,042,132 A 8/1977 Bohman et al.
4,122,390 A 10/1978 Kollitz et al.
4,212,483 A 7/1980 Howard
4,277,804 A 7/1981 Robison
4,366,966 A 1/1983 Ratsko et al.
4,735,432 A 4/1988 Brown
4,752,080 A 6/1988 Rogers
4,848,499 A 7/1989 Martinet et al.
4,852,901 A 8/1989 Beasley et al.
4,943,080 A 7/1990 Reimer
5,001,639 A 3/1991 Breen
5,056,905 A 10/1991 Jensen
5,097,250 A 3/1992 Hernandez
5,108,123 A 4/1992 Rubenzik
5,108,158 A 4/1992 Breen
5,132,851 A 7/1992 Bomar et al.
5,152,544 A 10/1992 Dierker, Jr. et al.
5,191,328 A 3/1993 Nelson
5,244,226 A 9/1993 Bergh
5,246,242 A 9/1993 Penzotti
5,247,442 A * 9/1993 Kendall B62D 13/06 280/426
5,282,641 A 2/1994 McLaughlin
5,289,892 A 3/1994 Notsu
5,290,057 A 3/1994 Pellerito
5,455,557 A 10/1995 Noll et al.
5,461,357 A 10/1995 Yoshioka et al.
5,521,633 A 5/1996 Nakajima et al.
5,523,947 A 6/1996 Breen
5,541,778 A 7/1996 DeFlorio
5,558,350 A 9/1996 Kimbrough et al.
5,559,696 A 9/1996 Borenstein
5,579,228 A 11/1996 Kimbrough et al.
5,631,656 A 5/1997 Hartman et al.
5,650,764 A 7/1997 McCullough
5,690,347 A 11/1997 Juergens et al.
5,719,713 A 2/1998 Brown
5,747,683 A * 5/1998 Gerum G05B 13/042 701/72
5,821,852 A 10/1998 Fairchild
5,947,588 A 9/1999 Huang
5,980,048 A 11/1999 Rannells, Jr. et al.
6,041,582 A 3/2000 Tiede et al.
6,042,196 A 3/2000 Nakamura et al.
6,124,709 A 9/2000 Allwine
6,142,372 A 11/2000 Wright
6,151,175 A 11/2000 Osha
6,182,010 B1 1/2001 Berstis
6,198,992 B1 3/2001 Winslow
6,217,177 B1 4/2001 Rost
6,218,828 B1 4/2001 Bates et al.
6,223,104 B1 4/2001 Kamen et al.
6,223,114 B1 4/2001 Boros et al.
6,268,800 B1 * 7/2001 Howard B60D 1/305 340/431
6,292,094 B1 * 9/2001 Deng B62D 7/159 340/431
6,318,747 B1 11/2001 Ratican
6,351,698 B1 2/2002 Kubota et al.
6,411,898 B2 6/2002 Ishida et al.
6,472,865 B1 10/2002 Tola et al.
6,480,104 B1 11/2002 Wall et al.
6,483,429 B1 11/2002 Yasui et al.
6,494,476 B2 12/2002 Masters et al.
6,498,977 B2 12/2002 Wetzel et al.
6,526,335 B1 2/2003 Treyz et al.
6,539,288 B2 3/2003 Ishida et al.
6,568,093 B2 5/2003 Kogiso et al.
6,577,952 B2 6/2003 Geier et al.
6,587,760 B2 7/2003 Okamoto
6,668,225 B2 12/2003 Oh et al.
6,683,539 B2 1/2004 Trajkovic et al.
6,712,378 B1 3/2004 Austin
6,801,125 B1 10/2004 McGregor et al.
6,806,809 B2 10/2004 Lee et al.
6,820,888 B1 11/2004 Griffin
6,837,432 B2 1/2005 Tsikos et al.
6,838,979 B2 1/2005 Deng et al.
6,854,557 B1 * 2/2005 Deng B62D 7/159 180/235
6,857,494 B2 2/2005 Kobayashi et al.
6,879,240 B2 4/2005 Kruse
6,933,837 B2 8/2005 Gunderson et al.
6,956,468 B2 10/2005 Lee et al.
6,959,970 B2 11/2005 Tseng
6,970,184 B2 11/2005 Hirama et al.
6,989,739 B2 1/2006 Li
6,999,856 B2 2/2006 Lee et al.
7,005,974 B2 2/2006 McMahon et al.
7,008,088 B2 3/2006 Pisciotti
7,028,804 B2 4/2006 Eki et al.
7,032,705 B2 4/2006 Zheng et al.
7,046,127 B2 5/2006 Boddy
7,058,493 B2 6/2006 Inagaki
7,085,634 B2 8/2006 Endo et al.
7,089,101 B2 8/2006 Fischer et al.
7,136,754 B2 11/2006 Hahn et al.
7,142,098 B2 11/2006 Lang et al.
7,154,385 B2 12/2006 Lee et al.
7,159,890 B2 1/2007 Craig et al.
7,167,785 B2 1/2007 Lohberg et al.
7,170,285 B2 1/2007 Spratte
7,171,330 B2 1/2007 Kruse et al.
7,195,267 B1 3/2007 Thompson
7,204,504 B2 4/2007 Gehring et al.
7,219,913 B2 5/2007 Atley
7,225,891 B2 6/2007 Gehring et al.
7,229,139 B2 6/2007 Lu et al.
7,237,790 B2 7/2007 Gehring et al.
7,239,958 B2 7/2007 Grougan et al.
7,269,489 B2 * 9/2007 Deng B62D 13/00 180/418
7,272,481 B2 9/2007 Einig et al.
7,295,907 B2 11/2007 Lu et al.
7,353,110 B2 4/2008 Kim
7,401,871 B2 7/2008 Lu et al.
7,405,557 B2 7/2008 Spratte et al.
7,413,266 B2 8/2008 Lenz et al.
7,425,889 B2 9/2008 Widmann et al.
7,447,585 B2 11/2008 Tandy, Jr. et al.
7,451,020 B2 11/2008 Goetting et al.
7,463,137 B2 12/2008 Wishart et al.
7,504,995 B2 3/2009 Lawrence et al.
7,532,109 B2 5/2009 Takahama et al.
7,537,256 B2 5/2009 Gates et al.
7,540,523 B2 * 6/2009 Russell B60D 1/30 280/430
7,548,155 B2 6/2009 Schutt et al.
7,568,716 B2 8/2009 Dietz
7,623,952 B2 11/2009 Unruh et al.
7,640,108 B2 12/2009 Shimizu et al.
7,648,153 B2 1/2010 Metternich et al.
7,658,524 B2 2/2010 Johnson et al.
7,690,737 B2 4/2010 Lu
7,692,557 B2 4/2010 Medina et al.
7,715,953 B2 5/2010 Shepard
7,731,302 B2 6/2010 Tandy, Jr. et al.
7,777,615 B2 8/2010 Okuda
7,793,965 B2 * 9/2010 Padula B62D 13/025 280/426
7,798,263 B2 9/2010 Tandy, Jr. et al.
7,878,545 B2 2/2011 Rhymer et al.
7,904,222 B2 3/2011 Lee et al.
7,905,507 B2 3/2011 Perri
7,950,751 B2 5/2011 Offerle et al.
7,953,536 B2 5/2011 Katrak
7,969,326 B2 6/2011 Sakakibara
7,974,444 B2 7/2011 Hongo
8,010,252 B2 8/2011 Getman et al.
8,010,253 B2 8/2011 Lundquist
8,036,792 B2 * 10/2011 Dechamp B62D 13/06 180/235
8,038,166 B1 10/2011 Piesinger
8,044,776 B2 10/2011 Schofield et al.

(56) **References Cited**

U.S. PATENT DOCUMENTS

8,044,779 B2 10/2011 Hahn et al.
8,068,019 B2 11/2011 Bennie et al.
8,073,594 B2 12/2011 Lee et al.
8,157,284 B1 4/2012 McGhie et al.
8,165,770 B2 4/2012 Getman et al.
8,167,444 B2 5/2012 Lee et al.
8,170,726 B2 5/2012 Chen et al.
8,174,576 B2 5/2012 Akatsuka et al.
8,180,543 B2 5/2012 Futamura et al.
8,190,364 B2 5/2012 Rekow
8,191,915 B2 6/2012 Freese et al.
8,192,036 B2 6/2012 Lee et al.
8,192,064 B2 6/2012 Johnson et al.
8,205,704 B2 6/2012 Kadowaki et al.
8,215,436 B2 7/2012 DeGrave et al.
8,223,204 B2 7/2012 Hahn
8,244,442 B2 8/2012 Craig et al.
8,260,518 B2 9/2012 Englert
8,267,485 B2 9/2012 Barlsen et al.
8,280,607 B2 10/2012 Gatti et al.
8,308,182 B2 11/2012 Ortmann et al.
8,310,353 B2 11/2012 Hinninger et al.
8,319,663 B2 11/2012 Von Reyher et al.
8,326,504 B2 12/2012 Wu et al.
8,342,560 B2 1/2013 Albers et al.
8,374,749 B2 2/2013 Tanaka
8,380,390 B2 2/2013 Sy et al.
8,380,416 B2 2/2013 Offerle et al.
8,393,632 B2 3/2013 Vortmeyer et al.
8,401,744 B2 3/2013 Chiocco
8,414,171 B2 4/2013 Kawamura
8,427,288 B2 4/2013 Schofield et al.
8,451,107 B2 5/2013 Lu et al.
8,469,125 B2 6/2013 Yu et al.
8,471,691 B2 6/2013 Zhang et al.
8,504,243 B2 8/2013 Kageyama
8,548,680 B2 10/2013 Ryerson et al.
8,548,683 B2 10/2013 Cebon et al.
8,576,115 B2 11/2013 Basten
8,626,382 B2 1/2014 Obradovich
8,675,953 B1 3/2014 Elwell et al.
8,755,984 B2 6/2014 Rupp et al.
8,807,261 B2 8/2014 Subrt et al.
8,811,698 B2 8/2014 Kono et al.
8,825,328 B2 9/2014 Rupp et al.
8,833,789 B2 9/2014 Anderson
8,886,400 B2 11/2014 Kossira et al.
8,888,120 B2 11/2014 Trevino
8,909,426 B2 12/2014 Rhode et al.
8,930,140 B2 1/2015 Trombley et al.
8,939,462 B2 1/2015 Adamczyk et al.
8,955,865 B2 * 2/2015 Fortin B62D 13/00 280/442
8,972,109 B2 3/2015 Lavoie et al.
9,008,913 B1 * 4/2015 Sears B62D 13/00 172/264
9,026,311 B1 5/2015 Pieronek et al.
9,042,603 B2 5/2015 Elwart et al.
9,082,315 B2 7/2015 Lin et al.
9,108,598 B2 8/2015 Headley
9,114,832 B2 8/2015 Wang et al.
9,120,358 B2 9/2015 Motts et al.
9,120,359 B2 * 9/2015 Chiu B60D 1/62
9,156,496 B2 10/2015 Greenwood et al.
9,164,955 B2 10/2015 Lavoie et al.
9,180,890 B2 11/2015 Lu et al.
9,187,124 B2 11/2015 Trombley et al.
9,248,858 B2 2/2016 Lavoie et al.
9,315,212 B1 4/2016 Kyrtsos et al.
9,335,162 B2 5/2016 Kyrtsos et al.
9,340,228 B2 5/2016 Xu et al.
9,393,996 B2 7/2016 Goswami et al.
9,434,414 B2 9/2016 Lavoie
9,500,497 B2 11/2016 Lavoie
9,506,774 B2 * 11/2016 Shutko G01C 21/3647
2001/0024333 A1 9/2001 Rost
2001/0037164 A1 11/2001 Hecker
2002/0128764 A1 9/2002 Hecker et al.
2002/0145663 A1 * 10/2002 Mizusawa B60D 1/36 348/118
2003/0222982 A1 12/2003 Hamdan et al.
2003/0234512 A1 12/2003 Holub
2004/0017285 A1 1/2004 Zielinski et al.
2004/0021291 A1 2/2004 Haug et al.
2004/0093139 A1 5/2004 Wildey et al.
2004/0119822 A1 6/2004 Custer et al.
2004/0130441 A1 * 7/2004 Lee B60D 1/58 340/431
2004/0215374 A1 * 10/2004 Shepard B60D 1/58 701/1
2004/0222881 A1 * 11/2004 Deng B62D 15/028 340/431
2005/0000738 A1 1/2005 Gehring et al.
2005/0055138 A1 * 3/2005 Lee G05D 1/0891 701/1
2005/0073433 A1 4/2005 Gunderson et al.
2005/0074143 A1 4/2005 Kawai
2005/0128059 A1 6/2005 Vause
2005/0146607 A1 7/2005 Linn et al.
2005/0206224 A1 * 9/2005 Lu B60T 7/12 303/7
2005/0206225 A1 * 9/2005 Offerle B60T 8/1706 303/7
2005/0206229 A1 * 9/2005 Lu B60T 7/20 303/123
2005/0206231 A1 * 9/2005 Lu B60G 17/0162 303/146
2005/0209763 A1 * 9/2005 Offerle B60T 8/1755 701/83
2005/0236201 A1 10/2005 Spannheimer et al.
2005/0236894 A1 * 10/2005 Lu B60T 8/1755 303/139
2005/0236896 A1 10/2005 Offerle et al.
2006/0041358 A1 2/2006 Hara
2006/0071447 A1 4/2006 Gehring et al.
2006/0076828 A1 4/2006 Lu et al.
2006/0103511 A1 * 5/2006 Lee B62D 5/008 340/431
2006/0111820 A1 5/2006 Goetting et al.
2006/0142936 A1 6/2006 Dix
2006/0155455 A1 7/2006 Lucas et al.
2006/0244579 A1 * 11/2006 Raab B60T 8/1708 340/438
2006/0250501 A1 11/2006 Widmann et al.
2006/0287821 A1 12/2006 Lin
2006/0293800 A1 12/2006 Bauer et al.
2007/0019421 A1 1/2007 Kregness et al.
2007/0027581 A1 2/2007 Bauer et al.
2007/0058273 A1 3/2007 Ito et al.
2007/0090688 A1 4/2007 Haemmerling et al.
2007/0132560 A1 6/2007 Nystrom et al.
2007/0152424 A1 7/2007 Deng et al.
2007/0198190 A1 8/2007 Bauer et al.
2007/0216136 A1 9/2007 Dietz
2007/0285808 A1 12/2007 Beale
2008/0143593 A1 6/2008 Graziano et al.
2008/0147277 A1 6/2008 Lu et al.
2008/0180526 A1 7/2008 Trevino
2008/0231701 A1 * 9/2008 Greenwood B60R 1/00 348/148
2008/0312792 A1 12/2008 Dechamp
2009/0005932 A1 * 1/2009 Lee B60D 1/58 701/41
2009/0063053 A1 3/2009 Basson et al.
2009/0079828 A1 3/2009 Lee et al.
2009/0085775 A1 4/2009 Otsuka et al.
2009/0093928 A1 * 4/2009 Getman B60T 8/1755 701/37
2009/0198425 A1 8/2009 Englert
2009/0228182 A1 9/2009 Waldbauer et al.
2009/0248346 A1 10/2009 Fennel et al.
2009/0271078 A1 10/2009 Dickinson
2009/0300701 A1 12/2009 Karaoguz et al.

(56) **References Cited**

U.S. PATENT DOCUMENTS

2009/0306854 A1 12/2009 Dechamp
2009/0306861 A1 12/2009 Schumann et al.
2010/0060739 A1 3/2010 Salazar
2010/0063702 A1 3/2010 Sabelstrom et al.
2010/0156667 A1 6/2010 Bennie et al.
2010/0156671 A1 6/2010 Lee et al.
2010/0157061 A1 6/2010 Katsman et al.
2010/0171828 A1 7/2010 Ishii
2010/0211248 A1* 8/2010 Craig B60W 30/02 701/31.4
2010/0211278 A1* 8/2010 Craig B60T 8/1708 701/70
2010/0222964 A1 9/2010 Dechamp
2010/0324770 A1 12/2010 Ramsey et al.
2010/0332049 A1 12/2010 Sy et al.
2011/0001825 A1 1/2011 Hahn
2011/0018231 A1* 1/2011 Collenberg B60D 1/06 280/448
2011/0022282 A1 1/2011 Wu et al.
2011/0050903 A1 3/2011 Vorobiev
2011/0063425 A1 3/2011 Tieman
2011/0087398 A1 4/2011 Lu et al.
2011/0112721 A1 5/2011 Wang et al.
2011/0125457 A1 5/2011 Lee et al.
2011/0149077 A1 6/2011 Robert
2011/0153198 A1 6/2011 Kokkas et al.
2011/0160956 A1 6/2011 Chung et al.
2011/0216199 A1 9/2011 Trevino et al.
2011/0257860 A1 10/2011 Getman et al.
2012/0041658 A1 2/2012 Turner
2012/0062743 A1 3/2012 Lynam et al.
2012/0062744 A1 3/2012 Schofield et al.
2012/0086808 A1 4/2012 Lynam
2012/0095649 A1 4/2012 Klier et al.
2012/0109471 A1 5/2012 Wu
2012/0112434 A1 5/2012 Albers et al.
2012/0170286 A1 7/2012 Bodem et al.
2012/0185131 A1* 7/2012 Headley B60D 1/245 701/41
2012/0191285 A1 7/2012 Woolf et al.
2012/0200706 A1 8/2012 Greenwood et al.
2012/0229639 A1 9/2012 Singleton
2012/0265416 A1 10/2012 Lu et al.
2012/0271512 A1* 10/2012 Rupp B62D 13/06 701/41
2012/0271514 A1* 10/2012 Lavoie B60W 30/18036 701/42
2012/0271515 A1* 10/2012 Rhode B62D 1/22 701/42
2012/0271522 A1* 10/2012 Rupp B62D 15/027 701/70
2012/0283909 A1 11/2012 Dix
2012/0283910 A1 11/2012 Lee et al.
2012/0310594 A1 12/2012 Watanabe
2012/0316732 A1 12/2012 Auer
2013/0006472 A1 1/2013 McClain et al.
2013/0024064 A1 1/2013 Shepard
2013/0027195 A1 1/2013 Van Wiemeersch et al.
2013/0038731 A1 2/2013 Brey et al.
2013/0057397 A1 3/2013 Cutler
2013/0076007 A1 3/2013 Goode
2013/0082453 A1 4/2013 Padula
2013/0120572 A1 5/2013 Kwon
2013/0158803 A1 6/2013 Headley
2013/0158863 A1* 6/2013 Skvarce G08G 1/168 701/428
2013/0179038 A1* 7/2013 Goswami B62D 13/005 701/42
2013/0207834 A1 8/2013 Mizutani et al.
2013/0226390 A1 8/2013 Luo et al.
2013/0250114 A1 9/2013 Lu
2013/0261843 A1 10/2013 Kossira et al.
2013/0268160 A1* 10/2013 Trombley B62D 13/06 701/42
2014/0005918 A1 1/2014 Qiang
2014/0012465 A1* 1/2014 Shank B60D 1/58 701/36
2014/0025260 A1 1/2014 McClure
2014/0052337 A1* 2/2014 Lavoie B62D 13/06 701/41
2014/0058614 A1* 2/2014 Trombley B60R 1/00 701/29.1
2014/0058622 A1* 2/2014 Trombley B60R 1/00 701/33.2
2014/0058655 A1 2/2014 Trombley et al.
2014/0058668 A1* 2/2014 Trombley G01C 21/20 701/523
2014/0067154 A1 3/2014 Yu et al.
2014/0067155 A1 3/2014 Yu et al.
2014/0085472 A1* 3/2014 Lu B60R 1/002 348/148
2014/0088797 A1 3/2014 McClain et al.
2014/0088824 A1 3/2014 Ishimoto
2014/0160276 A1* 6/2014 Pliefke B60R 1/00 348/118
2014/0168415 A1 6/2014 Ihlenburg et al.
2014/0172232 A1* 6/2014 Rupp B60W 30/18036 701/36
2014/0183841 A1 7/2014 Jones
2014/0188344 A1 7/2014 Lavoie
2014/0188346 A1* 7/2014 Lavoie B62D 13/06 701/42
2014/0200759 A1* 7/2014 Lu B60D 1/245 701/28
2014/0210456 A1* 7/2014 Crossman B62D 13/06 324/207.2
2014/0218506 A1* 8/2014 Trombley B60R 1/003 348/113
2014/0218522 A1* 8/2014 Lavoie G08G 1/0962 348/148
2014/0222288 A1* 8/2014 Lavoie G06F 17/00 701/41
2014/0236532 A1 8/2014 Trombley et al.
2014/0249691 A1* 9/2014 Hafner B62D 13/06 701/1
2014/0267688 A1* 9/2014 Aich H04N 7/181 348/113
2014/0267689 A1* 9/2014 Lavoie H04N 7/183 348/113
2014/0277941 A1* 9/2014 Chiu B62D 13/06 701/41
2014/0277942 A1* 9/2014 Kyrtsos G01B 21/02 701/41
2014/0297128 A1* 10/2014 Lavoie G01B 21/06 701/41
2014/0297129 A1* 10/2014 Lavoie B62D 13/06 701/41
2014/0303847 A1* 10/2014 Lavoie B62D 15/0275 701/41
2014/0303849 A1* 10/2014 Hafner B62D 13/06 701/42
2014/0309888 A1* 10/2014 Smit B62D 13/06 701/41
2014/0324295 A1* 10/2014 Lavoie B62D 13/06 701/41
2014/0343793 A1* 11/2014 Lavoie B62D 13/06 701/41
2014/0343795 A1* 11/2014 Lavoie B62D 13/06 701/42
2014/0358417 A1* 12/2014 Lavoie G01C 21/165 701/300
2014/0358424 A1* 12/2014 Lavoie G01C 21/3676 701/428
2014/0358429 A1* 12/2014 Shutko G01C 21/3647 701/458
2014/0379217 A1* 12/2014 Rupp B62D 13/06 701/41
2015/0002670 A1* 1/2015 Bajpai G06K 9/00791 348/148
2015/0035256 A1 2/2015 Klank et al.

(56) **References Cited**

U.S. PATENT DOCUMENTS

2015/0057903	A1*	2/2015	Rhode	B60T 8/1708 701/70
2015/0066296	A1*	3/2015	Trombley	B62D 13/06 701/41
2015/0066298	A1	3/2015	Sharma et al.	
2015/0105975	A1	4/2015	Dunn	
2015/0115571	A1*	4/2015	Zhang	B60D 1/06 280/477
2015/0120141	A1*	4/2015	Lavoie	B62D 15/027 701/41
2015/0120143	A1*	4/2015	Schlichting	B62D 13/06 701/41
2015/0134183	A1*	5/2015	Lavoie	B60W 30/18036 701/23
2015/0138340	A1*	5/2015	Lavoie	B62D 13/06 348/118
2015/0149040	A1*	5/2015	Hueger	B62D 13/06 701/41
2015/0158527	A1*	6/2015	Hafner	B60D 1/245 701/41
2015/0165850	A1*	6/2015	Chiu	B60D 1/30 701/41
2015/0197278	A1*	7/2015	Boos	G05D 1/0044 701/2
2015/0203156	A1*	7/2015	Hafner	B62D 13/06 701/36
2015/0210254	A1*	7/2015	Pieronek	B60W 10/18 701/70
2015/0210317	A1*	7/2015	Hafner	B62D 13/06 701/41
2015/0217693	A1*	8/2015	Pliefke	B60R 1/00 348/118
2015/0269444	A1	9/2015	Lameyre et al.	
2016/0009288	A1	1/2016	Yu	
2016/0039456	A1*	2/2016	Lavoie	B62D 15/027 701/41
2016/0059780	A1*	3/2016	Lavoie	B60R 1/00 348/118
2016/0059888	A1	3/2016	Bradley et al.	
2016/0059889	A1	3/2016	Herzog et al.	
2016/0152263	A1	6/2016	Singh et al.	
2016/0153778	A1*	6/2016	Singh	G06T 7/60 701/36
2016/0229452	A1*	8/2016	Lavoie	B62D 15/027
2016/0280267	A1*	9/2016	Lavoie	B62D 15/0285

FOREIGN PATENT DOCUMENTS

CN	102582686	B	9/2013
CN	203292137	U	11/2013
DE	3923676	A1	1/1991
DE	3931518	A1	4/1991
DE	9208595	U1	8/1992
DE	19526702	A1	2/1997
DE	10030738	C1	8/2001
DE	10031244	A1	1/2002
DE	10065230	A1	7/2002
DE	10122562	C1	7/2002
DE	10154612	A1	5/2003
DE	10312548	B3	5/2004
DE	10333998	A1	2/2005
DE	102004050149	A1	4/2006
DE	102005042957	A1	3/2007
DE	102005043466	A1	3/2007
DE	102005043467	A1	3/2007
DE	102005043468	A1	3/2007
DE	102006002294	A1	7/2007
DE	102006048947	A1	4/2008
DE	102006056408	A1	6/2008
DE	102008020838	A1	11/2008
DE	102007029413	A1	1/2009
DE	102008045436	A1	3/2010
DE	102006035021	B4	4/2010
DE	102008043675	A1	5/2010
DE	102009007990	A1	8/2010
DE	102009012253	A1	9/2010
DE	102009027041	A1	12/2010
DE	102009038552	A1	2/2011
DE	102010004920	A1	7/2011
DE	102010006323	A1	8/2011
DE	102008004158	B4	10/2011
DE	102008004159	B4	10/2011
DE	102008004160	B4	10/2011
DE	102010021052	A1	11/2011
DE	102010029184	A1	11/2011
DE	102010045519	A1	3/2012
DE	102011104256	A1	7/2012
DE	102011101990	B3	10/2012
DE	202012010517	U	12/2012
DE	102011108440	A1	1/2013
DE	102011120814	A1	6/2013
DE	102012006206	A1	10/2013
DE	102012206133	A1	10/2013
DE	102012019234	A1	4/2014
EP	0418653	A1	3/1991
EP	0433858	A2	6/1991
EP	1245445	A2	10/2002
EP	1361543	A2	11/2003
EP	1442931	A2	8/2004
EP	1593552	B1	3/2007
EP	1810913	A1	7/2007
EP	2199188	A2	6/2010
EP	2388180	A2	11/2011
EP	2431225	A1	3/2012
EP	2452549	A1	5/2012
EP	2487454	A2	8/2012
EP	2551132	A1	1/2013
EP	2644477	A1	10/2013
EP	2803944	A2	11/2014
FR	2515379	A1	4/1983
FR	2980750	A1	4/2013
GB	2265587	A	10/1993
GB	2342630	A	4/2000
GB	2398048	A	8/2004
GB	2398049	A	8/2004
GB	2398050	A	8/2004
JP	61006458		1/1986
JP	6159491	A	3/1986
JP	6385568	U	6/1988
JP	01095980	A	4/1989
JP	01095981	A	4/1989
JP	08289286	A	11/1996
JP	09267762	A	10/1997
JP	09328078	A	12/1997
JP	10001063	A	1/1998
JP	11124051	A	5/1999
JP	11278319	A	10/1999
JP	2000267181	A	9/2000
JP	2002012172	A	1/2002
JP	2002068032	A	3/2002
JP	2003034261	A	2/2003
JP	2003148938	A	5/2003
JP	2004114879	A	4/2004
JP	3716722	B2	11/2005
JP	2008027138	A1	2/2008
JP	2008123028	A	5/2008
JP	2012105158	A	5/2012
JP	2012166647	A	9/2012
JP	2014002056	A	1/2014
KR	1020060012710	A	2/2006
KR	1020070034729	A	3/2007
TW	200930010	A	7/2009
WO	8503263	A1	8/1985
WO	0044605	A1	8/2000
WO	2005005200	A2	1/2005
WO	2005116688	A2	12/2005
WO	2006042665	A1	4/2006
WO	2012059207	A1	5/2012
WO	2012103193	A1	8/2012
WO	2013048994	A1	4/2013
WO	2013070539	A1	5/2013
WO	2013081984	A1	6/2013

(56) **References Cited**

FOREIGN PATENT DOCUMENTS

WO	2014006500	A2	1/2014
WO	2014019730	A1	2/2014
WO	2014034289	A	2/2014
WO	2014037500	A1	3/2014
WO	2014070047	A1	5/2014
WO	2014092611	A1	6/2014
WO	2014123575	A1	8/2014
WO	2015074027	A1	5/2015

OTHER PUBLICATIONS

Microsoft, Navigation System, Sync Powered by Microsoft, Ford Motor Company, Jul. 2009,196 pgs.
Kristopher Bunker, "2012 Guide to Towing", Trailer Life, 2012, pp. 1-42.
"IBall Wireless Trailer Hitch Camera", Product Listing, Amazon, Nov. 2, 2010, pp. 1-5.
M. Wagner, D. Zoebel, and A. Meroth, "An Adaptive Software and Systems Architecture for Driver Assistance Systems Based on Service Orientation" International Journal of Machine Learning and Computing, Oct. 2011, vol. 1, No. 4, pp. 359-365.
"Surround View System", ASL—Vision 360, 2010, pp. 1.
Jae Il Roh, Hyunsuk Lee, Woojin Chung, "Control of a Car with a Trailer Using the Driver Assistance System", IEEE, International Conference on Robotics and Biomimetics, Dec. 7-11, 2011; Phuket, Thailand, pp. 2890-2895.
Young Jin Lee, Sung Won Park, Hyeun Cheol Cho, Dong Seop Han, Geun Jo Han, and Kwon Soon Lee; "Development of Auto Alignment System Between Trailer and Freight Wagon Using Electronic Sensors for Intermodal Transportation" IEEE, 2010, pp. 1211-1215.
"Back-Up and Utility Light System", Back-Up Buddy Inc., Plainville, MA, pp. 1-2; date unknown.
Ford Motor Company, "09 F-150", Brochure, www.fordvehicles.com, pp. 1-30.
Michael Paine, "Heavy Vehicle Object Detection Systems", Vehicle Design and Research Pty Lmited for VicRoads, Jun. 2003, pp. 1-22.
A.M.C. Odhams; R.L. Roebuck; C. Cebon, "Implementation of Active Steering on a Multiple Trailer Long combination Vehicle", Cambridge University, Engineering Department; Cambridge, United Kingdom, pp. 1-13; date unknown.
Dougloas Newcomb, "Range Rover Evoque's Surround Camera System", Tech Feature Friday, Article, Jun. 15, 2012, pp. 1-2.
"Trailer Vision", Trailer Vision Ltd., Brochure, www.trailervision.co.uk, pp. 1-4; date unknown.
Micah Steele, R. Brent Gillespie, "Shared Control Between Human and Machine: Using a Haptic Steering Wheel to Aid in Land Vehicle Guidance", University of Michigan, pp. 1-5; date unknown.
Laszlo Palkovics, Pal Michelberger, Jozsef Bokor, Peter Gaspar, "Adaptive Identification for Heavy-Truck Stability Control", Vehicle Systems Dynamics Supplement, vol. 25, No. sup1, 1996, pp. 502-518.
David Hodo, John Hung, Bob Selfridge, Andrew Schwartz, "Robotic DGM Tow Vehicle Project Overview", Auburn University, US Army Corp of Engineers, pp. 1-9; date unknown.
"Convenience and Loadspace Features" Jaguar Land Rover Limited, 2012, pp. 1-15, http://www.landrover.com/us/en/lr/all-new-range-rover/explore/.
"Rearview Parking Assist Systems", Donmar Sunroofs & Accessories, Brochure, Aug. 2013, pp. 1-13.
"Alpine Electronics Introduces Two New Drive Assist Solutions", Alpine Electronics of America, Inc., Jan. 7, 2010, pp. 1-2.
"Delphi Lane Departure Warning", Delphi Corporation, Troy, Michigan pp. 1-2; date unknown.
Jesus Morales, Anthony Mandow, Jorge L. Martinez, and Alfonso Garcia-Cerezo, "Driver Assistance System for Backward Maneuvers in Passive Multi-trailer Vehicles", International Conference on Intelligent Robots and Systems (IROS), Oct. 7-12, 2012, pp. 4853-4858.
"The Vehicle Rear Lighting System for Safe Driving in Reverse", White Night Rear Lighting Systems, Cruiser Stainless Accessories, pp. 1-3; date unknown.
"Ford Super Duty: Truck Technologies", Brochure, Sep. 2011, 2 pages.
Kristopher Bunker, "2012 Guide to Towing", Trailer Life, 2012, 38 pages.
A. Gonzalez-Cantos, "Backing-Up Maneuvers of Autonomous Tractor-Trailer Vehicles using the Qualitative Theory of Nonlinear Dynamical Systems," International Journal of Robotics Research, Jan. 2009, vol. 28, 1 page.
L. Chu, Y. Fang, M. Shang, J. Guo, F. Zhou, "Estimation of Articulation Angle for Tractor Semi-Trailer Based on State Observer", ACM Digital Library, ICMTMA '10 Proceedings of the 2010 International Conference on Measuring Technology and Automation, vol. 2, Mar. 2010, 1 page.
M. Wagner, D. Zoebel, and A. Meroth, "Adaptive Software and Systems Architecture for Driver Assistance Systems" International Journal of Machine Learning and Computing, Oct. 2011, vol. 1, No. 4, 7 pages.
F.W. Kienhöfer; D. Cebon, "An Investigation of ABS Strategies for Articulated Vehicles", Cambridge University, Engineering Department, United Kingdom, date unknown, 13 pages.
C. Lundquist; W. Reinelt; O. Enqvist, "Back Driving Assistant for Passenger Cars with Trailer", ZF Lenksysteme GmbH, Schwäbisch Gmünd, Germany, 2006 (SAE Int'l) Jan. 2006, 8 pages.
Zhe Leng; Minor, M., "A Simple Tractor-Trailer Backing Control Law for Path Following", IEEE, Intelligent Robots and Systems (IROS) IEEE/RSJ International Conference, Oct. 2010, 2 pages.
Kinjo, H.; Maeshiro, M.; Uezato, E.; Yamamoto, T., "Adaptive Genetic Algorithm Observer and its Application to Trailer Truck Control System", IEEE, SICE-ICASE International Joint Conference, Oct. 2006, 2 pgs.
J. Roh; H. Lee; W. Chung, "Control of a Car with a Trailer Using the Driver Assistance System", IEEE, International Conference on Robotics and Biomimetics; Phuket, Thailand, Dec. 2011, 6 pages.
A. Gonzalez-Cantos; J.I. Maza; A. Ollero, "Design of a Stable Backing up Fuzzy Control of Autonomous Articulated Vehicles for Factory Automation", Dept. of Systems Engineering and Automatic Control, University of Seville, Spain, 2001, 5 pages.
Altafini, C.; Speranzon, A.; Wahlberg, B., "A Feedback Control Scheme for Reversing a Truck and Trailer Vehicle", IEEE, Robotics and Automation, IEEE Transactions, Dec. 2001, vol. 17, No. 6, 2 pages.
Zare, A. Sharafi; M. Kamyad, A.V., "A New Approach in Intelligent Trailer Parking", IEEE, 2010 2nd International Mechanical and Electrical Technology (ICMET), Sep. 2010, 1 page.
Tanaka, K.; Sano, M., "A Robust Stabilization Problem of Fuzzy Control Systems and its Application to Backing up Control of a Truck-trailer", IEEE Transactions on Fuzzy Systems, May 1994, vol. 2, No. 2, 1 page.
Sharafi, M. Zare; A. Kamyad; A.V. Nikpoor, S., "Intelligent Parking Method for Truck in Presence of Fixed and Moving Obstacles and Trailer in Presence of Fixed Obstacles: Advanced Fuzzy Logic Technologies in Industrial Applications", IEEE, 2010 International Electronics and Information Engineering (ICEIE), Aug. 2010, vol. 2, 1 page.
Hodo, D. W.; Hung, J.Y.; Bevly, D. M.; Millhouse, S., "Effects of Sensor Placement and Errors on Path Following Control of a Mobile Robot-Trailer System", IEEE, American Control Conference, Jul. 2007, 1 page.
Sharafi, M. Zare; A. Kamyad; A.V. Nikpoor, S., "Intelligent Parking Method for Trailers in Presence of Fixed and Moving Obstacles", IEEE, 2010 3rd International Conference on Advanced Computer Theory and Engineering (ICACTE), Aug. 2010, vol. 6, 1 page.
Chieh Chen; Tomizuka, M., "Steering and Independent Braking Control for Tractor-Semitrailer Vehicles in Automated Highway Systems", IEEE, Proceedings of the 34th IEEE Conference on Decision and Control, Dec. 1995, vol. 2, 1 page.
P. Bolzern, R.M. Desantis, A. Locatelli, "An Input-Output Linearization Approach to the Control of an n-Body Articulated Vehicle", J. Dyn. Sys., Meas., Control, Sep. 2001, vol. 123, No. 3, 3 pages.

(56) **References Cited**

OTHER PUBLICATIONS

Dieter Zöbel, David Polock, Philipp Wojke, "Steering Assistance for Backing Up Articulated Vehicles", Systemics, Cybernetics and Informatics; vol. 1, No. 5, date unknown, 6 pages.
J.R. Billing; J.D. Patten; R.B. Madill, "Development of Configurations for Infrastructure-Friendly Five- and Six-Axle SemiTrailers", National Research Council of Canada and Ontario Ministry of Transportation, date unknown, 11 pages.
Jesus Morales, Anthony Mandow, Jorge L. Martinez, and Alfonso Garcia-Cerezo, "Driver Assistance System for Backward Maneuvers in Passive Multi-Trailer Vehicles", IEEE/RSJ International Conference on Intelligent Robots and Systems (IROS), Oct. 2012, 7 pages.
Cedric Pradalier and Kane Usher, "Experiments in Autonomous Reversing of a Tractor-Trailer System", 6th International Conference on Field and Service Robotics, inria-00195700, Version 1, Dec. 2007, 10 pages.
Andri Riid, Alar Leibak, Ennu Rüstern, "Fuzzy Backing Control of Truck and Two Trailers", Tallinn University of Technology; Tallinn, Estonia, date unknown, 6 pages.
Jane McGrath, "How to Avoid Jackknifing", A Discovery Company, date unknown, 3 pages.
Claudio Altafini, Alberto Speranzon, and Karl Henrik Johansson, "Hybrid Control of a Truck and Trailer Vehicle", Springer-Verlag Berlin Heidelberg, HSCC 2002, LNCS 2289; 2002, 14 pages.
Jujnovich, B.; Roebuck, R.; Odhams, A.; David, C., "Implementation of Active Rear Steering of a Tractor Semitrailer", Cambridge University, Engineering Department; Cambridge, United Kingdom, date unknown, 10 pages.
A.M.C. Odhams; R.L. Roebuck; C. Cebon, "Implementation of Active Steering on a Multiple Trailer Long combination Vehicle", Cambridge University, Engineering Department; Cambridge, United Kingdom, date unknown, 13 pages.
Cedric Pradalier and Kane Usher, "Robust Trajectory Tracking for a Reversing Tractor-Trailer System", (Draft), Field and Service Robotics Conference, CSIRO ICT Centre, Jul. 2007, 16 pages.
Stahn, R.; Heiserich, G.; Stopp, A., "Laser Scanner-Based Navigation for Commercial Vehicles", IEEE, 2007 IEEE Intelligent Vehicles Symposium, Jun. 2007, 1 page.
Lee Yong H.; Weiwen Deng; Chin Yuen-Kwok Steve; McKay Neil, "Feasibility Study for a Vehicle-Trailer Backing Up Control", Refdoc.fr, SAE Transactions, vol. 113, No. 6, 2004, 1 page.
A.M.C. Odhams; R.L. Roebuck; B.A. Jujnovich; D. Cebon, "Active Steering of a Tractor-Semi-Trailer" Proceedings of the Institution of Mechanical Engineers, Part D: Journal of Automobile Engineering, SAGE Journals, vol. 225, No. 7, Jul. 2011, 1 page.
Haviland, G S, "Automatic Brake Control for Trucks—What Good is it?", TRID, Society of Automotive Engineers, Sep. 1968, 1 page.
William E. Travis; David W. Hodo; David M. Bevly; John Y. Hung, "UGV Trailer Position Estimation Using a Dynamic Base RTK System", American Institute of Aeronautics and Astronautics, date unknown, 12 pages.
"VSE Electronic Trailer Steering", ETS for Trailers, version 2009, VSE Trailer Systems B.V., 2009, 28 pages.
"Telematics Past, Present, and Future," Automotive Service Association, www.ASAshop.org, May 2008, 20 pages.
"Fully Automatic Trailer Tow Hitch With LIN Bus," https://webista.bmw.com/webista/show?id=1860575499&lang=engb&print=1, date unknown, 5 pages.
"VBOX Yaw Rate Sensor With Integral Accelerometers," Racelogic, www.racelogic.co.uk, date unknown, 2 pages.
P.D.C.R Jayarathna; J.V Wijayakulasooriya; S.R Kodituwakku, "Fuzzy Logic and Neural Network Control Systems for Backing up a Truck and a Trailer", International Journal of Latest Trends in Computing, vol. 2, No. 3, Sep. 2011, 8 pages.
Olof Enqvist, "AFS-Assisted Trailer Reversing," Institutionen för systemteknik Deartment of Electrical Engineering, Jan. 27, 2006, 57 pages.
SH. Azadi, H.R. Rezaei Nedamani, and R. Kazemi, "Automatic Parking of an Articulated Vehicle Using ANFIS", Global Journal of Science, Engineering and Technology (ISSN: 2322-2441), 2013, pp. 93-104, Issue No. 14.
F. Cuesta and A. Ollero, "Intelligent System for Parallel Parking of Cars and Tractor-Trailers", Intelligent Mobile Robot Navigation, STAR, 2005, pp. 159-188, Springer-Verlag Berlin Heidelberg.

* cited by examiner

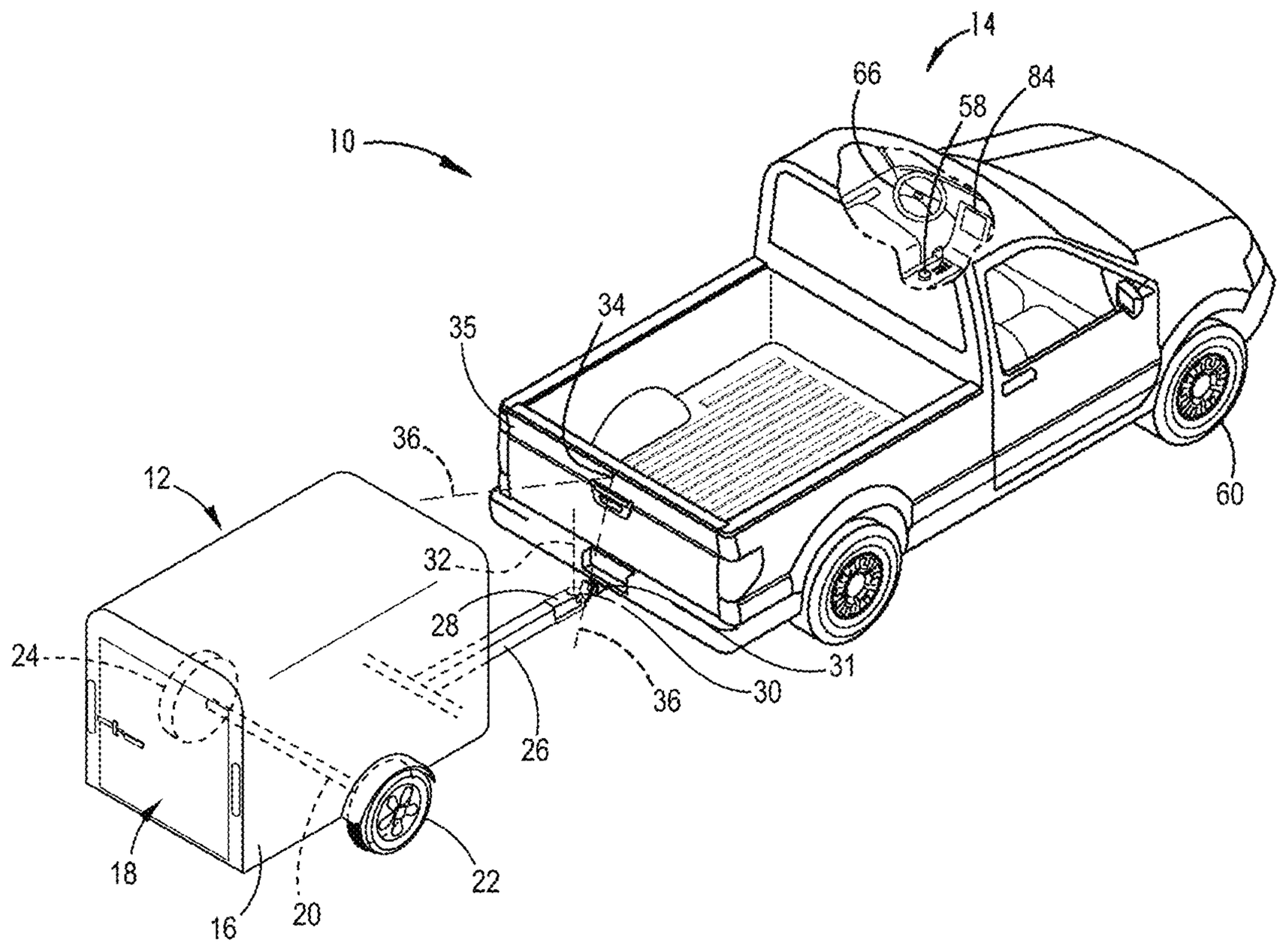

FIG. 1

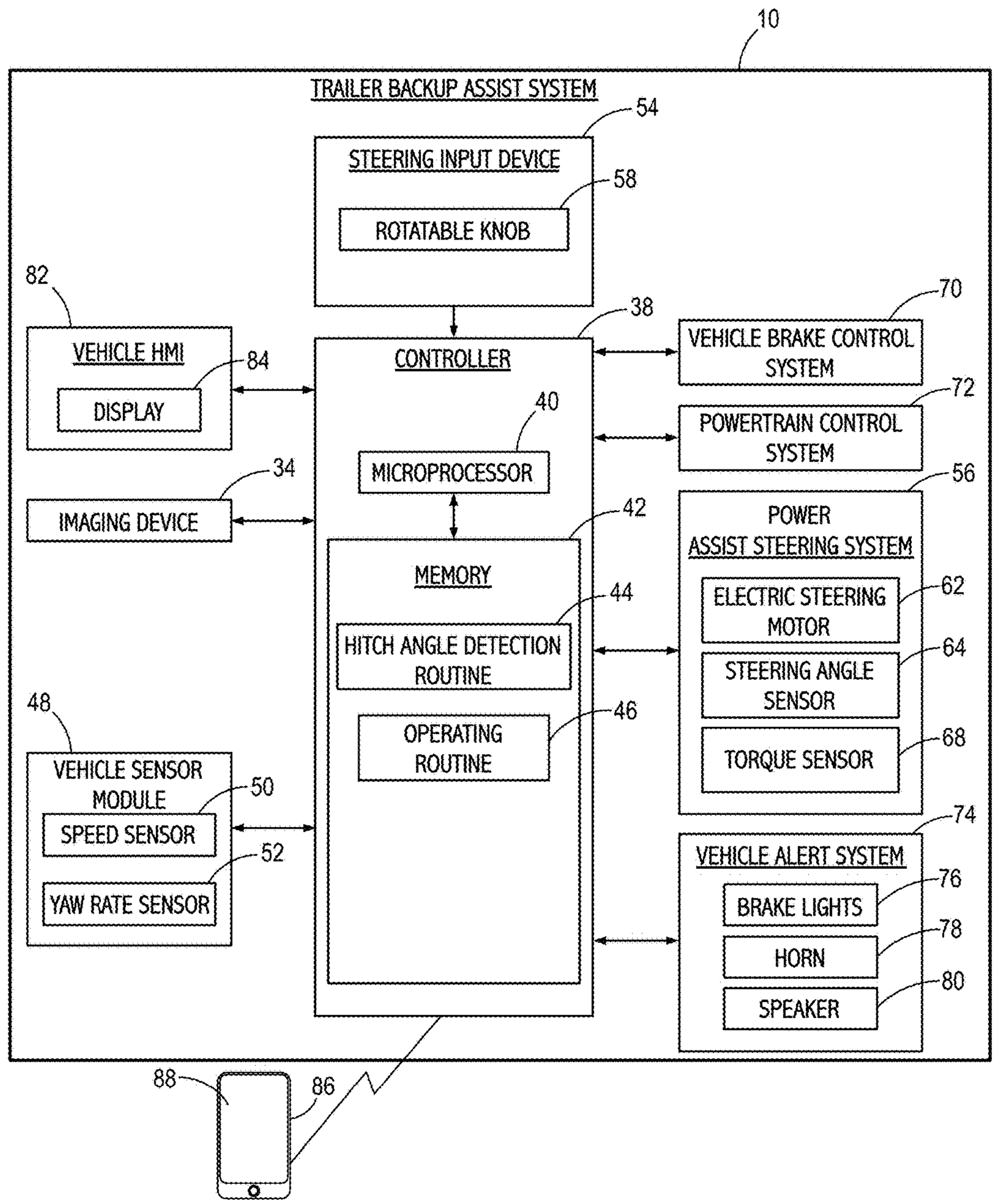
10
TRAILER BACKUP ASSIST SYSTEM
54
STEERING INPUT DEVICE
58
ROTATABLE KNOB
82
VEHICLE HMI
84
DISPLAY
38
CONTROLLER
70
VEHICLE BRAKE CONTROL SYSTEM
72
POWERTRAIN CONTROL SYSTEM
40
MICROPROCESSOR
34
IMAGING DEVICE
42
MEMORY
44
HITCH ANGLE DETECTION ROUTINE
46
OPERATING ROUTINE
56
POWER ASSIST STEERING SYSTEM
62
ELECTRIC STEERING MOTOR
64
STEERING ANGLE SENSOR
68
TORQUE SENSOR
48
VEHICLE SENSOR MODULE
50
SPEED SENSOR
52
YAW RATE SENSOR
74
VEHICLE ALERT SYSTEM
76
BRAKE LIGHTS
78
HORN
80
SPEAKER
88
86

FIG. 2

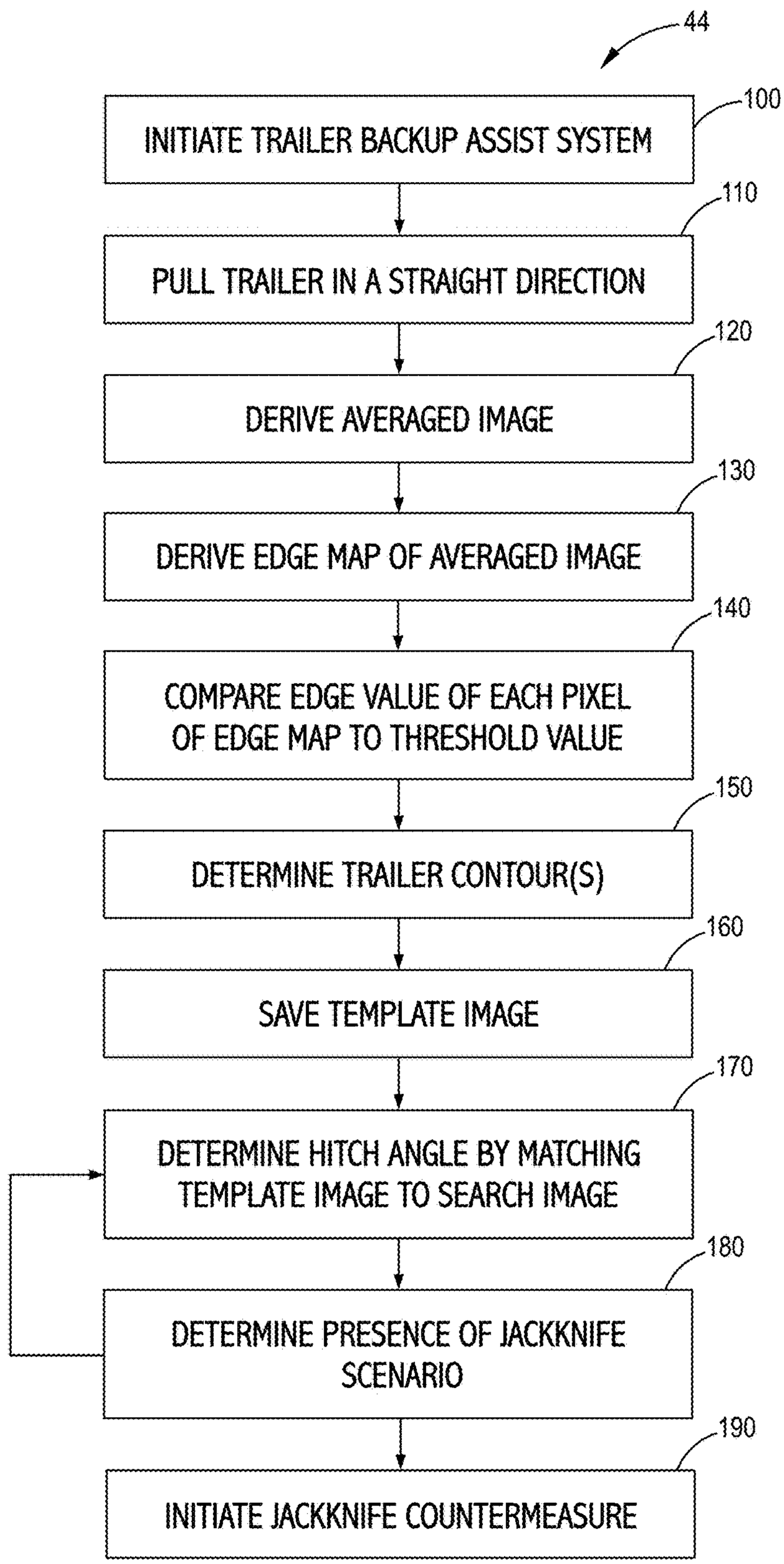
44
INITIATE TRAILER BACKUP ASSIST SYSTEM
100
PULL TRAILER IN A STRAIGHT DIRECTION
110
DERIVE AVERAGED IMAGE
120
DERIVE EDGE MAP OF AVERAGED IMAGE
130
COMPARE EDGE VALUE OF EACH PIXEL OF EDGE MAP TO THRESHOLD VALUE
140
DETERMINE TRAILER CONTOUR(S)
150
SAVE TEMPLATE IMAGE
160
DETERMINE HITCH ANGLE BY MATCHING TEMPLATE IMAGE TO SEARCH IMAGE
170
DETERMINE PRESENCE OF JACKKNIFE SCENARIO
180
INITIATE JACKKNIFE COUNTERMEASURE
190

FIG. 3

FIG. 4

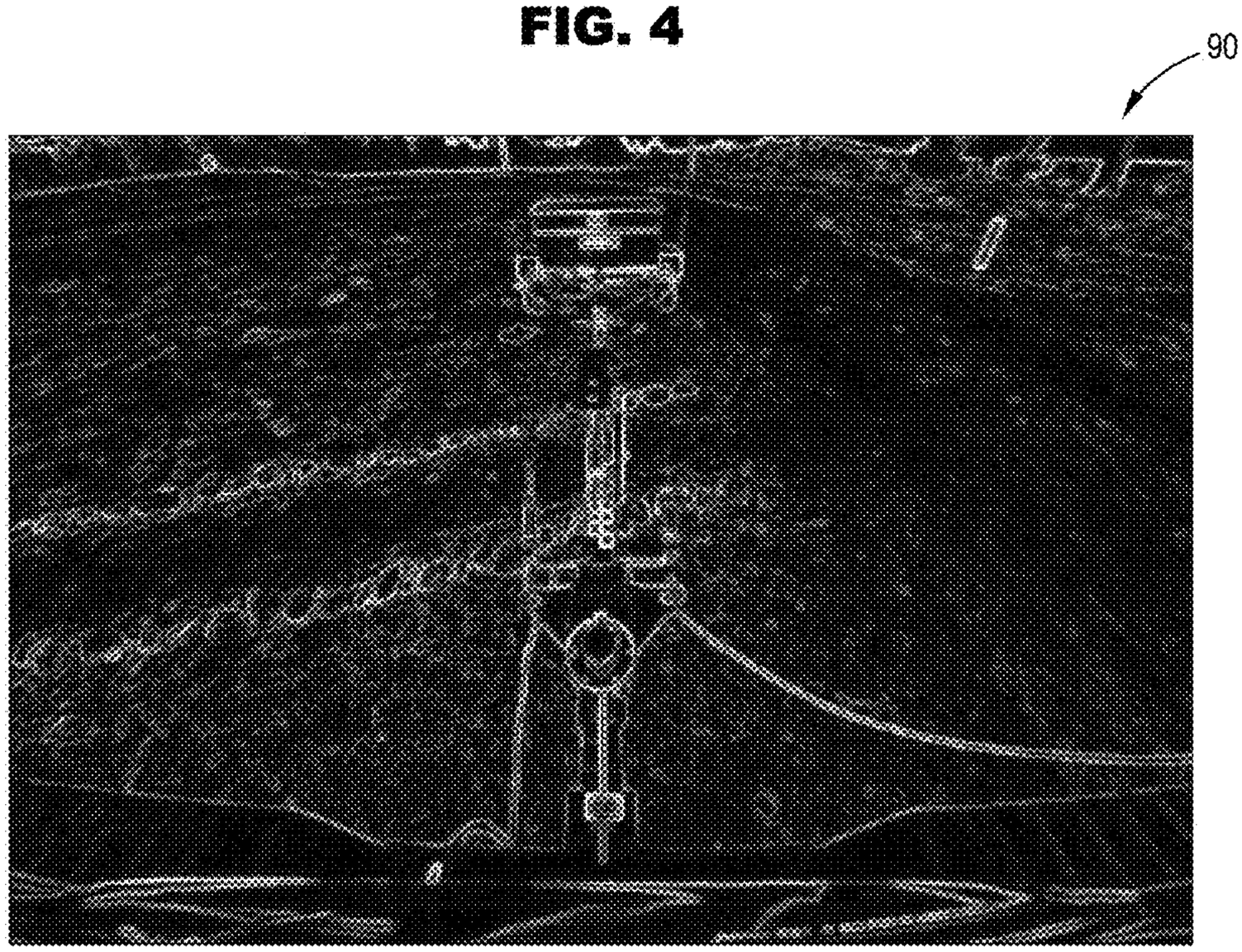

FIG. 5

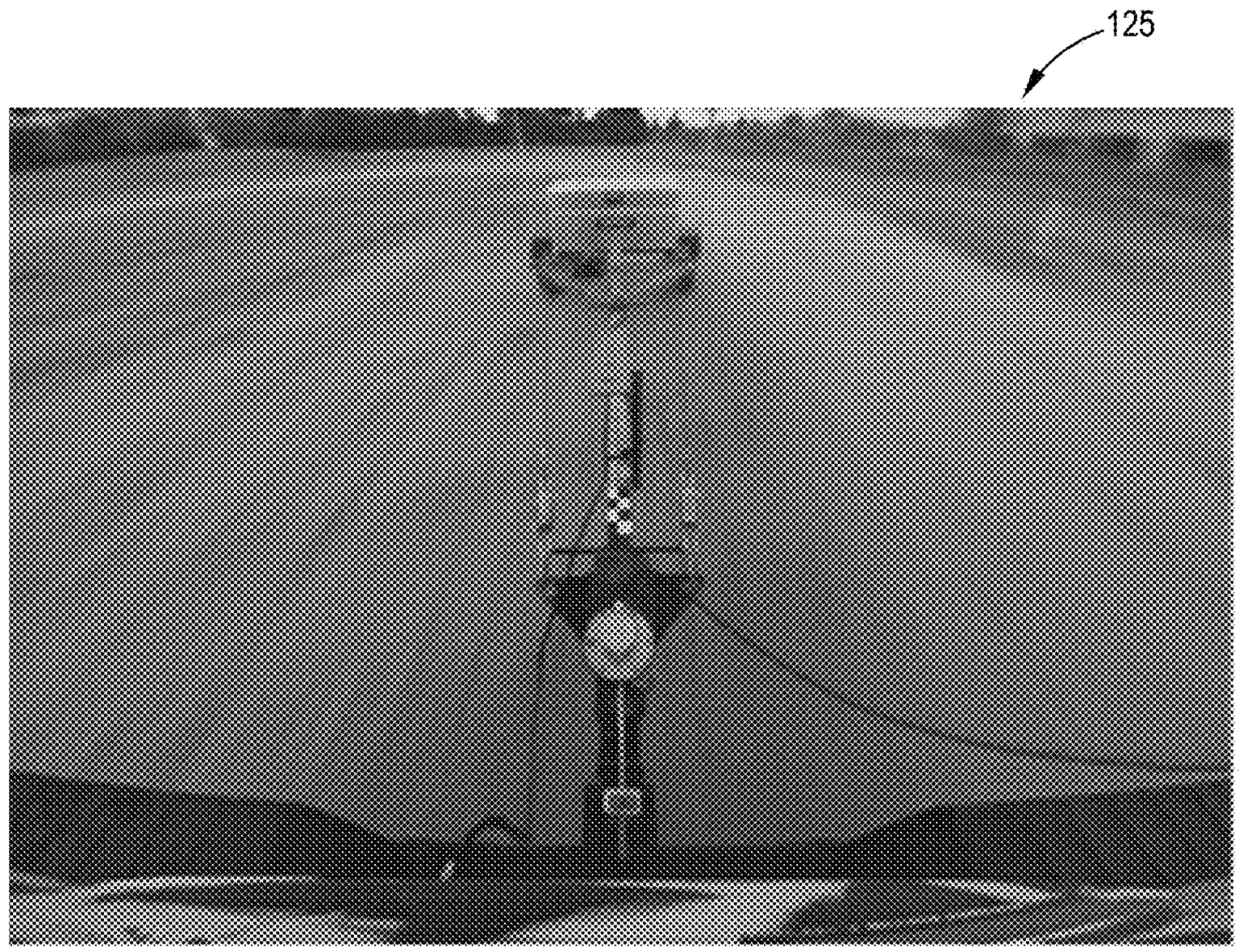

FIG. 6

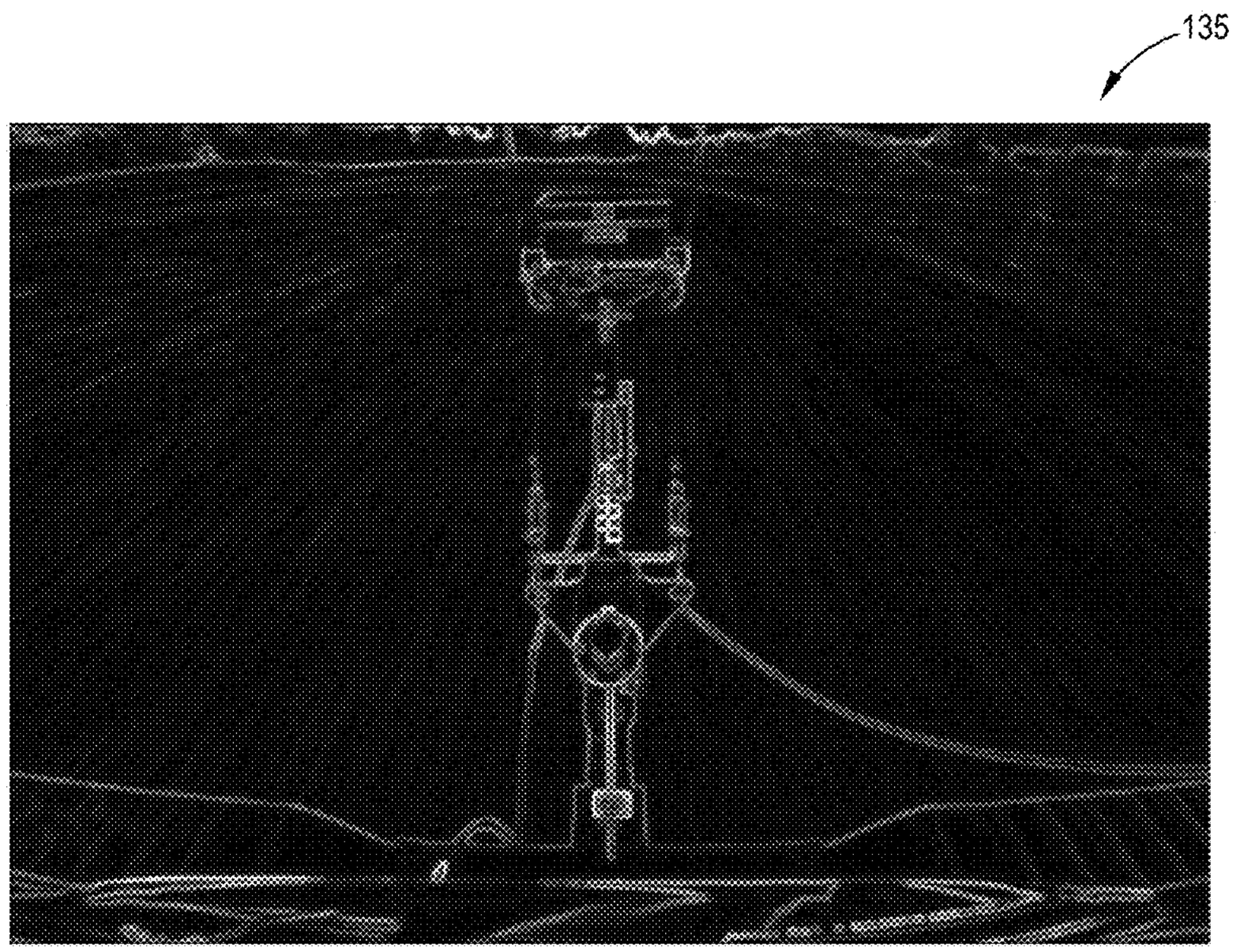

FIG. 7

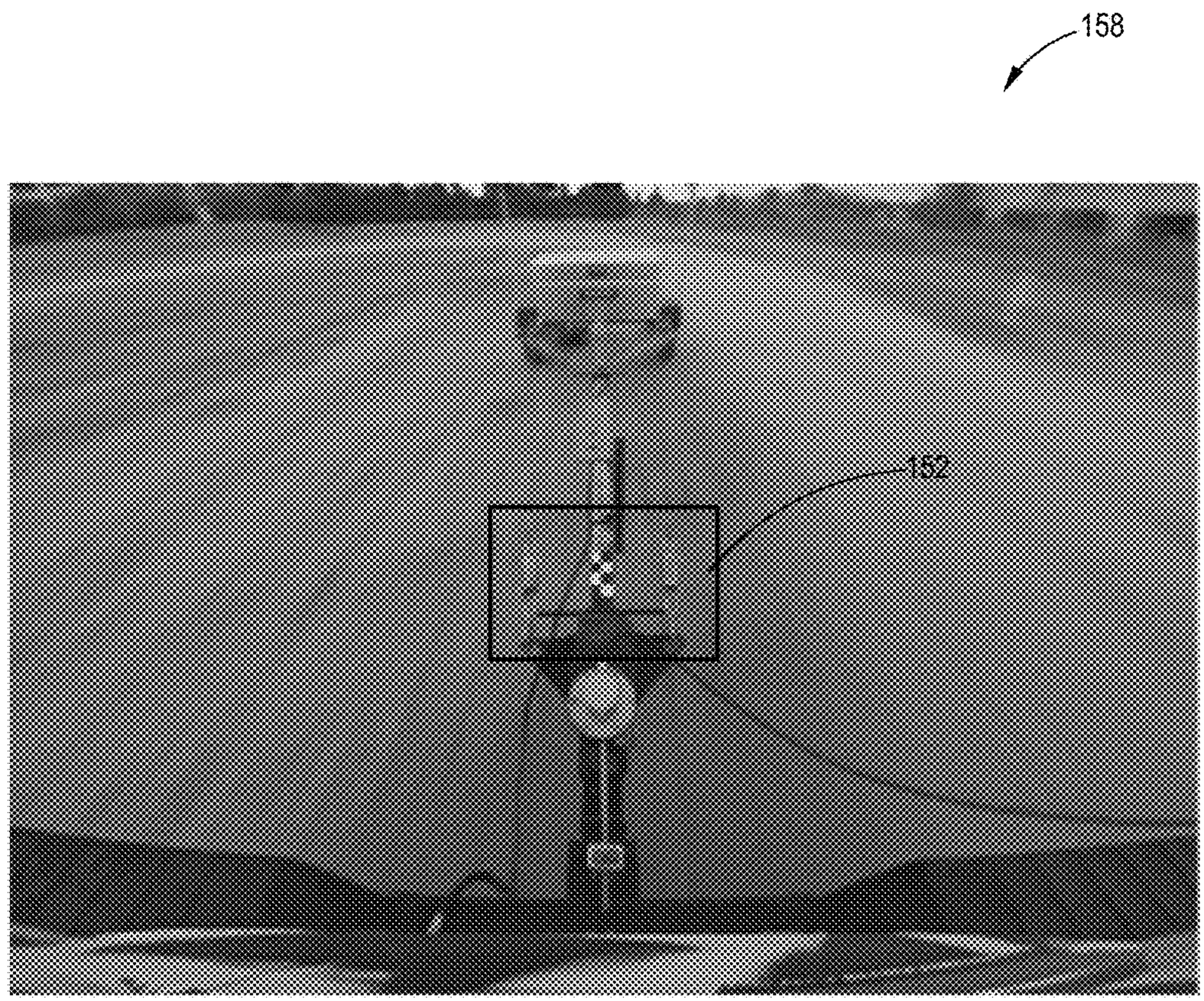

FIG. 8

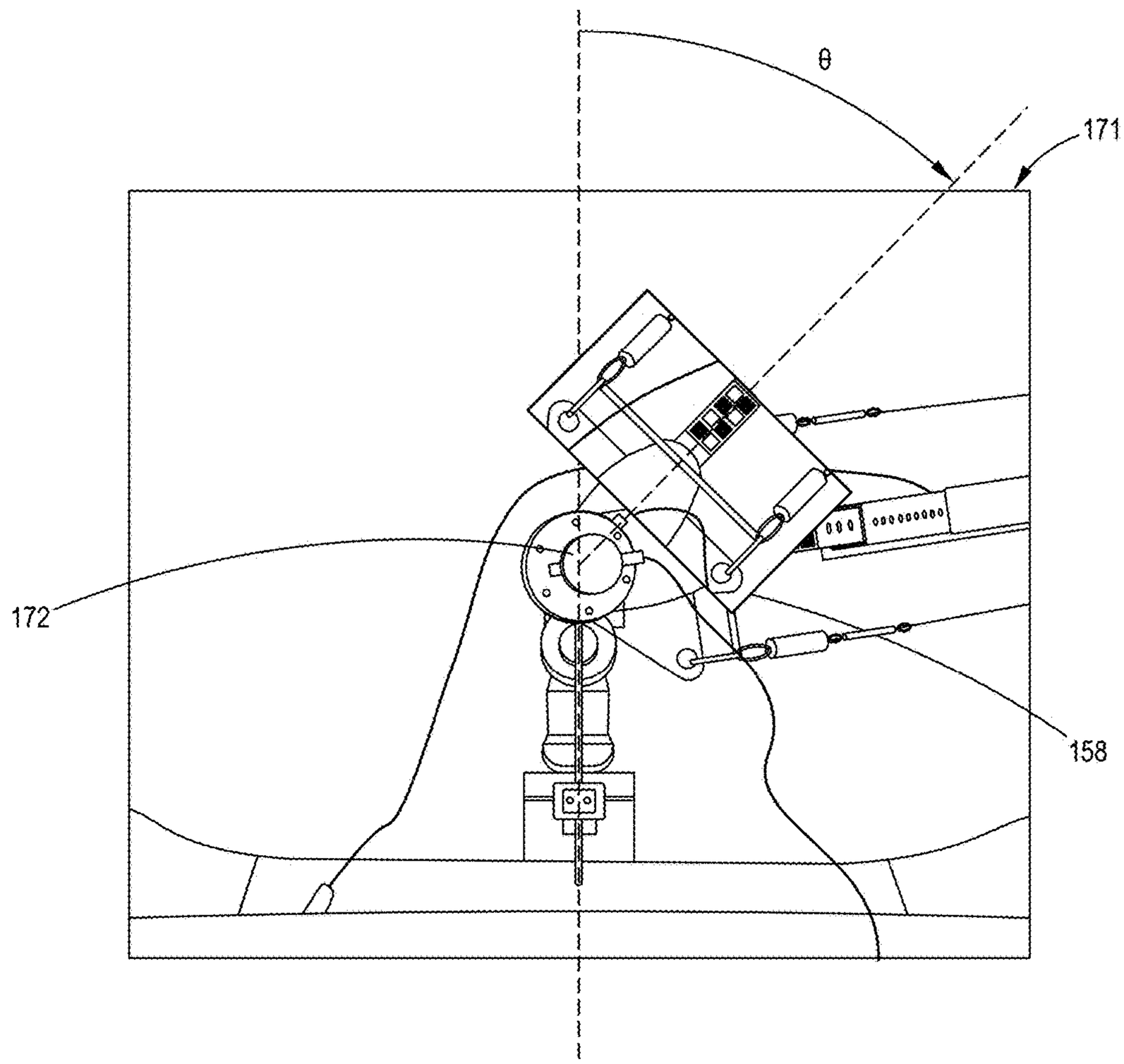

FIG. 9

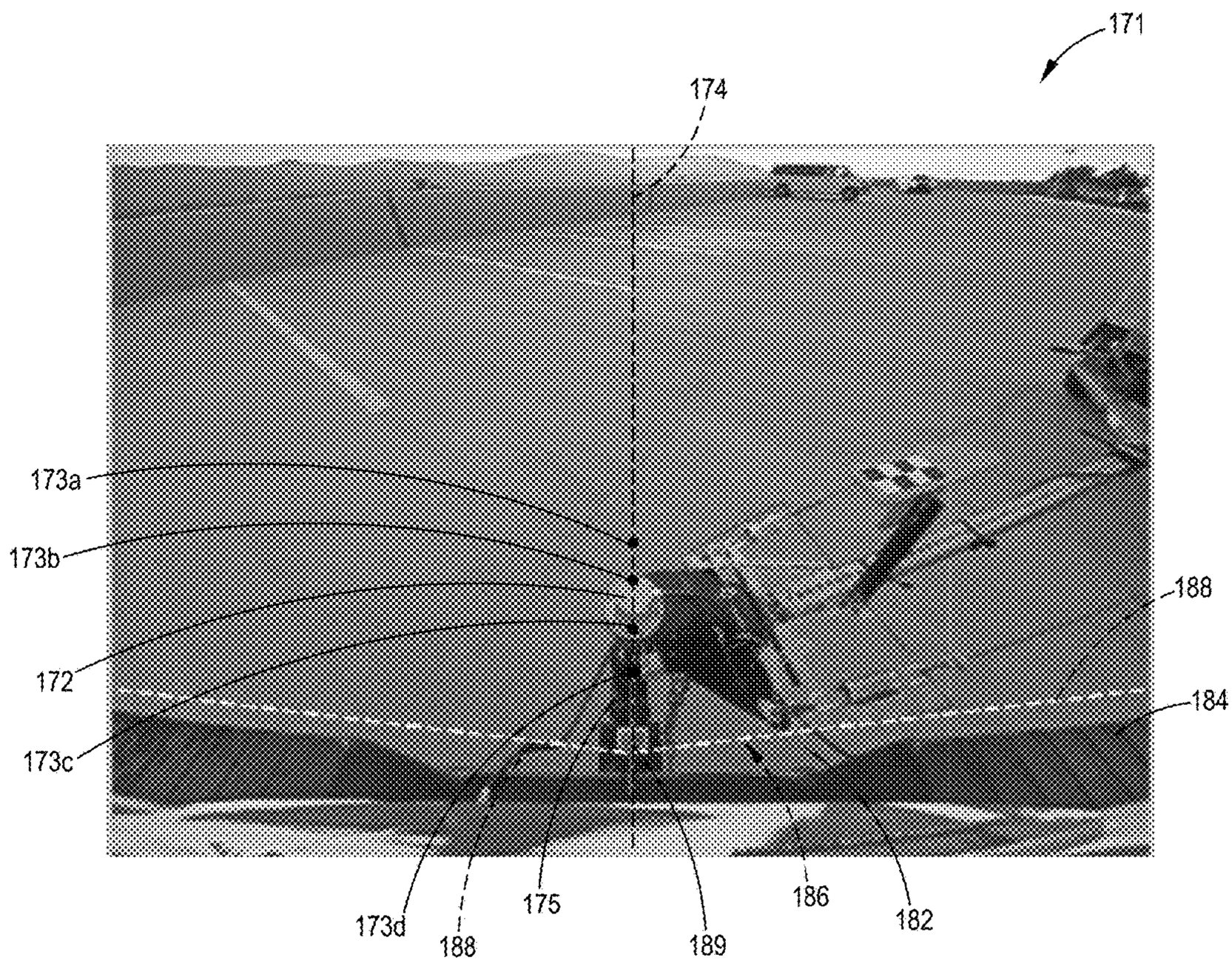

FIG. 10

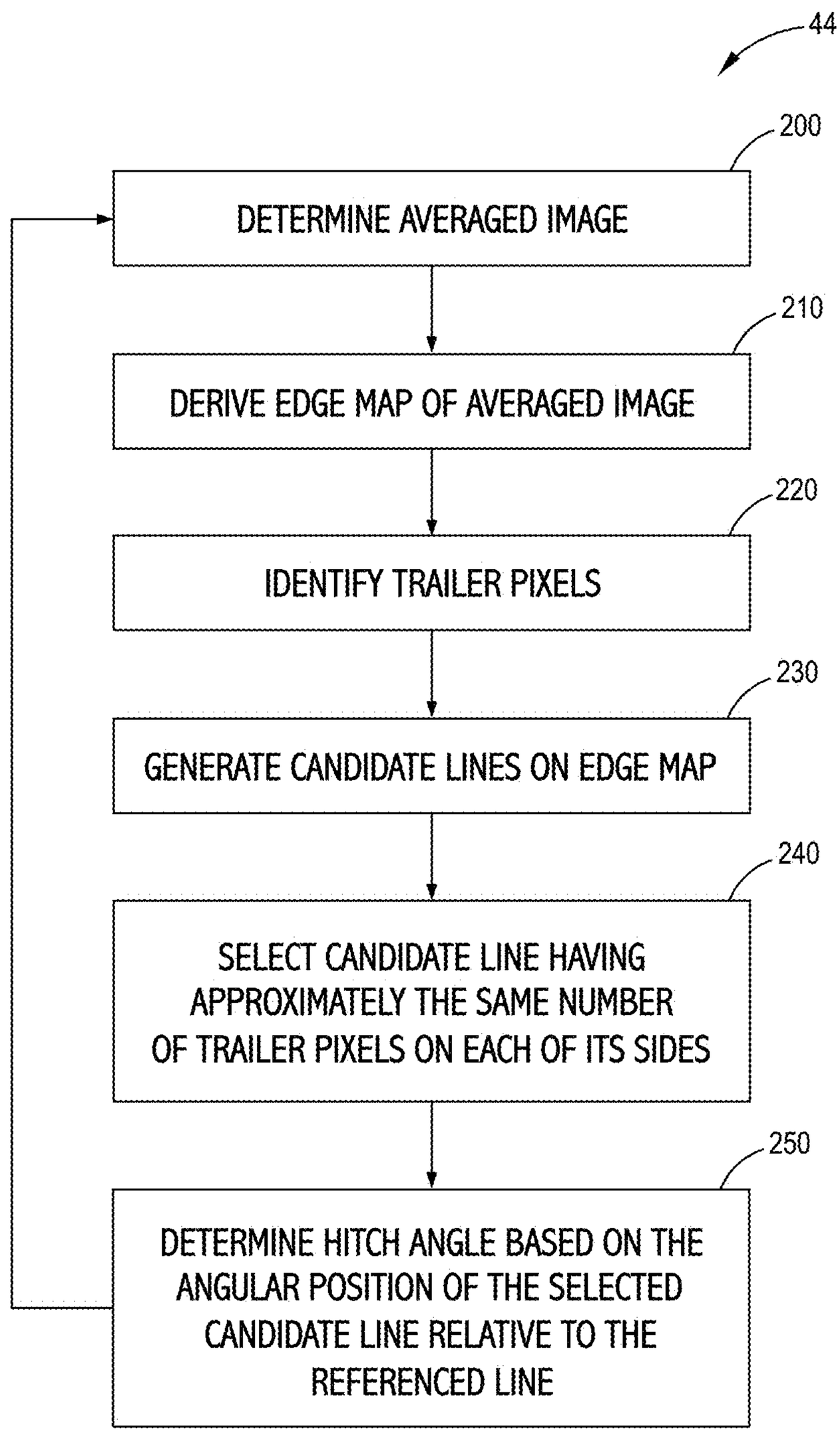
44
200
DETERMINE AVERAGED IMAGE
210
DERIVE EDGE MAP OF AVERAGED IMAGE
220
IDENTIFY TRAILER PIXELS
230
GENERATE CANDIDATE LINES ON EDGE MAP
240
SELECT CANDIDATE LINE HAVING APPROXIMATELY THE SAME NUMBER OF TRAILER PIXELS ON EACH OF ITS SIDES
250
DETERMINE HITCH ANGLE BASED ON THE ANGULAR POSITION OF THE SELECTED CANDIDATE LINE RELATIVE TO THE REFERENCED LINE

FIG. 11

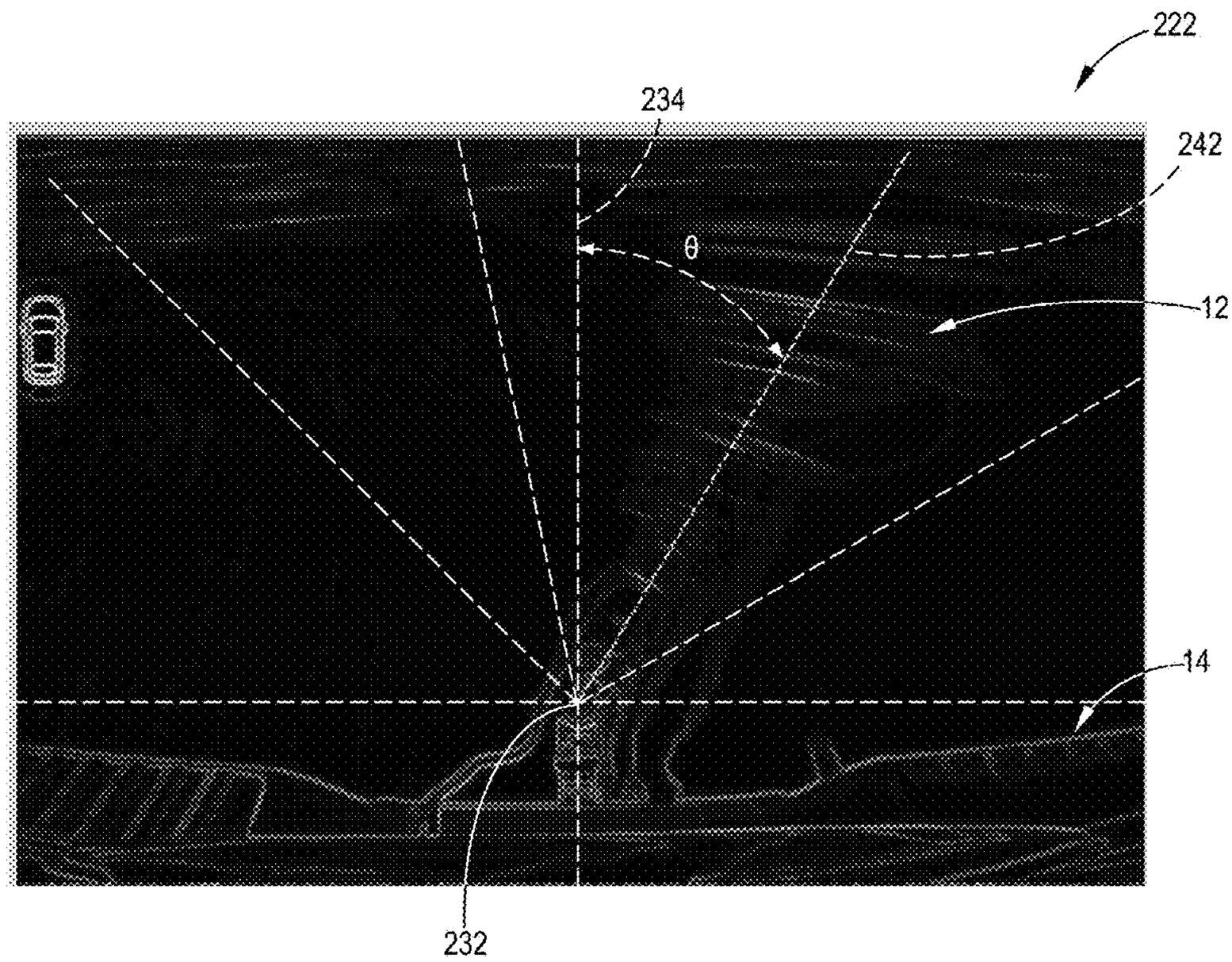

FIG. 12

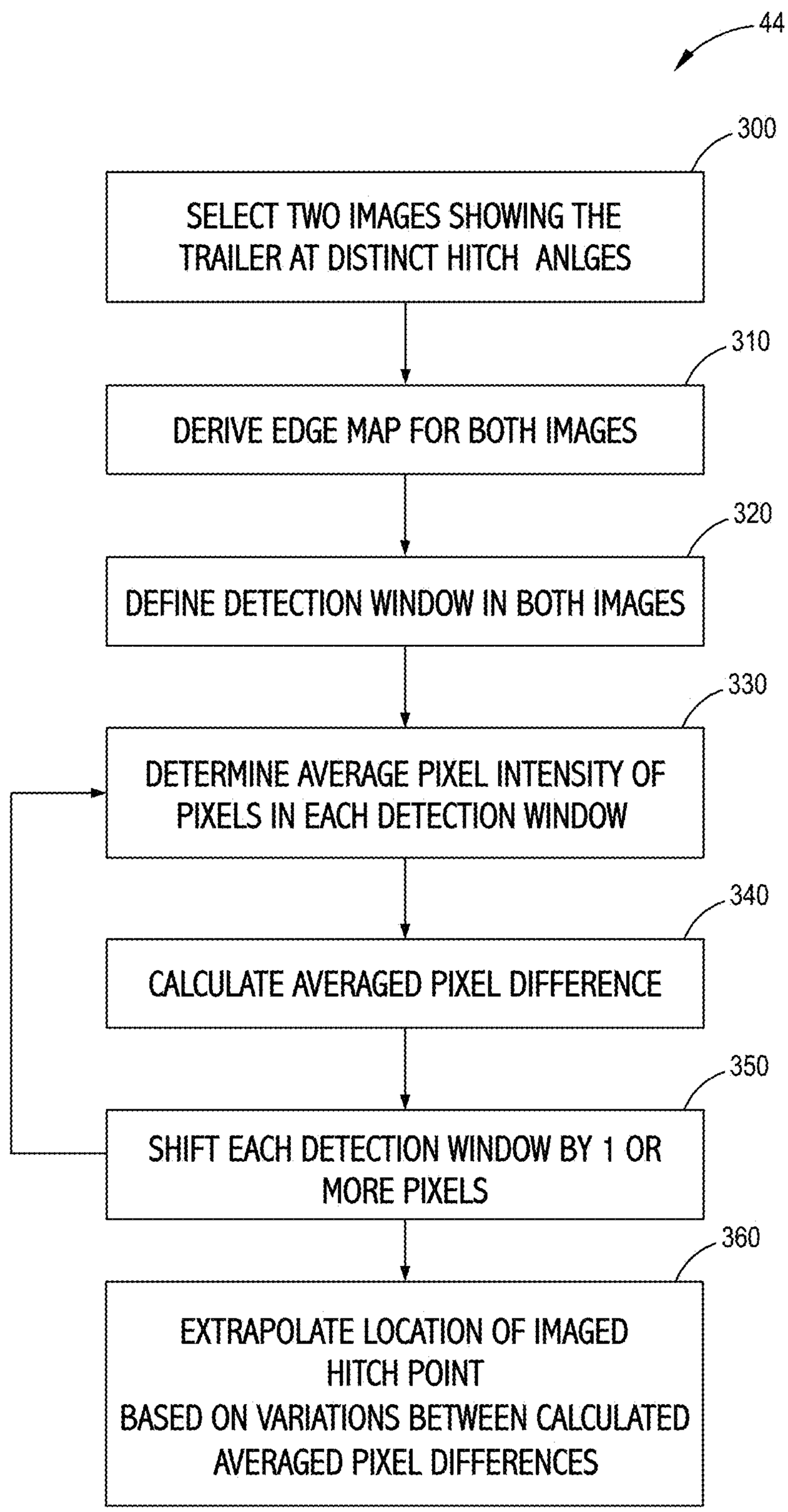
44
300
SELECT TWO IMAGES SHOWING THE TRAILER AT DISTINCT HITCH ANLGES
310
DERIVE EDGE MAP FOR BOTH IMAGES
320
DEFINE DETECTION WINDOW IN BOTH IMAGES
330
DETERMINE AVERAGE PIXEL INTENSITY OF PIXELS IN EACH DETECTION WINDOW
340
CALCULATE AVERAGED PIXEL DIFFERENCE
350
SHIFT EACH DETECTION WINDOW BY 1 OR MORE PIXELS
360
EXTRAPOLATE LOCATION OF IMAGED HITCH POINT BASED ON VARIATIONS BETWEEN CALCULATED AVERAGED PIXEL DIFFERENCES

FIG. 13

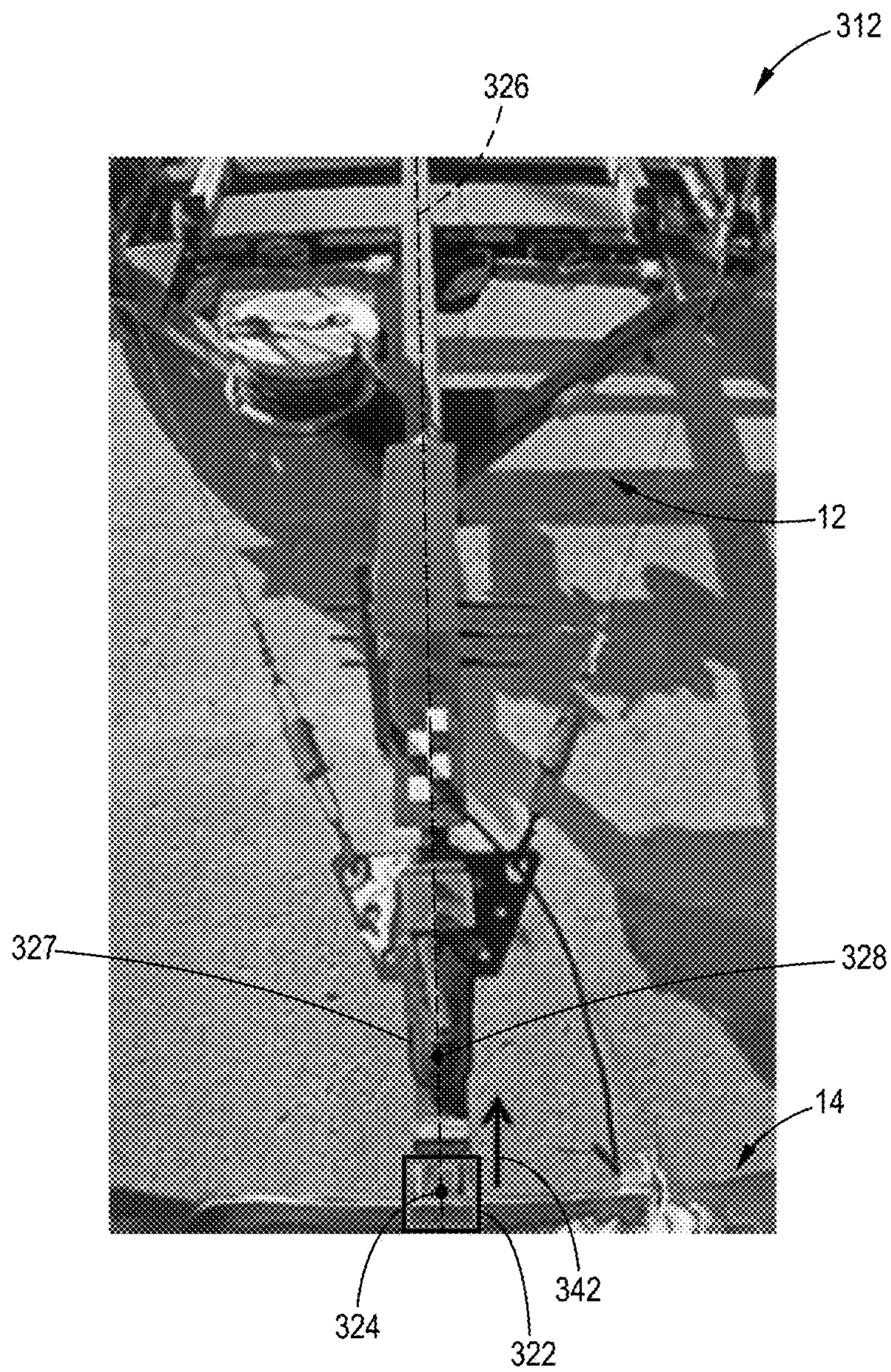

FIG. 14

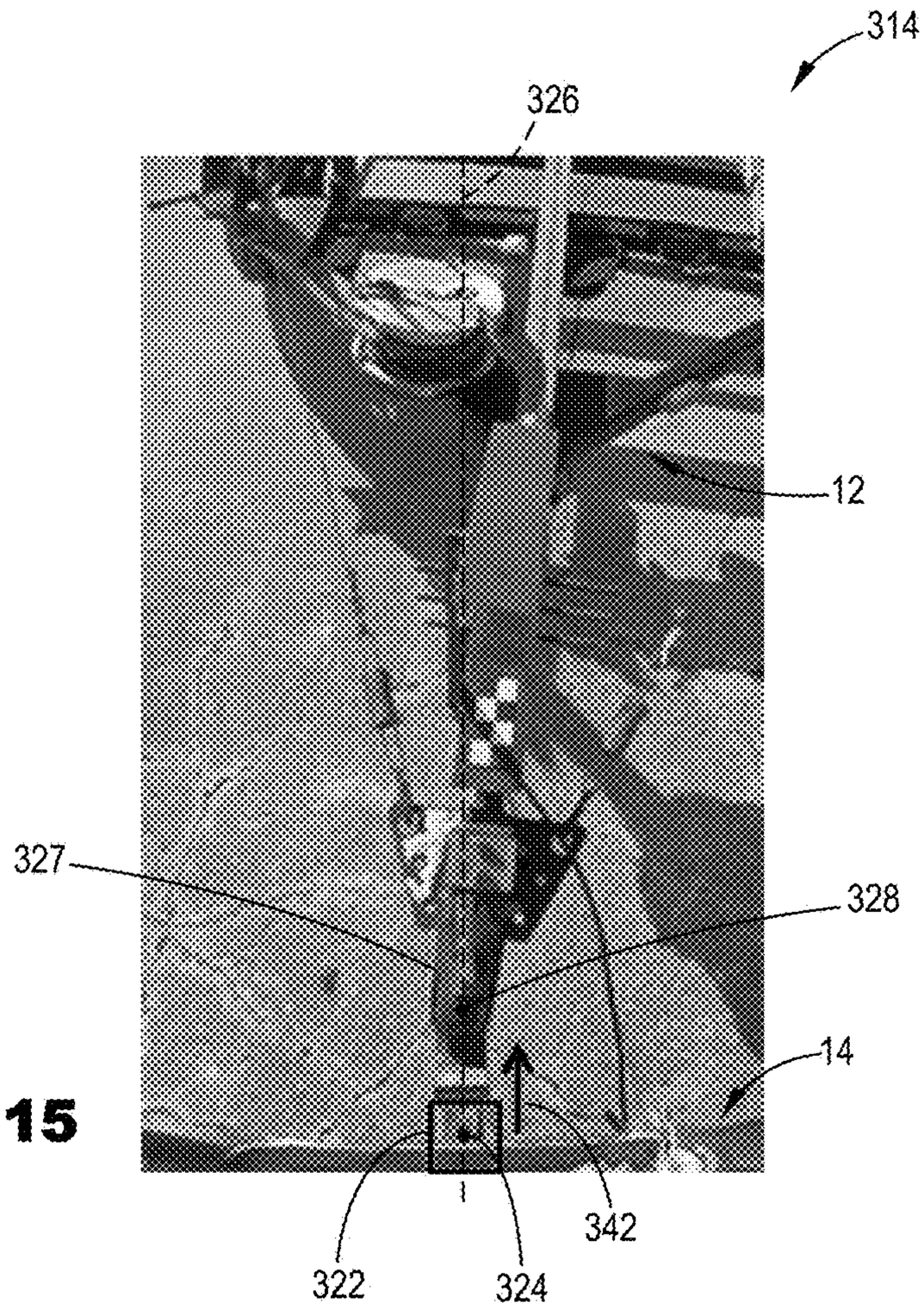
314
326
12
327
328
14
342
322
324

FIG. 15

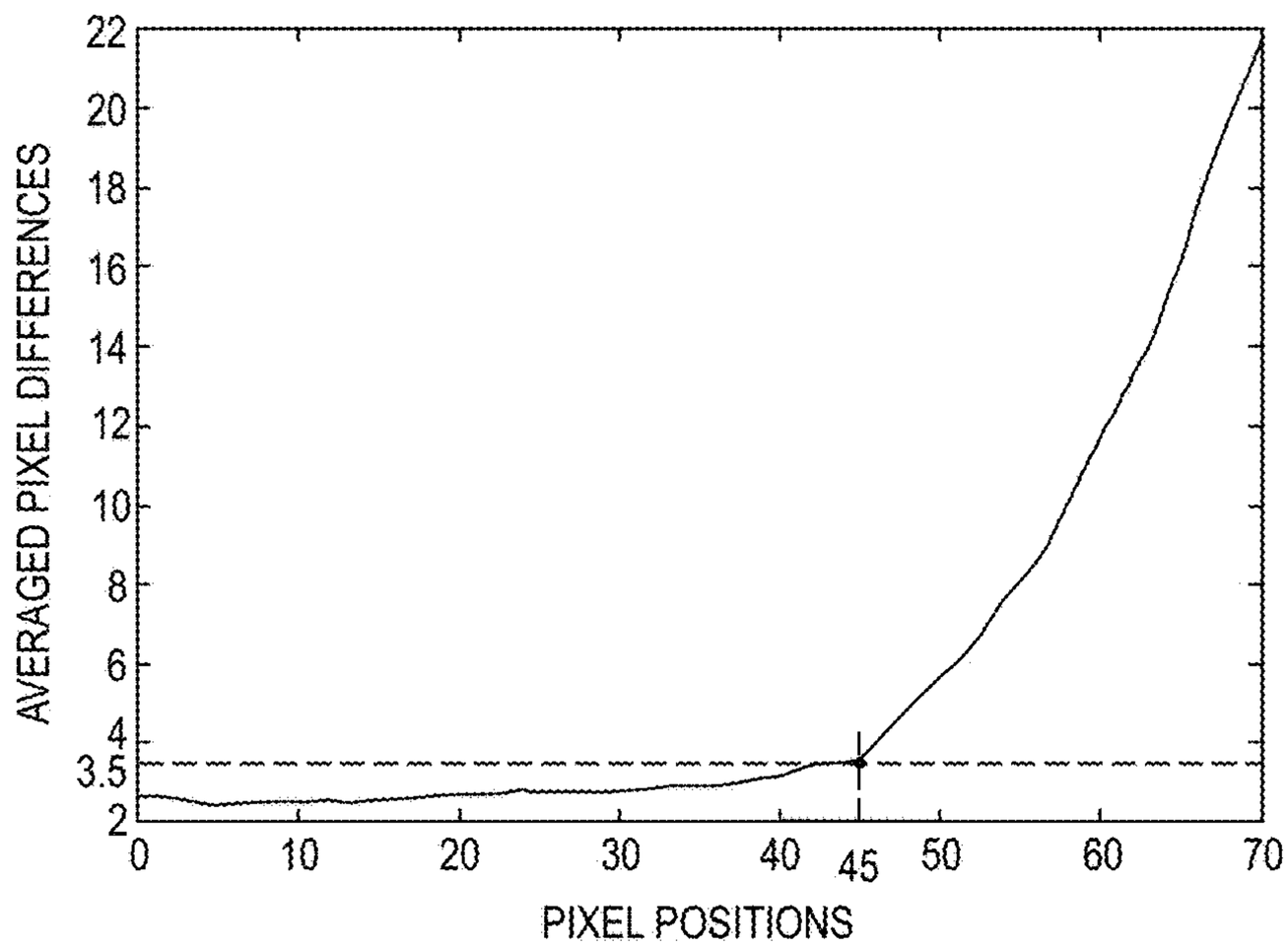
AVERAGED PIXEL DIFFERENCES
22
20
18
16
14
12
10
8
6
4
3.5
2
0
10
20
30
40
45
50
60
70
PIXEL POSITIONS

FIG. 16

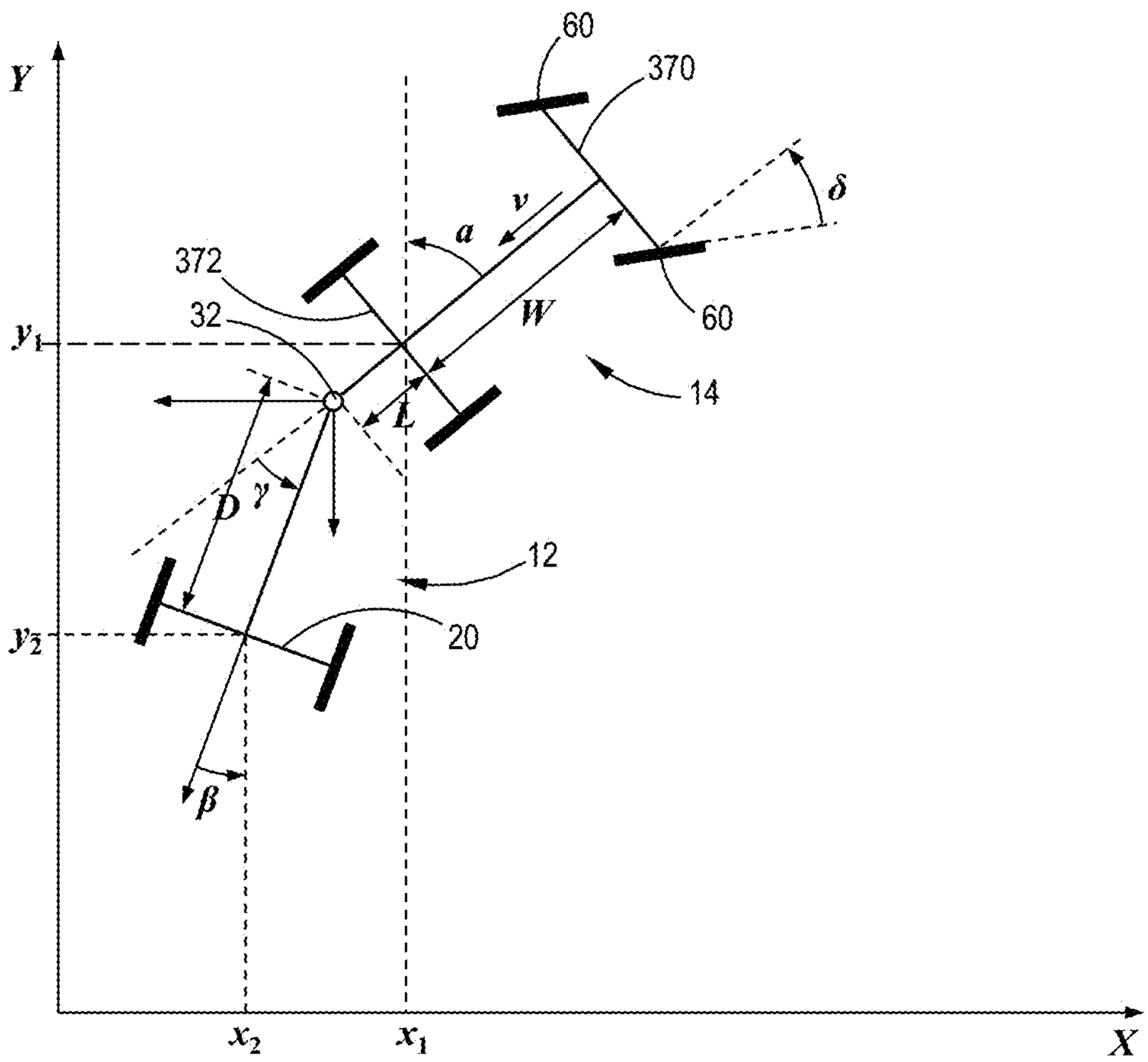

FIG. 17

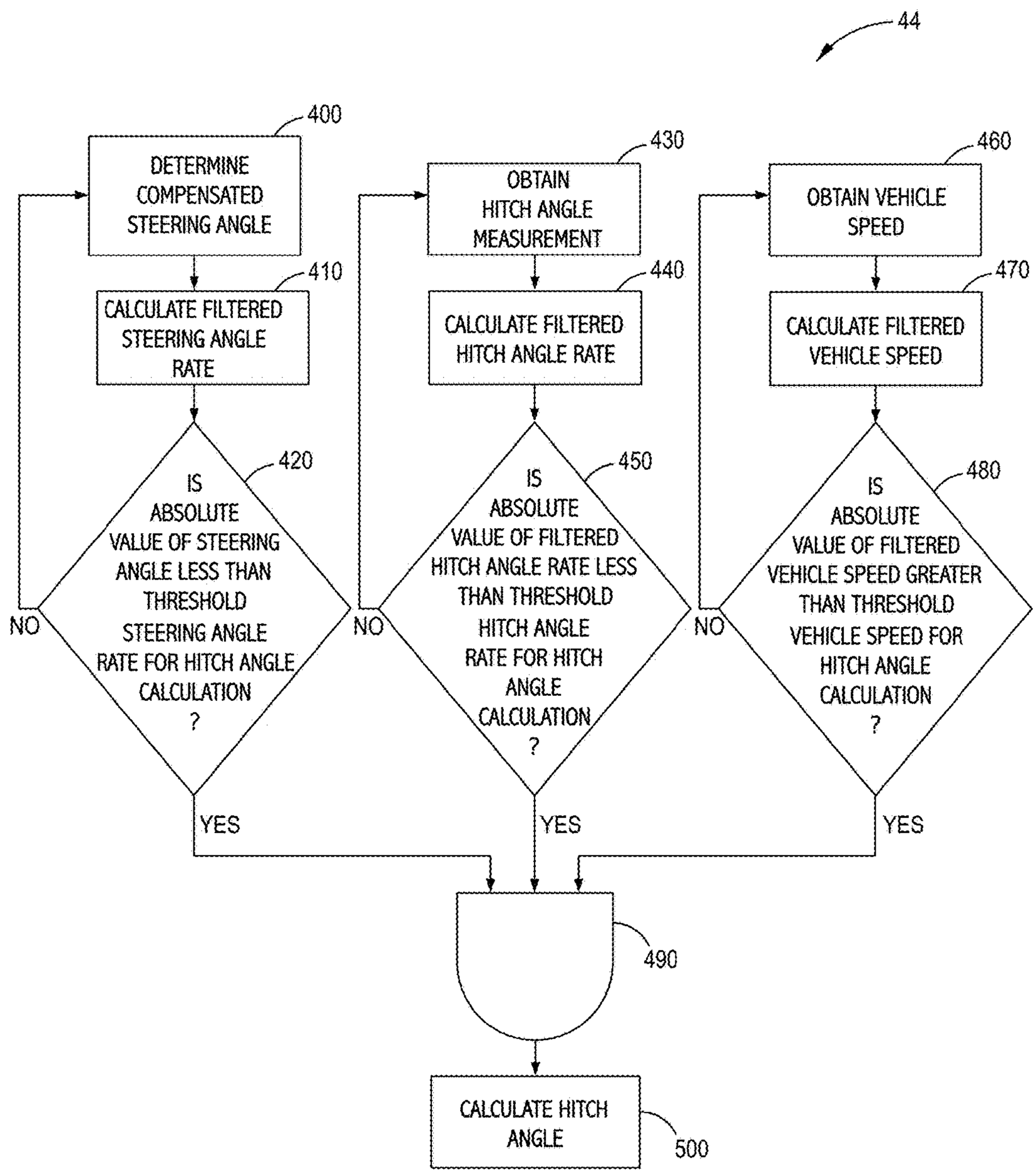
44
400
DETERMINE COMPENSATED STEERING ANGLE
410
CALCULATE FILTERED STEERING ANGLE RATE
420
IS ABSOLUTE VALUE OF STEERING ANGLE LESS THAN THRESHOLD STEERING ANGLE RATE FOR HITCH ANGLE CALCULATION ?
NO
YES
430
OBTAIN HITCH ANGLE MEASUREMENT
440
CALCULATE FILTERED HITCH ANGLE RATE
450
IS ABSOLUTE VALUE OF FILTERED HITCH ANGLE RATE LESS THAN THRESHOLD HITCH ANGLE RATE FOR HITCH ANGLE CALCULATION ?
NO
YES
460
OBTAIN VEHICLE SPEED
470
CALCULATE FILTERED VEHICLE SPEED
480
IS ABSOLUTE VALUE OF FILTERED VEHICLE SPEED GREATER THAN THRESHOLD VEHICLE SPEED FOR HITCH ANGLE CALCULATION ?
NO
YES
490
CALCULATE HITCH ANGLE
500

FIG. 18

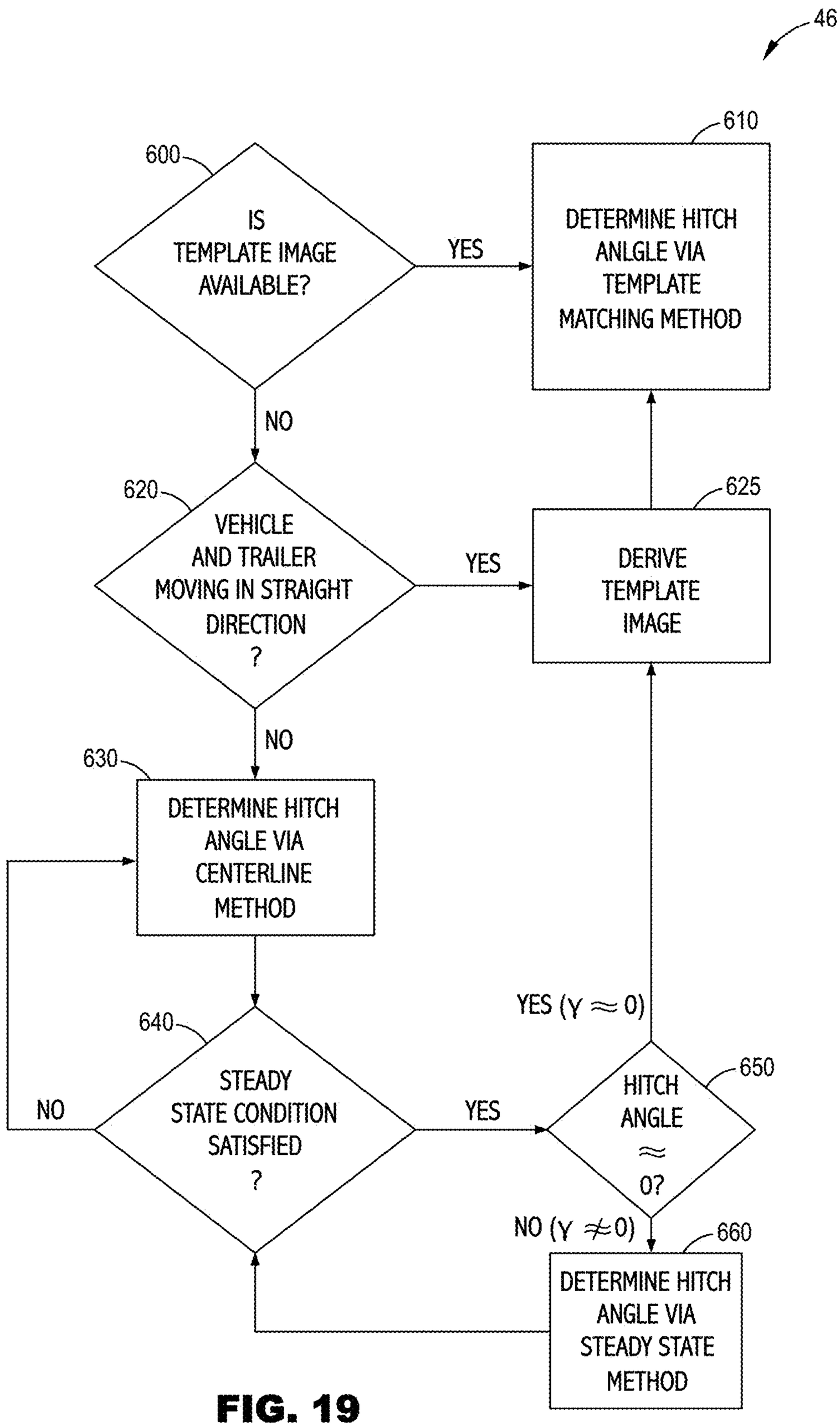
46
600
IS TEMPLATE IMAGE AVAILABLE?
YES
610
DETERMINE HITCH ANLGLE VIA TEMPLATE MATCHING METHOD
NO
620
VEHICLE AND TRAILER MOVING IN STRAIGHT DIRECTION ?
YES
625
DERIVE TEMPLATE IMAGE
NO
630
DETERMINE HITCH ANGLE VIA CENTERLINE METHOD
YES (Y ≈ 0)
640
STEADY STATE CONDITION SATISFIED ?
NO
YES
650
HITCH ANGLE ≈ 0?
NO (Y ≠ 0)
660
DETERMINE HITCH ANGLE VIA STEADY STATE METHOD

FIG. 19

HITCH ANGLE DETECTION FOR TRAILER BACKUP ASSIST SYSTEM

FIELD OF THE INVENTION

The present invention generally relates to trailer backup assist systems, and more particularly, to trailer backup assist systems employing hitch angle detection through image processing.

BACKGROUND OF THE INVENTION

Reversing a vehicle while towing a trailer can be challenging for many drivers, particularly for drivers that drive with a trailer on an infrequent basis or with various types of trailers. Some systems used to assist a driver in backing a trailer rely on hitch angle measurements to determine the position of the trailer relative to the vehicle. Thus, the accuracy and reliability of the hitch angle measurements can be critical to the operation of the trailer backup assist system.

SUMMARY OF THE INVENTION

According to one aspect of the present invention, a system for detecting a hitch angle between a vehicle and a trailer is provided. An imaging device is configured to capture images of the trailer and a controller is configured to process images captured by the imaging device. The controller derives a template image having a trailer contour and matches the template image to a search image. The hitch angle is determined based on a positional relationship between the template image and the search image.

According to another aspect of the present invention, a system for detecting a hitch angle between a vehicle and a trailer is provided. An imaging device is configured to capture images of the trailer and a controller is configured to process images captured by the imaging device. The controller derives a template image having a trailer contour and rotates the template image relative to a search image about an imaged hitch point that is common to the template image and the search image. The controller determines the hitch angle based on an angle at which the template image is rotated relative to the search image to generate a match therebetween.

According to yet another aspect of the present invention, a method for detecting a hitch angle between a vehicle and a trailer is provided. The method includes the steps of capturing images of the trailer using an imaging device and providing a controller that is configured to process images captured by the imaging device. The controller derives a template image having a trailer contour and matches the template image to a search image. The hitch angle is determined based on a positional relationship between the template image and the search image.

These and other features, advantages, and objects of the present invention will be further understood and appreciated by those skilled in the art by reference to the following specification, claims, and appended drawings.

BRIEF DESCRIPTION OF THE DRAWINGS

In the drawings:

FIG. **1** is a top perspective view of a vehicle attached to a trailer with one embodiment of a hitch angle sensor for operating a trailer backup assist system;

FIG. **2** is a block diagram illustrating one embodiment of the trailer backup assist system having a steering input device, a curvature controller, and a trailer braking system;

FIG. **3** is a flow diagram of a method of detecting a hitch angle, according to one embodiment;

FIG. **4** is a captured image showing a trailer in straight alignment with a vehicle and the presence of ground noise;

FIG. **5** is an edge map of the captured image shown in FIG. **4**;

FIG. **6** illustrates the blurring of ground noise in an averaged image;

FIG. **7** is an edge map of the averaged image shown in FIG. **6**;

FIG. **8** illustrates a trailer contour of a template image;

FIG. **9** illustrates a template image being matched to a search image to determine a hitch angle;

FIG. **10** is a search image having a proximity zone for jackknife detection and a number of candidate hitch point locations about which a template image can be rotated to determine an actual imaged hitch point and a hitch angle;

FIG. **11** is a flow diagram of a method of detecting a hitch angle, according to another embodiment;

FIG. **12** is an edge map of a captured image showing a number of candidate lines, one of which, is selected to determine a hitch angle based on its angular position relative to a reference line;

FIG. **13** is a flow diagram of a method of locating an imaged hitch point, according to one embodiment;

FIGS. **14** and **15** are each captured images in which a trailer appears at a distinct hitch angle and a detection window is used to scan an imaged drawbar to locate an imaged hitch point;

FIG. **16** is a graph illustrating averaged pixel differences for a number of pixel positions common to the captured images shown in FIGS. **14** and **15**;

FIG. **17** is a kinematic model of the vehicle and trailer shown in FIG. **1**;

FIG. **18** is a flow diagram of a method of detecting a hitch angle, according to yet another embodiment; and

FIG. **19** is a flow diagram of a method of initializing hitch angle detection, according to one embodiment.

DETAILED DESCRIPTION OF THE PREFERRED EMBODIMENTS

For purposes of description herein, it is to be understood that the disclosed trailer backup assist system and the related methods may assume various alternative embodiments and orientations, except where expressly specified to the contrary. It is also to be understood that the specific devices and processes illustrated in the attached drawings, and described in the following specification, are simply exemplary embodiments of the inventive concepts defined in the appended claims. While various aspects of the trailer backup assist system and the related methods are described with reference to a particular illustrative embodiment, the disclosed invention is not limited to such embodiments, and additional modifications, applications, and embodiments may be implemented without departing from the disclosed invention. Hence, specific dimensions and other physical characteristics relating to the embodiments disclosed herein are not to be considered as limiting, unless the claims expressly state otherwise.

As used herein, the term "and/or," when used in a list of two or more items, means that any one of the listed items can be employed by itself, or any combination of two or more of the listed items can be employed. For example, if a com-

position is described as containing components A, B, and/or C, the composition can contain A alone; B alone; C alone; A and B in combination; A and C in combination; B and C in combination; or A, B, and C in combination.

Referring to FIGS. **1** and **2**, reference numeral **10** generally designates a trailer backup assist system for controlling a backing path of a trailer **12** attached to a vehicle **14** by allowing a driver of the vehicle **14** to specify a desired curvature of the backing path of the trailer **12**. The vehicle **14** is embodied as a pickup truck that is is pivotally attached to one embodiment of the trailer **12** that has a box frame **16** with an enclosed cargo area **18**, a single axle **20** operably coupled to wheels **22** and **24**, and a tongue **26** longitudinally extending forward from the enclosed cargo area **18**. The illustrated trailer **12** also has a trailer hitch connector in the form of a coupler assembly **28** that is connected to a vehicle hitch connector in the form of a hitch ball **30** and drawbar **31**. The coupler assembly **28** latches onto the hitch ball **30** to provide a pivoting hitch point **32** that allows for articulation of a hitch angle between the vehicle **14** and the trailer **12**. As defined herein, the hitch angle corresponds to the angle formed between the center longitudinal axis of the vehicle **14** and of the trailer **12** (see hitch angle γ; FIG. **17**). It should be appreciated that additional embodiments of the trailer **12** may alternatively couple with the vehicle **14** to provide a pivoting connection, such as by connecting with a fifth wheel connector. It is also contemplated that additional embodiments of the trailer **12** may include more than one axle and may have various shapes and sizes configured for different loads and items, such as a boat trailer or a flatbed trailer.

The trailer backup assist system **10** also includes an imaging device **34** located at the rear of the vehicle **14** and configured to image a rear-vehicle scene. The imaging device **34** may be centrally located at an upper region of a vehicle tailgate **35** such that the imaging device **34** is elevated relative to the tongue **26** of the trailer **12**. The imaging device **34** has a field of view **36** located and oriented to capture one or more images that may include the tongue **26** of the trailer **12** and the hitch ball **30**, among other things. Captured images are supplied to a controller **38** of the trailer backup assist system **10** and are processed by the controller **38** to determine the hitch angle between the vehicle **14** and the trailer **12**, as will be described in greater detail herein. The controller **38** is configured with a microprocessor **40** and/or other analog and/or digital circuitry for processing one or more logic routines stored in a memory **42**. The logic routines may include one or more hitch angle detection routines **44** and an operating routines **46**. Information from the imaging device **34** or other components of the trailer backup assist system **10** can be supplied to the controller **38** via a communication network of the vehicle **14**, which can include a controller area network (CAN), a local interconnect network (LIN), or other conventional protocols used in the automotive industry. It should be appreciated that the controller **38** may be a stand-alone dedicated controller or may be a shared controller integrated with the imaging device **34** or other component of the trailer backup assist system **10** in addition to any other conceivable onboard or off-board vehicle control systems.

With respect to the present embodiment, the controller **38** of trailer backup assist system **10** may be configured to communicate with a variety of vehicle equipment. The trailer backup assist system **10** may include a vehicle sensor module **48** that monitors certain dynamics of the vehicle **14**. The vehicle sensor module **48** may generate a plurality of signals that are communicated to the controller **38** and may include a vehicle speed signal generated by a speed sensor **50** and a vehicle yaw rate signal generated by a yaw rate sensor **52**. A steering input device **54** may be provided to enable a driver to control or otherwise modify the desired curvature of the backing path of the trailer **12**. The steering input device **54** may be communicatively coupled to the controller **38** in a wired or wireless manner and provides the controller **38** with information defining the desired curvature of the backing path of the trailer **12**. In response, the controller **38** processes the information and generates corresponding steering commands that are supplied to a power assist steering system **56** of the vehicle **14**. In one embodiment, the steering input device **54** includes a rotatable knob **58** operable between a number of rotated positions that each provide an incremental change to the desired curvature of the backing path of the trailer **12**.

According to one embodiment, the controller **38** of the trailer backup assist system **10** may control the power assist steering system **56** of the vehicle **14** to operate the steered wheels **60** of the vehicle **14** for moving the vehicle **14** in such a manner that the trailer **12** reacts in accordance with the desired curvature of the backing path of the trailer **12**. The power assist steering system **56** may be an electric power-assisted steering (EPAS) system that includes an electric steering motor **62** for turning the steered wheels **60** to a steering angle based on a steering command generated by the controller **38**, whereby the steering angle may be sensed by a steering angle sensor **64** of the power assist steering system **56** and provided to the controller **38**. The steering command may be provided for autonomously steering the vehicle **14** during a backup maneuver and may alternatively be provided manually via a rotational position (e.g., a steering wheel angle) of a steering wheel **66** or the rotatable knob **58**. However, in some embodiments, the steering wheel **66** of the vehicle **14** may be mechanically coupled with the steered wheels **60** of the vehicle **14**, such that the steering wheel **66** moves in concert with steered wheels **60** via an internal torque, thereby preventing manual intervention with the steering wheel **66** during autonomous steering of the vehicle **14**. In such instances, the power assist steering system **56** may include a torque sensor **68** that senses torque (e.g., gripping and/or turning) on the steering wheel **66** that is not expected from autonomous control of the steering wheel **68** and therefore indicative of manual intervention by the driver. In some embodiments, external torque applied to the steering wheel **66** may serve as a signal to the controller **38** that the driver has taken manual control and for the trailer backup assist system **10** to discontinue autonomous steering functionality.

The controller **38** of the trailer backup assist system **10** may also communicate with a vehicle brake control system **70** of the vehicle **14** to receive vehicle speed information such as individual wheel speeds of the vehicle **14**. Additionally or alternatively, vehicle speed information may be provided to the controller **38** by a powertrain control system **72** and/or the speed sensor **50**, among other conceivable means. It is conceivable that individual wheel speeds may be used to determine a vehicle yaw rate, which can be provided to the controller **38** in the alternative, or in addition to, the vehicle yaw rate measured by yaw rate sensor **52** of the vehicle sensor module **48**. In some embodiments, the controller **38** may provide braking commands to the vehicle brake control system **70**, thereby allowing the trailer backup assist system **10** to regulate the speed of the vehicle **14** during a backup maneuver of the trailer **12**. It should be appreciated that the controller **38** may additionally or alter-

natively regulate the speed of the vehicle **14** via interaction with the powertrain control system **72**.

Through interaction with the power assist steering system **56**, the vehicle brake control system **70**, and/or the powertrain control system **72** of the vehicle **14**, the potential for unacceptable trailer backup conditions can be reduced. Examples of unacceptable trailer backup conditions include, but are not limited to, a vehicle over-speed condition, a high hitch angle rate, hitch angle dynamic instability, a trailer jackknife condition, sensor failure, and the like. In such circumstances, the driver may be unaware of the failure until the unacceptable trailer backup condition is imminent or already happening. Therefore, it is disclosed herein that the controller **38** of the trailer backup assist system **10** can generate an alert signal corresponding to a notification of an actual, impending, and/or anticipated unacceptable trailer backup condition, and prior to driver intervention, generate a counter measure to prevent such an unacceptable trailer backup condition.

According to one embodiment, the controller **38** may communicate with one or more devices, including a vehicle alert system **74**, which may prompt visual, auditory, and tactile warnings. For instance, vehicle brake lights **76** and vehicle emergency flashers may provide a visual alert and a vehicle horn **78** and/or speaker **80** may provide an audible alert. Additionally, the controller **38** and/or vehicle alert system **74** may communicate with a human machine interface (HMI) **82** of the vehicle **14**. The HMI **82** may include a touchscreen vehicle display **84** such as a center-stack mounted navigation or entertainment display capable of displaying images indicating the alert. Such an embodiment may be desirable to notify the driver of the vehicle **14** that an unacceptable trailer backup condition is afoot. Further, it is contemplated that the controller **38** may communicate via wireless communication with one or more electronic portable devices such as portable electronic device **86**, which is embodied as a smartphone. The portable electronic device **86** may include a display **88** for displaying one or more images and other information to a user. In response, the portable electronic device **86** may provide feedback information, such as visual, audible, and tactile alerts.

Referring to FIG. **3**, a method of detecting hitch angle is illustrated. The method, also referred to herein as "the template matching method," may be executed by the controller **38** of the trailer backup assist system **10** and is shown as one embodiment of the hitch angle detection routine **44**. The template matching method generally includes processing image information to distinguish trailer contour from ground noise in images captured by the imaging device **34**. The trailer contour then serves as a template and is matched to a search image to determine the hitch angle between the vehicle **14** and the trailer. **12**

For purposes of illustration, a captured image **90** is exemplarily shown in FIG. **4** illustrating the trailer **12** in straight alignment with the vehicle **14** and the presence of ground noise. As defined herein, ground noise generally corresponds to any ground structure capable of interfering with image acquisition of the trailer **12**. With respect to the captured image **90**, potential ground noise candidates may include large stones (e.g., stone **92**) and irregular ground surfaces (e.g., ground surface **94**). As such, it may be difficult to accurately identify the trailer **12** when an image acquisition technique, namely edge detection, is applied to the captured image **90**, as exemplarily shown in FIG. **5**. With these things in mind, the template matching method described herein is able to blur out ground noise to enable identification of one or more trailer contours. Once identified, the trailer contour(s) may be stored as a template image that is matched to a search image to determine the hitch angle between the vehicle **14** and the trailer **12**. In practice, the method has been found highly robust and benefits from relatively fast and straightforward computations.

The template matching method may begin at step **100**, where the driver or other occupant initiates the trailer backup assist system **10**. This may be achieved via user-input made through the display **84** of the vehicle **14** or other conceivable means. At step **110**, the driver is instructed to pull the trailer **12** in a straight direction such that the hitch angle between the vehicle **14** and the trailer **12** is substantially zero. While the vehicle **14** and trailer **12** are engaged in the straight pull maneuver, the controller **38** derives an averaged image of all images captured by the imaging device **34** during a period of time at step **120**. It has been discovered that 1-3 seconds typically suffices. Notably, the trailer **12** appears stationary within the images captured by the imaging device **34** whereas ground noise constantly changes from image to image. Thus, with respect to the averaged image, pixels associated with the trailer **12** will keep their contrast whereas pixels associated with ground noise will be blurred. To illustrate this effect, an averaged image **125** is exemplarily shown in FIG. **6**.

At step **130**, the controller **38** derives an edge map of the averaged image by calculating the intensity gradient for each pixel of the averaged image **125**. The intensity gradient, or edge value, of each pixel may range from 0 to 255. For purposes of illustration, an edge map **135** is exemplarily shown in FIG. **7**, in which the edge values of pixels associated with ground noise have been substantially weakened due to the blurring effect. At step **140**, the controller **38** compares the edge value of each pixel of the edge map **135** to a threshold value (e.g., 30). Pixels having an edge value meeting or exceeding the threshold value are identified as trailer pixels whereas pixels having an edge value not meeting or exceeding the threshold value are identified as ground noise pixels. Once the trailer pixels have been identified, the controller **38** determines one or more trailer contours at step **150**. The trailer contour(s) are saved to the memory **42** of the controller **38** as a template image at step **160** and may include a substantial entirety of the imaged trailer **12** or portions thereof. For purposes of illustration, a trailer contour **152** is shown in FIG. **8**. As shown, the trailer contour **152** has a square shape, which is generally more computationally efficient. In its current position, the trailer contour **152** may serve as a zero hitch angle reference and enables the hitch angle between the vehicle **14** and the trailer **12** to be determined in subsequent images (i.e., search images) via template matching at step **170**.

According to one embodiment, as shown in FIG. **9**, the hitch angle between the vehicle **14** and the trailer **12** may be determined based on a positional relationship between a template image **158** and a search image **171**. More specifically, the hitch angle may be determined by superimposing the template image **158** over the search image **171** such that the template image **158** is initially in a zero hitch angle position and subsequently rotating the template image **158** about a rotation point, preferably the imaged hitch point **172**. The direction of rotation can be predicted based on information received from the steering angle sensor **64** or other sensors from which an initial assessment can be made concerning the angular position of the trailer **12** relative to the vehicle **14**. Once the template image **158** has been matched to the search image **171**, the angle θ at which the

template image **158** is rotated relative to the zero hitch angle position can be correlated to the hitch angle between the vehicle **14** and the trailer **12**.

According to one embodiment, the imaged hitch point **172** may be determined through process of elimination. For instance, as exemplarily shown in FIG. **10**, the controller **38** may define a number of candidate hitch point locations **173***a*-**173***d* that are positioned along a reference line **174** that extends vertically across the middle column of the search image **171**. The reference line **174** is defined by the controller **38** and is assumed to coincide with the center longitudinal axis of an imaged drawbar **175** and intersect with the hitch point **172** of the imaged vehicle **14** and trailer **12**. The candidate hitch point locations **173***a*-**173***d* are shown evenly spaced along the reference line **174** but may vary in number and spacing in other embodiments. Once the template image **158** has been derived and the vehicle **14** and trailer **12** are moving along a curved path, the controller **38** may superimpose the template image **158** onto the search image **171** at the zero hitch angle position and rotate the template image **158** about each of the candidate hitch point locations **173***a*-**173***d* in an attempt to match the template image **158** with the search image **171**. Based on the match quality, a confidence score is given to each candidate hitch point location **173***a*-**173***d* and the candidate hitch point location **173***a*-**173***d* receiving the highest confidence score is selected as the hitch point. In the event the matching quality associated with each candidate hitch point location **173***a*-**173***d* is below a predetermined threshold, the controller **38** may define additional candidate hitch point locations (not shown) along the reference line **174** in either or both directions of the candidate hitch point location **173***a*-**173***d* that received the highest confidence score and execute template matching with respect to each of the additional candidate hitch point locations. This process may be iterated as many times as needed until the predetermined threshold has been met. In so doing, the location of the candidate hitch point location that is ultimately selected as the imaged hitch point will closely mirror the location of the actual hitch point **172**.

While matching the template image **158** to the search image **171**, the controller **38** may additionally determine the presence of an imminent jackknife scenario at step **180**. With continued reference to FIG. **10**, the displacement of the template image **158** may be monitored relative to a proximity zone **182** while the template image **158** is rotated about the rotation point. In the illustrated embodiment, the proximity zone **182** may be defined as the space between an imaged rear bumper **184** of the vehicle **14** and a boundary line **186** that is defined by the controller **38** and overlaid onto the search image **171**. The boundary line **186** may be v-shaped and includes a pair of straight segments **188** extending outwardly at an angle from a point **189** that is located on the reference line **174** and is disposed between the imaged hitch point **172** and the imaged rear bumper **184**. It should be appreciated that the boundary line **186** may assume other shapes in alternative embodiments. The location and shape of the boundary line **186** may be determined based on various considerations such as, but not limited to, vehicle speed, trailer length, drawbar length, imager characteristics, trailer contour, and vehicle contour. It is generally assumed that vehicle speed, trailer length, drawbar length, and image characteristics are known or may be otherwise measured and inputted to the trailer backup assist system **10**. Vehicle contour, such as that of the imaged rear bumper **184**, may be programmed at the factory.

In the event the template image **158** crosses into the proximity zone **182** of the search image **171**, the controller **38** determines that an imminent jackknife scenario is present and initiates a jackknife countermeasure at step **190**. Otherwise, if it is determined that an imminent jackknife scenario is not present, the controller **38** may continue to determine the hitch angle between the vehicle **14** and the trailer **12**, as discussed previously with respect to step **170**. The jackknife countermeasure may include generating an auditory warning via the vehicle alert system **74**, generating a visual warning via the display **84**, generating a braking command to the vehicle brake control system **70**, reducing the torque of the powertrain control system **72**, modifying the steering angle of the vehicle **14**, or a combination thereof in addition to any other conceivable countermeasures. Since the trailer **12** will likely be in motion upon the controller **38** determining that an imminent jackknife scenario is present, it is generally desirable to locate and dimension the proximity zone **182** in a manner that provides sufficient time for a jackknife scenario to be detected and a countermeasure to be implemented, thereby minimizing the potential of an actual jackknifing and/or collision between the trailer **12** and the vehicle **14**. Doing so also overcomes any response latency that may be inherent in the trailer backup assist system **10**. While steps **170** and **180** have been illustrated in a linear fashion, it should be appreciated that both steps may be performed simultaneously.

Referring to FIG. **11**, another method of detecting hitch angle is illustrated. The method, also referred to herein as "the centerline method," may be executed by the controller **38** of the trailer backup assist system **10** and is exemplarily shown as one embodiment of the hitch angle detection routine **44**. The centerline method also utilizes image information obtained by processing images captured by the imaging device **34** to determine the hitch angle between the vehicle **14** and the trailer **12**. The centerline method differs from the template matching method in that the vehicle **14** and the trailer **12** need not be moving a straight direction prior to hitch angle detection, thus making the centerline method particularly useful in instances where no template image is available for the trailer **12** and the driver is prevented from pulling the trailer **12** in a straight line. When compared to the template matching method, the centerline method generally benefits from faster processing times, but is also generally less reliable. Therefore, it can be said that the centerline method provides a quick start to hitch angle detection and may be replaced at a later time by the template matching method or other suitable methods providing more reliable hitch angle measurements. Thus, for purposes of illustration, the centerline method will be described in greater detail below under the condition that no template image is available and that the vehicle **14** and trailer **12** are initially moving along a curved path.

The centerline method may begin at step **200**, where the controller **38** processes successive images captured by the imaging device **34** to derive an averaged image. At step **210**, the controller **38** derives an edge map by calculating an intensity gradient, or edge value, for each pixel in the averaged image. At step **220**, the controller **38** identifies trailer pixels in the edge map by comparing the edge value of each pixel to a threshold value and selecting only those pixels meeting or exceeding the threshold value to correspond to trailer pixels. For purposes of illustration, an edge map **222** is exemplarily shown in FIG. **12**, wherein one embodiment of the imaged trailer **12** appears slightly blurred as a result of angular displacement of the trailer **12** relative to the vehicle **14**. It is contemplated that additional threshold values may be used to differentiate between trailer pixels and vehicle pixels since vehicle pixels will generally have a

higher degree of contrast relative to trailer pixels due to the blurring of the trailer **12**. At step **230**, the controller **38** defines a number of candidate lines on the edge map **222**, as exemplarily shown in FIG. **12**. The candidate lines project outwardly from a common projection point, preferably the imaged hitch point **232**. The direction at which the candidate lines project may vary based on a width of the rear bumper of the vehicle **14**, a length of the drawbar of the vehicle **14**, and a length of the tongue of the trailer **12**. In the illustrated embodiment, the candidate lines may vary from −90 degrees to 90 degrees with respect to a reference line **234** that is indicative of a predetermined hitch angle (e.g., a zero hitch angle) and extends vertically across the middle column of the edge map **222** and intersects the imaged hitch point **232**. While the exact location of the imaged hitch point **232** may be unknown initially, the controller **38** may assign a default projection point from which to project the candidate lines. Since it's assumed the hitch point **232** will typically be located along the reference line **234** and usually falls within a predictable range (e.g., 10-20 centimeters from the rear bumper of the vehicle **14**), the selection of a default projection point meeting the foregoing criteria is generally sufficient for the purposes of initial hitch angle detection.

At step **240**, the controller **38** selects the candidate line (e.g., candidate line **242**) having approximately the same number of trailer pixels on each of its sides, or said differently, the candidate line, or centerline, about which the trailer pixels are substantially symmetric. Once the controller **38** has made a candidate line selection, the controller **38** may determine the hitch angle between the vehicle **14** and the trailer **12** based on the angular position of the selected candidate line **242** relative to the reference line **234** at step **250**. More specifically, the angle θ between the selected candidate line **242** and the reference line **234** can be correlated to the hitch angle between the vehicle **14** and the trailer **12**. As the vehicle **14** and trailer **12** continue along its course, steps **200-250** may be iterated with subsequent images captured by the imaging device **34** to continually provide hitch angle measurements.

Referring to FIG. **13**, a method of locating an imaged hitch point in images captured by the imaging device **34** is illustrated. The method, also referred to herein as "the drawbar scan method," may be executed by the controller **38** of the trailer backup assist system **10** and may be embodied as a subroutine of the hitch angle detection routine **44**. The drawbar scan method generally requires the trailer **12** to be moving relative to the vehicle **14** at a non-zero hitch angle in order to identify an imaged hitch point. As such, the drawbar scan method may be executed to provide a suitable rotation point or projection point when executing the centerline method or the template matching method in instances where the vehicle **14** and trailer **12** are moving along a curved path. By identifying the imaged hitch point, more accurate hitch angle measurements can be achieved.

The drawbar scan method generally begins at step **300**, where the controller **38** selects two images captured by the imaging device **34** that show the trailer **12** at distinct hitch angles. The two images may be successive or non-successive depending on the frame rate of the imaging device **34**. In practice, a noticeable difference in hitch angles between the two images is generally preferred. At step **310**, the controller **38** derives an edge map for both images by calculating the intensity gradient, or edge value, for each of their corresponding pixels. For purposes of illustration, FIG. **14** shows a first image **312** in which the hitch angle between the vehicle **14** and the trailer **12** is approximately zero whereas FIG. **15** shows a second image **314** in which the hitch angle between the vehicle **14** and the trailer **12** is approximately 5 degrees relative to the zero hitch angle position shown in FIG. **14**. For purposes of clarity, the edge maps associated with both images **312**, **314** are not shown. At step **320**, the controller **38** defines a detection window **322** of variable height and width in both images **312**, **314**. Each detection window **322** is centered at a common pixel position, such as pixel position **324**, which is located on a reference line **326** that extends vertically across the middle column of the corresponding image **312**, **314**. The reference line **326** is defined by the controller **38** and is assumed to coincide with the center longitudinal axis of an imaged drawbar **327** and intersect with an imaged hitch point **328** between the vehicle **14** and the trailer **12**.

At step **330**, the controller **38** determines an average pixel intensity of the pixels bounded by each detection window **322** when centered at the current pixel position, and at step **340**, the controller **38** calculates an averaged pixel difference, which is defined herein as the absolute value of the difference between the average pixel intensities, as calculated at step **330**. Once the average pixel difference has been calculated, at step **350**, the controller **38** shifts each detection window **322** in an upward vertical direction (as specified by arrow **342**) so that each detection window **322** is commonly centered at a new pixel position that is 1 or more pixel positions higher on the corresponding reference line **326** than the previous pixel position. Thus, by making multiple iterations of steps **330-350**, the controller **38** may calculate averaged pixel differences for when each detection window **322** is commonly centered at a number of pixel positions along the reference line **326**. Once this has been done, at step **360**, the controller **38** extrapolates the location of the hitch point **328** based on variations in the calculated averaged pixel differences.

With respect to images **312** and **314**, it is generally expected that little variation will occur between the calculated averaged pixel differences associated with pixel positions that coincide with the imaged drawbar **327** due in part to the imaged drawbar **327** appearing in a common fixed position in both images **312**, **314**. In contrast, it is generally expected that greater variation to occur between the calculated averaged pixel differences associated with pixel positions that are located on portions of the reference line **326** that extend beyond the imaged drawbar **327** due in part to the trailer **12** appearing in different positions in both images **312**, **314**. For purposes of illustration, a graph is shown in FIG. **16** illustrating calculated averaged pixel differences for a number of pixel positions along the vertical reference line **326**. The pixel positions may fall within a predetermined range in which the imaged hitch point **328** is expected to be located, thereby negating the need to determine averaged pixel differences for pixel positions along the vertical reference line **326** that are unlikely to correspond to the imaged hitch point **328**.

As shown in FIG. **16**, the graph generally demonstrates a relatively constant averaged pixel difference between 2 and 3 when each detection window **322** is commonly centered at pixel positions **0-44** as those pixel positions coincide with the imaged drawbar **327**. In contrast the graph in FIG. **15** generally demonstrates a sharp increase in averaged pixel differences when each detection window **322** is commonly centered at pixel positions **46-70** as those pixel positions are located on portions of the reference line **326** that extend past the imaged drawbar **327**. Recognizing this, the controller **38** may select, as the imaged hitch point **328**, one of the pixel positions (e.g., pixel position **44** or **45**) leading up to the sharp increase in averaged pixel differences. According to

one embodiment, the controller **38** may iterate steps **330-350** of the drawbar scan method until the averaged pixel difference meets or exceeds a predetermined threshold value (e.g., 3.5) and select, as the imaged hitch point, the pixel position associated with the calculated averaged pixel difference that meets or exceeds the threshold value. This threshold value may be determined based on a number of considerations including, but not limited to, the size of the detection window **322**, properties of the imaging device **34**, etc. Once identified, the selected imaged hitch point should closely mirror the actual imaged hitch point **328** and may be used for hitch angle detection pursuant to the template matching method or the centerline method.

Referring to FIG. **17**, a kinematic model of the vehicle **14** and trailer **12** is shown and serves as the basis for determining hitch angle according to another method, referred to herein as "the steady state method" and described in greater detail below. As shown in FIG. **17**, the kinematic model is based on various parameters associated with the vehicle **14** and the trailer **12**. These parameters include:

δ: steering angle at steered wheels **60** of the vehicle **14**;

α: yaw angle of the vehicle **14**;

β: yaw angle of the trailer **12**;

γ: hitch angle between the vehicle **14** and the trailer **12** (γ=β−α);

W: wheelbase length between a front axle **370** and a rear axle **372** of the vehicle **14**;

L: drawbar length between the hitch point **32** and the rear axle **372** of the vehicle **14**;

D: trailer length between the hitch point **32** and axle **20** of the trailer **12** or effective axle for a multiple axle trailer; and

v: vehicle longitudinal speed.

From the kinematic model shown in FIG. **17**, the yaw rate of the vehicle **14** may be represented with the following equation:

$$\frac{d\alpha}{dt} = -\frac{v}{W}\tan\delta$$

Furthermore, the yaw rate of the trailer **12** may be represented with the following equation:

$$\frac{d\beta}{dt} = \frac{v}{D}\sin\gamma + \frac{Lv}{DW}\cos\gamma\tan\delta$$

Accordingly, when the yaw rate of the vehicle **14** and the trailer **12** become equal, the hitch angle γ and the steering angle δ will be constant. This condition, referred to herein as steady state, can occur when a steering command is steadily maintained during a backing maneuver such as when the trailer **12** is reversed in a straight line with the vehicle **14** or when the vehicle **14** and trailer **12** are turning at a constant curvature for at least a threshold period of time or over a threshold distance of motion. Under such steady state driving conditions, the resulting hitch angle γ can be described using the following equation:

$$c=a\cos\gamma+b\sin\gamma$$

This equation can be rewritten as follows:

$$c=a\sqrt{1-\sin^2\gamma}+b\sin\gamma$$

The above equation can be rearranged into quadratic form and rewritten as follows:

$$c^2-a^2-2bc\sin\gamma+(b^2+a^2)\sin\gamma=0$$

Solving the quadratic equation for the hitch angle γ yields the following hitch angle equation:

$$\gamma = \arcsin\frac{bc \pm a\sqrt{b^2+a^2-c^2}}{b^2+a^2}$$

Where,

$$c=-1/W\tan\delta$$

$$b=1/D$$

$$a=L/DW\tan\delta$$

Accordingly, for a particular vehicle and trailer combination, the trailer length D, the wheelbase length W, and the drawbar length L are constant and assumed known. Thus, when the steady state condition is satisfied, the hitch angle γ between the vehicle **14** and trailer **12** may be determined as a function of the trailer length D, the wheelbase length W, the drawbar length L, and the steering angle δ.

Referring to FIG. **18**, the steady state method is shown according to one embodiment. The steady state method may be executed by the controller **38** of the trailer backup assist system **10** and is exemplarily shown as one embodiment of the hitch angle detection routine **44**. The method includes determining a steering angle at step **400**. The steering angle may be provided by the steering angle sensor **64** and may be compensated to remove any offsets associated therewith. Next, at step **410**, a steering angle rate is calculated and is filtered to remove noise. At step **420**, it is determined whether the absolute value of the filtered steering angle rate is less than a threshold steering angle rate (e.g., 0.5 degrees per second) required for hitch angle calculation. The method also includes obtaining a hitch angle between the vehicle **14** and trailer **12**, as measured pursuant to any of the hitch angle detection methods described herein (e.g., the centerline method) at step **430**. At step **440**, the controller **38** calculates a filtered hitch angle rate and determines at step **450** whether the absolute value of the filtered hitch angle rate is less than a threshold hitch angle rate (e.g., 0.5 degrees per second) required for hitch angle calculation. The method further includes obtaining a vehicle speed (e.g., from speed sensor **50**) at step **460**, calculating a filtered vehicle speed at step **470**, and then determining at step **480** whether the absolute value of the filtered vehicle speed is greater than a threshold vehicle speed (e.g., 3 kilometers per second) required for hitch angle calculation. If the conditions specified at steps **420**, **450**, and **480** are met at step **490**, the controller **38** determines that the steady state condition has been satisfied and calculates a hitch angle at step **500** using the hitch angle equation described herein with respect to the kinematic model shown in FIG. **17**. So long as the steady state condition is satisfied, the controller **38** may continue to determine hitch angle via the hitch angle equation.

Referring to FIG. **19**, a method of initializing hitch angle detection is illustrated. The method, referred to herein as the "hitch angle initialization method," may be executed by the controller **38** of the trailer backup assist system **10** and is exemplarily shown as one embodiment of the operating routine **46**. The hitch angle initialization method includes selecting between the various hitch angle detection methods described previously herein, which include the template matching method, the centerline method, and the steady state method, for the purposes of hitch angle detection. As described in greater detail below, the foregoing hitch angle detection methods generally vary in processing time and

reliability. Thus, the hitch angle initialization method is executed in a manner such that the "best available" hitch angle method is chosen based on considerations including the availability of a template image for the trailer **12** being towed and current driving conditions.

The hitch angle initialization method may begin at step **600**, where the controller **38** determines whether a template image is available for the trailer **12** being towed. If so, the controller **38** proceeds to step **610** to determine the hitch angle via the template matching method. The template matching method may determine the hitch angle in approximately 1 second and is generally the most reliable when compared to the centerline method and the steady state method. So long as the template image remains available, the template matching method is selected as the best available hitch angle detection. In the event no template image is available or the template matching method is unable to be executed (e.g., system error), the controller **38** proceeds to step **620** to determine whether the vehicle **14** and trailer **12** are moving in a straight direction. According to one embodiment, the direction of the vehicle **14** and trailer **12** may be determined by obtaining a steering angle from the steering angle sensor **64** over a period of time. If it is determined that the vehicle **14** and trailer **12** are moving in a straight direction, the controller **38** proceeds to step **625** and processes images captured by the imaging device **34** to derive a template image of the trailer **12** before proceeding to step **610** to determine the hitch angle via the template matching method. Otherwise, the controller **38** proceeds to step **630** to determine the hitch angle via the centerline method. The centerline method may determine the hitch angle in less than 1 second but is generally less reliable when compared to the template matching method and the steady state method.

Once the centerline method is selected, the controller **38** will continue to determine the hitch angle via the centerline method until a steady state condition is satisfied at step **640**. As described previously herein, the steady state condition may be satisfied when the vehicle **14** and trailer **12** are moving in a straight direction or moving along a path at constant curvature. Or in other words, the steady state condition is satisfied when the yaw rate of the vehicle **14** and the trailer **12** become equal, thereby resulting in the hitch angle and the steering angle becoming constant. If the steady state condition is satisfied, the controller proceeds to step **650**, where it determines whether the hitch angle is substantially zero. In instances where the steady state condition is satisfied due to the vehicle **14** and trailer **12** moving in a straight direction at a constant zero hitch angle value ($\gamma=0$), the controller **38** proceeds to step **625** and processes images captured by the imaging device **34** to derive a template image of the trailer **12** before proceeding to step **610** to determine the hitch angle via the template matching method. Otherwise, in instances where the steady state condition is satisfied due to the vehicle **14** and trailer **12** moving along a path at a constant non-zero hitch angle value ($\lambda\neq0$), the controller proceeds to step **660** to determine the hitch angle via the steady state method. The steady state method may determine the hitch angle in approximately 1-3 seconds and is generally less reliable than the template matching method but more reliable than the centerline method. So long as the steady state condition is satisfied, the controller **38** will select either the template matching method or the steady state method. If the steady state method is the currently selected hitch angle detection method and the steady state condition is no longer satisfied, the controller **38** returns to step **630** to determine the hitch angle via the centerline method.

It is to be understood that variations and modifications can be made on the aforementioned structures and methods without departing from the concepts of the present invention, and further it is to be understood that such concepts are intended to be covered by the following claims unless these claims by their language expressly state otherwise.

The invention claimed is:

1. A system for detecting a hitch angle between a vehicle and a trailer, comprising:

an imaging device configured to capture images of the trailer;

a controller configured to:

process images captured by the imaging device;

derive a template image having a trailer contour; and

match the template image to a search image;

wherein the hitch angle is determined based on a positional relationship between the template image and the search image;

wherein the controller matches the template image to the search image by rotating the template image relative to the search image about a rotation point; and

wherein the hitch angle correlates to an angle at which the template image is rotated relative to the search image to generate a match therebetween.

2. The system of claim **1**, wherein the controller derives the template image by:

deriving an averaged image of all images captured by the imaging device during a period of time in which the vehicle and the trailer are moving in a straight direction;

calculating an edge value for each pixel of the averaged image;

comparing the edge value of each pixel to a threshold value to identify between trailer pixels and ground pixels; and

determining the trailer contour based on identified trailer pixels.

3. The system of claim **2**, wherein pixels having edge values that meet or exceed the threshold value are identified as trailer pixels and pixels having edge values that do not meet or exceed the threshold value are identified as ground pixels.

4. The system of claim **1**, wherein the controller monitors the displacement of the trailer contour relative to a proximity zone in the search image and initiates a jackknife countermeasure if the trailer contour crosses into the proximity zone.

5. The system of claim **4**, wherein the proximity zone is defined as a space between an imaged rear bumper of the vehicle and a boundary line that is defined by the controller and is overlaid onto the search image.

6. The system of claim **4**, wherein the jackknife countermeasure comprises generating an auditory warning via a vehicle alert system, generating a visual warning via a vehicle display, generating a braking command to a vehicle brake control system, reducing a torque of a vehicle powertrain control system, modifying a steering angle of the vehicle, or a combination thereof.

7. A system for detecting a hitch angle between a vehicle and a trailer, comprising:

an imaging device configured to capture images of the trailer;

a controller configured to:

process images captured by the imaging device;

derive a template image having a trailer contour;

rotate the template image relative to a search image about an imaged hitch point that is common to the template image and the search image; and

determine the hitch angle based on an angle at which the template image is rotated relative to the search image to generate a match therebetween.

8. The system of claim **7**, wherein the controller derives the template image by:

deriving an averaged image of all images captured by the imaging device during a period of time in which the vehicle and the trailer are moving in a straight direction;

calculating an edge value for each pixel of the averaged image;

comparing the edge value of each pixel to a threshold value to identify between trailer pixels and ground pixels; and

determining the trailer contour based on identified trailer pixels.

9. The system of claim **8**, wherein pixels having edge values that meet or exceed the threshold value are identified as trailer pixels and pixels having edge values that do not meet or exceed the threshold value are identified as ground pixels.

10. The system of claim **7**, wherein the controller monitors the displacement of the trailer contour relative to a proximity zone in the search image and initiates a jackknife countermeasure if the trailer contour crosses into the proximity zone.

11. The system of claim **10**, wherein the proximity zone is defined as a space between an imaged rear bumper of the vehicle and a boundary line that is defined by the controller and is overlaid onto the search image.

12. The system of claim **10**, wherein the jackknife countermeasure comprises generating an auditory warning via a vehicle alert system, generating a visual warning via a vehicle display, generating a braking command to a vehicle brake control system, reducing a torque of a vehicle powertrain control system, modifying a steering angle of the vehicle, or a combination thereof.

13. A method for detecting a hitch angle between a vehicle and a trailer, comprising the steps of:

capturing images of the trailer using an imaging device;

providing a controller configured to:

process images captured by the imaging device;

derive a template image having a trailer contour; and

match the template image to a search image;

wherein the hitch angle is determined based on a positional relationship between the template image and the search image;

wherein the controller matches the template image to the search image by rotating the template image relative to the search image about a rotation point; and

wherein the hitch angle correlates to an angle at which the template image is rotated relative to the search image to generate a match therebetween.

14. The method of claim **13**, wherein the controller derives the template image by:

deriving an averaged image of all images captured by the imaging device during a period of time in which the vehicle and the trailer are moving in a straight direction;

calculating an edge value for each pixel of the averaged image;

comparing the edge value of each pixel to a threshold value to identify between trailer pixels and ground pixels; and

determining the trailer contour based on identified trailer pixels.

15. The method of claim **14**, wherein pixels having edge values that exceed the threshold value are identified as trailer pixels and pixels having edge values that do not exceed the threshold value are identified as ground pixels.

16. The method of claim **13**, wherein the controller monitors the displacement of the trailer contour relative to a proximity zone in the search image and initiates a jackknife countermeasure if the trailer contour crosses into the proximity zone.

17. The method of claim **16**, wherein the proximity zone is defined as a space between an imaged rear bumper of the vehicle and a boundary line that is defined by the controller and is overlaid onto the search image.

18. The method of claim **16**, wherein the jackknife countermeasure comprises generating an auditory warning via a vehicle alert system, generating a visual warning via a vehicle display, generating a braking command to a vehicle brake control system, reducing a torque of a vehicle powertrain control system, modifying a steering angle of the vehicle, or a combination thereof.

* * * * *