US009640850B2

(12) United States Patent
Henry et al.

(10) Patent No.: US 9,640,850 B2
(45) Date of Patent: May 2, 2017

(54) **METHODS AND APPARATUS FOR INDUCING A NON-FUNDAMENTAL WAVE MODE ON A TRANSMISSION MEDIUM**

(71) Applicant: **AT&T INTELLECTUAL PROPERTY I, LP**, Atlanta, GA (US)

(72) Inventors: **Paul Shala Henry**, Holmdel, NJ (US); **Robert Bennett**, Southold, NY (US); **Farhad Barzegar**, Branchburg, NJ (US); **Irwin Gerszberg**, Kendall Park, NJ (US); **Donald J Barnickel**, Flemington, NJ (US); **Thomas M. Willis, III**, Tinton Falls, NJ (US)

(73) Assignee: **AT&T INTELLECTUAL PROPERTY I, L.P.**, Atlanta, GA (US)

(*) Notice: Subject to any disclaimer, the term of this patent is extended or adjusted under 35 U.S.C. 154(b) by 0 days.

(21) Appl. No.: **14/750,917**

(22) Filed: **Jun. 25, 2015**

(65) **Prior Publication Data**

US 2016/0380328 A1 Dec. 29, 2016

(51) **Int. Cl.**

H04L 25/03	(2006.01)
H01P 3/127	(2006.01)
H01Q 13/02	(2006.01)

(52) **U.S. Cl.**
CPC ***H01P 3/127*** (2013.01); ***H01Q 13/025*** (2013.01)

(58) **Field of Classification Search**
CPC H01P 3/127; H01Q 13/025
USPC 375/231, 222, 256, 257; 398/44, 139, 398/201, 5
See application file for complete search history.

(56) **References Cited**

U.S. PATENT DOCUMENTS

395,814	A	1/1889	Henry et al.
529,290	A	11/1894	Harry et al.
1,721,785	A	7/1929	Meyer
1,860,123	A	5/1932	Yagi
2,129,711	A	9/1938	Southworth
2,147,717	A	2/1939	Schelkunoff
2,187,908	A	1/1940	McCreary
2,199,083	A	4/1940	Schelkunoff
2,232,179	A	2/1941	King
2,283,935	A	5/1942	King
2,398,095	A	4/1946	Katzin

(Continued)

FOREIGN PATENT DOCUMENTS

AU	565039	B2	9/1987
AU	7261000	A	4/2001

(Continued)

OTHER PUBLICATIONS

"Cband & L/Sband Telemetry Horn Antennas," mWAVE, mwavellc.com, http://www.mwavellc.com/custom -Band-LS--BandTelemetryHornAntennas.php, Jul. 6, 2012.

(Continued)

Primary Examiner — Lam T Mai
(74) *Attorney, Agent, or Firm* — Guntin & Gust, PLC; Ed Guntin

(57) **ABSTRACT**

Aspects of the subject disclosure may include, for example, a system for generating first electromagnetic waves and directing instances of the first electromagnetic waves to an interface of a transmission medium to induce propagation of second electromagnetic waves having at least a dominant non-fundamental wave mode. Other embodiments are disclosed.

25 Claims, 42 Drawing Sheets

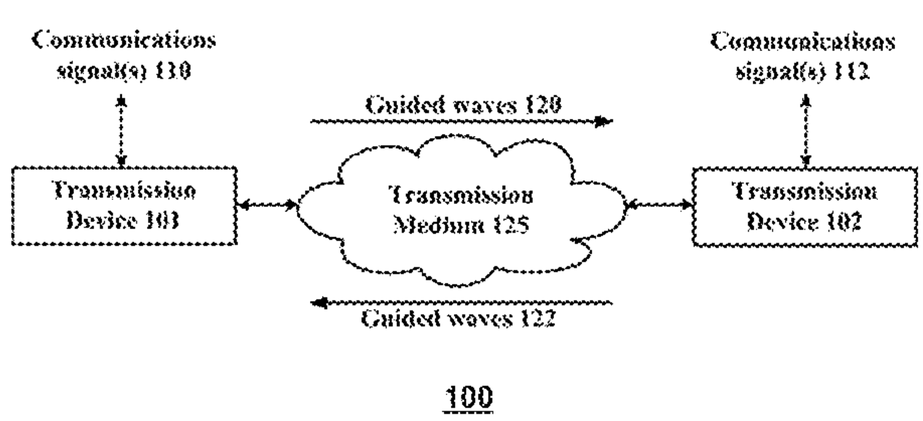

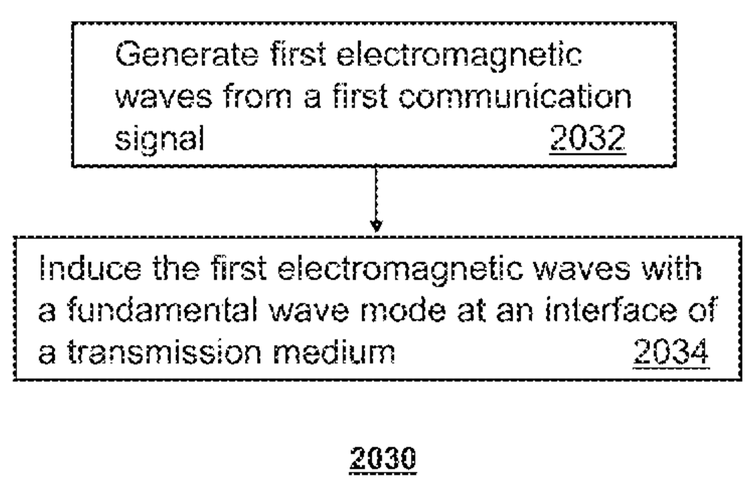

(56) **References Cited**

U.S. PATENT DOCUMENTS

2,402,622 A 6/1946 Hansen
2,407,068 A 9/1946 Fiske et al.
2,407,069 A 9/1946 Fiske
2,411,338 A 11/1946 Roberts
2,415,089 A 2/1947 Feldman et al.
2,415,807 A 2/1947 Barrow et al.
2,420,007 A 5/1947 Olden
2,422,058 A 6/1947 Whinnery
2,432,134 A 12/1947 Bagnall
2,461,005 A 2/1949 Southworth
2,471,021 A 5/1949 Bradley
2,488,400 A 11/1949 Harder
2,513,205 A 6/1950 Roberts et al.
2,514,679 A 7/1950 Southworth
2,519,603 A 8/1950 Reber
2,540,839 A 2/1951 Southworth
2,542,980 A 2/1951 Barrow
2,557,110 A 6/1951 Jaynes
2,562,281 A 7/1951 Mumford
2,596,190 A 5/1952 Wiley
2,599,864 A 6/1952 Robertson-Shersby-Harvie et al.
2,659,817 A 11/1953 Cutler et al.
2,677,055 A 4/1954 Allen
2,685,068 A 7/1954 Goubau
2,688,732 A 9/1954 Kock
2,691,766 A 10/1954 Clapp
2,706,279 A 4/1955 Aron
2,711,514 A 6/1955 Rines
2,723,378 A 11/1955 Clavier et al.
2,727,232 A 12/1955 Pryga
2,740,826 A 4/1956 Bondon
2,745,101 A 5/1956 Marie
2,748,350 A 5/1956 Miller et al.
2,749,545 A 6/1956 Kostriza
2,754,513 A 7/1956 Goubau
2,761,137 A 8/1956 Atta et al.
2,769,147 A 10/1956 Black et al.
2,769,148 A 10/1956 Clogston et al.
2,794,959 A 6/1957 Fox
2,805,415 A 9/1957 Berkowitz
2,806,972 A 9/1957 Sensiper
2,810,111 A 10/1957 Cohn
2,819,451 A 1/1958 Sims et al.
2,820,083 A 1/1958 Hendrix
2,825,060 A 2/1958 Ruze et al.
2,835,871 A 5/1958 Raabe
2,867,776 A 1/1959 Wilkinson, Jr.
2,912,695 A 11/1959 Cutler
2,914,741 A 11/1959 Unger
2,915,270 A 12/1959 Gladsden et al.
2,921,277 A 1/1960 Goubau
2,925,458 A 2/1960 Lester et al.
2,949,589 A 8/1960 Hafner
2,960,670 A 11/1960 Marcatili et al.
2,972,148 A 2/1961 Rupp et al.
2,974,297 A 3/1961 Ros
2,981,949 A 4/1961 Elliott et al.
2,993,205 A 7/1961 Cooper et al.
3,025,478 A 3/1962 Marcatili et al.
3,040,278 A 6/1962 Griemsmann et al.
3,047,822 A 7/1962 Lakatos et al.
3,072,870 A 1/1963 Walker
3,077,569 A 2/1963 Ikrath et al.
3,101,472 A 8/1963 Goubau
3,109,175 A 10/1963 Lloyd
3,129,356 A 4/1964 Phillips
3,134,951 A 5/1964 Huber et al.
3,146,297 A 8/1964 Hahne
3,146,453 A 8/1964 Hagaman
3,201,724 A 8/1965 Hafner
3,205,462 A 9/1965 Meinke
3,218,384 A 11/1965 Shaw
3,234,559 A 2/1966 Bartholoma et al.
3,255,454 A 6/1966 Walter et al.
3,296,364 A 1/1967 Jefferson et al.
3,296,685 A 1/1967 Menahem et al.
3,316,344 A 4/1967 Toms et al.
3,316,345 A 4/1967 Toms et al.
3,318,561 A 5/1967 Robertson, Jr. et al.
3,321,763 A 5/1967 Ikrath et al.
3,329,958 A 7/1967 Anderson et al.
3,351,947 A 11/1967 Hart et al.
3,389,394 A 6/1968 Lewis et al.
3,392,388 A 7/1968 Tsuneo et al.
3,392,395 A 7/1968 Hannan
3,411,112 A 11/1968 Honig et al.
3,413,642 A 11/1968 Cook
3,414,903 A 12/1968 Bartlett et al.
3,420,596 A 1/1969 Osterberg
3,427,573 A 2/1969 White et al.
3,448,455 A 6/1969 Alfandari et al.
3,459,873 A 8/1969 Harris et al.
3,465,346 A 9/1969 Patterson et al.
3,487,158 A 12/1969 Killian
3,500,422 A 3/1970 Grady et al.
3,509,463 A 4/1970 Woodward et al.
3,522,560 A 8/1970 Hayany
3,524,192 A 8/1970 Sakiotis et al.
3,529,205 A 9/1970 Miller
3,530,481 A 9/1970 Tanaka et al.
3,531,803 A 9/1970 Hudspeth et al.
3,555,553 A 1/1971 Boyns
3,557,341 A 1/1971 Sochilin et al.
3,588,754 A 6/1971 Theodore
3,589,121 A 6/1971 Mulvey
3,599,219 A 8/1971 Hansen et al.
3,603,904 A 9/1971 Hafner
3,609,247 A 9/1971 Halstead
3,623,114 A 11/1971 Seaton
3,668,459 A 6/1972 Symons et al.
3,668,574 A 6/1972 Barlow
3,672,202 A 6/1972 Barber et al.
3,686,596 A 8/1972 Albee
3,693,922 A 9/1972 Gueguen
3,699,574 A 10/1972 Plunk et al.
3,703,690 A 11/1972 Ravenscroft et al.
3,725,937 A 4/1973 Schreiber
3,753,086 A 8/1973 Shoemaker, Jr.
3,760,127 A 9/1973 Grossi et al.
3,772,528 A 11/1973 Anderson et al.
3,796,970 A 3/1974 Snell
3,806,931 A 4/1974 Wright
3,833,909 A 9/1974 Schaufelberger
3,835,407 A 9/1974 Yariv et al.
3,845,426 A 10/1974 Barlow
3,888,446 A 6/1975 O'Brien et al.
3,896,380 A 7/1975 Martin
3,911,415 A 10/1975 Whyte
3,935,577 A 1/1976 Hansen et al.
3,936,838 A 2/1976 Foldes et al.
3,952,984 A 4/1976 Dimitry et al.
3,959,794 A 5/1976 Chrepta et al.
3,973,087 A 8/1976 Fong et al.
3,973,240 A 8/1976 Fong et al.
3,983,560 A 9/1976 MacDougall et al.
4,010,799 A 3/1977 Kern et al.
4,020,431 A 4/1977 Saunders et al.
4,026,632 A 5/1977 Hill et al.
4,030,048 A 6/1977 Foldes et al.
4,035,054 A 7/1977 Lattanzi et al.
4,047,180 A 9/1977 Kuo et al.
4,080,600 A 3/1978 Toman et al.
4,099,184 A 7/1978 Rapshys et al.
4,123,759 A 10/1978 Hines et al.
4,125,768 A 11/1978 Jackson et al.
4,149,170 A 4/1979 Campbell et al.
4,155,108 A 5/1979 Tuttle et al.
4,156,241 A 5/1979 Mobley et al.
4,175,257 A 11/1979 Smith et al.
4,188,595 A 2/1980 Cronson et al.
4,190,137 A 2/1980 Shimada et al.
4,195,302 A 3/1980 Leupelt et al.
4,210,357 A 7/1980 Adachi et al.
4,216,449 A 8/1980 Kach

(56) **References Cited**

U.S. PATENT DOCUMENTS

4,234,753	A	11/1980	Clutter
4,238,974	A	12/1980	Fawcett et al.
4,246,584	A	1/1981	Noerpel et al.
4,250,489	A	2/1981	Dudash et al.
4,274,097	A	6/1981	Krall et al.
4,278,955	A	7/1981	Lunden et al.
4,293,833	A	10/1981	Popa et al.
4,307,938	A	12/1981	Dyott et al.
4,316,646	A	2/1982	Siebens
4,319,074	A	3/1982	Yaste et al.
4,329,690	A	5/1982	Parker et al.
4,333,082	A	6/1982	Susman et al.
4,336,719	A	6/1982	Lynnworth
4,345,256	A	8/1982	Rainwater et al.
4,366,565	A	12/1982	Herskowitz
4,367,446	A	1/1983	Hall et al.
4,378,143	A	3/1983	Winzer et al.
4,384,289	A	5/1983	Fernandes et al.
4,398,058	A	8/1983	Gerth et al.
4,398,121	A	8/1983	Chodorow et al.
4,447,811	A	5/1984	Hamid et al.
4,463,329	A	7/1984	Suzuki et al.
4,475,209	A	10/1984	Udren
4,477,814	A	10/1984	Brumbaugh et al.
4,482,899	A	11/1984	Dragone et al.
4,488,156	A	12/1984	DuFort et al.
4,491,386	A	1/1985	Negishi et al.
4,516,130	A	5/1985	Dragone
4,525,432	A	6/1985	Saito et al.
4,525,693	A	6/1985	Suzuki et al.
4,533,875	A	8/1985	Lau et al.
4,541,303	A	9/1985	Kuzunishi
4,550,271	A	10/1985	Lau et al.
4,553,112	A	11/1985	Saad et al.
4,556,271	A	12/1985	Hubbard
4,558,325	A	12/1985	Stroem et al.
4,566,012	A	1/1986	Choung et al.
4,567,401	A	1/1986	Barnett et al.
4,573,215	A	2/1986	Oates et al.
4,589,424	A	5/1986	Vaguine et al.
4,598,262	A	7/1986	Chen et al.
4,599,598	A	7/1986	Komoda et al.
4,604,627	A	8/1986	Saad et al.
4,636,753	A	1/1987	Geller et al.
4,638,322	A	1/1987	Lamberty et al.
4,641,916	A	2/1987	Oestreich et al.
4,644,365	A	2/1987	Horning et al.
4,660,050	A	4/1987	Phillips et al.
4,665,660	A	5/1987	Krall et al.
4,672,384	A	6/1987	Roy et al.
4,673,943	A	6/1987	Hannan
4,680,558	A	7/1987	Ghosh et al.
4,694,599	A	9/1987	Hart et al.
4,704,611	A	11/1987	Edwards et al.
4,715,695	A	12/1987	Nishimura et al.
4,717,974	A	1/1988	Baumeister et al.
4,730,172	A	3/1988	Bengeult
4,730,888	A	3/1988	Darcie et al.
4,731,810	A	3/1988	Watkins
4,735,097	A	4/1988	Lynnworth et al.
4,743,916	A	5/1988	Bengeult
4,745,377	A	5/1988	Stern et al.
4,746,241	A	5/1988	Burbank, III et al.
4,749,244	A	6/1988	Luh
4,758,962	A	7/1988	Fernandes
4,764,738	A	8/1988	Fried et al.
4,772,891	A	9/1988	Svy
4,777,457	A	10/1988	Ghosh et al.
4,786,913	A	11/1988	Barendregt et al.
4,788,553	A	11/1988	Phillips et al.
4,792,771	A	12/1988	Siu et al.
4,792,812	A	12/1988	Rinehart et al.
4,799,031	A	1/1989	Lang et al.
4,800,350	A	1/1989	Bridges et al.
4,801,937	A	1/1989	Fernandes
4,818,963	A	4/1989	Green et al.
4,818,990	A	4/1989	Fernandes
4,829,310	A	5/1989	Losee et al.
4,829,314	A	5/1989	Barbier et al.
4,831,346	A	5/1989	Brooker et al.
4,832,148	A	5/1989	Becker et al.
4,835,517	A	5/1989	van der Gracht et al.
4,845,508	A	7/1989	Krall et al.
4,849,611	A	7/1989	Whitney et al.
4,851,788	A	7/1989	Ives et al.
4,866,454	A	9/1989	Droessler et al.
4,873,534	A	10/1989	Wohlleben et al.
4,879,544	A	11/1989	Maki et al.
4,881,028	A	11/1989	Bright et al.
4,886,980	A	12/1989	Fernandes et al.
4,897,663	A	1/1990	Kusano et al.
4,904,996	A	2/1990	Fernandes
4,915,468	A	4/1990	Kim et al.
4,929,962	A	5/1990	Begout et al.
4,931,808	A	6/1990	Munson et al.
4,932,620	A	6/1990	Foy
4,946,202	A	8/1990	Perricone et al.
4,977,593	A	12/1990	Ballance
4,977,618	A	12/1990	Allen
5,003,318	A	3/1991	Hall et al.
5,006,846	A	4/1991	Granville et al.
5,006,859	A	4/1991	Wong et al.
5,015,914	A	5/1991	Ives et al.
5,017,936	A	5/1991	Massey et al.
5,017,937	A	5/1991	Newham et al.
5,018,180	A	5/1991	Shoulders
5,019,832	A	5/1991	Ekdahl et al.
5,042,903	A	8/1991	Jakubowski et al.
5,043,538	A	8/1991	Hughey et al.
5,043,629	A	8/1991	Doane et al.
5,044,722	A	9/1991	Voser et al.
5,045,820	A	9/1991	Oehlerking et al.
5,065,760	A	11/1991	Krause et al.
5,065,969	A	11/1991	McLean et al.
5,072,228	A	12/1991	Kuwahara et al.
5,082,349	A	1/1992	Cordova-Plaza et al.
5,086,467	A	2/1992	Malek
5,107,231	A	4/1992	Knox et al.
5,109,232	A	4/1992	Monte et al.
5,117,237	A	5/1992	Legg
5,126,750	A	6/1992	Wang et al.
5,132,968	A	7/1992	Cephus
5,134,251	A	7/1992	Martin et al.
5,134,423	A	7/1992	Haupt et al.
5,134,965	A	8/1992	Tokuda et al.
5,142,767	A	9/1992	Adams et al.
5,148,509	A	9/1992	Kannabiran et al.
5,153,676	A	10/1992	Bergh et al.
5,166,698	A	11/1992	Ashbaugh et al.
5,174,164	A	12/1992	Wilheim et al.
5,182,427	A	1/1993	McGaffigan
5,187,409	A	2/1993	Ito et al.
5,193,774	A	3/1993	Rogers et al.
5,198,823	A	3/1993	Litchford et al.
5,212,755	A	5/1993	Holmberg et al.
5,214,394	A	5/1993	Wong et al.
5,214,438	A	5/1993	Smith et al.
5,235,662	A	8/1993	Prince et al.
5,239,537	A	8/1993	Sakauchi
5,241,321	A	8/1993	Tsao et al.
5,241,701	A	8/1993	Andoh et al.
5,248,876	A	9/1993	Kerstens et al.
5,254,809	A	10/1993	Martin
5,265,266	A	11/1993	Trinh
5,266,961	A	11/1993	Milroy et al.
5,276,455	A	1/1994	Fitzsimmons et al.
5,278,687	A	1/1994	Jannson et al.
5,280,297	A	1/1994	Profera et al.
5,291,211	A	3/1994	Tropper et al.
5,298,911	A	3/1994	Li et al.
5,299,773	A	4/1994	Bertrand et al.
5,304,999	A	4/1994	Roberts et al.
5,311,596	A	5/1994	Scott et al.
5,327,149	A	7/1994	Kuffer et al.

(56) **References Cited**

U.S. PATENT DOCUMENTS

5,329,285 A 7/1994 McCandless et al.
5,341,088 A 8/1994 Davis
5,345,522 A 9/1994 Vali et al.
5,352,984 A 10/1994 Piesinger et al.
5,371,623 A 12/1994 Eastmond et al.
5,380,224 A 1/1995 DiCicco
5,389,442 A 2/1995 Kathiresan et al.
5,402,140 A 3/1995 Rodeffer et al.
5,410,318 A 4/1995 Wong et al.
5,412,654 A 5/1995 Perkins
5,428,818 A 6/1995 Meidan et al.
5,434,575 A 7/1995 Jelinek et al.
5,440,660 A 8/1995 Dombrowski et al.
5,451,969 A 9/1995 Toth et al.
5,479,176 A 12/1995 Zavrel et al.
5,481,268 A 1/1996 Higgins
5,482,525 A 1/1996 Kajioka et al.
5,486,839 A 1/1996 Rodeffer et al.
5,488,380 A 1/1996 Harvey et al.
5,495,546 A 2/1996 Bottoms et al.
5,499,308 A 3/1996 Arai et al.
5,499,311 A 3/1996 DeCusatis et al.
5,512,906 A 4/1996 Speciale et al.
5,513,176 A 4/1996 Dean et al.
5,514,965 A 5/1996 Westwood et al.
5,515,059 A 5/1996 How et al.
5,528,208 A 6/1996 Kobayashi et al.
5,543,000 A 8/1996 Lique
5,559,359 A 9/1996 Reyes
5,566,022 A 10/1996 Segev
5,566,196 A 10/1996 Scifres
5,576,721 A 11/1996 Hwang et al.
5,586,054 A 12/1996 Jensen et al.
5,592,183 A 1/1997 Henf
5,600,630 A 2/1997 Takahashi et al.
5,603,089 A 2/1997 Searle et al.
5,619,015 A 4/1997 Kirma
5,621,421 A 4/1997 Kolz et al.
5,630,223 A 5/1997 Bahu et al.
5,637,521 A 6/1997 Rhodes et al.
5,640,168 A 6/1997 Heger et al.
5,646,936 A 7/1997 Shah et al.
5,650,788 A 7/1997 Jha
5,652,554 A 7/1997 Krieg et al.
5,671,304 A 9/1997 Duguay
5,677,909 A 10/1997 Heide
5,680,139 A 10/1997 Huguenin et al.
5,682,256 A 10/1997 Motley et al.
5,684,495 A 11/1997 Dyott et al.
5,724,168 A 3/1998 Oschmann et al.
5,726,980 A 3/1998 Rickard et al.
5,757,323 A 5/1998 Spencer et al.
5,767,807 A 6/1998 Pritchett et al.
5,768,689 A 6/1998 Borg
5,769,879 A 6/1998 Levay et al.
5,784,033 A 7/1998 Boldissar, Jr. et al.
5,784,683 A 7/1998 Sistanizadeh et al.
5,787,673 A 8/1998 Noble
5,793,334 A 8/1998 Harrison et al.
5,805,983 A 9/1998 Naidu et al.
5,812,524 A 9/1998 Moran et al.
5,818,396 A 10/1998 Harrison et al.
5,818,512 A 10/1998 Fuller
5,848,054 A 12/1998 Mosebrook et al.
5,850,199 A 12/1998 Wan et al.
5,854,608 A 12/1998 Leisten
5,859,618 A 1/1999 Miller, II et al.
5,861,843 A 1/1999 Sorace et al.
5,867,763 A 2/1999 Dean et al.
5,870,060 A 2/1999 Chen et al.
5,872,544 A 2/1999 Schay et al.
5,872,547 A 2/1999 Martek
5,873,324 A 2/1999 Kaddas et al.
5,890,055 A 3/1999 Chu et al.
5,898,133 A 4/1999 Bleich et al.
5,898,830 A 4/1999 Wesinger, Jr. et al.
5,900,847 A 5/1999 Ishikawa et al.
5,903,373 A 5/1999 Welch et al.
5,905,949 A 5/1999 Hawkes et al.
5,917,977 A 6/1999 Barrett et al.
5,926,128 A 7/1999 Brash et al.
5,933,422 A 8/1999 Suzuki et al.
5,936,589 A 8/1999 Kawahata
5,948,044 A 9/1999 Varley et al.
5,948,108 A 9/1999 Lu et al.
5,952,964 A 9/1999 Chan et al.
5,952,972 A 9/1999 Ittipiboon et al.
5,952,984 A 9/1999 Kuramoto et al.
5,959,578 A 9/1999 Kreutel et al.
5,959,590 A 9/1999 Sanford et al.
5,977,650 A 11/1999 Rickard et al.
5,982,276 A 11/1999 Stewart
5,986,331 A 11/1999 Letavic et al.
5,994,984 A 11/1999 Stancil et al.
5,994,998 A 11/1999 Fisher et al.
6,005,694 A 12/1999 Liu
6,005,758 A 12/1999 Spencer et al.
6,009,124 A 12/1999 Smith
6,011,520 A 1/2000 Howell et al.
6,011,524 A 1/2000 Jervis et al.
6,014,110 A 1/2000 Bridges et al.
6,023,619 A 2/2000 Kaminsky
6,026,173 A 2/2000 Svenson et al.
6,026,208 A 2/2000 Will et al.
6,026,331 A 2/2000 Feldberg et al.
6,034,638 A 3/2000 Thiel et al.
6,037,894 A 3/2000 Pfizenmaier et al.
6,038,425 A 3/2000 Jeffrey et al.
6,049,647 A 4/2000 Register et al.
6,061,035 A 5/2000 Kinasewitz et al.
6,063,234 A 5/2000 Chen et al.
6,078,297 A 6/2000 Kormanyos et al.
6,088,001 A 7/2000 Burger et al.
6,095,820 A 8/2000 Luxon et al.
6,100,846 A 8/2000 Li et al.
6,103,031 A 8/2000 Aeschbacher et al.
6,107,897 A 8/2000 Hewett et al.
6,111,553 A 8/2000 Steenbuck et al.
6,114,998 A 9/2000 Schefte et al.
6,122,753 A 9/2000 Masuo et al.
6,140,911 A 10/2000 Fisher et al.
6,140,976 A 10/2000 Locke et al.
6,142,434 A 11/2000 Brinkman et al.
6,146,330 A * 11/2000 Tujino G01S 7/52038 600/443
6,150,612 A 11/2000 Grandy et al.
6,151,145 A 11/2000 Srivastava et al.
6,154,488 A 11/2000 Hunt
6,158,383 A 12/2000 Watanabe et al.
6,166,694 A 12/2000 Ying et al.
6,167,055 A 12/2000 Ganek et al.
6,175,917 B1 1/2001 Arrow et al.
6,177,801 B1 1/2001 Chong et al.
6,184,828 B1 2/2001 Shoki et al.
6,195,058 B1 2/2001 Nakamura et al.
6,195,395 B1 2/2001 Frodsham et al.
6,208,161 B1 3/2001 Suda et al.
6,208,903 B1 3/2001 Richards et al.
6,211,836 B1 4/2001 Manasson et al.
6,211,837 B1 4/2001 Crouch et al.
6,215,443 B1 4/2001 Komatsu et al.
6,222,503 B1 4/2001 Gietema et al.
6,225,960 B1 5/2001 Collins et al.
6,229,327 B1 5/2001 Boll et al.
6,239,377 B1 5/2001 Nishikawa et al.
6,239,379 B1 5/2001 Cotter et al.
6,241,045 B1 6/2001 Reeve et al.
6,243,049 B1 6/2001 Chandler
6,246,821 B1 6/2001 Hemken et al.
6,252,553 B1 6/2001 Solomon et al.
6,259,337 B1 7/2001 Wen et al.
6,266,016 B1 7/2001 Bergstedt et al.
6,266,025 B1 7/2001 Popa et al.
6,271,790 B2 8/2001 Smith et al.

(56) **References Cited**

U.S. PATENT DOCUMENTS

6,271,799	B1	8/2001	Rief et al.
6,271,952	B1	8/2001	Epworth et al.
6,278,357	B1	8/2001	Croushore et al.
6,281,855	B1	8/2001	Aoki et al.
6,282,354	B1	8/2001	Jones et al.
6,292,139	B1	9/2001	Yamamoto et al.
6,292,143	B1	9/2001	Romanofsky
6,301,420	B1	10/2001	Greenaway et al.
6,311,288	B1	10/2001	Heeren et al.
6,317,092	B1	11/2001	de Schweinitz et al.
6,320,509	B1	11/2001	Brady et al.
6,323,819	B1	11/2001	Ergene et al.
6,329,959	B1	12/2001	Varadan et al.
6,348,683	B1	2/2002	Verghese et al.
6,351,247	B1	2/2002	Linstrom et al.
6,357,709	B1	3/2002	Parduhn et al.
6,362,789	B1	3/2002	Trumbull et al.
6,366,238	B1	4/2002	DeMore et al.
6,373,436	B1	4/2002	Chen et al.
6,396,440	B1	5/2002	Chen et al.
6,404,773	B1	6/2002	Williams et al.
6,421,021	B1	7/2002	Rupp et al.
6,433,736	B1	8/2002	Timothy et al.
6,433,741	B2	8/2002	Tanizaki et al.
6,436,536	B2	8/2002	Peruzzotti et al.
6,445,351	B1	9/2002	Baker et al.
6,445,774	B1	9/2002	Kidder et al.
6,452,467	B1	9/2002	McEwan
6,452,923	B1	9/2002	Gerszberg et al.
6,455,769	B1	9/2002	Belli et al.
6,456,251	B1	9/2002	Rao et al.
6,462,700	B1	10/2002	Schmidt et al.
6,463,295	B1	10/2002	Yun et al.
6,469,676	B1	10/2002	Fehrenbach et al.
6,473,049	B2	10/2002	Takeuchi et al.
6,483,470	B1	11/2002	Hohnstein et al.
6,489,928	B2	12/2002	Sakurada
6,489,931	B2	12/2002	Liu et al.
6,501,433	B2	12/2002	Popa et al.
6,507,573	B1	1/2003	Brandt et al.
6,510,152	B1	1/2003	Gerszberg et al.
6,515,635	B2	2/2003	Chiang et al.
6,522,305	B2	2/2003	Sharman et al.
6,531,991	B2	3/2003	Adachi et al.
6,532,215	B1	3/2003	Muntz et al.
6,534,996	B1	3/2003	Amrany et al.
6,542,739	B1	4/2003	Garner
6,549,106	B2	4/2003	Martin et al.
6,549,173	B1	4/2003	King et al.
6,552,693	B1	4/2003	Leisten et al.
6,563,981	B2	5/2003	Weisberg et al.
6,567,573	B1	5/2003	Domash et al.
6,573,803	B1	6/2003	Ziegner et al.
6,573,813	B1	6/2003	Joannopoulos et al.
6,580,295	B2	6/2003	Takekuma et al.
6,584,084	B1	6/2003	Barany et al.
6,584,252	B1	6/2003	Schier et al.
6,587,077	B2	7/2003	Vail et al.
6,593,893	B2	7/2003	Hou et al.
6,596,944	B1	7/2003	Clark et al.
6,600,456	B2	7/2003	Gothard et al.
6,606,057	B2	8/2003	Chiang et al.
6,606,066	B1	8/2003	Fawcett et al.
6,606,077	B2	8/2003	Ebling et al.
6,631,229	B1	10/2003	Norris et al.
6,639,484	B2	10/2003	Tzuang et al.
6,639,566	B2	10/2003	Knop et al.
6,642,887	B2	11/2003	Owechko et al.
6,643,254	B1	11/2003	Abe et al.
6,650,296	B2	11/2003	Wong et al.
6,653,598	B2	11/2003	Sullivan et al.
6,657,437	B1	12/2003	LeCroy et al.
6,659,655	B2	12/2003	Dair et al.
6,661,391	B2	12/2003	Ohara et al.
6,671,824	B1	12/2003	Hyland et al.
6,677,899	B1	1/2004	Lee et al.
6,680,903	B1	1/2004	Moriguchi et al.
6,683,580	B2	1/2004	Kuramoto
6,686,832	B2	2/2004	Abraham et al.
6,686,873	B2	2/2004	Patel et al.
6,686,875	B1	2/2004	Wolfson et al.
6,697,027	B2	2/2004	Mahon et al.
6,697,030	B2	2/2004	Gleener
6,703,981	B2	3/2004	Meitzler et al.
6,714,165	B2	3/2004	Verstraeten
6,720,935	B2	4/2004	Lamensdorf et al.
6,725,035	B2	4/2004	Jochim et al.
6,727,470	B2	4/2004	Reichle
6,728,439	B2	4/2004	Weisberg et al.
6,731,649	B1	5/2004	Silverman
6,741,705	B1	5/2004	Nelson et al.
6,750,827	B2	6/2004	Manasson et al.
6,755,312	B2	6/2004	Dziedzic et al.
6,756,538	B1	6/2004	Murga-Gonzalez et al.
6,765,479	B2	7/2004	Stewart et al.
6,768,456	B1	7/2004	Lalezari et al.
6,768,471	B2	7/2004	Bostwick et al.
6,768,474	B2	7/2004	Hunt et al.
6,771,216	B2	8/2004	Patel et al.
6,771,225	B2	8/2004	Tits et al.
6,771,739	B1	8/2004	Beamon et al.
6,774,859	B2	8/2004	Schantz et al.
6,788,865	B2	9/2004	Kawanishi et al.
6,788,951	B2	9/2004	Aoki et al.
6,789,119	B1	9/2004	Zhu et al.
6,792,290	B2	9/2004	Proctor, Jr. et al.
6,809,633	B2	10/2004	Cern et al.
6,809,695	B2	10/2004	Le Bayon et al.
6,812,895	B2	11/2004	Anderson et al.
6,822,615	B2	11/2004	Quan et al.
6,839,032	B2	1/2005	Teshirogi et al.
6,839,160	B2	1/2005	Tsuda et al.
6,839,846	B2	1/2005	Mangold et al.
6,842,157	B2	1/2005	Phelan et al.
6,842,430	B1	1/2005	Melnik et al.
6,850,128	B2	2/2005	Park
6,859,185	B2	2/2005	Royalty et al.
6,859,187	B2	2/2005	Ohlsson et al.
6,859,590	B1	2/2005	Zaccone
6,864,851	B2	3/2005	McGrath et al.
6,867,744	B2	3/2005	Toncich et al.
6,868,258	B2	3/2005	Hayata et al.
6,870,465	B1	3/2005	Song et al.
6,885,674	B2	4/2005	Hunt et al.
6,886,065	B2	4/2005	Sides et al.
6,888,623	B2	5/2005	Clements
6,901,064	B2	5/2005	Billhartz et al.
6,904,218	B2	6/2005	Sun et al.
6,906,676	B2	6/2005	Killen et al.
6,906,681	B2	6/2005	Hoppenstein et al.
6,909,893	B2	6/2005	Aoki et al.
6,917,974	B1	7/2005	Stytz et al.
6,920,289	B2	7/2005	Zimmerman et al.
6,920,315	B1	7/2005	Wilcox et al.
6,922,135	B2	7/2005	Abraham et al.
6,924,776	B2	8/2005	Le et al.
6,933,887	B2	8/2005	Regnier et al.
6,934,655	B2	8/2005	Jones et al.
6,937,595	B2	8/2005	Barzegar et al.
6,943,553	B2	9/2005	Zimmermann et al.
6,944,555	B2	9/2005	Blackett et al.
6,947,376	B1	9/2005	Deng et al.
6,947,635	B2	9/2005	Kohns et al.
6,950,567	B2	9/2005	Kline et al.
6,952,183	B2	10/2005	Yuanzhu et al.
6,958,729	B1	10/2005	Metz et al.
6,965,302	B2	11/2005	Mollenkopf et al.
6,965,355	B1	11/2005	Durham et al.
6,965,784	B2	11/2005	Kanamaluru et al.
6,970,502	B2	11/2005	Kim et al.
6,972,729	B2	12/2005	Wang et al.
6,980,091	B2	12/2005	White, II et al.
6,982,611	B2	1/2006	Cope et al.
6,982,679	B2	1/2006	Kralovec et al.

(56) **References Cited**

U.S. PATENT DOCUMENTS

6,983,174	B2	1/2006	Hoppenstein et al.
6,985,118	B2	1/2006	Killen et al.
6,992,639	B1	1/2006	Lier et al.
6,999,667	B2	2/2006	Jang et al.
7,008,120	B2	3/2006	Zaborsky et al.
7,009,471	B2	3/2006	Elmore
7,012,489	B2	3/2006	Fisher et al.
7,012,572	B1	3/2006	Schaffner et al.
7,016,585	B2	3/2006	Diggle, III et al.
7,019,704	B2	3/2006	Weiss et al.
7,023,400	B2	4/2006	Hill et al.
7,027,003	B2	4/2006	Sasaki et al.
7,032,016	B2	4/2006	Cerami et al.
7,039,048	B1	5/2006	Monta et al.
7,042,403	B2	5/2006	Sievenpiper et al.
7,042,416	B2	5/2006	Kingsley et al.
7,042,420	B2	5/2006	Ebling et al.
7,054,286	B2	5/2006	Ertel et al.
7,054,376	B1	5/2006	Rubinstain et al.
7,054,513	B2	5/2006	Herz et al.
7,055,148	B2	5/2006	Marsh et al.
7,057,558	B2	6/2006	Yasuho et al.
7,057,573	B2	6/2006	Ohira et al.
7,061,370	B2	6/2006	Cern et al.
7,061,891	B1	6/2006	Kilfoyle et al.
7,068,998	B2	6/2006	Zavidniak et al.
7,069,163	B2	6/2006	Gunther et al.
7,075,414	B2	7/2006	Giannini et al.
7,075,485	B2	7/2006	Song et al.
7,075,496	B2	7/2006	Hidai et al.
7,082,321	B2	7/2006	Kuwahara et al.
7,088,306	B2	8/2006	Chiang et al.
7,098,405	B2	8/2006	Glew et al.
7,098,773	B2	8/2006	Berkman et al.
7,102,581	B1	9/2006	West et al.
7,106,265	B2	9/2006	Robertson et al.
7,106,273	B1	9/2006	Brunson et al.
7,113,002	B2	9/2006	Otsuka et al.
7,113,134	B1	9/2006	Berkman et al.
7,119,755	B2	10/2006	Harvey et al.
7,120,345	B2	10/2006	Naitou et al.
7,122,012	B2	10/2006	Bouton et al.
7,123,191	B2	10/2006	Goldberg et al.
7,123,801	B2	10/2006	Fitz et al.
7,126,711	B2	10/2006	Fruth
7,130,516	B2	10/2006	Wu et al.
7,132,950	B2	11/2006	Stewart et al.
7,133,930	B2	11/2006	Sabio et al.
7,134,012	B2	11/2006	Doyle et al.
7,134,135	B2	11/2006	Cerami et al.
7,136,397	B2	11/2006	Sharma et al.
7,136,772	B2	11/2006	Duchi et al.
7,137,605	B1	11/2006	Guertler et al.
7,138,767	B2	11/2006	Chen et al.
7,138,958	B2	11/2006	Syed et al.
7,139,328	B2	11/2006	Thomas et al.
7,145,440	B2	12/2006	Gerszberg et al.
7,151,497	B2	12/2006	Crystal et al.
7,161,934	B2	1/2007	Buchsbaum et al.
7,167,139	B2	1/2007	Kim et al.
7,171,087	B2	1/2007	Takahashi et al.
7,171,493	B2	1/2007	Shu et al.
7,176,589	B2	2/2007	Rouquette et al.
7,180,459	B2	2/2007	Damini et al.
7,180,467	B2	2/2007	Fabrega-Sanchez
7,183,991	B2	2/2007	Bhattacharyya et al.
7,193,562	B2	3/2007	Kish et al.
7,194,528	B1	3/2007	Davidow et al.
7,199,680	B2	4/2007	Fukunaga et al.
7,200,391	B2	4/2007	Chung et al.
7,200,658	B2	4/2007	Goeller et al.
7,205,950	B2	4/2007	Imai et al.
7,212,163	B2	5/2007	Huang et al.
7,215,220	B1	5/2007	Jia et al.
7,215,928	B2	5/2007	Gage et al.
7,218,285	B2	5/2007	Davis et al.
7,224,170	B2	5/2007	Graham et al.
7,224,243	B2	5/2007	Cope et al.
7,224,272	B2	5/2007	White, II et al.
7,224,320	B2	5/2007	Cook et al.
7,224,985	B2	5/2007	Caci et al.
7,228,123	B2	6/2007	Moursund et al.
7,234,413	B2	6/2007	Suzuki et al.
7,234,895	B2	6/2007	Richardson et al.
7,239,284	B1	7/2007	Staal et al.
7,243,610	B2	7/2007	Ishii et al.
7,248,148	B2	7/2007	Kline et al.
7,250,772	B2	7/2007	Furse et al.
7,259,657	B2	8/2007	Mollenkopf et al.
7,260,424	B2	8/2007	Schmidt et al.
7,266,154	B2	9/2007	Gundrum et al.
7,266,275	B2	9/2007	Hansen et al.
7,272,281	B2	9/2007	Stahulak et al.
7,272,362	B2	9/2007	Jeong et al.
7,274,305	B1	9/2007	Luttrell
7,274,936	B2	9/2007	Stern-Berkowitz et al.
7,276,990	B2	10/2007	Sievenpiper et al.
7,280,033	B2	10/2007	Berkman et al.
7,282,922	B2	10/2007	Lo et al.
7,289,449	B1	10/2007	Rubinstein et al.
7,289,704	B1	10/2007	Wagman et al.
7,289,828	B2	10/2007	Cha et al.
7,295,161	B2	11/2007	Gaucher et al.
7,297,869	B2	11/2007	Hiller et al.
7,301,440	B2	11/2007	Mollenkopf
7,307,357	B2	12/2007	Kopp
7,307,596	B1	12/2007	West et al.
7,308,264	B2	12/2007	Stern-Berkowitz et al.
7,308,370	B2	12/2007	Mason, Jr. et al.
7,310,335	B1	12/2007	Garcia-Luna-Aceves et al.
7,311,605	B2	12/2007	Moser
7,312,686	B2	12/2007	Bruno
7,313,087	B2	12/2007	Patil et al.
7,313,312	B2	12/2007	Kimball et al.
7,315,678	B2	1/2008	Siegel
7,318,564	B1	1/2008	Marshall et al.
7,319,717	B2	1/2008	Zitting et al.
7,321,291	B2	1/2008	Gidge et al.
7,321,707	B2	1/2008	Noda et al.
7,324,046	B1	1/2008	Wu et al.
7,324,817	B2	1/2008	Iacono et al.
7,329,815	B2	2/2008	Johnston et al.
7,333,064	B1	2/2008	Timothy et al.
7,333,593	B2	2/2008	Beamon et al.
7,339,466	B2	3/2008	Mansfield et al.
7,339,897	B2	3/2008	Larsson et al.
7,340,768	B2	3/2008	Rosenberger et al.
7,345,623	B2	3/2008	McEwan et al.
7,346,244	B2	3/2008	Gowan et al.
7,346,359	B2	3/2008	Damarla et al.
7,353,293	B2	4/2008	Hipfinger et al.
7,355,560	B2	4/2008	Nagai et al.
7,358,808	B2	4/2008	Berkman et al.
7,358,921	B2	4/2008	Snyder et al.
7,369,085	B1	5/2008	Jacomb-Hood et al.
7,380,272	B2	5/2008	Sharp et al.
7,381,089	B2	6/2008	Hosler, Sr.
7,382,232	B2	6/2008	Gidge et al.
7,383,577	B2	6/2008	Hrastar et al.
7,388,450	B2	6/2008	Camiade et al.
7,397,422	B2	7/2008	Tekawy et al.
7,398,946	B1	7/2008	Marshall
7,400,304	B2	7/2008	Lewis et al.
7,406,337	B2	7/2008	Kim et al.
7,408,426	B2	8/2008	Broyde et al.
7,408,923	B1	8/2008	Khan et al.
7,417,587	B2	8/2008	Iskander et al.
7,418,178	B2	8/2008	Kudou et al.
7,420,474	B1	9/2008	Elks et al.
7,420,525	B2	9/2008	Colburn et al.
7,426,554	B2	9/2008	Kennedy et al.
7,430,257	B1	9/2008	Shattil et al.
7,430,932	B2	10/2008	Mekhanoshin et al.
7,443,334	B2	10/2008	Rees et al.

(56) **References Cited**

U.S. PATENT DOCUMENTS

7,444,404	B2	10/2008	Wetherall et al.
7,446,567	B2	11/2008	Otsuka et al.
7,450,001	B2	11/2008	Berkman
7,453,352	B2	11/2008	Kline et al.
7,453,393	B2	11/2008	Duivenvoorden
7,456,650	B2	11/2008	Lee et al.
7,459,834	B2	12/2008	Knowles et al.
7,460,834	B2	12/2008	Johnson et al.
7,463,877	B2	12/2008	Iwamura
7,465,879	B2	12/2008	Glew et al.
7,466,225	B2	12/2008	White, II et al.
7,468,657	B2	12/2008	Yaney
7,479,841	B2	1/2009	Stenger et al.
7,492,317	B2	2/2009	Tinsley et al.
7,496,674	B2	2/2009	Jorgensen et al.
7,508,834	B2	3/2009	Berkman et al.
7,509,009	B2	3/2009	Suzuki et al.
7,509,675	B2	3/2009	Aaron et al.
7,512,090	B2	3/2009	Benitez Pelaez et al.
7,516,487	B1	4/2009	Szeto et al.
7,518,529	B2	4/2009	O'Sullivan et al.
7,518,952	B1	4/2009	Padden et al.
7,519,323	B2	4/2009	Mohebbi et al.
7,522,115	B2	4/2009	Waltman et al.
7,522,812	B2	4/2009	Zitting
7,525,501	B2	4/2009	Black et al.
7,531,803	B2	5/2009	Mittleman et al.
7,532,792	B2	5/2009	Skovgaard et al.
7,535,867	B1	5/2009	Kilfoyle et al.
7,539,381	B2	5/2009	Li et al.
7,541,981	B2	6/2009	Piskun et al.
7,545,818	B2	6/2009	Chen et al.
7,546,214	B2	6/2009	Rivers, Jr. et al.
7,554,998	B2	6/2009	Simonsson et al.
7,555,182	B2	6/2009	Martin et al.
7,555,186	B2	6/2009	De Montmorillon et al.
7,555,187	B2	6/2009	Bickham et al.
7,557,563	B2	7/2009	Cowan et al.
7,561,025	B2	7/2009	Gerszberg et al.
7,567,154	B2	7/2009	Elmore
7,567,740	B2	7/2009	Bayindir et al.
7,570,137	B2	8/2009	Kintis et al.
7,570,470	B2	8/2009	Holley
7,577,398	B2	8/2009	Tennant et al.
7,580,643	B2	8/2009	Moore et al.
7,581,702	B2	9/2009	Wheeler et al.
7,583,074	B1	9/2009	Lynch et al.
7,584,470	B2	9/2009	Barker et al.
7,589,686	B2	9/2009	Balzovsky et al.
7,590,404	B1	9/2009	Johnson
7,591,020	B2	9/2009	Kammer et al.
7,591,792	B2	9/2009	Bouton et al.
7,596,222	B2	9/2009	Jonas et al.
7,598,844	B2	10/2009	Corcoran et al.
7,602,333	B2	10/2009	Hiramatsu et al.
7,602,815	B2	10/2009	Houghton et al.
7,620,370	B2	11/2009	Barak et al.
7,625,131	B2	12/2009	Zienkewicz et al.
7,626,489	B2	12/2009	Berkman et al.
7,626,542	B2	12/2009	Kober et al.
7,627,300	B2	12/2009	Abramov et al.
7,633,442	B2	12/2009	Lynch et al.
7,634,250	B1	12/2009	Prasad et al.
7,639,201	B2	12/2009	Marklein et al.
7,640,562	B2	12/2009	Bouilloux-Lafont et al.
7,640,581	B1	12/2009	Brenton et al.
7,653,363	B2	1/2010	Karr et al.
RE41,147	E	2/2010	Pang et al.
7,656,167	B1	2/2010	McLean et al.
7,660,252	B1	2/2010	Huang et al.
7,660,328	B1	2/2010	Oz et al.
7,664,117	B2	2/2010	Lou et al.
7,669,049	B2	2/2010	Wang et al.
7,671,701	B2	3/2010	Radtke
7,671,820	B2	3/2010	Tokoro et al.
7,676,679	B2	3/2010	Weis et al.
7,680,478	B2	3/2010	Willars et al.
7,680,516	B2	3/2010	Lovberg et al.
7,680,561	B2	3/2010	Rodgers et al.
7,683,848	B2	3/2010	Musch et al.
7,684,383	B1	3/2010	Thompson et al.
7,693,079	B2	4/2010	Cerami et al.
7,693,162	B2	4/2010	McKenna et al.
7,693,939	B2	4/2010	Wu et al.
7,697,417	B2	4/2010	Chen et al.
7,701,931	B2	4/2010	Kajiwara
7,705,747	B2	4/2010	Twitchell, Jr.
7,714,536	B1	5/2010	Silberg et al.
7,715,672	B2	5/2010	Dong et al.
7,716,660	B2	5/2010	Mackay et al.
7,724,782	B2	5/2010	Wang et al.
7,728,772	B2	6/2010	Mortazawi et al.
7,729,285	B2	6/2010	Yoon et al.
7,733,094	B2	6/2010	Bright et al.
7,734,717	B2	6/2010	Saarimäki et al.
7,739,402	B2	6/2010	Graham et al.
7,743,403	B2	6/2010	McCarty et al.
7,747,356	B2	6/2010	Andarawis et al.
7,747,774	B2	6/2010	Aaron et al.
7,750,244	B1	7/2010	Melding et al.
7,750,763	B2	7/2010	Praβmayer et al.
7,760,978	B2	7/2010	Fishteyn et al.
7,761,079	B2	7/2010	Mollenkopf et al.
7,764,943	B2	7/2010	Radtke et al.
7,773,664	B2	8/2010	Myers et al.
7,782,156	B2	8/2010	Woods et al.
7,783,195	B2	8/2010	Riggsby et al.
7,786,894	B2	8/2010	Polk et al.
7,786,945	B2	8/2010	Baldauf et al.
7,786,946	B2	8/2010	Diaz et al.
7,791,549	B2	9/2010	Clymer et al.
7,792,016	B2	9/2010	Arai et al.
7,795,877	B2	9/2010	Radtke et al.
7,795,994	B2	9/2010	Radtke et al.
7,796,025	B2	9/2010	Berkman et al.
7,796,890	B1	9/2010	Johnson
7,805,029	B2	9/2010	Bayindir et al.
7,808,441	B2	10/2010	Parsche et al.
7,809,223	B2	10/2010	Miyabe et al.
7,812,686	B2	10/2010	Woods et al.
7,812,778	B2	10/2010	Hasegawa et al.
7,813,344	B2	10/2010	Cheswick
7,817,063	B2	10/2010	Hawkins et al.
7,825,793	B1	11/2010	Spillman et al.
7,825,867	B2	11/2010	Tuttle et al.
7,826,602	B1	11/2010	Hunyady et al.
7,827,610	B2	11/2010	Wang et al.
7,830,228	B2	11/2010	Evans et al.
7,835,128	B2	11/2010	Divan et al.
7,835,600	B1	11/2010	Yap et al.
7,843,375	B1	11/2010	Rennie et al.
7,848,517	B2	12/2010	Britz et al.
7,852,752	B2	12/2010	Kano
7,852,837	B1	12/2010	Au et al.
7,855,612	B2	12/2010	Zienkewicz et al.
7,856,007	B2	12/2010	Corcoran et al.
7,869,391	B2	1/2011	Lee et al.
7,872,610	B2	1/2011	Motzer et al.
7,873,249	B2	1/2011	Kachmar et al.
7,876,174	B2	1/2011	Radtke et al.
7,884,285	B2	2/2011	Spencer
7,884,648	B2	2/2011	Broyde et al.
7,885,542	B2	2/2011	Riggsby et al.
7,889,129	B2	2/2011	Fox et al.
7,889,148	B2	2/2011	Diaz et al.
7,889,149	B2	2/2011	Peebles et al.
7,890,053	B2	2/2011	Washiro
7,893,789	B2	2/2011	Paynter et al.
7,894,770	B2	2/2011	Washiro et al.
7,903,918	B1	3/2011	Bickham et al.
7,903,972	B2	3/2011	Riggsby et al.
7,906,973	B1	3/2011	Orr et al.
7,915,980	B2	3/2011	Hardacker et al.
7,916,081	B2	3/2011	Lakkis et al.

(56) **References Cited**

U.S. PATENT DOCUMENTS

7,929,940	B1	4/2011	Dianda et al.
7,930,750	B1	4/2011	Gauvin et al.
7,937,699	B2	5/2011	Schneider et al.
7,940,207	B1	5/2011	Kienzle et al.
7,940,731	B2	5/2011	Gao et al.
7,956,818	B1	6/2011	Hsu et al.
7,958,120	B2	6/2011	Muntz et al.
7,962,957	B2	6/2011	Keohane et al.
7,965,842	B2	6/2011	Whelan et al.
7,970,365	B2	6/2011	Martin et al.
7,970,937	B2	6/2011	Shuster et al.
7,971,053	B2	6/2011	Gibson et al.
7,974,387	B2	7/2011	Lutz et al.
7,983,740	B2	7/2011	Culver et al.
7,986,711	B2	7/2011	Horvath et al.
7,990,329	B2	8/2011	Deng et al.
7,991,877	B2	8/2011	Keohane et al.
7,992,014	B2	8/2011	Langgood et al.
7,994,996	B2	8/2011	Rebeiz et al.
7,994,999	B2	8/2011	Maeda et al.
7,997,546	B1	8/2011	Andersen et al.
8,013,694	B2	9/2011	Sagala et al.
8,019,288	B2	9/2011	Yu et al.
8,022,885	B2	9/2011	Smoyer et al.
8,022,887	B1	9/2011	Zarnaghi et al.
8,027,391	B2	9/2011	Matsubara et al.
8,036,207	B2	10/2011	Chen et al.
8,049,576	B2	11/2011	Broyde et al.
8,059,576	B2	11/2011	Vavik et al.
8,059,593	B2	11/2011	Shih et al.
8,064,944	B2	11/2011	Yun et al.
8,065,099	B2	11/2011	Gibala et al.
8,069,483	B1	11/2011	Matlock et al.
8,072,323	B2	12/2011	Kodama et al.
8,072,386	B2	12/2011	Lier et al.
8,073,810	B2	12/2011	Maes
8,077,049	B2	12/2011	Yaney et al.
8,077,113	B2	12/2011	Renilson et al.
8,081,854	B2	12/2011	Yoon et al.
8,089,404	B2	1/2012	Nichols et al.
8,089,952	B2	1/2012	Spade et al.
8,090,258	B2	1/2012	DeLew et al.
8,090,379	B2	1/2012	Lambert et al.
8,094,081	B1	1/2012	Boone et al.
8,094,985	B2	1/2012	Imamura et al.
8,095,093	B2	1/2012	Takinami et al.
8,098,198	B2	1/2012	Thiesen et al.
8,102,324	B2	1/2012	Tuau et al.
8,102,779	B2	1/2012	Kim et al.
RE43,163	E	2/2012	Anderson et al.
8,111,148	B2	2/2012	Parker et al.
8,120,488	B2	2/2012	Bloy et al.
8,121,624	B2	2/2012	Cai et al.
8,125,399	B2	2/2012	McKinzie et al.
8,126,393	B2	2/2012	Wu et al.
8,129,817	B2	3/2012	Jou et al.
8,131,125	B2	3/2012	Molin et al.
8,131,266	B2	3/2012	Cai et al.
8,132,239	B2	3/2012	Wahl
8,134,424	B2	3/2012	Kato et al.
8,134,458	B2	3/2012	Lund
8,140,113	B2	3/2012	Rofougaran et al.
8,150,311	B2	4/2012	Hart et al.
8,151,306	B2	4/2012	Rakib
8,156,520	B2	4/2012	Casagrande et al.
8,159,316	B2	4/2012	Miyazato et al.
8,159,385	B2	4/2012	Farneth et al.
8,159,394	B2	4/2012	Hayes et al.
8,159,742	B2	4/2012	McKay et al.
8,159,933	B2	4/2012	Henry
8,159,955	B2	4/2012	Larsson et al.
8,160,064	B2	4/2012	Kokernak et al.
8,160,530	B2	4/2012	Corman et al.
8,160,825	B1	4/2012	Roe, Jr. et al.
8,164,531	B2	4/2012	Lier et al.
8,171,146	B2	5/2012	Chen et al.
8,172,173	B2	5/2012	Carlson et al.
8,173,943	B2	5/2012	Vilo et al.
8,175,535	B2	5/2012	Mu et al.
8,175,649	B2	5/2012	Harel et al.
8,179,787	B2	5/2012	Knapp et al.
8,180,917	B1	5/2012	Yan et al.
8,184,015	B2	5/2012	Lilien et al.
8,184,059	B2	5/2012	Bunch et al.
8,184,311	B2	5/2012	Sakai et al.
8,185,062	B2	5/2012	Rofougaran et al.
8,188,855	B2	5/2012	Sharma et al.
8,199,762	B2	6/2012	Michelson et al.
8,203,501	B2	6/2012	Kim et al.
8,212,635	B2	7/2012	Miller, II et al.
8,212,722	B2	7/2012	Ngo et al.
8,213,758	B2	7/2012	Dong et al.
8,218,929	B2	7/2012	Bickham et al.
8,222,919	B2	7/2012	Broyde et al.
8,222,977	B2	7/2012	Oyama et al.
8,225,379	B2	7/2012	van de Groenendaal
8,233,905	B2	7/2012	Vaswani et al.
8,237,617	B1	8/2012	Johnson et al.
8,238,824	B2	8/2012	Washiro
8,242,358	B2	8/2012	Park et al.
8,243,603	B2	8/2012	Gossain et al.
8,249,028	B2	8/2012	Porras et al.
8,251,307	B2	8/2012	Goossen et al.
8,253,516	B2	8/2012	Miller, II et al.
8,255,952	B2	8/2012	Boylan, III et al.
8,258,743	B2	9/2012	Tyler et al.
8,259,028	B2	9/2012	Hills et al.
8,264,417	B2	9/2012	Snow et al.
8,269,583	B2	9/2012	Miller, II et al.
8,295,301	B2	10/2012	Yonge, III et al.
8,300,538	B2	10/2012	Kim et al.
8,300,640	B2	10/2012	Al-Banna et al.
8,316,228	B2	11/2012	Winslow et al.
8,316,364	B2	11/2012	Stein et al.
8,324,990	B2	12/2012	Vouloumanos
8,325,693	B2	12/2012	Binder et al.
8,343,145	B2	1/2013	Brannan et al.
8,344,829	B2	1/2013	Miller, II et al.
8,363,313	B2	1/2013	Nakaguma et al.
8,369,667	B2	2/2013	Rose et al.
8,373,095	B2	2/2013	Huynh et al.
8,373,597	B2	2/2013	Schadler et al.
8,374,821	B2	2/2013	Rousselle et al.
8,384,600	B2	2/2013	Huang et al.
8,385,978	B2	2/2013	Leung et al.
8,386,198	B2	2/2013	Lancaster
8,390,402	B2	3/2013	Kunes et al.
8,405,567	B2	3/2013	Park et al.
8,406,239	B2	3/2013	Hurwitz et al.
8,406,593	B2	3/2013	Molin et al.
8,407,687	B2	3/2013	Moshir et al.
8,412,130	B2	4/2013	Suematsu et al.
8,414,326	B2	4/2013	Bowman
8,415,884	B2	4/2013	Chen et al.
8,428,033	B2	4/2013	Hettstedt et al.
8,433,168	B2	4/2013	Filippov et al.
8,434,103	B2	4/2013	Tsuchida et al.
8,437,383	B2	5/2013	Wiwel et al.
8,457,027	B2	6/2013	Dougherty et al.
8,458,453	B1	6/2013	Mahalingaiah et al.
8,462,063	B2	6/2013	Gummalla et al.
8,467,363	B2	6/2013	Lea et al.
8,468,244	B2	6/2013	Redlich et al.
8,472,327	B2	6/2013	DelRegno et al.
8,484,511	B2	7/2013	Tidwell et al.
8,495,718	B2	7/2013	Han et al.
8,497,749	B2	7/2013	Elmore
8,503,845	B2	8/2013	Winzer et al.
8,505,057	B2	8/2013	Rogers
8,509,114	B1	8/2013	Szajdecki
8,514,980	B2	8/2013	Kuhtz
8,515,383	B2	8/2013	Prince et al.
8,516,470	B1	8/2013	Joshi et al.
8,516,474	B2	8/2013	Lamba et al.

(56) **References Cited**

U.S. PATENT DOCUMENTS

8,519,892 B2 8/2013 Ding et al.
8,520,578 B2 8/2013 Rayment et al.
8,520,636 B2 8/2013 Xu
8,528,059 B1 9/2013 Saluzzo et al.
8,532,023 B2 9/2013 Buddhikot et al.
8,532,046 B2 9/2013 Hu et al.
8,532,492 B2 9/2013 Sadowski et al.
8,536,857 B2 9/2013 Nero, Jr. et al.
8,537,068 B2 9/2013 Call et al.
8,537,705 B2 9/2013 Afkhamie et al.
8,539,540 B2 9/2013 Zenoni
8,539,569 B2 9/2013 Mansour
8,542,968 B2 9/2013 Dong et al.
8,548,294 B2 10/2013 Toge et al.
8,553,646 B2 10/2013 Kumar
8,561,104 B1 10/2013 Dow et al.
8,561,181 B1 10/2013 Sobel et al.
8,565,568 B2 10/2013 Bigot-Astruc et al.
8,572,247 B2 10/2013 Larson et al.
8,572,639 B2 10/2013 Ficco
8,572,661 B2 10/2013 Strong et al.
8,578,076 B2 11/2013 van der Linden et al.
8,578,486 B2 11/2013 Lifliand et al.
8,582,502 B2 11/2013 Conte et al.
8,584,195 B2 11/2013 Sherlock et al.
8,587,490 B2 11/2013 Niver et al.
8,587,492 B2 11/2013 Runyon et al.
8,588,567 B2 11/2013 Kamps et al.
8,588,840 B2 11/2013 Truong et al.
8,588,991 B1 11/2013 Forbes, Jr.
8,593,238 B2 11/2013 Miller, II et al.
8,594,956 B2 11/2013 McBee et al.
8,600,602 B1 12/2013 Watson et al.
8,604,982 B2 12/2013 Gummalla et al.
8,604,999 B2 12/2013 Abumrad et al.
8,605,579 B2 12/2013 Abraham et al.
8,612,550 B2 12/2013 Yoo et al.
8,613,020 B2 12/2013 Knudson et al.
8,615,190 B2 12/2013 Lu
8,625,547 B1 1/2014 Miller et al.
8,629,811 B2 1/2014 Gaynor et al.
8,639,934 B2 1/2014 Kruglick
8,644,219 B2 2/2014 Nishizaka et al.
8,653,906 B2 2/2014 Mahon et al.
8,655,396 B2 2/2014 Malladi et al.
8,656,458 B2 2/2014 Heffez et al.
8,660,526 B1 2/2014 Heiderscheit
8,660,698 B2 2/2014 Phillips et al.
8,665,102 B2 3/2014 Salewske et al.
8,666,553 B2 3/2014 Phillips et al.
8,674,630 B1 3/2014 Cornelius et al.
8,676,186 B2 3/2014 Niu
8,680,450 B2 3/2014 Pritchard et al.
8,681,463 B2 3/2014 Franks et al.
8,686,911 B2 4/2014 Kim et al.
8,687,650 B2 4/2014 King
8,688,153 B2 4/2014 Komori et al.
8,699,454 B2 4/2014 Hapsari et al.
8,699,461 B2 4/2014 Qian et al.
8,705,925 B2 4/2014 Terada et al.
8,706,026 B2 4/2014 Truong et al.
8,707,432 B1 4/2014 Rathi et al.
8,711,732 B2 4/2014 Johnson et al.
8,711,806 B2 4/2014 Lim et al.
8,711,857 B2 4/2014 Jackson et al.
8,712,200 B1 4/2014 Abernathy et al.
8,719,938 B2 5/2014 DeMeter et al.
8,723,730 B2 5/2014 Lu et al.
8,724,102 B2 5/2014 Urban et al.
8,731,358 B2 5/2014 Pare et al.
8,732,476 B1 5/2014 Van et al.
8,737,793 B2 5/2014 Imamura et al.
8,738,318 B2 5/2014 Spillane
8,743,004 B2 6/2014 Haziza
8,749,449 B2 6/2014 Caldwell et al.
8,750,097 B2 6/2014 Maenpaa et al.
8,750,664 B2 6/2014 Huang et al.
8,755,659 B2 6/2014 Imamura et al.
8,760,354 B2 6/2014 Flannery et al.
8,761,792 B2 6/2014 Sennett et al.
8,763,097 B2 6/2014 Bhatnagar et al.
8,767,071 B1 7/2014 Marshall
8,769,622 B2 7/2014 Chang et al.
8,780,012 B2 7/2014 Llombart Juan et al.
8,782,195 B2 7/2014 Foti
8,786,284 B2 7/2014 Sirigiri et al.
8,786,514 B2 7/2014 Dickie et al.
8,789,091 B2 7/2014 Eldering et al.
8,792,760 B2 7/2014 Choi et al.
8,792,933 B2 7/2014 Chen et al.
8,793,363 B2 7/2014 Sater et al.
8,793,742 B2 7/2014 Macrae et al.
8,797,207 B2 8/2014 Kienzle et al.
8,804,667 B2 8/2014 Wang
8,806,202 B2 8/2014 Shoemake et al.
8,810,404 B2 8/2014 Bertoncini et al.
8,810,421 B2 8/2014 Deaver, Sr. et al.
8,810,468 B2 8/2014 Cannon et al.
8,811,278 B2 8/2014 Hori et al.
8,812,050 B1 8/2014 Bencheikh et al.
8,812,154 B2 8/2014 Vian et al.
8,817,741 B2 8/2014 Shaheen
8,824,380 B2 9/2014 Jetcheva et al.
8,825,239 B2 9/2014 Cooper et al.
8,830,112 B1 9/2014 Buehler et al.
8,831,506 B2 9/2014 Claret et al.
8,836,607 B2 9/2014 Cook et al.
8,839,350 B1 9/2014 Shapcott et al.
8,847,840 B1 9/2014 Diaz et al.
8,847,846 B1 9/2014 Diaz et al.
8,856,239 B1 10/2014 Oliver et al.
8,856,530 B2 10/2014 Lamberg et al.
8,863,245 B1 10/2014 Abhyanker
8,866,691 B2 10/2014 Montgomery et al.
8,867,226 B2 10/2014 Colomb et al.
8,872,032 B2 10/2014 Su et al.
8,875,224 B2 10/2014 Gross et al.
8,878,740 B2 11/2014 Coupland et al.
8,881,588 B2 11/2014 Baer et al.
8,885,689 B2 11/2014 Blasco et al.
8,887,212 B2 11/2014 Dua
8,890,759 B2 11/2014 Pantea et al.
8,893,246 B2 11/2014 El-Moussa et al.
8,897,215 B2 11/2014 Hazani et al.
8,897,697 B1 11/2014 Willis, III et al.
8,901,916 B2 12/2014 Rodriguez et al.
8,903,214 B2 12/2014 Alkeskjold
8,907,222 B2 12/2014 Stransky
8,907,845 B2 12/2014 Jones
8,908,502 B2 12/2014 Hayashitani
8,908,573 B1 12/2014 Wang et al.
8,913,862 B1 12/2014 Emmerich et al.
8,917,210 B2 12/2014 Shamim et al.
8,917,215 B2 12/2014 Pohl
8,917,964 B2 12/2014 Blew et al.
8,918,108 B2 12/2014 van Heeswyk et al.
8,918,135 B2 12/2014 Kang et al.
8,922,447 B2 12/2014 Gao et al.
8,925,079 B2 12/2014 Miyake et al.
8,934,747 B2 1/2015 Smith et al.
8,937,577 B2 1/2015 Gerini et al.
8,938,144 B2 1/2015 Hennink et al.
8,938,255 B2 1/2015 Dalla et al.
8,941,912 B2 1/2015 Ichii et al.
8,947,258 B2 2/2015 Reid et al.
8,948,235 B2 2/2015 Proctor, Jr. et al.
8,952,678 B2 2/2015 Giboney et al.
8,955,051 B2 2/2015 Marzii
8,955,075 B2 2/2015 Smith et al.
8,957,818 B2 2/2015 Chen et al.
8,957,821 B1 2/2015 Matyas et al.
8,958,665 B2 2/2015 Ziari et al.
8,958,812 B2 2/2015 Weiguo
8,963,790 B2 2/2015 Brown et al.

(56) **References Cited**

U.S. PATENT DOCUMENTS

8,964,433	B2	2/2015	Hai-Maharsi
8,966,609	B2	2/2015	Lee et al.
8,970,438	B2	3/2015	Hager et al.
8,984,113	B2	3/2015	Li et al.
8,989,788	B2	3/2015	Kim et al.
8,994,473	B2	3/2015	Levi et al.
8,994,474	B2	3/2015	Mahon et al.
8,996,188	B2	3/2015	Frader-thompson et al.
8,996,728	B2	3/2015	Cochinwala et al.
9,000,353	B2	4/2015	Seo et al.
9,001,689	B1	4/2015	Ponnampalam et al.
9,001,717	B2	4/2015	Chun et al.
9,003,492	B2	4/2015	Katar
9,008,208	B2	4/2015	Khandani
9,008,513	B2	4/2015	Kim et al.
9,009,460	B2	4/2015	Chen
9,014,621	B2	4/2015	Mohebbi
9,015,467	B2	4/2015	Buer
9,019,164	B2	4/2015	Syed et al.
9,019,595	B2	4/2015	Jain et al.
9,019,892	B2	4/2015	Zhou et al.
9,020,555	B2	4/2015	Sheikh et al.
9,021,251	B2	4/2015	Chawla
9,021,575	B2	4/2015	Martini
9,037,516	B2	5/2015	Abhyanker
9,042,812	B1	5/2015	Bennett et al.
9,065,172	B2	6/2015	Lewry et al.
9,070,962	B2	6/2015	Kobayashi
9,082,307	B2	7/2015	Sharawi
9,083,083	B2	7/2015	Hills et al.
9,094,407	B1	7/2015	Matthieu
9,098,325	B2	8/2015	Reddin
9,099,787	B2	8/2015	Blech
9,103,864	B2	8/2015	Ali
9,106,617	B2	8/2015	Kshirsagar et al.
9,113,347	B2	8/2015	Shala
9,119,127	B1	8/2015	Henry
9,128,941	B2	9/2015	Shulman
9,130,641	B2	9/2015	Mohebbi
9,134,945	B2	9/2015	Husain
9,137,485	B2	9/2015	Bar-Niv et al.
9,142,334	B2	9/2015	Muto et al.
9,143,084	B2	9/2015	Siles et al.
9,167,535	B2	10/2015	Christoffersson et al.
9,173,217	B2	10/2015	Teng et al.
9,202,371	B2	12/2015	Jain
9,204,418	B2	12/2015	Siomina et al.
9,209,902	B2	12/2015	Willis, III et al.
9,219,594	B2	12/2015	Khlat
9,246,231	B2	1/2016	Ju
9,260,244	B1	2/2016	Cohn
9,264,204	B2	2/2016	Seo et al.
9,265,078	B2	2/2016	Lim et al.
9,270,013	B2	2/2016	Ley
9,271,185	B2	2/2016	Abdelmonem et al.
9,276,303	B2	3/2016	Chang et al.
9,276,304	B2	3/2016	Behan
9,281,564	B2	3/2016	Vincent
9,282,144	B2	3/2016	Tebay et al.
9,287,605	B2	3/2016	Daughenbaugh et al.
9,293,801	B2	3/2016	Courtney et al.
9,302,770	B2	4/2016	Cohen et al.
9,306,682	B2	4/2016	Singh
9,312,929	B2	4/2016	Forenza et al.
9,324,020	B2	4/2016	Nazarov
9,325,067	B2	4/2016	Ali et al.
9,326,316	B2	4/2016	Yonge et al.
9,334,052	B2	5/2016	Ubhi et al.
9,338,823	B2	5/2016	Saban et al.
9,346,560	B2	5/2016	Wang
9,350,063	B2	5/2016	Herbsommer et al.
9,351,182	B2	5/2016	Elliott et al.
9,356,358	B2	5/2016	Hu et al.
9,362,629	B2	6/2016	Miller et al.
9,363,690	B1	6/2016	Suthar et al.
9,363,761	B2	6/2016	Venkatraman
9,368,275	B2	6/2016	McBee et al.
9,379,556	B2	6/2016	Haensgen et al.
9,380,857	B2	7/2016	Davis et al.
9,391,874	B2	7/2016	Corti et al.
9,393,683	B2	7/2016	Kimberlin et al.
9,397,380	B2	7/2016	Kudela et al.
9,414,126	B1	8/2016	Zinevich
9,421,869	B1	8/2016	Ananthanarayanan et al.
9,422,139	B1	8/2016	Bialkowski et al.
9,439,092	B1	9/2016	Chukka et al.
9,458,974	B2	10/2016	Townsend, Jr. et al.
9,461,706	B1	10/2016	Bennett et al.
9,467,219	B2	10/2016	Vilhar
2001/0030789	A1	10/2001	Jiang et al.
2002/0002040	A1	1/2002	Kline et al.
2002/0008672	A1	1/2002	Gothard et al.
2002/0021716	A1	2/2002	Terk et al.
2002/0024424	A1	2/2002	Burns et al.
2002/0027481	A1	3/2002	Fiedziuszko et al.
2002/0040439	A1	4/2002	Kellum et al.
2002/0057223	A1	5/2002	Hook
2002/0069417	A1	6/2002	Kliger et al.
2002/0083194	A1	6/2002	Bak et al.
2002/0099949	A1	7/2002	Fries et al.
2002/0101852	A1	8/2002	Say et al.
2002/0111997	A1	8/2002	Herlihy et al.
2002/0156917	A1	10/2002	Nye et al.
2002/0186694	A1	12/2002	Mahajan et al.
2002/0197979	A1	12/2002	Vanderveen et al.
2003/0002125	A1	1/2003	Fuse et al.
2003/0002476	A1	1/2003	Chung et al.
2003/0010528	A1	1/2003	Niles
2003/0038753	A1	2/2003	Mahon et al.
2003/0049003	A1	3/2003	Ahmad et al.
2003/0054793	A1	3/2003	Manis et al.
2003/0061346	A1	3/2003	Pekary et al.
2003/0095208	A1	5/2003	Chouraqui et al.
2003/0137464	A1	7/2003	Foti et al.
2003/0152331	A1	8/2003	Dair et al.
2003/0164794	A1	9/2003	Haynes et al.
2003/0188308	A1	10/2003	Kizuka
2003/0190110	A1	10/2003	Kline et al.
2003/0202756	A1	10/2003	Hurley et al.
2003/0210197	A1	11/2003	Cencich et al.
2004/0015725	A1	1/2004	Boneh et al.
2004/0023640	A1	2/2004	Ballai et al.
2004/0024913	A1	2/2004	Ikeda et al.
2004/0048596	A1	3/2004	Wyrzykowska et al.
2004/0054425	A1	3/2004	Elmore
2004/0084582	A1	5/2004	Kralic et al.
2004/0085153	A1	5/2004	Fukunaga et al.
2004/0090312	A1	5/2004	Manis et al.
2004/0091032	A1	5/2004	Duchi et al.
2004/0100343	A1	5/2004	Tsu et al.
2004/0104410	A1	6/2004	Gilbert et al.
2004/0113757	A1	6/2004	White, II et al.
2004/0119564	A1	6/2004	Itoh et al.
2004/0131310	A1	7/2004	Walker et al.
2004/0163135	A1	8/2004	Giaccherini et al.
2004/0165669	A1	8/2004	Otsuka et al.
2004/0169572	A1	9/2004	Elmore et al.
2004/0196784	A1	10/2004	Larsson et al.
2004/0198228	A1	10/2004	Raghothaman et al.
2004/0212481	A1	10/2004	Abraham et al.
2004/0213147	A1	10/2004	Wiese et al.
2004/0213189	A1	10/2004	Alspaugh et al.
2004/0213294	A1	10/2004	Hughes et al.
2004/0250069	A1	12/2004	Kosamo et al.
2005/0005854	A1	1/2005	Suzuki et al.
2005/0017825	A1	1/2005	Hansen
2005/0063422	A1	3/2005	Lazar et al.
2005/0068223	A1	3/2005	Vavik et al.
2005/0069321	A1	3/2005	Sullivan et al.
2005/0074208	A1	4/2005	Badcock et al.
2005/0097396	A1	5/2005	Wood
2005/0102185	A1	5/2005	Barker et al.
2005/0111533	A1	5/2005	Berkman et al.
2005/0143868	A1	6/2005	Whelan et al.

(56) **References Cited**

U.S. PATENT DOCUMENTS

2005/0151659	A1	7/2005	Donovan et al.
2005/0164666	A1	7/2005	Lang et al.
2005/0168326	A1	8/2005	White et al.
2005/0169056	A1	8/2005	Berkman et al.
2005/0169401	A1	8/2005	Abraham et al.
2005/0177463	A1	8/2005	Crutchfield et al.
2005/0190101	A1	9/2005	Hiramatsu et al.
2005/0208949	A1	9/2005	Chiueh et al.
2005/0212626	A1	9/2005	Takamatsu et al.
2005/0219135	A1	10/2005	Lee et al.
2005/0226353	A1	10/2005	Gebara et al.
2005/0249245	A1	11/2005	Hazani et al.
2005/0258920	A1	11/2005	Elmore
2006/0034724	A1	2/2006	Hamano et al.
2006/0053486	A1	3/2006	Wesinger et al.
2006/0082516	A1	4/2006	Strickland et al.
2006/0111047	A1	5/2006	Louberg et al.
2006/0113425	A1	6/2006	Rader et al.
2006/0114925	A1	6/2006	Gerszberg et al.
2006/0119528	A1	6/2006	Bhattacharyya et al.
2006/0120399	A1	6/2006	Claret et al.
2006/0128322	A1	6/2006	Igarashi et al.
2006/0153878	A1	7/2006	Savarino et al.
2006/0172781	A1	8/2006	Mohebbi et al.
2006/0181394	A1	8/2006	Clarke et al.
2006/0187023	A1	8/2006	Iwamura et al.
2006/0192672	A1	8/2006	Gidge et al.
2006/0220833	A1	10/2006	Berkman et al.
2006/0232493	A1	10/2006	Huang et al.
2006/0239501	A1	10/2006	Petrovic et al.
2006/0244672	A1	11/2006	Avakian et al.
2006/0249622	A1	11/2006	Steele et al.
2006/0255930	A1	11/2006	Berkman et al.
2006/0286927	A1	12/2006	Berkman et al.
2007/0002771	A1	1/2007	Berkman et al.
2007/0022475	A1	1/2007	Rossi et al.
2007/0025265	A1	2/2007	Marcoutullio et al.
2007/0025386	A1	2/2007	Riedel et al.
2007/0041464	A1	2/2007	Kim et al.
2007/0041554	A1	2/2007	Newman
2007/0054622	A1	3/2007	Berkman
2007/0063914	A1	3/2007	Becker et al.
2007/0090185	A1	4/2007	Lewkowitz et al.
2007/0105508	A1	5/2007	Tong et al.
2007/0135044	A1	6/2007	Rhodes et al.
2007/0144779	A1	6/2007	Vicente et al.
2007/0189182	A1	8/2007	Berkman et al.
2007/0211689	A1	9/2007	Campero et al.
2007/0211786	A1	9/2007	Shattil et al.
2007/0216596	A1	9/2007	Lewis et al.
2007/0226779	A1	9/2007	Yokomitsu et al.
2007/0252998	A1	11/2007	Berthold et al.
2007/0257858	A1	11/2007	Liu et al.
2007/0258484	A1	11/2007	Tolaio et al.
2007/0268124	A1	11/2007	Berkman et al.
2007/0268846	A1	11/2007	Proctor et al.
2007/0300280	A1	12/2007	Turner et al.
2008/0002652	A1	1/2008	Gupta et al.
2008/0003872	A1	1/2008	Chen et al.
2008/0007416	A1	1/2008	Cern et al.
2008/0043655	A1	2/2008	Lee et al.
2008/0055149	A1	3/2008	Rees et al.
2008/0060832	A1	3/2008	Razavi et al.
2008/0064331	A1	3/2008	Washiro et al.
2008/0077336	A1	3/2008	Fernandes et al.
2008/0080389	A1	4/2008	Hart et al.
2008/0084937	A1	4/2008	Barthold et al.
2008/0094298	A1	4/2008	Kralovec et al.
2008/0120667	A1	5/2008	Zaltsman
2008/0122723	A1	5/2008	Rofougaran et al.
2008/0130639	A1	6/2008	Costa-Requena et al.
2008/0143491	A1	6/2008	Deaver et al.
2008/0150790	A1	6/2008	Voigtlaender et al.
2008/0153416	A1	6/2008	Washiro et al.
2008/0191851	A1	8/2008	Koga et al.
2008/0211727	A1	9/2008	Elmore et al.
2008/0247716	A1	10/2008	Thomas et al.
2008/0252522	A1	10/2008	Asbridge et al.
2008/0253723	A1	10/2008	Stokes et al.
2008/0255782	A1	10/2008	Bilac et al.
2008/0258993	A1	10/2008	Gummalla et al.
2008/0266060	A1	10/2008	Takei et al.
2008/0267076	A1	10/2008	Laperi et al.
2008/0279199	A1	11/2008	Park et al.
2008/0280574	A1	11/2008	Rofougaran et al.
2008/0313691	A1	12/2008	Cholas
2009/0002137	A1	1/2009	Radtke et al.
2009/0007189	A1	1/2009	Gutknecht
2009/0007190	A1	1/2009	Weber et al.
2009/0007194	A1	1/2009	Brady, Jr. et al.
2009/0009408	A1	1/2009	Rofougaran et al.
2009/0015239	A1	1/2009	Georgiou et al.
2009/0054737	A1	2/2009	Magar et al.
2009/0061940	A1	3/2009	Scheinert et al.
2009/0067441	A1	3/2009	Ansari et al.
2009/0079660	A1	3/2009	Elmore
2009/0085726	A1	4/2009	Radtke et al.
2009/0093267	A1	4/2009	Ariyur et al.
2009/0109981	A1	4/2009	Keselman
2009/0129301	A1	5/2009	Belimpasakis et al.
2009/0138931	A1	5/2009	Lin et al.
2009/0140852	A1	6/2009	Stolarczyk et al.
2009/0144417	A1	6/2009	Kisel et al.
2009/0171780	A1	7/2009	Aldrey et al.
2009/0175195	A1	7/2009	Macauley et al.
2009/0201133	A1	8/2009	Bruns et al.
2009/0202020	A1	8/2009	Hafeez et al.
2009/0210901	A1	8/2009	Hawkins et al.
2009/0250449	A1	10/2009	Petrenko et al.
2009/0254971	A1	10/2009	Herz et al.
2009/0258652	A1	10/2009	Lambert et al.
2009/0284435	A1	11/2009	Elmore et al.
2009/0286482	A1	11/2009	Gorokhov et al.
2009/0311960	A1	12/2009	Farahani et al.
2009/0315668	A1	12/2009	Leete, III et al.
2009/0325479	A1	12/2009	Chakrabarti et al.
2009/0325628	A1	12/2009	Becker et al.
2010/0002618	A1	1/2010	Eichinger et al.
2010/0002731	A1	1/2010	Kimura et al.
2010/0026607	A1	2/2010	Imai et al.
2010/0039339	A1	2/2010	Kuroda et al.
2010/0045447	A1	2/2010	Mollenkopf et al.
2010/0052799	A1	3/2010	Watanabe et al.
2010/0053019	A1	3/2010	Ikawa et al.
2010/0057894	A1	3/2010	Glasser
2010/0080203	A1	4/2010	Reynolds et al.
2010/0085036	A1	4/2010	Banting et al.
2010/0090887	A1	4/2010	Cooper et al.
2010/0100918	A1	4/2010	Egan, Jr. et al.
2010/0111521	A1	5/2010	Kim et al.
2010/0119234	A1	5/2010	Suematsu et al.
2010/0121945	A1	5/2010	Gerber et al.
2010/0127848	A1	5/2010	Mustapha et al.
2010/0142435	A1	6/2010	Kim et al.
2010/0150215	A1	6/2010	Black et al.
2010/0153990	A1	6/2010	Ress et al.
2010/0169937	A1	7/2010	Atwal et al.
2010/0175080	A1	7/2010	Yuen et al.
2010/0176894	A1	7/2010	Tahara et al.
2010/0177894	A1	7/2010	Yasuma et al.
2010/0185614	A1	7/2010	O'Brien et al.
2010/0201313	A1	8/2010	Vorenkamp et al.
2010/0214183	A1	8/2010	Stoneback et al.
2010/0214185	A1	8/2010	Sammoura et al.
2010/0224732	A1	9/2010	Olson et al.
2010/0225426	A1	9/2010	Unger et al.
2010/0232539	A1	9/2010	Han et al.
2010/0243633	A1	9/2010	Huynh et al.
2010/0253450	A1	10/2010	Kim et al.
2010/0265877	A1	10/2010	Foxworthy et al.
2010/0266063	A1	10/2010	Harel et al.
2010/0283693	A1	11/2010	Xie et al.
2010/0284446	A1	11/2010	Mu et al.
2010/0319068	A1	12/2010	Abbadessa et al.

(56) **References Cited**

U.S. PATENT DOCUMENTS

2010/0327880 A1 12/2010 Stein et al.
2011/0018704 A1 1/2011 Burrows et al.
2011/0040861 A1 2/2011 Van Der Merwe et al.
2011/0042120 A1 2/2011 Otsuka et al.
2011/0043051 A1 2/2011 Meskens et al.
2011/0053498 A1 3/2011 Nogueira-Nine
2011/0068893 A1 3/2011 Lahiri et al.
2011/0068988 A1 3/2011 Monte et al.
2011/0083399 A1 4/2011 Lettkeman et al.
2011/0107364 A1 5/2011 Lajoie et al.
2011/0109936 A1 5/2011 Coffee et al.
2011/0110404 A1 5/2011 Washiro
2011/0118888 A1 5/2011 White, II
2011/0132658 A1 6/2011 Miller, II et al.
2011/0133865 A1 6/2011 Miller, II et al.
2011/0133867 A1 6/2011 Miller, II et al.
2011/0136432 A1 6/2011 Miller, II et al.
2011/0140911 A1 6/2011 Pant et al.
2011/0141555 A1 6/2011 Fermann et al.
2011/0148578 A1 6/2011 Aloi et al.
2011/0164514 A1 7/2011 Afkhamie et al.
2011/0165847 A1 7/2011 Kawasaki et al.
2011/0169336 A1 7/2011 Yerazunis et al.
2011/0172000 A1 7/2011 Quigley et al.
2011/0173447 A1 7/2011 Zhang et al.
2011/0187578 A1 8/2011 Farneth et al.
2011/0199265 A1 8/2011 Lin et al.
2011/0208450 A1 8/2011 Salka et al.
2011/0214176 A1 9/2011 Burch et al.
2011/0219402 A1 9/2011 Candelore et al.
2011/0220394 A1 9/2011 Szylakowski et al.
2011/0225046 A1 9/2011 Eldering et al.
2011/0228814 A1 9/2011 Washiro et al.
2011/0268085 A1 11/2011 Barany et al.
2011/0274396 A1 11/2011 Nakajima et al.
2011/0291878 A1 12/2011 McLaughlin et al.
2011/0294509 A1 12/2011 Kim et al.
2011/0311231 A1 12/2011 Ridgway et al.
2012/0002973 A1 1/2012 Bruzzi et al.
2012/0015654 A1 1/2012 Palanki et al.
2012/0019420 A1 1/2012 Caimi et al.
2012/0038520 A1 2/2012 Cornwell et al.
2012/0039366 A1 2/2012 Wood et al.
2012/0046891 A1 2/2012 Yaney et al.
2012/0068903 A1 3/2012 Thevenard et al.
2012/0077485 A1 3/2012 Shin et al.
2012/0078452 A1 3/2012 Daum et al.
2012/0084807 A1 4/2012 Thompson et al.
2012/0091820 A1 4/2012 Campanella et al.
2012/0092161 A1 4/2012 West et al.
2012/0093078 A1 4/2012 Perlman et al.
2012/0102568 A1 4/2012 Tarbotton et al.
2012/0105246 A1 5/2012 Sexton et al.
2012/0105637 A1 5/2012 Yousefi et al.
2012/0117584 A1 5/2012 Gordon
2012/0129566 A1 5/2012 Lee et al.
2012/0133373 A1 5/2012 Ali et al.
2012/0144420 A1 6/2012 Del Sordo et al.
2012/0153087 A1 6/2012 Collette et al.
2012/0154239 A1 6/2012 Bar-Sade et al.
2012/0161543 A1 6/2012 Reuven et al.
2012/0181258 A1 7/2012 Shan et al.
2012/0197558 A1 8/2012 Henig et al.
2012/0201145 A1 8/2012 Ree et al.
2012/0214538 A1 8/2012 Kim et al.
2012/0224807 A1 9/2012 Winzer et al.
2012/0226394 A1 9/2012 Marcus et al.
2012/0235864 A1 9/2012 Lu et al.
2012/0235881 A1 9/2012 Pan et al.
2012/0250534 A1 10/2012 Langer et al.
2012/0250752 A1 10/2012 McHann et al.
2012/0263152 A1 10/2012 Fischer et al.
2012/0268340 A1 10/2012 Capozzoli et al.
2012/0272741 A1 11/2012 Xiao et al.
2012/0274528 A1 11/2012 McMahon et al.
2012/0287922 A1 11/2012 Heck et al.
2012/0299671 A1 11/2012 Ikeda et al.
2012/0304294 A1 11/2012 Fujiwara et al.
2012/0306587 A1 12/2012 Strid et al.
2012/0306708 A1 12/2012 Henderson et al.
2012/0322492 A1 12/2012 Koo et al.
2012/0324018 A1 12/2012 Metcalf et al.
2012/0327908 A1 12/2012 Gupta et al.
2012/0329523 A1 12/2012 Stewart et al.
2012/0330756 A1 12/2012 Morris et al.
2013/0002409 A1 1/2013 Molina et al.
2013/0003876 A1 1/2013 Bennett
2013/0010679 A1 1/2013 Ma et al.
2013/0015922 A1 1/2013 Liu et al.
2013/0016022 A1 1/2013 Heiks et al.
2013/0023302 A1 1/2013 Vasudevan et al.
2013/0039624 A1 2/2013 Scherer et al.
2013/0064178 A1 3/2013 Cs et al.
2013/0064311 A1 3/2013 Turner et al.
2013/0070621 A1 3/2013 Marzetta et al.
2013/0077664 A1 3/2013 Lee et al.
2013/0080290 A1 3/2013 Kamm
2013/0086639 A1 4/2013 Sondhi et al.
2013/0093638 A1 4/2013 Shoemaker et al.
2013/0095875 A1 4/2013 Reuven et al.
2013/0108206 A1 5/2013 Sasaoka et al.
2013/0109317 A1 5/2013 Kikuchi et al.
2013/0117852 A1 5/2013 Stute et al.
2013/0122828 A1 5/2013 Choi et al.
2013/0124365 A1 5/2013 Pradeep
2013/0127678 A1 5/2013 Chandler et al.
2013/0136410 A1 5/2013 Sasaoka et al.
2013/0144750 A1 6/2013 Brown
2013/0159856 A1 6/2013 Ferren
2013/0160122 A1 6/2013 Choi et al.
2013/0162490 A1 6/2013 Blech et al.
2013/0166690 A1 6/2013 Shatzkamer et al.
2013/0169499 A1 7/2013 Lin et al.
2013/0173807 A1 7/2013 De Groot et al.
2013/0182804 A1 7/2013 Yutaka et al.
2013/0187636 A1 7/2013 Kast et al.
2013/0201904 A1 8/2013 Toskala et al.
2013/0207859 A1 8/2013 Legay et al.
2013/0234904 A1 9/2013 Blech et al.
2013/0235845 A1 9/2013 Kovvali et al.
2013/0235871 A1 9/2013 Brzozowski et al.
2013/0262656 A1 10/2013 Cao et al.
2013/0262857 A1 10/2013 Neuman et al.
2013/0263263 A1 10/2013 Narkolayev et al.
2013/0265732 A1 10/2013 Herbsommer et al.
2013/0279523 A1 10/2013 Denney et al.
2013/0279561 A1 10/2013 Jin et al.
2013/0279868 A1 10/2013 Zhang et al.
2013/0305369 A1 11/2013 Karta et al.
2013/0306351 A1 11/2013 Lambert et al.
2013/0311661 A1 11/2013 McPhee
2013/0314182 A1 11/2013 Takeda et al.
2013/0321225 A1 12/2013 Pettus et al.
2013/0326063 A1 12/2013 Burch et al.
2013/0326494 A1 12/2013 Nunez et al.
2013/0330050 A1 12/2013 Yang et al.
2013/0335165 A1 12/2013 Arnold et al.
2013/0341094 A1 12/2013 Taherian et al.
2013/0342287 A1 12/2013 Randall et al.
2013/0343213 A1 12/2013 Reynolds et al.
2013/0343351 A1 12/2013 Sambhwani et al.
2014/0003394 A1 1/2014 Rubin et al.
2014/0003775 A1 1/2014 Ko et al.
2014/0007076 A1 1/2014 Kim et al.
2014/0009270 A1 1/2014 Yamazaki et al.
2014/0009822 A1 1/2014 Dong et al.
2014/0015705 A1 1/2014 Ebihara et al.
2014/0019576 A1 1/2014 Lobo et al.
2014/0026170 A1 1/2014 Francisco et al.
2014/0028184 A1 1/2014 Voronin et al.
2014/0028190 A1 1/2014 Voronin et al.
2014/0028532 A1 1/2014 Ehrenberg et al.
2014/0032005 A1 1/2014 Iwamura
2014/0036694 A1 2/2014 Courtice et al.

(56) **References Cited**

U.S. PATENT DOCUMENTS

2014/0041925 A1 2/2014 Siripurapu et al.
2014/0043189 A1 2/2014 Lee et al.
2014/0043977 A1 2/2014 Wiley et al.
2014/0044139 A1 2/2014 Dong et al.
2014/0052810 A1 2/2014 Osorio et al.
2014/0071818 A1 3/2014 Wang et al.
2014/0072299 A1 3/2014 Stapleton et al.
2014/0077995 A1 3/2014 Artemenko et al.
2014/0086080 A1 3/2014 Hui et al.
2014/0086152 A1 3/2014 Bontu et al.
2014/0124236 A1 5/2014 Vu et al.
2014/0126914 A1 5/2014 Berlin et al.
2014/0130111 A1 5/2014 Nulty et al.
2014/0132728 A1 5/2014 Verano et al.
2014/0139375 A1 5/2014 Faragher et al.
2014/0143055 A1 5/2014 Johnson
2014/0155054 A1 6/2014 Henry et al.
2014/0165145 A1 6/2014 Baentsch et al.
2014/0169186 A1 6/2014 Zhu et al.
2014/0179302 A1 6/2014 Polehn et al.
2014/0189677 A1 7/2014 Curzi et al.
2014/0189732 A1 7/2014 Shkedi et al.
2014/0191913 A1 7/2014 Ge et al.
2014/0204754 A1 7/2014 Jeong et al.
2014/0207844 A1 7/2014 Mayo et al.
2014/0208272 A1 7/2014 Vats et al.
2014/0222997 A1 8/2014 Mermoud et al.
2014/0223527 A1 8/2014 Bortz et al.
2014/0225129 A1 8/2014 Inoue et al.
2014/0227905 A1 8/2014 Knott et al.
2014/0227966 A1 8/2014 Artemenko et al.
2014/0233900 A1 8/2014 Hugonnot et al.
2014/0241718 A1 8/2014 Jiang et al.
2014/0254516 A1 9/2014 Lee et al.
2014/0254896 A1 9/2014 Zhou et al.
2014/0254979 A1 9/2014 Zhang et al.
2014/0266946 A1 9/2014 Stevenson et al.
2014/0269260 A1 9/2014 Xue et al.
2014/0269972 A1 9/2014 Rada et al.
2014/0285277 A1 9/2014 Herbsommer et al.
2014/0285293 A1 9/2014 Schuppener et al.
2014/0285389 A1 9/2014 Fakharzadeh et al.
2014/0286189 A1 9/2014 Kang et al.
2014/0287702 A1 9/2014 Schuppener et al.
2014/0299349 A1 10/2014 Yamaguchi et al.
2014/0304498 A1 10/2014 Gonuguntla et al.
2014/0317229 A1 10/2014 Hughes et al.
2014/0320364 A1 10/2014 Gu et al.
2014/0321273 A1 10/2014 Morrill et al.
2014/0334773 A1 11/2014 Mathai et al.
2014/0334789 A1 11/2014 Matsuo et al.
2014/0351571 A1 11/2014 Jacobs
2014/0355525 A1 12/2014 Willis, III et al.
2014/0355989 A1 12/2014 Finkelstein
2014/0357269 A1 12/2014 Zhou et al.
2014/0359275 A1 12/2014 Murugesan et al.
2014/0362374 A1 12/2014 Santori
2014/0362694 A1 12/2014 Rodriques
2014/0369430 A1 12/2014 Parnell
2014/0372068 A1 12/2014 Seto et al.
2014/0373053 A1 12/2014 Leley et al.
2014/0376655 A1 12/2014 Ruan et al.
2015/0008996 A1 1/2015 Jessup et al.
2015/0009089 A1 1/2015 Pesa
2015/0016260 A1 1/2015 Chow et al.
2015/0017473 A1 1/2015 Verhoeven et al.
2015/0022399 A1 1/2015 Clymer et al.
2015/0026460 A1 1/2015 Walton
2015/0029065 A1 1/2015 Cheng
2015/0036610 A1 2/2015 Kim et al.
2015/0042526 A1 2/2015 Zeine
2015/0048238 A1 2/2015 Kawai
2015/0061859 A1 3/2015 Matsuoka et al.
2015/0065166 A1 3/2015 Ward et al.
2015/0070231 A1 3/2015 Park et al.
2015/0071594 A1 3/2015 Register
2015/0073594 A1 3/2015 Trujillo et al.
2015/0077740 A1 3/2015 Fuse
2015/0084703 A1 3/2015 Sanduleanu
2015/0084814 A1 3/2015 Rojanski et al.
2015/0091650 A1 4/2015 Nobbe
2015/0094104 A1 4/2015 Wilmhoff et al.
2015/0099555 A1 4/2015 Krishnaswamy et al.
2015/0102972 A1 4/2015 Scire-Scappuzzo et al.
2015/0104005 A1 4/2015 Holman
2015/0109178 A1 4/2015 Hyde et al.
2015/0116154 A1 4/2015 Artemenko
2015/0122886 A1 5/2015 Koch
2015/0126107 A1 5/2015 Bennett et al.
2015/0130675 A1 5/2015 Parsche
2015/0138022 A1 5/2015 Takahashi
2015/0153248 A1 6/2015 Hayward et al.
2015/0156266 A1 6/2015 Gupta
2015/0162988 A1 6/2015 Henry et al.
2015/0172036 A1 6/2015 Katar et al.
2015/0181449 A1 6/2015 Didenko et al.
2015/0195349 A1 7/2015 Cardamore
2015/0195719 A1 7/2015 Rahman
2015/0201228 A1 7/2015 Hasek
2015/0207527 A1 7/2015 Eliaz et al.
2015/0214615 A1 7/2015 Patel et al.
2015/0215268 A1 7/2015 Dinha
2015/0223078 A1 8/2015 Bennett et al.
2015/0223113 A1 8/2015 Matsunaga
2015/0236778 A1 8/2015 Jalali
2015/0236779 A1 8/2015 Jalali
2015/0249965 A1 9/2015 Dussmann et al.
2015/0271830 A1 9/2015 Shin et al.
2015/0276577 A1 10/2015 Ruege et al.
2015/0280328 A1 10/2015 Sanford et al.
2015/0284079 A1 10/2015 Matsuda
2015/0304045 A1 10/2015 Henry et al.
2015/0304869 A1 10/2015 Johnson et al.
2015/0312774 A1 10/2015 Lau
2015/0318610 A1 11/2015 Lee et al.
2015/0326274 A1 11/2015 Flood
2015/0333804 A1 11/2015 Yang et al.
2015/0339912 A1 11/2015 Farrand et al.
2015/0344136 A1 12/2015 Dahlstrom
2015/0356482 A1 12/2015 Whipple et al.
2015/0370251 A1 12/2015 Siegel et al.
2015/0373557 A1 12/2015 Bennett et al.
2016/0006129 A1 1/2016 Haziza
2016/0014749 A1 1/2016 Kang et al.
2016/0038074 A1 2/2016 Brown et al.
2016/0050028 A1 2/2016 Henry et al.
2016/0063642 A1 3/2016 Luciani et al.
2016/0064794 A1 3/2016 Henry et al.
2016/0065252 A1 3/2016 Preschutti
2016/0065335 A1 3/2016 Koo et al.
2016/0066191 A1 3/2016 Li
2016/0068265 A1 3/2016 Hoareau et al.
2016/0068277 A1 3/2016 Manitta
2016/0069934 A1 3/2016 Saxby et al.
2016/0069935 A1 3/2016 Kreikebaum et al.
2016/0070265 A1 3/2016 Liu et al.
2016/0079769 A1 3/2016 Corum et al.
2016/0079809 A1 3/2016 Corum et al.
2016/0080035 A1* 3/2016 Fuchs H01P 3/16
375/257
2016/0080839 A1 3/2016 Fuchs et al.
2016/0082460 A1 3/2016 McMaster et al.
2016/0087344 A1 3/2016 Artemenko et al.
2016/0088498 A1 3/2016 Sharawi
2016/0094420 A1 3/2016 Clemm et al.
2016/0094879 A1 3/2016 Gerszberg et al.
2016/0099749 A1 4/2016 Bennett
2016/0100324 A1 4/2016 Henry et al.
2016/0105218 A1 4/2016 Henry et al.
2016/0105233 A1 4/2016 Jalali
2016/0105239 A1 4/2016 Henry et al.
2016/0105255 A1 4/2016 Henry et al.
2016/0112092 A1 4/2016 Henry et al.
2016/0112093 A1 4/2016 Barzegar

(56) **References Cited**

U.S. PATENT DOCUMENTS

2016/0112094	A1	4/2016	Stuckman et al.	
2016/0112115	A1	4/2016	Henry et al.	
2016/0112132	A1	4/2016	Henry et al.	
2016/0112133	A1	4/2016	Henry et al.	
2016/0112135	A1	4/2016	Henry et al.	
2016/0112263	A1	4/2016	Henry et al.	
2016/0116914	A1	4/2016	Mucci	
2016/0131347	A1	5/2016	Hill et al.	
2016/0134006	A1	5/2016	Ness et al.	
2016/0137311	A1	5/2016	Peverill et al.	
2016/0149312	A1*	5/2016	Henry	H01Q 21/00 343/893
2016/0149614	A1*	5/2016	Barzegar	H04B 3/52 375/257
2016/0149636	A1*	5/2016	Gerszberg	H04B 3/56 398/5
2016/0149665	A1*	5/2016	Henry	H04B 3/52 398/44
2016/0149731	A1*	5/2016	Henry	H04B 7/0413 375/231
2016/0149753	A1*	5/2016	Gerszberg	H04B 10/25752 370/242
2016/0150427	A1	5/2016	Ramanath	
2016/0164571	A1*	6/2016	Bennett	H04B 3/03 375/257
2016/0164573	A1*	6/2016	Birk	H02J 13/002 375/222
2016/0165472	A1	6/2016	Gopalakrishnan et al.	
2016/0165478	A1	6/2016	Yao et al.	
2016/0181701	A1	6/2016	Sangaran et al.	
2016/0182161	A1*	6/2016	Barzegar	H04B 3/546 375/256
2016/0182981	A1	6/2016	Minarik et al.	
2016/0189101	A1	6/2016	Kantor et al.	
2016/0197392	A1	7/2016	Henry et al.	
2016/0197409	A1	7/2016	Henry et al.	
2016/0197630	A1	7/2016	Kawasaki	
2016/0197642	A1	7/2016	Henry et al.	
2016/0207627	A1	7/2016	Hoareau et al.	
2016/0214717	A1	7/2016	De Silva	
2016/0218407	A1	7/2016	Henry et al.	
2016/0221039	A1*	8/2016	Fuchs	B06B 1/18
2016/0226681	A1	8/2016	Henry et al.	
2016/0244165	A1	8/2016	Patrick et al.	
2016/0248165	A1	8/2016	Henry	
2016/0248509	A1*	8/2016	Henry	H04B 3/36
2016/0261309	A1	9/2016	Henry	
2016/0261310	A1	9/2016	Fuchs et al.	
2016/0261312	A1	9/2016	Fuchs et al.	
2016/0269156	A1	9/2016	Barzegar et al.	
2016/0276725	A1	9/2016	Barnickel et al.	
2016/0285508	A1	9/2016	Bennett et al.	
2016/0285512	A1	9/2016	Henry et al.	
2016/0294444	A1	10/2016	Gerszberg et al.	
2016/0294517	A1	10/2016	Barzegar et al.	
2016/0295431	A1	10/2016	Henry et al.	
2016/0315660	A1	10/2016	Henry	
2016/0315661	A1	10/2016	Henry	
2016/0315662	A1	10/2016	Henry	

FOREIGN PATENT DOCUMENTS

AU	2005227368	B2	2/2009
AU	2010101079A 4		11/2010
AU	201400748		3/2014
AU	2014200748	A1	3/2014
CA	1136267	A1	11/1982
CA	1211813	A1	9/1986
CA	1328009	C	3/1994
CA	2260380	C	12/2000
CA	2449596	A1	6/2005
CA	2515560	A1	2/2007
CA	2664573	A1	4/2008
CA	2467988	C	11/2010
CA	2777147	A1	4/2011
CA	2814529	A1	4/2012
CA	2787580	A1	2/2013
CA	2927054	A1	5/2015
CN	1155354	C	7/1997
CN	1288717	A	7/1997
CN	1126425	C	10/2003
CN	2730033	Y	9/2005
CN	1833397	A	9/2006
CN	1885736	A	12/2006
CN	201048157	Y	4/2008
CN	201146495	Y	11/2008
CN	100502181	C	6/2009
CN	201282193	Y	7/2009
CN	101834011	U	4/2010
CN	1823275	B	5/2010
CN	101785201	A	7/2010
CN	1820482	B	12/2010
CN	101075702	B	2/2011
CN	102130698	A	7/2011
CN	102136634	A	7/2011
CN	102208716	A	10/2011
CN	102280704	A	12/2011
CN	102280709	A	12/2011
CN	202093126	U	12/2011
CN	102351415	A	2/2012
CN	102396111	A	3/2012
CN	202253536	U	5/2012
CN	102694351	A	9/2012
CN	101662076	B	11/2012
CN	102017692	B	4/2013
CN	103078673	A	5/2013
CN	103117118	A	5/2013
CN	103163881	A	6/2013
CN	203204743	U	9/2013
CN	1863244	B	10/2013
CN	101958461	B	11/2013
CN	103700442		4/2014
CN	103700442	A	4/2014
CN	103943925	A	7/2014
CN	104052742	A	9/2014
CN	203813973	U	9/2014
CN	104091987	A	10/2014
CN	203931626	U	11/2014
CN	203950607	U	11/2014
CN	104181552	A	12/2014
CN	204538183		8/2015
CN	204760545	U	11/2015
CN	205265924		1/2016
CN	105359572	A	2/2016
CN	105453340		3/2016
CN	105594138	A	5/2016
DE	3504546	A1	8/1986
DE	3533204	A1	3/1987
DE	3533211	A1	3/1987
DE	3827956	A1	3/1989
DE	4225595	C1	9/1993
DE	19501448	A1	7/1996
DE	69732676	T2	4/2006
DE	102007049914	A1	4/2009
DE	102012203816	A1	9/2013
EP	0102846		3/1984
EP	0110478		6/1984
EP	0136818		4/1985
EP	0280379		8/1988
EP	0330303		8/1989
EP	0331248		9/1989
EP	0342149		11/1989
EP	0391719		4/1990
EP	425979	A2	5/1991
EP	0485467		5/1992
EP	2116969		5/1992
EP	0651487		10/1994
EP	0371660		4/1996
EP	0756392		1/1997
EP	834722	A2	4/1998
EP	0840464		5/1998
EP	0871241	B1	10/1998
EP	0890132		1/1999

(56) **References Cited**

FOREIGN PATENT DOCUMENTS

EP	755092	A3	4/1999
EP	0896380		10/1999
EP	676648	B1	5/2000
EP	1085599	A2	3/2001
EP	0907983	B1	6/2001
EP	0756786		8/2001
EP	1127283	A1	8/2001
EP	1129550	A1	9/2001
EP	1184930	A1	3/2002
EP	1195847	A2	4/2002
EP	1296146	A1	3/2003
EP	0772061		7/2003
EP	1346431	A1	9/2003
EP	1249056	B1	1/2004
EP	1376755	A1	1/2004
EP	1401048	A1	3/2004
EP	1237303	A2	9/2004
EP	1454422	A1	9/2004
EP	1488397	A1	12/2004
EP	1509970		3/2005
EP	1371108	B1	6/2005
EP	1550327	A2	7/2005
EP	1341255	B8	8/2005
EP	1577687	A1	9/2005
EP	1608110	A1	12/2005
EP	1624685	A2	2/2006
EP	1642468	A2	4/2006
EP	1608110	B1	10/2006
EP	1793508	A1	6/2007
EP	1898532	A2	3/2008
EP	1930982	A1	6/2008
EP	1953940	A1	8/2008
EP	2165550	A1	3/2010
EP	1166599	B1	5/2010
EP	2404347	A2	1/2012
EP	2472671	A1	7/2012
EP	1817855	B1	1/2013
EP	2568528	A2	3/2013
EP	2472737	B1	9/2013
EP	2016643	B1	7/2014
EP	2760081	A1	7/2014
EP	2804259	A1	11/2014
EP	2846480	A1	3/2015
EP	2850695	A1	3/2015
EP	2854361	A1	4/2015
EP	2870802	A1	5/2015
FR	2119804	A1	8/1972
FR	2214161	A1	8/1974
FR	2691602	A1	11/1993
FR	2849728	A1	7/2004
FR	2946466	B1	3/2012
FR	2986376	B1	10/2014
FR	3034203		9/2016
GB	175489	A	2/1922
GB	462804	A	3/1937
GB	529290	A	11/1940
GB	640181	A	7/1950
GB	663166	A	12/1951
GB	667290	A	2/1952
GB	682817	A	11/1952
GB	731473	A	6/1955
GB	746111	A	3/1956
GB	751153	A	6/1956
GB	767506	A	2/1957
GB	835976	A	6/1960
GB	845492	A	8/1960
GB	859951	A	1/1961
GB	889856	A	2/1962
GB	993561	A	5/1965
GB	1004318	A	9/1965
GB	1076772	A	7/1967
GB	1141390	A	1/1969
GB	1298387	A	11/1972
GB	1383549	A	2/1974
GB	1370669	A	10/1974
GB	1422956	A	1/1976
GB	1468310	A	3/1977
GB	1527228	A	10/1978
GB	2010528	A	6/1979
GB	2045055	A	10/1980
GB	1580627	A	12/1980
GB	2368468	A	5/2002
GB	2393370	A	3/2004
GB	2394364	B	6/2005
GB	2414862	A	12/2005
GB	2411554	B	1/2006
GB	705192		4/2007
GB	714974		9/2007
GB	718597		10/2007
GB	2474037	A	4/2011
GB	2474605	B	9/2011
GB	2485355	A	5/2012
GB	2507269	A	4/2014
IN	7352/CHENP/2015	A	7/2016
IN	201647015348	A	8/2016
JP	S50109642		9/1975
JP	55124303	U	9/1980
JP	55138902	U	10/1980
JP	574601		1/1982
JP	61178682	U	11/1986
JP	61260702	A	11/1986
JP	03167906	A	7/1991
JP	0653894		8/1991
JP	3001844	U	9/1994
JP	7212126		11/1995
JP	08167810	A	6/1996
JP	08196022	A	7/1996
JP	08316918	A	11/1996
JP	2595339	B2	4/1997
JP	2639531	B2	8/1997
JP	11239085	A	8/1999
JP	11313022	A	11/1999
JP	2000077889	A	3/2000
JP	2000216623	A	8/2000
JP	2002029247	A	1/2002
JP	2003008336	A	1/2003
JP	03057464	A	2/2003
JP	3411428	B2	6/2003
JP	2003324309	A	11/2003
JP	3480153	B2	12/2003
JP	2004521379	A	7/2004
JP	2004253853	A	9/2004
JP	2004297107	A	10/2004
JP	2004304659	A	10/2004
JP	2005110231	A	4/2005
JP	3734975	B2	1/2006
JP	2006153878	A	6/2006
JP	2006166399	A	6/2006
JP	3938315	B2	6/2007
JP	2007174017	A	7/2007
JP	2007259001	A	10/2007
JP	4025674	B2	12/2007
JP	2008017263	A	1/2008
JP	2008021483	A	1/2008
JP	4072280	B2	4/2008
JP	2009004986	A	1/2009
JP	4252573	B2	4/2009
JP	4259760	B2	4/2009
JP	2009124229	A	6/2009
JP	2010045471	A	2/2010
JP	2010192992	A	9/2010
JP	2010541468	A	12/2010
JP	2012090242	A	5/2012
JP	2012205104	A	10/2012
JP	2013046412	A	3/2013
JP	2013110503	A	6/2013
JP	2014045237	A	3/2014
JP	5475475	B2	4/2014
JP	5497348	B2	5/2014
JP	2015188174		10/2015
KR	20000074034		12/2000
KR	200425873	Y1	9/2006
KR	100636388	B1	10/2006
KR	100849702	B1	7/2008

(56) **References Cited**

FOREIGN PATENT DOCUMENTS

KR	100952976	B1	4/2010
KR	100989064	B1	10/2010
KR	101060584	B1	8/2011
KR	101070364	B1	9/2011
KR	101212354	B1	12/2012
KR	101288770	B1	7/2013
KR	20140104097	A	8/2014
KR	101435538	B1	9/2014
KR	101447809	B1	10/2014
KR	20150087455		7/2015
KR	200479199	Y1	12/2015
KR	101606803		1/2016
KR	101607420	B1	3/2016
NL	69072		1/1945
RU	2129746	C1	4/1999
RU	2432647	C1	10/2011
WO	8301711	A1	5/1983
WO	9116770	A1	10/1991
WO	9210014		6/1992
WO	9323928		11/1993
WO	9424467	A1	10/1994
WO	9529537		11/1995
WO	9529537	A1	11/1995
WO	9619089		6/1996
WO	WO 96/41157		12/1996
WO	9735387	A1	9/1997
WO	9737445	A1	10/1997
WO	9829853	A1	7/1998
WO	9859254	A1	12/1998
WO	WO 98/57207		12/1998
WO	9948230	A1	9/1999
WO	9967903	A1	12/1999
WO	0131746	A1	5/2000
WO	0070891	A1	11/2000
WO	0074428	A1	12/2000
WO	WO0114985	A1	3/2001
WO	0128159	A2	4/2001
WO	0145206	A1	6/2001
WO	0261467	A2	8/2002
WO	03/005629		1/2003
WO	03009083		1/2003
WO	03026166		3/2003
WO	03044981	A1	5/2003
WO	03088418		10/2003
WO	03099740	A1	12/2003
WO	2004011995	A1	2/2004
WO	2004038891	A2	2/2004
WO	2004/051804		6/2004
WO	2004051804	A1	6/2004
WO	2004054159	A2	6/2004
WO	2004077746	A1	9/2004
WO	2005015686	A1	2/2005
WO	2005072469	A2	8/2005
WO	2006012610	A2	2/2006
WO	2006085804	A1	8/2006
WO	2006102419	A2	9/2006
WO	2006111809	A1	10/2006
WO	2006116396	A2	11/2006
WO	2006125279	A1	11/2006
WO	2006050331	A3	3/2007
WO	2007031435	A1	3/2007
WO	2007071797	A1	6/2007
WO	2007148097	A2	12/2007
WO	2008003939	A1	1/2008
WO	2008061107	A2	5/2008
WO	2008070957	A1	6/2008
WO	2008117973	A1	10/2008
WO	2009014704	A1	1/2009
WO	2007098061	A3	2/2009
WO	2009035285	A2	3/2009
WO	2009090602	A1	7/2009
WO	2009123404	A4	10/2009
WO	2010017549	A1	2/2010
WO	2010147806	A1	12/2010
WO	2011032605	A1	3/2011
WO	2011085650	A1	7/2011
WO	2011137793	A1	11/2011
WO	2012/007831		1/2012
WO	2012038816	A1	3/2012
WO	2012172565	A1	12/2012
WO	2013013162	A2	1/2013
WO	2013013465	A1	1/2013
WO	WO 2013/017822		2/2013
WO	2013035110	A2	3/2013
WO	2013/073548		5/2013
WO	2013073548	A1	5/2013
WO	2013100912	A1	7/2013
WO	2013115802	A1	8/2013
WO	2013123445	A1	8/2013
WO	2013/138627		9/2013
WO	2014/045236		9/2013
WO	2013136213	A1	9/2013
WO	2013138627	A1	9/2013
WO	2013157978	A1	10/2013
WO	2014/018434		1/2014
WO	2014011438	A1	1/2014
WO	2014018434	A2	1/2014
WO	2014065952	A1	5/2014
WO	2014069941	A1	5/2014
WO	2014083500	A1	6/2014
WO	2014096868	A1	6/2014
WO	2014099340	A2	6/2014
WO	2013076499	A3	7/2014
WO	2014128253	A1	8/2014
WO	2014145862	A2	9/2014
WO	2014197926	A1	12/2014
WO	2015002658	A1	1/2015
WO	2015006636	A1	1/2015
WO	2015027033	A1	2/2015
WO	2015035463	A1	3/2015
WO	2015/055230		4/2015
WO	2015052478		4/2015
WO	2015052480		4/2015
WO	2015069431	A2	5/2015
WO	2015077644		5/2015
WO	2015088650	A1	6/2015
WO	2015120626		8/2015
WO	2015197580	A1	12/2015
WO	2016003291	A1	1/2016
WO	2016009402	A2	1/2016
WO	WO 2016/012889		1/2016
WO	2016/043949		3/2016
WO	2016032592	A1	3/2016
WO	2016043949	A1	3/2016
WO	2016048214	A1	3/2016
WO	2016053572	A1	4/2016
WO	2016060761	A1	4/2016
WO	2016060762	A1	4/2016
WO	2016061021	A1	4/2016
WO	2016064505	A1	4/2016
WO	2016064516	A1	4/2016
WO	WO 2016/064502		4/2016
WO	2016073072	A1	5/2016
WO	2016081125		5/2016
WO	2016081128		5/2016
WO	2016081134		5/2016
WO	2016081136		5/2016
WO	2015090382		6/2016
WO	2016089491		6/2016
WO	2016089492	A1	6/2016
WO	2016096029	A1	6/2016
WO	WO 2016/125161		8/2016
WO	WO 2016/133509		8/2016
WO	2016145411		9/2016
WO	WO 2016/137982		9/2016
WO	2016171907		10/2016

OTHER PUBLICATIONS

"Product Abstract—Program on Technology Innovation: Study on the Integration of High Temperature Superconducting DC Cables Within the Eastern and West urn North American Power Grids."

(56) **References Cited**

OTHER PUBLICATIONS

EPRI—Electronic Power Research Institute, epri.com, Product ID:10203, Nov. 25, 2009.
"Boost: The world's first WI-FI extending led bulb," Sengled, sengled.com, http://www.sengled.com/sites/default/files/field/product/downloads/manual/a01-a60_na_user_manual.pdf, Dec. 2014.
"Examples of Cell Antennas," RF Check®, rfcheck.com, https://web.archive.org/web/20100201214318/http://www.rfcheck.com/Examplesof-Cell-Antennas.php, Feb. 1, 2010.
"Flashing Light : IR.LAMP," Beninca®, beninca.com, http://www.beninca.com/en/news/2015/02/23/lampeggiante-irlamp.html, Feb. 23, 2015.
"An Improved Solid Dielectric Lens Impulse Radiating Antenna," SBIR/STTR, DoD, sbir.gov., 2004.
"Power line communications: An overview Part I." King Fahd University of Petroleum and Minerals, Dhahran, KSA., 2008.
"Power Line Communications," Atmel®, atmel.com http://www.atmel.com/products/smartenergy/powerlinecommunications/default.aspx., 2015.
"Integrated Radio Masts Fully camouflaged Outdoor-Wi-Fi APs in GRP-lamp poles," Brown-iposs, brown-iposs.com., Mar. 21, 2014.
"How is ELine Different?," ELine Corridor Systems, corridor.biz http://www.corridor.biz/ELine_is_different.html., Apr. 23, 2015.
"Powerline Communication," Cypress Perform, cypress.com http://www.cypress.com/?id=2330., Apr. 23, 2015.
"Products: GSM Mircro Repeater." L-TEL: Quanzhou L-TEL Communication Equipment Co., Ltd., l-tel.com., Apr. 24, 2015.
"New Wi-Fi antenna enhances wireless coverage," ScienceDaily®, sciencedaily.com., Apr. 29, 2015.
"Dielectric Antenna," Microwave Technologies, Ind., microwavetechnologiesinc.co.in http://www.microwavetechnologiesinc.co.in/microwavecommunicationlabproducts. html#dielectricantenna,, May 21, 2015.
"Horn Antennas," Steatite QPar Antennas, steatiteqparantennas.co.uk, http://www.steatiteqparantennas.co.uk/products hornantennas.html? http://www.steatiteqparantennas.co.uk/consultancy/customhornantennas/., May 21, 2015.
"24 Volt D.C Flashing Light With Built-in Antenna 433Mhz, DEA+ Product Guide" Meteor electrical, meteorelectrical.com, Code: LUMY/24A., Jul. 28, 2010.
"Waveguide-fed Conical Horn," Antenna Magus, antennamagus.com, © 2015, accessed:, Aug. 2015.
"Identity Management," Tuomas Aura CSE-C3400 Information Security, Aalto University, 33 pgs., Autumn 2014.
"Power Communication," Communication Power Solutions, Inc., cpspower.biz, http://www.cpspower.biz/services/powercommunications/., Oct. 2013.
"A Dielectric Lens Antenna with Enhanced Aperture Efficiency for Industrial Radar Applications", Computer Simulation Technology, cst.com, May 10, 2011.
"A New Approach to Outdoor DAS Network Physical Layer Using E-Line Technology", Corridor Systems, Mar. 2011, 5 pages.
"About Firelight Media Group", http://www. insu ra ncetechnologies.com/Products/Prod ucts_firelight_overview .shtml, Firelight®. Insurance Technologies, LLC,, Apr. 19, 2015.
"Asahi Multi-Core Fiber Cable", Industrial Fiber optics, i-fiberoptics.com http://i-fiberoptics.com/m u lti-core-fi ber-ca ble. ph p, Apr. 26, 2015.
"Bi-Axial PA Horn with Gimbal Mount", Atlas Sound, MCM Electronics, mcmelectronics.com, MCM Part #555-13580., 2011.
"Broadband Negligible Loss Metamaterials", Computer Electmagnetics and Antennas Research Laboratory, cearl.ee.psu.edu., May 15, 2012.
"Cisco IP VSAT Satellite WAN Network Module for Cisco Integrated Services Routers", http://www.cisco.com/c/en/us/products/collateral/interfaces-modules/ip-vsatsatellite-wan-module/product_data_sheet0900aecd804bbf6f.html, Jul. 23, 2014.
"Cloud Management", Cisco Meraki, cisco.com., Sep. 11, 2015.
"Decryption: Identify & Control Encrypted Traffic", Palo Alto Networks, paloaltonetworks.com, Mar. 7, 2011.
"Denso", Winn & Coales (Denso) Ltd. UK, denso.net, http://www.denso.net/voidfiller/voidpump.htm, 2015, 1 page.
"Detecting and Preventing Mac Spoofing", Detecting and Preventing MAC Spoofing | Network Access Control Solutions, infoexpress, 2014.
"Electronic Business Fulfillment FireLight® ", Firelight Media Group LLC, firelightmedia.net http://www .firelightmedia .net/fmg/index.php/home, Apr. 19, 2015, 2 pages.
"Elliptical Polarization", "Elliptical Polarization" Wikipedia, <http://en.wikipedia.org/wiki/Elliptical_polarization>, 3 pgs., Apr. 21, 2015.
"Exacter Outage-Avoidance System", http://www.epri.com/abstracts/Pages/ProductAbstract.aspx?ProductId=000000000001020393, Nov. 30, 2009.
"GM-12 Gimbal Mount", Newmark System, Inc, newmarksystems.com., 2015.
"HiveManager Network Management System", Aerohive® Networks, aerohive.com., Sep. 2015.
"Home", Darktrace, darktrace.com, Jul. 10, 2014.
"How to Use STUF", STUF Page Link Info, crossdevices.com, http://www.crossdevices.com/cross_devices_010.htm, 2015, 1 page.
"IEEE Standard for Information technology—Local and metropolitan area networks—Specific requirements", Part 15.4: Wireless Medium Access Control (MAC) and Physical Layer (PHY) Specifications for Low Rate Wireless Personal Area Networks (WPANs), in IEEE Std 802.15.4, (Revision of IEEE Std 802.15.4-2003), Sep. 7, 2006, 1-320.
"Installing Satellite Accessories", ACE®, acehardware.com., May 8, 2006.
"Ipitek All-Optical Sensors", http://www.ipitek.com/solutions-by-industry/all-optical-sensors., Jun. 2, 2014.
"mmWave Axial Choke Horn Antenna with Lens", Feko, Sep. 24, 2013.
"Network technology", nbnTM, nbnco.com.au, Jun. 27, 2014.
"Norse Appliance™: Block attacks before they target your network, and dramatically improve the ROI on your entire security infrastructure", norsecorp.com, 2015.
"Out-of-Band Mgmt", Cradle Point, cradlepoint.com., Sep. 2015.
"Out-of-Band Security Solution", Gigamon®, gigamon.com., Aug. 3, 2014.
"Powerline—Juice Up Your Network With Powerline", Netgear®, netgear.com http://www.netgear.com/home/products/networking/powerline/, Apr. 21, 2015, 3 pages.
"Pro 600 Sirius XM Radio Amplified Outdoor Antenna", Pixel Technologies, Oct. 3, 2014.
"Product Overview: Introducing SilentDefense", Security Matters, secmatters.com, Nov. 9, 2013.
"Quickly identify malicious traffics: Detect", Lancope®, lancope.com, Mar. 15, 2015.
"radar at st Andrews", mmwaves.epr, st-andrews.ac.uk., Feb. 4, 2011.
"Resilience to Smart Meter Disconnect Attacks", ADSC Illinois at Singapore PTE, LTD., publish.illinois.edu http://publish.illinois.edu/integrativesecurityassessment/resiliencetosmartmeterdisconnectattacks/, 2015.
"RF Sensor Node Development Platform for 6LoWPAN and 2.4 GHz Applications", http://www.ti.com/tool/TIDM-RF-SENSORNODE., Jun. 2, 2014.
"Smart Out-Of-Band Management", Open Gear, opengear.com., Sep. 2015.
"Tapered waveguide", Lumerical Solutions, Inc., docs.lumerical.com., 2010.
"Tapered Waveguides Improve Fiber Light Coupling Efficiency", Tech Briefs, techbriefs.com, Molex Inc., Downers Grove, Illinois and KiloLambda Technologies Ltd., Tel Aviv, Israel., Jan. 1, 2006.
"Wireless powerline sensor", wikipedia.org, http://en.wikipedia.org/wiki/Wireless_powerline_sensor, 2014, 3 pages.
Akiba, Shigeyuki et al., "Photonic Architecture for Beam Forming of RF Phased Array Antenna", Optical Fiber Communication Conference. Optical Society of America., Abstract Only, 2014.

(56) **References Cited**

OTHER PUBLICATIONS

Alam, M N et al., "Novel surface wave exciters for power line fault detection and communications", Antennas and Propagation (APSURSI), IEEE International Symposium on, IEEE, pp. 1139-1142, Jul. 3, 2011.
Alam, MD N. et al., "Design and Application of Surface Wave Sensors for nonintrusive Power Line Fault Detection," IEEE Sensors Journal, IEEE Service Center, New York, NY, US, vol. 13, No. 1, pp. 339-347, Jan. 1, 2013.
Ali, Muhammad Q. et al., "Randomizing AMI configuration for proactive defense in smart grid", Smart Grid Communications (SmartGridComm), IEEE International Conference on. IEEE, Abstract Only, http://ieeexplore.ieee.org/xpl/login.jsp?tp=&arnumber=6688027, 2013.
Angove, Alex , "Direct Bury Duct Assemblies, MPB 302 3+ —Ribbonet Microducts", Ericsson, archive.ericsson.net, Jul. 30, 2014.
Angove, Alex , "How the NBN Differs from ADSL2+, Cable and Wireless", Whistle Out, whistleout.com.au, Jul. 30, 2014.
Arage, Alebel et al., "Measurement of wet antenna effects on millimetre wave propagation", Radar, IEEE Conference on IEEE., Abstract Only, 2006,.
Arthur, Joseph Kweku , "Improving QoS in UMTS Network in ACCRA Business District Using Tower-Less Towers", IPASJ International Journal of Electrical Engineering (IIJEE), vol. 2, Issue 11., Nov. 2014.
Asadallahi, Sina et al., "Performance comparison of CSMA/CA Advanced Infrared (alr) and a new pointtomultipoint optical MAC protocol." Wireless Communications and Mobile Computing Conference (IWCMC), 2012 8th International. IEEE., Abstract Only, 2012.
Atwater, Harry A. , "The promise of plasmonics." Scientific American 296.4: 56-62., 2007.
Bach, Christian , "Current Sensor—Power Line Monitoring for Energy Demand Control", Application Note 308, http://www.enocean.com/fileadmin/redaktion/pdf/app_notes/AN308_CURRENT_SENSOR_Jan09.pdf, Jan. 2009, 4 pages.
Barron, Ashleigh L. , "Integrated Multicore Fibre Devices for Optical Trapping", Diss. Heriot-Watt University, 2014, 11-15.
Beal, J.C. et al., "Coaxial-slot surface-wave launcher", Electronics Letters 4.25: 557559, Abstract Only, 1968.
Bhushan, Naga , "Network densification: the dominant theme for wireless evolution into 5G", Communications Magazine, IEEE 52.2: 82-89, 2014.
Bing, Benny , "Ubiquitous Broadband Access Networks with Peer-to-Peer Application Support", Evolving the Access Network: 27-36, 2006.
Bock, James et al., "Optical coupling." Journal of Physics: Conference Series. vol. 155. No. 1. IOP Publishing., 2009.
Bowen, Leland H. et al., "A Solid Dielectric Lens Impulse Radiating Antenna with High Dielectric Constant Surrounded by a Cylindrical Shroud," Sensor and Simulation Note 498., Introduction, Apr. 2005, 3 pages.
Bridges, Greg E. et al., "Plane wave coupling to multiple conductor transmission lines above a lossy earth", Compatibility, IEEE Transactions on 31.1, Abstract Only, 1989, 21-33.
Brooke, Gary H. , Properties of surface waveguides with discontinuities and perturbations in cross-section. Diss. University of British Columbia, 1977., 1977.
Brown, J. et al., "The launching of radial cylindrical surface waves by a circumferential slot", Proceedings of the IEE Part B: Radio and Electronic Engineering 106.26: 123128., Abstract Only, 1959.
Bruno, Joseph , "Interference Reduction in Wireless Networks", Computing Research Topics, Computing Sciences Department, Villanova University, Nov. 14, 2007, 8 pages.
Burkhart, Martin et al., "Does Topology Control Reduce Interference?", Department of Computer Science, ETH Zurich, Proceedings of the 5th ACM international symposium on Mobile ad hoc networking and computing, ACM, 2004, 11 pages.
Callis, et al., "An In-Line Power Monitor for HE11 Low Loss Transmission Lines", Proceedings of the 29th International Conference on Infrared and Millimeter Waves (IRMMW), Karlsruhe, Germany, 2004.
Carroll, John M. et al., "Developing the Blacksburg electronic village", Communications of the ACM 39.12: 69-74, 1996.
Chen, Dong et al., "A trust management model based on fuzzy reputation for internet of things", Computer Science and Information Systems 8.4: 12071228, Abstract Only, 2011.
Chen, Yingying , "Detecting and Localizing Wireless Spoofing Attacks", Sensor, Mesh and Ad Hoc Communications and Networks, SECON'07. 4th Annual IEEE Communications Society Conference on IEEE, 2007, 10 pages.
Chiba, Jiro , "Experimental Studies of the Losses and Radiations Due to Bends in the Goubau Line", IEEE Transactions on Microwave Theory and Techniques, Feb. 1977, 94-100.
Chiba, Jiro , "On the Equivalent Circuit for the G-Line Above Ground", International Wroclaw Symposium on Electromagnetic Compatibility, 1998, 78-82.
Cimini, Carlos Alberto et al., "Temperature profile of progressive damaged overhead electrical conductors", Journal of Electrical Power & Energy Systems 49: 280-286., 2013.
Costantine, Joseph et al., "The analysis of a reconfigurable antenna with a rotating feed using graph models", Antennas and Wireless Propagation Letters 8: 943-946, 2009.
Covington, Michael J. et al., "Threat implications of the internet of things", Cyber Conflict (CyCon), 2013 5th International Conference on. IEEE., Abstract Only, 2013.
Crane, Robert K. , "Analysis of the effects of water on the ACTS propagation terminal antenna", Antennas and Propagation, IEEE Transactions on 50.7: 954965, Abstract Only, 2002.
De Sabata, Aldo et al., "Universitatea Politehnica", din Timi ş oara Facultatea de Electronică ş i Telecomunica ţ ii., 2012.
Dini, Gianluca et al., "MADAM: A Multilevel Anomaly Detector for Android Malware", MMMACNS. vol. 12, 2012.
Doane, J.L. et al., "Oversized rectangular waveguides with modefree bends and twists for broadband applications", Microwave Journal 32(3), Abstract Only, 1989, 153-160.
Doelitzscher, et al., "ViteraaS: Virtual cluster as a service." Cloud Computing Technology and Science (CloudCom), 2011 IEEE Third International Conference on. IEEE., 2011.
Dooley, Kevin , "Out-of-Band Management", auvik, auvik.com., Apr. 12, 2014.
Dostert, Klaus , "Frequency-hopping spread-spectrum modulation for digital communications over electrical power lines." Selected Areas in Communications, IEEE Journal on 8.4: 700-710., Abstract Only, 1990.
Dragoo, R.E. et al., "Fiber Optic Data Bus for the An/GYQ21(V)." Harris Corp, U.S. Communications Syst. Div. Chart, Microcopy Resolution Test, 1980.
Dutton, Harry Jr. , "Understanding Optical Communications", International Technical Support Organization, SG24-5230-00., Sep. 1998.
Ehyaie, Danial , "Novel Approaches to the Design of Phased Array Antennas," Diss. The University of Michigan., 2011.
Elmore, Glenn , "Introduction to the Propagating Wave on a Single Conductor", www.corridor.biz, Jul. 27, 2009, 30 pages.
Erickson, Katherine , "Conductive cylindrical surface waveguides." https://www.ideals.illinois.edu/bitstream/handle/2142/30914/Erickson-Katherine.pdf?sequence=1, 2012.
Eskelinen, Harri , "DFM (A)-aspects for a horn antenna design," Lappeenranta University of Technology., 2004.
Eskelinen, P. , "A low-cost microwave rotary joint," International Radar Conference, 13-17, p. 1-4., Abstract Only, Oct. 2014, 1 page.
Feng, Taiming et al., "Design of a survivable hybrid wireless-optical broadband-access network", Journal of Optical Communications and Networking 3.5, 2011, 458-464.
Fenye, Bao et al., "Dynamic trust management for internet of things applications", Proceedings of the 2012 international workshop on Selfaware internet of things. ACM, Abstract Only, 2012, 1 page.
Freyer, Dan , "Combating the Challenges of Ka-Band Signal Degradation", SatMagazine, satmagzine.com., Sep. 2014.

(56) **References Cited**

OTHER PUBLICATIONS

Friedman, M et al., "Low-loss RF transport over long distances," IEEE Transactions on Microwave Theory and Techniques, Jan. 1, 2001, pp. 341-348.
Friedman, M. et al., "Low-Loss RF Transport Over Long Distances", IEEE Transactions on Microwave Theory an Techniques, vol. 49, No. 2, Feb. 2001, 341-348.
Fromm, W. et al., "A new microwave rotary joint," 1958 IRE International Convention Record, 21-25, 6:78-82., Abstract Only, Mar. 1966, 2 pages.
Garcia-Etxarri, Aitzol et al., "A combination of concave/convex surfaces for fieldenhancement optimization: the indented nanocone", Optics express 20.23, 2012, 2520125212.
Ghazisaidi, Navid et al., "Survivability analysis of next-generation passive optical networks and fiber-wireless access networks", Reliability, IEEE Transactions on 60.2, 2011, 479-492.
Goldsmith, P.F. , "Quasi-optical techniques", Proceedings of the IEEE., vol . 80, No. 11, Nov. 1, 1992.
Golrezaei, Negin et al., "FemtoCaching: Wireless Video Content Delivery through Distributed Caching Helpers", INFOCOM, Proceedings IEEE, 2012.
Gomes, Nathan J. et al., "Radio-over-fiber transport for the support of wireless broadband services", Journal of Optical Networking 8.2: 156-178., 2009.
Gonthier, François et al., "Mode coupling in nonuniform fibers:comparison between coupled-mode theory and finite-difference beam-propagation method simulations", JOSA B 8.2: 416421, Abstract Only, 1991, 3 pages.
Gritzalis, Dimitris et al., "The Sphinx enigma in critical VoIP infrastructures: Human or botnet?." Information, Intelligence, Systems and Applications (IISA), 2013 Fourth International Conference, IEEE., 2013.
Han, Chong et al., "Crosslayer communication module for the Internet of Things", Computer Networks 57.3: 622633, Abstract Only, 2013, 1 page.
Haroun, Ibrahim et al., "WLANs meet fiber optics—Evaluating 802.11 a WLANs over fiber optics links", RF Des. Mag: 36-39., 2003.
Hassan, Karim , "Fabrication and characterization of thermo-plasmonic routers for telecom applications", Diss. Univ. de Bourgogne., 2014.
Hassan, Maaly A. , "Interference reduction in mobile ad hoc and sensor networks", Journal of Engineering and Computer Innovations vol. 2(7), Sep. 2011, 138-154.
Hassani, Alireza et al., "Porous polymer fibers for low-loss Terahertz guiding." Optics express 16.9: 6340-6351., 2008.
Hautakorpi, Jani et al., "Requirements from Session Initiation Protocol (SIP) Session Border Control (SBC) Deployments." RFC5853, IETF (2010)., 2010.
Hawrylyshen, A. et al., "SIPPING Working Group J. Hautakorpi, Ed. Internet-Draft G. Camarillo Intended status: Informational Ericsson Expires: Dec. 18, 2008 R. Penfield Acme Packet.", 2008.
Hoss, R.J. et al., "Manufacturing Methods and Technology Program for Ruggedized Tactical Fiber Optic Cable", No. ITT-80-03-078. ITT Electrooptical Products Div Roanoke VA., 1980.
Ippolito, Louis J. , "Propagation effects handbook for satellite systems design. A summary of propagation impairments on 10 to 100 GHz satellite links with techniques for system design", 1989, Abstract Only, 1989, 1 page.
Izumiyama, Hidetaka et al., "Multicast over satellite", Applications and the Internet, (SAINT 2002). Proceedings. Symposium on. IEEE, 2002.
Jackson, Mark , "Timico CTO Hit by Slow FTTC Broadband Speeds After Copper Corrosion", ISP review, ispreview.co.uk, Mar. 5, 2013.
Jaeger, Raymond et al., "Radiation Performance of Germanium Phosphosilicate Optical Fibers." RADC-TR-81-69: Final Technical Report, Galileo Electro-Optical Corp., May 1981.
James, J.R. et al., "Investigations and Comparisons of New Types of Millimetre-Wave Planar Arrays Using Microstrip and Dielectric Structures", Royal Military Coll of Science Shrivenham (England)., 1985.
Jang, Hung-Chin , "Applications of Geometric Algorithms to Reduce Interference in Wireless Mesh Network", Journal on Applications of Graph Theory in Wireless Ad hoc Networks and Sensor Networks (JGRAPH-HOC) vol. 2, No. 1, Abstract Only, Mar. 2010, 1 page.
Jawhar, Imad et al., "A hierarchical and topological classification of linear sensor networks", Wireless Telecommunications Symposium, WTS, IEEE, http://faculty.uaeu.ac.ae/Nader_M/papers/WTS2009.pdf, 2009, 8 pages.
Jee, George et al., "Demonstration of the Technical Viability of PLC Systems on Medium- and Low-Voltage Lines in the United States", Broadband is Power: Internet Access via Power Line Networks, IEEE Communication Magazine, May 2003, 5 pages.
Jeong, et al., "Study of elliptical polarization requirement of KSTAR 84-GHz ECH system", Journal-Korean Physical Society 49, 2006.
Jin, , "Quasi-optical mode converter for a coaxial cavity gyrotron", Forschungszentrum, 2007.
Jin, Yu et al., "Nevermind, the Problem Is Already Fixed: Proactively Detecting and Troubleshooting Customer DSL Problems", ACM CoNEXT, Philadelphia, USA, Nov.-Dec. 2010, 12 pages.
Kamilaris, et al., "Exploring the Use of DNS as a Search Engine for the Web of Things." Internet of Things (WF-IoT), 2014 IEEE World Forum on. IEEE, 2014.
Kang, , "Chapter 6: Array Antennas," IHS Engineering360, globalspec.com, http://www.globalspec.com/reference/75109/203279/chapter-6-array-antennas., Apr. 22, 2015.
Katkovnik, Vladimir et al., "High-resolution signal processing for a switch antenna array FMCW radar with a single channel receiver", Sensor Array and Multichannel Signal Processing Workshop Proceedings, IEEE., 2002.
Khan, , "Dual polarized dielectric resonator antennas", Chalmers University of Technology, 2010.
Kikuchi, H. et al., "Hybrid transmission mode of Goubau lines". ,J.Inst.Electr.Comm.Engrs., Japan,vol. 43, pp. 39-45., 1960.
Kirkham, H. et al., "Power system applications of fiber optics (Jet Propulsion Lab." JPL Publication 84-28, Electric Energy Systems Division, U.S. DoE, p. 180., 1984.
Koshiba, Masanori et al., "Analytical expression of average power-coupling coefficients for estimating intercore crosstalk in multicore fibers", Photonics Journal, IEEE 4.5, 2012, 1987-1995.
Kroon, Barnard et al., "Steady state RF fingerprinting for identity verification: one class classifier versus customized ensemble." Artificial Intelligence and Cognitive Science. Springer Berlin Heidelberg, 198206., Abstract Only, 2010, 3 pages.
Kroyer, Thomas , "A Waveguide High Order Mode Reflectometer for the Large Hadron Collider Beam-pipe", Diss. TU Wien., 2003.
Kuhn, Marc et al., "Power Line Enhanced Cooperative Wireless Communications", IEEE Journal on Selected Areas in Communications, vol. 24, No. 7, Jul. 2006, 10 pages.
Kumar, Sailesh , "Survey of Current Network Intrusion Detection Techniques", Washington Univ. in St. Louis, Dec. 2007.
Lappgroupusa, "Selection of Number of Cable Cores With Emphasis on Sizing Parameters", Industrial Cable & Connector Technology News, lappconnect.blogspot.com, http://lappconnect.blogspot.com/2014_10_01_archive.html, Oct. 30, 2014.
Leech, Jamie et al., "Experimental investigation of a low-cost, high performance focal-plane horn array." Terahertz Science and Technology, IEEE Transactions on 2.1: 61-70., 2012.
Li, Xiang-Yang et al., "Interference-Aware Topology Control for Wireless Sensor Networks", SECON. vol. 5, 2005.
Li, Xiaowei et al., "Integrated plasmonic semi-circular launcher for dielectric-loaded surface plasmonpolariton waveguide", Optics express 19.7: 65416548, 2011.
Li, Xu et al., "Smart community: an internet of things application", Communications Magazine, IEEE 49.11: 68-75, 2011.
Lier, E. et al., "Simple hybrid mode horn feed loaded with a dielectric cone," Electronics Letters 21.13: 563564., 1985.

(56) **References Cited**

OTHER PUBLICATIONS

Lim, Christina et al., "Fiber-wireless networks and subsystem technologies", Lightwave Technology, Journal of 28.4, 390-405, 2010.
Lou, Tiancheng , "Minimizing Average Interference through Topology Control", Algorithms for Sensor Systems, Springer Berlin Heidelberg, 2012, 115-129.
Lucyszyn, S. et al., "Novel RF MEMS Switches", Microwave Conference, APMC, Asia-Pacific. IEEE, 2007.
Lucyszyn, Stepan et al., "RF MEMS for antenna applications", Antennas and Propagation (EuCAP), 7th European Conference on. IEEE,, 2013.
Luo, QI et al., "Circularly polarized antennas", John Wiley & Sons, Book—description only, 2013, 1 page.
Mahato, Suvranshu Sekhar , Studies on an Infrared Sensor Based Wireless Mesh Network. Diss., Abstract Only, 2010, 2 pages.
Maier, Martin et al., "The audacity of fiberwireless (FiWi) networks", AccessNets. Springer Berlin Heidelberg, 16-35., 2009.
Marcatili, E.A. et al., "Hollow Metallic and Dielectric Waveguides for Long Distance Optical Transmission and Lasers", Bell System Technical Journal 43(4), Abstract Only, 2 pages, 1964, 1783-1809.
McAllister, M.W. et al., "Resonant hemispherical dielectric antenna," Electronics Letters 20.16: 657659., Abstract Only, 1984, 1 page.
Meng, H. et al., "A transmission line model for high-frequency power line communication channel", Power System Technology, PowerCon 2002. International Conference on. vol. 2. IEEE, 2002. http:/ /infocom. uniroma 1.it/ ""enzobac/MengChen02. pdf, 2002.
Menon, S.S. et al., "Propagation characteristics of guided modes in a solid dielectric pyramidal horn," Proceedings of the 2012 International Conference on Communication Systems and Network Technologies. IEEE Computer Society, 2012., Abstract Only, 2012, 2 pages.
Mitchell, John E. , "Integrated Wireless Backhaul Over Optical Access Networks", Journal of Lightwave Technology 32.20, 2014, 3373-3382.
Miyagi, M. , "Bending losses in hollow and dielectric tube leaky waveguides", Applied Optics 20(7), Abstract Only, 2 pages, 1981, 1221-1229.
Moaveni-Nejad, Kousha et al., "Low-Interference Topology Control for Wireless Ad Hoc Networks", Department of Computer Science, Illinois Institute of Technology, Ad Hoc & Sensor Wireless Networks 1.1-2, 2005, 41-64.
Moisan, M. et al., "Plasma sources based on the propagation of electromagnetic surface waves", Journal of Physics D: Applied Physics 24.7: 1025, 1991.
Mokhtarian, Kianoosh et al., "Caching in Video CDNs: Building Strong Lines of Defense", EuroSys, Amsterdam, Netherlands, 2014.
Morse, T.F. , "Research Support for the Laboratory for Lightwave Technology." Brown Univ Providence RI Div of Engineering, 1992., 1992.
Mruk, Joseph Rene , "Wideband monolithically integrated frontend subsystems and components", Diss. University of Colorado, 2011.
Nachiketh, P. et al., "Optimizing public-key encryption for wireless clients", Proceedings of the IEEE International Conference on Communications (ICC 2002). No. 1., 2002.
Narayanan, Arvind , "Fingerprinting of RFID Tags and HighTech Stalking." 33 Bits of Entropy, 33bits.org, Oct. 4, 2011.
Nassa, Vinay Kumar , "Wireless Communications: Past, Present and Future", Dronacharya Research Journal: 50. vol. III, Issue-II, Jul.-Dec. 2011, 2011.
Nibarger, John P. , "An 84 pixel all-silicon corrugated feedhorn for CMB measurements." Journal of Low Temperature Physics 167.3-4 (2012): 522-527., 2012.
Nicholson, Basil J. , "Microwave Rotary Joints for X-, C-, and S-band", Battelle Memorial Inst Columbus OH, 1965.
Nuvotronics, "PolyStrata—Phased Arrays & Antennas", Nuvotronics, nuvotronics.com http://www.nuvotronics.com/antennas.php, Apr. 26, 2015.
Olver, A. D. , "Microwave horns and feeds," vol. 39. IET, Book—description only, 1994, 1 page.
Olver, A.D. et al., "Dielectric cone loaded horn antennas," Microwaves, Antennas and Propagation, IEE Proceedings H. vol. 135. No. 3. IET., Abstract Only, 1988, 1 page.
Orfanidis, Sophocles J. , "Electromagnetic waves and antennas," Rutgers University., 2002.
Pahlavan, Kaveh et al., "Wireless data communications", Proceedings of the IEEE 82.9: 1398-1430, 1994.
Patel, Shwetak N. et al., "The Design and Evaluation of an End-User-Deployable, Whole House, Contactless Power Consumption Sensor", CHI 2010: Domestic Life, Apr. 2010, 10 pages.
Paul, Sanjoy et al., "The Cache-and-Forward Network Architecture for Efficient Mobile Content Delivery Services in the Future Internet", Innovations in NGN: Future Network and Services, 2008. K-INGN 2008. First ITU-T Kaleidoscope Academic Conference, 2008.
Perkons, Alfred R. et al., "TM surface-wave power combining by a planar active-lens amplifier", Microwave Theory and Techniques, IEEE Transactions on 46.6: 775783, 1998.
Péter, Zsolt et al., "Assessment of the current intensity for preventing ice accretion on overhead conductors", Power Delivery, IEEE Transactions on 22.1: 565-574., 2007.
Petrovsky, Oleg , "The Internet of Things: A Security Overview", w.druva.com, Mar. 31, 2015.
Pham, Tien-Thang et al., "A WDM-PON-compatible system for simultaneous distribution of gigabit baseband and wireless ultrawideband services with flexible bandwidth allocation", Photonics Journal, IEEE 3.1, 2011, 13-19.
Piksa, Petr et al., "Elliptic and hyperbolic dielectric lens antennas in mmwaves", Radioengineering 20.1, 2011, 271.
Plagemann, Thomas et al., "Infrastructures for community networks", Content Delivery Networks. Springer Berlin Heidelberg, 367-388, 2008.
Pohl, , "A dielectric lens-based antenna concept for high-precision industrial radar measurements at 24GHz," Radar Conference (EuRAD), 2012 9th European, IEEE., 2012.
Pranonsatit, S. et al., "Sectorised horn antenna array using an RF MEMS rotary switch", Asia-Pacific Microwave Conf., APMC., 2010.
Pranonsatit, Suneat et al., "Single-pole eight-throw RF MEMS rotary switch", Microelectromechanical Systems, Journal of 15.6: 1735-1744, 2006.
Prashant, R.R. et al., "Detecting and Identifying the Location of Multiple Spoofing Adversaries in Wireless Network", International Journal of Computer Science and Mobile Applications, vol. 2 Issue. 5, May 2014, 1-6.
Rahim, S. K. A. et al., "Measurement of wet antenna losses on 26 GHz terrestrial microwave link in Malaysia", Wireless Personal Communications 64.2: 225231, 2012.
Rambabu, K. et al., "Compact single-channel rotary joint using ridged waveguide sections for phase adjustment," IEEE Transactions on Microwave Theory and Techniques (Aug. 2003) 51(8):1982-1986., Abstract Only, Aug. 2003, 2 pages.
Rappaport, Theodore S. et al., "Mobile's Millimeter-Wave Makeover", Spectrum.IEEE.Org, Sep. 2014.
Raychaudhuri, Dipankar et al., "Emerging Wireless Technologies and the Future Mobile Internet", Cambridge University Press, Abstract Only, Mar. 2011, 1 page.
Raychem, "Wire and Cable", Dimensions 2:1., 1996.
Reynet, Olivier et al., "Effect of the magnetic properties of the inclusions on the high-frequency dielectric response of diluted composites." Physical Review B66.9: 094412., 2002.
Rouse, Margaret , "Transport Layer Security (TLS)", TechTarget, searchsecurity.techtarget.com, Jul. 2006.
Roze, Mathieu et al., "Suspended core subwavelength fibers: towards practical designs for low-loss terahertz guidance." Optics express 19.10 (2011): 9127-9138., 2011.
Sagar, Nishant , "Powerline Communications Systems: Overview and Analysis", Thesis, May 2011, 80 pages.

(56) **References Cited**

OTHER PUBLICATIONS

Sagues, Mikel et al., "Multi-tap complex-coefficient incoherent microwave photonic filters based on optical single-sideband modulation and narrow band optical filtering." Optics express 16.1: 295-303., 2008.
Saied, Yosra Ben et al., "Trust management system design for the internet of things: a contextaware and multiservice approach", Computers & Security 39: 351365, Abstract Only, 2013, 2 pages.
Salema, Carlos et al., "Solid dielectric horn antennas," Artech House Publishers, 1998.
Salema, Carlos et al., "Solid dielectric horn antennas," Artech House Publishers, 1998, Amazon., Book—description only, 1998.
Sarafi, A. et al., "Hybrid wireless-broadband over power lines: A promising broadband solution in rural areas." Communications Magazine, IEEE 47.11 (2009): 140-147., 2009.
Sarafi, Angeliki M. et al., "Hybrid Wireless-Broadband over Power Lines: A Promising Broadband Solution in Rural Areas", IEEE Communications Magazine, Nov. 2009, 8 pages.
Sarnecki, Joseph et al., "Microcell design principles", Communications Magazine, IEEE 31.4: 76-82, 1993.
Saruhan, Ibrahim Halil , "Detecting and Preventing Rogue Devices on the Network", SANS Institute InfoSec Reading Room, sans.org, Aug. 8, 2007, 1 page.
Scarfone, Karen et al., "Technical Guide to Information Security Testing and Assessment", National Institute of Standards and Technology, csrc.nist.gov, Special Publication, Sep. 2008, 800-115.
Shafai, Lotfollah , "Dielectric Loaded Antennas", John Wiley & Sons, Inc., http://www.researchgate.net/publication/227998803_Dielectric_Loaded_Antennas, Apr. 15, 2005.
Shafi, Mansoor et al., "Advances in Propagation Modeling for Wireless Systems", EURASIP Journal on Wireless Communications and Networking. Hindawi Publishing Corp, 2009, p. 5.
Shimabukuko, F.I. et al., "Attenuation measurement of very low-loss dielectric waveguides by the cavity resonator method in the millimeter/submillimeter wavelength range." No. TR-0086A (2925-06)-1. Aerospace Corp El Segundo CA Electronics Research Lab, 1989., 1989.
Shindo, Shuichi et al., "Attenuation measurement of cylindrical dielectric-rod waveguide." Electronics Letters 12.5, 117-118., 1976.
Shumate, Paul W. et al., "Evolution of fiber in the residential loop plant." IEEE Communications Magazine 29.3: 68-74., 1991.
Sievenpiper, D.F. et al., "Two-dimensional beam steering using an electrically tunable impedance surface," in Antennas and Propagation, IEEE Transactions on , vol. 51, No. 10, pp. 2713-2722., Oct. 2003.
Sommerfeld, A. , "On the propagation of electrodynamic waves along a wire", Annals of Physics and Chemistry New Edition, vol. 67, No. 2, 1899, 72 pages.
Strahler, Olivier , "Network Based VPNs", SANS Institute InfoSec Reading Room, sans.org., Aug. 2002.
Strieby, M.E. et al., "Television transmission over wire lines." American Institute of Electrical Engineers, Transactions of the 60.12: 1090-1096., Abstract Only, 1941, 2 pages.
Szabó, Csaba A. , "European Broadband Initiatives with Public Participation", Broadband Services: 255, 2005.
Taboada, John M. et al., "Thermo-optically tuned cascaded polymer waveguide taps." Applied physics letters 75.2: 163-165., 1999.
Templeton, Steven J. et al., "Detecting Spoofed Packets", DARPA Information Survivability Conference and Exposition, vol. 1, IEEE, 2003.
Theoleyr, Fabrice , "Internet of Things and M2M Communications", books.google.com, ISBN13: 9788792982483, Book—description only, Apr. 17, 2013, 1 page.
Thornton, John et al., "Modern lens antennas for communications engineering", vol. 39, 2013.
Valladares, Cindy , "20 Critical Security Controls: Control 7—Wireless Device Control", Tripwire—The State of Security, tripwire.com, Mar. 21, 2013.
Vogelgesang, Ralf et al., "Plasmonic nanostructures in aperture-less scanning near-field optical microscopy (aSNOM)", physica status solidi (b) 245.10: 22552260, 2008.
Volat, C. et al., "De-icing/anti-icing techniques for power lines: current methods and future direction", Proceedings of the 11th International Workshop on Atmospheric Icing of Structures, Montreal, Canada., 2005.
Wagter, Herman , "Fiber-to-the-X: the economics of last-mile fiber", ARS Technica, arstechnica.com,, Mar. 31, 2010.
Wake, David et al., "Radio over fiber link design for next generation wireless systems", Lightwave Technology, Journal of28.16: 2456-2464., 2010.
Wang, Jing et al., "The influence of optical fiber bundle parameters on the transmission of laser speckle patterns", Optics express 22.8, 2014, 8908-8918.
Wilkins, George A. , "Fiber Optic Telemetry in Ocean Cable Systems", Chapter in new edition of Handbook of Oceanographic Winch, Wire and Cable Technology, Alan H. Driscoll, Ed.,(to be published by University of Rhode Island)., 1986.
Wolff, Christian , "Phased Array Antenna" Radar Tutorial, web.archive.org, radartutorial.eu, Oct. 21, 2014.
Wu, Xidong et al., "Design and characterization of singleand multiplebeam mmwave circularly polarized substrate lens antennas for wireless communications", Microwave Theory and Techniques, IEEE Transactions on 49.3, 2001, 431-441.
Xi, Liu Xiao , "Security services in SoftLayer", Sep. 21, 2015.
Xia, Cen et al., "Supermodes for optical transmission", Optics express 19.17, 2011, 16653-16664.
Yang, , "Power Line Sensor Networks for Enhancing Power Line Reliability and Utilization", Georgia Institute of Technology, https://smartech.gatech.edu/bitstream/handle/1853/41087/Yang_Yi_201108_phd.pdf, Apr. 26, 2011, 264 pages.
Yang, et al., "Power line sensornet—a new concept for power grid monitoring", IEEE Power Engineering Society General Meeting, Abstract Only, 2006, pp. 8.
Yeh, C. et al., "Ceramic Waveguides." Interplanetary Network Progress Report141.26: 1., 2000.
Yu, Shui et al., "Predicted packet padding for anonymous web browsing against traffic analysis attacks", Information Forensics and Security, IEEE Transactions on 7.4, http://nsp.org.au/syu/papers/tifs12.pdf, 2012, 1381-1393.
Zelby, Leon W. , "Propagation Modes on a Dielectric Coated Wire", J. The Franklin Institute, vol. 274(2), pp. 85-97, 1962.
Zhao, et al., "Energy harvesting for a wireless-monitoring system of overhead high-voltage power lines", IET Generation, Transmission & Distribution 7, IEEE Xplore Abstract, 2013, 2 pages.
Zheng, Zhu et al., "Efficient coupling of propagating broadband terahertz radial beams to metal wires", Optics express 21.9: 1064210650, 2013.
Zucker, , "Surface-wave antennas", Antenna engineering handbook 4, 2007.
International Search Report and Written Opinion in PCT/US2016/028417, mailed Jul. 5, 2016, 13 pages.
International Search Report PCT/US2016/036292 mailed Sep. 13, 2016.
PCT/US16/027397 International Search Report & Written Opinion mailed Jun. 24, 2016.
PCT/US16/027398 International Search Report and Written Opinion mailed Jun. 24, 2016.
PCT/US16/027403 International Search Report & Written Opinion mailed Jun. 22, 2016.
PCT/US16/028395 International Search Report and Written Opinion mailed Jun. 29, 2016.
PCT/US16/032441 International Search Report and Written Opinion mailed Jul. 29, 2016.
PCT/US16/036284 International Search Report & Written Opinion mailed Sep. 8, 2016.
PCT/US16/036388 International Search Report and Written Opinion mailed Aug. 30, 2016.
PCT/US2016/036285 International Search Report and Written Opinion mailed Aug. 23, 2016.
PCT/US2016/036288 International Search Report & Written Opinion mailed Sep. 1, 2016.

(56) **References Cited**

OTHER PUBLICATIONS

PCT/US2016/036290 International Search Report & Written Opinion mailed Aug. 11, 2016.
PCT/US2016/036293 International Search Report & Written Opinion mailed Sep. 15, 2016.
"Alternative Local Loop Technologies: A Review", Organisation for Economic Co-Operation and Development, Paris, OCDE/GD(96)181, https://www.oecd.org/sti/2090965.pdf, 1996.
"Beam Adaptive Algorithms for Smart Antennas Computer Science Essay", UKESSAYS, ukessays.com, Mar. 23, 2015.
"Broadband Over Power Lines (BPL): Developments and Policy Issues", Organisation for Economic Co-operation and Development, Directorate for Science, Technology and Industry, Committee for Information, Computer and Communications Policy, Jun. 2, 2009, 35 pages.
"Broadband: Bringing Home the Bits: Chapter 4 Technology Options and.Economic Factors", The National Academies Press, nap.edu, 2002.
"Cisco Aironet 1500 Series Access Point Large Pole Mounting Kit Instructions", http://www.cisco.com/c/en/us/td/docs/wireless/antenna/installation/guide/18098.html, 2008.
"Delivering broadband over existing wiring", Cabling Installation & Maintenance, cablinginstall.com, May 1, 2002.
"Doubly-fed Cage-cone Combined Broadband Antennas for Marine Applications", http://www.edatop.com/down/paper/antenna/%E5%A4%A9%E7%BA%BF%E8%AE%BE%E8%AE%A1-890w5nebp5ilpq.pdf, 2007.
"Dual Antenna Boom Assembly", http://web.archive.org/web/20090126192215/http://atechfabrication.com/products/dual_antenna_boom.htm, 2009.
"Energy-Harvesting Power Supply", http://sdpm.arizona.edu/projects/project-publi/upid/38a8cf3b42f35576de25de1f6dcc20f3, Discloses a project to harvest energy from a power line and that a device was built that clamps onto a power line., 2016.
"Fast Numerical Modeling of a Conical Horns Lens Antenna", Comsol, comsol.com, Application ID: 18695, Sep. 16, 2016.
"Harvest energy from powerline", https://www.physicsforums.com/threads/harvest-energy-from-powerline.685148/, Discussion thread about harvesting power from powerlines that includes the suggestion of clamping a device to the power line., 2013.
"International Preliminary Report on Patentability", PCT/US2014/039746, Dec. 10, 2015.
"International Preliminary Report on Patentability", PCT/US2014/060841, May 19, 2016, 8 pages.
"International Preliminary Report on Patentability & Written Opinion", PCT/US2014/061445, Jun. 23, 2016, 9 pages.
"International Search Report & Written Opinion", PCT/US2015/034827, Sep. 30, 2015.
"International Search Report & Written Opinion", PCT/US2015/056316, Jan. 21, 2016.
"International Search Report & Written Opinion", PCT/US2015/056320, Jan. 29, 2016.
"International Search Report & Written Opinion", PCT/US2015/056365, Jan. 22, 2016.
"International Search Report & Written Opinion", PCT/US2015/056368, Jan. 25, 2016.
"International Search Report & Written Opinion", PCT/US2015/056598, Jan. 28, 2016.
"International Search Report & Written Opinion", PCT/US2015/056615, Jan. 21, 2016.
"International Search Report & Written Opinion", PCT/US2015/056626, Jan. 21, 2016.
"International Search Report & Written Opinion", PCT/US2015/056632, Jan. 26, 2016.
"International Search Report & Written Opinion", PCT/US2016/013988, Apr. 8, 2016.
"International Search Report & Written Opinion", PCT/US2016/020001, May 23, 2016.
"International Search Report & Written Opinion", PCT/US2016/026860, Jun. 1, 2016.
"International Search Report & Written Opinion", PCT/US2016/026318, Jun. 15, 2016.
"International Search Report & Written Opinion", PCT/US2016/028412, Jun. 27, 2016.
"International Search Report & Written Opinion", PCT/US2016/028206, Jun. 29, 2016.
"International Search Report & Written Opinion", PCT/US16/033182, Jul. 12, 2016.
"International Search Report & Written Opinion", PCT/US2016/036551, Aug. 11, 2016.
"International Search Report & Written Opinion", PCT/US2016/036798, Aug. 11, 2016.
"International Search Report & Written Opinion", PCT/US2016/028205, Aug. 16, 2016.
"International Search Report & Written Opinion", PCT/US2016/032460, Aug. 17, 2016.
"International Search Report & Written Opinion", PCT/US2016/036303, Aug. 24, 2016.
"International Search Report & Written Opinion", PCT/2016/035383, Sep. 2, 2016.
"International Search Report & Written Opinion", PCT/US2016/036286, Sep. 13, 2016.
"International Search Report & Written Opinion", PCT/US2014/039746, Jan. 12, 2015.
"International Search Report & Written Opinion", PCT/US2014/060841, Jan. 7, 2015.
"International Search Report & Written Opinion", PCT/US2015/039848, Oct. 20, 2015.
"International Search Report & Written Opinion", PCT/US2015/047315, Oct. 30, 2015.
"International Search Report & Written Opinion", PCT/US2015/048454, Nov. 11, 2015.
"International Search Report & Written Opinion", PCT/US2015/049928, Nov. 16, 2015.
"International Search Report & Written Opinion", PCT/US2015/049932, Nov. 16, 2015.
"International Search Report & Written Opinion", PCT/US2015/049927, Nov. 24, 2015.
"International Search Report & Written Opinion", PCT/US2015/051193, Nov. 27, 2015.
"International Search Report & Written Opinion", PCT/US2015/051146, Dec. 15, 2015.
"International Search Report & Written Opinion", PCT/US2015/051183, Dec. 15, 2015.
"International Search Report & Written Opinion", PCT/US2015/051194, Dec. 15, 2015.
"International Search Report & Written Opinion", PCT/US2015/051578, Dec. 17, 2015.
"International Search Report & Written Opinion", PCT/US2015/051583, Dec. 21, 2015.
"International Search Report & Written Opinion", PCT/US2015/048458, Dec. 23, 2015.
"International Search Report & Written Opinion", PCT/US2015/051213, Dec. 4, 2015.
"International Search Report & Written Opinion", PCT/US2015/051163, Dec. 7, 2015.
"International Search Report & Written Opinion", PCT/US2014/061445, Feb. 10, 2015.
"International Search Report & Written Opinion", PCT/US16/28207, Jun. 15, 2016.
"International Search Report & Written Opinion", PCT/US2016/015501, Apr. 29, 2016, 11 pages.
"International Search Report & Written Opinion", PCT/US2015/047225, mailed Nov. 6, 2015, Nov. 6, 2015.
"International Search Report and Written Opinion", PCT/US2016/028197, Jun. 24, 2016.
"International Search Report and Written Opinion", PCT/US2016/036289, Aug. 11, 2016.
"International Search Report and Written Opinion", PCT/US2016/036295, Aug. 30, 2016.
"International Search Report and Written Opinion", PCT/US2016/030964, Aug. 4, 2016.

(56) **References Cited**

OTHER PUBLICATIONS

"International Search Report and Written Opinion", PCT/US2016/036553, mailed Aug. 30, 2016, 1-14.
"International Search Report and Written opinion", PCT/US2016/036556, mailed Sep. 22, 2016.
"International Searching Authority", International Search Report and Written Opinion, Sep. 28, 2016, 1-12.
"Invitation to Pay Additional Fees & Partial Search Report", PCT/US2016/028205, Jun. 22, 2016.
"Invitation to Pay Additional Fees & Partial Search Report", PCT/US2016/032430, Jun. 22, 2016.
"Invitation to Pay Additional Fees and, Where Applicable, Protest Fee", PCT/US2016/035384, Aug. 31, 2016, 7 pages.
"Lens Antennas", Altair, feko.info, Jun. 30, 2014, 2 pages.
"Micromem Demonstrates UAV Installation of Power Line Monitoring Mounting System", MicroMem, micromem.com, Mar. 4, 2015, 1-3.
"Parabolic focus pattern fed reflector with shroud", AntennaMagus, antennamagus.com, Jul. 4, 2014.
"PCT International Search Report & Written Opinion", PCT/US2016/026193, Jun. 1, 2016.
"PCT Search Report and Written opinion", PCT/US2016/036297, Sep. 5, 2016.
"Prime Focus Antenna (QRP series)", QuinStar technology, Inc., quinstar.com, Aug. 19, 2016.
"Transducer", IEEE Std 100-2000, Sep. 21, 2015, 1154.
"Troubleshooting Problems Affecting Radio Frequency Communication", cisco.com, Oct. 19, 2009.
"Waveguide Bragg Microcavity", lumerical.com, Sep. 2016.
Adabo, Geraldo J., "Long Range Unmanned Aircraft System for Power Line Inspection of Brazilian Electrical System", Journal of Energy and Power Engineering 8 (2014), Feb. 28, 2014, 394-398.
Alam, M.N. et al., "Novel Surface Wave Exciters for Power Line Fault.Detection and Communications", Department of Electrical Engineering, University of South Carolina, Antennas and Propagation (APSURSI), 2011 IEEE International Symposium, IEEE, 2011, 1-4.
Alam, M.N. et al., "Novel surface wave exciters for power line fault detection and communications", 2011 IEEE International Symposium, 2011.
Ali, Tariq et al., "Diagonal and Vertical Routing Protocol for Underwater Wireless Sensor Network", Procedia-Social and Behavioral Sciences 129, 2014, 372-379.
Ares-Pena, Francisco J. et al., "A simple alternative for beam reconfiguration of array antennas", Progress in Electromagnetics Research 88, 2008, 227-240.
Babakhani, Aydin, "Direct antenna modulation (DAM) for on-chip mm-wave transceivers", Diss. California Institute of Technology, 2008.
Barlow, H.M. et al., "Surface Waves", 621.396.11:538.566, Paper No. 1482 Radio Section, 1953, pp. 329-341.
Benevent, EVANGéLINE, "Transmission lines in MMIC technology", Universitá Mediterranea di Reggio Calabria, Jan. 28, 2010.
Berweger, Samuel et al., "Light on the Tip of a Needle: Plasmonic Nanofocusing for Spectroscopy on the Nanoscale", The Journal of Physical Chemistry Letters; pubs.acs.org/JPCL, 2012, 945-952.
Bing, Benny, "Ubiquitous Broadband Access Networks with Peer-to-Peer Application Support", Evolving the Access Network, 2006, 27-36.
Blattenberger, Kirt, "DroneBased Field Measurement System (dBFMS)", RF Cafe, rfcafe.com, Jul. 29, 2014.
Brambilla, Gilberto et al., "Ultra-low-loss optical fiber nanotapers", Optoelectronics Research Centre, University of Southampton; http://www.orc.soton.ac.uk, vol. 12, No. 10, May 7, 2004, 2258-2263.
Campista, Miguel E. et al., "Improving the Data Transmission Throughput Over the Home Electrical Wiring", The IEEE Conference on Local Computer Networks 30th Anniversary, 2005, 1-8.
Capece, P. et al., "FDTD Analysis of a Circular Coaxial Feeder for Reflector Antenna", Antennas and Propagation Society International Symposium, IEEE Digest, vol. 3, 1997, pp. 1570-1573.
Chandra, Shekar , "Transmission Line Fault Detection & Indication through GSM", IRD India, ISSN (Online): 2347-2812, vol. 2, Iss. 5, 2014.
Choudhury, Romit R., "Utilizing Beamforming Antennas for Wireless Mult-hop Networks", www.slideserve.com, Sep. 20, 2012.
Chu, Eunmi et al., "Self-organizing and self-healing mechanisms in cooperative small cell networks", PIMRC, 2013.
Cliff, Oliver M. et al., "Online localization of radio-tagged wildlife with an autonomous aerial robot system", Proceedings of Robotics Science and Systems XI, 2015, 1317.
Crosswell, "Aperture excited dielectric antennas", http://ntrs.nasa.gov/archive/nasa/casi.ntrs.nasa.gov/19740017567.pdf, 1974.
Daniel, Kai et al., "Using Public Network Infrastructures for UAV Remote Sensing in Civilian Security Operations", Homeland Security Affairs, Supplement 3, Mar. 2011, 11 pages.
De Freitas, Carvalho et al., "Unmanned Air Vehicle Based Localization and Range Estimation of WiFi Nodes", 2014.
Debord, Benoit et al., "Generation and confinement of microwave gas-plasma in photonic dielectric microstructure", Optics express 21.21, 2013, 25509-25516.
Deilmann, Michael, "Silicon oxide permeation barrier coating and sterilization of PET bottles by pulsed low-pressure microwave plasmas", Diss, 2008.
Deng, Chuang et al., "Unmanned Aerial Vehicles for Power Line Inspection: A Cooperative Way in Platforms and Communications", Journal of Communicatinos Vol No. 9, No. 9, Sep. 2014, 687-692.
Doshi, D.A. et al., "Real Time Fault Failure Detection in Power Distribution Line using Power Line Communication", International Journal of Engineering Science 4834, 2016.
Ehyaie, Danial, Novel Approaches to the Design of Phased Array Antennas, Diss. The University of Michigan, 2011.
Elmore, Glenn et al., "A Surface Wave Transmission Line", QEX, May/Jun. 2012, pp. 3-9.
Eom, Seung-Hyun et al., "Pattern switchable antenna system using inkjet-printed directional bow-tie for bi-direction sensing applications", Sensors 15.12, 2015, 31171-31179.
Erickson, Katherine, "Conductive cylindrical surface waveguides", 2012.
Erickson, Katherine, "Conductive cylindrical surface waveguides", www.ideals.illinois.edu/bitstream/handle/2142/30914, 2012.
Farzaneh, Masoud et al., "Systems for Prediction and Monitoring of Ice Shedding, Anti-Cicing and De-Icing for Power Line Conductors and Ground Wires", Dec. 1, 2010, 1-100.
Feng, Wei et al., "Downlink power allocation for distributed antenna systems in a multi-cell environment", 2009 5th International Conference on Wireless Communications, Networking and Mobile Computing. IEEE, 2009.
Fenn, Alan J. et al., "A Terrestrial Air Link for Evaluating Dual-Polarization Techniques in Satellite Communications", vol. 9, No. 1, The Lincoln Laboratory Journal, 1996, 3-18.
Fitzgerald, William D., "A 35-GHz Beam Waveguide System for the Millimeter-Wave Radar", The Lincoln Laboratory Journal, vol. 5, No. 2, 1992, 245-272.
Ford, Steven, "AT&T's new antenna system will boost cellular. coverage at Walt Disney World", Orlando Sentinel, orlandosentinel.com, Mar. 9, 2014.
Friedman, M et al., "Low-Loss RF Transport Over Long Distances", IEEE Transactions on Microwave Theory and Techniques, vol. 49, No. 2, Feb. 2001, 8 pages.
Geterud, Erik, "Design and Optimization of Wideband Hat-Fed Reflector Antenna with Radome for Satellite Earth Station", http://publications.lib.chalmers.se/records/fulltext/163718.pdf, Discloses Frequency Selective Surfaces for antenna coverings for weather protection (table of materials on pp. 29-30; pp. 37-46)., 2012.
Gloeckler, R, "Phased Array for Millimeter Wave Frequencies", International Journal of Infrared and Millimeter Waves, Springer, vol. 11, No. 2, Feb. 1, 1990.
Guo, Shuo, "Detecting Faulty Nodes with Data Errors for Wireless Sensor Networks", 2014.

(56) **References Cited**

OTHER PUBLICATIONS

Hadi, Ghozali S. et al., "Autonomous UAV System Development for Payload Dropping Mission", The Journal of Instrumentation, Automation and Systems, vol. 1, No. 2, 2014, pp. 72-22.
Haider, Muhammad Kumail et al., "Mobility resilience and overhead constrained adaptation in directional 60 GHz WLANs: protocol design and system implementation", Proceedings of the 17th ACM International Symposium on Mobile Ad Hoc Networking and Computing. ACM, 2016.
Hanashi, Abdalla M. et al., "Effect of the Dish Angle on the Wet Antenna Attenuation", IEEE, 2014, 1-4.
Hays, Phillip, "SPG-49 Tracking Radar", http://web.archive.org/web/20150314053758/http://www.okieboat.com/SPG-49%20description.html, 2015.
Heo, Joon et al., "Identity-Based Mutual Device Authentication Schemes for PLC Systems", IEEE International Symposium on Power Line Communications and Its Applications, 2008, pp. 47-51.
Howard, Courtney, "UAV command, control & communications", Military & Aerospace Electronics, militaryaerospace.com, Jul. 11, 2013, 15 pages.
Huth, G. K., "Integrated source and channel encoded digital communication system design study", http://ntrs.nasa.gov/archive/nasa/casi.ntrs.nasa.gov/19750003064.pdf, 1974.
Islam, M. T., "Coplanar Waveguide Fed Microstrip Patch Antenna", Information Technology Journal 9.2 (2010): 367-370., 2010, 367-370.
James, J. R. et al., "Investigations and Comparisons of New Types of Millimetre-Wave Planar Arrays Using Microstrip and Dielectric Structures", Royal Military College of Science, Apr. 1985, 122 pages.
Jiang, Peng, "A New Method for Node Fault Detection in Wireless Sensor Networks", 2009.
Jones, Jr., Howard S., "Conformal and Small Antenna Designs", U.S. Army Electronics Research and Development Command, Harry Diamond Laboratories, Apr. 1981, 32 pages.
Karbowiak, A. E. et al., "Characteristics of Waveguides for Long-Distance Transmission", Journal of Research of the National Bureau of Standards, vol. 65D, No. 1, Jan.-Feb. 1961, May 23, 1960, 75-88.
Katrasnik, Jaka, "New Robot for Power Line Inspection", 2008 IEEE Conference on Robotics, Automation and Mechatronics, 2008, 1-6.
Kim, Myungsik et al., "Automated RFID-based identification system for steel coils", Progress In Electromagnetics Research 131, 2012, 1-17.
Kima, Yi-Gon et al., "Generating and detecting torsional guided waves using magnetostrictive sensors of crossed coils", Chonnam National University, Republic of Korea, Elsevier Ltd., 2010.
Kleinrock, Leonard et al., "On measured behavior of the ARPA network", Proceedings of the May 610, 1974.
Kliros, George, "Dielectric-EBG covered conical antenna for UWB applications", https://www.researchgate.net/profile/George_Kliros/publication/235322849_Dielectric-EBG_covered_conical_antenna_for_UWB_applications/links/54329e410cf225bddcc7c037.pdf, Disclosing a quasi-planar wideband conical antenna coated with alternating high- and low-permittivity dielectric spherical shells (Section 2; Figure 1 on the 3rd Page)., 2010.
Koga, Hisao et al., "High-Speed Power Line Communication System Based on Wavelet OFDM", 7th International Symposium on Power-Line Communications and Its Applications, Mar. 26-28, 2003, 226-231.
Kune, Denis F. et al., "Ghost Talk: Mitigating EMI Signal Injection Attacks against Analog Sensors", 2013 IEEE Symposium on Security and Privacy, 145-159.
Laforte, J.L. et al., "State-of-the-art on power line de-icing", Atmospheric Research 46, 143-158, 1998.
Lazaropoulos, Athanasios G., "Wireless sensor network design for transmission line monitoring, metering, and controlling: introducing broadband over power lines-enhanced network model (BPLeNM)", ISRN Power Engineering, 2014.
Lee, Joseph C., "A Compact Q-/K-Band Dual Frequency Feed Horn", No. TR-645, Massachusetts Institute of Technology, Lincoln Laboratory, May 3, 1983, 40 pages.
Li, Mo et al., "Underground structure monitoring with wireless sensor networks", Proceedings of the 6th international conference on Information processing in sensor networks, ACM, 2007.
Li, Xi et al., "A FCM-Based peer grouping scheme for node failure recovery in wireless P2P file sharing", 2009 IEEE International Conference on Communications, 2009.
Liu, et al., "A 25 Gb/s (/km 2) urban wireless network beyond IMTadvanced", IEEE Communications Magazine 49.2, 2011, 122-129.
Matsukawa, et al., A dynamic channel assignment scheme for. distributed antenna networks. Vehicular Technology Conference (VTC Spring), 2012 IEEE 75th. IEEE, 2012.
Meessen, A., "Production of EM Surface Waves by Superconducting Spheres: A New Type of Harmonic Oscillators", Progress in Electromagnetics Research Symposium Proceedings, Moscow, Russia, Aug. 19-23, 2012, pp. 529-533.
Miller, Ashley et al., "Pathway to Ubiquitous Broadband: Environments, Policies, and Technologies to Implementation Josh Winn Matthew Burch", Oct. 2016.
Miller, David A., "Establishing Optimal Wave Communication Channels Automatically", Journal of Lightwave Technology, vol. 31, No.24, Dec. 15, 2013, 3987-3994.
Mishra, Sumita et al., "Load Balancing Optimization in LTE/LTEA Cellular Networks: A Review", arXiv preprint arXiv:1412.7273 (2014), 2014, 1-7.
Mori, A. et al., "The Power Line Transmission.Characteristics for an OFDM Signal", Progress in Electromagnetics Research, PIER 61, Musashi Institute of Technology, 2006, 279-290.
Mushref, Muhammad, "Matrix solution to electromagnetic scattering by a conducting cylinder with an eccentric metamaterial coating", http://www.sciencedirect.com/science/article/pii/S0022247X06011450/pdf?md5=4823be0348a3771b5cec9ffb7f326c2c&pid=1-s2.0-S0022247X06011450-main.pdf, Discloses controlling antenna radiation pattern with coatings, 2007.
Nakano, Hisamatsu, "http://repo.lib.hosei.ac.jp/bitstream/10114/3835/1/31_TAP(Low-Profile).pdf", Discloses affecting radiation patterns with alternating high- and low-permittivity dielectric shell coatings and formulae for dterimining the results (Figures 2-5 on p. 1865)., 2000.
Nandi, Somen et al., "Computing for rural empowerment: enabled by last-mile telecommunications", IEEE Communications Magazine 54.6, 2016, 102-109.
Nikitin, A. Y. et al., "Efficient Coupling of Light to Graphene Plasmons by Compressing Surface Polaritons with Tapered Bulk Materials", NanoLetters; pubs.acs.org/NanoLett, Apr. 28, 2014, 2896-2901.
Nikitin, Pavel V. et al., "Propagation Model for the HVAC Duct as a Communication Channel", IEEE Transactions on Antennas and Propagation 51.5, 2003.
Pato, et al., On building a distributed antenna system with joint signal processing for next generation wireless access networks: The FUTON approach. 7th Conference on Telecommunications, Portugal. 2008.
PCT, "International Search Report", Oct. 25, 2016, 1-12.
Pike, Kevin J. et al., "A spectrometer designed for 6.7 and 14.1 T DNP-enhanced solid-state MAS NMR using quasi-optical microwave transmission", Journal of Magnetic Resonance, 2012, 9 pages.
Ponchak, George E. et al., "A New Model for Broadband Waveguide to Microstrip Transition Design", NASA TM-88905, Dec. 1, 1986, 18 pgs.
Qi, Xue et al., "Ad hoc QoS ondemand routing (AQOR) in mobile ad hoc networks", Journal of parallel and distributed computing 63.2, 2003, 154-165.
Qiang, Ma, "Sensor Fault Detection in Wireless Sensor Networks and Avoiding the Path Failure Nodes", 2015.
Qiu, Lili, "Fault Detection, Isolation, and Diagnosis in Multihop Wireless Networks", 2003.

(56) **References Cited**

OTHER PUBLICATIONS

Rangan, Sundeep et al., "Millimeter-Wave Cellular Wireless Networks: Potentials and Challenges", Proceedings of the IEEE, vol. 102, No. 3, Mar. 2014, 366-385.
Rangel, Rodrigo K. et al., "Sistema de lnspecao de Linhas de Transmissao de Energia Electrica Utilizando Veiculos Aereos Nao-Tripulados", Sep. 14-16, 2009, 1-9.
Ren-Bin, Zhong et al., "Surface plasmon wave propagation along single metal wire", Chin. Phys. B, vol. 21, No. 11, May 2, 2012, 9 pages.
Rosenberg, Uwe et al., "A novel frequency-selective power combiner/divider in single-layer substrate integrated waveguide technology", IEEE Microwave and Wireless Components Letters, vol. 23, No. 8, Aug. 2013, 406-408.
Sahoo, Srikanta, "Faulty Node Detection in Wireless Sensor Networks Using Cluster", 2013.
Scerri, Paul et al., "Geolocation of RF emitters by many UAVs,", AIAA Infotech@Aerospace 2007 Conference and Exhibit, 2007.
Shankland, Steven, "Lowly DSL poised for gigabit speed boost", C|Net, cnet.com, Oct. 21, 2014.
Sharma, Archana et al., "Dielectric Resonator Antenna for X band Microwave Application", Research & Reviews | International Journal of Advanced Research in Electrical, Electronics and Instrumentation.Engineering, Oct. 2016.
Shila, Devu M., "Load-Aware Traffic Engineering for Mesh Networks", Computer Communications 31.7, 2008, 1460-1469.
Silver, Ralph U., "Local Loop Overview", National Communications System (NCS), BellSouth Network Training, newnetworks.com, Aug. 2016.
Simons, Rainee N., "Coplanar Waveguide Feeds for Phased Array Antennas", Solid State Technology Branch of NASA Lewis Research Center Fourth Annual Digest (1992): 61., Conference on Advanced Space Exploration Initiative Technologies cosponsored by AIAA, NASA and OAI, Sep. 4-6, 1991, 1-9.
Singh, Seema M. et al., "Broadband Over Power Lines a White Paper", State of New Jersey, Division of the Ratepayer Advocate, NJ, Oct. 2016.
Souryal, Michael R. et al., "Rapidly Deployable Mesh Network Testbed", https://pdfs.semanticscholar.org/f914/1ce6999c4095eab3bdea64574576.41.pdf, 2009.
Spencer, D G., "Novel Millimeter ACC Antenna Feed", IEEE Colloquium on Antennas for Automotives, Mar. 10, 2000.
Stancil, Daniel D. et al., "High-speed internet access via HVAC ducts: a new approach", Global Telecommunications Conference, IEEE vol. 6., 2001.
Sundqvist, Lassi, "Cellular Controlled Drone Experiment: Evaluation of Network Requirements," (2015).
Sung-Woo, Lee, "Mutual Coupling Considerations in the Development of Multi-feed Antenna Systems" http://ntrs.nasa.gov/archive/nasa/casi.ntrs.nasa.gov/19750003064.pdf, 2008.
Szczys, Mike, "Cameras Perch on Power Lines, Steal Electricity", http://hackaday.com/2010/06/28/cameras-perch-on-power-lines-steal-electricity/, Discloses cameras that clamp on to power lines and use induction as a power source., 2010.
Talbot, David, "Adapting Old-Style Phone Wires for Superfast Internet", Adapting Old-Style Phone Wires for Superfast Internet, Jul. 30, 2013.
Tantawi, Sami G. et al., "High-power multimode X-band rf pulse compression system for future linear colliders", Physical Review Special Topics-Accelerators and Beams, 1098-4402/05/8(4)/042002, 2005, 19 pages.
Teng, Ervin et al., "Aerial Sensing and Characterization of ThreeDimensionalRF Fields," Univ. at Buffalo, cse.buffalo.edu, accessed: Sep. 2016.
Thota, Saigopal et al., "Computing for Rural Empowerment: Enabled By Last-Mile Telecommunications (Extended Version)", Technical Report, 2013.
Wade, Paul, "Multiple Reflector Dish Antennas", http://www.w1ghz.org/antbook/conf/Multiple_reflector_antennas.pdf, 2004.
Wang, Wei, "Optimization Design of an Inductive Energy Harvesting Device for Wireless Power Supply System Overhead High-Voltage Power Lines", https://pdfs.semanticscholar.org/3941/601af7a21d55e8b57ab0c50d5f1d9.
f9f6868.pdf, Discloses an induction based energy harvesting device that.takes energy from overhead powerlines (Figure 4)., 2016.
Wang, Xingfu et al., "Zigzag coverage scheme algorithm & analysis for wireless sensor networks", Network Protocols and Algorithms 5.4, 2013, 19-38.
Wenger, N., "The launching of surface waves on an axial-cylindrical reactive surface", IEEE Transactions on Antennas and Propagation 13.1, 1965, 126-134.
Werner, Louis B. et al., "Operation Greenhouse", Scientific Director's Report of Atomic Weapon Tests at Eniwetok, Annex 6.7 Contimation-Decontamination Studies Naval Radiological Defense Lab, 1951.
Wolfe, Victor et al., "Feasibility Study of Utilizing 4G LTE Signals in.Combination With Unmanned Aerial Vehicles for the Purpose of Search and Rescue of Avalanche Victims (Increment 1)", University of Colorado at Boulder, Research Report, 2014, 26 pages.
Yeh, C. et al., "Thin-Ribbon Tapered Coupler for Dielectric Waveguides", May 15, 1994, 42-48.
Yilmaz, et al., Self-optimization of coverage and capacity in LTE using adaptive antenna systems. Diss. Aalto University, 2010.
Zhang, Ming et al., "PlanetSeer: Internet Path Failure Monitoring and Characterization in WideArea Services", OSDI, vol. 4., 2004.

* cited by examiner

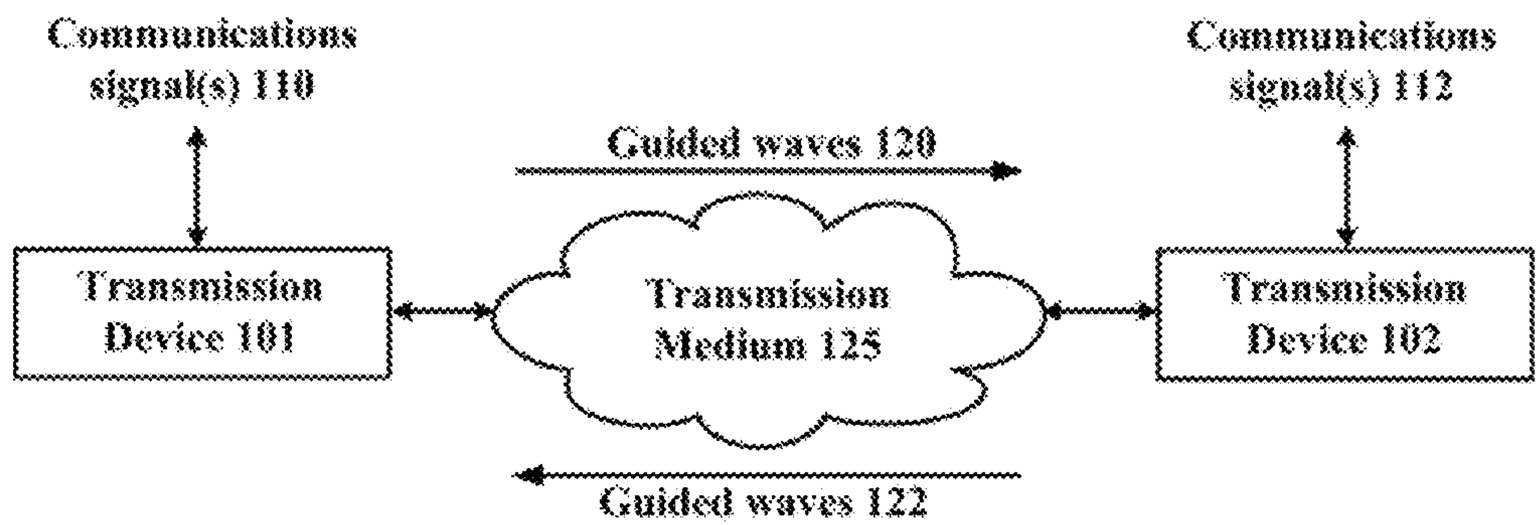

100

FIG. 1

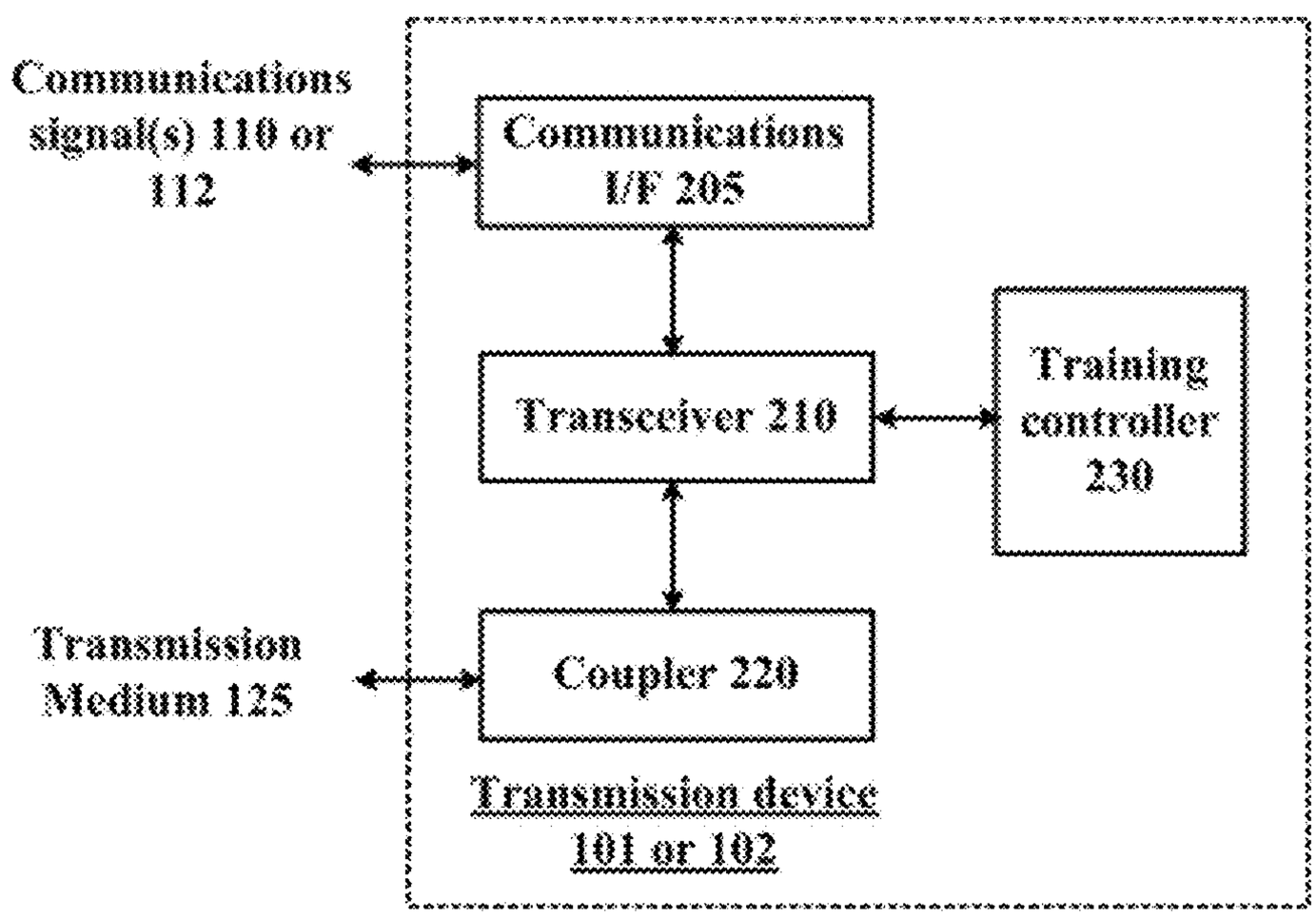

200

FIG. 2

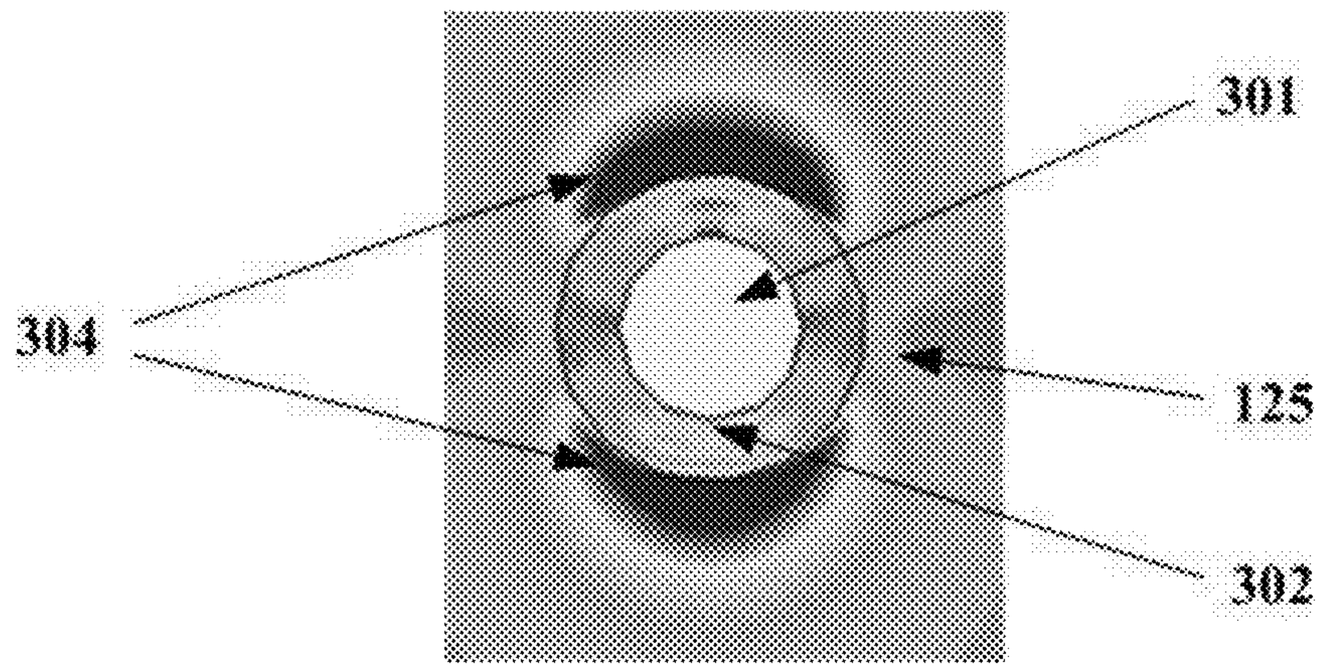

300

FIG. 3

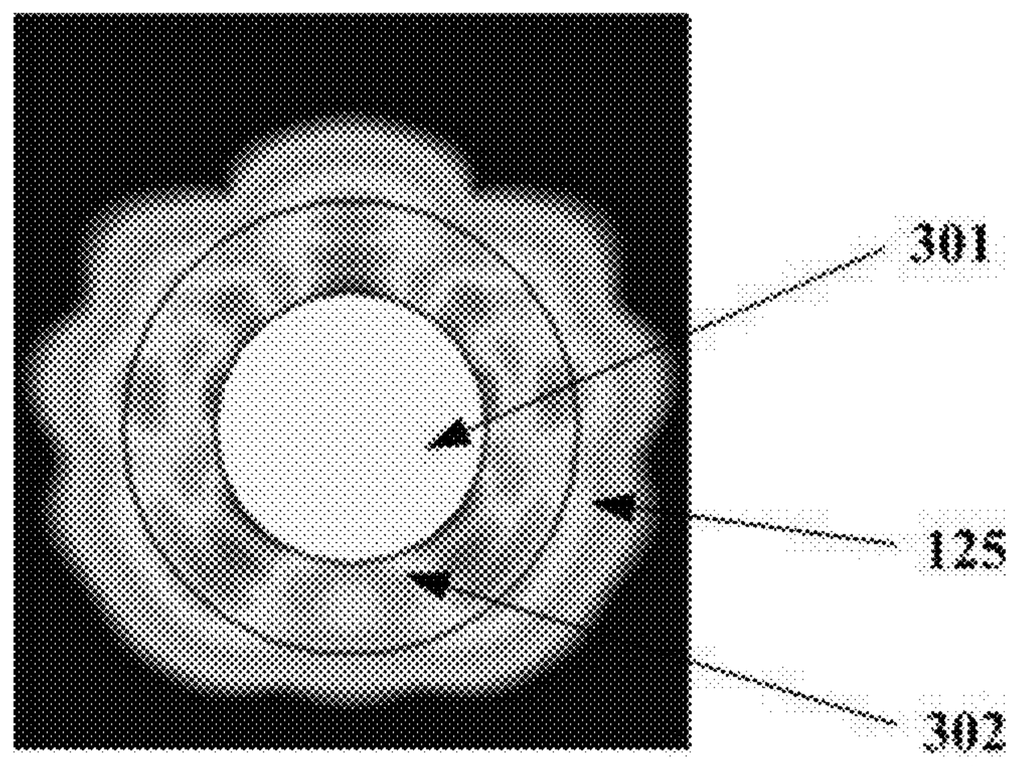

400

FIG. 4

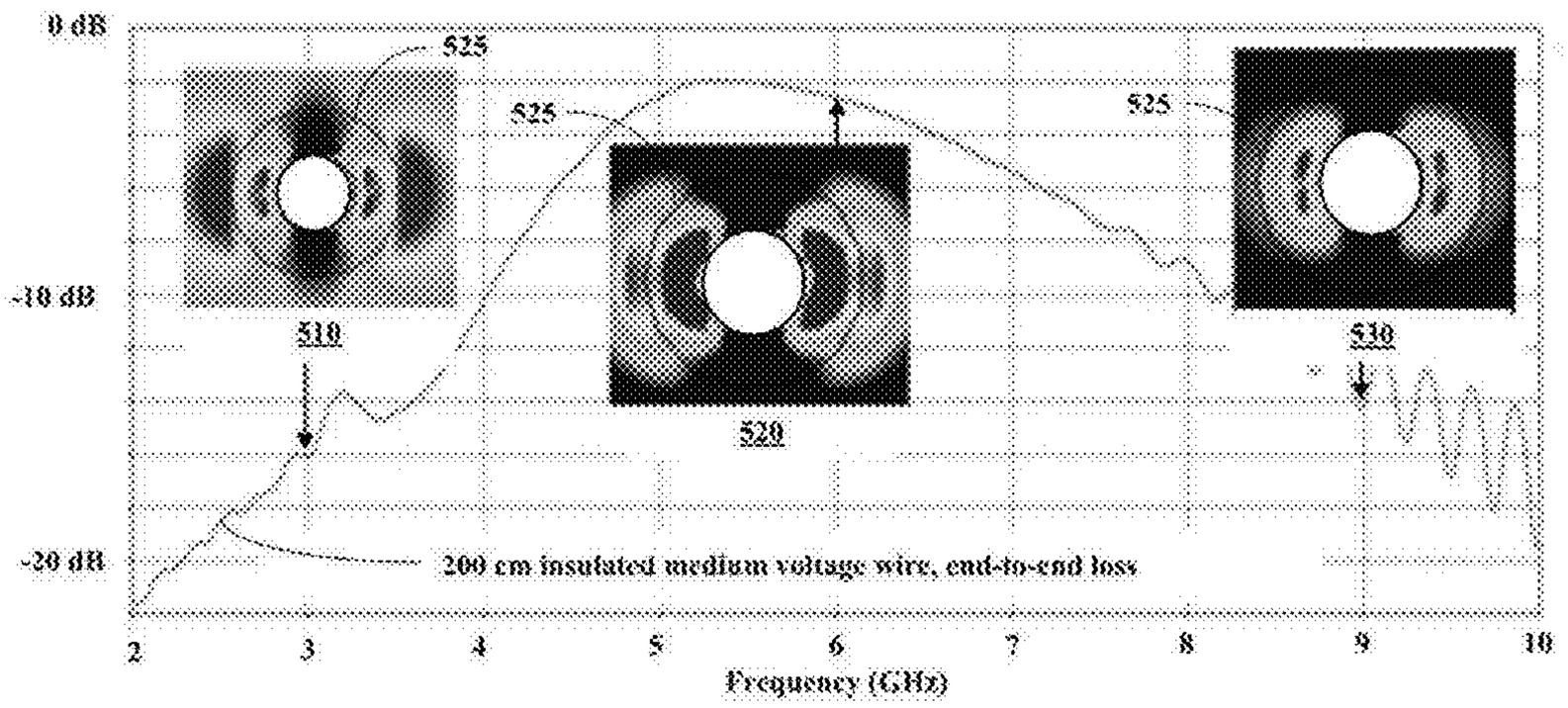

500

FIG. 5A

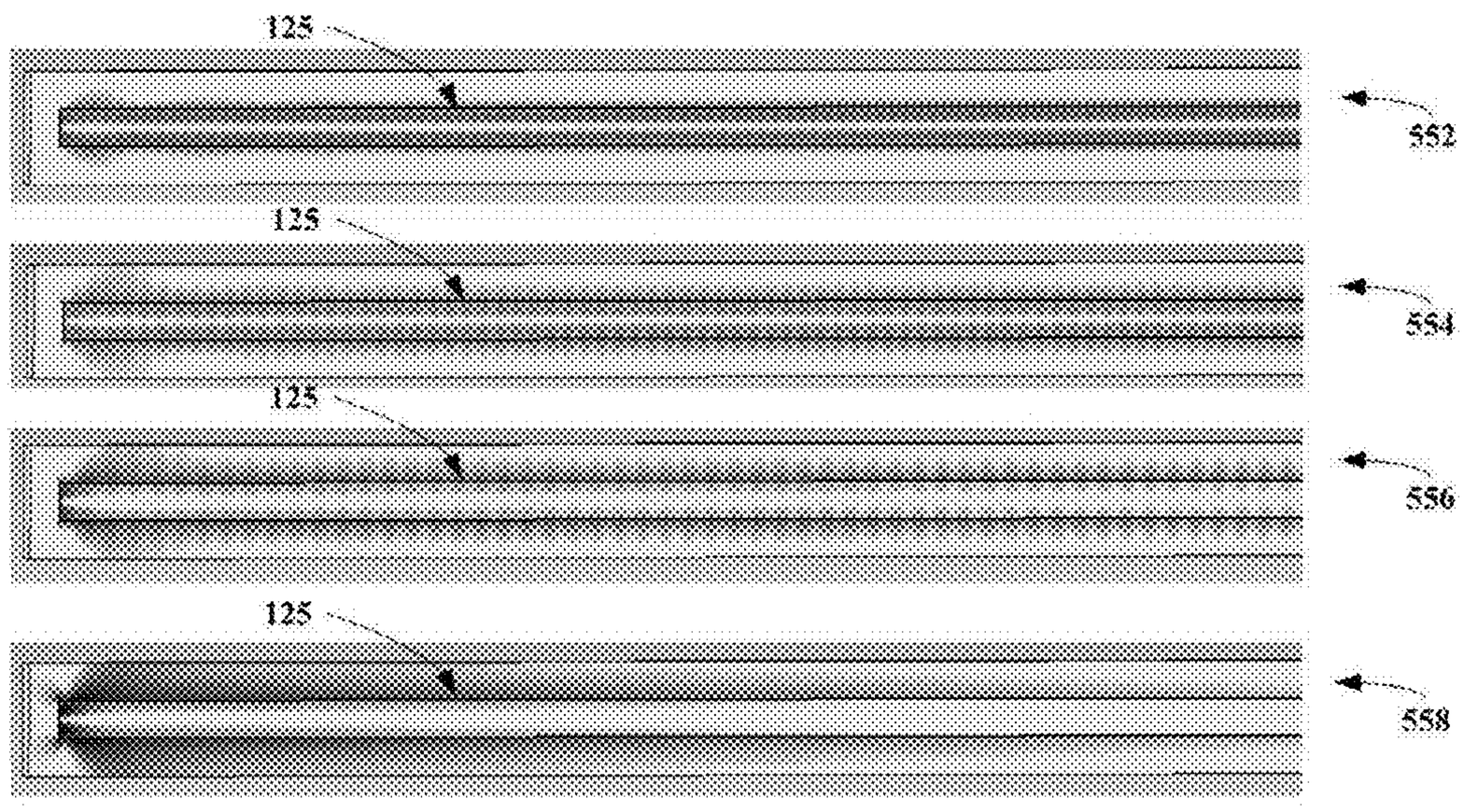

550

FIG. 5B

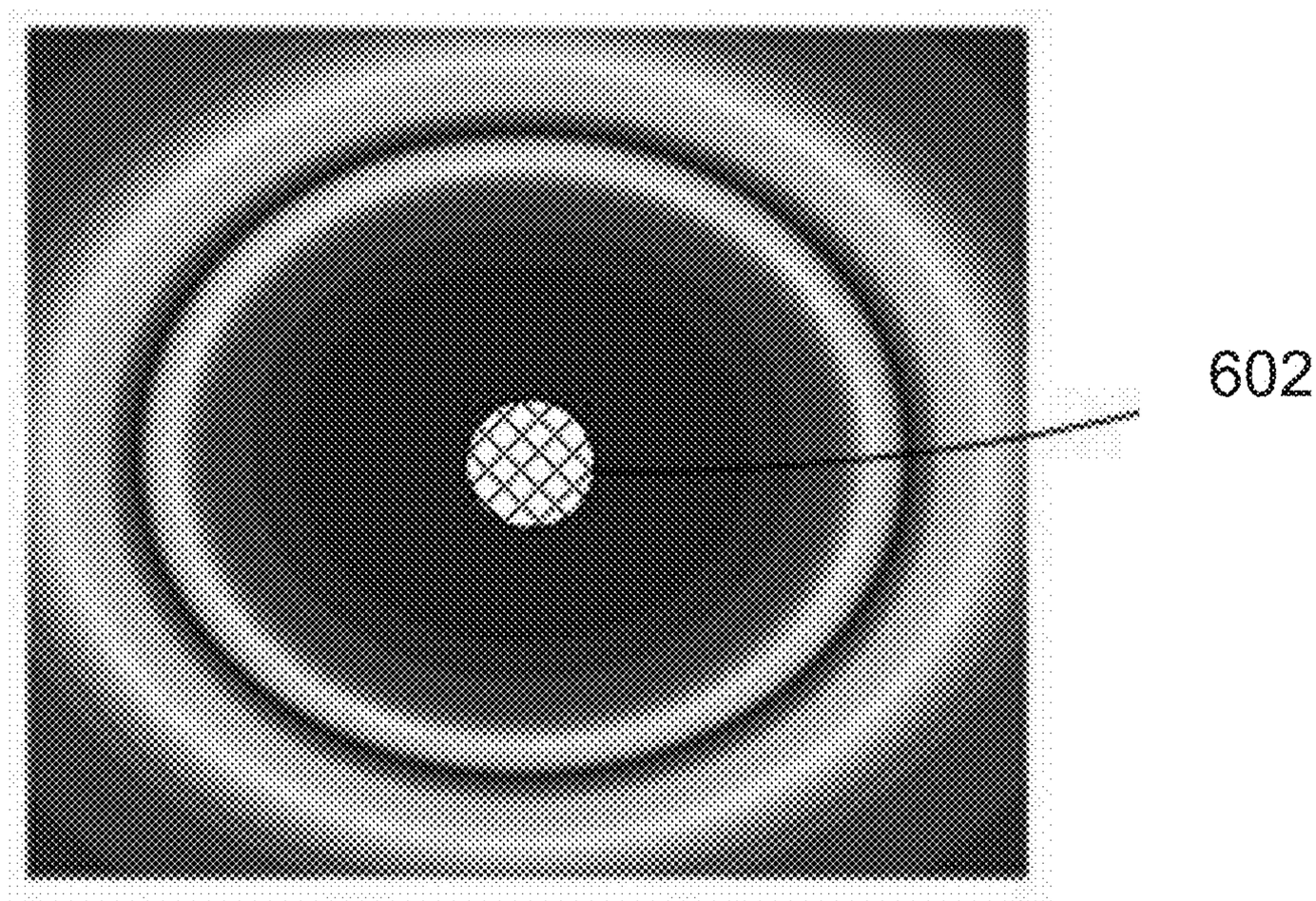

600

FIG. 6

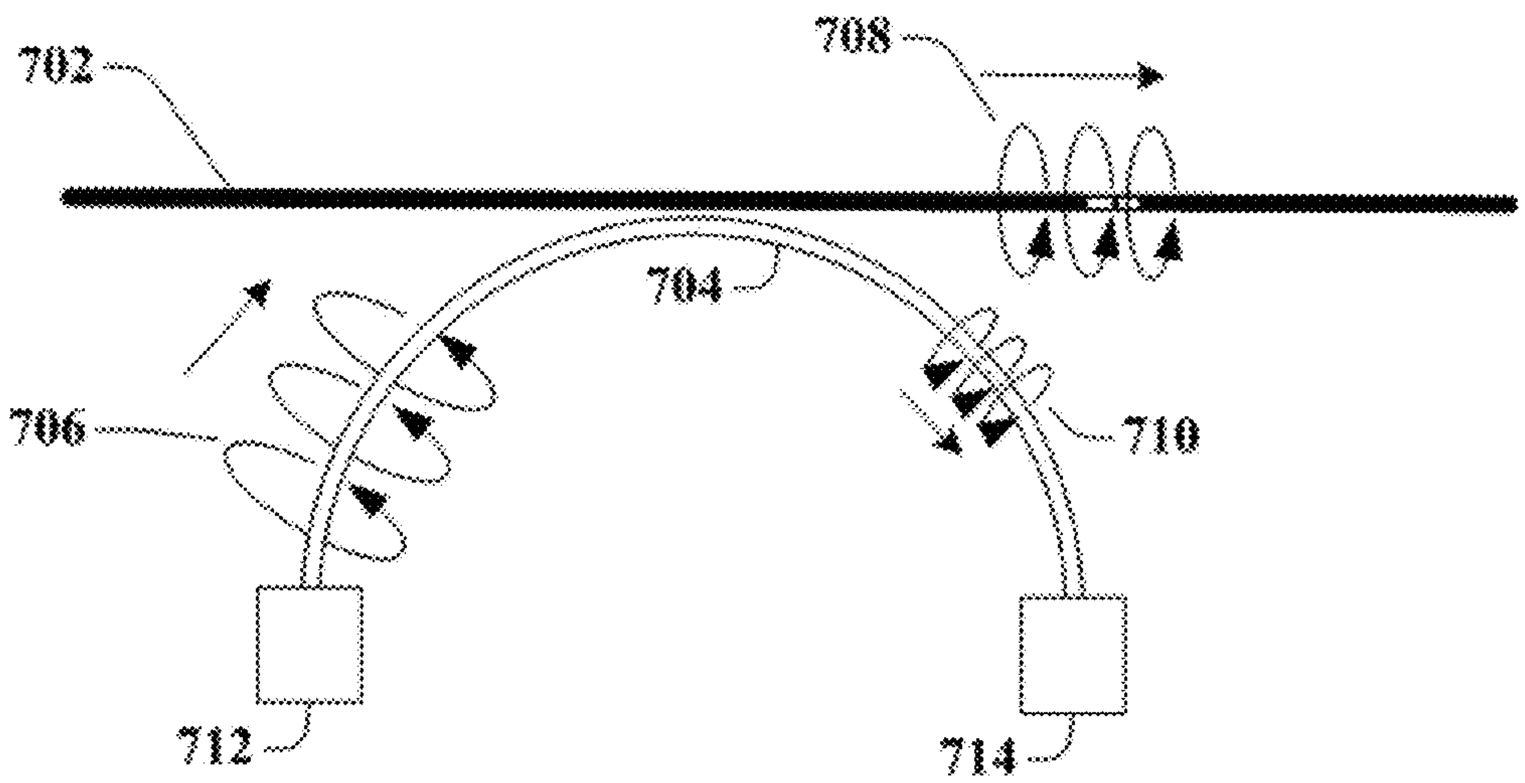

700

FIG. 7

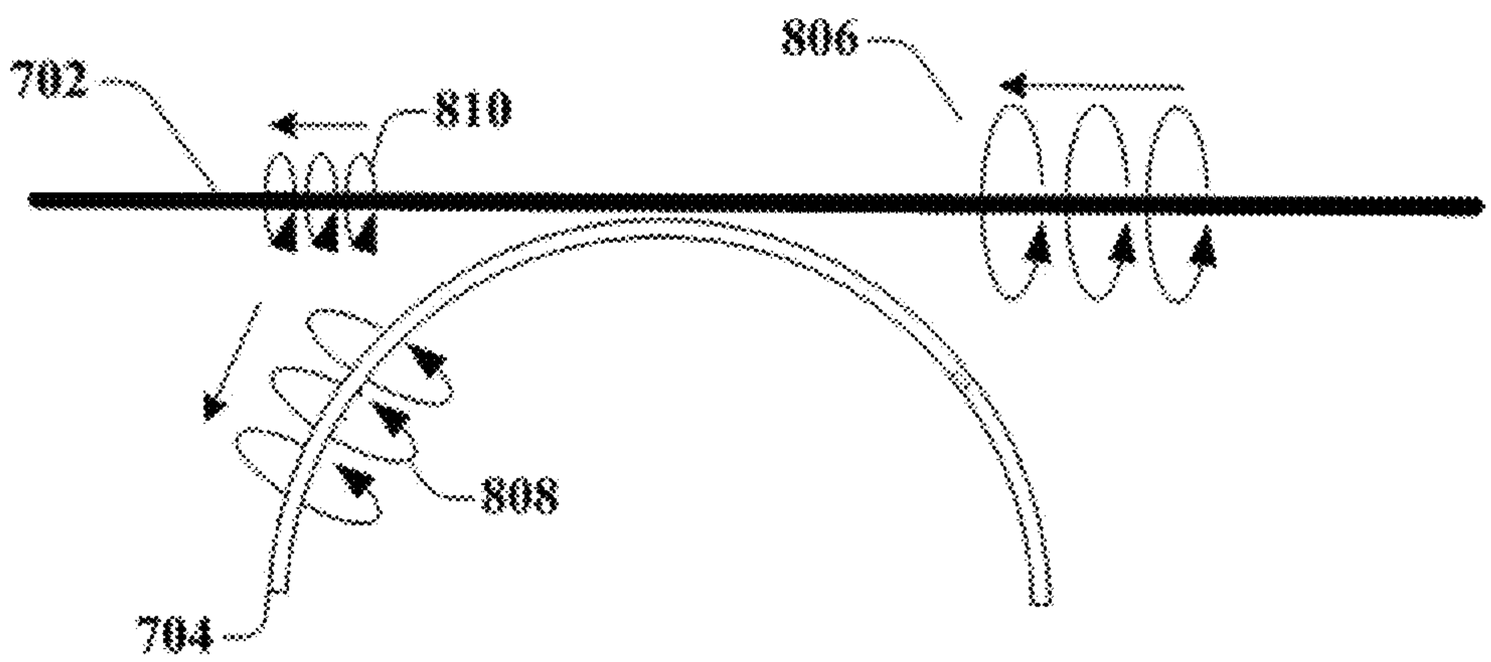

800

FIG. 8

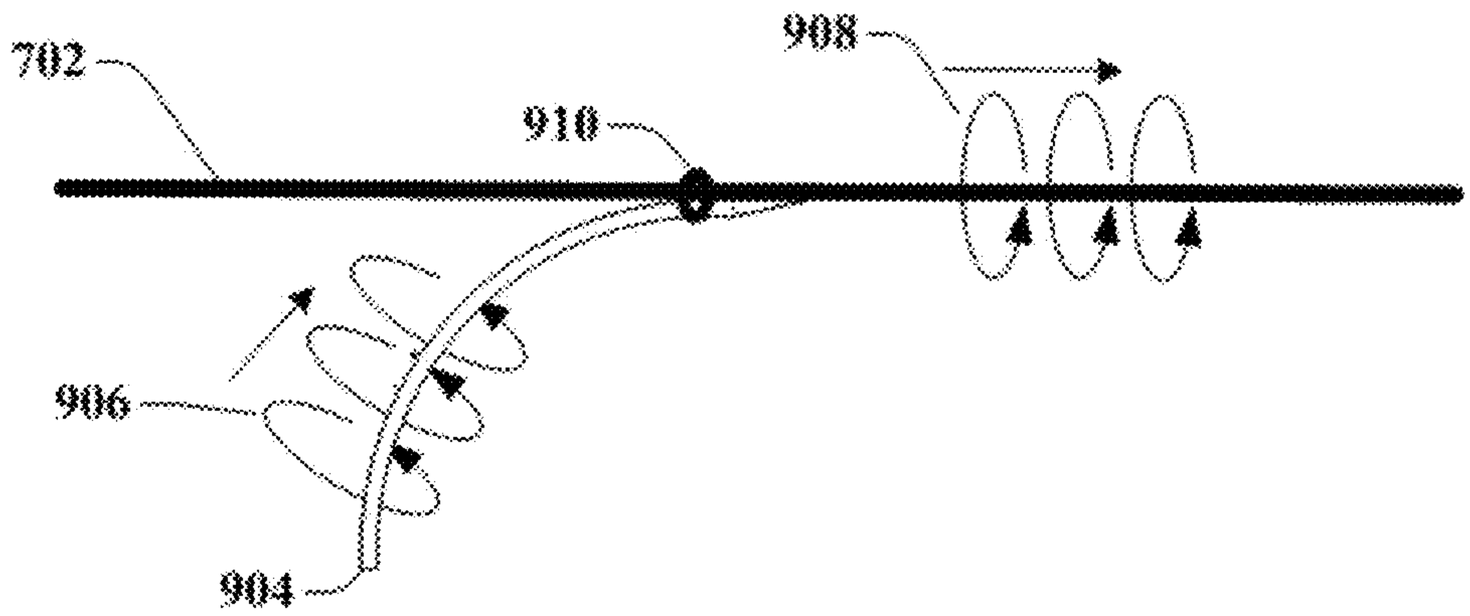

900

FIG. 9A

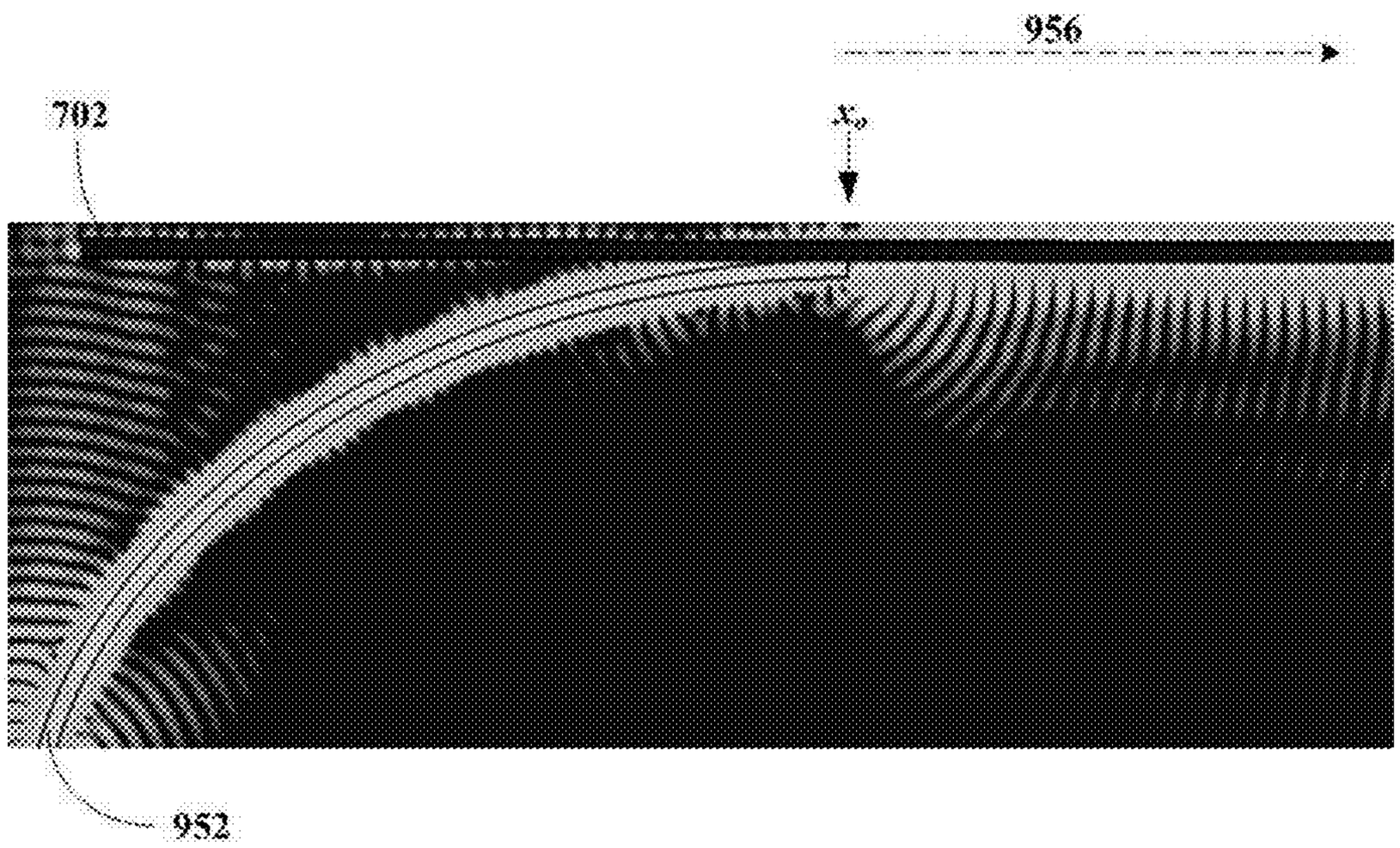

950

FIG. 9B

1000

FIG. 10A

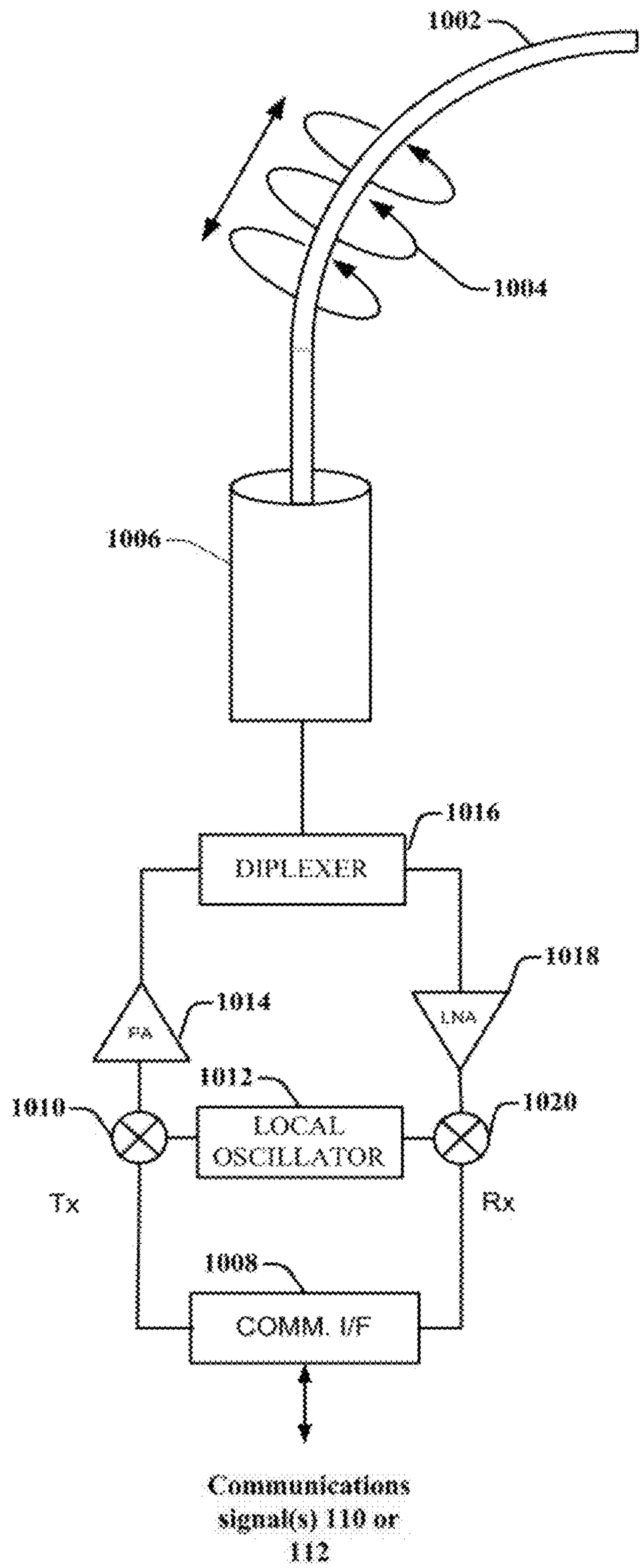
1002
1004
1006
1016
DIPLEXER
1018
LNA
1014
PA
1012
1010
LOCAL
OSCILLATOR
1020
Tx
Rx
1008
COMM. I/F
Communications
signal(s) 110 or
112

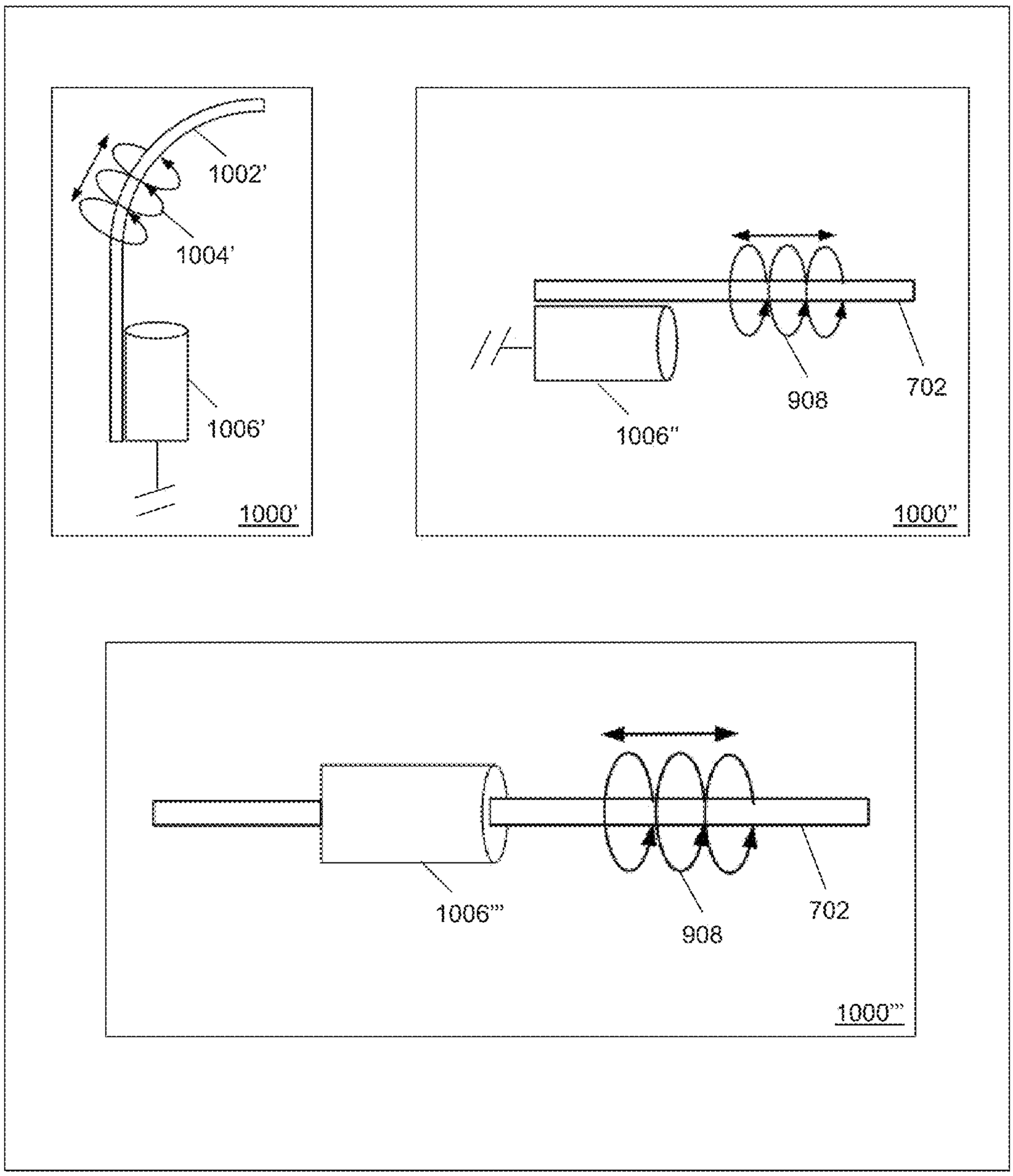

FIG. 10B

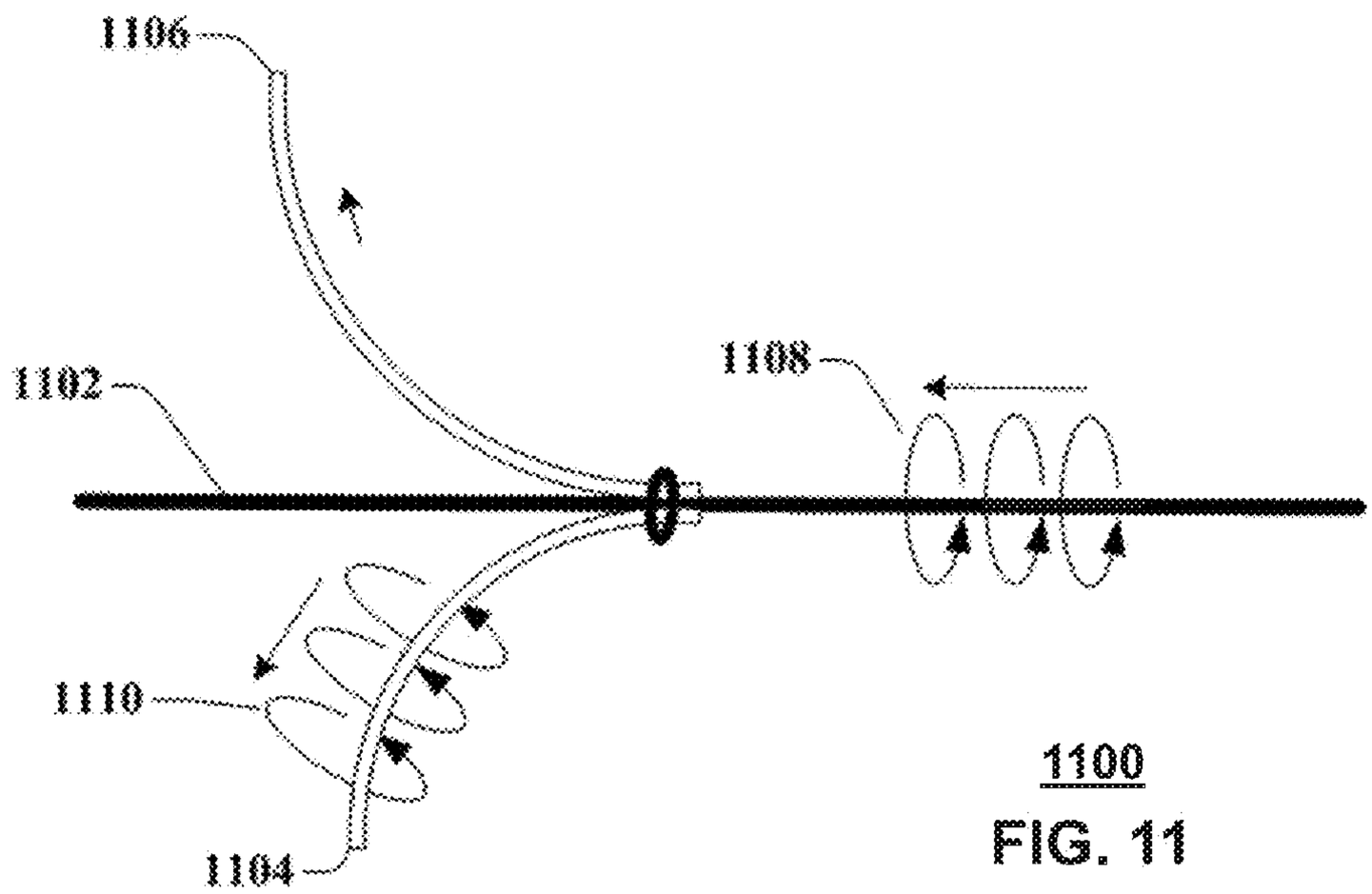

1100
FIG. 11

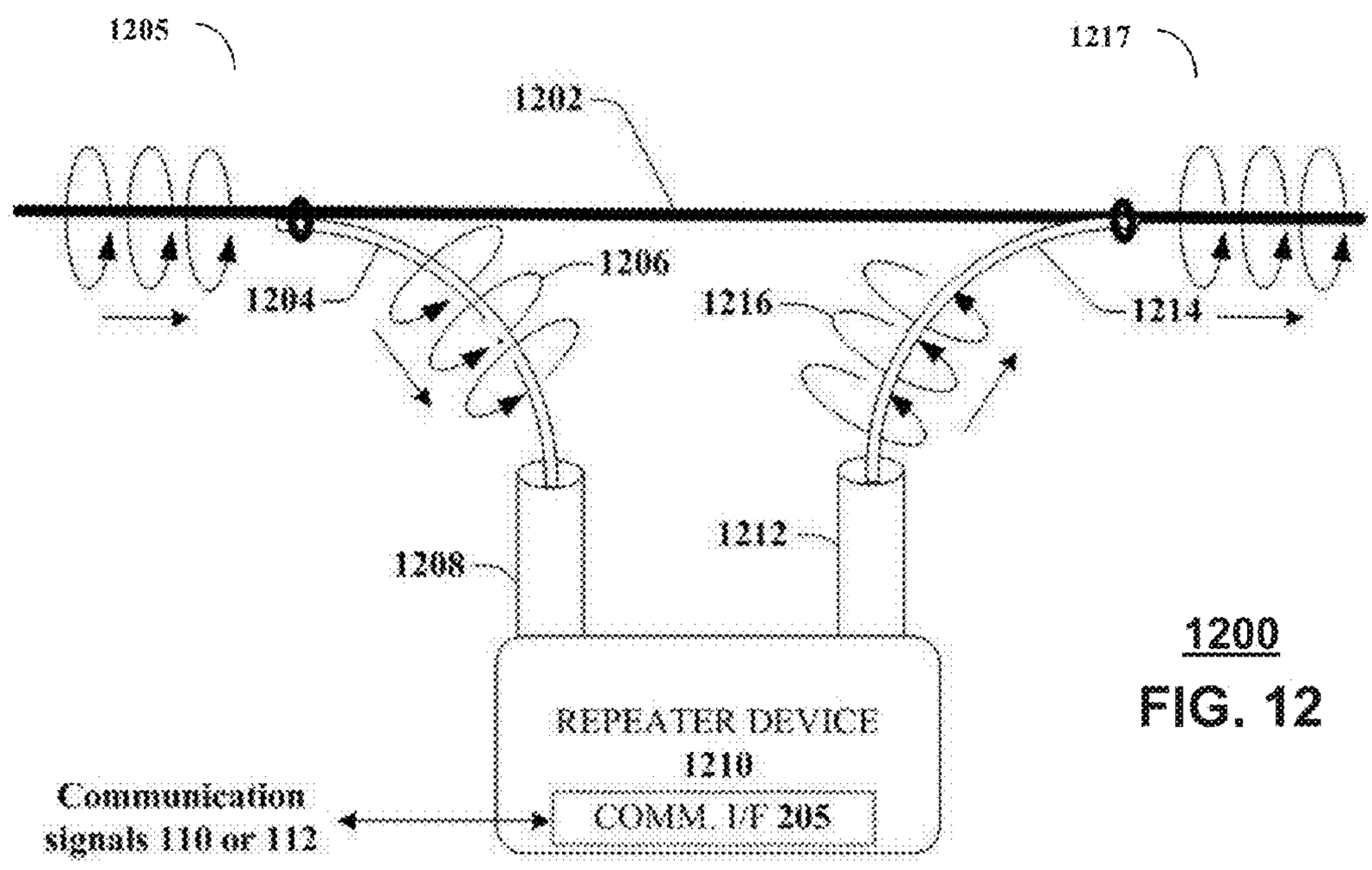

1200
FIG. 12

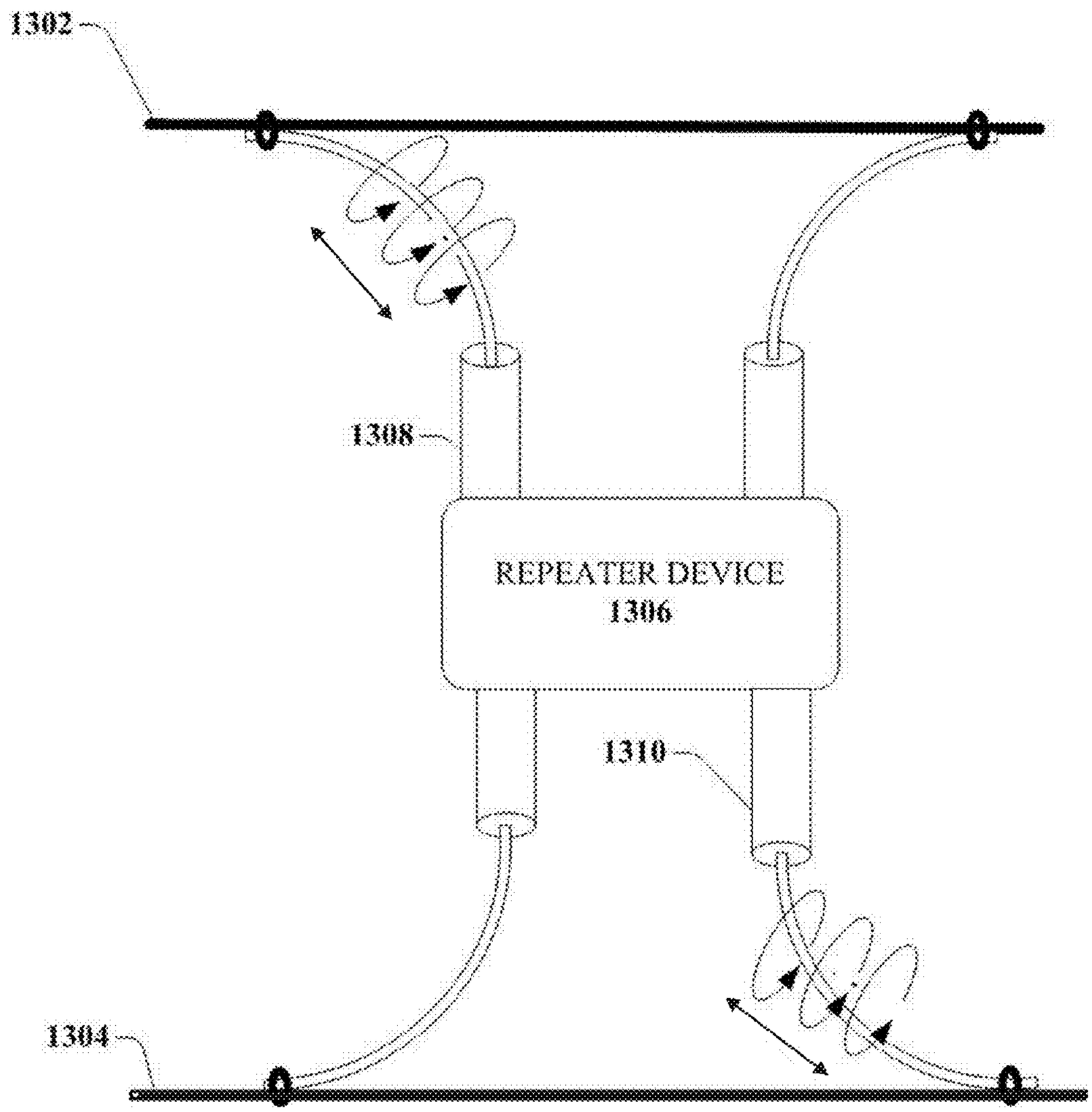

1300

FIG. 13

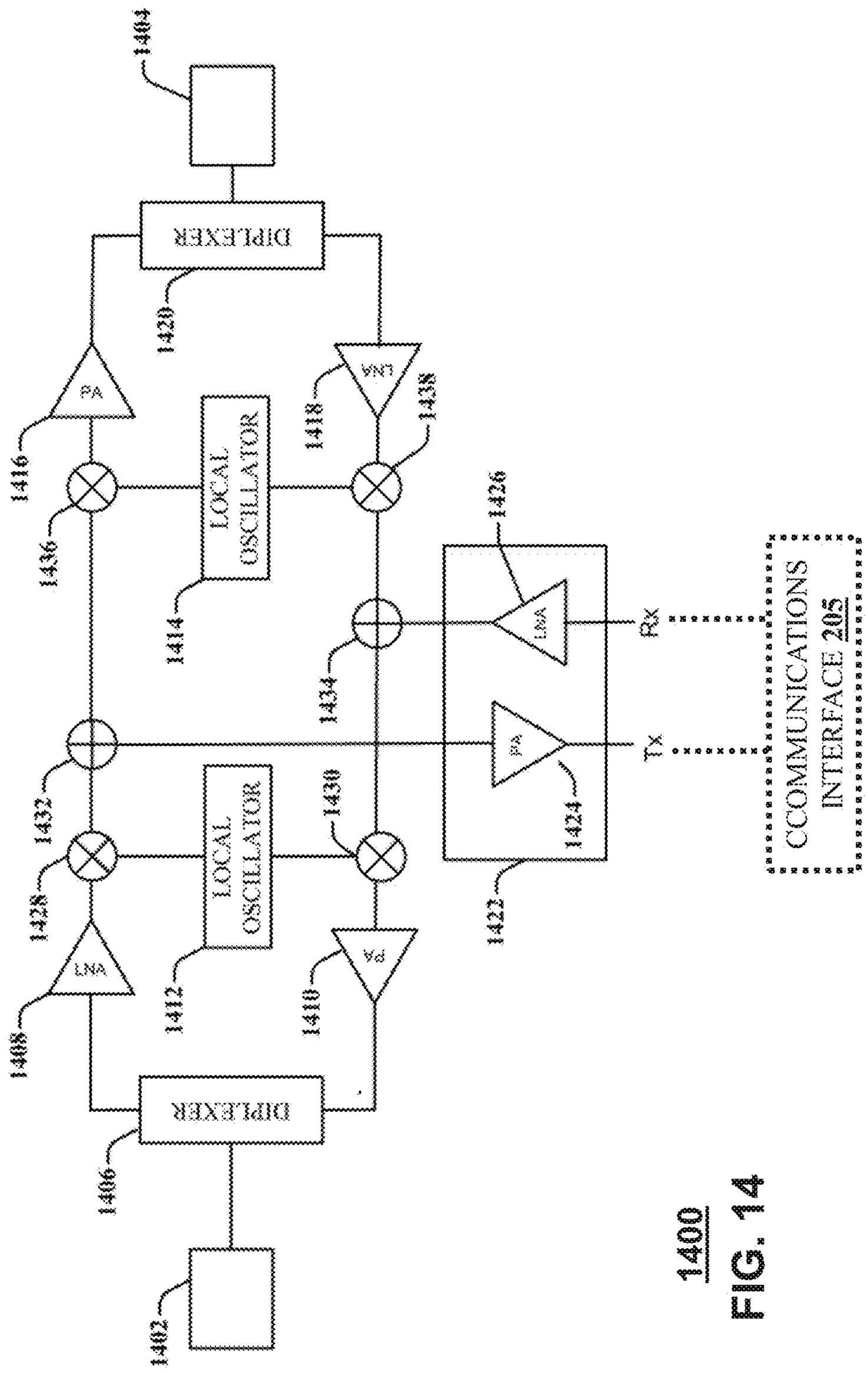
1404
DIPLEXER
1420
PA
1416
LNA
1418
1438
LOCAL OSCILLATOR
1414
1436
1426
LNA
Rx
1434
PA
Tx
1424
1432
1430
LOCAL OSCILLATOR
1412
1428
LNA
1408
PA
1410
1422
DIPLEXER
1406
1402
CCOMMUNICATIONS INTERFACE 205

1400

FIG. 14

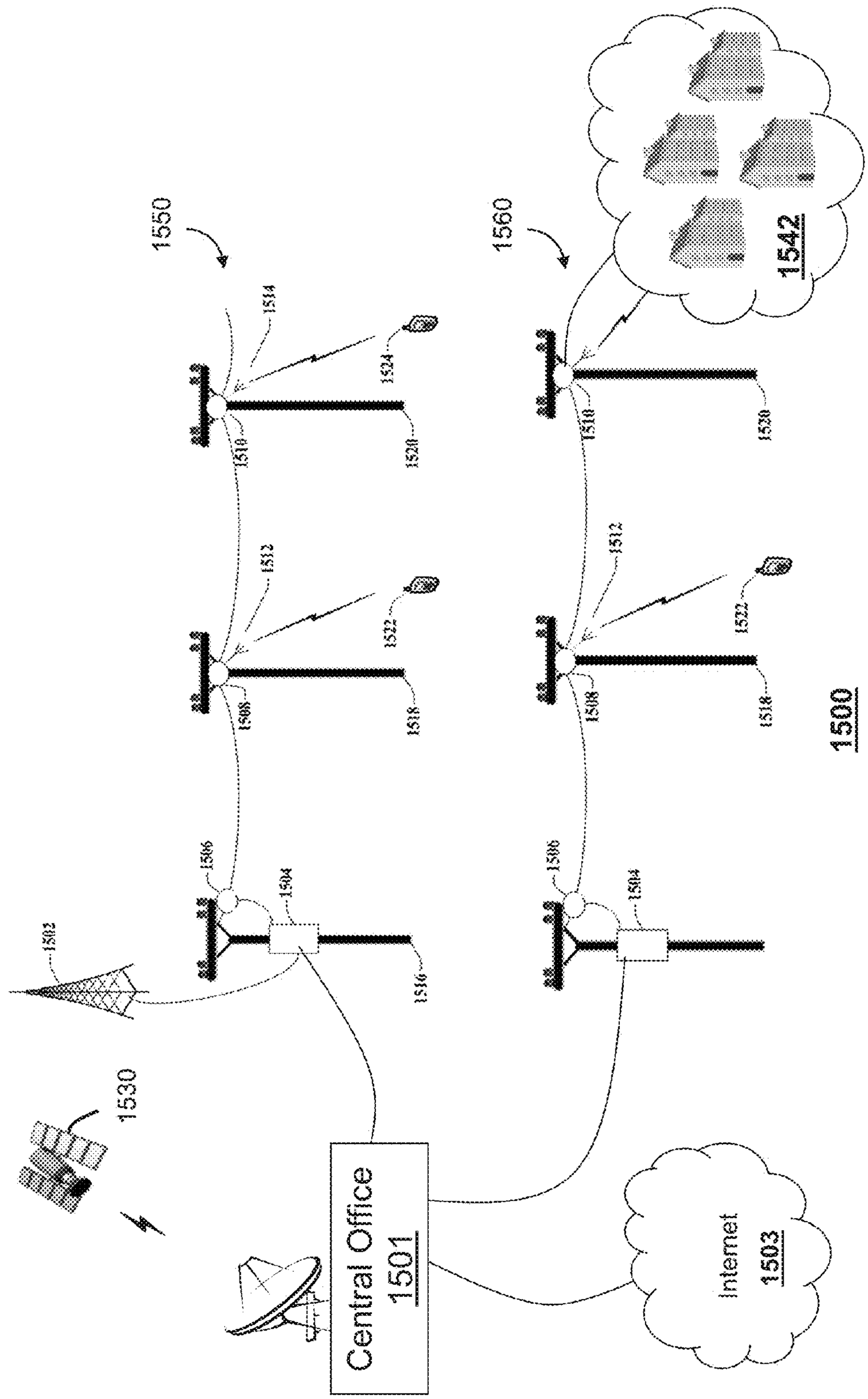
1550
1560
1542
1514
1524
1520
1510
1530
1512
1522
1508
1518
1506
1504
1502
1516
1530
Central Office
1501
Internet
1503

1500

FIG. 15

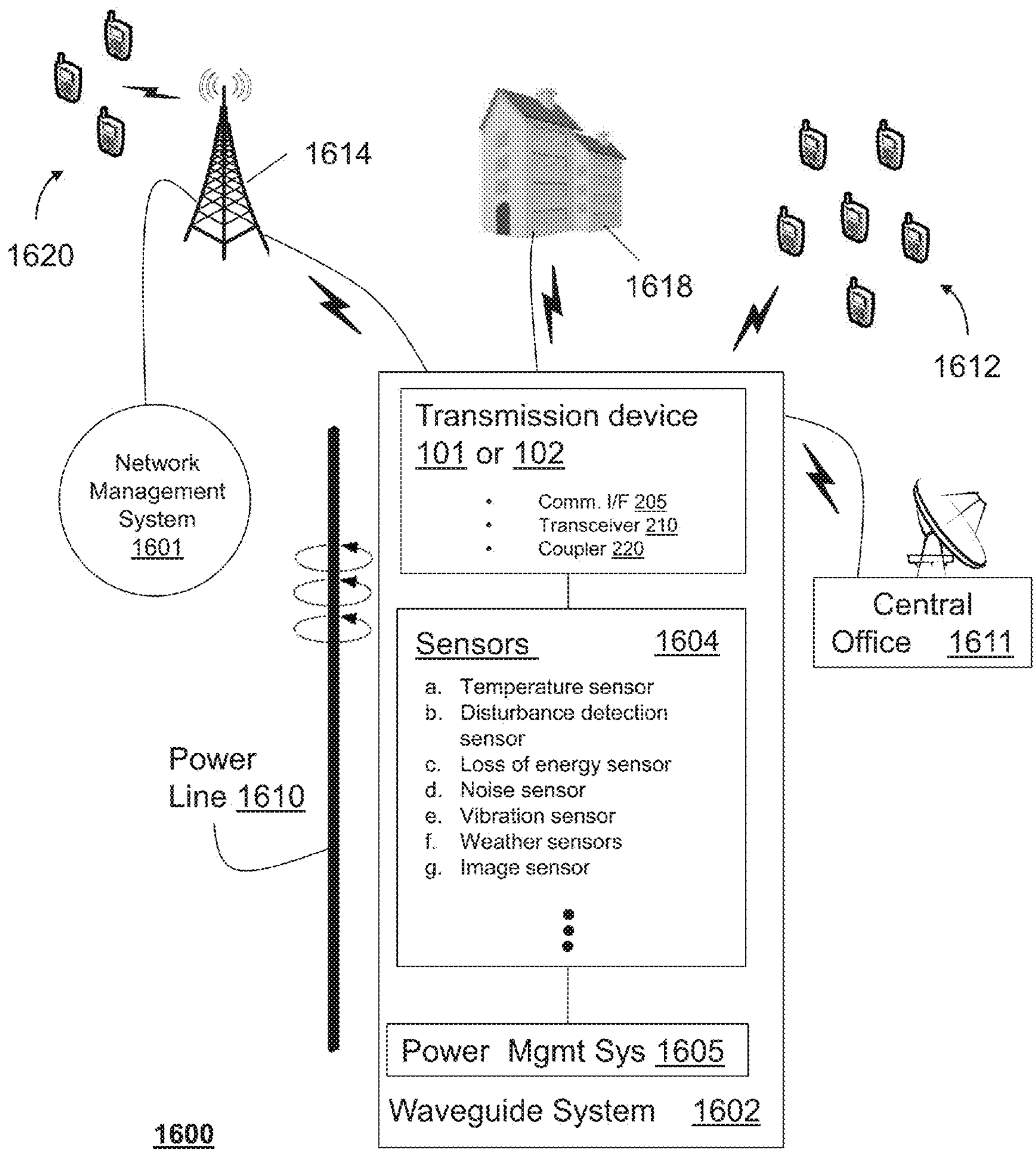
1614
1620
1618
1612
Network Management System 1601
Transmission device 101 or 102
Comm. I/F 205
Transceiver 210
Coupler 220
Central Office 1611
Sensors 1604
a. Temperature sensor
b. Disturbance detection sensor
c. Loss of energy sensor
d. Noise sensor
e. Vibration sensor
f. Weather sensors
g. Image sensor
Power Line 1610
Power Mgmt Sys 1605
Waveguide System 1602
1600

FIG. 16A

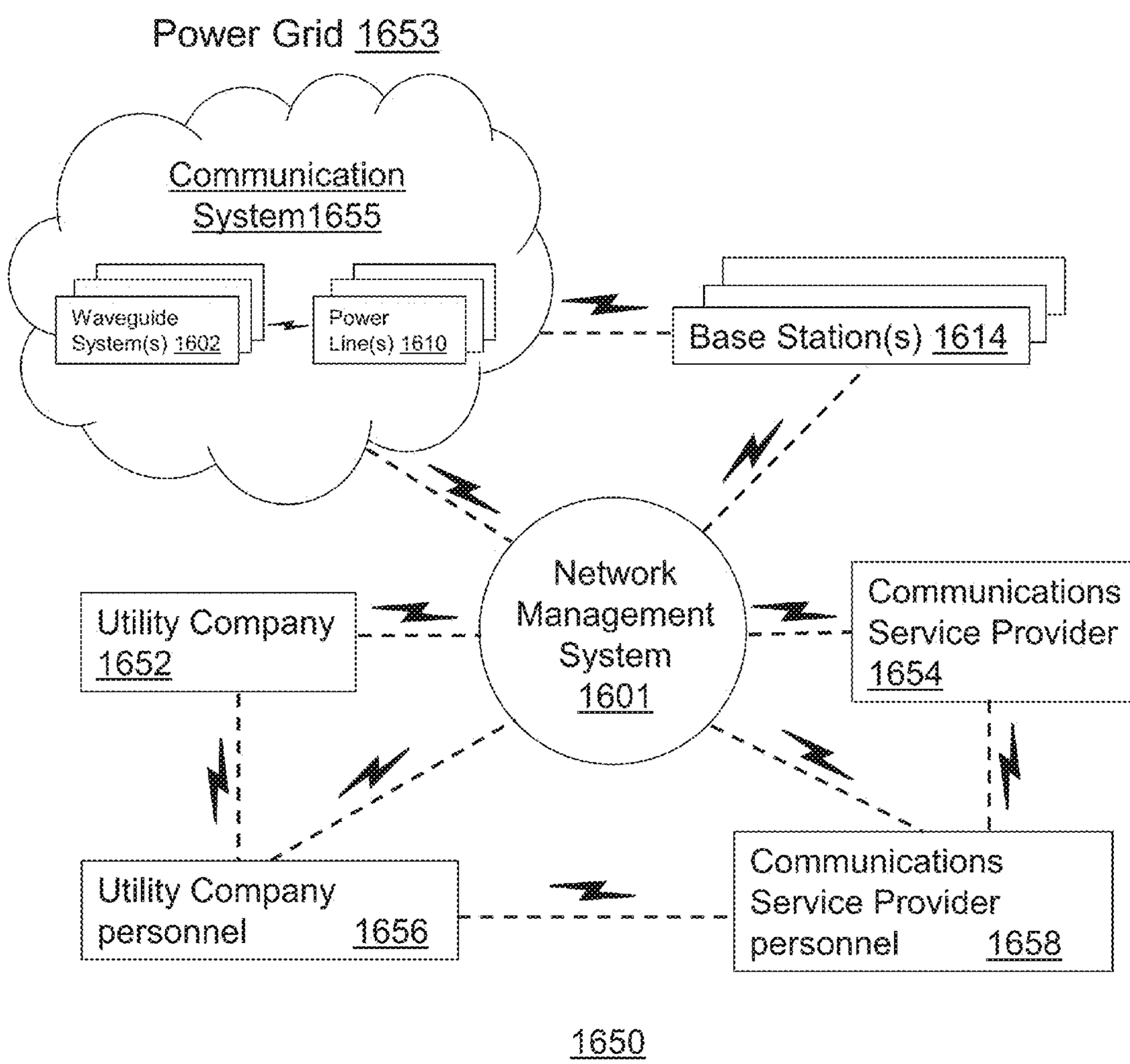
Power Grid 1653
Communication System1655
Waveguide System(s) 1602
Power Line(s) 1610
Base Station(s) 1614
Network Management System 1601
Utility Company 1652
Communications Service Provider 1654
Utility Company personnel 1656
Communications Service Provider personnel 1658
1650

FIG. 16B

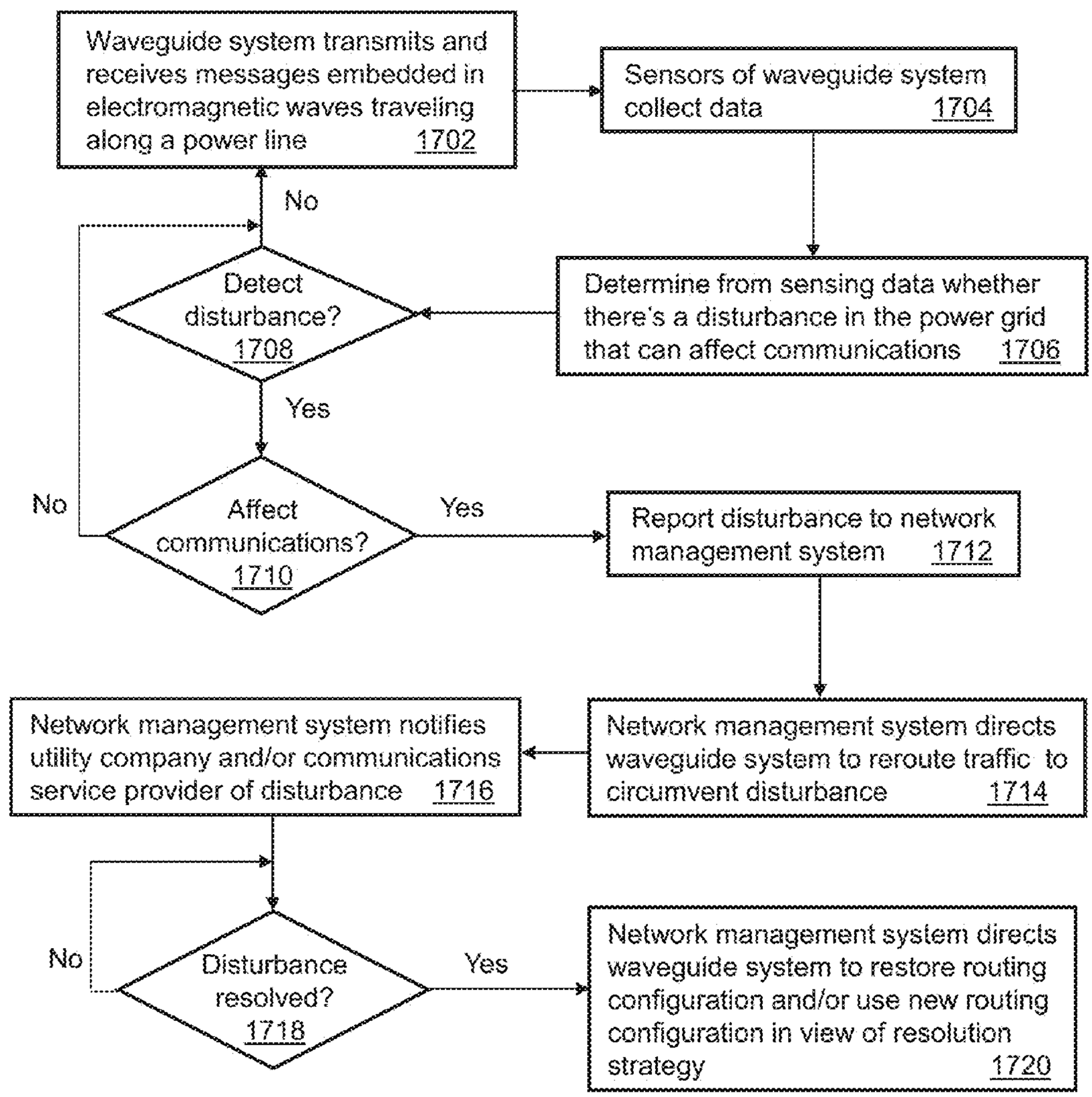
Waveguide system transmits and receives messages embedded in electromagnetic waves traveling along a power line 1702
Sensors of waveguide system collect data 1704
Determine from sensing data whether there's a disturbance in the power grid that can affect communications 1706
Detect disturbance? 1708
No
Yes
Affect communications? 1710
No
Yes
Report disturbance to network management system 1712
Network management system directs waveguide system to reroute traffic to circumvent disturbance 1714
Network management system notifies utility company and/or communications service provider of disturbance 1716
Disturbance resolved? 1718
No
Yes
Network management system directs waveguide system to restore routing configuration and/or use new routing configuration in view of resolution strategy 1720

1700

FIG. 17A

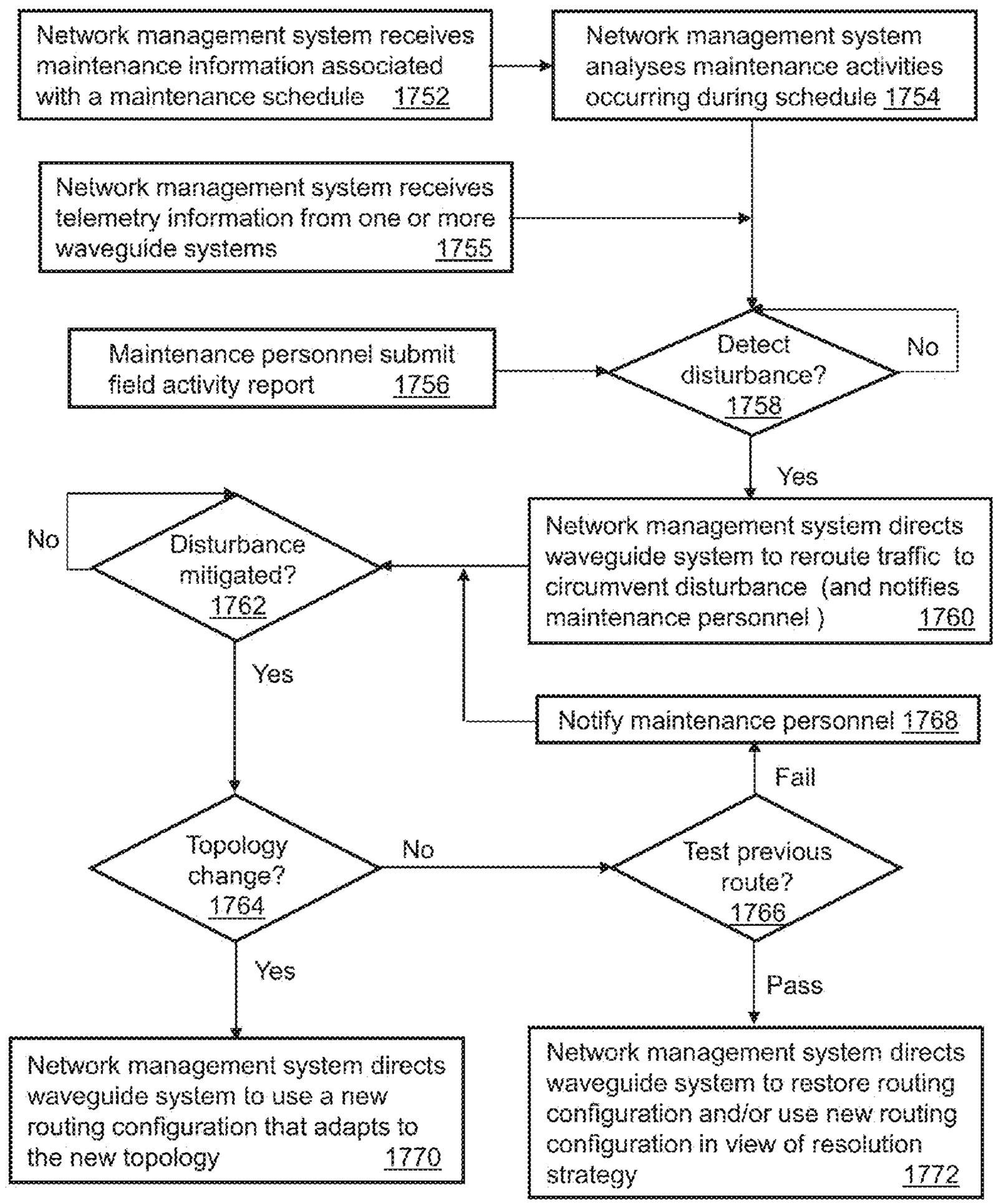
Network management system receives maintenance information associated with a maintenance schedule 1752
Network management system analyses maintenance activities occurring during schedule 1754
Network management system receives telemetry information from one or more waveguide systems 1755
Maintenance personnel submit field activity report 1756
Detect disturbance? 1758
No
Yes
Network management system directs waveguide system to reroute traffic to circumvent disturbance (and notifies maintenance personnel) 1760
No
Disturbance mitigated? 1762
Yes
Notify maintenance personnel 1768
Fail
Topology change? 1764
No
Test previous route? 1766
Yes
Pass
Network management system directs waveguide system to use a new routing configuration that adapts to the new topology 1770
Network management system directs waveguide system to restore routing configuration and/or use new routing configuration in view of resolution strategy 1772

1750

FIG. 17B

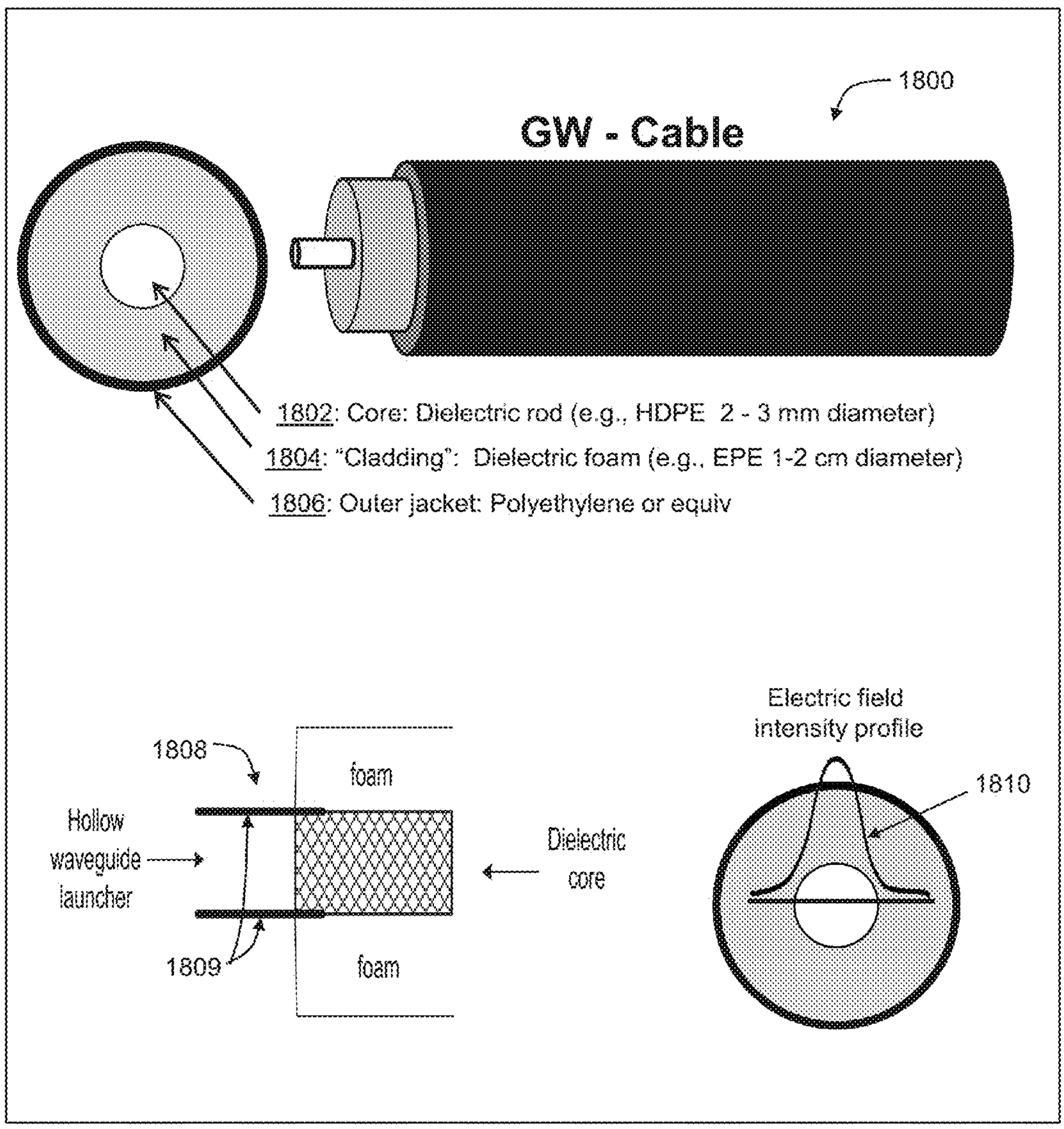
1800
GW - Cable
1802: Core: Dielectric rod (e.g., HDPE 2 - 3 mm diameter)
1804: "Cladding": Dielectric foam (e.g., EPE 1-2 cm diameter)
1806: Outer jacket: Polyethylene or equiv
1808
foam
Hollow waveguide launcher
Dielectric core
1809
foam
Electric field intensity profile
1810

FIG. 18A

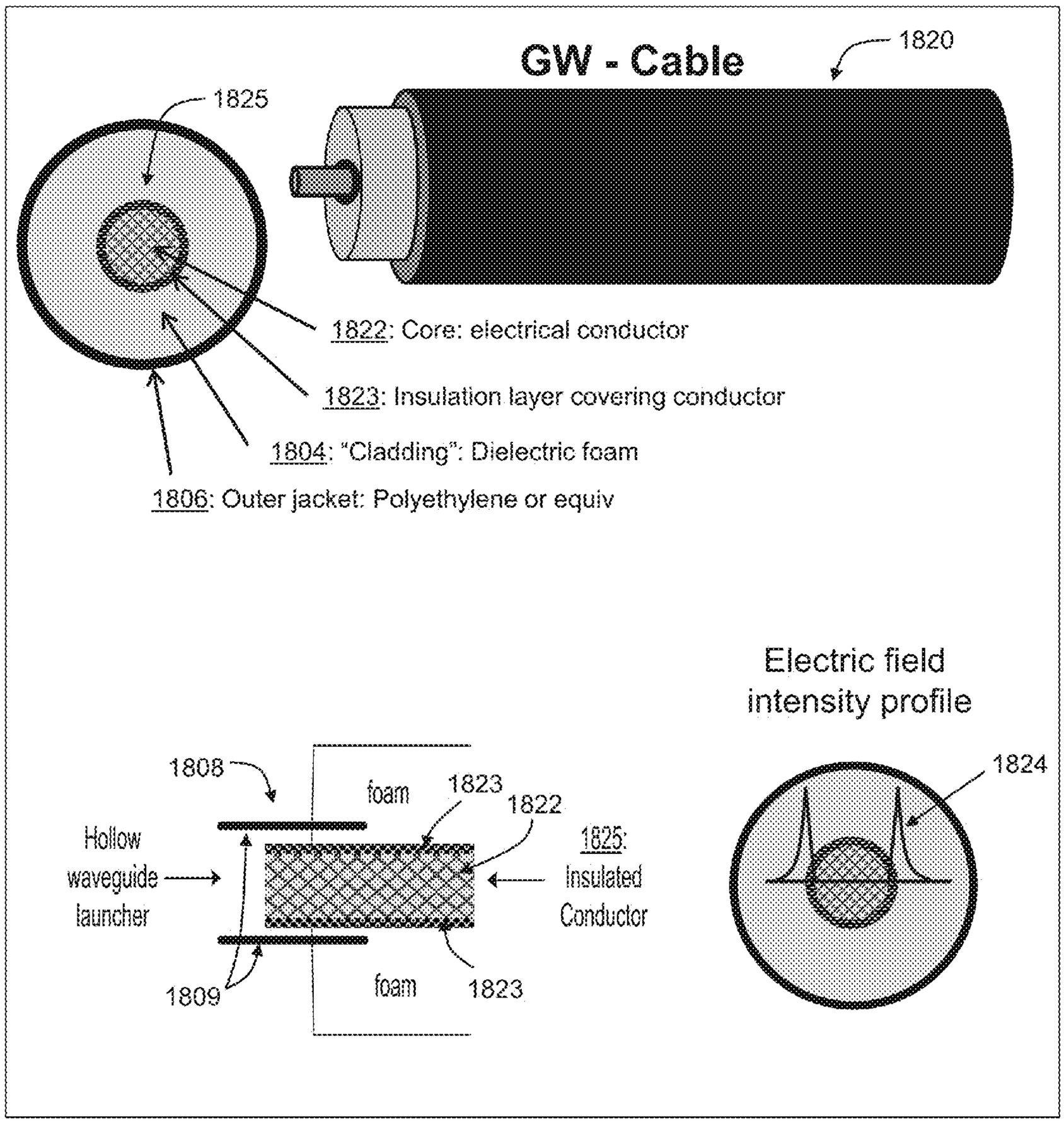
GW - Cable
1820
1825
1822: Core: electrical conductor
1823: Insulation layer covering conductor
1804: "Cladding": Dielectric foam
1806: Outer jacket: Polyethylene or equiv
Electric field intensity profile
1824
1808
foam
1823
1822
Hollow waveguide launcher
1825: Insulated Conductor
1809
foam
1823

FIG. 18B

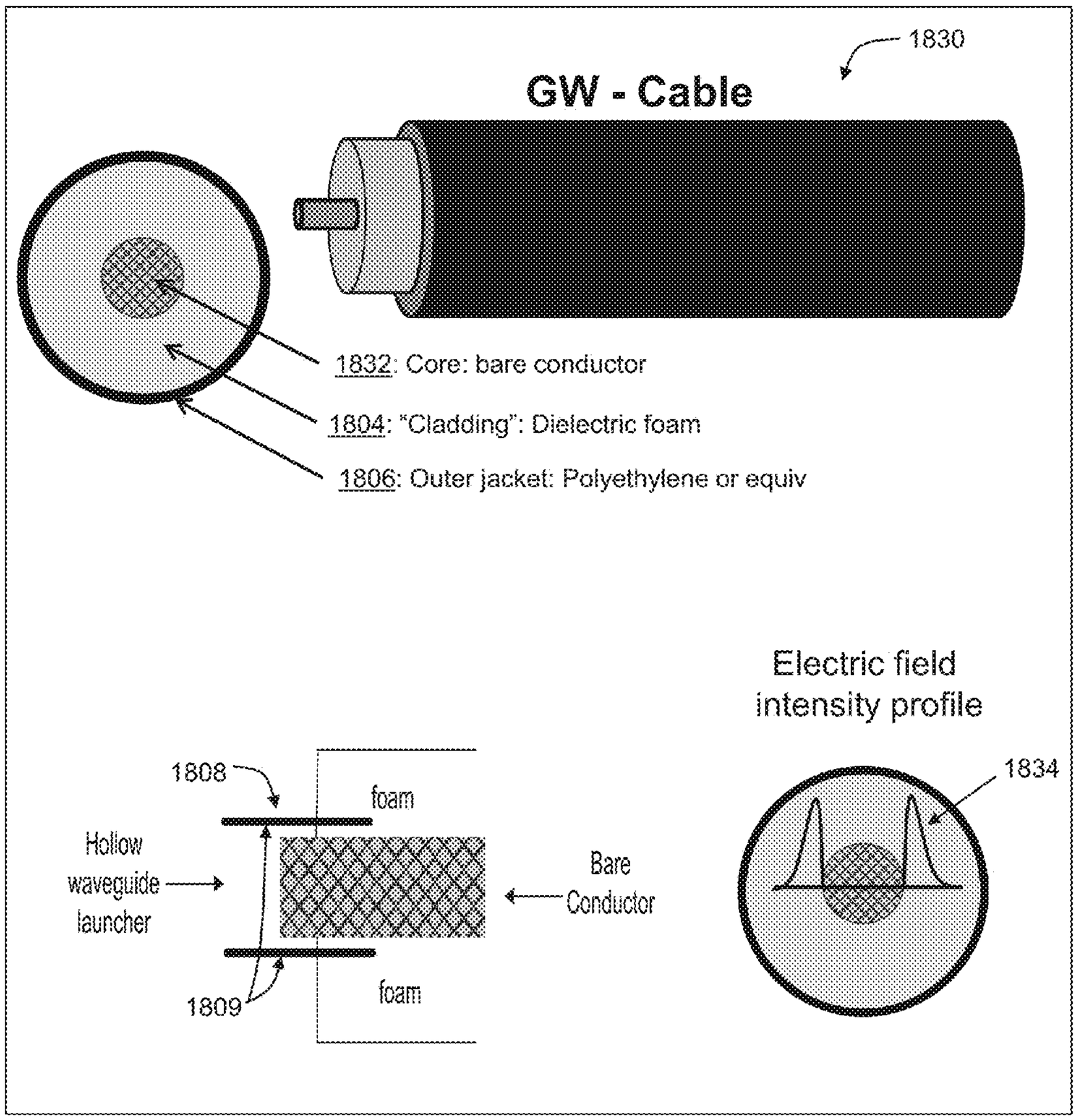
1830
GW - Cable
1832: Core: bare conductor
1804: "Cladding": Dielectric foam
1806: Outer jacket: Polyethylene or equiv
Electric field intensity profile
1834
1808
foam
Hollow waveguide launcher
Bare Conductor
1809
foam

FIG. 18C

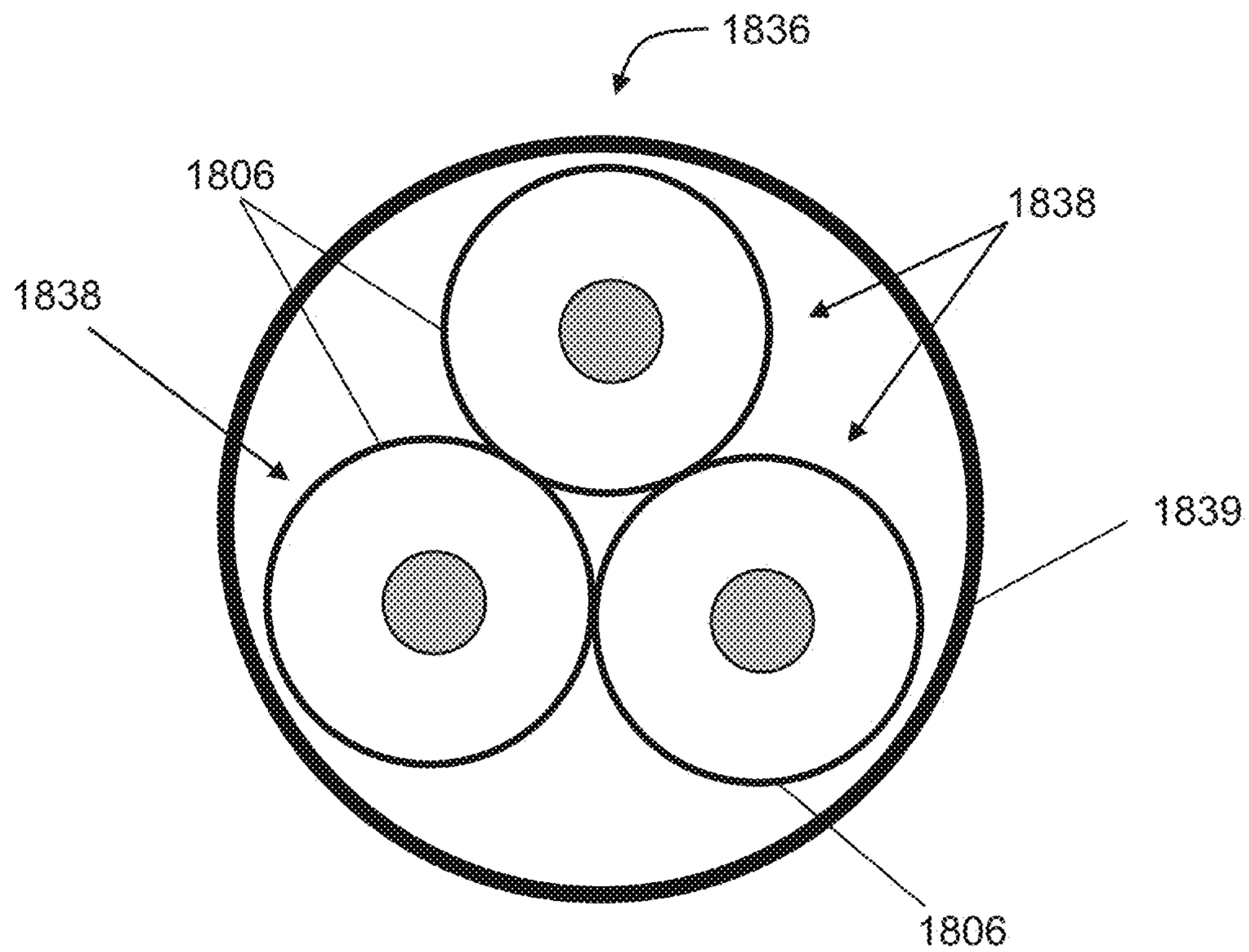

FIG. 18D

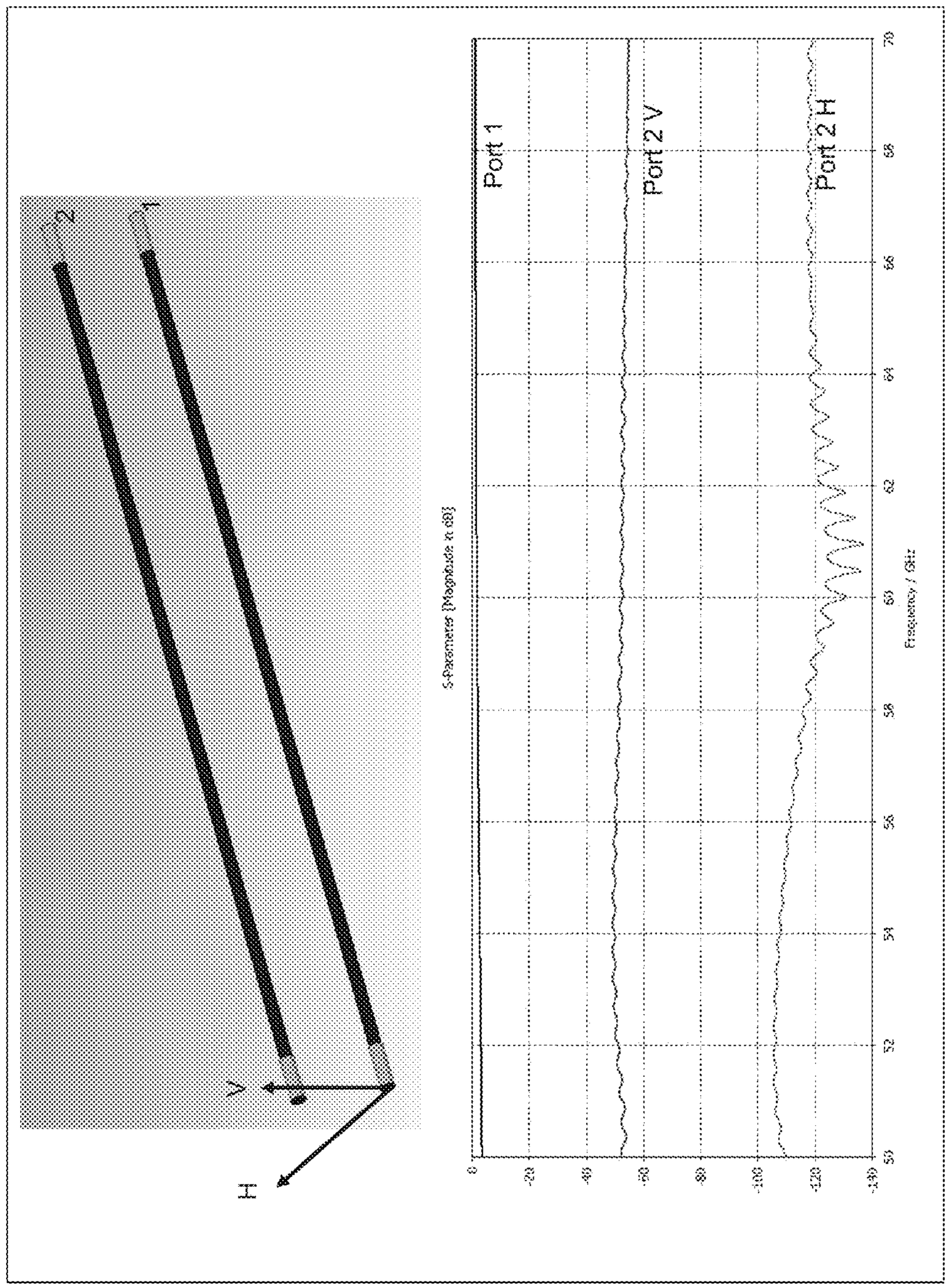
H
V
P2
P1
S-Parameters [Magnitude in dB]
0
-20
-40
-60
-80
-100
-120
-140
50
52
54
56
58
60
62
64
66
68
70
Frequency / GHz
Port 1
Port 2 V
Port 2 H

FIG. 18E

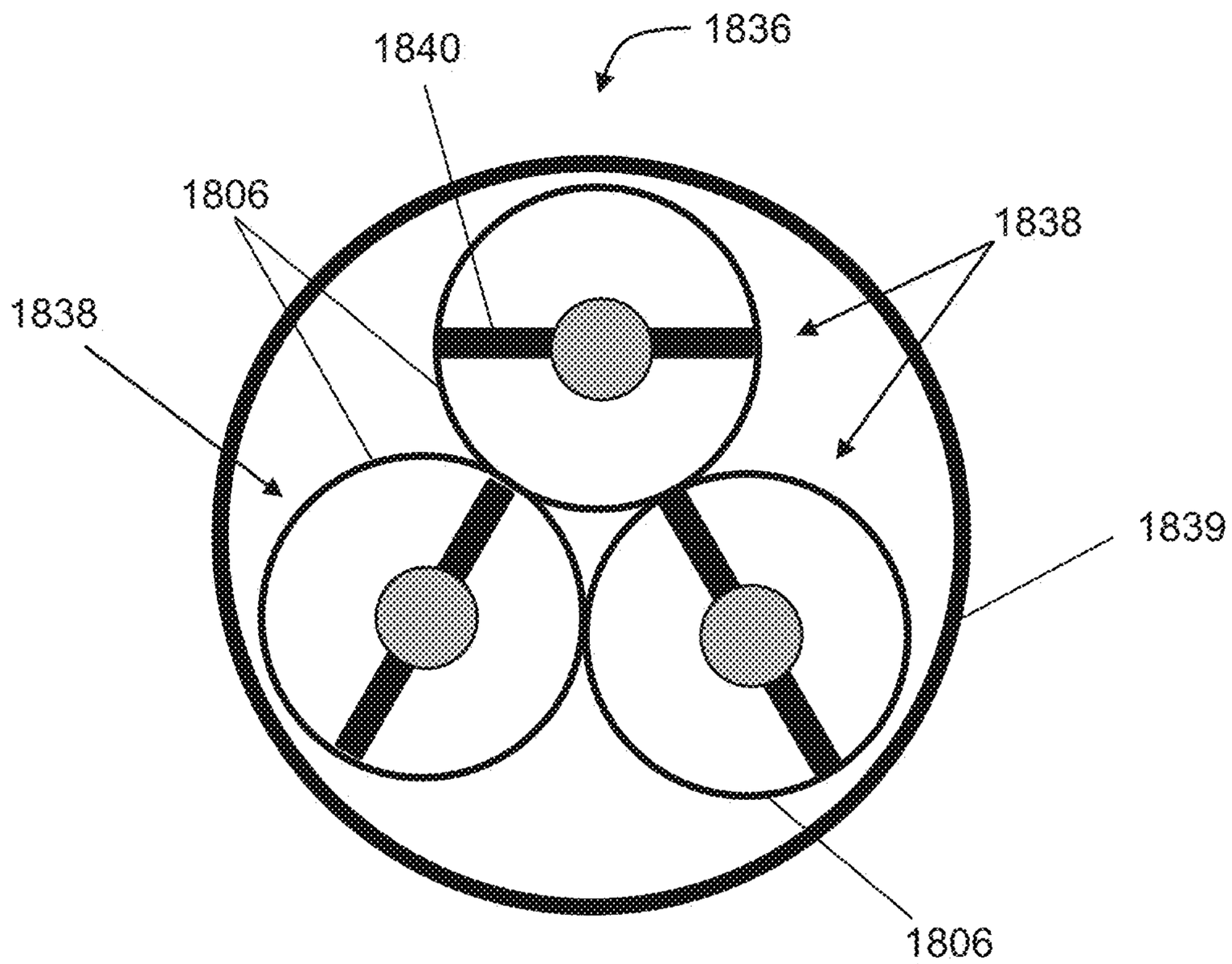

FIG. 18F

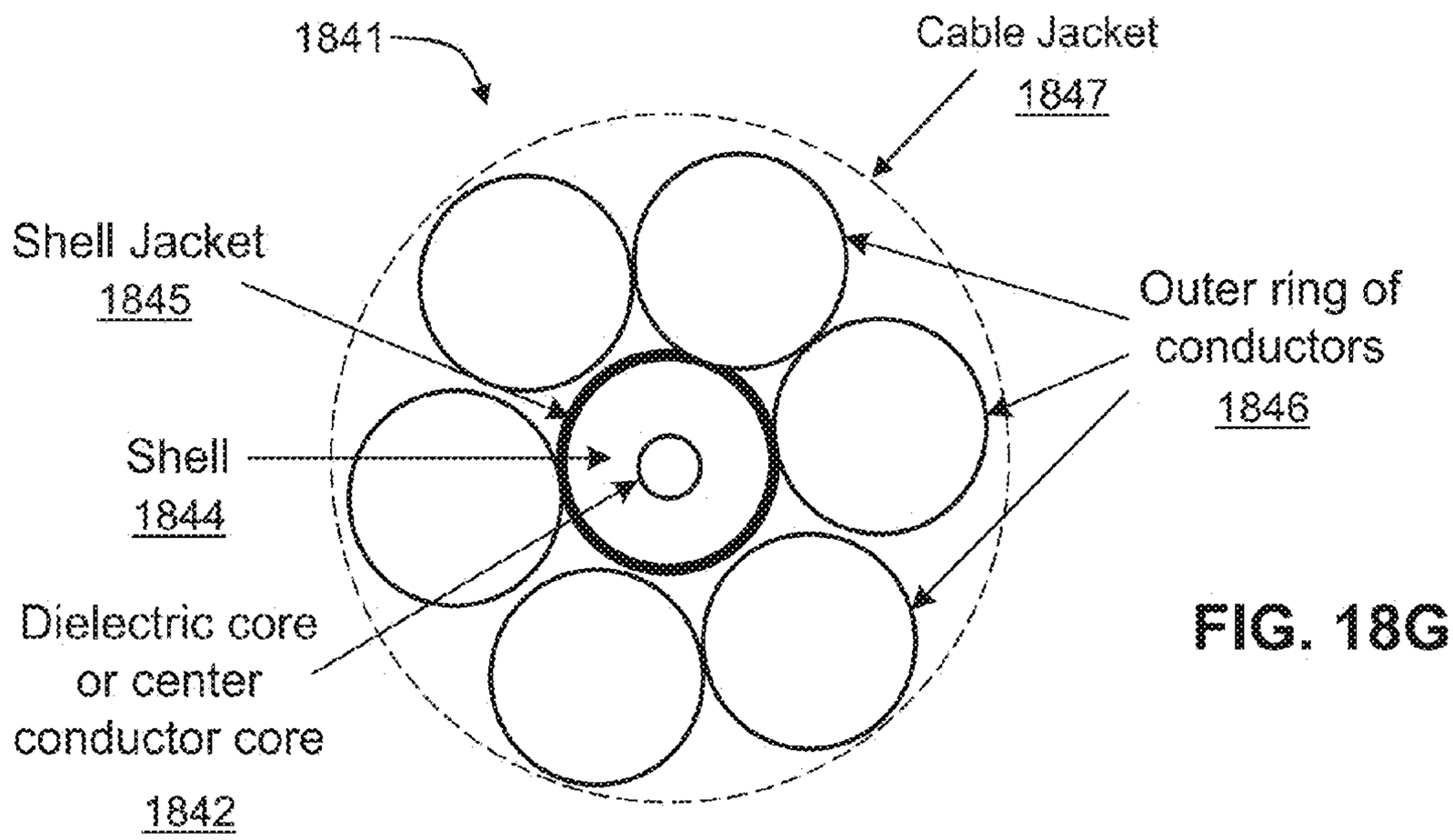

FIG. 18G

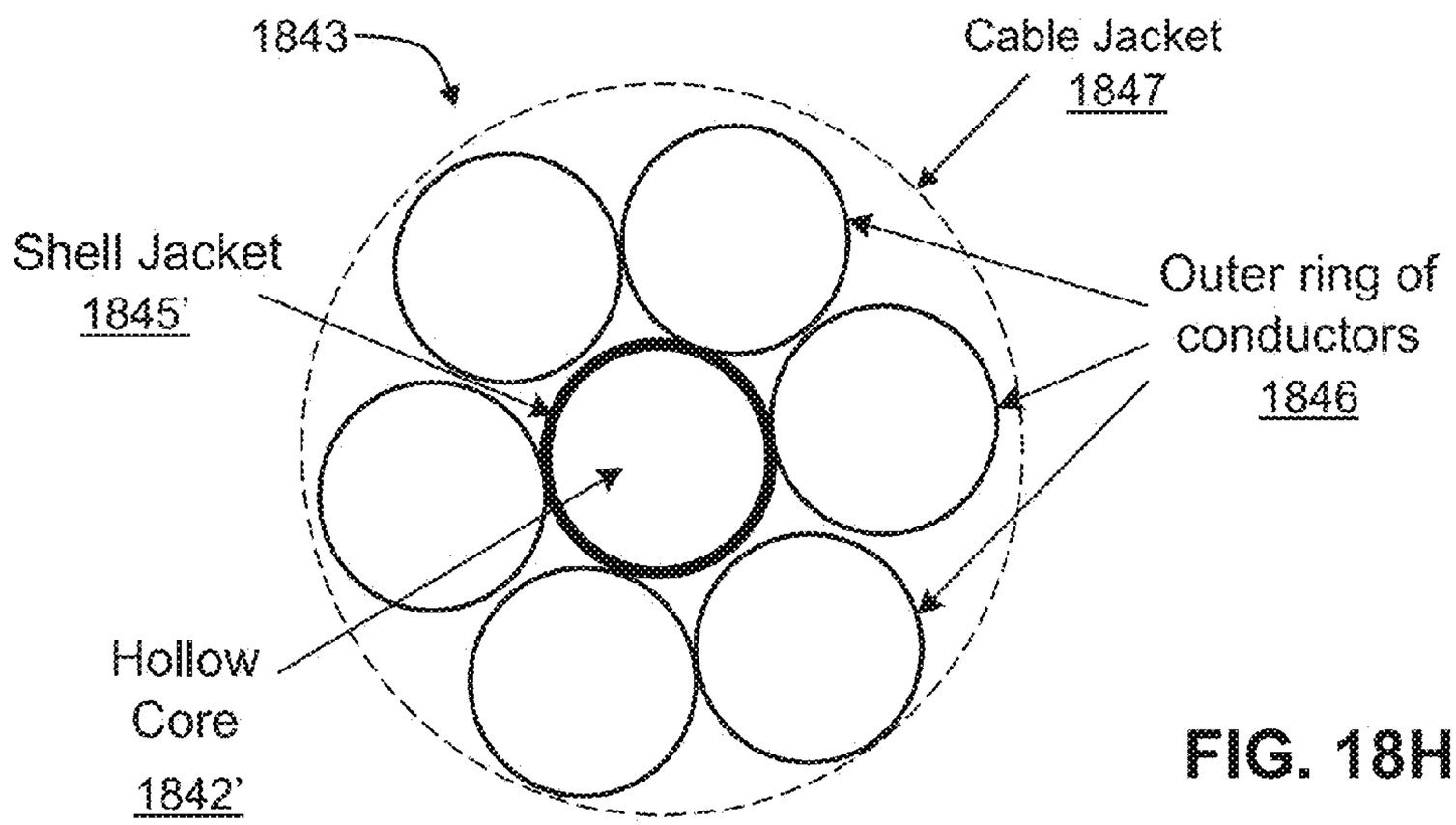

FIG. 18H

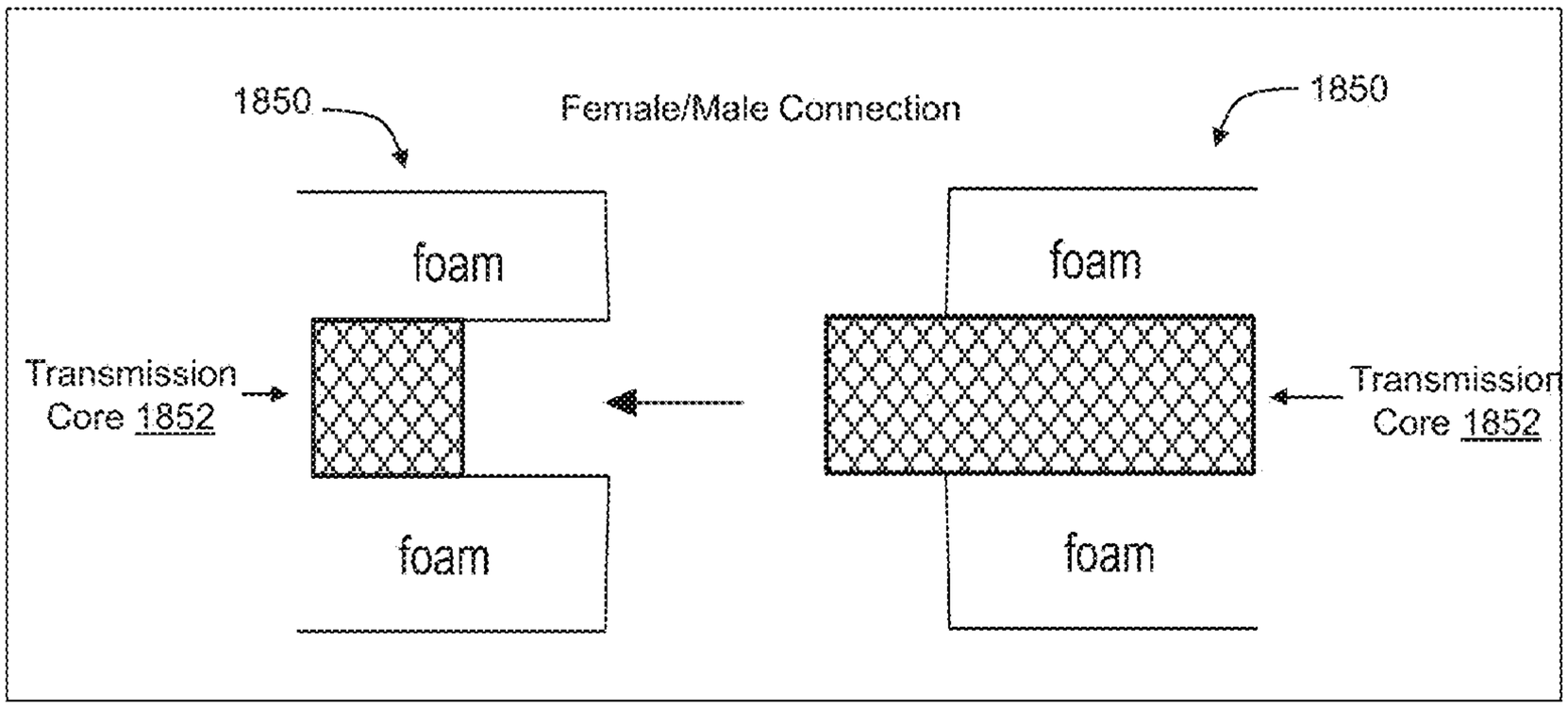

FIG. 18I

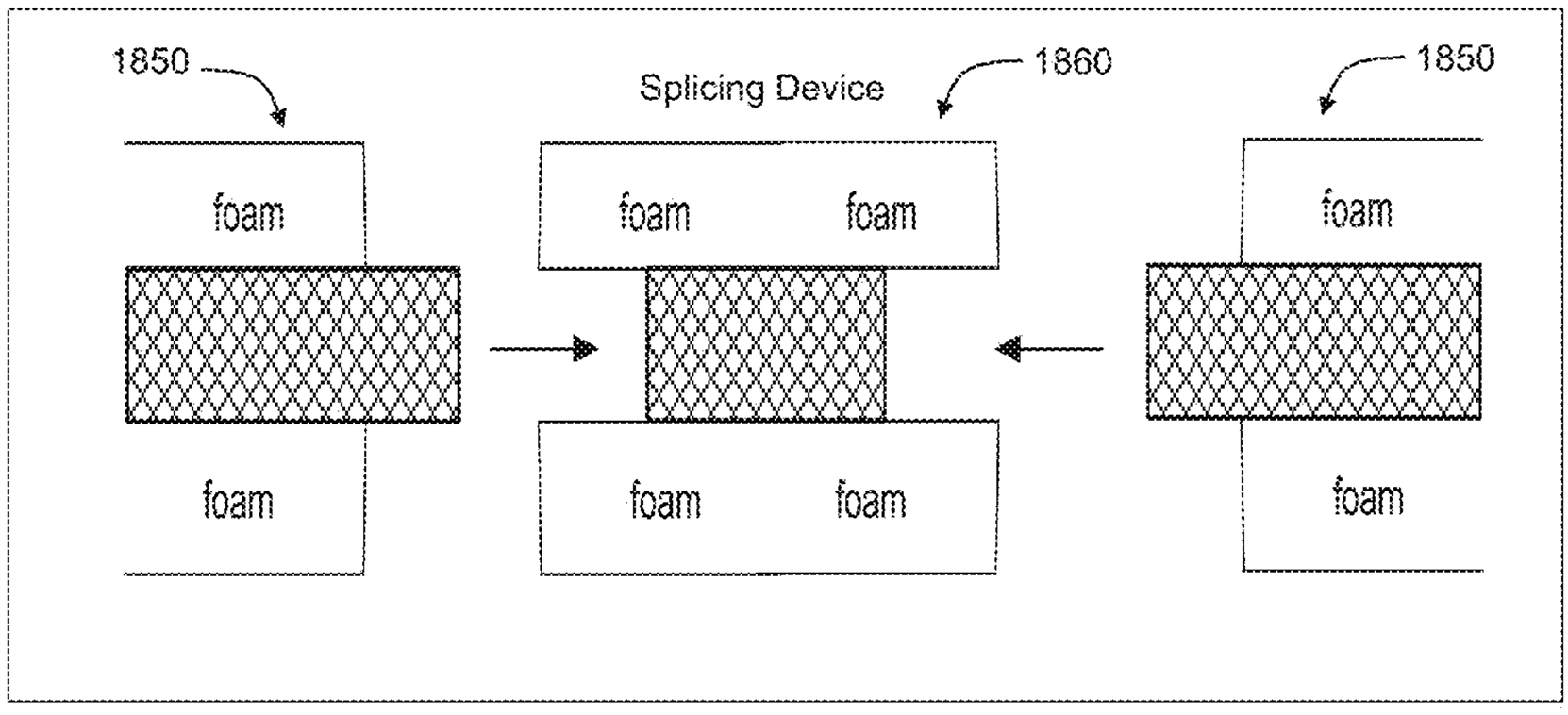

FIG. 18J

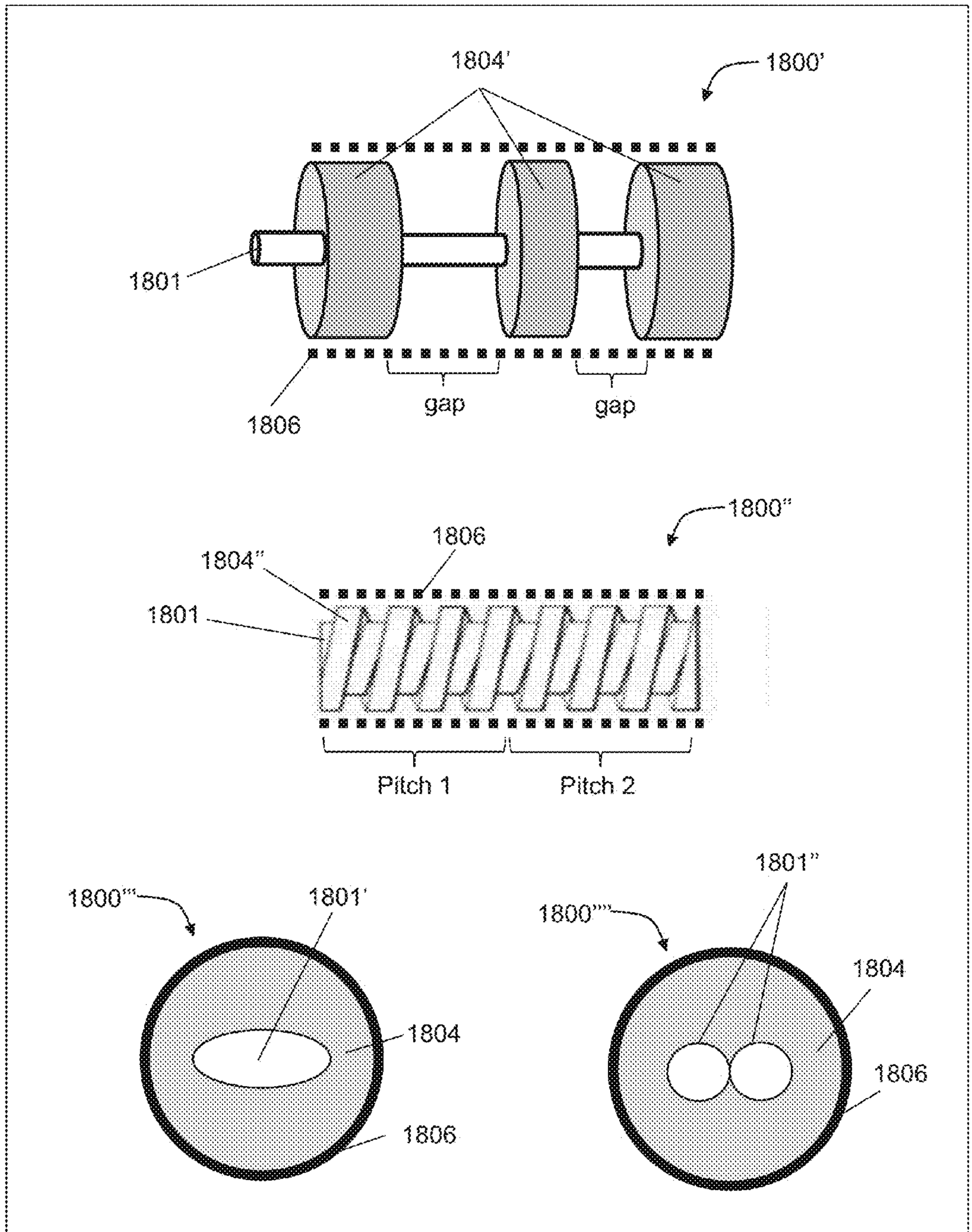
1804'
1800'
1801
1806
gap
gap
1800"
1806
1804"
1801
Pitch 1
Pitch 2
1801"
1800'''
1801'
1800''''
1804
1804
1806
1806

FIG. 18K

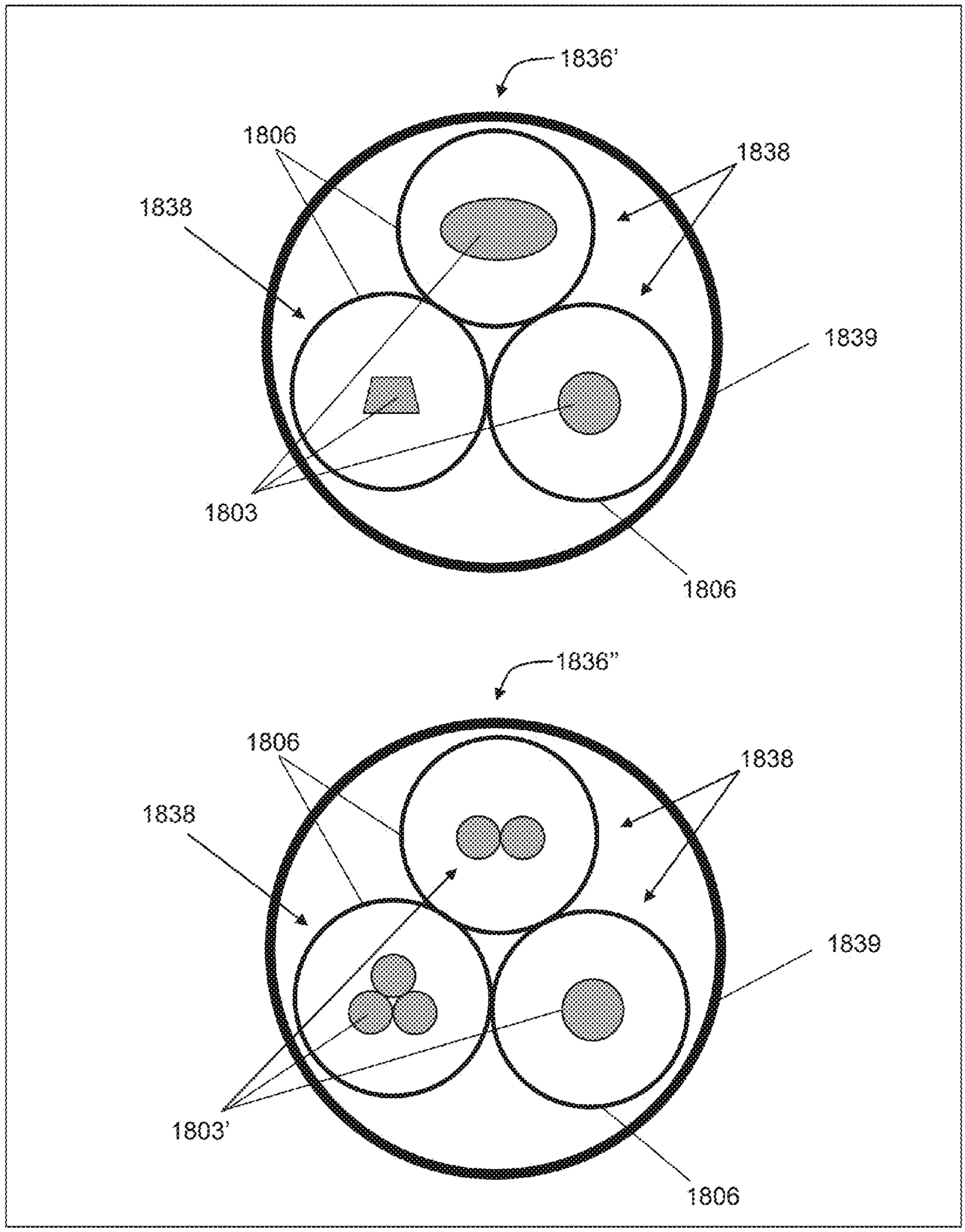
1836'
1806
1838
1838
1839
1803
1806
1836"
1806
1838
1838
1839
1803'
1806

FIG. 18L

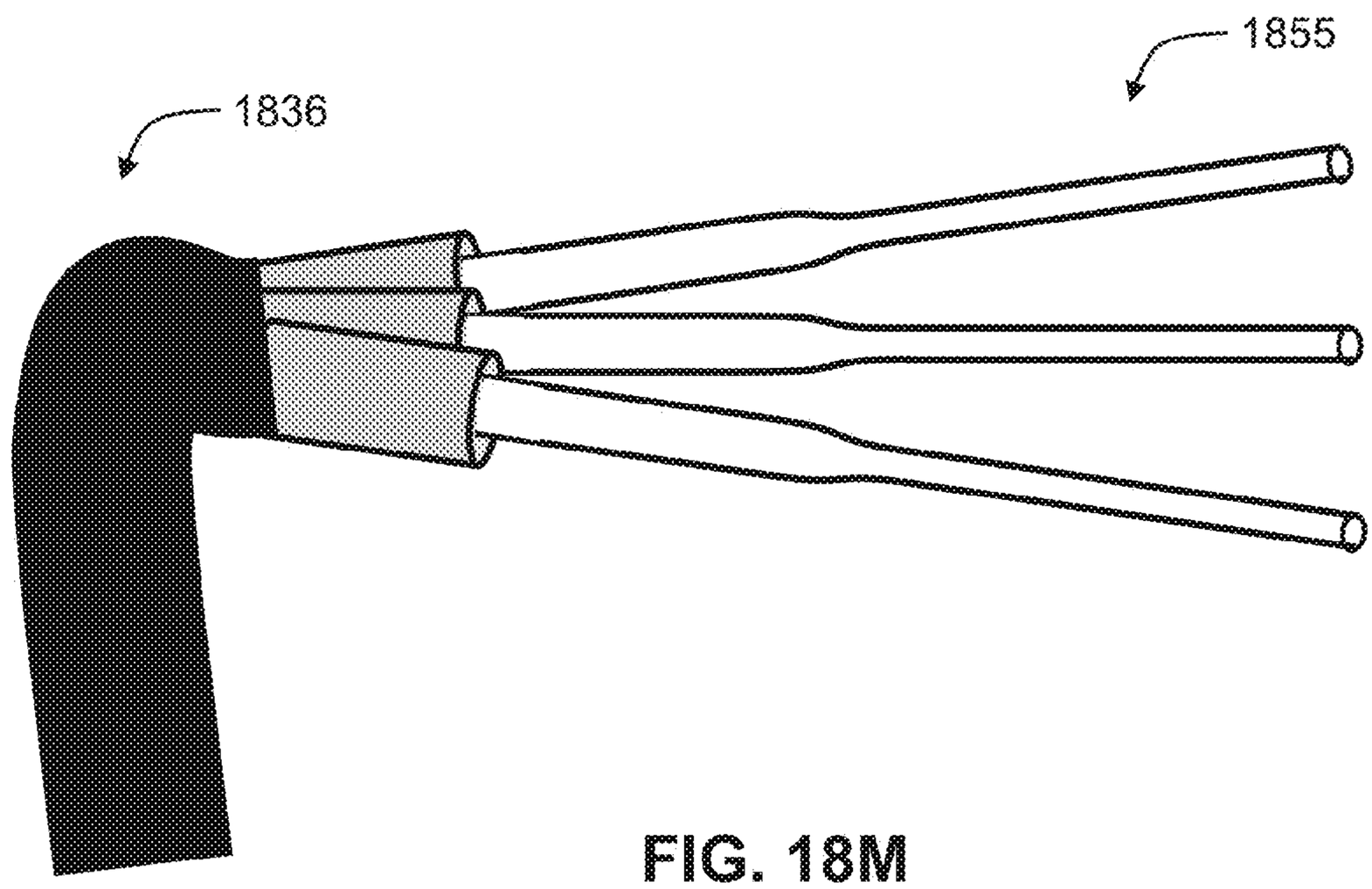

FIG. 18M

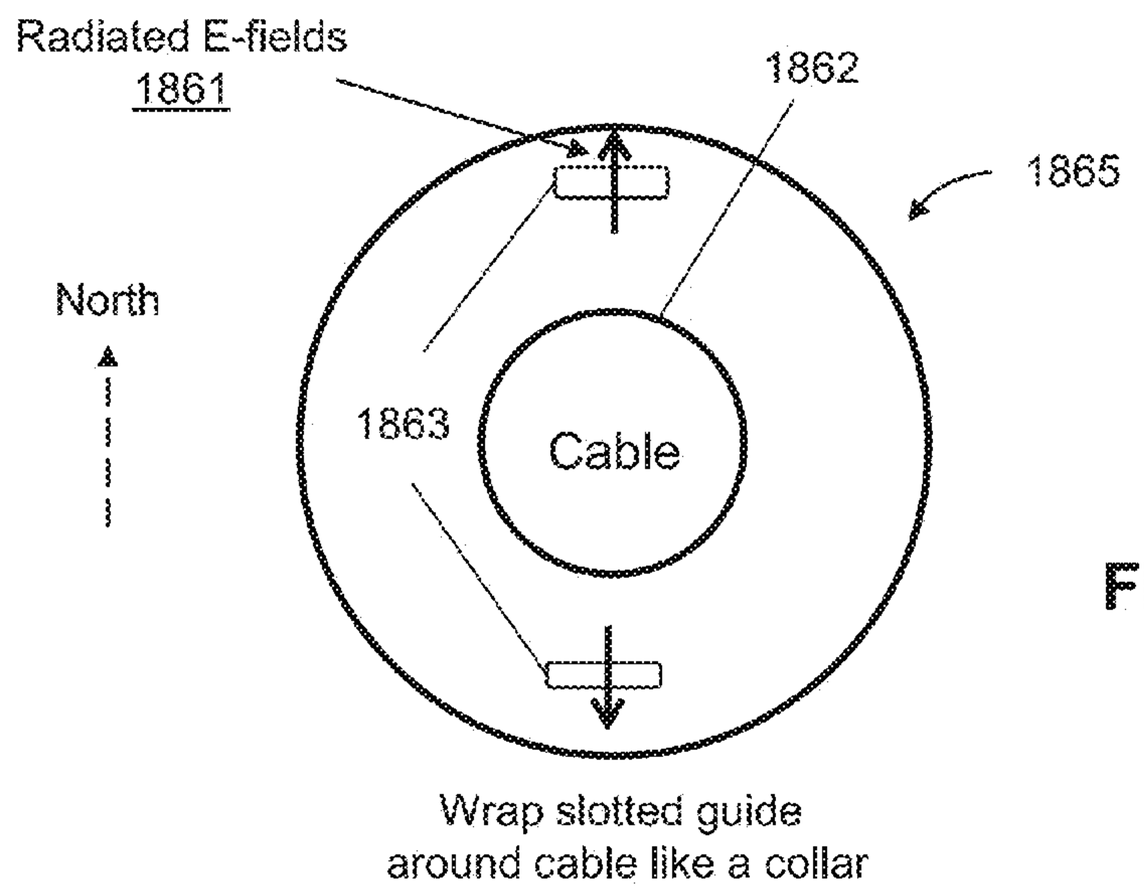

FIG. 18N

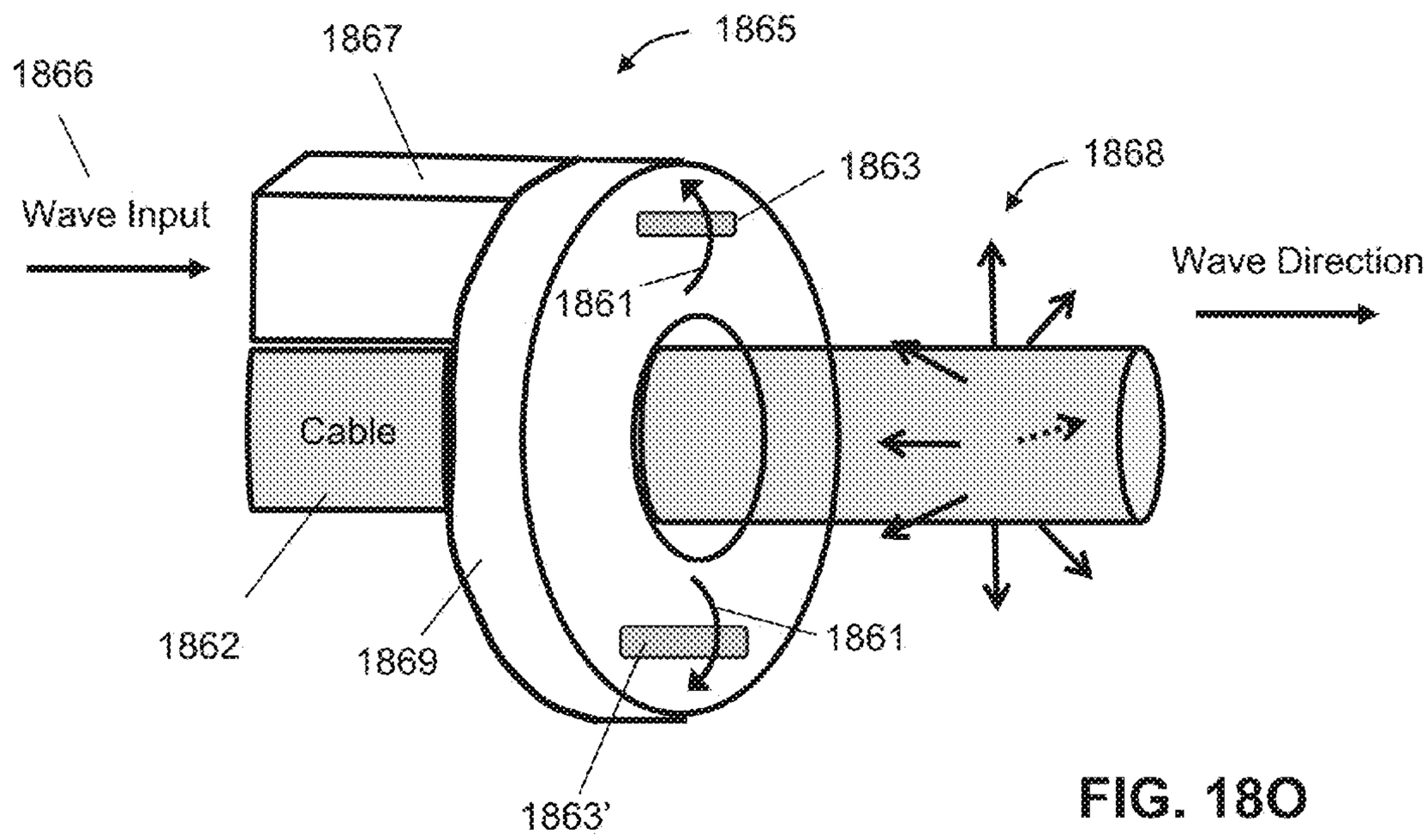

FIG. 18O

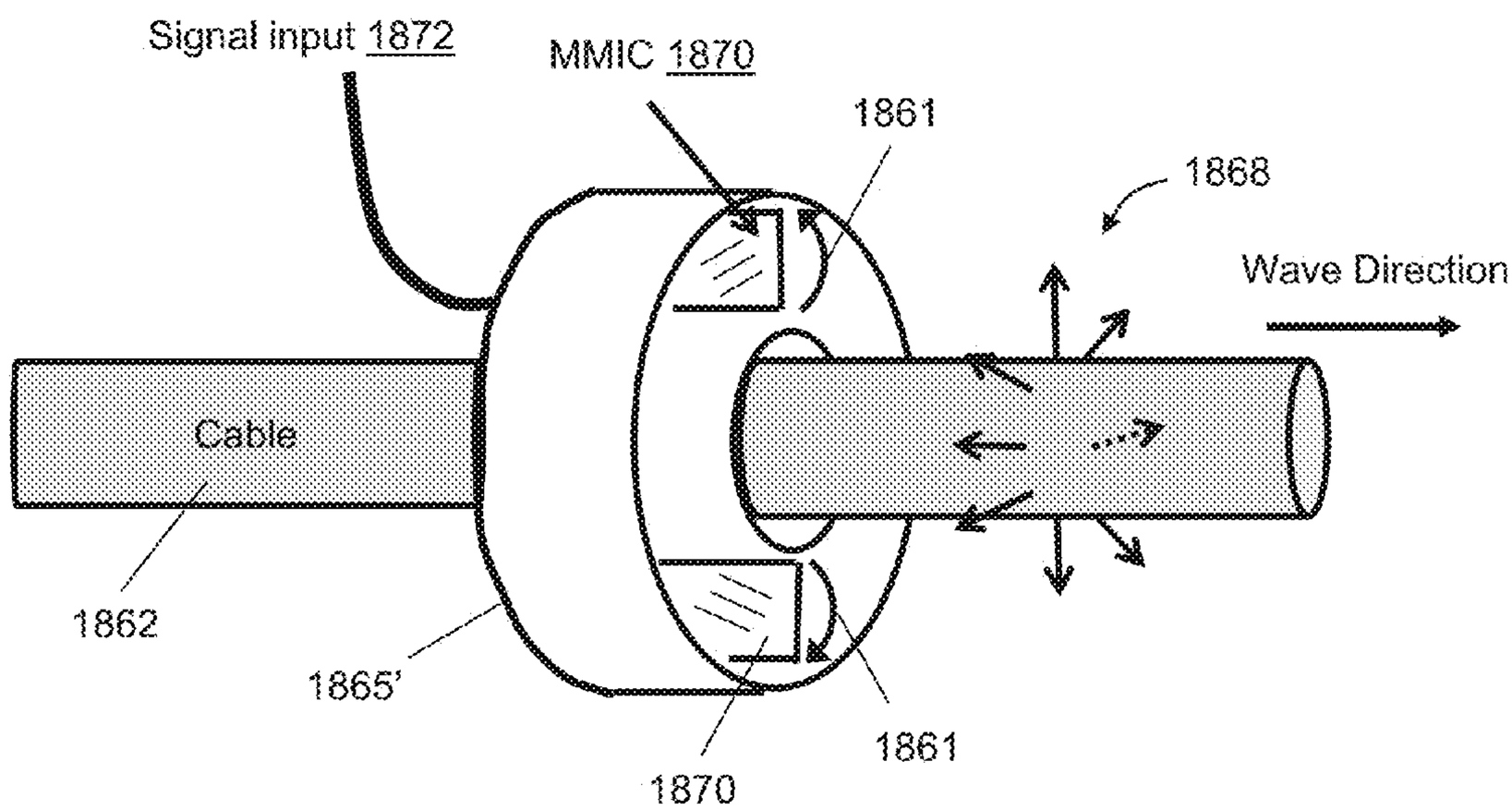
Signal input 1872
MMIC 1870
1861
1868
Wave Direction
Cable
1862
1865'
1870
1861

FIG. 18P

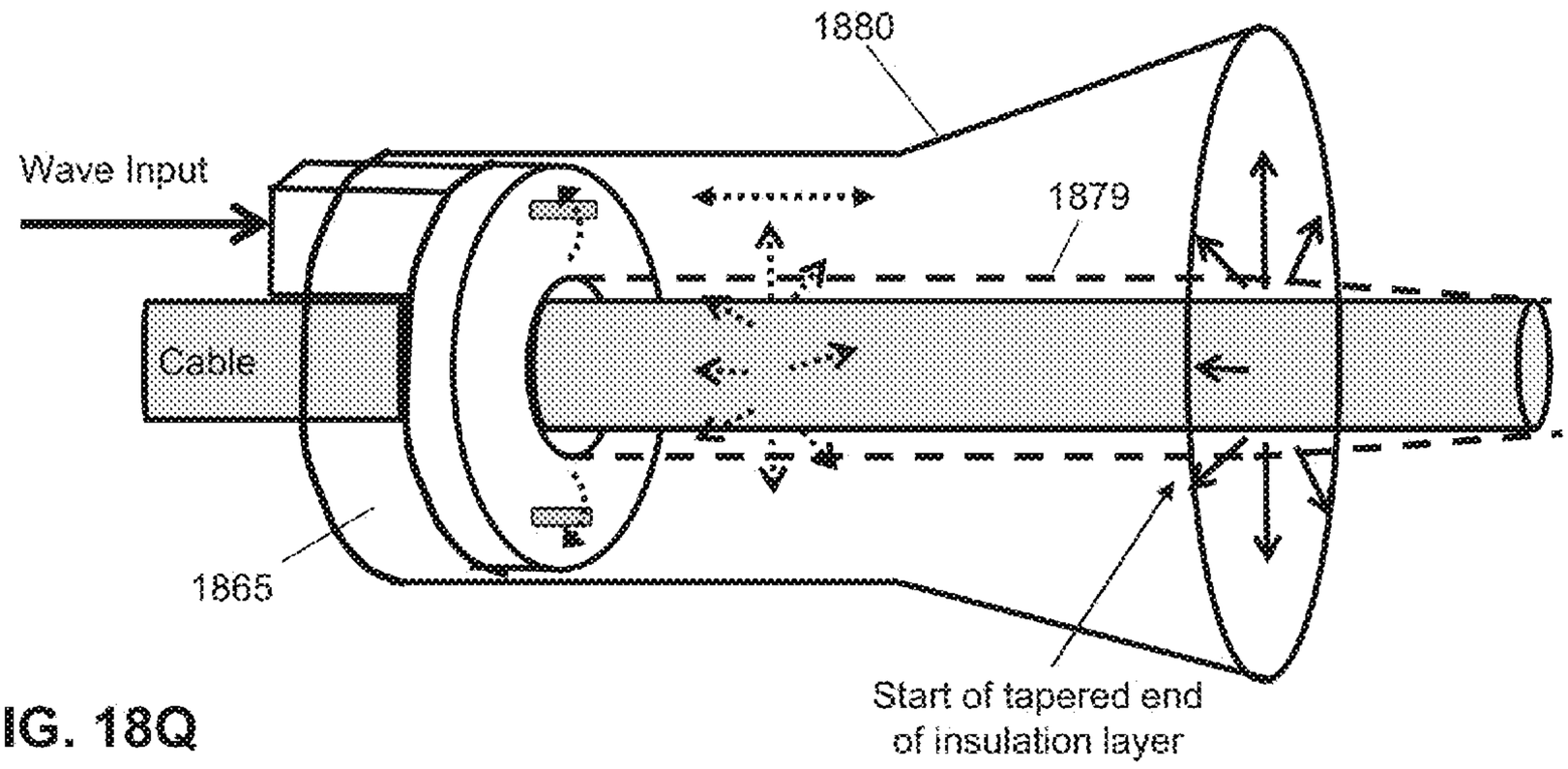

FIG. 18Q

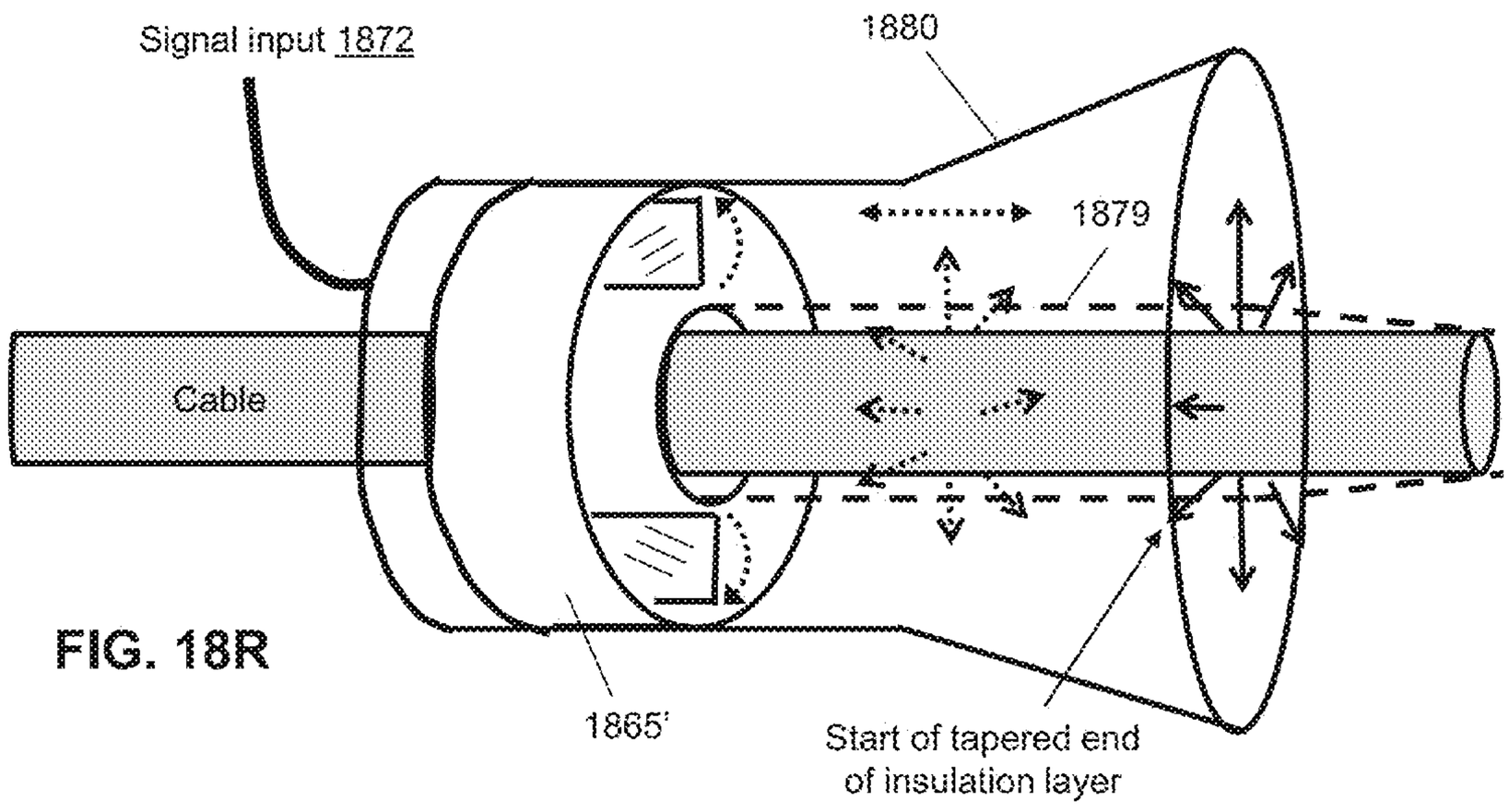

FIG. 18R

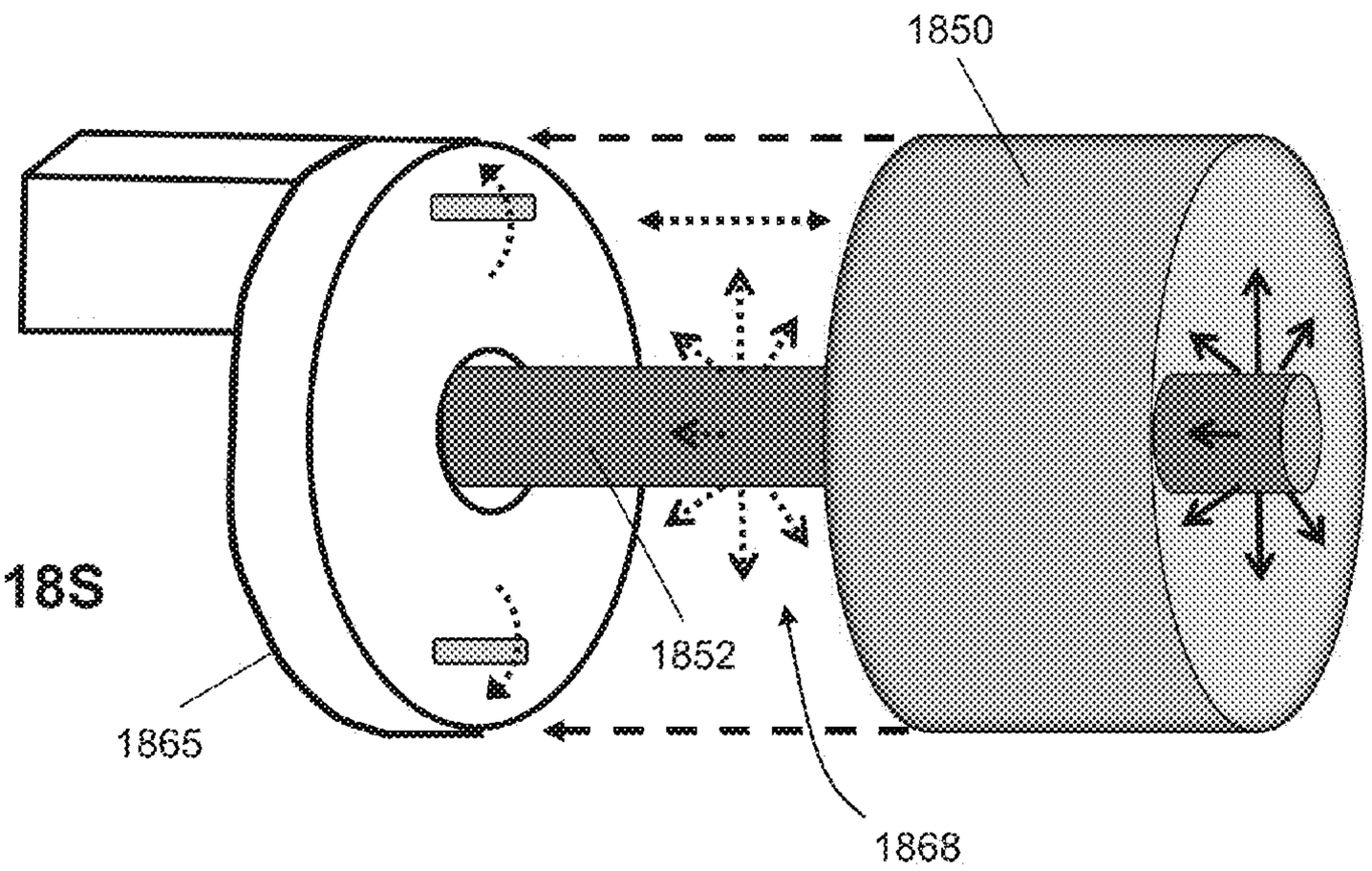

FIG. 18S

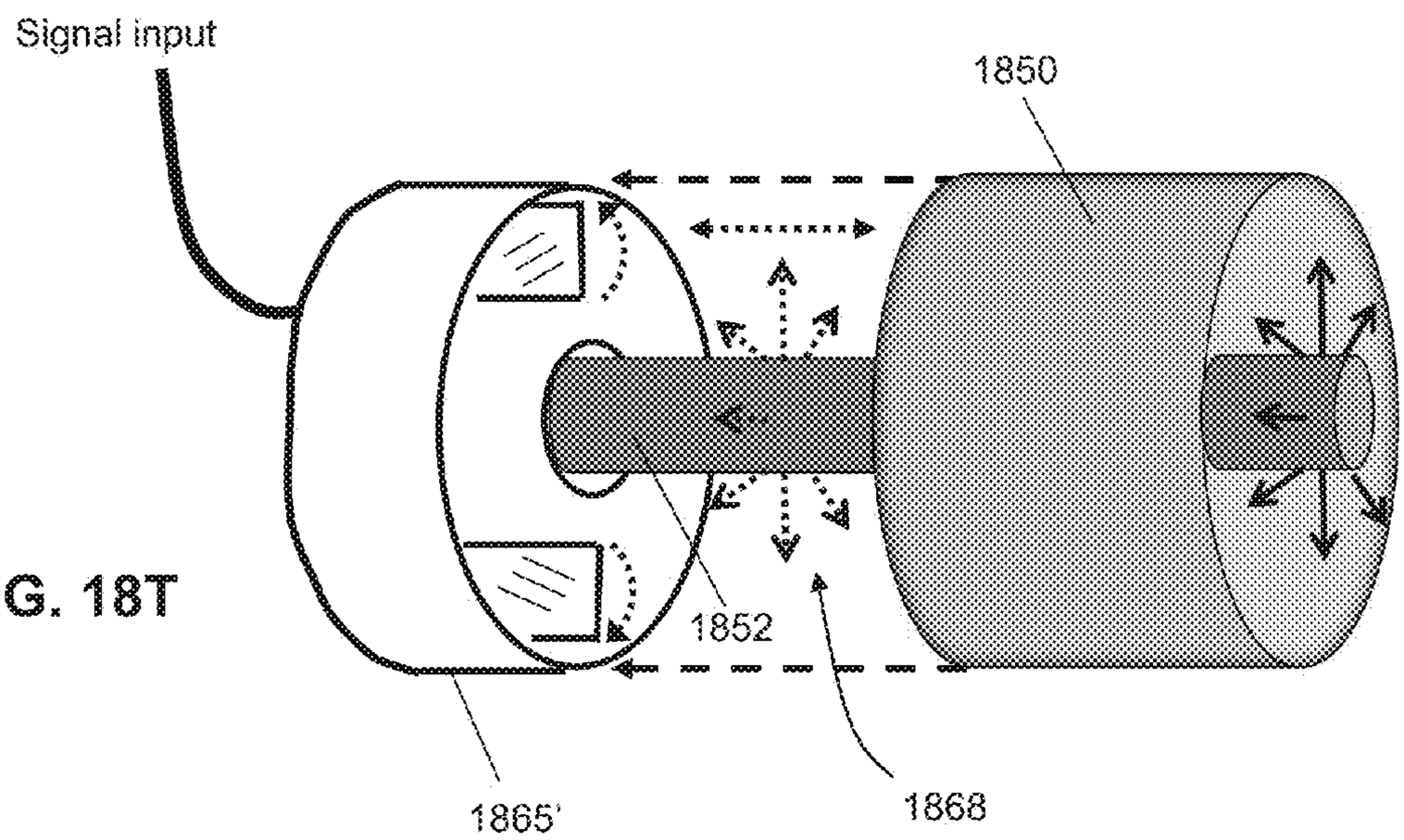

FIG. 18T

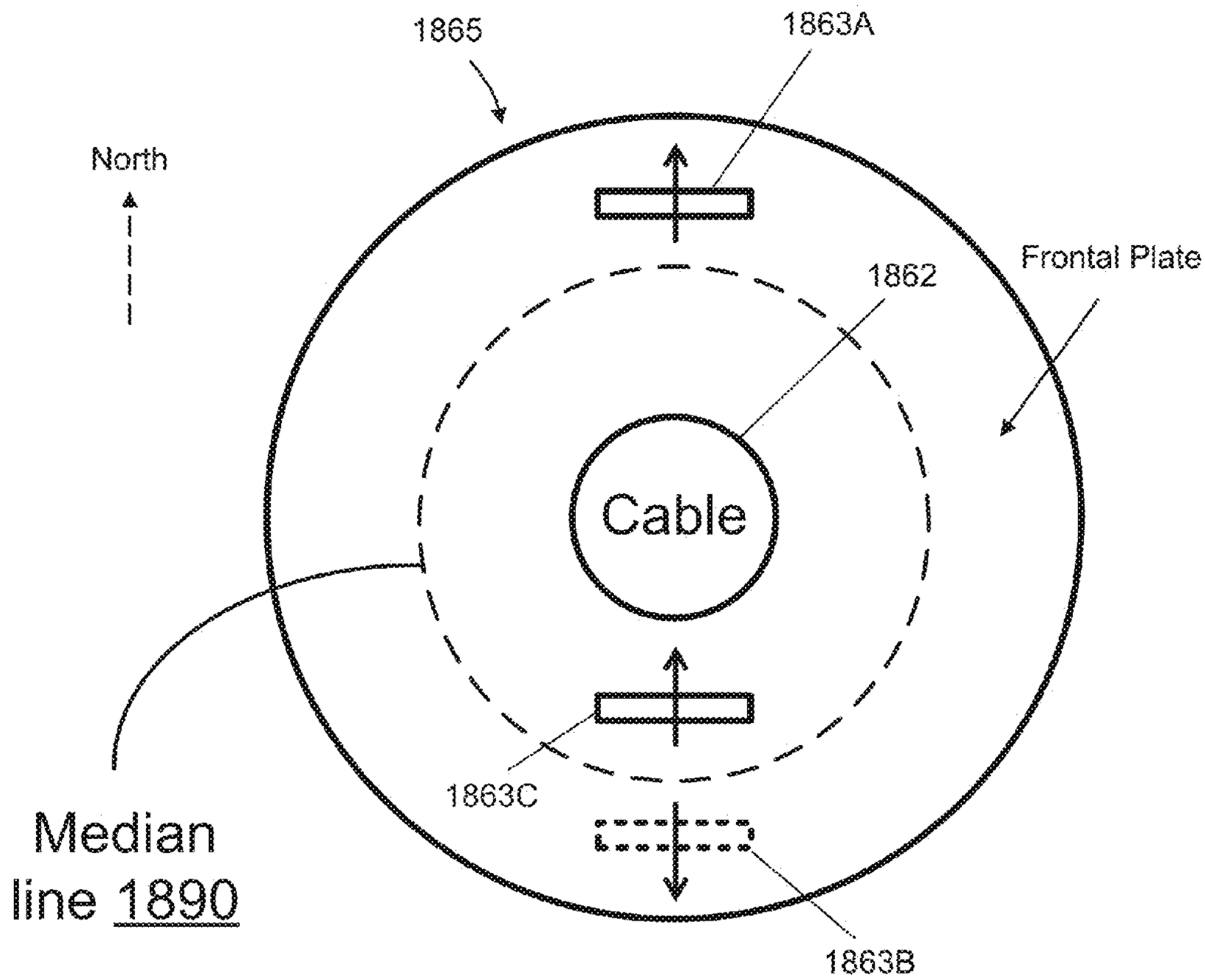
1865
1863A
North
Frontal Plate
1862
Cable
1863C
Median
line 1890
1863B

FIG. 18U

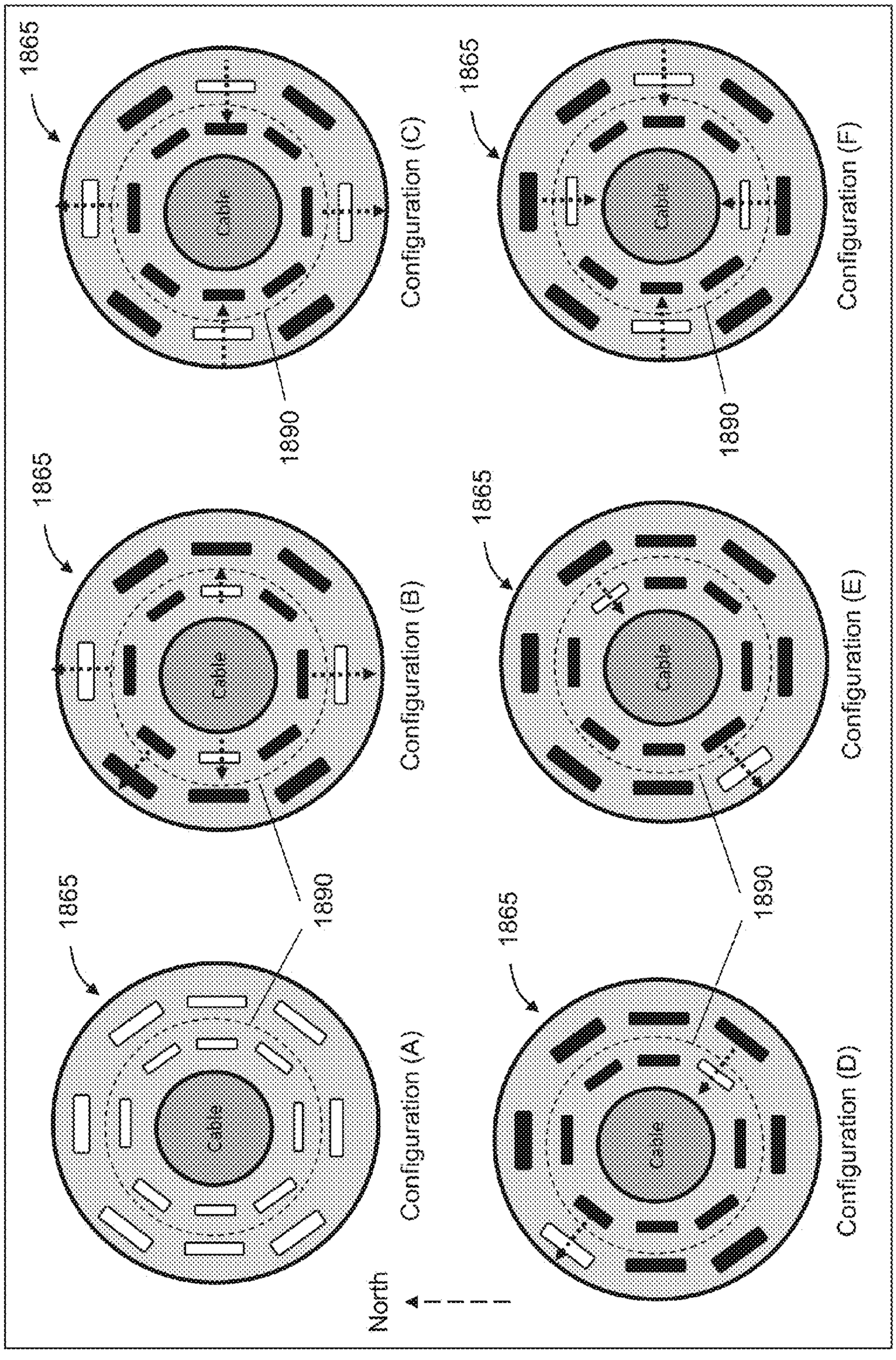
1865
1890
Cable
Configuration (A)
Configuration (B)
Configuration (C)
Configuration (D)
Configuration (E)
Configuration (F)
North

FIG. 18V

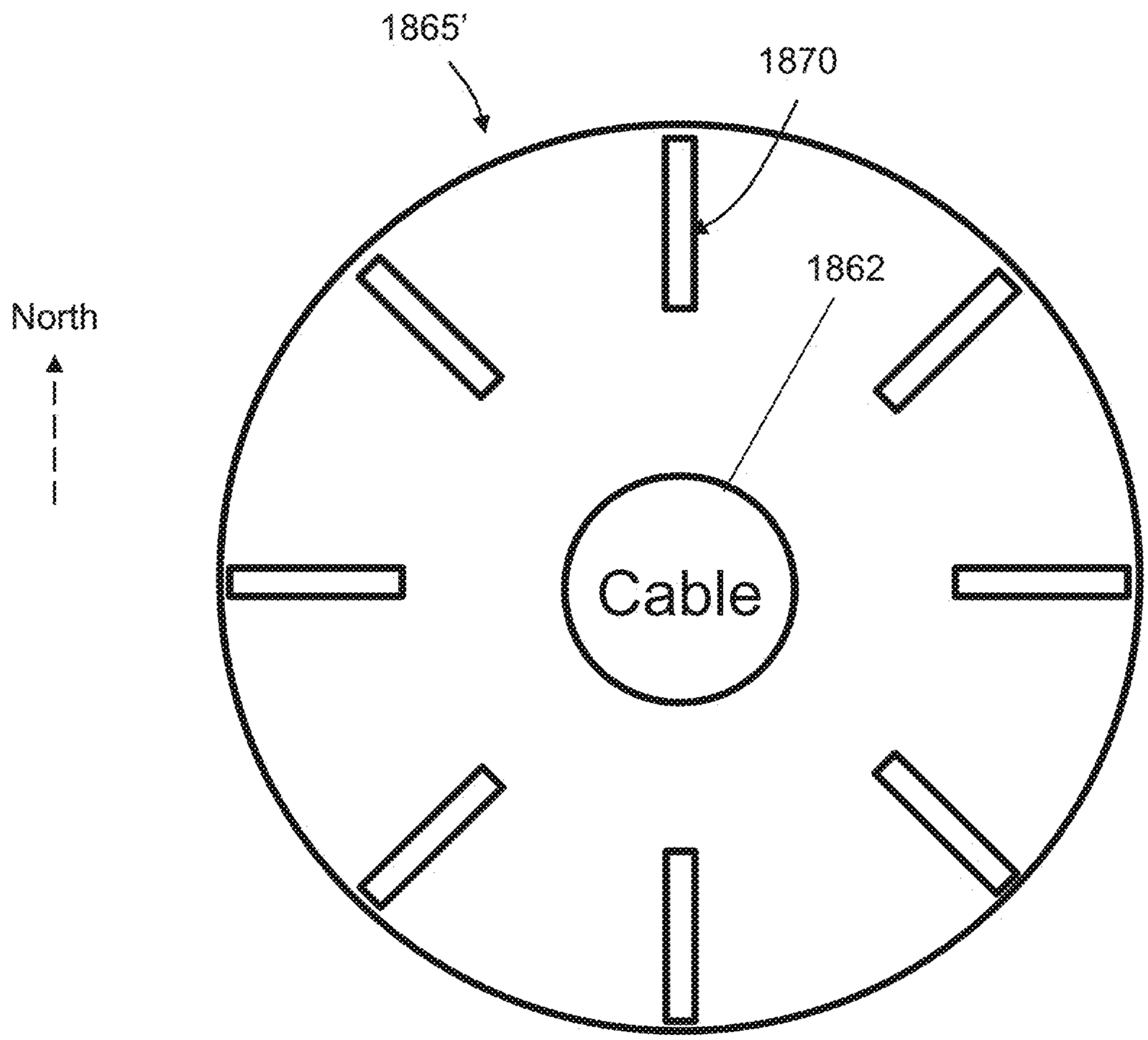

FIG. 18W

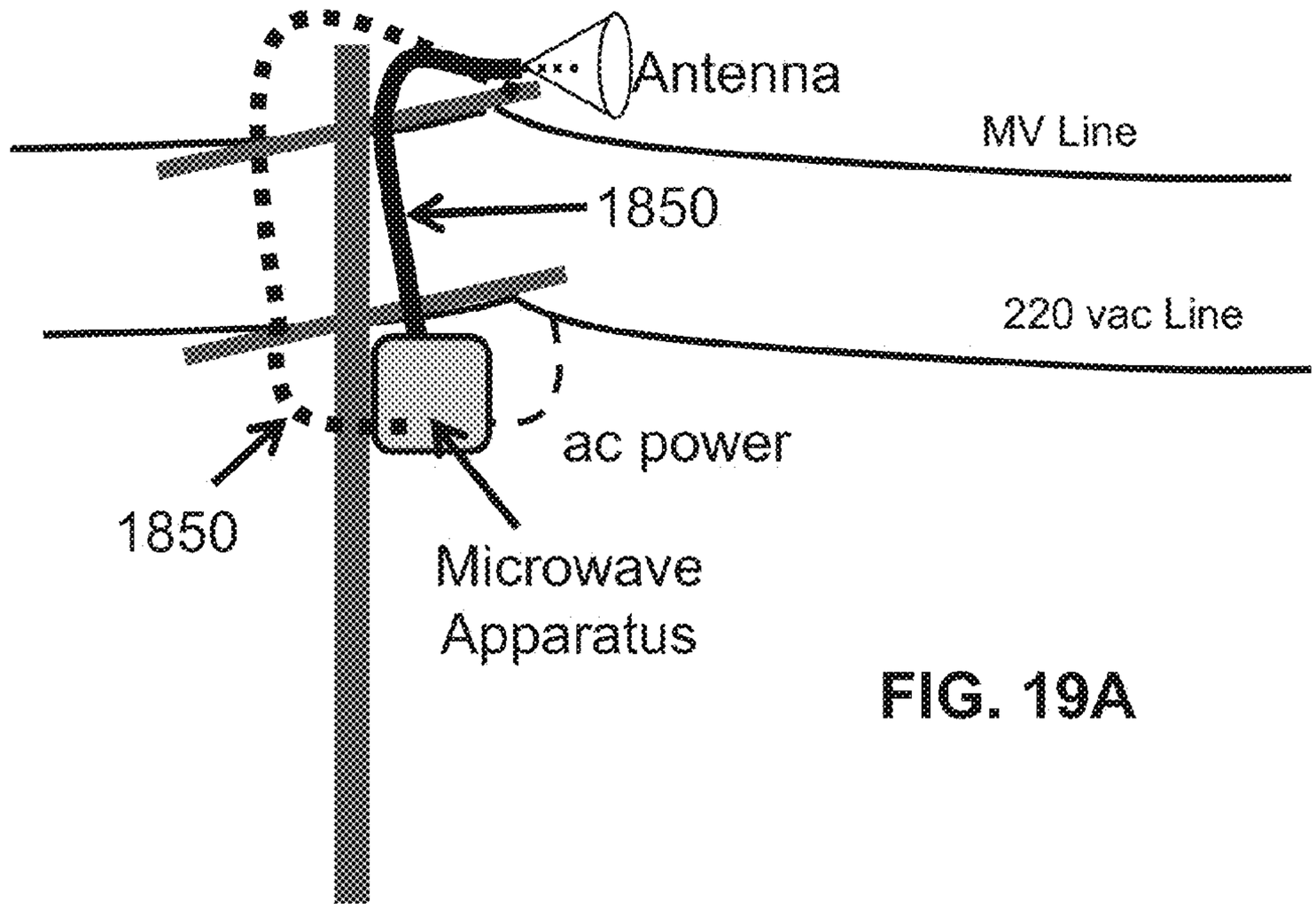

FIG. 19A

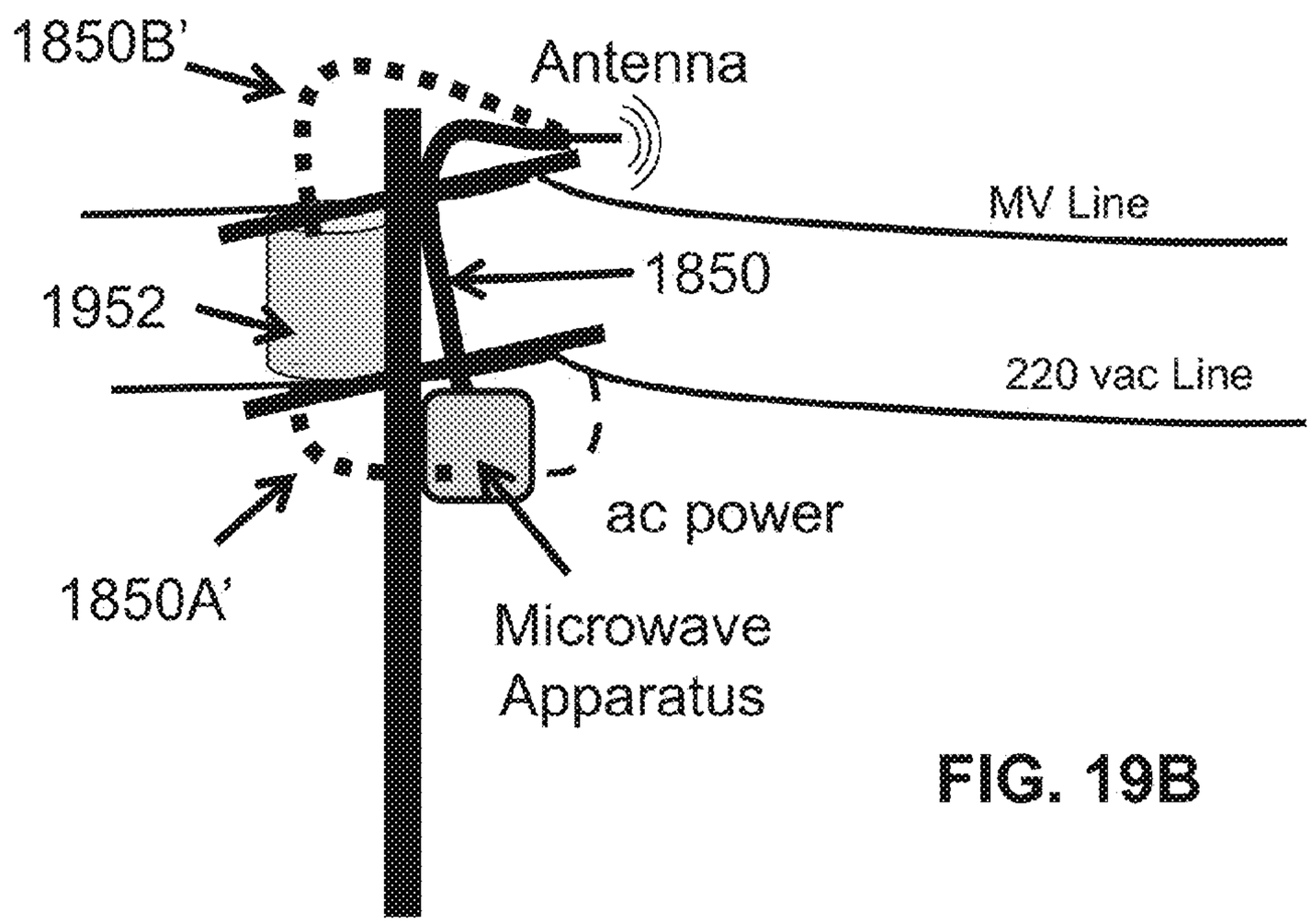

FIG. 19B

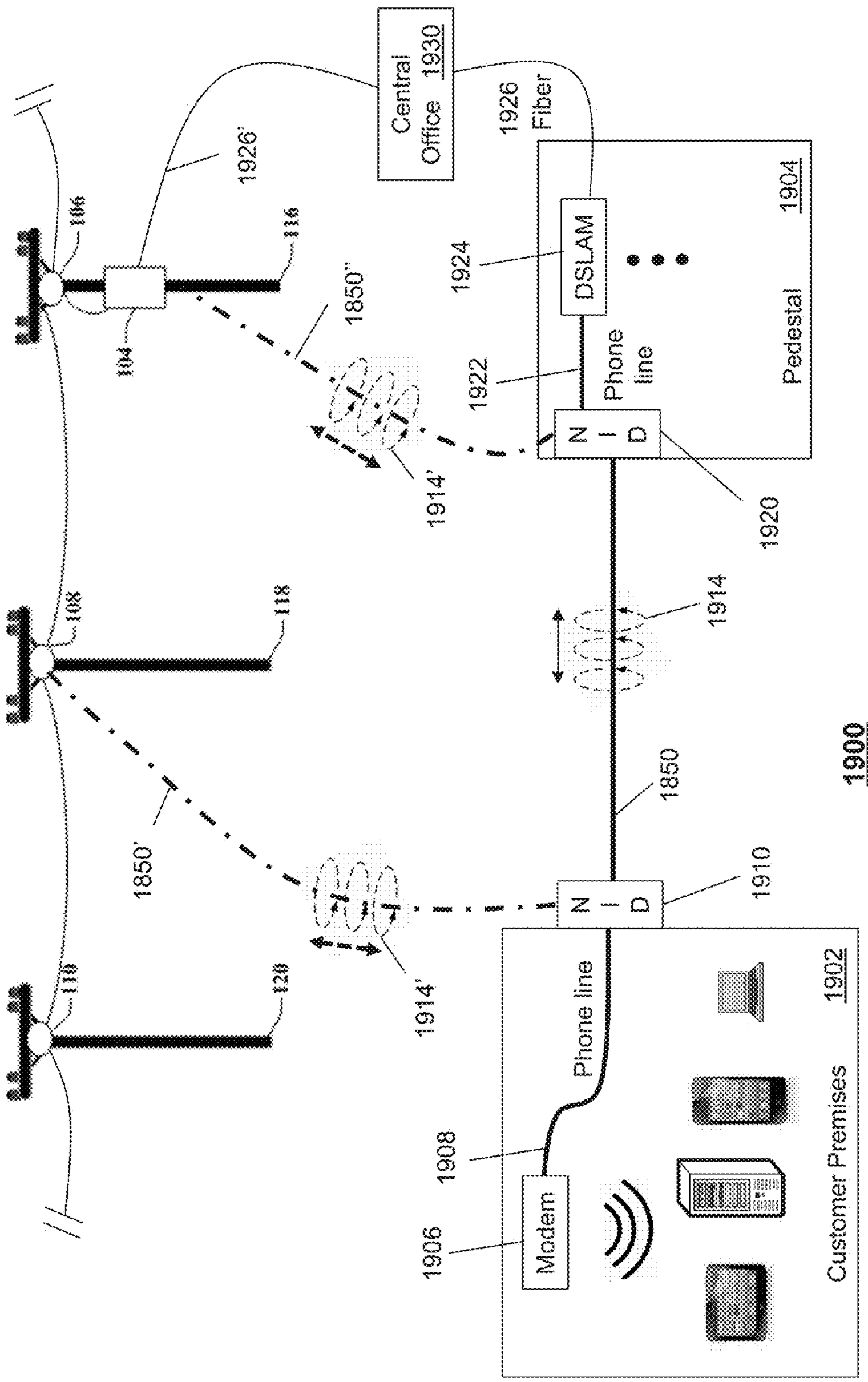
Central Office 1930
1926 Fiber
1926'
106
116
104
1850''
1924
DSLAM
1904
Pedestal
Phone line
1922
N I D
1914'
1920
108
118
1914
1850
1900
1850'
1910
N I D
110
120
1914'
Phone line
1902
Customer Premises
1908
1906
Modem

FIG. 19C

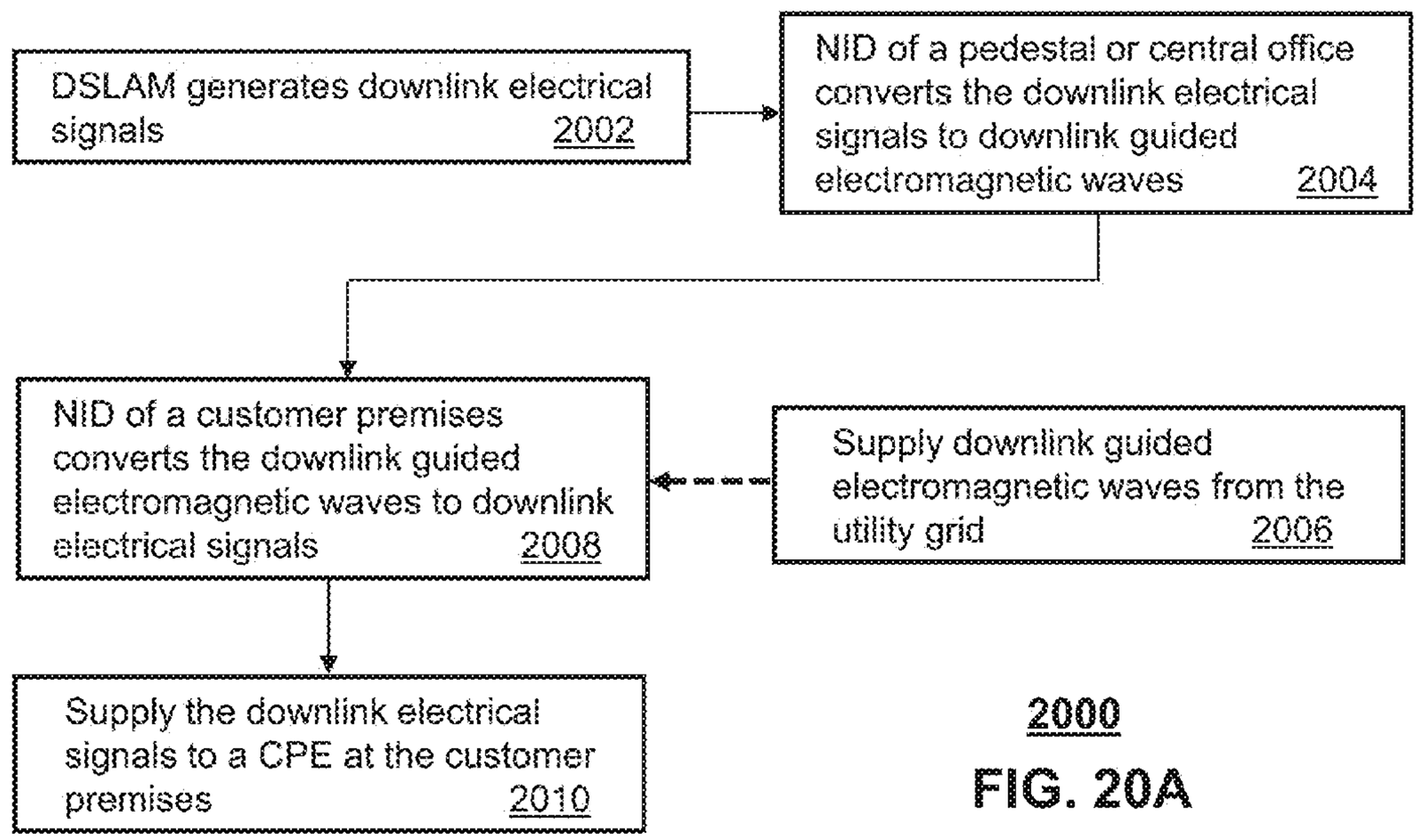

2000

FIG. 20A

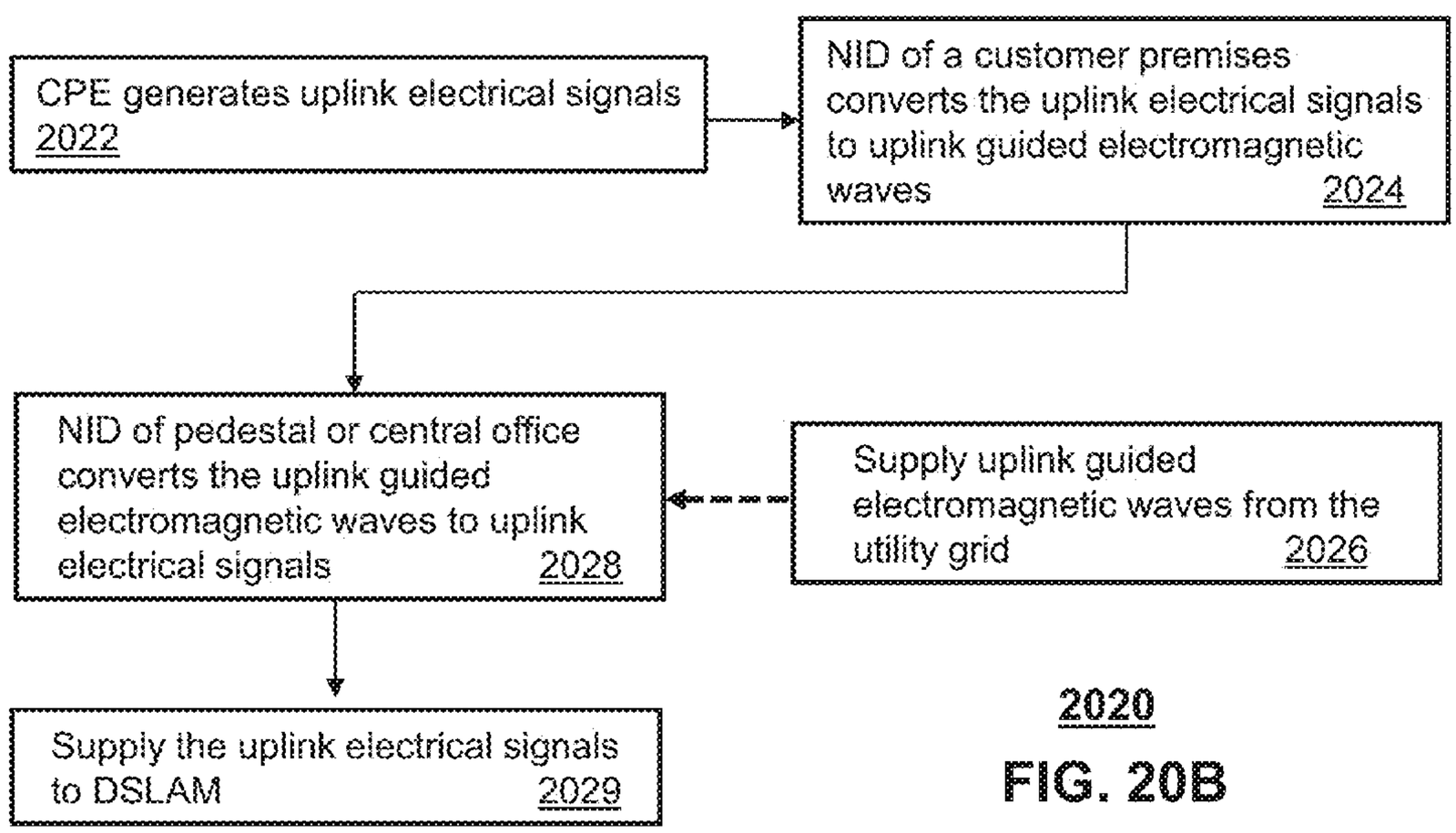

2020

FIG. 20B

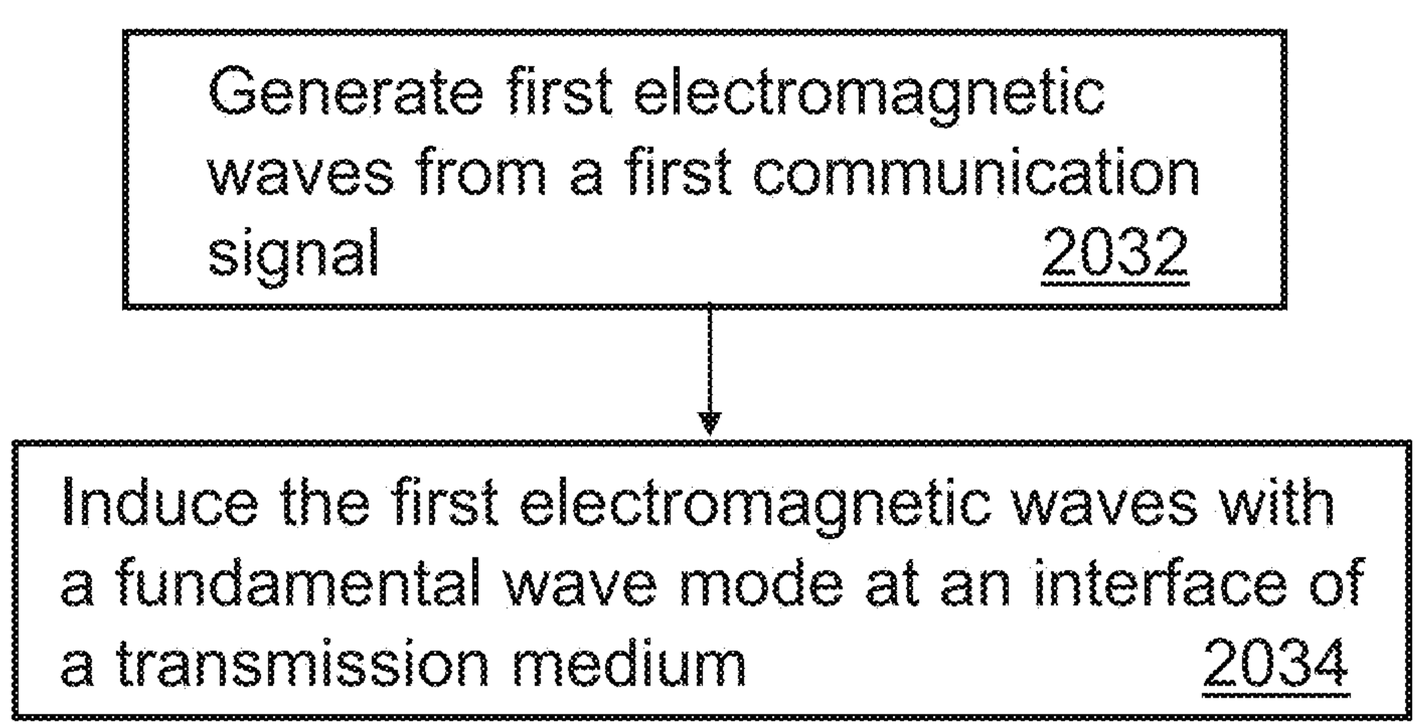

2030

FIG. 20C

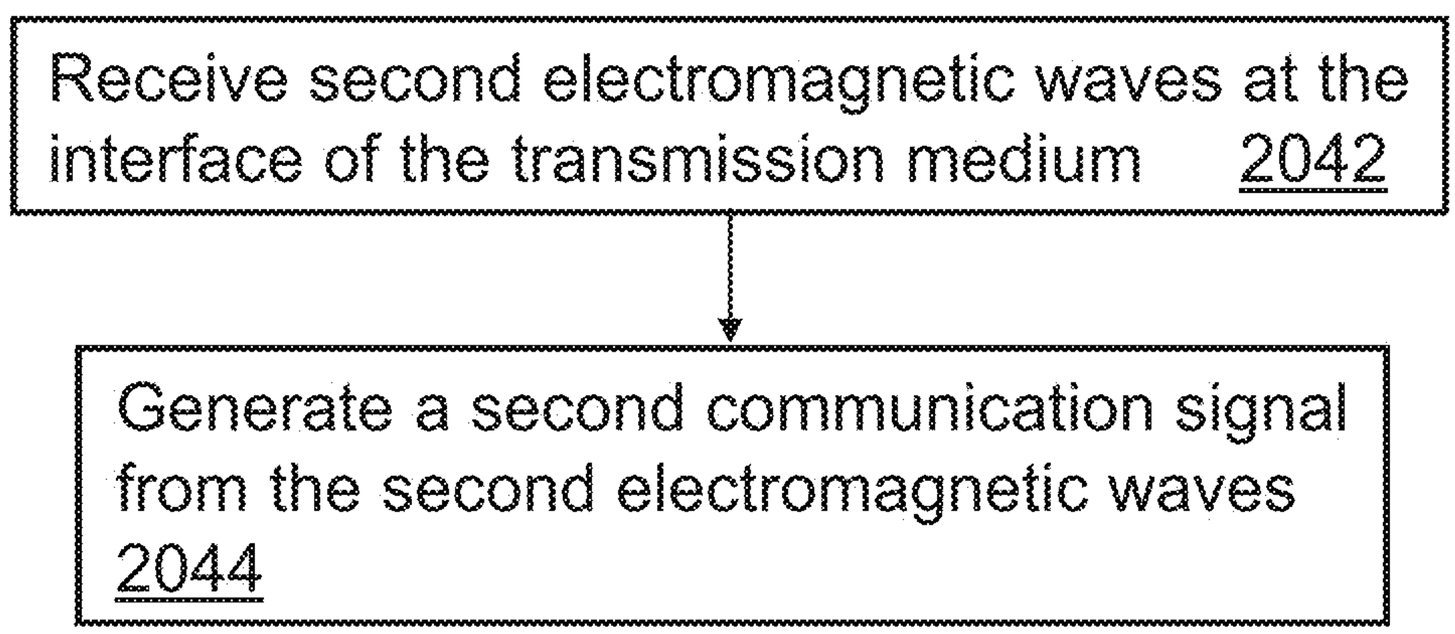

2040

FIG. 20D

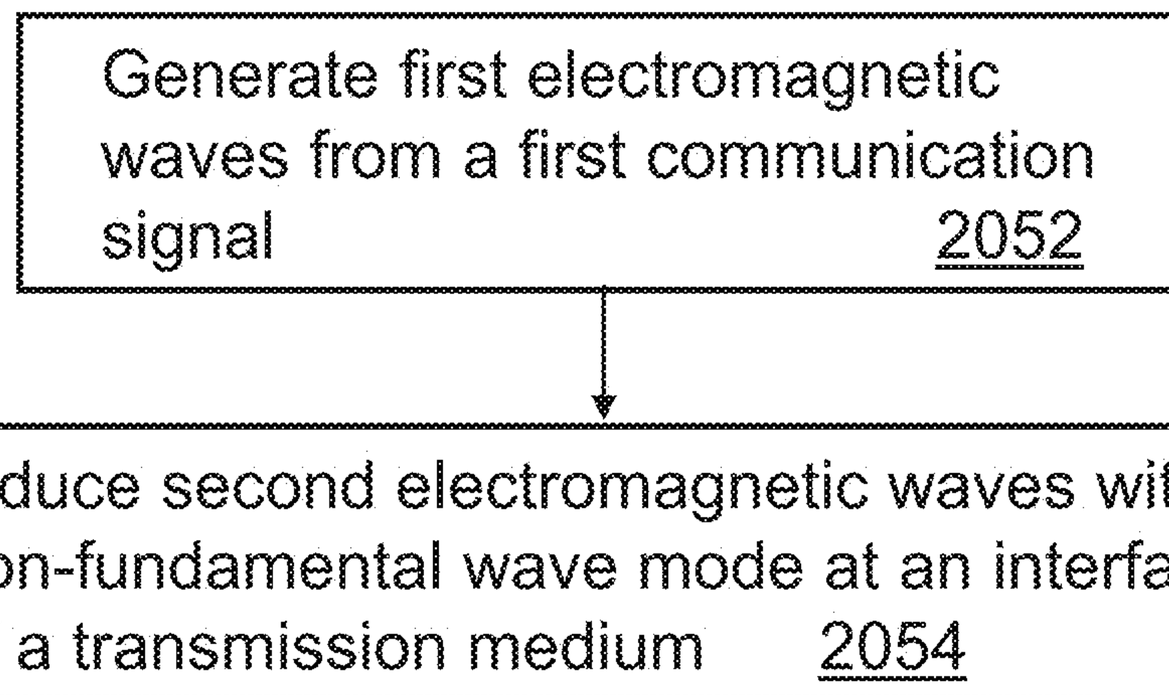

2050

FIG. 20E

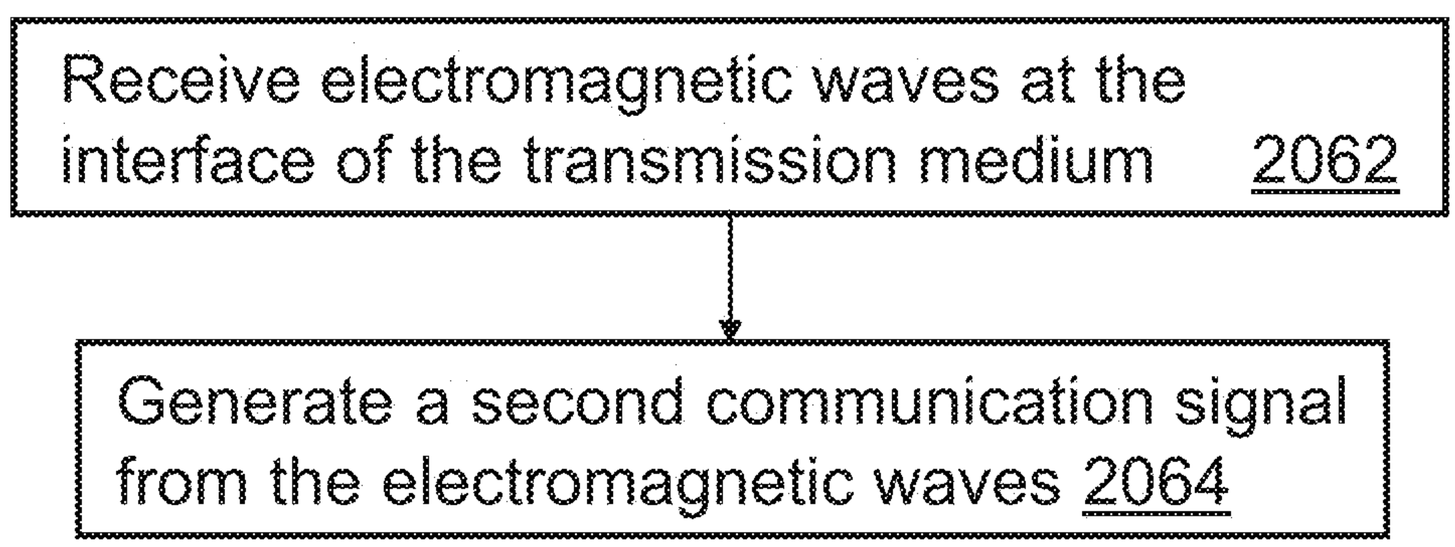

2060

FIG. 20F

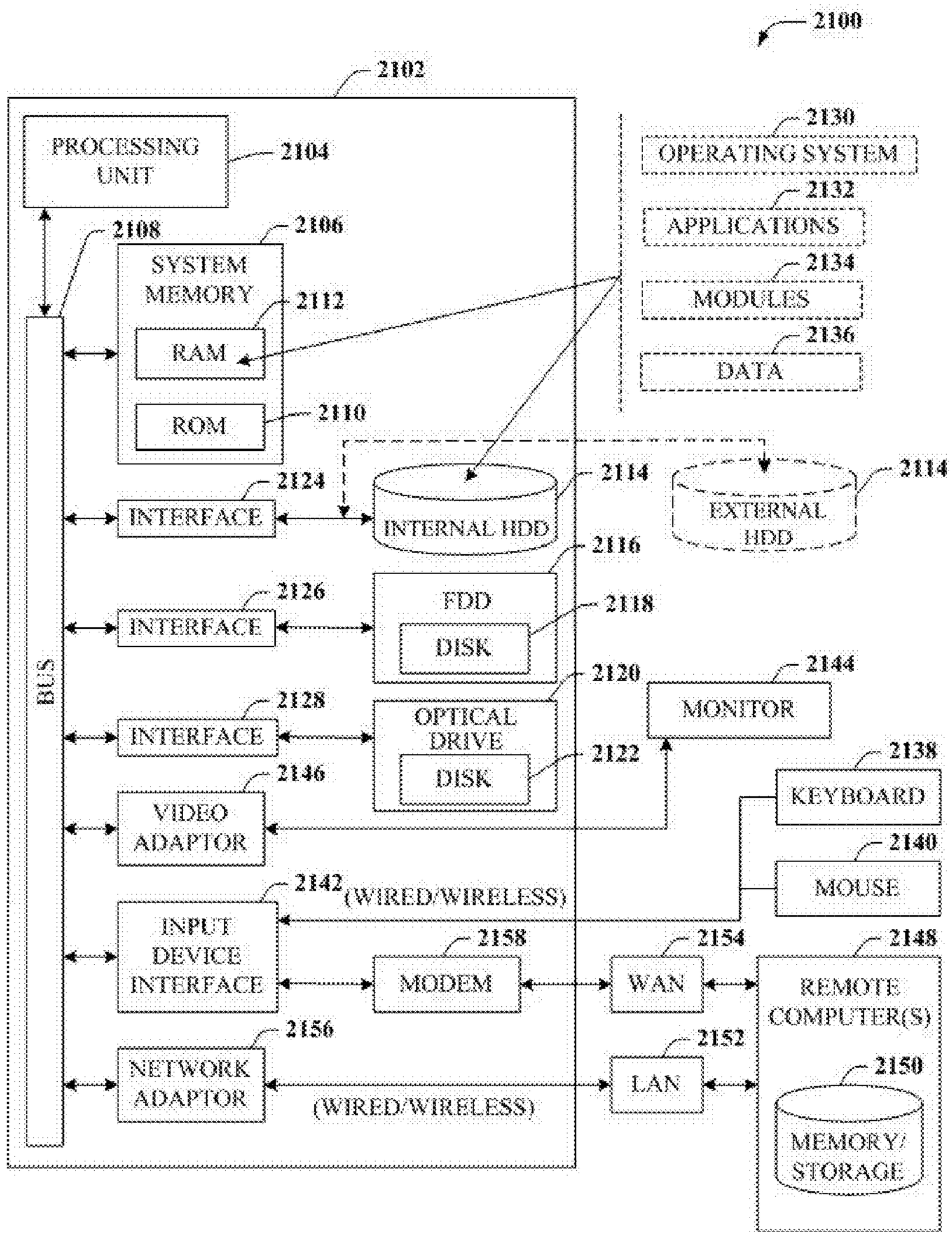
2100
2102
PROCESSING UNIT
2104
2108
2106
SYSTEM MEMORY
2112
RAM
ROM
2110
2130
OPERATING SYSTEM
2132
APPLICATIONS
2134
MODULES
2136
DATA
2124
INTERFACE
INTERNAL HDD
2114
EXTERNAL HDD
2114
2116
2126
INTERFACE
FDD
DISK
2118
BUS
2120
2144
MONITOR
2128
INTERFACE
OPTICAL DRIVE
DISK
2122
2138
KEYBOARD
2146
VIDEO ADAPTOR
2140
MOUSE
2142
(WIRED/WIRELESS)
INPUT DEVICE INTERFACE
2158
MODEM
2154
WAN
2148
REMOTE COMPUTER(S)
2156
NETWORK ADAPTOR
(WIRED/WIRELESS)
2152
LAN
2150
MEMORY/ STORAGE

FIG. 21

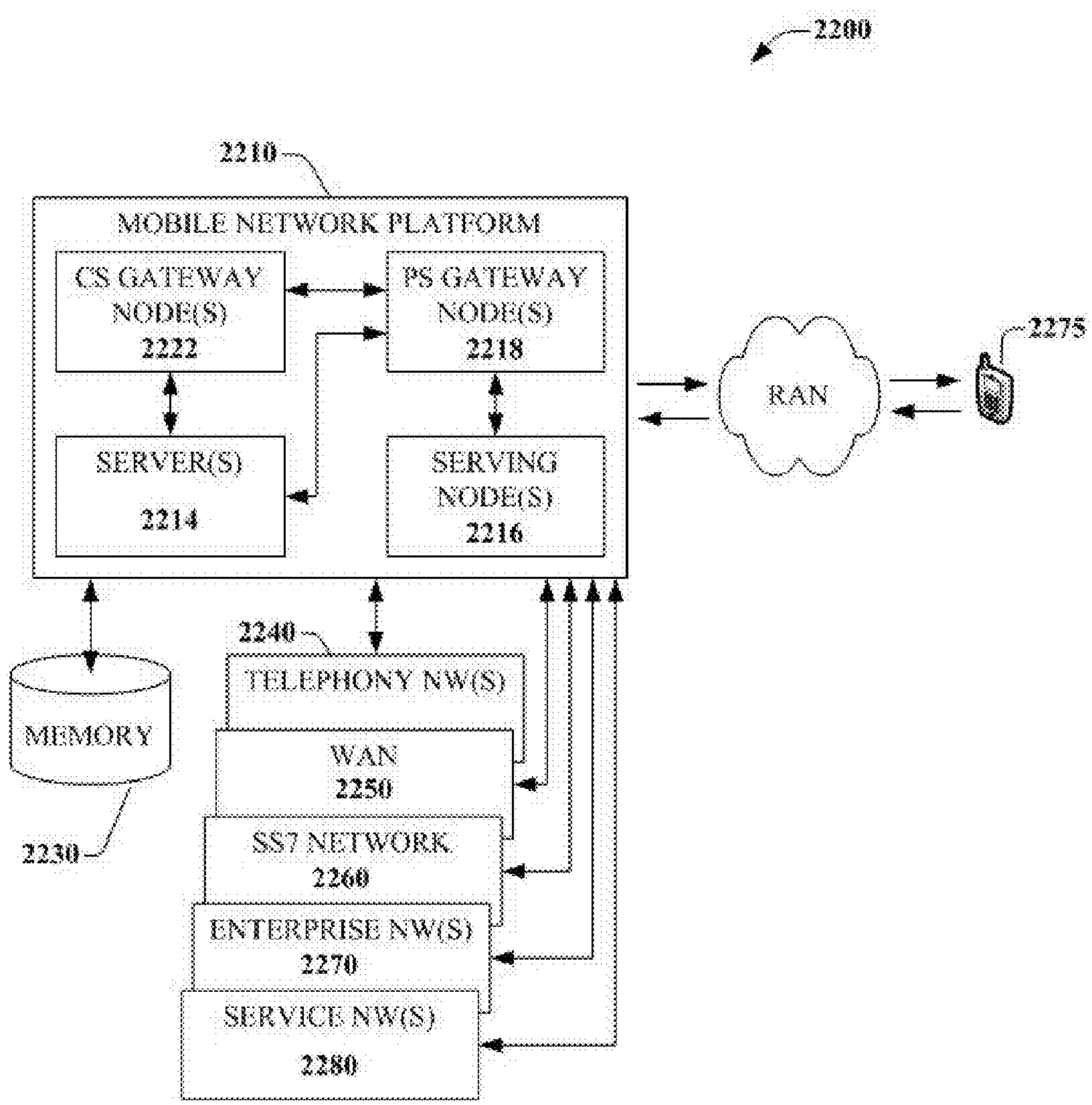
2200
2210
MOBILE NETWORK PLATFORM
CS GATEWAY NODE(S) 2222
PS GATEWAY NODE(S) 2218
SERVER(S) 2214
SERVING NODE(S) 2216
RAN
2275
2240
TELEPHONY NW(S)
MEMORY
WAN 2250
2230
SS7 NETWORK 2260
ENTERPRISE NW(S) 2270
SERVICE NW(S) 2280

FIG. 22

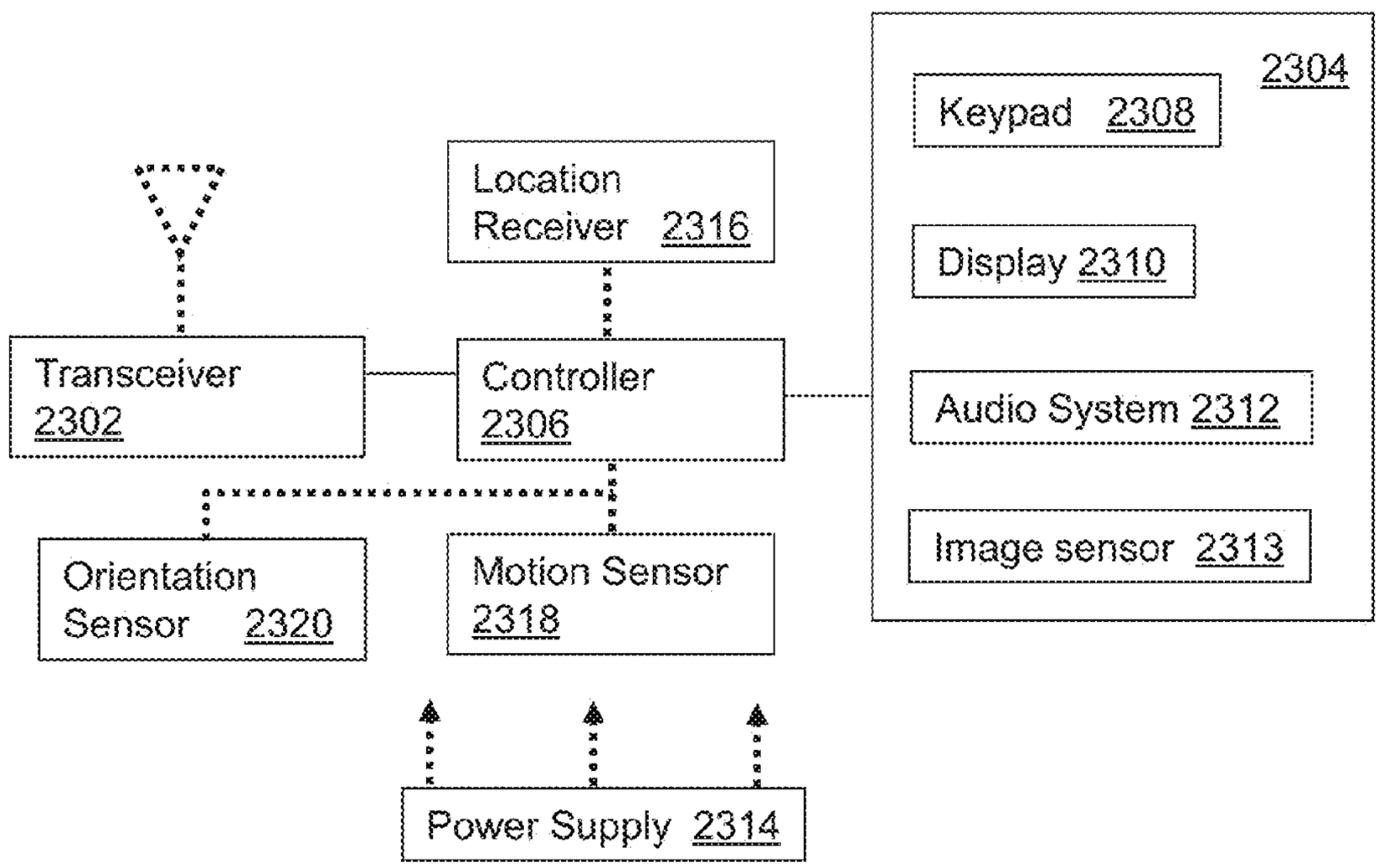
2304
Keypad 2308
Display 2310
Audio System 2312
Image sensor 2313
Location Receiver 2316
Transceiver 2302
Controller 2306
Orientation Sensor 2320
Motion Sensor 2318
Power Supply 2314

2300

FIG. 23

METHODS AND APPARATUS FOR INDUCING A NON-FUNDAMENTAL WAVE MODE ON A TRANSMISSION MEDIUM

FIELD OF THE DISCLOSURE

The subject disclosure relates to communications via microwave transmission in a communication network.

BACKGROUND

As smart phones and other portable devices increasingly become ubiquitous, and data usage increases, macrocell base station devices and existing wireless infrastructure in turn require higher bandwidth capability in order to address the increased demand. To provide additional mobile bandwidth, small cell deployment is being pursued, with microcells and picocells providing coverage for much smaller areas than traditional macrocells.

In addition, most homes and businesses have grown to rely on broadband data access for services such as voice, video and Internet browsing, etc. Broadband access networks include satellite, 4G or 5G wireless, power line communication, fiber, cable, and telephone networks.

BRIEF DESCRIPTION OF THE DRAWINGS

Reference will now be made to the accompanying drawings, which are not necessarily drawn to scale, and wherein:

FIG. **1** is a block diagram illustrating an example, non-limiting embodiment of a guided-wave communications system in accordance with various aspects described herein.

FIG. **2** is a block diagram illustrating an example, non-limiting embodiment of a transmission device in accordance with various aspects described herein.

FIG. **3** is a graphical diagram illustrating an example, non-limiting embodiment of an electromagnetic field distribution in accordance with various aspects described herein.

FIG. **4** is a graphical diagram illustrating an example, non-limiting embodiment of an electromagnetic field distribution in accordance with various aspects described herein.

FIG. **5**A is a graphical diagram illustrating an example, non-limiting embodiment of a frequency response in accordance with various aspects described herein.

FIG. **5**B is a graphical diagram illustrating example, non-limiting embodiments of a longitudinal cross-section of an insulated wire depicting fields of guided electromagnetic waves at various operating frequencies in accordance with various aspects described herein.

FIG. **6** is a graphical diagram illustrating an example, non-limiting embodiment of an electromagnetic field distribution in accordance with various aspects described herein.

FIG. **7** is a block diagram illustrating an example, non-limiting embodiment of an arc coupler in accordance with various aspects described herein.

FIG. **8** is a block diagram illustrating an example, non-limiting embodiment of an arc coupler in accordance with various aspects described herein.

FIG. **9**A is a block diagram illustrating an example, non-limiting embodiment of a stub coupler in accordance with various aspects described herein.

FIG. **9**B is a diagram illustrating an example, non-limiting embodiment of an electromagnetic distribution in accordance with various aspects described herein.

FIGS. **10**A and **10**B are block diagrams illustrating example, non-limiting embodiments of couplers and transceivers in accordance with various aspects described herein.

FIG. **11** is a block diagram illustrating an example, non-limiting embodiment of a dual stub coupler in accordance with various aspects described herein.

FIG. **12** is a block diagram illustrating an example, non-limiting embodiment of a repeater system in accordance with various aspects described herein.

FIG. **13** illustrates a block diagram illustrating an example, non-limiting embodiment of a bidirectional repeater in accordance with various aspects described herein.

FIG. **14** is a block diagram illustrating an example, non-limiting embodiment of a waveguide system in accordance with various aspects described herein.

FIG. **15** is a block diagram illustrating an example, non-limiting embodiment of a guided-wave communications system in accordance with various aspects described herein.

FIGS. **16**A & **16**B are block diagrams illustrating an example, non-limiting embodiment of a system for managing a power grid communication system in accordance with various aspects described herein.

FIG. **17**A illustrates a flow diagram of an example, non-limiting embodiment of a method for detecting and mitigating disturbances occurring in a communication network of the system of FIGS. **16**A and **16**B.

FIG. **17**B illustrates a flow diagram of an example, non-limiting embodiment of a method for detecting and mitigating disturbances occurring in a communication network of the system of FIGS. **16**A and **16**B.

FIGS. **18**A, **18**B, and **18**C are block diagrams illustrating example, non-limiting embodiment of a transmission medium for propagating guided electromagnetic waves.

FIG. **18**D is a block diagram illustrating an example, non-limiting embodiment of bundled transmission media in accordance with various aspects described herein.

FIG. **18**E is a block diagram illustrating an example, non-limiting embodiment of a plot depicting cross-talk between first and second transmission mediums of the bundled transmission media of FIG. **18**D in accordance with various aspects described herein.

FIG. **18**F is a block diagram illustrating an example, non-limiting embodiment of bundled transmission media to mitigate cross-talk in accordance with various aspects described herein.

FIGS. **18**G and **18**H are block diagrams illustrating example, non-limiting embodiments of a transmission medium with an inner waveguide in accordance with various aspects described herein.

FIGS. **18**I and **18**J are block diagrams illustrating example, non-limiting embodiments of connector configurations that can be used with the transmission medium of FIG. **18**A, **18**B, or **18**C.

FIG. **18**K is a block diagram illustrating example, non-limiting embodiments of transmission mediums for propagating guided electromagnetic waves.

FIG. **18**L is a block diagram illustrating example, non-limiting embodiments of bundled transmission media to mitigate cross-talk in accordance with various aspects described herein.

FIG. **18**M is a block diagram illustrating an example, non-limiting embodiment of exposed stubs from the bundled transmission media for use as antennas in accordance with various aspects described herein.

FIG. **18**N is a block diagram illustrating an example, non-limiting embodiment of a front view of a slotted waveguide device in accordance with various aspects described herein.

FIG. **18**O is a block diagram illustrating an example, non-limiting embodiment of a perspective view of a slotted waveguide device in accordance with various aspects described herein.

FIG. **18**P is a block diagram illustrating an example, non-limiting embodiment of a perspective view of a waveguide device with microwave circuits in accordance with various aspects described herein.

FIG. **18**Q is a block diagram illustrating an example, non-limiting embodiment of a perspective view of a slotted waveguide device having a waveguide structure for guiding electromagnetic waves in accordance with various aspects described herein.

FIG. **18**R is a block diagram illustrating an example, non-limiting embodiment of a perspective view of a waveguide device with microwave circuits having a waveguide structure for guiding electromagnetic waves in accordance with various aspects described herein.

FIG. **18**S is a block diagram illustrating an example, non-limiting embodiment of a perspective view of a slotted waveguide device coupled to a cable in accordance with various aspects described herein.

FIG. **18**T is a block diagram illustrating an example, non-limiting embodiment of a perspective view of a waveguide device with microwave circuits coupled to a cable in accordance with various aspects described herein.

FIG. **18**U is a block diagram illustrating an example, non-limiting embodiment of a front view of a slotted waveguide device with a median line for identifying a polarity region of electromagnetic waves in accordance with various aspects described herein.

FIG. **18**V are block diagrams illustrating example, non-limiting embodiments of a front view of a slotted waveguide device with various slot configurations in accordance with various aspects described herein.

FIGS. **19**A and **19**B are block diagrams illustrating example, non-limiting embodiments of the transmission medium of FIG. **18**A used for inducing guided electromagnetic waves on power lines supported by utility poles.

FIG. **19**C is a block diagram of an example, non-limiting embodiment of a communication network in accordance with various aspects described herein.

FIG. **20**A illustrates a flow diagram of an example, non-limiting embodiment of a method for transmitting downlink signals.

FIG. **20**B illustrates a flow diagram of an example, non-limiting embodiment of a method for transmitting uplink signals.

FIG. **20**C illustrates a flow diagram of an example, non-limiting embodiment of a method for inducing electromagnetic waves on a transmission medium.

FIG. **20**D illustrates a flow diagram of an example, non-limiting embodiment of a method for receiving electromagnetic waves from a transmission medium.

FIG. **20**E illustrates a flow diagram of an example, non-limiting embodiment of a method for inducing electromagnetic waves on a transmission medium.

FIG. **20**F illustrates a flow diagram of an example, non-limiting embodiment of a method for receiving electromagnetic waves from a transmission medium.

FIG. **21** is a block diagram of an example, non-limiting embodiment of a computing environment in accordance with various aspects described herein.

FIG. **22** is a block diagram of an example, non-limiting embodiment of a mobile network platform in accordance with various aspects described herein.

FIG. **23** is a block diagram of an example, non-limiting embodiment of a communication device in accordance with various aspects described herein.

DETAILED DESCRIPTION

One or more embodiments are now described with reference to the drawings, wherein like reference numerals are used to refer to like elements throughout. In the following description, for purposes of explanation, numerous details are set forth in order to provide a thorough understanding of the various embodiments. It is evident, however, that the various embodiments can be practiced without these details (and without applying to any particular networked environment or standard).

In an embodiment, a guided wave communication system is presented for sending and receiving communication signals such as data or other signaling via guided electromagnetic waves. The guided electromagnetic waves include, for example, surface waves or other electromagnetic waves that are bound to or guided by a transmission medium. It will be appreciated that a variety of transmission media can be utilized with guided wave communications without departing from example embodiments. Examples of such transmission media can include one or more of the following, either alone or in one or more combinations: wires, whether insulated or not, and whether single-stranded or multi-stranded; conductors of other shapes or configurations including wire bundles, cables, rods, rails, pipes; non-conductors such as dielectric pipes, rods, rails, or other dielectric members; combinations of conductors and dielectric materials; or other guided wave transmission media.

The inducement of guided electromagnetic waves on a transmission medium can be independent of any electrical potential, charge or current that is injected or otherwise transmitted through the transmission medium as part of an electrical circuit. For example, in the case where the transmission medium is a wire, it is to be appreciated that while a small current in the wire may be formed in response to the propagation of the guided waves along the wire, this can be due to the propagation of the electromagnetic wave along the wire surface, and is not formed in response to electrical potential, charge or current that is injected into the wire as part of an electrical circuit. The electromagnetic waves traveling on the wire therefore do not require a circuit to propagate along the wire surface. The wire therefore is a single wire transmission line that is not part of a circuit. Also, in some embodiments, a wire is not necessary, and the electromagnetic waves can propagate along a single line transmission medium that is not a wire.

More generally, "guided electromagnetic waves" or "guided waves" as described by the subject disclosure are affected by the presence of a physical object that is at least a part of the transmission medium (e.g., a bare wire or other conductor, a dielectric, an insulated wire, a conduit or other hollow element, a bundle of insulated wires that is coated, covered or surrounded by a dielectric or insulator or other wire bundle, or another form of solid, liquid or otherwise non-gaseous transmission medium) so as to be at least partially bound to or guided by the physical object and so as to propagate along a transmission path of the physical object. Such a physical object can operate as at least a part of a transmission medium that guides, by way of an interface of the transmission medium (e.g., an outer surface, inner surface, an interior portion between the outer and the inner surfaces or other boundary between elements of the transmission medium), the propagation of guided electromag-

netic waves, which in turn can carry energy, data and/or other signals along the transmission path from a sending device to a receiving device.

Unlike free space propagation of wireless signals such as unguided (or unbounded) electromagnetic waves that decrease in intensity inversely by the square of the distance traveled by the unguided electromagnetic waves, guided electromagnetic waves can propagate along a transmission medium with less loss in magnitude per unit distance than experienced by unguided electromagnetic waves.

Unlike electrical signals, guided electromagnetic waves can propagate from a sending device to a receiving device without requiring a separate electrical return path between the sending device and the receiving device. As a consequence, guided electromagnetic waves can propagate from a sending device to a receiving device along a transmission medium having no conductive components (e.g., a dielectric strip), or via a transmission medium having no more than a single conductor (e.g., a single bare wire or insulated wire). Even if a transmission medium includes one or more conductive components and the guided electromagnetic waves propagating along the transmission medium generate currents that flow in the one or more conductive components in a direction of the guided electromagnetic waves, such guided electromagnetic waves can propagate along the transmission medium from a sending device to a receiving device without requiring a flow of opposing currents on an electrical return path between the sending device and the receiving device.

In a non-limiting illustration, consider electrical systems that transmit and receive electrical signals between sending and receiving devices by way of conductive media. Such systems generally rely on electrically separate forward and return paths. For instance, consider a coaxial cable having a center conductor and a ground shield that are separated by an insulator. Typically, in an electrical system a first terminal of a sending (or receiving) device can be connected to the center conductor, and a second terminal of the sending (or receiving) device can be connected to the ground shield. If the sending device injects an electrical signal in the center conductor via the first terminal, the electrical signal will propagate along the center conductor causing forward currents in the center conductor, and return currents in the ground shield. The same conditions apply for a two terminal receiving device.

In contrast, consider a guided wave communication system such as described in the subject disclosure, which can utilize different embodiments of a transmission medium (including among others a coaxial cable) for transmitting and receiving guided electromagnetic waves without an electrical return path. In one embodiment, for example, the guided wave communication system of the subject disclosure can be configured to induce guided electromagnetic waves that propagate along an outer surface of a coaxial cable. Although the guided electromagnetic waves will cause forward currents on the ground shield, the guided electromagnetic waves do not require return currents to enable the guided electromagnetic waves to propagate along the outer surface of the coaxial cable. The same can be said of other transmission media used by a guided wave communication system for the transmission and reception of guided electromagnetic waves. For example, guided electromagnetic waves induced by the guided wave communication system on an outer surface of a bare wire, or an insulated wire can propagate along the bare wire or the insulated bare wire without an electrical return path.

Consequently, electrical systems that require two or more conductors for carrying forward and reverse currents on separate conductors to enable the propagation of electrical signals injected by a sending device are distinct from guided wave systems that induce guided electromagnetic waves on an interface of a transmission medium without the need of an electrical return path to enable the propagation of the guided electromagnetic waves along the interface of the transmission medium.

It is further noted that guided electromagnetic waves as described in the subject disclosure can have an electromagnetic field structure that lies primarily or substantially outside of a transmission medium so as to be bound to or guided by the transmission medium and so as to propagate non-trivial distances on or along an outer surface of the transmission medium. In other embodiments, guided electromagnetic waves can have an electromagnetic field structure that lies primarily or substantially inside a transmission medium so as to be bound to or guided by the transmission medium and so as to propagate non-trivial distances within the transmission medium. In other embodiments, guided electromagnetic waves can have an electromagnetic field structure that lies partially inside and partially outside a transmission medium so as to be bound to or guided by the transmission medium and so as to propagate non-trivial distances along the transmission medium. The desired electronic field structure in an embodiment may vary based upon a variety of factors, including the desired transmission distance, the characteristics of the transmission medium itself, and environmental conditions/characteristics outside of the transmission medium (e.g., presence of rain, fog, atmospheric conditions, etc.).

Various embodiments described herein relate to coupling devices, that can be referred to as "waveguide coupling devices", "waveguide couplers" or more simply as "couplers", "coupling devices" or "launchers" for launching and/or extracting guided electromagnetic waves to and from a transmission medium at millimeter-wave frequencies (e.g., 30 to 300 GHz), wherein the wavelength can be small compared to one or more dimensions of the coupling device and/or the transmission medium such as the circumference of a wire or other cross sectional dimension, or lower microwave frequencies such as 300 MHz to 30 GHz. Transmissions can be generated to propagate as waves guided by a coupling device, such as: a strip, arc or other length of dielectric material; a horn, monopole, rod, slot or other antenna; an array of antennas; a magnetic resonant cavity, or other resonant coupler; a coil, a strip line, a waveguide or other coupling device. In operation, the coupling device receives an electromagnetic wave from a transmitter or transmission medium. The electromagnetic field structure of the electromagnetic wave can be carried inside the coupling device, outside the coupling device or some combination thereof. When the coupling device is in close proximity to a transmission medium, at least a portion of an electromagnetic wave couples to or is bound to the transmission medium, and continues to propagate as guided electromagnetic waves. In a reciprocal fashion, a coupling device can extract guided waves from a transmission medium and transfer these electromagnetic waves to a receiver.

According to an example embodiment, a surface wave is a type of guided wave that is guided by a surface of a transmission medium, such as an exterior or outer surface of the wire, or another surface of the wire that is adjacent to or exposed to another type of medium having different properties (e.g., dielectric properties). Indeed, in an example embodiment, a surface of the wire that guides a surface wave

can represent a transitional surface between two different types of media. For example, in the case of a bare or uninsulated wire, the surface of the wire can be the outer or exterior conductive surface of the bare or uninsulated wire that is exposed to air or free space. As another example, in the case of insulated wire, the surface of the wire can be the conductive portion of the wire that meets the insulator portion of the wire, or can otherwise be the insulator surface of the wire that is exposed to air or free space, or can otherwise be any material region between the insulator surface of the wire and the conductive portion of the wire that meets the insulator portion of the wire, depending upon the relative differences in the properties (e.g., dielectric properties) of the insulator, air, and/or the conductor and further dependent on the frequency and propagation mode or modes of the guided wave.

According to an example embodiment, the term "about" a wire or other transmission medium used in conjunction with a guided wave can include fundamental guided wave propagation modes such as a guided waves having a circular or substantially circular field distribution, a symmetrical electromagnetic field distribution (e.g., electric field, magnetic field, electromagnetic field, etc.) or other fundamental mode pattern at least partially around a wire or other transmission medium. In addition, when a guided wave propagates "about" a wire or other transmission medium, it can do so according to a guided wave propagation mode that includes not only the fundamental wave propagation modes (e.g., zero order modes), but additionally or alternatively non-fundamental wave propagation modes such as higher-order guided wave modes (e.g., 1st order modes, 2nd order modes, etc.), asymmetrical modes and/or other guided (e.g., surface) waves that have non-circular field distributions around a wire or other transmission medium. As used herein, the term "guided wave mode" refers to a guided wave propagation mode of a transmission medium, coupling device or other system component of a guided wave communication system.

For example, such non-circular field distributions can be unilateral or multi-lateral with one or more axial lobes characterized by relatively higher field strength and/or one or more nulls or null regions characterized by relatively low-field strength, zero-field strength or substantially zero-field strength. Further, the field distribution can otherwise vary as a function of azimuthal orientation around the wire such that one or more angular regions around the wire have an electric or magnetic field strength (or combination thereof) that is higher than one or more other angular regions of azimuthal orientation, according to an example embodiment. It will be appreciated that the relative orientations or positions of the guided wave higher order modes or asymmetrical modes can vary as the guided wave travels along the wire.

As used herein, the term "millimeter-wave" can refer to electromagnetic waves/signals that fall within the "millimeter-wave frequency band" of 30 GHz to 300 GHz. The term "microwave" can refer to electromagnetic waves/signals that fall within a "microwave frequency band" of 300 MHz to 300 GHz. The term "radio frequency" or "RF" can refer to electromagnetic waves/signals that fall within the "radio frequency band" of 10 kHz to 1 THz. It is appreciated that wireless signals, electrical signals, and guided electromagnetic waves as described in the subject disclosure can be configured to operate at any desirable frequency range, such as, for example, at frequencies within, above or below millimeter-wave and/or microwave frequency bands. In particular, when a coupling device or transmission medium includes a conductive element, the frequency of the guided electromagnetic waves that are carried by the coupling device and/or propagate along the transmission medium can be below the mean collision frequency of the electrons in the conductive element. Further, the frequency of the guided electromagnetic waves that are carried by the coupling device and/or propagate along the transmission medium can be a non-optical frequency, e.g. a radio frequency below the range of optical frequencies that begins at 1 THz.

As used herein, the term "antenna" can refer to a device that is part of a transmitting or receiving system to transmit/radiate or receive wireless signals.

In accordance with one or more embodiments, a method includes generating, by a waveguide system comprising a plurality of circuits, each with a radiating element, first electromagnetic waves, and directing, by the radiating elements of the plurality of circuits, instances of the first electromagnetic waves to an interface of a transmission medium to induce propagation of second electromagnetic waves without an electrical return path, the second electromagnetic waves having a non-fundamental wave mode and a non-optical operating frequency.

In accordance with one or more embodiments, a system can include an interface for receiving a signal, and a plurality of microwave transmitters for launching, according to the signal, instances of first electromagnetic waves having different phases to induce propagation of second electromagnetic waves at an interface of a transmission medium, the second electromagnetic waves having a non-fundamental wave mode and a non-optical operating frequency.

In accordance with one or more embodiments, a method includes generating, by a plurality of phase tunable transmitters, first electromagnetic waves, and directing, by a waveguide coupled to the plurality of phase tunable transmitters, instances of the first electromagnetic waves to an interface of a transmission medium for guiding propagation of second electromagnetic wave having a non-fundamental wave mode, a fundamental wave mode, or a combination thereof.

Referring now to FIG. **1**, a block diagram **100** illustrating an example, non-limiting embodiment of a guided wave communications system is shown. In operation, a transmission device **101** receives one or more communication signals **110** from a communication network or other communications device that includes data and generates guided waves **120** to convey the data via the transmission medium **125** to the transmission device **102**. The transmission device **102** receives the guided waves **120** and converts them to communication signals **112** that include the data for transmission to a communications network or other communications device. The guided waves **120** can be modulated to convey data via a modulation technique such as phase shift keying, frequency shift keying, quadrature amplitude modulation, amplitude modulation, multi-carrier modulation such as orthogonal frequency division multiplexing and via multiple access techniques such as frequency division multiplexing, time division multiplexing, code division multiplexing, multiplexing via differing wave propagation modes and via other modulation and access strategies.

The communication network or networks can include a wireless communication network such as a mobile data network, a cellular voice and data network, a wireless local area network (e.g., WiFi or an 802.xx network), a satellite communications network, a personal area network or other wireless network. The communication network or networks can also include a wired communication network such as a telephone network, an Ethernet network, a local area net-

work, a wide area network such as the Internet, a broadband access network, a cable network, a fiber optic network, or other wired network. The communication devices can include a network edge device, bridge device or home gateway, a set-top box, broadband modem, telephone adapter, access point, base station, or other fixed communication device, a mobile communication device such as an automotive gateway or automobile, laptop computer, tablet, smartphone, cellular telephone, or other communication device.

In an example embodiment, the guided wave communication system **100** can operate in a bi-directional fashion where transmission device **102** receives one or more communication signals **112** from a communication network or device that includes other data and generates guided waves **122** to convey the other data via the transmission medium **125** to the transmission device **101**. In this mode of operation, the transmission device **101** receives the guided waves **122** and converts them to communication signals **110** that include the other data for transmission to a communications network or device. The guided waves **122** can be modulated to convey data via a modulation technique such as phase shift keying, frequency shift keying, quadrature amplitude modulation, amplitude modulation, multi-carrier modulation such as orthogonal frequency division multiplexing and via multiple access techniques such as frequency division multiplexing, time division multiplexing, code division multiplexing, multiplexing via differing wave propagation modes and via other modulation and access strategies.

The transmission medium **125** can include a cable having at least one inner portion surrounded by a dielectric material such as an insulator or other dielectric cover, coating or other dielectric material, the dielectric material having an outer surface and a corresponding circumference. In an example embodiment, the transmission medium **125** operates as a single-wire transmission line to guide the transmission of an electromagnetic wave. When the transmission medium **125** is implemented as a single wire transmission system, it can include a wire. The wire can be insulated or uninsulated, and single-stranded or multi-stranded (e.g., braided). In other embodiments, the transmission medium **125** can contain conductors of other shapes or configurations including wire bundles, cables, rods, rails, pipes. In addition, the transmission medium **125** can include non-conductors such as dielectric pipes, rods, rails, or other dielectric members; combinations of conductors and dielectric materials, conductors without dielectric materials or other guided wave transmission media. It should be noted that the transmission medium **125** can otherwise include any of the transmission media previously discussed.

Further, as previously discussed, the guided waves **120** and **122** can be contrasted with radio transmissions over free space/air or conventional propagation of electrical power or signals through the conductor of a wire via an electrical circuit. In addition to the propagation of guided waves **120** and **122**, the transmission medium **125** may optionally contain one or more wires that propagate electrical power or other communication signals in a conventional manner as a part of one or more electrical circuits.

Referring now to FIG. **2**, a block diagram **200** illustrating an example, non-limiting embodiment of a transmission device is shown. The transmission device **101** or **102** includes a communications interface (I/F) **205**, a transceiver **210** and a coupler **220**.

In an example of operation, the communications interface **205** receives a communication signal **110** or **112** that includes data. In various embodiments, the communications interface **205** can include a wireless interface for receiving a wireless communication signal in accordance with a wireless standard protocol such as LTE or other cellular voice and data protocol, WiFi or an 802.11 protocol, WIMAX protocol, Ultra Wideband protocol, Bluetooth protocol, Zigbee protocol, a direct broadcast satellite (DBS) or other satellite communication protocol or other wireless protocol. In addition or in the alternative, the communications interface **205** includes a wired interface that operates in accordance with an Ethernet protocol, universal serial bus (USB) protocol, a data over cable service interface specification (DOCSIS) protocol, a digital subscriber line (DSL) protocol, a Firewire (IEEE 1394) protocol, or other wired protocol. In additional to standards-based protocols, the communications interface **205** can operate in conjunction with other wired or wireless protocol. In addition, the communications interface **205** can optionally operate in conjunction with a protocol stack that includes multiple protocol layers including a MAC protocol, transport protocol, application protocol, etc.

In an example of operation, the transceiver **210** generates an electromagnetic wave based on the communication signal **110** or **112** to convey the data. The electromagnetic wave has at least one carrier frequency and at least one corresponding wavelength. The carrier frequency can be within a millimeter-wave frequency band of 30 GHz-300 GHz, such as 60 GHz or a carrier frequency in the range of 30-40 GHz or a lower frequency band of 300 MHz-30 GHz in the microwave frequency range such as 26-30 GHz, 11 GHz, 6 GHz or 3 GHz, but it will be appreciated that other carrier frequencies are possible in other embodiments. In one mode of operation, the transceiver **210** merely upconverts the communications signal or signals **110** or **112** for transmission of the electromagnetic signal in the microwave or millimeter-wave band as a guided electromagnetic wave that is guided by or bound to the transmission medium **125**. In another mode of operation, the communications interface **205** either converts the communication signal **110** or **112** to a baseband or near baseband signal or extracts the data from the communication signal **110** or **112** and the transceiver **210** modulates a high-frequency carrier with the data, the baseband or near baseband signal for transmission. It should be appreciated that the transceiver **210** can modulate the data received via the communication signal **110** or **112** to preserve one or more data communication protocols of the communication signal **110** or **112** either by encapsulation in the payload of a different protocol or by simple frequency shifting. In the alternative, the transceiver **210** can otherwise translate the data received via the communication signal **110** or **112** to a protocol that is different from the data communication protocol or protocols of the communication signal **110** or **112**.

In an example of operation, the coupler **220** couples the electromagnetic wave to the transmission medium **125** as a guided electromagnetic wave to convey the communications signal or signals **110** or **112**. While the prior description has focused on the operation of the transceiver **210** as a transmitter, the transceiver **210** can also operate to receive electromagnetic waves that convey other data from the single wire transmission medium via the coupler **220** and to generate communications signals **110** or **112**, via communications interface **205** that includes the other data. Consider embodiments where an additional guided electromagnetic wave conveys other data that also propagates along the transmission medium **125**. The coupler **220** can also couple this additional electromagnetic wave from the transmission medium **125** to the transceiver **210** for reception.

The transmission device **101** or **102** includes an optional training controller **230**. In an example embodiment, the training controller **230** is implemented by a standalone processor or a processor that is shared with one or more other components of the transmission device **101** or **102**. The training controller **230** selects the carrier frequencies, modulation schemes and/or guided wave modes for the guided electromagnetic waves based on feedback data received by the transceiver **210** from at least one remote transmission device coupled to receive the guided electromagnetic wave.

In an example embodiment, a guided electromagnetic wave transmitted by a remote transmission device **101** or **102** conveys data that also propagates along the transmission medium **125**. The data from the remote transmission device **101** or **102** can be generated to include the feedback data. In operation, the coupler **220** also couples the guided electromagnetic wave from the transmission medium **125** and the transceiver receives the electromagnetic wave and processes the electromagnetic wave to extract the feedback data.

In an example embodiment, the training controller **230** operates based on the feedback data to evaluate a plurality of candidate frequencies, modulation schemes and/or transmission modes to select a carrier frequency, modulation scheme and/or transmission mode to enhance performance, such as throughput, signal strength, reduce propagation loss, etc.

Consider the following example: a transmission device **101** begins operation under control of the training controller **230** by sending a plurality of guided waves as test signals such as pilot waves or other test signals at a corresponding plurality of candidate frequencies and/or candidate modes directed to a remote transmission device **102** coupled to the transmission medium **125**. The guided waves can include, in addition or in the alternative, test data. The test data can indicate the particular candidate frequency and/or guide-wave mode of the signal. In an embodiment, the training controller **230** at the remote transmission device **102** receives the test signals and/or test data from any of the guided waves that were properly received and determines the best candidate frequency and/or guided wave mode, a set of acceptable candidate frequencies and/or guided wave modes, or a rank ordering of candidate frequencies and/or guided wave modes. This selection of candidate frequenc(ies) or/and guided-mode(s) are generated by the training controller **230** based on one or more optimizing criteria such as received signal strength, bit error rate, packet error rate, signal to noise ratio, propagation loss, etc. The training controller **230** generates feedback data that indicates the selection of candidate frequenc(ies) or/and guided wave mode(s) and sends the feedback data to the transceiver **210** for transmission to the transmission device **101**. The transmission device **101** and **102** can then communicate data with one another based on the selection of candidate frequenc(ies) or/and guided wave mode(s).

In other embodiments, the guided electromagnetic waves that contain the test signals and/or test data are reflected back, repeated back or otherwise looped back by the remote transmission device **102** to the transmission device **101** for reception and analysis by the training controller **230** of the transmission device **101** that initiated these waves. For example, the transmission device **101** can send a signal to the remote transmission device **102** to initiate a test mode where a physical reflector is switched on the line, a termination impedance is changed to cause reflections, a loop back mode is switched on to couple electromagnetic waves back to the source transmission device **102**, and/or a repeater mode is enabled to amplify and retransmit the electromagnetic waves back to the source transmission device **102**. The training controller **230** at the source transmission device **102** receives the test signals and/or test data from any of the guided waves that were properly received and determines selection of candidate frequenc(ies) or/and guided wave mode(s).

While the procedure above has been described in a start-up or initialization mode of operation, each transmission device **101** or **102** can send test signals, evaluate candidate frequencies or guided wave modes via non-test such as normal transmissions or otherwise evaluate candidate frequencies or guided wave modes at other times or continuously as well. In an example embodiment, the communication protocol between the transmission devices **101** and **102** can include an on-request or periodic test mode where either full testing or more limited testing of a subset of candidate frequencies and guided wave modes are tested and evaluated. In other modes of operation, the re-entry into such a test mode can be triggered by a degradation of performance due to a disturbance, weather conditions, etc. In an example embodiment, the receiver bandwidth of the transceiver **210** is either sufficiently wide or swept to receive all candidate frequencies or can be selectively adjusted by the training controller **230** to a training mode where the receiver bandwidth of the transceiver **210** is sufficiently wide or swept to receive all candidate frequencies.

Referring now to FIG. **3**, a graphical diagram **300** illustrating an example, non-limiting embodiment of an electromagnetic field distribution is shown. In this embodiment, a transmission medium **125** in air includes an inner conductor **301** and an insulating jacket **302** of dielectric material, as shown in cross section. The diagram **300** includes different gray-scales that represent differing electromagnetic field strengths generated by the propagation of the guided wave having an asymmetrical and non-fundamental guided wave mode.

In particular, the electromagnetic field distribution corresponds to a modal "sweet spot" that enhances guided electromagnetic wave propagation along an insulated transmission medium and reduces end-to-end transmission loss. In this particular mode, electromagnetic waves are guided by the transmission medium **125** to propagate along an outer surface of the transmission medium—in this case, the outer surface of the insulating jacket **302**. Electromagnetic waves are partially embedded in the insulator and partially radiating on the outer surface of the insulator. In this fashion, electromagnetic waves are "lightly" coupled to the insulator so as to enable electromagnetic wave propagation at long distances with low propagation loss.

As shown, the guided wave has a field structure that lies primarily or substantially outside of the transmission medium **125** that serves to guide the electromagnetic waves. The regions inside the conductor **301** have little or no field. Likewise regions inside the insulating jacket **302** have low field strength. The majority of the electromagnetic field strength is distributed in the lobes **304** at the outer surface of the insulating jacket **302** and in close proximity thereof. The presence of an asymmetric guided wave mode is shown by the high electromagnetic field strengths at the top and bottom of the outer surface of the insulating jacket **302** (in the orientation of the diagram)—as opposed to very small field strengths on the other sides of the insulating jacket **302**.

The example shown corresponds to a 38 GHz electromagnetic wave guided by a wire with a diameter of 1.1 cm and a dielectric insulation of thickness of 0.36 cm. Because the electromagnetic wave is guided by the transmission

medium **125** and the majority of the field strength is concentrated in the air outside of the insulating jacket **302** within a limited distance of the outer surface, the guided wave can propagate longitudinally down the transmission medium **125** with very low loss. In the example shown, this "limited distance" corresponds to a distance from the outer surface that is less than half the largest cross sectional dimension of the transmission medium **125**. In this case, the largest cross sectional dimension of the wire corresponds to the overall diameter of 1.82 cm, however, this value can vary with the size and shape of the transmission medium **125**. For example, should the transmission medium **125** be of a rectangular shape with a height of 0.3 cm and a width of 0.4 cm, the largest cross sectional dimension would be the diagonal of 0.5 cm and the corresponding limited distance would be 0.25 cm. The dimensions of the area containing the majority of the field strength also vary with the frequency, and in general, increase as carrier frequencies decrease.

It should also be noted that the components of a guided wave communication system, such as couplers and transmission media can have their own cut-off frequencies for each guided wave mode. The cut-off frequency generally sets forth the lowest frequency that a particular guided wave mode is designed to be supported by that particular component. In an example embodiment, the particular asymmetric mode of propagation shown is induced on the transmission medium **125** by an electromagnetic wave having a frequency that falls within a limited range (such as Fc to 2Fc) of the lower cut-off frequency Fc for this particular asymmetric mode. The lower cut-off frequency Fc is particular to the characteristics of transmission medium **125**. For embodiments as shown that include an inner conductor **301** surrounded by an insulating jacket **302**, this cutoff frequency can vary based on the dimensions and properties of the insulating jacket **302** and potentially the dimensions and properties of the inner conductor **301** and can be determined experimentally to have a desired mode pattern. It should be noted however, that similar effects can be found for a hollow dielectric or insulator without an inner conductor. In this case, the cutoff frequency can vary based on the dimensions and properties of the hollow dielectric or insulator.

At frequencies lower than the lower cut-off frequency, the asymmetric mode is difficult to induce in the transmission medium **125** and fails to propagate for all but trivial distances. As the frequency increases above the limited range of frequencies about the cut-off frequency, the asymmetric mode shifts more and more inward of the insulating jacket **302**. At frequencies much larger than the cut-off frequency, the field strength is no longer concentrated outside of the insulating jacket, but primarily inside of the insulating jacket **302**. While the transmission medium **125** provides strong guidance to the electromagnetic wave and propagation is still possible, ranges are more limited by increased losses due to propagation within the insulating jacket **302**—as opposed to the surrounding air.

Referring now to FIG. **4**, a graphical diagram **400** illustrating an example, non-limiting embodiment of an electromagnetic field distribution is shown. In particular, a cross section diagram **400**, similar to FIG. **3** is shown with common reference numerals used to refer to similar elements. The example shown corresponds to a 60 GHz wave guided by a wire with a diameter of 1.1 cm and a dielectric insulation of thickness of 0.36 cm. Because the frequency of the guided wave is above the limited range of the cut-off frequency of this particular asymmetric mode, much of the field strength has shifted inward of the insulating jacket **302**. In particular, the field strength is concentrated primarily inside of the insulating jacket **302**. While the transmission medium **125** provides strong guidance to the electromagnetic wave and propagation is still possible, ranges are more limited when compared with the embodiment of FIG. **3**, by increased losses due to propagation within the insulating jacket **302**.

Referring now to FIG. **5**A, a graphical diagram illustrating an example, non-limiting embodiment of a frequency response is shown. In particular, diagram **500** presents a graph of end-to-end loss (in dB) as a function of frequency, overlaid with electromagnetic field distributions **510**, **520** and **530** at three points for a 200 cm insulated medium voltage wire. The boundary between the insulator and the surrounding air is represented by reference numeral **525** in each electromagnetic field distribution.

As discussed in conjunction with FIG. **3**, an example of a desired asymmetric mode of propagation shown is induced on the transmission medium **125** by an electromagnetic wave having a frequency that falls within a limited range (such as Fc to 2Fc) of the lower cut-off frequency Fc of the transmission medium for this particular asymmetric mode. In particular, the electromagnetic field distribution **520** at 6 GHz falls within this modal "sweet spot" that enhances electromagnetic wave propagation along an insulated transmission medium and reduces end-to-end transmission loss. In this particular mode, guided waves are partially embedded in the insulator and partially radiating on the outer surface of the insulator. In this fashion, the electromagnetic waves are "lightly" coupled to the insulator so as to enable guided electromagnetic wave propagation at long distances with low propagation loss.

At lower frequencies represented by the electromagnetic field distribution **510** at 3 GHz, the asymmetric mode radiates more heavily generating higher propagation losses. At higher frequencies represented by the electromagnetic field distribution **530** at 9 GHz, the asymmetric mode shifts more and more inward of the insulating jacket providing too much absorption, again generating higher propagation losses.

Referring now to FIG. **5**B, a graphical diagram **550** illustrating example, non-limiting embodiments of a longitudinal cross-section of a transmission medium **125**, such as an insulated wire, depicting fields of guided electromagnetic waves at various operating frequencies is shown. As shown in diagram **556**, when the guided electromagnetic waves are at approximately the cutoff frequency (f_c) corresponding to the modal "sweet spot", the guided electromagnetic waves are loosely coupled to the insulated wire so that absorption is reduced, and the fields of the guided electromagnetic waves are bound sufficiently to reduce the amount radiated into the environment (e.g., air). Because absorption and radiation of the fields of the guided electromagnetic waves is low, propagation losses are consequently low, enabling the guided electromagnetic waves to propagate for longer distances.

As shown in diagram **554**, propagation losses increase when an operating frequency of the guide electromagnetic waves increases above about two-times the cutoff frequency (f_c)—or as referred to, above the range of the "sweet spot". More of the field strength of the electromagnetic wave is driven inside the insulating layer, increasing propagation losses. At frequencies much higher than the cutoff frequency (f_c) the guided electromagnetic waves are strongly bound to the insulated wire as a result of the fields emitted by the guided electromagnetic waves being concentrated in the insulation layer of the wire, as shown in diagram **552**. This

in turn raises propagation losses further due to absorption of the guided electromagnetic waves by the insulation layer. Similarly, propagation losses increase when the operating frequency of the guided electromagnetic waves is substantially below the cutoff frequency (f_c), as shown in diagram **558**. At frequencies much lower than the cutoff frequency (f_c) the guided electromagnetic waves are weakly (or nominally) bound to the insulated wire and thereby tend to radiate into the environment (e.g., air), which in turn, raises propagation losses due to radiation of the guided electromagnetic waves.

Referring now to FIG. **6**, a graphical diagram **600** illustrating an example, non-limiting embodiment of an electromagnetic field distribution is shown. In this embodiment, a transmission medium **602** is a bare wire, as shown in cross section. The diagram **300** includes different gray-scales that represent differing electromagnetic field strengths generated by the propagation of a guided wave having a symmetrical and fundamental guided wave mode at a single carrier frequency.

In this particular mode, electromagnetic waves are guided by the transmission medium **602** to propagate along an outer surface of the transmission medium—in this case, the outer surface of the bare wire. Electromagnetic waves are "lightly" coupled to the wire so as to enable electromagnetic wave propagation at long distances with low propagation loss. As shown, the guided wave has a field structure that lies substantially outside of the transmission medium **602** that serves to guide the electromagnetic waves. The regions inside the conductor **602** have little or no field.

Referring now to FIG. **7**, a block diagram **700** illustrating an example, non-limiting embodiment of an arc coupler is shown. In particular a coupling device is presented for use in a transmission device, such as transmission device **101** or **102** presented in conjunction with FIG. **1**. The coupling device includes an arc coupler **704** coupled to a transmitter circuit **712** and termination or damper **714**. The arc coupler **704** can be made of a dielectric material, or other low-loss insulator (e.g., Teflon, polyethylene, etc.), or made of a conducting (e.g., metallic, non-metallic, etc.) material, or any combination of the foregoing materials. As shown, the arc coupler **704** operates as a waveguide and has a wave **706** propagating as a guided wave about a waveguide surface of the arc coupler **704**. In the embodiment shown, at least a portion of the arc coupler **704** can be placed near a wire **702** or other transmission medium, (such as transmission medium **125**), in order to facilitate coupling between the arc coupler **704** and the wire **702** or other transmission medium, as described herein to launch the guided wave **708** on the wire. The arc coupler **704** can be placed such that a portion of the curved arc coupler **704** is tangential to, and parallel or substantially parallel to the wire **702**. The portion of the arc coupler **704** that is parallel to the wire can be an apex of the curve, or any point where a tangent of the curve is parallel to the wire **702**. When the arc coupler **704** is positioned or placed thusly, the wave **706** travelling along the arc coupler **704** couples, at least in part, to the wire **702**, and propagates as guided wave **708** around or about the wire surface of the wire **702** and longitudinally along the wire **702**. The guided wave **708** can be characterized as a surface wave or other electromagnetic wave that is guided by or bound to the wire **702** or other transmission medium.

A portion of the wave **706** that does not couple to the wire **702** propagates as a wave **710** along the arc coupler **704**. It will be appreciated that the arc coupler **704** can be configured and arranged in a variety of positions in relation to the wire **702** to achieve a desired level of coupling or non-coupling of the wave **706** to the wire **702**. For example, the curvature and/or length of the arc coupler **704** that is parallel or substantially parallel, as well as its separation distance (which can include zero separation distance in an embodiment), to the wire **702** can be varied without departing from example embodiments. Likewise, the arrangement of arc coupler **704** in relation to the wire **702** may be varied based upon considerations of the respective intrinsic characteristics (e.g., thickness, composition, electromagnetic properties, etc.) of the wire **702** and the arc coupler **704**, as well as the characteristics (e.g., frequency, energy level, etc.) of the waves **706** and **708**.

The guided wave **708** stays parallel or substantially parallel to the wire **702**, even as the wire **702** bends and flexes. Bends in the wire **702** can increase transmission losses, which are also dependent on wire diameters, frequency, and materials. If the dimensions of the arc coupler **704** are chosen for efficient power transfer, most of the power in the wave **706** is transferred to the wire **702**, with little power remaining in wave **710**. It will be appreciated that the guided wave **708** can still be multi-modal in nature (discussed herein), including having modes that are non-fundamental or asymmetric, while traveling along a path that is parallel or substantially parallel to the wire **702**, with or without a fundamental transmission mode. In an embodiment, non-fundamental or asymmetric modes can be utilized to minimize transmission losses and/or obtain increased propagation distances.

It is noted that the term parallel is generally a geometric construct which often is not exactly achievable in real systems. Accordingly, the term parallel as utilized in the subject disclosure represents an approximation rather than an exact configuration when used to describe embodiments disclosed in the subject disclosure. In an embodiment, substantially parallel can include approximations that are within 30 degrees of true parallel in all dimensions.

In an embodiment, the wave **706** can exhibit one or more wave propagation modes. The arc coupler modes can be dependent on the shape and/or design of the coupler **704**. The one or more arc coupler modes of wave **706** can generate, influence, or impact one or more wave propagation modes of the guided wave **708** propagating along wire **702**. It should be particularly noted however that the guided wave modes present in the guided wave **706** may be the same or different from the guided wave modes of the guided wave **708**. In this fashion, one or more guided wave modes of the guided wave **706** may not be transferred to the guided wave **708**, and further one or more guided wave modes of guided wave **708** may not have been present in guided wave **706**. It should also be noted that the cut-off frequency of the arc coupler **704** for a particular guided wave mode may be different than the cutoff frequency of the wire **702** or other transmission medium for that same mode. For example, while the wire **702** or other transmission medium may be operated slightly above its cutoff frequency for a particular guided wave mode, the arc coupler **704** may be operated well above its cut-off frequency for that same mode for low loss, slightly below its cut-off frequency for that same mode to, for example, induce greater coupling and power transfer, or some other point in relation to the arc coupler's cutoff frequency for that mode.

In an embodiment, the wave propagation modes on the wire **702** can be similar to the arc coupler modes since both waves **706** and **708** propagate about the outside of the arc coupler **704** and wire **702** respectively. In some embodiments, as the wave **706** couples to the wire **702**, the modes can change form, or new modes can be created or generated,

due to the coupling between the arc coupler **704** and the wire **702**. For example, differences in size, material, and/or impedances of the arc coupler **704** and wire **702** may create additional modes not present in the arc coupler modes and/or suppress some of the arc coupler modes. The wave propagation modes can comprise the fundamental transverse electromagnetic mode (Quasi-TEM_{00}), where only small electric and/or magnetic fields extend in the direction of propagation, and the electric and magnetic fields extend radially outwards while the guided wave propagates along the wire. This guided wave mode can be donut shaped, where few of the electromagnetic fields exist within the arc coupler **704** or wire **702**.

Waves **706** and **708** can comprise a fundamental TEM mode where the fields extend radially outwards, and also comprise other, non-fundamental (e.g., asymmetric, higher-level, etc.) modes. While particular wave propagation modes are discussed above, other wave propagation modes are likewise possible such as transverse electric (TE) and transverse magnetic (TM) modes, based on the frequencies employed, the design of the arc coupler **704**, the dimensions and composition of the wire **702**, as well as its surface characteristics, its insulation if present, the electromagnetic properties of the surrounding environment, etc. It should be noted that, depending on the frequency, the electrical and physical characteristics of the wire **702** and the particular wave propagation modes that are generated, guided wave **708** can travel along the conductive surface of an oxidized uninsulated wire, an unoxidized uninsulated wire, an insulated wire and/or along the insulating surface of an insulated wire.

In an embodiment, a diameter of the arc coupler **704** is smaller than the diameter of the wire **702**. For the millimeter-band wavelength being used, the arc coupler **704** supports a single waveguide mode that makes up wave **706**. This single waveguide mode can change as it couples to the wire **702** as guided wave **708**. If the arc coupler **704** were larger, more than one waveguide mode can be supported, but these additional waveguide modes may not couple to the wire **702** as efficiently, and higher coupling losses can result. However, in some alternative embodiments, the diameter of the arc coupler **704** can be equal to or larger than the diameter of the wire **702**, for example, where higher coupling losses are desirable or when used in conjunction with other techniques to otherwise reduce coupling losses (e.g., impedance matching with tapering, etc.).

In an embodiment, the wavelength of the waves **706** and **708** are comparable in size, or smaller than a circumference of the arc coupler **704** and the wire **702**. In an example, if the wire **702** has a diameter of 0.5 cm, and a corresponding circumference of around 1.5 cm, the wavelength of the transmission is around 1.5 cm or less, corresponding to a frequency of 70 GHz or greater. In another embodiment, a suitable frequency of the transmission and the carrier-wave signal is in the range of 30-100 GHz, perhaps around 30-60 GHz, and around 38 GHz in one example. In an embodiment, when the circumference of the arc coupler **704** and wire **702** is comparable in size to, or greater, than a wavelength of the transmission, the waves **706** and **708** can exhibit multiple wave propagation modes including fundamental and/or non-fundamental (symmetric and/or asymmetric) modes that propagate over sufficient distances to support various communication systems described herein. The waves **706** and **708** can therefore comprise more than one type of electric and magnetic field configuration. In an embodiment, as the guided wave **708** propagates down the wire **702**, the electrical and magnetic field configurations will remain the same from end to end of the wire **702**. In other embodiments, as the guided wave **708** encounters interference (distortion or obstructions) or loses energy due to transmission losses or scattering, the electric and magnetic field configurations can change as the guided wave **708** propagates down wire **702**.

In an embodiment, the arc coupler **704** can be composed of nylon, Teflon, polyethylene, a polyamide, or other plastics. In other embodiments, other dielectric materials are possible. The wire surface of wire **702** can be metallic with either a bare metallic surface, or can be insulated using plastic, dielectric, insulator or other coating, jacket or sheathing. In an embodiment, a dielectric or otherwise non-conducting/insulated waveguide can be paired with either a bare/metallic wire or insulated wire. In other embodiments, a metallic and/or conductive waveguide can be paired with a bare/metallic wire or insulated wire. In an embodiment, an oxidation layer on the bare metallic surface of the wire **702** (e.g., resulting from exposure of the bare metallic surface to oxygen/air) can also provide insulating or dielectric properties similar to those provided by some insulators or sheathings.

It is noted that the graphical representations of waves **706**, **708** and **710** are presented merely to illustrate the principles that wave **706** induces or otherwise launches a guided wave **708** on a wire **702** that operates, for example, as a single wire transmission line. Wave **710** represents the portion of wave **706** that remains on the arc coupler **704** after the generation of guided wave **708**. The actual electric and magnetic fields generated as a result of such wave propagation may vary depending on the frequencies employed, the particular wave propagation mode or modes, the design of the arc coupler **704**, the dimensions and composition of the wire **702**, as well as its surface characteristics, its optional insulation, the electromagnetic properties of the surrounding environment, etc.

It is noted that arc coupler **704** can include a termination circuit or damper **714** at the end of the arc coupler **704** that can absorb leftover radiation or energy from wave **710**. The termination circuit or damper **714** can prevent and/or minimize the leftover radiation or energy from wave **710** reflecting back toward transmitter circuit **712**. In an embodiment, the termination circuit or damper **714** can include termination resistors, and/or other components that perform impedance matching to attenuate reflection. In some embodiments, if the coupling efficiencies are high enough, and/or wave **710** is sufficiently small, it may not be necessary to use a termination circuit or damper **714**. For the sake of simplicity, these transmitter **712** and termination circuits or dampers **714** may not be depicted in the other figures, but in those embodiments, transmitter and termination circuits or dampers may possibly be used.

Further, while a single arc coupler **704** is presented that generates a single guided wave **708**, multiple arc couplers **704** placed at different points along the wire **702** and/or at different azimuthal orientations about the wire can be employed to generate and receive multiple guided waves **708** at the same or different frequencies, at the same or different phases, at the same or different wave propagation modes.

FIG. **8**, a block diagram **800** illustrating an example, non-limiting embodiment of an arc coupler is shown. In the embodiment shown, at least a portion of the coupler **704** can be placed near a wire **702** or other transmission medium, (such as transmission medium **125**), in order to facilitate coupling between the arc coupler **704** and the wire **702** or other transmission medium, to extract a portion of the

guided wave **806** as a guided wave **808** as described herein. The arc coupler **704** can be placed such that a portion of the curved arc coupler **704** is tangential to, and parallel or substantially parallel to the wire **702**. The portion of the arc coupler **704** that is parallel to the wire can be an apex of the curve, or any point where a tangent of the curve is parallel to the wire **702**. When the arc coupler **704** is positioned or placed thusly, the wave **806** travelling along the wire **702** couples, at least in part, to the arc coupler **704**, and propagates as guided wave **808** along the arc coupler **704** to a receiving device (not expressly shown). A portion of the wave **806** that does not couple to the arc coupler propagates as wave **810** along the wire **702** or other transmission medium.

In an embodiment, the wave **806** can exhibit one or more wave propagation modes. The arc coupler modes can be dependent on the shape and/or design of the coupler **704**. The one or more modes of guided wave **806** can generate, influence, or impact one or more guide-wave modes of the guided wave **808** propagating along the arc coupler **704**. It should be particularly noted however that the guided wave modes present in the guided wave **806** may be the same or different from the guided wave modes of the guided wave **808**. In this fashion, one or more guided wave modes of the guided wave **806** may not be transferred to the guided wave **808**, and further one or more guided wave modes of guided wave **808** may not have been present in guided wave **806**.

Referring now to FIG. **9**A, a block diagram **900** illustrating an example, non-limiting embodiment of a stub coupler is shown. In particular a coupling device that includes stub coupler **904** is presented for use in a transmission device, such as transmission device **101** or **102** presented in conjunction with FIG. **1**. The stub coupler **904** can be made of a dielectric material, or other low-loss insulator (e.g., Teflon, polyethylene and etc.), or made of a conducting (e.g., metallic, non-metallic, etc.) material, or any combination of the foregoing materials. As shown, the stub coupler **904** operates as a waveguide and has a wave **906** propagating as a guided wave about a waveguide surface of the stub coupler **904**. In the embodiment shown, at least a portion of the stub coupler **904** can be placed near a wire **702** or other transmission medium, (such as transmission medium **125**), in order to facilitate coupling between the stub coupler **904** and the wire **702** or other transmission medium, as described herein to launch the guided wave **908** on the wire.

In an embodiment, the stub coupler **904** is curved, and an end of the stub coupler **904** can be tied, fastened, or otherwise mechanically coupled to a wire **702**. When the end of the stub coupler **904** is fastened to the wire **702**, the end of the stub coupler **904** is parallel or substantially parallel to the wire **702**. Alternatively, another portion of the dielectric waveguide beyond an end can be fastened or coupled to wire **702** such that the fastened or coupled portion is parallel or substantially parallel to the wire **702**. The fastener **910** can be a nylon cable tie or other type of non-conducting/dielectric material that is either separate from the stub coupler **904** or constructed as an integrated component of the stub coupler **904**. The stub coupler **904** can be adjacent to the wire **702** without surrounding the wire **702**.

Like the arc coupler **704** described in conjunction with FIG. **7**, when the stub coupler **904** is placed with the end parallel to the wire **702**, the guided wave **906** travelling along the stub coupler **904** couples to the wire **702**, and propagates as guided wave **908** about the wire surface of the wire **702**. In an example embodiment, the guided wave **908** can be characterized as a surface wave or other electromagnetic wave.

It is noted that the graphical representations of waves **906** and **908** are presented merely to illustrate the principles that wave **906** induces or otherwise launches a guided wave **908** on a wire **702** that operates, for example, as a single wire transmission line. The actual electric and magnetic fields generated as a result of such wave propagation may vary depending on one or more of the shape and/or design of the coupler, the relative position of the dielectric waveguide to the wire, the frequencies employed, the design of the stub coupler **904**, the dimensions and composition of the wire **702**, as well as its surface characteristics, its optional insulation, the electromagnetic properties of the surrounding environment, etc.

In an embodiment, an end of stub coupler **904** can taper towards the wire **702** in order to increase coupling efficiencies. Indeed, the tapering of the end of the stub coupler **904** can provide impedance matching to the wire **702** and reduce reflections, according to an example embodiment of the subject disclosure. For example, an end of the stub coupler **904** can be gradually tapered in order to obtain a desired level of coupling between waves **906** and **908** as illustrated in FIG. **9**A.

In an embodiment, the fastener **910** can be placed such that there is a short length of the stub coupler **904** between the fastener **910** and an end of the stub coupler **904**. Maximum coupling efficiencies are realized in this embodiment when the length of the end of the stub coupler **904** that is beyond the fastener **910** is at least several wavelengths long for whatever frequency is being transmitted.

Turning now to FIG. **9**B, a diagram **950** illustrating an example, non-limiting embodiment of an electromagnetic distribution in accordance with various aspects described herein is shown. In particular, an electromagnetic distribution is presented in two dimensions for a transmission device that includes coupler **952**, shown in an example stub coupler constructed of a dielectric material. The coupler **952** couples an electromagnetic wave for propagation as a guided wave along an outer surface of a wire **702** or other transmission medium.

The coupler **952** guides the electromagnetic wave to a junction at xo via a symmetrical guided wave mode. While some of the energy of the electromagnetic wave that propagates along the coupler **952** is outside of the coupler **952**, the majority of the energy of this electromagnetic wave is contained within the coupler **952**. The junction at x_0 couples the electromagnetic wave to the wire **702** or other transmission medium at an azimuthal angle corresponding to the bottom of the transmission medium. This coupling induces an electromagnetic wave that is guided to propagate along the outer surface of the wire **702** or other transmission medium via at least one guided wave mode in direction **956**. The majority of the energy of the guided electromagnetic wave is outside or, but in close proximity to the outer surface of the wire **702** or other transmission medium. In the example shown, the junction at x_0 forms an electromagnetic wave that propagates via both a symmetrical mode and at least one asymmetrical surface mode, such as the first order mode presented in conjunction with FIG. **3**, that skims the surface of the wire **702** or other transmission medium.

It is noted that the graphical representations of guided waves are presented merely to illustrate an example of guided wave coupling and propagation. The actual electric and magnetic fields generated as a result of such wave propagation may vary depending on the frequencies employed, the design and/or configuration of the coupler **952**, the dimensions and composition of the wire **702** or other transmission medium, as well as its surface character-

istics, its insulation if present, the electromagnetic properties of the surrounding environment, etc.

Turning now to FIG. **10**A, illustrated is a block diagram **1000** of an example, non-limiting embodiment of a coupler and transceiver system in accordance with various aspects described herein. The system is an example of transmission device **101** or **102**. In particular, the communication interface **1008** is an example of communications interface **205**, the stub coupler **1002** is an example of coupler **220**, and the transmitter/receiver device **1006**, diplexer **1016**, power amplifier **1014**, low noise amplifier **1018**, frequency mixers **1010** and **1020** and local oscillator **1012** collectively form an example of transceiver **210**.

In operation, the transmitter/receiver device **1006** launches and receives waves (e.g., guided wave **1004** onto stub coupler **1002**). The guided waves **1004** can be used to transport signals received from and sent to a host device, base station, mobile devices, a building or other device by way of a communications interface **1008**. The communications interface **1008** can be an integral part of system **1000**. Alternatively, the communications interface **1008** can be tethered to system **1000**. The communications interface **1008** can comprise a wireless interface for interfacing to the host device, base station, mobile devices, a building or other device utilizing any of various wireless signaling protocols (e.g., LTE, WiFi, WiMAX, IEEE 802.xx, etc.) including an infrared protocol such as an infrared data association (IrDA) protocol or other line of sight optical protocol. The communications interface **1008** can also comprise a wired interface such as a fiber optic line, coaxial cable, twisted pair, category 5 (CAT-5) cable or other suitable wired or optical mediums for communicating with the host device, base station, mobile devices, a building or other device via a protocol such as an Ethernet protocol, universal serial bus (USB) protocol, a data over cable service interface specification (DOCSIS) protocol, a digital subscriber line (DSL) protocol, a Firewire (IEEE 1394) protocol, or other wired or optical protocol. For embodiments where system **1000** functions as a repeater, the communications interface **1008** may not be necessary.

The output signals (e.g., Tx) of the communications interface **1008** can be combined with a carrier wave (e.g., millimeter-wave carrier wave) generated by a local oscillator **1012** at frequency mixer **1010**. Frequency mixer **1010** can use heterodyning techniques or other frequency shifting techniques to frequency shift the output signals from communications interface **1008**. For example, signals sent to and from the communications interface **1008** can be modulated signals such as orthogonal frequency division multiplexed (OFDM) signals formatted in accordance with a Long-Term Evolution (LTE) wireless protocol or other wireless 3G, 4G, 5G or higher voice and data protocol, a Zigbee, WIMAX, UltraWideband or IEEE 802.11 wireless protocol; a wired protocol such as an Ethernet protocol, universal serial bus (USB) protocol, a data over cable service interface specification (DOCSIS) protocol, a digital subscriber line (DSL) protocol, a Firewire (IEEE 1394) protocol or other wired or wireless protocol. In an example embodiment, this frequency conversion can be done in the analog domain, and as a result, the frequency shifting can be done without regard to the type of communications protocol used by a base station, mobile devices, or in-building devices. As new communications technologies are developed, the communications interface **1008** can be upgraded (e.g., updated with software, firmware, and/or hardware) or replaced and the frequency shifting and transmission apparatus can remain, simplifying upgrades. The carrier wave can then be sent to a power amplifier ("PA") **1014** and can be transmitted via the transmitter receiver device **1006** via the diplexer **1016**.

Signals received from the transmitter/receiver device **1006** that are directed towards the communications interface **1008** can be separated from other signals via diplexer **1016**. The received signal can then be sent to low noise amplifier ("LNA") **1018** for amplification. A frequency mixer **1020**, with help from local oscillator **1012** can downshift the received signal (which is in the millimeter-wave band or around 38 GHz in some embodiments) to the native frequency. The communications interface **1008** can then receive the transmission at an input port (Rx).

In an embodiment, transmitter/receiver device **1006** can include a cylindrical or non-cylindrical metal (which, for example, can be hollow in an embodiment, but not necessarily drawn to scale) or other conducting or non-conducting waveguide and an end of the stub coupler **1002** can be placed in or in proximity to the waveguide or the transmitter/receiver device **1006** such that when the transmitter/receiver device **1006** generates a transmission, the guided wave couples to stub coupler **1002** and propagates as a guided wave **1004** about the waveguide surface of the stub coupler **1002**. In some embodiments, the guided wave **1004** can propagate in part on the outer surface of the stub coupler **1002** and in part inside the stub coupler **1002**. In other embodiments, the guided wave **1004** can propagate substantially or completely on the outer surface of the stub coupler **1002**. In yet other embodiments, the guided wave **1004** can propagate substantially or completely inside the stub coupler **1002**. In this latter embodiment, the guided wave **1004** can radiate at an end of the stub coupler **1002** (such as the tapered end shown in FIG. **4**) for coupling to a transmission medium such as a wire **702** of FIG. **7**. Similarly, if guided wave **1004** is incoming (coupled to the stub coupler **1002** from a wire **702**), guided wave **1004** then enters the transmitter/receiver device **1006** and couples to the cylindrical waveguide or conducting waveguide. While transmitter/receiver device **1006** is shown to include a separate waveguide—an antenna, cavity resonator, klystron, magnetron, travelling wave tube, or other radiating element can be employed to induce a guided wave on the coupler **1002**, with or without the separate waveguide.

In an embodiment, stub coupler **1002** can be wholly constructed of a dielectric material (or another suitable insulating material), without any metallic or otherwise conducting materials therein. Stub coupler **1002** can be composed of nylon, Teflon, polyethylene, a polyamide, other plastics, or other materials that are non-conducting and suitable for facilitating transmission of electromagnetic waves at least in part on an outer surface of such materials. In another embodiment, stub coupler **1002** can include a core that is conducting/metallic, and have an exterior dielectric surface. Similarly, a transmission medium that couples to the stub coupler **1002** for propagating electromagnetic waves induced by the stub coupler **1002** or for supplying electromagnetic waves to the stub coupler **1002** can, in addition to being a bare or insulated wire, be wholly constructed of a dielectric material (or another suitable insulating material), without any metallic or otherwise conducting materials therein.

It is noted that although FIG. **10**A shows that the opening of transmitter receiver device **1006** is much wider than the stub coupler **1002**, this is not to scale, and that in other embodiments the width of the stub coupler **1002** is comparable or slightly smaller than the opening of the hollow waveguide. It is also not shown, but in an embodiment, an end of the coupler **1002** that is inserted into the transmitter/

receiver device **1006** tapers down in order to reduce reflection and increase coupling efficiencies.

Before coupling to the stub coupler **1002**, the one or more waveguide modes of the guided wave generated by the transmitter/receiver device **1006** can couple to the stub coupler **1002** to induce one or more wave propagation modes of the guided wave **1004**. The wave propagation modes of the guided wave **1004** can be different than the hollow metal waveguide modes due to the different characteristics of the hollow metal waveguide and the dielectric waveguide. For instance, wave propagation modes of the guided wave **1004** can comprise the fundamental transverse electromagnetic mode (Quasi-TEM_{00}), where only small electrical and/or magnetic fields extend in the direction of propagation, and the electric and magnetic fields extend radially outwards from the stub coupler **1002** while the guided waves propagate along the stub coupler **1002**. The fundamental transverse electromagnetic mode wave propagation mode may or may not exist inside a waveguide that is hollow. Therefore, the hollow metal waveguide modes that are used by transmitter/receiver device **1006** are waveguide modes that can couple effectively and efficiently to wave propagation modes of stub coupler **1002**.

It will be appreciated that other constructs or combinations of the transmitter/receiver device **1006** and stub coupler **1002** are possible. For example, a stub coupler **1002'** can be placed tangentially or in parallel (with or without a gap) with respect to an outer surface of the hollow metal waveguide of the transmitter/receiver device **1006'** (corresponding circuitry not shown) as depicted by reference **1000'** of FIG. **10**B. In another embodiment, not shown by reference **1000'**, the stub coupler **1002'** can be placed inside the hollow metal waveguide of the transmitter/receiver device **1006'** without an axis of the stub coupler **1002'** being coaxially aligned with an axis of the hollow metal waveguide of the transmitter/receiver device **1006'**. In either of these embodiments, the guided wave generated by the transmitter/receiver device **1006'** can couple to a surface of the stub coupler **1002'** to induce one or more wave propagation modes of the guided wave **1004'** on the stub coupler **1002'** including a fundamental mode (e.g., a symmetric mode) and/or a non-fundamental mode (e.g., asymmetric mode).

In one embodiment, the guided wave **1004'** can propagate in part on the outer surface of the stub coupler **1002'** and in part inside the stub coupler **1002'**. In another embodiment, the guided wave **1004'** can propagate substantially or completely on the outer surface of the stub coupler **1002'**. In yet other embodiments, the guided wave **1004'** can propagate substantially or completely inside the stub coupler **1002'**. In this latter embodiment, the guided wave **1004'** can radiate at an end of the stub coupler **1002'** (such as the tapered end shown in FIG. **9**) for coupling to a transmission medium such as a wire **702** of FIG. **9**.

It will be further appreciated that other constructs the transmitter/receiver device **1006** are possible. For example, a hollow metal waveguide of a transmitter/receiver device **1006"** (corresponding circuitry not shown), depicted in FIG. **10**B as reference **1000"**, can be placed tangentially or in parallel (with or without a gap) with respect to an outer surface of a transmission medium such as the wire **702** of FIG. **4** without the use of the stub coupler **1002**. In this embodiment, the guided wave generated by the transmitter/receiver device **1006"** can couple to a surface of the wire **702** to induce one or more wave propagation modes of a guided wave **908** on the wire **702** including a fundamental mode (e.g., a symmetric mode) and/or a non-fundamental mode (e.g., asymmetric mode). In another embodiment, the wire **702** can be positioned inside a hollow metal waveguide of a transmitter/receiver device **1006'** (corresponding circuitry not shown) so that an axis of the wire **702** is coaxially (or not coaxially) aligned with an axis of the hollow metal waveguide without the use of the stub coupler **1002**—see FIG. **10**B reference **1000'"**. In this embodiment, the guided wave generated by the transmitter/receiver device **1006'"** can couple to a surface of the wire **702** to induce one or more wave propagation modes of a guided wave **908** on the wire including a fundamental mode (e.g., a symmetric mode) and/or a non-fundamental mode (e.g., asymmetric mode).

In the embodiments of **1000"** and **1000'"**, for a wire **702** having an insulated outer surface, the guided wave **908** can propagate in part on the outer surface of the insulator and in part inside the insulator. In embodiments, the guided wave **908** can propagate substantially or completely on the outer surface of the insulator, or substantially or completely inside the insulator. In the embodiments of **1000"** and **1000'"**, for a wire **702** that is a bare conductor, the guided wave **908** can propagate in part on the outer surface of the conductor and in part inside the conductor. In another embodiment, the guided wave **908** can propagate substantially or completely on the outer surface of the conductor.

Referring now to FIG. **11**, a block diagram **1100** illustrating an example, non-limiting embodiment of a dual stub coupler is shown. In particular, a dual coupler design is presented for use in a transmission device, such as transmission device **101** or **102** presented in conjunction with FIG. **1**. In an embodiment, two or more couplers (such as the stub couplers **1104** and **1106**) can be positioned around a wire **1102** in order to receive guided wave **1108**. In an embodiment, one coupler is enough to receive the guided wave **1108**. In that case, guided wave **1108** couples to coupler **1104** and propagates as guided wave **1110**. If the field structure of the guided wave **1108** oscillates or undulates around the wire **1102** due to the particular guided wave mode(s) or various outside factors, then coupler **1106** can be placed such that guided wave **1108** couples to coupler **1106**. In some embodiments, four or more couplers can be placed around a portion of the wire **1102**, e.g., at 90 degrees or another spacing with respect to each other, in order to receive guided waves that may oscillate or rotate around the wire **1102**, that have been induced at different azimuthal orientations or that have non-fundamental or higher order modes that, for example, have lobes and/or nulls or other asymmetries that are orientation dependent. However, it will be appreciated that there may be less than or more than four couplers placed around a portion of the wire **1102** without departing from example embodiments.

It should be noted that while couplers **1106** and **1104** are illustrated as stub couplers, any other of the coupler designs described herein including arc couplers, antenna or horn couplers, magnetic couplers, etc., could likewise be used. It will also be appreciated that while some example embodiments have presented a plurality of couplers around at least a portion of a wire **1102**, this plurality of couplers can also be considered as part of a single coupler system having multiple coupler subcomponents. For example, two or more couplers can be manufactured as single system that can be installed around a wire in a single installation such that the couplers are either pre-positioned or adjustable relative to each other (either manually or automatically with a controllable mechanism such as a motor or other actuator) in accordance with the single system.

Receivers coupled to couplers **1106** and **1104** can use diversity combining to combine signals received from both couplers **1106** and **1104** in order to maximize the signal

quality. In other embodiments, if one or the other of the couplers **1104** and **1106** receive a transmission that is above a predetermined threshold, receivers can use selection diversity when deciding which signal to use. Further, while reception by a plurality of couplers **1106** and **1104** is illustrated, transmission by couplers **1106** and **1104** in the same configuration can likewise take place. In particular, a wide range of multi-input multi-output (MIMO) transmission and reception techniques can be employed for transmissions where a transmission device, such as transmission device **101** or **102** presented in conjunction with FIG. **1** includes multiple transceivers and multiple couplers.

It is noted that the graphical representations of waves **1108** and **1110** are presented merely to illustrate the principles that guided wave **1108** induces or otherwise launches a wave **1110** on a coupler **1104**. The actual electric and magnetic fields generated as a result of such wave propagation may vary depending on the frequencies employed, the design of the coupler **1104**, the dimensions and composition of the wire **1102**, as well as its surface characteristics, its insulation if any, the electromagnetic properties of the surrounding environment, etc.

Referring now to FIG. **12**, a block diagram **1200** illustrating an example, non-limiting embodiment of a repeater system is shown. In particular, a repeater device **1210** is presented for use in a transmission device, such as transmission device **101** or **102** presented in conjunction with FIG. **1**. In this system, two couplers **1204** and **1214** can be placed near a wire **1202** or other transmission medium such that guided waves **1205** propagating along the wire **1202** are extracted by coupler **1204** as wave **1206** (e.g. as a guided wave), and then are boosted or repeated by repeater device **1210** and launched as a wave **1216** (e.g. as a guided wave) onto coupler **1214**. The wave **1216** can then be launched on the wire **1202** and continue to propagate along the wire **1202** as a guided wave **1217**. In an embodiment, the repeater device **1210** can receive at least a portion of the power utilized for boosting or repeating through magnetic coupling with the wire **1202**, for example, when the wire **1202** is a power line or otherwise contains a power-carrying conductor. It should be noted that while couplers **1204** and **1214** are illustrated as stub couplers, any other of the coupler designs described herein including arc couplers, antenna or horn couplers, magnetic couplers, or the like, could likewise be used.

In some embodiments, repeater device **1210** can repeat the transmission associated with wave **1206**, and in other embodiments, repeater device **1210** can include a communications interface **205** that extracts data or other signals from the wave **1206** for supplying such data or signals to another network and/or one or more other devices as communication signals **110** or **112** and/or receiving communication signals **110** or **112** from another network and/or one or more other devices and launch guided wave **1216** having embedded therein the received communication signals **110** or **112**. In a repeater configuration, receiver waveguide **1208** can receive the wave **1206** from the coupler **1204** and transmitter waveguide **1212** can launch guided wave **1216** onto coupler **1214** as guided wave **1217**. Between receiver waveguide **1208** and transmitter waveguide **1212**, the signal embedded in guided wave **1206** and/or the guided wave **1216** itself can be amplified to correct for signal loss and other inefficiencies associated with guided wave communications or the signal can be received and processed to extract the data contained therein and regenerated for transmission. In an embodiment, the receiver waveguide **1208** can be configured to extract data from the signal, process the data to correct for data errors utilizing for example error correcting codes, and regenerate an updated signal with the corrected data. The transmitter waveguide **1212** can then transmit guided wave **1216** with the updated signal embedded therein. In an embodiment, a signal embedded in guided wave **1206** can be extracted from the transmission and processed for communication with another network and/or one or more other devices via communications interface **205** as communication signals **110** or **112**. Similarly, communication signals **110** or **112** received by the communications interface **205** can be inserted into a transmission of guided wave **1216** that is generated and launched onto coupler **1214** by transmitter waveguide **1212**.

It is noted that although FIG. **12** shows guided wave transmissions **1206** and **1216** entering from the left and exiting to the right respectively, this is merely a simplification and is not intended to be limiting. In other embodiments, receiver waveguide **1208** and transmitter waveguide **1212** can also function as transmitters and receivers respectively, allowing the repeater device **1210** to be bi-directional.

In an embodiment, repeater device **1210** can be placed at locations where there are discontinuities or obstacles on the wire **1202** or other transmission medium. In the case where the wire **1202** is a power line, these obstacles can include transformers, connections, utility poles, and other such power line devices. The repeater device **1210** can help the guided (e.g., surface) waves jump over these obstacles on the line and boost the transmission power at the same time. In other embodiments, a coupler can be used to jump over the obstacle without the use of a repeater device. In that embodiment, both ends of the coupler can be tied or fastened to the wire, thus providing a path for the guided wave to travel without being blocked by the obstacle.

Turning now to FIG. **13**, illustrated is a block diagram **1300** of an example, non-limiting embodiment of a bidirectional repeater in accordance with various aspects described herein. In particular, a bidirectional repeater device **1306** is presented for use in a transmission device, such as transmission device **101** or **102** presented in conjunction with FIG. **1**. It should be noted that while the couplers are illustrated as stub couplers, any other of the coupler designs described herein including arc couplers, antenna or horn couplers, magnetic couplers, or the like, could likewise be used. The bidirectional repeater **1306** can employ diversity paths in the case of when two or more wires or other transmission media are present. Since guided wave transmissions have different transmission efficiencies and coupling efficiencies for transmission medium of different types such as insulated wires, un-insulated wires or other types of transmission media and further, if exposed to the elements, can be affected by weather, and other atmospheric conditions, it can be advantageous to selectively transmit on different transmission media at certain times. In various embodiments, the various transmission media can be designated as a primary, secondary, tertiary, etc. whether or not such designation indicates a preference of one transmission medium over another.

In the embodiment shown, the transmission media include an insulated or uninsulated wire **1302** and an insulated or uninsulated wire **1304** (referred to herein as wires **1302** and **1304**, respectively). The repeater device **1306** uses a receiver coupler **1308** to receive a guided wave traveling along wire **1302** and repeats the transmission using transmitter waveguide **1310** as a guided wave along wire **1304**. In other embodiments, repeater device **1306** can switch from the wire **1304** to the wire **1302**, or can repeat the transmissions along the same paths. Repeater device **1306** can

include sensors, or be in communication with sensors (or a network management system **1601** depicted in FIG. **16**A) that indicate conditions that can affect the transmission. Based on the feedback received from the sensors, the repeater device **1306** can make the determination about whether to keep the transmission along the same wire, or transfer the transmission to the other wire.

Turning now to FIG. **14**, illustrated is a block diagram **1400** illustrating an example, non-limiting embodiment of a bidirectional repeater system. In particular, a bidirectional repeater system is presented for use in a transmission device, such as transmission device **101** or **102** presented in conjunction with FIG. **1**. The bidirectional repeater system includes waveguide coupling devices **1402** and **1404** that receive and transmit transmissions from other coupling devices located in a distributed antenna system or backhaul system.

In various embodiments, waveguide coupling device **1402** can receive a transmission from another waveguide coupling device, wherein the transmission has a plurality of subcarriers. Diplexer **1406** can separate the transmission from other transmissions, and direct the transmission to low-noise amplifier ("LNA") **1408**. A frequency mixer **1428**, with help from a local oscillator **1412**, can downshift the transmission (which is in the millimeter-wave band or around 38 GHz in some embodiments) to a lower frequency, such as a cellular band (~1.9 GHz) for a distributed antenna system, a native frequency, or other frequency for a backhaul system. An extractor (or demultiplexer) **1432** can extract the signal on a subcarrier and direct the signal to an output component **1422** for optional amplification, buffering or isolation by power amplifier **1424** for coupling to communications interface **205**. The communications interface **205** can further process the signals received from the power amplifier **1424** or otherwise transmit such signals over a wireless or wired interface to other devices such as a base station, mobile devices, a building, etc. For the signals that are not being extracted at this location, extractor **1432** can redirect them to another frequency mixer **1436**, where the signals are used to modulate a carrier wave generated by local oscillator **1414**. The carrier wave, with its subcarriers, is directed to a power amplifier ("PA") **1416** and is retransmitted by waveguide coupling device **1404** to another system, via diplexer **1420**.

An LNA **1426** can be used to amplify, buffer or isolate signals that are received by the communication interface **205** and then send the signal to a multiplexer **1434** which merges the signal with signals that have been received from waveguide coupling device **1404**. The signals received from coupling device **1404** have been split by diplexer **1420**, and then passed through LNA **1418**, and downshifted in frequency by frequency mixer **1438**. When the signals are combined by multiplexer **1434**, they are upshifted in frequency by frequency mixer **1430**, and then boosted by PA **1410**, and transmitted to another system by waveguide coupling device **1402**. In an embodiment bidirectional repeater system can be merely a repeater without the output device **1422**. In this embodiment, the multiplexer **1434** would not be utilized and signals from LNA **1418** would be directed to mixer **1430** as previously described. It will be appreciated that in some embodiments, the bidirectional repeater system could also be implemented using two distinct and separate unidirectional repeaters. In an alternative embodiment, a bidirectional repeater system could also be a booster or otherwise perform retransmissions without downshifting and upshifting. Indeed in example embodiment, the retransmissions can be based upon receiving a signal or guided wave and performing some signal or guided wave processing or reshaping, filtering, and/or amplification, prior to retransmission of the signal or guided wave.

Referring now to FIG. **15**, a block diagram **1500** illustrating an example, non-limiting embodiment of a guided wave communications system is shown. This diagram depicts an exemplary environment in which a guided wave communication system, such as the guided wave communication system presented in conjunction with FIG. **1**, can be used.

To provide network connectivity to additional base station devices, a backhaul network that links the communication cells (e.g., microcells and macrocells) to network devices of a core network correspondingly expands. Similarly, to provide network connectivity to a distributed antenna system, an extended communication system that links base station devices and their distributed antennas is desirable. A guided wave communication system **1500** such as shown in FIG. **15** can be provided to enable alternative, increased or additional network connectivity and a waveguide coupling system can be provided to transmit and/or receive guided wave (e.g., surface wave) communications on a transmission medium such as a wire that operates as a single-wire transmission line (e.g., a utility line), and that can be used as a waveguide and/or that otherwise operates to guide the transmission of an electromagnetic wave.

The guided wave communication system **1500** can comprise a first instance of a distribution system **1550** that includes one or more base station devices (e.g., base station device **1504**) that are communicably coupled to a central office **1501** and/or a macrocell site **1502**. Base station device **1504** can be connected by a wired (e.g., fiber and/or cable), or by a wireless (e.g., microwave wireless) connection to the macrocell site **1502** and the central office **1501**. A second instance of the distribution system **1560** can be used to provide wireless voice and data services to mobile device **1522** and to residential and/or commercial establishments **1542** (herein referred to as establishments **1542**). System **1500** can have additional instances of the distribution systems **1550** and **1560** for providing voice and/or data services to mobile devices **1522-1524** and establishments **1542** as shown in FIG. **15**.

Macrocells such as macrocell site **1502** can have dedicated connections to a mobile network and base station device **1504** or can share and/or otherwise use another connection. Central office **1501** can be used to distribute media content and/or provide internet service provider (ISP) services to mobile devices **1522-1524** and establishments **1542**. The central office **1501** can receive media content from a constellation of satellites **1530** (one of which is shown in FIG. **15**) or other sources of content, and distribute such content to mobile devices **1522-1524** and establishments **1542** via the first and second instances of the distribution system **1550** and **1560**. The central office **1501** can also be communicatively coupled to the Internet **1503** for providing internet data services to mobile devices **1522-1524** and establishments **1542**.

Base station device **1504** can be mounted on, or attached to, utility pole **1516**. In other embodiments, base station device **1504** can be near transformers and/or other locations situated nearby a power line. Base station device **1504** can facilitate connectivity to a mobile network for mobile devices **1522** and **1524**. Antennas **1512** and **1514**, mounted on or near utility poles **1518** and **1520**, respectively, can receive signals from base station device **1504** and transmit those signals to mobile devices **1522** and **1524** over a much

wider area than if the antennas **1512** and **1514** were located at or near base station device **1504**.

It is noted that FIG. **15** displays three utility poles, in each instance of the distribution systems **1550** and **1560**, with one base station device, for purposes of simplicity. In other embodiments, utility pole **1516** can have more base station devices, and more utility poles with distributed antennas and/or tethered connections to establishments **1542**.

A transmission device **1506**, such as transmission device **101** or **102** presented in conjunction with FIG. **1**, can transmit a signal from base station device **1504** to antennas **1512** and **1514** via utility or power line(s) that connect the utility poles **1516**, **1518**, and **1520**. To transmit the signal, radio source and/or transmission device **1506** upconverts the signal (e.g., via frequency mixing) from base station device **1504** or otherwise converts the signal from the base station device **1504** to a microwave band signal and the transmission device **1506** launches a microwave band wave that propagates as a guided wave traveling along the utility line or other wire as described in previous embodiments. At utility pole **1518**, another transmission device **1508** receives the guided wave (and optionally can amplify it as needed or desired or operate as a repeater to receive it and regenerate it) and sends it forward as a guided wave on the utility line or other wire. The transmission device **1508** can also extract a signal from the microwave band guided wave and shift it down in frequency or otherwise convert it to its original cellular band frequency (e.g., 1.9 GHz or other defined cellular frequency) or another cellular (or non-cellular) band frequency. An antenna **1512** can wireless transmit the down-shifted signal to mobile device **1522**. The process can be repeated by transmission device **1510**, antenna **1514** and mobile device **1524**, as necessary or desirable.

Transmissions from mobile devices **1522** and **1524** can also be received by antennas **1512** and **1514** respectively. The transmission devices **1508** and **1510** can upshift or otherwise convert the cellular band signals to microwave band and transmit the signals as guided wave (e.g., surface wave or other electromagnetic wave) transmissions over the power line(s) to base station device **1504**.

Media content received by the central office **1501** can be supplied to the second instance of the distribution system **1560** via the base station device **1504** for distribution to mobile devices **1522** and establishments **1542**. The transmission device **1510** can be tethered to the establishments **1542** by one or more wired connections or a wireless interface. The one or more wired connections may include without limitation, a power line, a coaxial cable, a fiber cable, a twisted pair cable, a guided wave transmission medium or other suitable wired mediums for distribution of media content and/or for providing internet services. In an example embodiment, the wired connections from the transmission device **1510** can be communicatively coupled to one or more very high bit rate digital subscriber line (VDSL) modems located at one or more corresponding service area interfaces (SAIs—not shown) or pedestals, each SAI or pedestal providing services to a portion of the establishments **1542**. The VDSL modems can be used to selectively distribute media content and/or provide internet services to gateways (not shown) located in the establishments **1542**. The SAIs or pedestals can also be communicatively coupled to the establishments **1542** over a wired medium such as a power line, a coaxial cable, a fiber cable, a twisted pair cable, a guided wave transmission medium or other suitable wired mediums. In other example embodiments, the transmission device **1510** can be communicatively coupled directly to establishments **1542** without intermediate interfaces such as the SAIs or pedestals.

In another example embodiment, system **1500** can employ diversity paths, where two or more utility lines or other wires are strung between the utility poles **1516**, **1518**, and **1520** (e.g., for example, two or more wires between poles **1516** and **1520**) and redundant transmissions from base station/macrocell site **1502** are transmitted as guided waves down the surface of the utility lines or other wires. The utility lines or other wires can be either insulated or uninsulated, and depending on the environmental conditions that cause transmission losses, the coupling devices can selectively receive signals from the insulated or uninsulated utility lines or other wires. The selection can be based on measurements of the signal-to-noise ratio of the wires, or based on determined weather/environmental conditions (e.g., moisture detectors, weather forecasts, etc.). The use of diversity paths with system **1500** can enable alternate routing capabilities, load balancing, increased load handling, concurrent bi-directional or synchronous communications, spread spectrum communications, etc.

It is noted that the use of the transmission devices **1506**, **1508**, and **1510** in FIG. **15** are by way of example only, and that in other embodiments, other uses are possible. For instance, transmission devices can be used in a backhaul communication system, providing network connectivity to base station devices. Transmission devices **1506**, **1508**, and **1510** can be used in many circumstances where it is desirable to transmit guided wave communications over a wire, whether insulated or not insulated. Transmission devices **1506**, **1508**, and **1510** are improvements over other coupling devices due to no contact or limited physical and/or electrical contact with the wires that may carry high voltages. The transmission device can be located away from the wire (e.g., spaced apart from the wire) and/or located on the wire so long as it is not electrically in contact with the wire, as the dielectric acts as an insulator, allowing for cheap, easy, and/or less complex installation. However, as previously noted conducting or non-dielectric couplers can be employed, for example in configurations where the wires correspond to a telephone network, cable television network, broadband data service, fiber optic communications system or other network employing low voltages or having insulated transmission lines.

It is further noted, that while base station device **1504** and macrocell site **1502** are illustrated in an embodiment, other network configurations are likewise possible. For example, devices such as access points or other wireless gateways can be employed in a similar fashion to extend the reach of other networks such as a wireless local area network, a wireless personal area network or other wireless network that operates in accordance with a communication protocol such as a 802.11 protocol, WIMAX protocol, UltraWideband protocol, Bluetooth protocol, Zigbee protocol or other wireless protocol.

Referring now to FIGS. **16**A & **16**B, block diagrams illustrating an example, non-limiting embodiment of a system for managing a power grid communication system are shown. Considering FIG. **16**A, a waveguide system **1602** is presented for use in a guided wave communications system, such as the system presented in conjunction with FIG. **15**. The waveguide system **1602** can comprise sensors **1604**, a power management system **1605**, a transmission device **101** or **102** that includes at least one communication interface **205**, transceiver **210** and coupler **220**.

The waveguide system **1602** can be coupled to a power line **1610** for facilitating guided wave communications in

accordance with embodiments described in the subject disclosure. In an example embodiment, the transmission device **101** or **102** includes coupler **220** for inducing electromagnetic waves on a surface of the power line **1610** that longitudinally propagate along the surface of the power line **1610** as described in the subject disclosure. The transmission device **101** or **102** can also serve as a repeater for retransmitting electromagnetic waves on the same power line **1610** or for routing electromagnetic waves between power lines **1610** as shown in FIGS. **12-13**.

The transmission device **101** or **102** includes transceiver **210** configured to, for example, up-convert a signal operating at an original frequency range to electromagnetic waves operating at, exhibiting, or associated with a carrier frequency that propagate along a coupler to induce corresponding guided electromagnetic waves that propagate along a surface of the power line **1610**. A carrier frequency can be represented by a center frequency having upper and lower cutoff frequencies that define the bandwidth of the electromagnetic waves. The power line **1610** can be a wire (e.g., single stranded or multi-stranded) having a conducting surface or insulated surface. The transceiver **210** can also receive signals from the coupler **220** and down-convert the electromagnetic waves operating at a carrier frequency to signals at their original frequency.

Signals received by the communications interface **205** of transmission device **101** or **102** for up-conversion can include without limitation signals supplied by a central office **1611** over a wired or wireless interface of the communications interface **205**, a base station **1614** over a wired or wireless interface of the communications interface **205**, wireless signals transmitted by mobile devices **1620** to the base station **1614** for delivery over the wired or wireless interface of the communications interface **205**, signals supplied by in-building communication devices **1618** over the wired or wireless interface of the communications interface **205**, and/or wireless signals supplied to the communications interface **205** by mobile devices **1612** roaming in a wireless communication range of the communications interface **205**. In embodiments where the waveguide system **1602** functions as a repeater, such as shown in FIGS. **12-13**, the communications interface **205** may or may not be included in the waveguide system **1602**.

The electromagnetic waves propagating along the surface of the power line **1610** can be modulated and formatted to include packets or frames of data that include a data payload and further include networking information (such as header information for identifying one or more destination waveguide systems **1602**). The networking information may be provided by the waveguide system **1602** or an originating device such as the central office **1611**, the base station **1614**, mobile devices **1620**, or in-building devices **1618**, or a combination thereof. Additionally, the modulated electromagnetic waves can include error correction data for mitigating signal disturbances. The networking information and error correction data can be used by a destination waveguide system **1602** for detecting transmissions directed to it, and for down-converting and processing with error correction data transmissions that include voice and/or data signals directed to recipient communication devices communicatively coupled to the destination waveguide system **1602**.

Referring now to the sensors **1604** of the waveguide system **1602**, the sensors **1604** can comprise one or more of a temperature sensor **1604***a*, a disturbance detection sensor **1604***b*, a loss of energy sensor **1604***c*, a noise sensor **1604***d*, a vibration sensor **1604***e*, an environmental (e.g., weather) sensor **1604***f*, and/or an image sensor **1604***g*. The temperature sensor **1604***a* can be used to measure ambient temperature, a temperature of the transmission device **101** or **102**, a temperature of the power line **1610**, temperature differentials (e.g., compared to a setpoint or baseline, between transmission device **101** or **102** and **1610**, etc.), or any combination thereof. In one embodiment, temperature metrics can be collected and reported periodically to a network management system **1601** by way of the base station **1614**.

The disturbance detection sensor **1604***b* can perform measurements on the power line **1610** to detect disturbances such as signal reflections, which may indicate a presence of a downstream disturbance that may impede the propagation of electromagnetic waves on the power line **1610**. A signal reflection can represent a distortion resulting from, for example, an electromagnetic wave transmitted on the power line **1610** by the transmission device **101** or **102** that reflects in whole or in part back to the transmission device **101** or **102** from a disturbance in the power line **1610** located downstream from the transmission device **101** or **102**.

Signal reflections can be caused by obstructions on the power line **1610**. For example, a tree limb may cause electromagnetic wave reflections when the tree limb is lying on the power line **1610**, or is in close proximity to the power line **1610** which may cause a corona discharge. Other obstructions that can cause electromagnetic wave reflections can include without limitation an object that has been entangled on the power line **1610** (e.g., clothing, a shoe wrapped around a power line **1610** with a shoe string, etc.), a corroded build-up on the power line **1610** or an ice build-up. Power grid components may also impede or obstruct with the propagation of electromagnetic waves on the surface of power lines **1610**. Illustrations of power grid components that may cause signal reflections include without limitation a transformer and a joint for connecting spliced power lines. A sharp angle on the power line **1610** may also cause electromagnetic wave reflections.

The disturbance detection sensor **1604***b* can comprise a circuit to compare magnitudes of electromagnetic wave reflections to magnitudes of original electromagnetic waves transmitted by the transmission device **101** or **102** to determine how much a downstream disturbance in the power line **1610** attenuates transmissions. The disturbance detection sensor **1604***b* can further comprise a spectral analyzer circuit for performing spectral analysis on the reflected waves. The spectral data generated by the spectral analyzer circuit can be compared with spectral profiles via pattern recognition, an expert system, curve fitting, matched filtering or other artificial intelligence, classification or comparison technique to identify a type of disturbance based on, for example, the spectral profile that most closely matches the spectral data. The spectral profiles can be stored in a memory of the disturbance detection sensor **1604***b* or may be remotely accessible by the disturbance detection sensor **1604***b*. The profiles can comprise spectral data that models different disturbances that may be encountered on power lines **1610** to enable the disturbance detection sensor **1604***b* to identify disturbances locally. An identification of the disturbance if known can be reported to the network management system **1601** by way of the base station **1614**. The disturbance detection sensor **1604***b* can also utilize the transmission device **101** or **102** to transmit electromagnetic waves as test signals to determine a roundtrip time for an electromagnetic wave reflection. The round trip time measured by the disturbance detection sensor **1604***b* can be used to calculate a distance traveled by the electromagnetic wave up to a point where the reflection takes place, which enables the disturbance detection sensor **1604***b* to calculate a distance from

the transmission device **101** or **102** to the downstream disturbance on the power line **1610**.

The distance calculated can be reported to the network management system **1601** by way of the base station **1614**. In one embodiment, the location of the waveguide system **1602** on the power line **1610** may be known to the network management system **1601**, which the network management system **1601** can use to determine a location of the disturbance on the power line **1610** based on a known topology of the power grid. In another embodiment, the waveguide system **1602** can provide its location to the network management system **1601** to assist in the determination of the location of the disturbance on the power line **1610**. The location of the waveguide system **1602** can be obtained by the waveguide system **1602** from a pre-programmed location of the waveguide system **1602** stored in a memory of the waveguide system **1602**, or the waveguide system **1602** can determine its location using a GPS receiver (not shown) included in the waveguide system **1602**.

The power management system **1605** provides energy to the aforementioned components of the waveguide system **1602**. The power management system **1605** can receive energy from solar cells, or from a transformer (not shown) coupled to the power line **1610**, or by inductive coupling to the power line **1610** or another nearby power line. The power management system **1605** can also include a backup battery and/or a super capacitor or other capacitor circuit for providing the waveguide system **1602** with temporary power. The loss of energy sensor **1604***c* can be used to detect when the waveguide system **1602** has a loss of power condition and/or the occurrence of some other malfunction. For example, the loss of energy sensor **1604***c* can detect when there is a loss of power due to defective solar cells, an obstruction on the solar cells that causes them to malfunction, loss of power on the power line **1610**, and/or when the backup power system malfunctions due to expiration of a backup battery, or a detectable defect in a super capacitor. When a malfunction and/or loss of power occurs, the loss of energy sensor **1604***c* can notify the network management system **1601** by way of the base station **1614**.

The noise sensor **1604***d* can be used to measure noise on the power line **1610** that may adversely affect transmission of electromagnetic waves on the power line **1610**. The noise sensor **1604***d* can sense unexpected electromagnetic interference, noise bursts, or other sources of disturbances that may interrupt reception of modulated electromagnetic waves on a surface of a power line **1610**. A noise burst can be caused by, for example, a corona discharge, or other source of noise. The noise sensor **1604***d* can compare the measured noise to a noise profile obtained by the waveguide system **1602** from an internal database of noise profiles or from a remotely located database that stores noise profiles via pattern recognition, an expert system, curve fitting, matched filtering or other artificial intelligence, classification or comparison technique. From the comparison, the noise sensor **1604***d* may identify a noise source (e.g., corona discharge or otherwise) based on, for example, the noise profile that provides the closest match to the measured noise. The noise sensor **1604***d* can also detect how noise affects transmissions by measuring transmission metrics such as bit error rate, packet loss rate, jitter, packet retransmission requests, etc. The noise sensor **1604***d* can report to the network management system **1601** by way of the base station **1614** the identity of noise sources, their time of occurrence, and transmission metrics, among other things.

The vibration sensor **1604***e* can include accelerometers and/or gyroscopes to detect 2D or 3D vibrations on the power line **1610**. The vibrations can be compared to vibration profiles that can be stored locally in the waveguide system **1602**, or obtained by the waveguide system **1602** from a remote database via pattern recognition, an expert system, curve fitting, matched filtering or other artificial intelligence, classification or comparison technique. Vibration profiles can be used, for example, to distinguish fallen trees from wind gusts based on, for example, the vibration profile that provides the closest match to the measured vibrations. The results of this analysis can be reported by the vibration sensor **1604***e* to the network management system **1601** by way of the base station **1614**.

The environmental sensor **1604***f* can include a barometer for measuring atmospheric pressure, ambient temperature (which can be provided by the temperature sensor **1604***a*), wind speed, humidity, wind direction, and rainfall, among other things. The environmental sensor **1604***f* can collect raw information and process this information by comparing it to environmental profiles that can be obtained from a memory of the waveguide system **1602** or a remote database to predict weather conditions before they arise via pattern recognition, an expert system, knowledge-based system or other artificial intelligence, classification or other weather modeling and prediction technique. The environmental sensor **1604***f* can report raw data as well as its analysis to the network management system **1601**.

The image sensor **1604***g* can be a digital camera (e.g., a charged coupled device or CCD imager, infrared camera, etc.) for capturing images in a vicinity of the waveguide system **1602**. The image sensor **1604***g* can include an electromechanical mechanism to control movement (e.g., actual position or focal points/zooms) of the camera for inspecting the power line **1610** from multiple perspectives (e.g., top surface, bottom surface, left surface, right surface and so on). Alternatively, the image sensor **1604***g* can be designed such that no electromechanical mechanism is needed in order to obtain the multiple perspectives. The collection and retrieval of imaging data generated by the image sensor **1604***g* can be controlled by the network management system **1601**, or can be autonomously collected and reported by the image sensor **1604***g* to the network management system **1601**.

Other sensors that may be suitable for collecting telemetry information associated with the waveguide system **1602** and/or the power lines **1610** for purposes of detecting, predicting and/or mitigating disturbances that can impede the propagation of electromagnetic wave transmissions on power lines **1610** (or any other form of a transmission medium of electromagnetic waves) may be utilized by the waveguide system **1602**.

Referring now to FIG. **16**B, block diagram **1650** illustrates an example, non-limiting embodiment of a system for managing a power grid **1653** and a communication system **1655** embedded therein or associated therewith in accordance with various aspects described herein. The communication system **1655** comprises a plurality of waveguide systems **1602** coupled to power lines **1610** of the power grid **1653**. At least a portion of the waveguide systems **1602** used in the communication system **1655** can be in direct communication with a base station **1614** and/or the network management system **1601**. Waveguide systems **1602** not directly connected to a base station **1614** or the network management system **1601** can engage in communication sessions with either a base station **1614** or the network management system **1601** by way of other downstream waveguide systems **1602** connected to a base station **1614** or the network management system **1601**.

The network management system **1601** can be communicatively coupled to equipment of a utility company **1652** and equipment of a communications service provider **1654** for providing each entity, status information associated with the power grid **1653** and the communication system **1655**, respectively. The network management system **1601**, the equipment of the utility company **1652**, and the communications service provider **1654** can access communication devices utilized by utility company personnel **1656** and/or communication devices utilized by communications service provider personnel **1658** for purposes of providing status information and/or for directing such personnel in the management of the power grid **1653** and/or communication system **1655**.

FIG. **17**A illustrates a flow diagram of an example, non-limiting embodiment of a method **1700** for detecting and mitigating disturbances occurring in a communication network of the systems of FIGS. **16**A & **16**B. Method **1700** can begin with step **1702** where a waveguide system **1602** transmits and receives messages embedded in, or forming part of, modulated electromagnetic waves or another type of electromagnetic waves traveling along a surface of a power line **1610**. The messages can be voice messages, streaming video, and/or other data/information exchanged between communication devices communicatively coupled to the communication system **1655**. At step **1704** the sensors **1604** of the waveguide system **1602** can collect sensing data. In an embodiment, the sensing data can be collected in step **1704** prior to, during, or after the transmission and/or receipt of messages in step **1702**. At step **1706** the waveguide system **1602** (or the sensors **1604** themselves) can determine from the sensing data an actual or predicted occurrence of a disturbance in the communication system **1655** that can affect communications originating from (e.g., transmitted by) or received by the waveguide system **1602**. The waveguide system **1602** (or the sensors **1604**) can process temperature data, signal reflection data, loss of energy data, noise data, vibration data, environmental data, or any combination thereof to make this determination. The waveguide system **1602** (or the sensors **1604**) may also detect, identify, estimate, or predict the source of the disturbance and/or its location in the communication system **1655**. If a disturbance is neither detected/identified nor predicted/estimated at step **1708**, the waveguide system **1602** can proceed to step **1702** where it continues to transmit and receive messages embedded in, or forming part of, modulated electromagnetic waves traveling along a surface of the power line **1610**.

If at step **1708** a disturbance is detected/identified or predicted/estimated to occur, the waveguide system **1602** proceeds to step **1710** to determine if the disturbance adversely affects (or alternatively, is likely to adversely affect or the extent to which it may adversely affect) transmission or reception of messages in the communication system **1655**. In one embodiment, a duration threshold and a frequency of occurrence threshold can be used at step **1710** to determine when a disturbance adversely affects communications in the communication system **1655**. For illustration purposes only, assume a duration threshold is set to 500 ms, while a frequency of occurrence threshold is set to 5 disturbances occurring in an observation period of 10 sec. Thus, a disturbance having a duration greater than 500 ms will trigger the duration threshold. Additionally, any disturbance occurring more than 5 times in a 10 sec time interval will trigger the frequency of occurrence threshold.

In one embodiment, a disturbance may be considered to adversely affect signal integrity in the communication systems **1655** when the duration threshold alone is exceeded. In another embodiment, a disturbance may be considered as adversely affecting signal integrity in the communication systems **1655** when both the duration threshold and the frequency of occurrence threshold are exceeded. The latter embodiment is thus more conservative than the former embodiment for classifying disturbances that adversely affect signal integrity in the communication system **1655**. It will be appreciated that many other algorithms and associated parameters and thresholds can be utilized for step **1710** in accordance with example embodiments.

Referring back to method **1700**, if at step **1710** the disturbance detected at step **1708** does not meet the condition for adversely affected communications (e.g., neither exceeds the duration threshold nor the frequency of occurrence threshold), the waveguide system **1602** may proceed to step **1702** and continue processing messages. For instance, if the disturbance detected in step **1708** has a duration of 1 msec with a single occurrence in a 10 sec time period, then neither threshold will be exceeded. Consequently, such a disturbance may be considered as having a nominal effect on signal integrity in the communication system **1655** and thus would not be flagged as a disturbance requiring mitigation. Although not flagged, the occurrence of the disturbance, its time of occurrence, its frequency of occurrence, spectral data, and/or other useful information, may be reported to the network management system **1601** as telemetry data for monitoring purposes.

Referring back to step **1710**, if on the other hand the disturbance satisfies the condition for adversely affected communications (e.g., exceeds either or both thresholds), the waveguide system **1602** can proceed to step **1712** and report the incident to the network management system **1601**. The report can include raw sensing data collected by the sensors **1604**, a description of the disturbance if known by the waveguide system **1602**, a time of occurrence of the disturbance, a frequency of occurrence of the disturbance, a location associated with the disturbance, parameters readings such as bit error rate, packet loss rate, retransmission requests, jitter, latency and so on. If the disturbance is based on a prediction by one or more sensors of the waveguide system **1602**, the report can include a type of disturbance expected, and if predictable, an expected time occurrence of the disturbance, and an expected frequency of occurrence of the predicted disturbance when the prediction is based on historical sensing data collected by the sensors **1604** of the waveguide system **1602**.

At step **1714**, the network management system **1601** can determine a mitigation, circumvention, or correction technique, which may include directing the waveguide system **1602** to reroute traffic to circumvent the disturbance if the location of the disturbance can be determined. In one embodiment, the waveguide coupling device **1402** detecting the disturbance may direct a repeater such as the one shown in FIGS. **13-14** to connect the waveguide system **1602** from a primary power line affected by the disturbance to a secondary power line to enable the waveguide system **1602** to reroute traffic to a different transmission medium and avoid the disturbance. In an embodiment where the waveguide system **1602** is configured as a repeater the waveguide system **1602** can itself perform the rerouting of traffic from the primary power line to the secondary power line. It is further noted that for bidirectional communications (e.g., full or half-duplex communications), the repeater can be configured to reroute traffic from the secondary power line back to the primary power line for processing by the waveguide system **1602**.

In another embodiment, the waveguide system **1602** can redirect traffic by instructing a first repeater situated upstream of the disturbance and a second repeater situated downstream of the disturbance to redirect traffic from a primary power line temporarily to a secondary power line and back to the primary power line in a manner that avoids the disturbance. It is further noted that for bidirectional communications (e.g., full or half-duplex communications), repeaters can be configured to reroute traffic from the secondary power line back to the primary power line.

To avoid interrupting existing communication sessions occurring on a secondary power line, the network management system **1601** may direct the waveguide system **1602** to instruct repeater(s) to utilize unused time slot(s) and/or frequency band(s) of the secondary power line for redirecting data and/or voice traffic away from the primary power line to circumvent the disturbance.

At step **1716**, while traffic is being rerouted to avoid the disturbance, the network management system **1601** can notify equipment of the utility company **1652** and/or equipment of the communications service provider **1654**, which in turn may notify personnel of the utility company **1656** and/or personnel of the communications service provider **1658** of the detected disturbance and its location if known. Field personnel from either party can attend to resolving the disturbance at a determined location of the disturbance. Once the disturbance is removed or otherwise mitigated by personnel of the utility company and/or personnel of the communications service provider, such personnel can notify their respective companies and/or the network management system **1601** utilizing field equipment (e.g., a laptop computer, smartphone, etc.) communicatively coupled to network management system **1601**, and/or equipment of the utility company and/or the communications service provider. The notification can include a description of how the disturbance was mitigated and any changes to the power lines **1610** that may change a topology of the communication system **1655**.

Once the disturbance has been resolved (as determined in decision **1718**), the network management system **1601** can direct the waveguide system **1602** at step **1720** to restore the previous routing configuration used by the waveguide system **1602** or route traffic according to a new routing configuration if the restoration strategy used to mitigate the disturbance resulted in a new network topology of the communication system **1655**. In another embodiment, the waveguide system **1602** can be configured to monitor mitigation of the disturbance by transmitting test signals on the power line **1610** to determine when the disturbance has been removed. Once the waveguide system **1602** detects an absence of the disturbance it can autonomously restore its routing configuration without assistance by the network management system **1601** if it determines the network topology of the communication system **1655** has not changed, or it can utilize a new routing configuration that adapts to a detected new network topology.

FIG. **17**B illustrates a flow diagram of an example, non-limiting embodiment of a method **1750** for detecting and mitigating disturbances occurring in a communication network of the system of FIGS. **16**A and **16**B. In one embodiment, method **1750** can begin with step **1752** where a network management system **1601** receives from equipment of the utility company **1652** or equipment of the communications service provider **1654** maintenance information associated with a maintenance schedule. The network management system **1601** can at step **1754** identify from the maintenance information, maintenance activities to be performed during the maintenance schedule. From these activities, the network management system **1601** can detect a disturbance resulting from the maintenance (e.g., scheduled replacement of a power line **1610**, scheduled replacement of a waveguide system **1602** on the power line **1610**, scheduled reconfiguration of power lines **1610** in the power grid **1653**, etc.).

In another embodiment, the network management system **1601** can receive at step **1755** telemetry information from one or more waveguide systems **1602**. The telemetry information can include among other things an identity of each waveguide system **1602** submitting the telemetry information, measurements taken by sensors **1604** of each waveguide system **1602**, information relating to predicted, estimated, or actual disturbances detected by the sensors **1604** of each waveguide system **1602**, location information associated with each waveguide system **1602**, an estimated location of a detected disturbance, an identification of the disturbance, and so on. The network management system **1601** can determine from the telemetry information a type of disturbance that may be adverse to operations of the waveguide, transmission of the electromagnetic waves along the wire surface, or both. The network management system **1601** can also use telemetry information from multiple waveguide systems **1602** to isolate and identify the disturbance. Additionally, the network management system **1601** can request telemetry information from waveguide systems **1602** in a vicinity of an affected waveguide system **1602** to triangulate a location of the disturbance and/or validate an identification of the disturbance by receiving similar telemetry information from other waveguide systems **1602**.

In yet another embodiment, the network management system **1601** can receive at step **1756** an unscheduled activity report from maintenance field personnel. Unscheduled maintenance may occur as result of field calls that are unplanned or as a result of unexpected field issues discovered during field calls or scheduled maintenance activities. The activity report can identify changes to a topology configuration of the power grid **1653** resulting from field personnel addressing discovered issues in the communication system **1655** and/or power grid **1653**, changes to one or more waveguide systems **1602** (such as replacement or repair thereof), mitigation of disturbances performed if any, and so on.

At step **1758**, the network management system **1601** can determine from reports received according to steps **1752** through **1756** if a disturbance will occur based on a maintenance schedule, or if a disturbance has occurred or is predicted to occur based on telemetry data, or if a disturbance has occurred due to an unplanned maintenance identified in a field activity report. From any of these reports, the network management system **1601** can determine whether a detected or predicted disturbance requires rerouting of traffic by the affected waveguide systems **1602** or other waveguide systems **1602** of the communication system **1655**.

When a disturbance is detected or predicted at step **1758**, the network management system **1601** can proceed to step **1760** where it can direct one or more waveguide systems **1602** to reroute traffic to circumvent the disturbance. When the disturbance is permanent due to a permanent topology change of the power grid **1653**, the network management system **1601** can proceed to step **1770** and skip steps **1762**, **1764**, **1766**, and **1772**. At step **1770**, the network management system **1601** can direct one or more waveguide systems **1602** to use a new routing configuration that adapts to the new topology. However, when the disturbance has been detected from telemetry information supplied by one or

more waveguide systems **1602**, the network management system **1601** can notify maintenance personnel of the utility company **1656** or the communications service provider **1658** of a location of the disturbance, a type of disturbance if known, and related information that may be helpful to such personnel to mitigate the disturbance. When a disturbance is expected due to maintenance activities, the network management system **1601** can direct one or more waveguide systems **1602** to reconfigure traffic routes at a given schedule (consistent with the maintenance schedule) to avoid disturbances caused by the maintenance activities during the maintenance schedule.

Returning back to step **1760** and upon its completion, the process can continue with step **1762**. At step **1762**, the network management system **1601** can monitor when the disturbance(s) have been mitigated by field personnel. Mitigation of a disturbance can be detected at step **1762** by analyzing field reports submitted to the network management system **1601** by field personnel over a communications network (e.g., cellular communication system) utilizing field equipment (e.g., a laptop computer or handheld computer/device). If field personnel have reported that a disturbance has been mitigated, the network management system **1601** can proceed to step **1764** to determine from the field report whether a topology change was required to mitigate the disturbance. A topology change can include rerouting a power line **1610**, reconfiguring a waveguide system **1602** to utilize a different power line **1610**, otherwise utilizing an alternative link to bypass the disturbance and so on. If a topology change has taken place, the network management system **1601** can direct at step **1770** one or more waveguide systems **1602** to use a new routing configuration that adapts to the new topology.

If, however, a topology change has not been reported by field personnel, the network management system **1601** can proceed to step **1766** where it can direct one or more waveguide systems **1602** to send test signals to test a routing configuration that had been used prior to the detected disturbance(s). Test signals can be sent to affected waveguide systems **1602** in a vicinity of the disturbance. The test signals can be used to determine if signal disturbances (e.g., electromagnetic wave reflections) are detected by any of the waveguide systems **1602**. If the test signals confirm that a prior routing configuration is no longer subject to previously detected disturbance(s), then the network management system **1601** can at step **1772** direct the affected waveguide systems **1602** to restore a previous routing configuration. If, however, test signals analyzed by one or more waveguide coupling device **1402** and reported to the network management system **1601** indicate that the disturbance(s) or new disturbance(s) are present, then the network management system **1601** will proceed to step **1768** and report this information to field personnel to further address field issues. The network management system **1601** can in this situation continue to monitor mitigation of the disturbance(s) at step **1762**.

In the aforementioned embodiments, the waveguide systems **1602** can be configured to be self-adapting to changes in the power grid **1653** and/or to mitigation of disturbances. That is, one or more affected waveguide systems **1602** can be configured to self-monitor mitigation of disturbances and reconfigure traffic routes without requiring instructions to be sent to them by the network management system **1601**. In this embodiment, the one or more waveguide systems **1602** that are self-configurable can inform the network management system **1601** of its routing choices so that the network management system **1601** can maintain a macro-level view of the communication topology of the communication system **1655**.

While for purposes of simplicity of explanation, the respective processes are shown and described as a series of blocks in FIGS. **17**A and **17**B, respectively, it is to be understood and appreciated that the claimed subject matter is not limited by the order of the blocks, as some blocks may occur in different orders and/or concurrently with other blocks from what is depicted and described herein. Moreover, not all illustrated blocks may be required to implement the methods described herein.

Turning now to FIG. **18**A, a block diagram illustrating an example, non-limiting embodiment of a transmission medium **1800** for propagating guided electromagnetic waves is shown. In particular, a further example of transmission medium **125** presented in conjunction with FIG. **1** is presented. In an embodiment, the transmission medium **1800** can comprise a first dielectric material **1802** and a second dielectric material **1804** disposed thereon. In an embodiment, the first dielectric material **1802** can comprise a dielectric core (referred to herein as dielectric core **1802**) and the second dielectric material **1804** can comprise a cladding or shell such as a dielectric foam that surrounds in whole or in part the dielectric core (referred to herein as dielectric foam **1804**). In an embodiment, the dielectric core **1802** and dielectric foam **1804** can be coaxially aligned to each other (although not necessary). In an embodiment, the combination of the dielectric core **1802** and the dielectric foam **1804** can be flexed or bent at least by 45 degrees without damaging the materials of the dielectric core **1802** and the dielectric foam **1804**. In an embodiment, an outer surface of the dielectric foam **1804** can be further surrounded in whole or in part by a third dielectric material **1806**, which can serve as an outer jacket (referred to herein as jacket **1806**). The jacket **1806** can prevent exposure of the dielectric core **1802** and the dielectric foam **1804** to an environment that can adversely affect the propagation of electromagnetic waves (e.g., water, soil, etc.).

The dielectric core **1802** can comprise, for example, a high density polyethylene material, a high density polyurethane material, or other suitable dielectric material(s). The dielectric foam **1804** can comprise, for example, a cellular plastic material such an expanded polyethylene material, or other suitable dielectric material(s). The jacket **1806** can comprise, for example, a polyethylene material or equivalent. In an embodiment, the dielectric constant of the dielectric foam **1804** can be (or substantially) lower than the dielectric constant of the dielectric core **1802**. For example, the dielectric constant of the dielectric core **1802** can be approximately 2.3 while the dielectric constant of the dielectric foam **1804** can be approximately 1.15 (slightly higher than the dielectric constant of air).

The dielectric core **1802** can be used for receiving signals in the form of electromagnetic waves from a launcher or other coupling device described herein which can be configured to launch guided electromagnetic waves on the transmission medium **1800**. In one embodiment, the transmission **1800** can be coupled to a hollow waveguide **1808** structured as, for example, a circular waveguide **1809**, which can receive electromagnetic waves from a radiating device such as a stub antenna (not shown). The hollow waveguide **1808** can in turn induce guided electromagnetic waves in the dielectric core **1802**. In this configuration, the guided electromagnetic waves are guided by or bound to the dielectric core **1802** and propagate longitudinally along the dielectric core **1802**. By adjusting electronics of the launcher, an

operating frequency of the electromagnetic waves can be chosen such that a field intensity profile **1810** of the guided electromagnetic waves extends nominally (or not at all) outside of the jacket **1806**.

By maintaining most (if not all) of the field strength of the guided electromagnetic waves within portions of the dielectric core **1802**, the dielectric foam **1804** and/or the jacket **1806**, the transmission medium **1800** can be used in hostile environments without adversely affecting the propagation of the electromagnetic waves propagating therein. For example, the transmission medium **1800** can be buried in soil with no (or nearly no) adverse effect to the guided electromagnetic waves propagating in the transmission medium **1800**. Similarly, the transmission medium **1800** can be exposed to water (e.g., rain or placed underwater) with no (or nearly no) adverse effect to the guided electromagnetic waves propagating in the transmission medium **1800**. In an embodiment, the propagation loss of guided electromagnetic waves in the foregoing embodiments can be 1 to 2 dB per meter or better at an operating frequency of 60 GHz. Depending on the operating frequency of the guided electromagnetic waves and/or the materials used for the transmission medium **1800** other propagation losses may be possible. Additionally, depending on the materials used to construct the transmission medium **1800**, the transmission medium **1800** can in some embodiments be flexed laterally with no (or nearly no) adverse effect to the guided electromagnetic waves propagating through the dielectric core **1802** and the dielectric foam **1804**.

FIG. **18**B depicts a transmission medium **1820** that differs from the transmission medium **1800** of FIG. **18**A, yet provides a further example of the transmission medium **125** presented in conjunction with FIG. **1**. The transmission medium **1820** shows similar reference numerals for similar elements of the transmission medium **1800** of FIG. **18**A. In contrast to the transmission medium **1800**, the transmission medium **1820** comprises a conductive core **1822** having an insulation layer **1823** surrounding the conductive core **1822** in whole or in part. The combination of the insulation layer **1823** and the conductive core **1822** will be referred to herein as an insulated conductor **1825**. In the illustration of FIG. **18**B, the insulation layer **1823** is covered in whole or in part by a dielectric foam **1804** and jacket **1806**, which can be constructed from the materials previously described. In an embodiment, the insulation layer **1823** can comprise a dielectric material, such as polyethylene, having a higher dielectric constant than the dielectric foam **1804** (e.g., 2.3 and 1.15, respectively). In an embodiment, the components of the transmission medium **1820** can be coaxially aligned (although not necessary). In an embodiment, a hollow waveguide **1808** having metal plates **1809**, which can be separated from the insulation layer **1823** (although not necessary) can be used to launch guided electromagnetic waves that substantially propagate on an outer surface of the insulation layer **1823**, however other coupling devices as described herein can likewise be employed. In an embodiment, the guided electromagnetic waves can be sufficiently guided by or bound by the insulation layer **1823** to guide the electromagnetic waves longitudinally along the insulation layer **1823**. By adjusting operational parameters of the launcher, an operating frequency of the guided electromagnetic waves launched by the hollow waveguide **1808** can generate an electric field intensity profile **1824** that results in the guided electromagnetic waves being substantially confined within the dielectric foam **1804** thereby preventing the guided electromagnetic waves from being exposed to an environment (e.g., water, soil, etc.) that adversely affects propagation of the guided electromagnetic waves via the transmission medium **1820**.

FIG. **18**C depicts a transmission medium **1830** that differs from the transmission mediums **1800** and **1820** of FIGS. **18**A and **18**B, yet provides a further example of the transmission medium **125** presented in conjunction with FIG. **1**. The transmission medium **1830** shows similar reference numerals for similar elements of the transmission mediums **1800** and **1820** of FIGS. **18**A and **18**B, respectively. In contrast to the transmission mediums **1800** and **1820**, the transmission medium **1830** comprises a bare (or uninsulated) conductor **1832** surrounded in whole or in part by the dielectric foam **1804** and the jacket **1806**, which can be constructed from the materials previously described. In an embodiment, the components of the transmission medium **1830** can be coaxially aligned (although not necessary). In an embodiment, a hollow waveguide **1808** having metal plates **1809** coupled to the bare conductor **1832** can be used to launch guided electromagnetic waves that substantially propagate on an outer surface of the bare conductor **1832**, however other coupling devices described herein can likewise be employed. In an embodiment, the guided electromagnetic waves can be sufficiently guided by or bound by the bare conductor **1832** to guide the guided electromagnetic waves longitudinally along the bare conductor **1832**. By adjusting operational parameters of the launcher, an operating frequency of the guided electromagnetic waves launched by the hollow waveguide **1808** can generate an electric field intensity profile **1834** that results in the guided electromagnetic waves being substantially confined within the dielectric foam **1804** thereby preventing the guided electromagnetic waves from being exposed to an environment (e.g., water, soil, etc.) that adversely affects propagation of the electromagnetic waves via the transmission medium **1830**.

It should be noted that the hollow launcher **1808** used with the transmission mediums **1800**, **1820** and **1830** of FIGS. **18**A, **18**B and **18**C, respectively, can be replaced with other launchers or coupling devices. Additionally, the propagation mode(s) of the electromagnetic waves for any of the foregoing embodiments can be fundamental mode(s), a non-fundamental (or asymmetric) mode(s), or combinations thereof.

FIG. **18**D is a block diagram illustrating an example, non-limiting embodiment of bundled transmission media **1836** in accordance with various aspects described herein. The bundled transmission media **1836** can comprise a plurality of cables **1838** held in place by a flexible sleeve **1839**. The plurality of cables **1838** can comprise multiple instances of cable **1800** of FIG. **18**A, multiple instances of cable **1820** of FIG. **18**B, multiple instances of cable **1830** of FIG. **18**C, or any combinations thereof. The sleeve **1839** can comprise a dielectric material that prevents soil, water or other external materials from making contact with the plurality of cables **1838**. In an embodiment, a plurality of launchers, each utilizing a transceiver similar to the one depicted in FIG. **10**A or other coupling devices described herein, can be adapted to selectively induce a guided electromagnetic wave in each cable, each guided electromagnetic wave conveys different data (e.g., voice, video, messaging, content, etc.). In an embodiment, by adjusting operational parameters of each launcher or other coupling device, the electric field intensity profile of each guided electromagnetic wave can be fully or substantially confined within layers of a corresponding cable **1838** to reduce cross-talk between cables **1838**.

In situations where the electric field intensity profile of each guided electromagnetic wave is not fully or substan-

tially confined within a corresponding cable **1838**, cross-talk of electromagnetic signals can occur between cables **1838** as illustrated by signal plots associated with two cables depicted in FIG. **18**E. The plots in FIG. **18**E show that when a guided electromagnetic wave is induced on a first cable, the emitted electric and magnetic fields of the first cable can induce signals on the second cable, which results in cross-talk. Several mitigation options can be used to reduce cross-talk between the cables **1838** of FIG. **18**D. In an embodiment, an absorption material **1840** that can absorb electromagnetic fields, such as carbon, can be applied to the cables **1838** as shown in FIG. **18**F to polarize each guided electromagnetic wave at various polarization states to reduce cross-talk between cables **1838**. In another embodiment (not shown), carbon beads can be added to gaps between the cables **1838** to reduce cross-talk.

In yet another embodiment (not shown), a diameter of cable **1838** can be configured differently to vary a speed of propagation of guided electromagnetic waves between the cables **1838** in order to reduce cross-talk between cables **1838**. In an embodiment (not shown), a shape of each cable **1838** can be made asymmetric (e.g., elliptical) to direct the guided electromagnetic fields of each cable **1838** away from each other to reduce cross-talk. In an embodiment (not shown), a filler material such as dielectric foam can be added between cables **1838** to sufficiently separate the cables **1838** to reduce cross-talk therebetween. In an embodiment (not shown), longitudinal carbon strips or swirls can be applied to on an outer surface of the jacket **1806** of each cable **1838** to reduce radiation of guided electromagnetic waves outside of the jacket **1806** and thereby reduce cross-talk between cables **1838**. In yet another embodiment, each launcher can be configured to launch a guided electromagnetic wave having a different frequency, modulation, wave propagation mode, such as an orthogonal frequency, modulation or mode, to reduce cross-talk between the cables **1838**.

In yet another embodiment (not shown), pairs of cables **1838** can be twisted in a helix to reduce cross-talk between the pairs and other cables **1838** in a vicinity of the pairs. In some embodiments, certain cables **1838** can be twisted while other cables **1838** are not twisted to reduce cross-talk between the cables **1838**. Additionally, each twisted pair cable **1838** can have different pitches (i.e., different twist rates, such as twists per meter) to further reduce cross-talk between the pairs and other cables **1838** in a vicinity of the pairs. In another embodiment (not shown), launchers or other coupling devices can be configured to induce guided electromagnetic waves in the cables **1838** having electromagnetic fields that extend beyond the jacket **1806** into gaps between the cables to reduce cross-talk between the cables **1838**. It is submitted that any one of the foregoing embodiments for mitigating cross-talk between cables **1838** can be combined to further reduce cross-talk therebetween.

FIGS. **18**G and **18**H are block diagrams illustrating example, non-limiting embodiments of a transmission medium with an inner waveguide in accordance with various aspects described herein. In an embodiment, a transmission medium **1841** can comprise a core **1842**. In one embodiment, the core **1842** can be a dielectric core **1842** (e.g., polyethylene). In another embodiment, the core **1842** can be an insulated or uninsulated conductor. The core **1842** can be surrounded by a shell **1844** comprising a dielectric foam (e.g., expanded polyethylene material) having a lower dielectric constant than the dielectric constant of a dielectric core, or insulation layer of a conductive core. The difference in dielectric constants enables electromagnetic waves to be bound and guided by the core **1842**. The shell **1844** can be covered by a shell jacket **1845**. The shell jacket **1845** can be made of rigid material (e.g., high density plastic) or a high tensile strength material (e.g., synthetic fiber). In an embodiment, the shell jacket **1845** can be used to prevent exposure of the shell **1844** and core **1842** from an adverse environment (e.g., water, moisture, soil, etc.). In an embodiment, the shell jacket **1845** can be sufficiently rigid to separate an outer surface of the core **1842** from an inner surface of the shell jacket **1845** thereby resulting in a longitudinal gap between the shell jacket **1854** and the core **1842**. The longitudinal gap can be filled with the dielectric foam of the shell **1844**.

The transmission medium **1841** can further include a plurality of outer ring conductors **1846**. The outer ring conductors **1846** can be strands of conductive material that are woven around the shell jacket **1845**, thereby covering the shell jacket **1845** in whole or in part. The outer ring conductors **1846** can serve the function of a power line having a return electrical path similar to the embodiments described in the subject disclosure for receiving power signals from a source (e.g., a transformer, a power generator, etc.). In one embodiment, the outer ring conductors **1846** can be covered by a cable jacket **1847** to prevent exposure of the outer ring conductors **1846** to water, soil, or other environmental factors. The cable jacket **1847** can be made of an insulating material such as polyethylene. The core **1842** can be used as a center waveguide for the propagation of electromagnetic waves. A hallow waveguide launcher **1808**, such as the circular waveguide previously described, can be used to launch signals that induce electromagnetic waves guided by the core **1842** in ways similar to those described for the embodiments of FIGS. **18**A, **18**B, and **18**C. The electromagnetic waves can be guided by the core **1842** without utilizing the electrical return path of the outer ring conductors **1846** or any other electrical return path. By adjusting electronics of the launcher **1808**, an operating frequency of the electromagnetic waves can be chosen such that a field intensity profile of the guided electromagnetic waves extends nominally (or not at all) outside of the shell jacket **1845**.

In another embodiment, a transmission medium **1843** can comprise a hollow core **1842'** surrounded by a shell jacket **1845'**. The shell jacket **1845'** can have an inner conductive surface or other surface materials that enable the hollow core **1842'** to be used as a conduit for electromagnetic waves. The shell jacket **1845'** can be covered at least in part with the outer ring conductors **1846** described earlier for conducting a power signal. In an embodiment, a cable jacket **1847** can be disposed on an outer surface of the outer ring conductors **1846** to prevent exposure of the outer ring conductors **1846** to water, soil or other environmental factors. A waveguide launcher **1808** can be used to launch electromagnetic waves guided by the hollow core **1842'** and the conductive inner surface of the shell jacket **1845'**. In an embodiment (not shown) the hollow core **1842'** can further include a dielectric foam such as described earlier.

Transmission medium **1841** can represent a multi-purpose cable that conducts power on the outer ring conductors **1846** utilizing an electrical return path and that provides communication services by way of an inner waveguide comprising a combination of the core **1842**, the shell **1844** and the shell jacket **1845**. The inner waveguide can be used for transmitting or receiving electromagnetic waves (without utilizing an electrical return path) guided by the core **1842**. Similarly, transmission medium **1843** can represent a multi-purpose cable that conducts power on the outer ring conductors **1846** utilizing an electrical return path and that provides communication services by way of an inner waveguide comprising

a combination of the hollow core **1842'** and the shell jacket **1845'**. The inner waveguide can be used for transmitting or receiving electromagnetic waves (without utilizing an electrical return path) guided the hollow core **1842'** and the shell jacket **1845'**.

It is submitted that embodiments of FIGS. **18**G-**18**H can be adapted to use multiple inner waveguides surrounded by outer ring conductors **1846**. The inner waveguides can be adapted to use to cross-talk mitigation techniques described above (e.g., twisted pairs of waveguides, waveguides of different structural dimensions, use of polarizers within the shell, use of different wave modes, etc.).

For illustration purposes only, the transmission mediums **1800**, **1820**, **1830** **1836**, **1841** and **1843** will be referred to herein as a cable **1850** with an understanding that cable **1850** can represent any one of the transmission mediums described in the subject disclosure, or a bundling of multiple instances thereof. For illustration purposes only, the dielectric core **1802**, insulated conductor **1825**, bare conductor **1832**, core **1842**, or hollow core **1842'** of the transmission mediums **1800**, **1820**, **1830**, **1836**, **1841** and **1843**, respectively, will be referred to herein as transmission core **1852** with an understanding that cable **1850** can utilize the dielectric core **1802**, insulated conductor **1825**, bare conductor **1832**, core **1842**, or hollow core **1842'** of transmission mediums **1800**, **1820**, **1830**, **1836**, **1841** and/or **1843**, respectively.

Turning now to FIGS. **18**I and **18**J, block diagrams illustrating example, non-limiting embodiments of connector configurations that can be used by cable **1850** are shown. In one embodiment, cable **1850** can be configured with a female connection arrangement or a male connection arrangement as depicted in FIG. **18**I. The male configuration on the right of FIG. **18**I can be accomplished by stripping the dielectric foam **1804** (and jacket **1806** if there is one) to expose a portion of the transmission core **1852**. The female configuration on the left of FIG. **18**I can be accomplished by removing a portion of the transmission core **1852**, while maintaining the dielectric foam **1804** (and jacket **1806** if there is one). In an embodiment in which the transmission core **1852** is hollow as described in relation to FIG. **18**H, the male portion of the transmission core **1852** can represent a hollow core with a rigid outer surface that can slide into the female arrangement on the left side of FIG. **18**I to align the hollow cores together. It is further noted that in the embodiments of FIGS. **18**G-**18**H, the outer ring of conductors **1846** can be modified to connect male and female portions of cable **1850**.

Based on the aforementioned embodiments, the two cables **1850** having male and female connector arrangements can be mated together. A sleeve with an adhesive inner lining or a shrink wrap material (not shown) can be applied to an area of a joint between cables **1850** to maintain the joint in a fixed position and prevent exposure (e.g., to water, soil, etc.). When the cables **1850** are mated, the transmission core **1852** of one cable will be in close proximity to the transmission core **1852** of the other cable. Guided electromagnetic waves propagating by way of either the transmission core **1852** of cables **1850** traveling from either direction can cross over between the disjoint the transmission cores **1852** whether or not the transmission cores **1852** touch, whether or not the transmission cores **1852** are coaxially aligned, and/or whether or not there is a gap between the transmission cores **1852**.

In another embodiment, a splicing device **1860** having female connector arrangements at both ends can be used to mate cables **1850** having male connector arrangements as shown in FIG. **18**J. In an alternative embodiment not shown in FIG. **18**J, the splicing device **1860** can be adapted to have male connector arrangements at both ends which can be mated to cables **1850** having female connector arrangements. In another embodiment not shown in FIG. **18**J, the splicing device **1860** can be adapted to have a male connector arrangement and a female connector arrangement at opposite ends which can be mated to cables **1850** having female and male connector arrangements, respectively. It is further noted that for a transmission core **1852** having a hollow core, the male and female arrangements described in FIG. **18**I can be applied to the splicing device **1860** whether the ends of the splicing device **1860** are both male, both female, or a combination thereof.

The foregoing embodiments for connecting cables illustrated in FIGS. **18**I-**18**J can be applied to each single instance of cable **1838** of bundled transmission media **1836**. Similarly, the foregoing embodiments illustrated in FIGS. **18**I-**18**J can be applied to each single instance of an inner waveguide for a cable **1841** or **1843** having multiple inner waveguides.

Turning now to FIG. **18**K, a block diagram illustrating example, non-limiting embodiments of transmission mediums **1800'**, **1800"**, **1800'"** and **1800""** for propagating guided electromagnetic waves is shown. In an embodiment, a transmission medium **1800'** can include a core **1801**, and a dielectric foam **1804'** divided into sections and covered by a jacket **1806** as shown in FIG. **18**K. The core **1801** can be represented by the dielectric core **1802** of FIG. **18**A, the insulated conductor **1825** of FIG. **18**B, or the bare conductor **1832** of FIG. **18**C. Each section of dielectric foam **1804'** can be separated by a gap (e.g., air, gas, vacuum, or a substance with a low dielectric constant). In an embodiment, the gap separations between the sections of dielectric foam **1804'** can be quasi-random as shown in FIG. **18**K, which can be helpful in reducing reflections of electromagnetic waves occurring at each section of dielectric foam **1804'** as they propagate longitudinally along the core **1801**. The sections of the dielectric foam **1804'** can be constructed, for example, as washers made of a dielectric foam having an inner opening for supporting the core **1801** in a fixed position. For illustration purposes only, the washers will be referred to herein as washers **1804'**. In an embodiment, the inner opening of each washer **1804'** can be coaxially aligned with an axis of the core **1801**. In another embodiment, the inner opening of each washer **1804'** can be offset from the axis of the core **1801**. In another embodiment (not shown), each washer **1804'** can have a variable longitudinal thickness as shown by differences in thickness of the washers **1804'**.

In an alternative embodiment, a transmission medium **1800"** can include a core **1801**, and a strip of dielectric foam **1804"** wrapped around the core in a helix covered by a jacket **1806** as shown in FIG. **18**K. Although it may not be apparent from the drawing shown in FIG. **18**K, in an embodiment the strip of dielectric foam **1804"** can be twisted around the core **1801** with variable pitches (i.e., different twist rates) for different sections of the strip of dielectric foam **1804"**. Utilizing variable pitches can help reduce reflections or other disturbances of the electromagnetic waves occurring between areas of the core **1801** not covered by the strip of dielectric foam **1804"**. It is further noted that the thickness (diameter) of the strip of dielectric foam **1804"** can be substantially larger (e.g., 2 or more times larger) than diameter of the core **1801** shown in FIG. **18**K.

In an alternative embodiment, a transmission medium **1800'"** (shown in a cross-sectional view) can include a non-circular core **1801'** covered by a dielectric foam **1804**

and jacket **1806**. In an embodiment, the non-circular core **1801'** can have an elliptical structure as shown in FIG. **18**K, or other suitable non-circular structure. In another embodiment, the non-circular core **1801'** can have an asymmetric structure. A non-circular core **1801'** can be used to polarize the fields of electromagnetic waves induced on the non-circular core **1801'**. The structure of the non-circular core **1801'** can help preserve the polarization of the electromagnetic waves as they propagate along the non-circular core **1801'**.

In an alternative embodiment, a transmission medium **1800""** (shown in a cross-sectional view) can include multiple cores **1801"** (only two cores are shown but more are possible). The multiple cores **1801"** can be covered by a dielectric foam **1804** and jacket **1806**. The multiple cores **1801"** can be used to polarize the fields of electromagnetic waves induced on the multiple cores **1801"**. The structure of the multiple cores **1801'** can preserve the polarization of the guided electromagnetic waves as they propagate along the multiple cores **1801"**.

It will be appreciated that the embodiments of FIG. **18**K can be used to modify the embodiments of FIGS. **18**G-**18**H. For example, core **1842** or core **1842'** can be adapted to utilized sectionalized shells **1804'** with gaps therebetween, or one or more strips of dielectric foam **1804"**. Similarly, core **1842** or core **1842'** can be adapted to have a non-circular core **1801'** that may have symmetric or asymmetric cross-sectional structure. Additionally, core **1842** or core **1842'** can be adapted to use multiple cores **1801"** in a single inner waveguide, or different numbers of cores when multiple inner waveguides are used. Accordingly, any of the embodiments shown in FIG. **18**K can be applied singly or in combination to the embodiments of **18**G-**18**H.

Turning now to FIG. **18**L is a block diagram illustrating example, non-limiting embodiments of bundled transmission media to mitigate cross-talk in accordance with various aspects described herein. In an embodiment, a bundled transmission medium **1836'** can include variable core structures **1803**. By varying the structures of cores **1803**, fields of guided electromagnetic waves induced in each of the cores of transmission medium **1836'** may differ sufficiently to reduce cross-talk between cables **1838**. In another embodiment, a bundled transmission media **1836"** can include a variable number of cores **1803'** per cable **1838**. By varying the number of cores **1803'** per cable **1838**, fields of guided electromagnetic waves induced in the one or more cores of transmission medium **1836"** may differ sufficiently to reduce cross-talk between cables **1838**. In another embodiment, the cores **1803** or **1803'** can be of different materials. For example, the cores **1803** or **1803'** can be a dielectric core **1802**, an insulated conductor core **1825**, a bare conductor core **1832**, or any combinations thereof.

It is noted that the embodiments illustrated in FIGS. **18**A-**18**D and **18**F-**18**H can be modified by and/or combined with some of the embodiments of FIGS. **18**K-**18**L. It is further noted that one or more of the embodiments illustrated in FIGS. **18**K-**18**L can be combined (e.g., using sectionalized dielectric foam **1804'** or a helix strip of dielectric foam **1804"** with cores **1801'**, **1801"**, **1803** or **1803'**). In some embodiments guided electromagnetic waves propagating in the transmission mediums **1800'**, **1800"**, **1800'"**, and/or **1800""** of FIG. **18**K may experience less propagation losses than guided electromagnetic waves propagating in the transmission mediums **1800**, **1820** and **1830** of FIGS. **18**A-**18**C. Additionally, the embodiments illustrated in FIGS. **18**K-**18**L can be adapted to use the connectivity embodiments illustrated in FIGS. **18**I-**18**J.

Turning now to FIG. **18**M, a block diagram illustrating an example, non-limiting embodiment of exposed tapered stubs from the bundled transmission media **1836** for use as antennas **1855** is shown. Each antenna **1855** can serve as a directional antenna for radiating wireless signals directed to wireless communication devices or for inducing electromagnetic wave propagation on a surface of a transmission medium (e.g., a power line). In an embodiment, the wireless signals radiated by the antennas **1855** can be beam steered by adapting the phase and/or other characteristics of the wireless signals generated by each antenna **1855**. In an embodiment, the antennas **1855** can individually be placed in a pie-pan antenna assembly for directing wireless signals in various directions.

It is further noted that the terms "core", "cladding", "shell", and "foam" as utilized in the subject disclosure can comprise any types of materials (or combinations of materials) that enable electromagnetic waves to remain bound to the core while propagating longitudinally along the core. For example, a strip of dielectric foam **1804"** described earlier can be replaced with a strip of an ordinary dielectric material (e.g., polyethylene) for wrapping around the dielectric core **1802** (referred to herein for illustration purposes only as a "wrap"). In this configuration an average density of the wrap can be small as a result of air space between sections of the wrap. Consequently, an effective dielectric constant of the wrap can be less than the dielectric constant of the dielectric core **1802**, thereby enabling guided electromagnetic waves to remain bound to the core. Accordingly, any of the embodiments of the subject disclosure relating to materials used for core(s) and wrappings about the core(s) can be structurally adapted and/or modified with other dielectric materials that achieve the result of maintaining electromagnetic waves bound to the core(s) while they propagate along the core(s). Additionally, a core in whole or in part as described in any of the embodiments of the subject disclosure can comprise an opaque material (e.g., polyethylene). Accordingly, electromagnetic waves guided and bound to the core will have a non-optical frequency range (e.g., less than the lowest frequency of visible light).

FIGS. **18**N, **18**O, **18**P, **18**Q, **18**R, **18**S and **18**T are block diagrams illustrating example, non-limiting embodiments of a waveguide device for transmitting or receiving electromagnetic waves in accordance with various aspects described herein. In an embodiment, FIG. **18**N illustrates a front view of a waveguide device **1865** having a plurality of slots **1863** (e.g., openings or apertures) for emitting electromagnetic waves having radiated electric fields (e-fields) **1861**. In an embodiment, the radiated e-fields **1861** of pairs of symmetrically positioned slots **1863** (e.g., north and south slots of the waveguide **1865**) can be directed away from each other (i.e., polar opposite radial orientations about the cable **1862**). While the slots **1863** are shown as having a rectangular shape, other shapes such as other polygons, sector and arc shapes, ellipsoid shapes and other shapes are likewise possible. For illustration purposes only, the term north will refer to a relative direction as shown in the figures. All references in the subject disclosure to other directions (e.g., south, east, west, northwest, and so forth) will be relative to northern illustration. In an embodiment, to achieve e-fields with opposing orientations at the north and south slots **1863**, for example, the north and south slots **1863** can be arranged to have a circumferential distance between each other that is approximately one wavelength of electromagnetic waves signals supplied to these slots. The waveguide **1865** can have a cylindrical cavity in a center of the waveguide **1865** to enable placement of a cable **1862**. In one embodiment, the

cable **1862** can comprise an insulated conductor. In another embodiment, the cable **1862** can comprise an uninsulated conductor. In yet other embodiments, the cable **1862** can comprise any of the embodiments of a transmission core **1852** of cable **1850** previously described.

In one embodiment, the cable **1862** can slide into the cylindrical cavity of the waveguide **1865**. In another embodiment, the waveguide **1865** can utilize an assembly mechanism (not shown). The assembly mechanism (e.g., a hinge or other suitable mechanism that provides a way to open the waveguide **1865** at one or more locations) can be used to enable placement of the waveguide **1865** on an outer surface of the cable **1862** or otherwise to assemble separate pieces together to form the waveguide **1865** as shown. According to these and other suitable embodiments, the waveguide **1865** can be configured to wrap around the cable **1862** like a collar.

FIG. **18**O illustrates a side view of an embodiment of the waveguide **1865**. The waveguide **1865** can be adapted to have a hollow rectangular waveguide portion **1867** that receives electromagnetic waves **1866** generated by a transmitter circuit as previously described in the subject disclosure (e.g., see reference **101**, **1000** of FIGS. **1** and **10**A). The electromagnetic waves **1866** can be distributed by the hollow rectangular waveguide portion **1867** into in a hollow collar **1869** of the waveguide **1865**. The rectangular waveguide portion **1867** and the hollow collar **1869** can be constructed of materials suitable for maintaining the electromagnetic waves within the hollow chambers of these assemblies (e.g., carbon fiber materials). It should be noted that while the waveguide portion **1867** is shown and described in a hollow rectangular configuration, other shapes and/or other non-hollow configurations can be employed. In particular, the waveguide portion **1867** can have a square or other polygonal cross section, an arc or sector cross section that is truncated to conform to the outer surface of the cable **1862**, a circular or ellipsoid cross section or cross sectional shape. In addition, the waveguide portion **1867** can be configured as, or otherwise include, a solid dielectric material.

As previously described, the hollow collar **1869** can be configured to emit electromagnetic waves from each slot **1863** with opposite e-fields **1861** at pairs of symmetrically positioned slots **1863** and **1863'**. In an embodiment, the electromagnetic waves emitted by the combination of slots **1863** and **1863'** can in turn induce electromagnetic waves **1868** on that are bound to the cable **1862** for propagation according to a fundamental wave mode without other wave modes present—such as non-fundamental wave modes. In this configuration, the electromagnetic waves **1868** can propagate longitudinally along the cable **1862** to other downstream waveguide systems coupled to the cable **1862**.

It should be noted that since the hollow rectangular waveguide portion **1867** of FIG. **18**O is closer to slot **1863** (at the northern position of the waveguide **1865**), slot **1863** can emit electromagnetic waves having a stronger magnitude than electromagnetic waves emitted by slot **1863'** (at the southern position). To reduce magnitude differences between these slots, slot **1863'** can be made larger than slot **1863**. The technique of utilizing different slot sizes to balance signal magnitudes between slots can be applied to any of the embodiments of the subject disclosure relating to FIGS. **18**N, **18**O, **18**Q, **18**S, **18**U and **18**V—some of which are described below.

In another embodiment, FIG. **18**P depicts a waveguide **1865'** that can be configured to utilize circuitry such as monolithic microwave integrated circuits (MMICs) **1870** each coupled to a signal input **1872** (e.g., coaxial cable that provides a communication signal). The signal input **1872** can be generated by a transmitter circuit as previously described in the subject disclosure (e.g., see reference **101**, **1000** of FIGS. **1** and **10**A) adapted to provide electrical signals to the MMICs **1870**. Each MMIC **1870** can be configured to receive signal **1872** which the MMIC **1870** can modulate and transmit with a radiating element (e.g., an antenna) to emit electromagnetic waves having radiated e-fields **1861**. In one embodiment, the MMIC's **1870** can be configured to receive the same signal **1872**, but transmit electromagnetic waves having e-fields **1861** of opposing orientation. This can be accomplished by configuring one of the MMICs **1870** to transmit electromagnetic waves that are 180 degrees out of phase with the electromagnetic waves transmitted by the other MMIC **1870**. In an embodiment, the combination of the electromagnetic waves emitted by the MMICs **1870** can together induce electromagnetic waves **1868** that are bound to the cable **1862** for propagation according to a fundamental wave mode without other wave modes present—such as non-fundamental wave modes. In this configuration, the electromagnetic waves **1868** can propagate longitudinally along the cable **1862** to other downstream waveguide systems coupled to the cable **1862**.

A tapered horn **1880** can be added to the embodiments of FIGS. **18**O and **18**P to assist in the inducement of the electromagnetic waves **1868** on cable **1862** as depicted in FIGS. **18**Q and **18**R. In an embodiment where the cable **1862** is an uninsulated conductor, the electromagnetic waves induced on the cable **1862** can have a large radial dimension (e.g., 1 meter). To enable use of a smaller tapered horn **1880**, an insulation layer **1879** can be applied on a portion of the cable **1862** at or near the cavity as depicted with hash lines in FIGS. **18**Q and **18**R. The insulation layer **1879** can have a tapered end facing away from the waveguide **1865**. The added insulation enables the electromagnetic waves **1868** initially launched by the waveguide **1865** (or **1865'**) to be tightly bound to the insulation, which in turn reduces the radial dimension of the electromagnetic fields **1868** (e.g., centimeters). As the electromagnetic waves **1868** propagate away from the waveguide **1865** (**1865'**) and reach the tapered end of the insulation layer **1879**, the radial dimension of the electromagnetic waves **1868** begin to increase eventually achieving the radial dimension they would have had had the electromagnetic waves **1868** been induced on the uninsulated conductor without an insulation layer. In the illustration of FIGS. **18**Q and **18**R the tapered end begins at an end of the tapered horn **1880**. In other embodiments, the tapered end of the insulation layer **1879** can begin before or after the end of the tapered horn **1880**. The tapered horn can be metallic or constructed of other conductive material or constructed of a plastic or other non-conductive material that is coated or clad with a dielectric layer or doped with a conductive material to provide reflective properties similar to a metallic horn.

In an embodiment, cable **1862** can comprise any of the embodiments of cable **1850** described earlier. In this embodiment, waveguides **1865** and **1865'** can be coupled to a transmission core **1852** of cable **1850** as depicted in FIGS. **18**S and **18**T. The waveguides **1865** and **1865'** can induce, as previously described, electromagnetic waves **1868** on the transmission core **1852** for propagation entirely or partially within inner layers of cable **1850**.

It is noted that for the foregoing embodiments of FIGS. **18**Q, **18**R, **18**S and **18**T, electromagnetic waves **1868** can be bidirectional. For example, electromagnetic waves **1868** of a different operating frequency can be received by slots **1863**

or MMIC's **1870** of the waveguides **1865** and **1865'**, respectively. Once received, the electromagnetic waves can be converted by a receiver circuit (e.g., see reference **101**, **1000** of FIGS. **1** and **10**A) for generating a communication signal for processing.

Although not shown, it is further noted that the waveguides **1865** and **1865'** can be adapted so that the waveguides **1865** and **1865'** can direct electromagnetic waves **1868** upstream or downstream longitudinally. For example, a first tapered horn **1880** coupled to a first instance of a waveguide **1865** or **1865'** can be directed westerly on cable **1862**, while a second tapered horn **1880** coupled to a second instance of a waveguide **1865** or **1865'** can be directed easterly on cable **1862**. The first and second instances of the waveguides **1865** or **1865'** can be coupled so that in a repeater configuration, signals received by the first waveguide **1865** or **1865'** can be provided to the second waveguide **1865** or **1865'** for retransmission in an easterly direction on cable **1862**. The repeater configuration just described can also be applied from an easterly to westerly direction on cable **1862**.

The waveguide **1865** of FIGS. **18**N, **18**O, **18**Q and **18**S can also be configured to generate electromagnetic fields having only non-fundamental or asymmetric wave modes. FIG. **18**U depicts an embodiment of a waveguide **1865** that can be adapted to generate electromagnetic fields having only non-fundamental wave modes. A median line **1890** represents a separation between slots where electrical currents on a backside (not shown) of a frontal plate of the waveguide **1865** change polarity. For example, electrical currents on the backside of the frontal plate corresponding to e-fields that are radially outward (i.e., point away from a center point of cable **1862**) can in some embodiments be associated with slots located outside of the median line **1890** (e.g., slots **1863**A and **1863**B). Electrical currents on the backside of the frontal plate corresponding to e-fields that are radially inward (i.e., point towards a center point of cable **1862**) can in some embodiments be associated with slots located inside of the median line **1890**. The direction of the currents can depend on the operating frequency of the electromagnetic waves **1866** supplied to the hollow rectangular waveguide portion **1867** (see FIG. **18**O) among other parameters.

For illustration purposes, assume the electromagnetic waves **1866** supplied to the hollow rectangular waveguide portion **1867** have an operating frequency whereby a circumferential distance between slots **1863**A and **1863**B is one full wavelength of the electromagnetic waves **1866**. In this instance, the e-fields of the electromagnetic waves emitted by slots **1863**A and **1863**B point radially outward (i.e., have opposing orientations). When the electromagnetic waves emitted by slots **1863**A and **1863**B are combined, the resulting electromagnetic waves on cable **1862** will propagate according to the fundamental wave mode. In contrast, by repositioning one of the slots (e.g., slot **1863**B) inside the media line **1890** (i.e., slot **1863**C), slot **1863**C will generate electromagnetic waves that have e-fields that are approximately 180 degrees out of phase with the e-fields of the electromagnetic waves generated by slot **1863**A. Consequently, the e-field orientations of the electromagnetic waves generated by slot pairs **1863**A and **1863**C will be substantially aligned. The combination of the electromagnetic waves emitted by slot pairs **1863**A and **1863**C will thus generate electromagnetic waves that are bound to the cable **1862** for propagation according to a non-fundamental wave mode.

To achieve a reconfigurable slot arrangement, waveguide **1865** can be adapted according to the embodiments depicted in FIG. **18**V. Configuration (A) depicts a waveguide **1865** having a plurality of symmetrically positioned slots. Each of the slots **1863** of configuration (A) can be selectively disabled by blocking the slot with a material (e.g., carbon fiber or metal) to prevent the emission of electromagnetic waves. A blocked (or disabled) slot **1863** is shown in black, while an enabled (or unblocked) slot **1863** is shown in white. Although not shown, a blocking material can be placed behind (or in front) of the frontal plate of the waveguide **1865**. A mechanism (not shown) can be coupled to the blocking material so that the blocking material can slide in or out of a particular slot **1863** much like closing or opening a window with a cover. The mechanism can be coupled to a linear motor controllable by circuitry of the waveguide **1865** to selectively enable or disable individual slots **1863**. With such a mechanism at each slot **1863**, the waveguide **1865** can be configured to select different configurations of enabled and disabled slots **1863** as depicted in the embodiments of FIG. **18**V. Other methods or techniques for covering or opening slots (e.g., utilizing rotatable disks behind or in front of the waveguide **1865**) can be applied to the embodiments of the subject disclosure.

In one embodiment, the waveguide system **1865** can be configured to enable certain slots **1863** outside the median line **1890** and disable certain slots **1863** inside the median line **1890** as shown in configuration (B) to generate fundamental waves. Assume, for example, that the circumferential distance between slots **1863** outside the median line **1890** (i.e., in the northern and southern locations of the waveguide system **1865**) is one full wavelength. These slots will therefore have electric fields (e-fields) pointing at certain instances in time radially outward as previously described. In contrast, the slots inside the median line **1890** (i.e., in the western and eastern locations of the waveguide system **1865**) will have a circumferential distance of one-half a wavelength relative to either of the slots **1863** outside the median line. Since the slots inside the median line **1890** are half a wavelength apart, such slots will produce electromagnetic waves having e-fields pointing radially outward. If the western and eastern slots **1863** outside the median line **1890** had been enabled instead of the western and eastern slots inside the median line **1890**, then the e-fields emitted by those slots would have pointed radially inward, which when combined with the electric fields of the northern and southern would produce non-fundamental wave mode propagation. Accordingly, configuration (B) as depicted in FIG. **18**V can be used to generate electromagnetic waves at the northern and southern slots **1863** having e-fields that point radially outward and electromagnetic waves at the western and eastern slots **1863** with e-fields that also point radially outward, which when combined induce electromagnetic waves on cable **1862** having a fundamental wave mode.

In another embodiment, the waveguide system **1865** can be configured to enable a northerly, southerly, westerly and easterly slots **1863** all outside the median line **1890**, and disable all other slots **1863** as shown in configuration (C). Assuming the circumferential distance between a pair of opposing slots (e.g., northerly and southerly, or westerly and easterly) is a full wavelength apart, then configuration (C) can be used to generate electromagnetic waves having a non-fundamental wave mode with some e-fields pointing radially outward and other fields pointing radially inward. In yet another embodiment, the waveguide system **1865** can be configured to enable a northwesterly slot **1863** outside the median line **1890**, enable a southeasterly slot **1863** inside the median line **1890**, and disable all other slots **1863** as shown in configuration (D). Assuming the circumferential distance

between such a pair of slots is a full wavelength apart, then such a configuration can be used to generate electromagnetic waves having a non-fundamental wave mode with e-fields aligned in a northwesterly direction.

In another embodiment, the waveguide system **1865** can be configured to produce electromagnetic waves having a non-fundamental wave mode with e-fields aligned in a southwesterly direction. This can be accomplished by utilizing a different arrangement than used in configuration (D). Configuration (E) can be accomplished by enabling a southwesterly slot **1863** outside the median line **1890**, enabling a northeasterly slot **1863** inside the median line **1890**, and disabling all other slots **1863** as shown in configuration (E). Assuming the circumferential distance between such a pair of slots is a full wavelength apart, then such a configuration can be used to generate electromagnetic waves having a non-fundamental wave mode with e-fields aligned in a southwesterly direction. Configuration (E) thus generates a non-fundamental wave mode that is orthogonal to the non-fundamental wave mode of configuration (D).

In yet another embodiment, the waveguide system **1865** can be configured to generate electromagnetic waves having a fundamental wave mode with e-fields that point radially inward. This can be accomplished by enabling a northerly slot **1863** inside the median line **1890**, enabling a southerly slot **1863** inside the median line **1890**, enabling an easterly slot outside the median **1890**, enabling a westerly slot **1863** outside the median **1890**, and disabling all other slots **1863** as shown in configuration (F). Assuming the circumferential distance between the northerly and southerly slots is a full wavelength apart, then such a configuration can be used to generate electromagnetic waves having a fundamental wave mode with radially inward e-fields. Although the slots selected in configurations (B) and (F) are different, the fundamental wave modes generated by configurations (B) and (F) are the same.

It yet another embodiment, e-fields can be manipulated between slots to generate fundamental or non-fundamental wave modes by varying the operating frequency of the electromagnetic waves **1866** supplied to the hollow rectangular waveguide portion **1867**. For example, assume in the illustration of FIG. **18**U that for a particular operating frequency of the electromagnetic waves **1866** the circumferential distance between slot **1863**A and **1863**B is one full wavelength of the electromagnetic waves **1866**. In this instance, the e-fields of electromagnetic waves emitted by slots **1863**A and **1863**B will point radially outward as shown, and can be used in combination to induce electromagnetic waves on cable **1862** having a fundamental wave mode. In contrast, the e-fields of electromagnetic waves emitted by slots **1863**A and **1863**C will be radially aligned (i.e., pointing northerly) as shown, and can be used in combination to induce electromagnetic waves on cable **1862** having a non-fundamental wave mode.

Now suppose that the operating frequency of the electromagnetic waves **1866** supplied to the hollow rectangular waveguide portion **1867** is changed so that the circumferential distance between slot **1863**A and **1863**B is one-half a wavelength of the electromagnetic waves **1866**. In this instance, the e-fields of electromagnetic waves emitted by slots **1863**A and **1863**B will be radially aligned (i.e., point in the same direction). That is, the e-fields of electromagnetic waves emitted by slot **1863**B will point in the same direction as the e-fields of electromagnetic waves emitted by slot **1863**A. Such electromagnetic waves can be used in combination to induce electromagnetic waves on cable **1862** having a non-fundamental wave mode. In contrast, the e-fields of electromagnetic waves emitted by slots **1863**A and **1863**C will be radially outward (i.e., away from cable **1862**), and can be used in combination to induce electromagnetic waves on cable **1862** having a fundamental wave mode.

In another embodiment, the waveguide **1865'** of FIGS. **18**P, **18**R and **18**T can also be configured to generate electromagnetic waves having only non-fundamental wave modes. This can be accomplished by adding more MMICs **1870** as depicted in FIG. **18**W. Each MMIC **1870** can be configured to receive the same signal input **1872**. However, MMICs **1870** can selectively be configured to emit electromagnetic waves having differing phases using controllable phase-shifting circuitry in each MMIC **1870**. For example, the northerly and southerly MMICs **1870** can be configured to emit electromagnetic waves having a 180 degree phase difference, thereby aligning the e-fields either in a northerly or southerly direction. Any combination of pairs of MMICs **1870** (e.g., westerly and easterly MMICs **1870**, northwesterly and southeasterly MMICs **1870**, northeasterly and southwesterly MMICs **1870**) can be configured with opposing or aligned e-fields. Consequently, waveguide **1865'** can be configured to generate electromagnetic waves with one or more non-fundamental wave modes, electromagnetic waves with one or more fundamental wave modes, or any combinations thereof.

It is submitted that it is not necessary to select slots **1863** in pairs to generate electromagnetic waves having a non-fundamental wave mode. For example, electromagnetic waves having a non-fundamental wave mode can be generated by enabling a single slot from the plurality of slots shown in configuration (A) of FIG. **18**V and disabling all other slots. Similarly, a single MMIC **1870** of the MMICs **1870** shown in FIG. **18**W can be configured to generate electromagnetic waves having a non-fundamental wave mode while all other MMICs **1870** are not in use or disabled. Likewise other wave modes and wave mode combinations can be induced by enabling other non-null proper subsets of waveguide slots **1863** or the MMICs **1870**.

It is further submitted that the e-field arrows shown in FIGS. **18**U-**18**V are illustrative only and represent a static depiction of e-fields. In practice, the electromagnetic waves may have oscillating e-fields, which at one instance in time point outwardly, and at another instance in time point inwardly. For example, in the case of non-fundamental wave modes having e-fields that are aligned in one direction (e.g., northerly), such waves may at another instance in time have e-fields that point in an opposite direction (e.g., southerly). Similarly, fundamental wave modes having e-fields that are radial may at one instance have e-fields that point radially away from the cable **1862** and at another instance in time point radially towards the cable **1862**. It is further noted that the embodiments of FIGS. **18**U-**18**W can be adapted to generate electromagnetic waves with one or more non-fundamental wave modes, electromagnetic waves with one or more fundamental wave modes (e.g., TM00 and HE11 modes), or any combinations thereof. It is further noted that such adaptions can be used in combination with any embodiments described in the subject disclosure. It is also noted that the embodiments of FIGS. **18**U-**18**W can be combined (e.g., slots used in combination with MMICs).

It is further noted that in some embodiments, the waveguide systems **1865** and **1865'** of FIGS. **18**N-**18**W may generate combinations of fundamental and non-fundamental wave modes where one wave mode is dominant over the other. For example, in one embodiment electromagnetic waves generated by the waveguide systems **1865** and **1865'**

of FIGS. **18**N-**18**W may have a weak signal component that has a non-fundamental wave mode, and a substantially strong signal component that has a fundamental wave mode. Accordingly, in this embodiment, the electromagnetic waves have a substantially fundamental wave mode. In another embodiment electromagnetic waves generated by the waveguide systems **1865** and **1865'** of FIGS. **18**N-**18**W may have a weak signal component that has a fundamental wave mode, and a substantially strong signal component that has a non-fundamental wave mode. Accordingly, in this embodiment, the electromagnetic waves have a substantially non-fundamental wave mode. Further, a non-dominant wave mode may be generated that propagates only trivial distances along the length of the transmission medium.

It is also noted that the waveguide systems **1865** and **1865'** of FIGS. **18**N-**18**W can be configured to generate instances of electromagnetic waves that have wave modes that can differ from a resulting wave mode or modes of the combined electromagnetic wave. It is further noted that each MMIC **1870** of the waveguide system **1865'** of FIG. **18**W can be configured to generate an instance of electromagnetic waves having wave characteristics that differ from the wave characteristics of another instance of electromagnetic waves generated by another MMIC **1870**. One MMIC **1870**, for example, can generate an instance of an electromagnetic wave having a spatial orientation and a phase, frequency, magnitude, electric field orientation, and/or magnetic field orientation that differs from the spatial orientation and phase, frequency, magnitude, electric field orientation, and/or magnetic field orientation of a different instance of another electromagnetic wave generated by another MMIC **1870**. The waveguide system **1865'** can thus be configured to generate instances of electromagnetic waves having different wave and spatial characteristics, which when combined achieve resulting electromagnetic waves having one or more desirable wave modes.

From these illustrations, it is submitted that the waveguide systems **1865** and **1865'** of FIGS. **18**N-**18**W can be adapted to generate electromagnetic waves with one or more selectable wave modes. In one embodiment, for example, the waveguide systems **1865** and **1865'** can be adapted to select one or more wave modes and generate electromagnetic waves having a single wave mode or multiple wave modes selected and produced from a process of combining instances of electromagnetic waves having one or more configurable wave and spatial characteristics. In an embodiment, for example, parametric information can be stored in a look-up table. Each entry in the look-up table can represent a selectable wave mode. A selectable wave mode can represent a single wave mode, or a combination of wave modes. The combination of wave modes can have one or dominant wave modes. The parametric information can provide configuration information for generating instances of electromagnetic waves for producing resultant electromagnetic waves that have the desired wave mode.

For example, once a wave mode or modes is selected, the parametric information obtained from the look-up table from the entry associated with the selected wave mode(s) can be used to identify which of one or more MMICs **1870** to utilize, and/or their corresponding configurations to achieve electromagnetic waves having the desired wave mode(s). The parametric information may identify the selection of the one or more MMICs **1870** based on the spatial orientations of the MMICs **1870**, which may be required for producing electromagnetic waves with the desired wave mode. The parametric information can also provide information to configure each of the one or more MMICs **1870** with a particular phase, frequency, magnitude, electric field orientation, and/or magnetic field orientation which may or may not be the same for each of the selected MMICs **1870**. A look-up table with selectable wave modes and corresponding parametric information can be adapted for configuring the slotted waveguide system **1865**.

In some embodiments, a guided electromagnetic wave can be considered to have a desired wave mode if the corresponding wave mode propagates non-trivial distances on a transmission medium and has a field strength that is substantially greater in magnitude (e.g., 20 dB higher in magnitude) than other wave modes that may or may not be desirable. Such a desired wave mode or modes can be referred to as dominant wave mode(s) with the other wave modes being referred to as non-dominant wave modes. In a similar fashion, a guided electromagnetic wave that is said to be substantially without the fundamental wave mode has either no fundamental wave mode or a non-dominant fundamental wave mode. A guided electromagnetic wave that is said to be substantially without a non-fundamental wave mode has either no non-fundamental wave mode(s) or only non-dominant non-fundamental wave mode(s). In some embodiments, a guided electromagnetic wave that is said to have only a single wave mode or a selected wave mode may have only one corresponding dominant wave mode.

It is further noted that the embodiments of FIGS. **18**U-**18**W can be applied to other embodiments of the subject disclosure. For example, the embodiments of FIGS. **18**U-**18**W can be used as alternate embodiments to the embodiments depicted in FIGS. **18**N-**18**T or can be combined with the embodiments depicted in FIGS. **18**N-**18**T.

Turning now to FIGS. **19**A and **19**B, block diagrams illustrating example, non-limiting embodiments of the cable **1850** of FIG. **18**A used for inducing guided electromagnetic waves on power lines supported by utility poles. In one embodiment, as depicted in FIG. **19**A, a cable **1850** can be coupled at one end to a microwave apparatus that launches guided electromagnetic waves within one or more inner layers of cable **1850** utilizing, for example, the hollow waveguide **1808** shown in FIGS. **18**A-**18**C. The microwave apparatus can utilize a microwave transceiver such as shown in FIG. **10**A for transmitting or receiving signals from cable **1850**. The guided electromagnetic waves induced in the one or more inner layers of cable **1850** can propagate to an exposed stub of the cable **1850** located inside a horn antenna (shown as a dotted line in FIG. **19**A) for radiating the electromagnetic waves via the horn antenna. The radiated signals from the horn antenna in turn can induce guided electromagnetic waves that propagate longitudinally on a medium voltage (MV) power line. In one embodiment, the microwave apparatus can receive AC power from a low voltage (e.g., 220V) power line. Alternatively, the horn antenna can be replaced with a stub antenna as shown in FIG. **19**B to induce guided electromagnetic waves that propagate longitudinally on the MV power line or to transmit wireless signals to other antenna system(s).

In alternate embodiments, first and second cables **1850**A' and **1850**B' can be coupled to the microwave apparatus and to a transformer **1952**, respectively, as shown in FIGS. **19**A and **19**B. The first and second cables **1850**A' and **1850**B' can be represented by, for example, cable **1820** or cable **1830** of FIGS. **18**B and **18**C, respectively, each having a conductive core. A first end of the conductive core of the first cable **1850**A' can be coupled to the microwave apparatus for propagating guided electromagnetic waves launched therein. A second end of the conductive core of the first cable **1850**A' can be coupled to a first end of a conductive coil of

the transformer **1952** for receiving the guided electromagnetic waves propagating in the first cable **1850**A' and for supplying signals associated therewith to a first end of a second cable **1850**B' by way of a second end of the conductive coil of the transformer **1952**. A second end of the second cable **1850**B' can be coupled to the horn antenna of FIG. **19**A or can be exposed as a stub antenna of FIG. **19**B for inducing guided electromagnetic waves that propagate longitudinally on the MV power line.

In an embodiment where cable **1850**, **1850**A' and **1850**B' each comprise multiple instances of transmission mediums **1800**, **1820**, and/or **1830**, a poly-rod structure of antennas **1855** can be formed such as shown in FIG. **18**K. Each antenna **1855** can be coupled, for example, to a horn antenna assembly as shown in FIG. **19**A or a pie-pan antenna assembly (not shown) for radiating multiple wireless signals. Alternatively, the antennas **1855** can be used as stub antennas in FIG. **19**B. The microwave apparatus of FIGS. **19**A-**19**B can be configured to adjust the guided electromagnetic waves to beam steer the wireless signals emitted by the antennas **1855**. One or more of the antennas **1855** can also be used for inducing guided electromagnetic waves on a power line.

Turning now to FIG. **19**C, a block diagram of an example, non-limiting embodiment of a communication network **1900** in accordance with various aspects described herein is shown. In one embodiment, for example, the waveguide system **1602** of FIG. **16**A can be incorporated into network interface devices (NIDs) such as NIDs **1910** and **1920** of FIG. **19**C. A NID having the functionality of waveguide system **1602** can be used to enhance transmission capabilities between customer premises **1902** (enterprise or residential) and a pedestal **1904** (sometimes referred to as a service area interface or SAI).

In one embodiment, a central office **1930** can supply one or more fiber cables **1926** to the pedestal **1904**. The fiber cables **1926** can provide high-speed full-duplex data services (e.g., 1-100 Gbps or higher) to mini-DSLAMs **1924** located in the pedestal **1904**. The data services can be used for transport of voice, internet traffic, media content services (e.g., streaming video services, broadcast TV), and so on. In prior art systems, mini-DSLAMs **1924** typically connect to twisted pair phone lines (e.g., twisted pairs included in category 5e or Cat. 5e unshielded twisted-pair (UTP) cables that include an unshielded bundle of twisted pair cables, such as 24 gauge insulated solid wires, surrounded by an outer insulating sheath), which in turn connect to the customer premises **1902** directly. In such systems, DSL data rates taper off at 100 Mbps or less due in part to the length of legacy twisted pair cables to the customer premises **1902** among other factors.

The embodiments of FIG. **19**C, however, are distinct from prior art DSL systems. In the illustration of FIG. **19**C, a mini-DSLAM **1924**, for example, can be configured to connect to NID **1920** via cable **1850** (which can represent in whole or in part any of the cable embodiments described in relation to FIGS. **18**A-**18**D and **18**F-**18**L singly or in combination). Utilizing cable **1850** between customer premises **1902** and a pedestal **1904**, enables NIDs **1910** and **1920** to transmit and receive guide electromagnetic waves for uplink and downlink communications. Based on embodiments previously described, cable **1850** can be exposed to rain, or can be buried without adversely affecting electromagnetic wave propagation either in a downlink path or an uplink path so long as the electric field profile of such waves in either direction is confined at least in part or entirely within inner layers of cable **1850**. In the present illustration, downlink communications represents a communication path from the pedestal **1904** to customer premises **1902**, while uplink communications represents a communication path from customer premises **1902** to the pedestal **1904**. In an embodiment where cable **1850** comprises one of the embodiments of FIGS. **18**G-**18**H, cable **1850** can also serve the purpose of supplying power to the NID **1910** and **1920** and other equipment of the customer premises **1902** and the pedestal **1904**.

In customer premises **1902**, DSL signals can originate from a DSL modem **1906** (which may have a built-in router and which may provide wireless services such as WiFi to user equipment shown in the customer premises **1902**). The DSL signals can be supplied to NID **1910** by a twisted pair phone **1908**. The NID **1910** can utilize the integrated waveguide **1602** to launch within cable **1850** guided electromagnetic waves **1914** directed to the pedestal **1904** on an uplink path. In the downlink path, DSL signals generated by the mini-DSLAM **1924** can flow through a twisted pair phone line **1922** to NID **1920**. The waveguide system **1602** integrated in the NID **1920** can convert the DSL signals, or a portion thereof, from electrical signals to guided electromagnetic waves **1914** that propagate within cable **1850** on the downlink path. To provide full duplex communications, the guided electromagnetic waves **1914** on the uplink can be configured to operate at a different carrier frequency and/or a different modulation approach than the guided electromagnetic waves **1914** on the downlink to reduce or avoid interference. Additionally, on the uplink and downlink paths, the guided electromagnetic waves **1914** are guided by a core section of cable **1850**, as previously described, and such waves can be configured to have a field intensity profile that confines the guide electromagnetic waves in whole or in part in the inner layers of cable **1850**. Although the guided electromagnetic waves **1914** are shown outside of cable **1850**, the depiction of these waves is for illustration purposes only. For this reason, the guided electromagnetic waves **1914** are drawn with "hash marks" to indicate that they are guided by the inner layers of cable **1850**.

On the downlink path, the integrated waveguide system **1602** of NID **1910** receives the guided electromagnetic waves **1914** generated by NID **1920** and converts them back to DSL signals conforming to the requirements of the DSL modem **1906**. The DSL signals are then supplied to the DSL modem **1906** via a set of twisted pair wires of phone line **1908** for processing. Similarly, on the uplink path, the integrated waveguide system **1602** of NID **1920** receives the guided electromagnetic waves **1914** generated by NID **1910** and converts them back to DSL signals conforming to the requirements of the mini-DSLAM **1924**. The DSL signals are then supplied to the mini-DSLAM **1924** via a set of twisted pair wires of phone line **1922** for processing. Because of the short length of phone lines **1908** and **1922**, the DSL modem **1908** and the mini-DSLAM **1924** can send and receive DSL signals between themselves on the uplink and downlink at very high speeds (e.g., 1 Gbps to 60 Gbps or more). Consequently, the uplink and downlink paths can in most circumstances exceed the data rate limits of traditional DSL communications over twisted pair phone lines.

Typically, DSL devices are configured for asymmetric data rates because the downlink path usually supports a higher data rate than the uplink path. However, cable **1850** can provide much higher speeds both on the downlink and uplink paths. With a firmware update, a legacy DSL modem **1906** such as shown in FIG. **19**C can be configured with higher speeds on both the uplink and downlink paths. Similar firmware updates can be made to the mini-DSLAM

1924 to take advantage of the higher speeds on the uplink and downlink paths. Since the interfaces to the DSL modem 1906 and mini-DSLAM 1924 remain as traditional twisted pair phone lines, no hardware change is necessary for a legacy DSL modem or legacy mini-DSLAM other than firmware changes and the addition of the NIDs 1910 and 1920 to perform the conversion from DSL signals to guided electromagnetic waves 1914 and vice-versa. The use of NIDs enables a reuse of legacy modems 1906 and mini-DSLAMs 1924, which in turn can substantially reduce installation costs and system upgrades. For new construction, updated versions of mini-DSLAMs and DSL modems can be configured with integrated waveguide systems to perform the functions described above, thereby eliminating the need for NIDs 1910 and 1920 with integrated waveguide systems. In this embodiment, an updated version of modem 1906 and updated version of mini-DSLAM 1924 would connect directly to cable 1850 and communicate via bidirectional guided electromagnetic wave transmissions, thereby averting a need for transmission or reception of DSL signals using twisted pair phone lines 1908 and 1922.

In an embodiment where use of cable 1850 between the pedestal 1904 and customer premises 1902 is logistically impractical or costly, NID 1910 can be configured instead to couple to a cable 1850' (similar to cable 1850 of the subject disclosure) that originates from a waveguide 108 on a utility pole 118, and which may be buried in soil before it reaches NID 1910 of the customer premises 1902. Cable 1850' can be used to receive and transmit guided electromagnetic waves 1914' between the NID 1910 and the waveguide 108. Waveguide 108 can connect via waveguide 106, which can be coupled to base station 104. Base station 104 can provide data communication services to customer premises 1902 by way of its connection to central office 1930 over fiber 1926'. Similarly, in situations where access from the central office 1926 to pedestal 1904 is not practical over a fiber link, but connectivity to base station 104 is possible via fiber link 1926', an alternate path can be used to connect to NID 1920 of the pedestal 1904 via cable 1850" (similar to cable 1850 of the subject disclosure) originating from pole 116. Cable 1850" can also be buried before it reaches NID 1920.

FIGS. 20A and 20B describe embodiments for downlink and uplink communications. Method 2000 of FIG. 20A can begin with step 2002 where electrical signals (e.g., DSL signals) are generated by a DSLAM (e.g., mini-DSLAM 1924 of pedestal 1904 or from central office 1930), which are converted to guided electromagnetic waves 1914 at step 2004 by NID 1920 and which propagate on a transmission medium such as cable 1850 for providing downlink services to the customer premises 1902. At step 2008, the NID 1910 of the customer premises 1902 converts the guided electromagnetic waves 1914 back to electrical signals (e.g., DSL signals) which are supplied at step 2010 to customer premises equipment (CPE) such as DSL modem 1906 over phone line 1908. Alternatively, or in combination, power and/or guided electromagnetic waves 1914' can be supplied from a power line 1850' of a utility grid (having an inner waveguide as illustrated in FIG. 18G or 18H) to NID 1910 as an alternate or additional downlink (and/or uplink) path.

At 2022 of method 2020 of FIG. 20B, the DSL modem 1906 can supply electrical signals (e.g., DSL signals) via phone line 1908 to NID 1910, which in turn at step 2024, converts the DSL signals to guided electromagnetic waves directed to NID 1920 by way of cable 1850. At step 2028, the NID 1920 of the pedestal 1904 (or central office 1930) converts the guided electromagnetic waves 1914 back to electrical signals (e.g., DSL signals) which are supplied at step 2029 to a DSLAM (e.g., mini-DSLAM 1924). Alternatively, or in combination, power and guided electromagnetic waves 1914' can be supplied from a power line 1850' of a utility grid (having an inner waveguide as illustrated in FIG. 18G or 18H) to NID 1920 as an alternate or additional uplink (and/or downlink) path.

Turning now to FIG. 20C, a flow diagram of an example, non-limiting embodiment of a method 2030 for inducing electromagnetic waves on a transmission medium is shown. At step 2032, the waveguides 1865 and 1865' of FIGS. 18N-18T can be configured to generate first electromagnetic waves from a first communication signal (supplied, for example, by a communication device), and induce at step 2034 the first electromagnetic waves with "only" a fundamental wave mode at an interface of the transmission medium. In an embodiment, the interface can be an outer surface of the transmission medium as depicted in FIGS. 18Q and 18R. In another embodiment, the interface can be an inner layer of the transmission medium as depicted in FIGS. 18S and 18T. Turning now to FIG. 20D, a flow diagram of an example, non-limiting embodiment of a method 2040 for receiving electromagnetic waves from a transmission medium is shown. At step 2042, the waveguides 1865 and 1865' of FIGS. 18N-18T can be configured to receive second electromagnetic waves at an interface of a same or different transmission medium described in FIG. 20C. In an embodiment, the second electromagnetic waves can have "only" a fundamental wave mode. In other embodiments, the second electromagnetic waves may have a combination of wave modes such as a fundamental and non-fundamental wave modes. At step 2044, a second communication signal can be generated from the second electromagnetic waves for processing by, for example, a same or different communication device. The embodiments of FIGS. 20C and 20D can be applied to any embodiments described in the subject disclosure.

Turning now to FIG. 20E, a flow diagram of an example, non-limiting embodiment of a method 2050 for inducing electromagnetic waves on a transmission medium is shown. At step 2052, the waveguides 1865 and 1865' of FIGS. 18N-18W can be configured to generate first electromagnetic waves from a first communication signal (supplied, for example, by a communication device), and induce at step 2054 second electromagnetic waves with "only" a non-fundamental wave mode at an interface of the transmission medium. In an embodiment, the interface can be an outer surface of the transmission medium as depicted in FIGS. 18Q and 18R. In another embodiment, the interface can be an inner layer of the transmission medium as depicted in FIGS. 18S and 18T. Turning now to FIG. 20F, a flow diagram of an example, non-limiting embodiment of a method 2060 for receiving electromagnetic waves from a transmission medium is shown. At step 2062, the waveguides 1865 and 1865' of FIGS. 18N-18W can be configured to receive electromagnetic waves at an interface of a same or different transmission medium described in FIG. 20E. In an embodiment, the electromagnetic waves can have "only" a non-fundamental wave mode. In other embodiments, the electromagnetic waves may have a combination of wave modes such as a fundamental and non-fundamental wave modes. At step 2064, a second communication signal can be generated from the electromagnetic waves for processing by, for example, a same or different communication device. The embodiments of FIGS. 20E and 20F can be applied to any embodiments described in the subject disclosure.

While for purposes of simplicity of explanation, the respective processes are shown and described as a series of

blocks in FIGS. **20**A-**20**F, it is to be understood and appreciated that the claimed subject matter is not limited by the order of the blocks, as some blocks may occur in different orders and/or concurrently with other blocks from what is depicted and described herein. Moreover, not all illustrated blocks may be required to implement the methods described herein.

Referring now to FIG. **21**, there is illustrated a block diagram of a computing environment in accordance with various aspects described herein. In order to provide additional context for various embodiments of the embodiments described herein, FIG. **21** and the following discussion are intended to provide a brief, general description of a suitable computing environment **2100** in which the various embodiments of the subject disclosure can be implemented. While the embodiments have been described above in the general context of computer-executable instructions that can run on one or more computers, those skilled in the art will recognize that the embodiments can be also implemented in combination with other program modules and/or as a combination of hardware and software.

Generally, program modules comprise routines, programs, components, data structures, etc., that perform particular tasks or implement particular abstract data types. Moreover, those skilled in the art will appreciate that the inventive methods can be practiced with other computer system configurations, comprising single-processor or multiprocessor computer systems, minicomputers, mainframe computers, as well as personal computers, hand-held computing devices, microprocessor-based or programmable consumer electronics, and the like, each of which can be operatively coupled to one or more associated devices.

As used herein, a processing circuit includes processor as well as other application specific circuits such as an application specific integrated circuit, digital logic circuit, state machine, programmable gate array or other circuit that processes input signals or data and that produces output signals or data in response thereto. It should be noted that while any functions and features described herein in association with the operation of a processor could likewise be performed by a processing circuit.

The terms "first," "second," "third," and so forth, as used in the claims, unless otherwise clear by context, is for clarity only and doesn't otherwise indicate or imply any order in time. For instance, "a first determination," "a second determination," and "a third determination," does not indicate or imply that the first determination is to be made before the second determination, or vice versa, etc.

The illustrated embodiments of the embodiments herein can be also practiced in distributed computing environments where certain tasks are performed by remote processing devices that are linked through a communications network. In a distributed computing environment, program modules can be located in both local and remote memory storage devices.

Computing devices typically comprise a variety of media, which can comprise computer-readable storage media and/or communications media, which two terms are used herein differently from one another as follows. Computer-readable storage media can be any available storage media that can be accessed by the computer and comprises both volatile and nonvolatile media, removable and non-removable media. By way of example, and not limitation, computer-readable storage media can be implemented in connection with any method or technology for storage of information such as computer-readable instructions, program modules, structured data or unstructured data.

Computer-readable storage media can comprise, but are not limited to, random access memory (RAM), read only memory (ROM), electrically erasable programmable read only memory (EEPROM), flash memory or other memory technology, compact disk read only memory (CD-ROM), digital versatile disk (DVD) or other optical disk storage, magnetic cassettes, magnetic tape, magnetic disk storage or other magnetic storage devices or other tangible and/or non-transitory media which can be used to store desired information. In this regard, the terms "tangible" or "non-transitory" herein as applied to storage, memory or computer-readable media, are to be understood to exclude only propagating transitory signals per se as modifiers and do not relinquish rights to all standard storage, memory or computer-readable media that are not only propagating transitory signals per se.

Computer-readable storage media can be accessed by one or more local or remote computing devices, e.g., via access requests, queries or other data retrieval protocols, for a variety of operations with respect to the information stored by the medium.

Communications media typically embody computer-readable instructions, data structures, program modules or other structured or unstructured data in a data signal such as a modulated data signal, e.g., a carrier wave or other transport mechanism, and comprises any information delivery or transport media. The term "modulated data signal" or signals refers to a signal that has one or more of its characteristics set or changed in such a manner as to encode information in one or more signals. By way of example, and not limitation, communication media comprise wired media, such as a wired network or direct-wired connection, and wireless media such as acoustic, RF, infrared and other wireless media.

With reference again to FIG. **21**, the example environment **2100** for transmitting and receiving signals via or forming at least part of a base station (e.g., base station devices **1504**, macrocell site **1502**, or base stations **1614**) or central office (e.g., central office **1501** or **1611**). At least a portion of the example environment **2100** can also be used for transmission devices **101** or **102**. The example environment can comprise a computer **2102**, the computer **2102** comprising a processing unit **2104**, a system memory **2106** and a system bus **2108**. The system bus **2108** couple's system components including, but not limited to, the system memory **2106** to the processing unit **2104**. The processing unit **2104** can be any of various commercially available processors. Dual microprocessors and other multiprocessor architectures can also be employed as the processing unit **2104**.

The system bus **2108** can be any of several types of bus structure that can further interconnect to a memory bus (with or without a memory controller), a peripheral bus, and a local bus using any of a variety of commercially available bus architectures. The system memory **2106** comprises ROM **2110** and RAM **2112**. A basic input/output system (BIOS) can be stored in a non-volatile memory such as ROM, erasable programmable read only memory (EPROM), EEPROM, which BIOS contains the basic routines that help to transfer information between elements within the computer **2102**, such as during startup. The RAM **2112** can also comprise a high-speed RAM such as static RAM for caching data.

The computer **2102** further comprises an internal hard disk drive (HDD) **2114** (e.g., EIDE, SATA), which internal hard disk drive **2114** can also be configured for external use in a suitable chassis (not shown), a magnetic floppy disk drive (FDD) **2116**, (e.g., to read from or write to a removable

diskette **2118**) and an optical disk drive **2120**, (e.g., reading a CD-ROM disk **2122** or, to read from or write to other high capacity optical media such as the DVD). The hard disk drive **2114**, magnetic disk drive **2116** and optical disk drive **2120** can be connected to the system bus **2108** by a hard disk drive interface **2124**, a magnetic disk drive interface **2126** and an optical drive interface **2128**, respectively. The interface **2124** for external drive implementations comprises at least one or both of Universal Serial Bus (USB) and Institute of Electrical and Electronics Engineers (IEEE) 1394 interface technologies. Other external drive connection technologies are within contemplation of the embodiments described herein.

The drives and their associated computer-readable storage media provide nonvolatile storage of data, data structures, computer-executable instructions, and so forth. For the computer **2102**, the drives and storage media accommodate the storage of any data in a suitable digital format. Although the description of computer-readable storage media above refers to a hard disk drive (HDD), a removable magnetic diskette, and a removable optical media such as a CD or DVD, it should be appreciated by those skilled in the art that other types of storage media which are readable by a computer, such as zip drives, magnetic cassettes, flash memory cards, cartridges, and the like, can also be used in the example operating environment, and further, that any such storage media can contain computer-executable instructions for performing the methods described herein.

A number of program modules can be stored in the drives and RAM **2112**, comprising an operating system **2130**, one or more application programs **2132**, other program modules **2134** and program data **2136**. All or portions of the operating system, applications, modules, and/or data can also be cached in the RAM **2112**. The systems and methods described herein can be implemented utilizing various commercially available operating systems or combinations of operating systems. Examples of application programs **2132** that can be implemented and otherwise executed by processing unit **2104** include the diversity selection determining performed by transmission device **101** or **102**.

A user can enter commands and information into the computer **2102** through one or more wired/wireless input devices, e.g., a keyboard **2138** and a pointing device, such as a mouse **2140**. Other input devices (not shown) can comprise a microphone, an infrared (IR) remote control, a joystick, a game pad, a stylus pen, touch screen or the like. These and other input devices are often connected to the processing unit **2104** through an input device interface **2142** that can be coupled to the system bus **2108**, but can be connected by other interfaces, such as a parallel port, an IEEE 1394 serial port, a game port, a universal serial bus (USB) port, an IR interface, etc.

A monitor **2144** or other type of display device can be also connected to the system bus **2108** via an interface, such as a video adapter **2146**. It will also be appreciated that in alternative embodiments, a monitor **2144** can also be any display device (e.g., another computer having a display, a smart phone, a tablet computer, etc.) for receiving display information associated with computer **2102** via any communication means, including via the Internet and cloud-based networks. In addition to the monitor **2144**, a computer typically comprises other peripheral output devices (not shown), such as speakers, printers, etc.

The computer **2102** can operate in a networked environment using logical connections via wired and/or wireless communications to one or more remote computers, such as a remote computer(s) **2148**. The remote computer(s) **2148** can be a workstation, a server computer, a router, a personal computer, portable computer, microprocessor-based entertainment appliance, a peer device or other common network node, and typically comprises many or all of the elements described relative to the computer **2102**, although, for purposes of brevity, only a memory/storage device **2150** is illustrated. The logical connections depicted comprise wired/wireless connectivity to a local area network (LAN) **2152** and/or larger networks, e.g., a wide area network (WAN) **2154**. Such LAN and WAN networking environments are commonplace in offices and companies, and facilitate enterprise-wide computer networks, such as intranets, all of which can connect to a global communications network, e.g., the Internet.

When used in a LAN networking environment, the computer **2102** can be connected to the local network **2152** through a wired and/or wireless communication network interface or adapter **2156**. The adapter **2156** can facilitate wired or wireless communication to the LAN **2152**, which can also comprise a wireless AP disposed thereon for communicating with the wireless adapter **2156**.

When used in a WAN networking environment, the computer **2102** can comprise a modem **2158** or can be connected to a communications server on the WAN **2154** or has other means for establishing communications over the WAN **2154**, such as by way of the Internet. The modem **2158**, which can be internal or external and a wired or wireless device, can be connected to the system bus **2108** via the input device interface **2142**. In a networked environment, program modules depicted relative to the computer **2102** or portions thereof, can be stored in the remote memory/storage device **2150**. It will be appreciated that the network connections shown are example and other means of establishing a communications link between the computers can be used.

The computer **2102** can be operable to communicate with any wireless devices or entities operatively disposed in wireless communication, e.g., a printer, scanner, desktop and/or portable computer, portable data assistant, communications satellite, any piece of equipment or location associated with a wirelessly detectable tag (e.g., a kiosk, news stand, restroom), and telephone. This can comprise Wireless Fidelity (Wi-Fi) and BLUETOOTH® wireless technologies. Thus, the communication can be a predefined structure as with a conventional network or simply an ad hoc communication between at least two devices.

Wi-Fi can allow connection to the Internet from a couch at home, a bed in a hotel room or a conference room at work, without wires. Wi-Fi is a wireless technology similar to that used in a cell phone that enables such devices, e.g., computers, to send and receive data indoors and out; anywhere within the range of a base station. Wi-Fi networks use radio technologies called IEEE 802.11 (a, b, g, n, ac, ag etc.) to provide secure, reliable, fast wireless connectivity. A Wi-Fi network can be used to connect computers to each other, to the Internet, and to wired networks (which can use IEEE 802.3 or Ethernet). Wi-Fi networks operate in the unlicensed 2.4 and 5 GHz radio bands for example or with products that contain both bands (dual band), so the networks can provide real-world performance similar to the basic 10BaseT wired Ethernet networks used in many offices.

FIG. **22** presents an example embodiment **2200** of a mobile network platform **2210** that can implement and exploit one or more aspects of the disclosed subject matter described herein. In one or more embodiments, the mobile network platform **2210** can generate and receive signals transmitted and received by base stations (e.g., base station

devices **1504**, macrocell site **1502**, or base stations **1614**), central office (e.g., central office **1501** or **1611**), or transmission device **101** or **102** associated with the disclosed subject matter. Generally, wireless network platform **2210** can comprise components, e.g., nodes, gateways, interfaces, servers, or disparate platforms, that facilitate both packet-switched (PS) (e.g., internet protocol (IP), frame relay, asynchronous transfer mode (ATM)) and circuit-switched (CS) traffic (e.g., voice and data), as well as control generation for networked wireless telecommunication. As a non-limiting example, wireless network platform **2210** can be included in telecommunications carrier networks, and can be considered carrier-side components as discussed elsewhere herein. Mobile network platform **2210** comprises CS gateway node(s) **2222** which can interface CS traffic received from legacy networks like telephony network(s) **2240** (e.g., public switched telephone network (PSTN), or public land mobile network (PLMN)) or a signaling system #7 (SS7) network **2270**. Circuit switched gateway node(s) **2222** can authorize and authenticate traffic (e.g., voice) arising from such networks. Additionally, CS gateway node(s) **2222** can access mobility, or roaming, data generated through SS7 network **2270**; for instance, mobility data stored in a visited location register (VLR), which can reside in memory **2230**. Moreover, CS gateway node(s) **2222** interfaces CS-based traffic and signaling and PS gateway node(s) **2218**. As an example, in a 3GPP UMTS network, CS gateway node(s) **2222** can be realized at least in part in gateway GPRS support node(s) (GGSN). It should be appreciated that functionality and specific operation of CS gateway node(s) **2222**, PS gateway node(s) **2218**, and serving node(s) **2216**, is provided and dictated by radio technology(ies) utilized by mobile network platform **2210** for telecommunication.

In addition to receiving and processing CS-switched traffic and signaling, PS gateway node(s) **2218** can authorize and authenticate PS-based data sessions with served mobile devices. Data sessions can comprise traffic, or content(s), exchanged with networks external to the wireless network platform **2210**, like wide area network(s) (WANs) **2250**, enterprise network(s) **2270**, and service network(s) **2280**, which can be embodied in local area network(s) (LANs), can also be interfaced with mobile network platform **2210** through PS gateway node(s) **2218**. It is to be noted that WANs **2250** and enterprise network(s) **2260** can embody, at least in part, a service network(s) like IP multimedia subsystem (IMS). Based on radio technology layer(s) available in technology resource(s) **2217**, packet-switched gateway node(s) **2218** can generate packet data protocol contexts when a data session is established; other data structures that facilitate routing of packetized data also can be generated. To that end, in an aspect, PS gateway node(s) **2218** can comprise a tunnel interface (e.g., tunnel termination gateway (TTG) in 3GPP UMTS network(s) (not shown)) which can facilitate packetized communication with disparate wireless network(s), such as Wi-Fi networks.

In embodiment **2200**, wireless network platform **2210** also comprises serving node(s) **2216** that, based upon available radio technology layer(s) within technology resource(s) **2217**, convey the various packetized flows of data streams received through PS gateway node(s) **2218**. It is to be noted that for technology resource(s) **2217** that rely primarily on CS communication, server node(s) can deliver traffic without reliance on PS gateway node(s) **2218**; for example, server node(s) can embody at least in part a mobile switching center. As an example, in a 3GPP UMTS network, serving node(s) **2216** can be embodied in serving GPRS support node(s) (SGSN).

For radio technologies that exploit packetized communication, server(s) **2214** in wireless network platform **2210** can execute numerous applications that can generate multiple disparate packetized data streams or flows, and manage (e.g., schedule, queue, format . . .) such flows. Such application(s) can comprise add-on features to standard services (for example, provisioning, billing, customer support . . .) provided by wireless network platform **2210**. Data streams (e.g., content(s) that are part of a voice call or data session) can be conveyed to PS gateway node(s) **2218** for authorization/authentication and initiation of a data session, and to serving node(s) **2216** for communication thereafter. In addition to application server, server(s) **2214** can comprise utility server(s), a utility server can comprise a provisioning server, an operations and maintenance server, a security server that can implement at least in part a certificate authority and firewalls as well as other security mechanisms, and the like. In an aspect, security server(s) secure communication served through wireless network platform **2210** to ensure network's operation and data integrity in addition to authorization and authentication procedures that CS gateway node(s) **2222** and PS gateway node(s) **2218** can enact. Moreover, provisioning server(s) can provision services from external network(s) like networks operated by a disparate service provider; for instance, WAN **2250** or Global Positioning System (GPS) network(s) (not shown). Provisioning server(s) can also provision coverage through networks associated to wireless network platform **2210** (e.g., deployed and operated by the same service provider), such as the distributed antennas networks shown in FIG. **1**(*s*) that enhance wireless service coverage by providing more network coverage. Repeater devices such as those shown in FIGS. **7**, **8**, and **9** also improve network coverage in order to enhance subscriber service experience by way of UE **2275**.

It is to be noted that server(s) **2214** can comprise one or more processors configured to confer at least in part the functionality of macro network platform **2210**. To that end, the one or more processor can execute code instructions stored in memory **2230**, for example. It is should be appreciated that server(s) **2214** can comprise a content manager **2215**, which operates in substantially the same manner as described hereinbefore.

In example embodiment **2200**, memory **2230** can store information related to operation of wireless network platform **2210**. Other operational information can comprise provisioning information of mobile devices served through wireless platform network **2210**, subscriber databases; application intelligence, pricing schemes, e.g., promotional rates, flat-rate programs, couponing campaigns; technical specification(s) consistent with telecommunication protocols for operation of disparate radio, or wireless, technology layers; and so forth. Memory **2230** can also store information from at least one of telephony network(s) **2240**, WAN **2250**, enterprise network(s) **2270**, or SS7 network **2260**. In an aspect, memory **2230** can be, for example, accessed as part of a data store component or as a remotely connected memory store.

In order to provide a context for the various aspects of the disclosed subject matter, FIG. **22**, and the following discussion, are intended to provide a brief, general description of a suitable environment in which the various aspects of the disclosed subject matter can be implemented. While the subject matter has been described above in the general context of computer-executable instructions of a computer

program that runs on a computer and/or computers, those skilled in the art will recognize that the disclosed subject matter also can be implemented in combination with other program modules. Generally, program modules comprise routines, programs, components, data structures, etc. that perform particular tasks and/or implement particular abstract data types.

FIG. **23** depicts an illustrative embodiment of a communication device **2300**. The communication device **2300** can serve as an illustrative embodiment of devices such as mobile devices and in-building devices referred to by the subject disclosure (e.g., in FIGS. **15**, **16**A and **16**B).

The communication device **2300** can comprise a wireline and/or wireless transceiver **2302** (herein transceiver **2302**), a user interface (UI) **2304**, a power supply **2314**, a location receiver **2316**, a motion sensor **2318**, an orientation sensor **2320**, and a controller **2306** for managing operations thereof. The transceiver **2302** can support short-range or long-range wireless access technologies such as Bluetooth®, ZigBee®, WiFi, DECT, or cellular communication technologies, just to mention a few (Bluetooth® and ZigBee are trademarks registered by the Bluetooth Special Interest Group and the ZigBee® Alliance, respectively). Cellular technologies can include, for example, CDMA-1X, UMTS/HSDPA, GSM/GPRS, TDMA/EDGE, EV/DO, WiMAX, SDR, LTE, as well as other next generation wireless communication technologies as they arise. The transceiver **2302** can also be adapted to support circuit-switched wireline access technologies (such as PSTN), packet-switched wireline access technologies (such as TCP/IP, VoIP, etc.), and combinations thereof.

The UI **2304** can include a depressible or touch-sensitive keypad **2308** with a navigation mechanism such as a roller ball, a joystick, a mouse, or a navigation disk for manipulating operations of the communication device **2300**. The keypad **2308** can be an integral part of a housing assembly of the communication device **2300** or an independent device operably coupled thereto by a tethered wireline interface (such as a USB cable) or a wireless interface supporting for example Bluetooth®. The keypad **2308** can represent a numeric keypad commonly used by phones, and/or a QWERTY keypad with alphanumeric keys. The UI **2304** can further include a display **2310** such as monochrome or color LCD (Liquid Crystal Display), OLED (Organic Light Emitting Diode) or other suitable display technology for conveying images to an end user of the communication device **2300**. In an embodiment where the display **2310** is touch-sensitive, a portion or all of the keypad **2308** can be presented by way of the display **2310** with navigation features.

The display **2310** can use touch screen technology to also serve as a user interface for detecting user input. As a touch screen display, the communication device **2300** can be adapted to present a user interface having graphical user interface (GUI) elements that can be selected by a user with a touch of a finger. The touch screen display **2310** can be equipped with capacitive, resistive or other forms of sensing technology to detect how much surface area of a user's finger has been placed on a portion of the touch screen display. This sensing information can be used to control the manipulation of the GUI elements or other functions of the user interface. The display **2310** can be an integral part of the housing assembly of the communication device **2300** or an independent device communicatively coupled thereto by a tethered wireline interface (such as a cable) or a wireless interface.

The UI **2304** can also include an audio system **2312** that utilizes audio technology for conveying low volume audio (such as audio heard in proximity of a human ear) and high volume audio (such as speakerphone for hands free operation). The audio system **2312** can further include a microphone for receiving audible signals of an end user. The audio system **2312** can also be used for voice recognition applications. The UI **2304** can further include an image sensor **2313** such as a charged coupled device (CCD) camera for capturing still or moving images.

The power supply **2314** can utilize common power management technologies such as replaceable and rechargeable batteries, supply regulation technologies, and/or charging system technologies for supplying energy to the components of the communication device **2300** to facilitate long-range or short-range portable communications. Alternatively, or in combination, the charging system can utilize external power sources such as DC power supplied over a physical interface such as a USB port or other suitable tethering technologies.

The location receiver **2316** can utilize location technology such as a global positioning system (GPS) receiver capable of assisted GPS for identifying a location of the communication device **2300** based on signals generated by a constellation of GPS satellites, which can be used for facilitating location services such as navigation. The motion sensor **2318** can utilize motion sensing technology such as an accelerometer, a gyroscope, or other suitable motion sensing technology to detect motion of the communication device **2300** in three-dimensional space. The orientation sensor **2320** can utilize orientation sensing technology such as a magnetometer to detect the orientation of the communication device **2300** (north, south, west, and east, as well as combined orientations in degrees, minutes, or other suitable orientation metrics).

The communication device **2300** can use the transceiver **2302** to also determine a proximity to a cellular, WiFi, Bluetooth®, or other wireless access points by sensing techniques such as utilizing a received signal strength indicator (RSSI) and/or signal time of arrival (TOA) or time of flight (TOF) measurements. The controller **2306** can utilize computing technologies such as a microprocessor, a digital signal processor (DSP), programmable gate arrays, application specific integrated circuits, and/or a video processor with associated storage memory such as Flash, ROM, RAM, SRAM, DRAM or other storage technologies for executing computer instructions, controlling, and processing data supplied by the aforementioned components of the communication device **2300**.

Other components not shown in FIG. **23** can be used in one or more embodiments of the subject disclosure. For instance, the communication device **2300** can include a slot for adding or removing an identity module such as a Subscriber Identity Module (SIM) card or Universal Integrated Circuit Card (UICC). SIM or UICC cards can be used for identifying subscriber services, executing programs, storing subscriber data, and so on.

In the subject specification, terms such as "store," "storage," "data store," data storage," "database," and substantially any other information storage component relevant to operation and functionality of a component, refer to "memory components," or entities embodied in a "memory" or components comprising the memory. It will be appreciated that the memory components described herein can be either volatile memory or nonvolatile memory, or can comprise both volatile and nonvolatile memory, by way of illustration, and not limitation, volatile memory, non-volatile memory, disk storage, and memory storage. Further, non-

volatile memory can be included in read only memory (ROM), programmable ROM (PROM), electrically programmable ROM (EPROM), electrically erasable ROM (EEPROM), or flash memory. Volatile memory can comprise random access memory (RAM), which acts as external cache memory. By way of illustration and not limitation, RAM is available in many forms such as synchronous RAM (SRAM), dynamic RAM (DRAM), synchronous DRAM (SDRAM), double data rate SDRAM (DDR SDRAM), enhanced SDRAM (ESDRAM), Synchlink DRAM (SLDRAM), and direct Rambus RAM (DRRAM). Additionally, the disclosed memory components of systems or methods herein are intended to comprise, without being limited to comprising, these and any other suitable types of memory.

Moreover, it will be noted that the disclosed subject matter can be practiced with other computer system configurations, comprising single-processor or multiprocessor computer systems, mini-computing devices, mainframe computers, as well as personal computers, hand-held computing devices (e.g., PDA, phone, smartphone, watch, tablet computers, netbook computers, etc.), microprocessor-based or programmable consumer or industrial electronics, and the like. The illustrated aspects can also be practiced in distributed computing environments where tasks are performed by remote processing devices that are linked through a communications network; however, some if not all aspects of the subject disclosure can be practiced on stand-alone computers. In a distributed computing environment, program modules can be located in both local and remote memory storage devices.

Some of the embodiments described herein can also employ artificial intelligence (AI) to facilitate automating one or more features described herein. For example, artificial intelligence can be used in optional training controller **230** evaluate and select candidate frequencies, modulation schemes, MIMO modes, and/or guided wave modes in order to maximize transfer efficiency. The embodiments (e.g., in connection with automatically identifying acquired cell sites that provide a maximum value/benefit after addition to an existing communication network) can employ various AI-based schemes for carrying out various embodiments thereof. Moreover, the classifier can be employed to determine a ranking or priority of the each cell site of the acquired network. A classifier is a function that maps an input attribute vector, x=(x1, x2, x3, x4, . . . , xn), to a confidence that the input belongs to a class, that is, f(x)=confidence (class). Such classification can employ a probabilistic and/or statistical-based analysis (e.g., factoring into the analysis utilities and costs) to prognose or infer an action that a user desires to be automatically performed. A support vector machine (SVM) is an example of a classifier that can be employed. The SVM operates by finding a hypersurface in the space of possible inputs, which the hypersurface attempts to split the triggering criteria from the non-triggering events. Intuitively, this makes the classification correct for testing data that is near, but not identical to training data. Other directed and undirected model classification approaches comprise, e.g., naïve Bayes, Bayesian networks, decision trees, neural networks, fuzzy logic models, and probabilistic classification models providing different patterns of independence can be employed. Classification as used herein also is inclusive of statistical regression that is utilized to develop models of priority.

As will be readily appreciated, one or more of the embodiments can employ classifiers that are explicitly trained (e.g., via a generic training data) as well as implicitly trained (e.g., via observing UE behavior, operator preferences, historical information, receiving extrinsic information). For example, SVMs can be configured via a learning or training phase within a classifier constructor and feature selection module. Thus, the classifier(s) can be used to automatically learn and perform a number of functions, including but not limited to determining according to a predetermined criteria which of the acquired cell sites will benefit a maximum number of subscribers and/or which of the acquired cell sites will add minimum value to the existing communication network coverage, etc.

As used in some contexts in this application, in some embodiments, the terms "component," "system" and the like are intended to refer to, or comprise, a computer-related entity or an entity related to an operational apparatus with one or more specific functionalities, wherein the entity can be either hardware, a combination of hardware and software, software, or software in execution. As an example, a component may be, but is not limited to being, a process running on a processor, a processor, an object, an executable, a thread of execution, computer-executable instructions, a program, and/or a computer. By way of illustration and not limitation, both an application running on a server and the server can be a component. One or more components may reside within a process and/or thread of execution and a component may be localized on one computer and/or distributed between two or more computers. In addition, these components can execute from various computer readable media having various data structures stored thereon. The components may communicate via local and/or remote processes such as in accordance with a signal having one or more data packets (e.g., data from one component interacting with another component in a local system, distributed system, and/or across a network such as the Internet with other systems via the signal). As another example, a component can be an apparatus with specific functionality provided by mechanical parts operated by electric or electronic circuitry, which is operated by a software or firmware application executed by a processor, wherein the processor can be internal or external to the apparatus and executes at least a part of the software or firmware application. As yet another example, a component can be an apparatus that provides specific functionality through electronic components without mechanical parts, the electronic components can comprise a processor therein to execute software or firmware that confers at least in part the functionality of the electronic components. While various components have been illustrated as separate components, it will be appreciated that multiple components can be implemented as a single component, or a single component can be implemented as multiple components, without departing from example embodiments.

Further, the various embodiments can be implemented as a method, apparatus or article of manufacture using standard programming and/or engineering techniques to produce software, firmware, hardware or any combination thereof to control a computer to implement the disclosed subject matter. The term "article of manufacture" as used herein is intended to encompass a computer program accessible from any computer-readable device or computer-readable storage/communications media. For example, computer readable storage media can include, but are not limited to, magnetic storage devices (e.g., hard disk, floppy disk, magnetic strips), optical disks (e.g., compact disk (CD), digital versatile disk (DVD)), smart cards, and flash memory devices (e.g., card, stick, key drive). Of course, those skilled in the

art will recognize many modifications can be made to this configuration without departing from the scope or spirit of the various embodiments.

In addition, the words "example" and "exemplary" are used herein to mean serving as an instance or illustration. Any embodiment or design described herein as "example" or "exemplary" is not necessarily to be construed as preferred or advantageous over other embodiments or designs. Rather, use of the word example or exemplary is intended to present concepts in a concrete fashion. As used in this application, the term "or" is intended to mean an inclusive "or" rather than an exclusive "or". That is, unless specified otherwise or clear from context, "X employs A or B" is intended to mean any of the natural inclusive permutations. That is, if X employs A; X employs B; or X employs both A and B, then "X employs A or B" is satisfied under any of the foregoing instances. In addition, the articles "a" and "an" as used in this application and the appended claims should generally be construed to mean "one or more" unless specified otherwise or clear from context to be directed to a singular form.

Moreover, terms such as "user equipment," "mobile station," "mobile," subscriber station," "access terminal," "terminal," "handset," "mobile device" (and/or terms representing similar terminology) can refer to a wireless device utilized by a subscriber or user of a wireless communication service to receive or convey data, control, voice, video, sound, gaming or substantially any data-stream or signaling-stream. The foregoing terms are utilized interchangeably herein and with reference to the related drawings.

Furthermore, the terms "user," "subscriber," "customer," "consumer" and the like are employed interchangeably throughout, unless context warrants particular distinctions among the terms. It should be appreciated that such terms can refer to human entities or automated components supported through artificial intelligence (e.g., a capacity to make inference based, at least, on complex mathematical formalisms), which can provide simulated vision, sound recognition and so forth.

As employed herein, the term "processor" can refer to substantially any computing processing unit or device comprising, but not limited to comprising, single-core processors; single-processors with software multithread execution capability; multi-core processors; multi-core processors with software multithread execution capability; multi-core processors with hardware multithread technology; parallel platforms; and parallel platforms with distributed shared memory. Additionally, a processor can refer to an integrated circuit, an application specific integrated circuit (ASIC), a digital signal processor (DSP), a field programmable gate array (FPGA), a programmable logic controller (PLC), a complex programmable logic device (CPLD), a discrete gate or transistor logic, discrete hardware components or any combination thereof designed to perform the functions described herein. Processors can exploit nano-scale architectures such as, but not limited to, molecular and quantum-dot based transistors, switches and gates, in order to optimize space usage or enhance performance of user equipment. A processor can also be implemented as a combination of computing processing units.

As used herein, terms such as "data storage," data storage," "database," and substantially any other information storage component relevant to operation and functionality of a component, refer to "memory components," or entities embodied in a "memory" or components comprising the memory. It will be appreciated that the memory components or computer-readable storage media, described herein can be either volatile memory or nonvolatile memory or can include both volatile and nonvolatile memory.

What has been described above includes mere examples of various embodiments. It is, of course, not possible to describe every conceivable combination of components or methodologies for purposes of describing these examples, but one of ordinary skill in the art can recognize that many further combinations and permutations of the present embodiments are possible. Accordingly, the embodiments disclosed and/or claimed herein are intended to embrace all such alterations, modifications and variations that fall within the spirit and scope of the appended claims. Furthermore, to the extent that the term "includes" is used in either the detailed description or the claims, such term is intended to be inclusive in a manner similar to the term "comprising" as "comprising" is interpreted when employed as a transitional word in a claim.

In addition, a flow diagram may include a "start" and/or "continue" indication. The "start" and "continue" indications reflect that the steps presented can optionally be incorporated in or otherwise used in conjunction with other routines. In this context, "start" indicates the beginning of the first step presented and may be preceded by other activities not specifically shown. Further, the "continue" indication reflects that the steps presented may be performed multiple times and/or may be succeeded by other activities not specifically shown. Further, while a flow diagram indicates a particular ordering of steps, other orderings are likewise possible provided that the principles of causality are maintained.

As may also be used herein, the term(s) "operably coupled to", "coupled to", and/or "coupling" includes direct coupling between items and/or indirect coupling between items via one or more intervening items. Such items and intervening items include, but are not limited to, junctions, communication paths, components, circuit elements, circuits, functional blocks, and/or devices. As an example of indirect coupling, a signal conveyed from a first item to a second item may be modified by one or more intervening items by modifying the form, nature or format of information in a signal, while one or more elements of the information in the signal are nevertheless conveyed in a manner than can be recognized by the second item. In a further example of indirect coupling, an action in a first item can cause a reaction on the second item, as a result of actions and/or reactions in one or more intervening items.

Although specific embodiments have been illustrated and described herein, it should be appreciated that any arrangement which achieves the same or similar purpose may be substituted for the embodiments described or shown by the subject disclosure. The subject disclosure is intended to cover any and all adaptations or variations of various embodiments. Combinations of the above embodiments, and other embodiments not specifically described herein, can be used in the subject disclosure. For instance, one or more features from one or more embodiments can be combined with one or more features of one or more other embodiments. In one or more embodiments, features that are positively recited can also be negatively recited and excluded from the embodiment with or without replacement by another structural and/or functional feature. The steps or functions described with respect to the embodiments of the subject disclosure can be performed in any order. The steps or functions described with respect to the embodiments of the subject disclosure can be performed alone or in combination with other steps or functions of the subject disclosure, as well as from other embodiments or from other steps that

have not been described in the subject disclosure. Further, more than or less than all of the features described with respect to an embodiment can also be utilized.

What is claimed is:

1. A method, comprising:

generating, by radiating elements of a plurality of circuits of a waveguide system, instances of first electromagnetic waves; and

directing, by the waveguide system, the instances of the first electromagnetic waves to an interface of a transmission medium to induce propagation of a combined electromagnetic wave without utilizing an electrical return path, the combined electromagnetic wave having at least a dominant non-fundamental wave mode, and the combined electromagnetic wave having a non-optical operating frequency.

2. The method of claim **1**, wherein first and second circuits of the plurality of circuits are configured to generate the instances of the first electromagnetic waves with electric field orientations that are substantially aligned.

3. The method of claim **1**, wherein the radiating elements comprise an antenna.

4. The method of claim **1**, wherein the plurality of circuits comprise a plurality of microwave circuits.

5. The method of claim **4**, wherein each of the plurality of microwave circuits comprise a transmitter portion for transmitting the instances of the first electromagnetic waves.

6. The method of claim **5**, wherein each of the plurality of microwave circuits further comprises a receiver portion for receiving second electromagnetic waves.

7. The method of claim **1**, further comprising receiving, by the plurality of circuits, second electromagnetic waves guided by the transmission medium.

8. The method of claim **1**, wherein at least the dominant non-fundamental wave mode of the combined electromagnetic wave has a spatial orientation based on a position of at least one of the plurality of circuits surrounding the transmission medium.

9. The method of claim **1**, wherein the directing the instances of the first electromagnetic waves comprises:

configuring a first circuit of the plurality of circuits to generate an electromagnetic wave having a first phase; and

configuring a second circuit of the plurality of circuits to generate the electromagnetic wave having a second phase.

10. The method of claim **9**, wherein first electric fields of the electromagnetic wave having the first phase and second electric fields of the electromagnetic wave having the second phase are asymmetric and thereby produce when combined at least the dominant non-fundamental wave mode.

11. The method of claim **1**, wherein the waveguide system comprises a waveguide structure for directing the instances of the first electromagnetic waves to the interface of the transmission medium.

12. The method of claim **11**, wherein the waveguide structure has a tapered cross-section.

13. The method of claim **11**, wherein the waveguide structure has a cylindrical cross-section.

14. The method of claim **1**, wherein the interface of the transmission medium comprises a core, and wherein the combined electromagnetic wave is guided and bound to the core.

15. The method of claim **1**, wherein the interface of the transmission medium comprises an outer surface of an insulated conductor or uninsulated conductor for guiding the combined electromagnetic wave.

16. A system, comprising:

an interface for receiving a signal; and

a plurality of transmitters for launching, according to the signal, instances of electromagnetic waves having different phases to induce propagation of a combined electromagnetic wave at an interface of a transmission medium, the combined electromagnetic wave substantially having a non-fundamental wave mode, and the combined electromagnetic wave having a non-optical operating frequency.

17. The system of claim **16**, wherein first and second transmitters of the plurality of transmitters are configured to generate the instances of the electromagnetic waves, each instance having electric field orientations that are substantially asymmetric.

18. The system of claim **16**, wherein the plurality of transmitters surround the transmission medium, and wherein the non-fundamental wave mode of the combined electromagnetic wave has a spatial orientation based on a position of at least one of the plurality of transmitters.

19. A method, comprising:

selecting, by a waveguide system, a non-fundamental wave mode from a plurality of selectable wave modes;

configuring at least one adjustable transmitter of a plurality of adjustable transmitters of the waveguide system according to parametric information associated with the non-fundamental wave mode selected;

generating, by the at least one adjustable transmitter configured according to the parametric information, at least one instance of a first electromagnetic wave; and

directing, by the waveguide system, the at least one instance of the first electromagnetic wave to an interface of a transmission medium for inducing a second electromagnetic wave having the non-fundamental wave mode selected.

20. The method of claim **19**, wherein the parametric information comprises a selectable frequency, a selectable phase, a selectable magnitude, a selectable electric field orientation, a selectable magnetic field orientation, a selectable field intensity, or any combinations thereof.

21. The method of claim **19**, wherein the plurality of selectable wave modes comprises selectable fundamental wave modes and selectable non-fundamental wave modes.

22. The method of claim **19**, wherein the non-fundamental wave mode comprises a combination of a non-dominant fundamental wave mode and a dominant non-fundamental wave mode.

23. The method of claim **19**, wherein the non-fundamental wave mode comprises a combination of a dominant non-fundamental wave mode and non-dominant wave mode.

24. The method of claim **19**, wherein the interface of the transmission medium comprises a core, and wherein the second electromagnetic wave is guided and bound to the core.

25. The method of claim **19**, wherein the interface of the transmission medium comprises an outer surface of an insulated conductor or an uninsulated conductor, and wherein the second electromagnetic wave is guided and bound to the outer surface of the insulated conductor or the uninsulated conductor.

* * * * *