US009696758B2

(12) United States Patent
Nielsen et al.

(10) Patent No.: US 9,696,758 B2
(45) Date of Patent: Jul. 4, 2017

(54) **LOCATING EQUIPMENT DOCKING STATION COMMUNICATIVELY COUPLED TO OR EQUIPPED WITH A MOBILE/PORTABLE DEVICE**

(71) Applicant: **CertusView Technologies, LLC**, North Palm Beach, FL (US)

(72) Inventors: **Steven E. Nielsen**, North Palm Beach, FL (US); **Curtis Chambers**, Palm Beach Gardens, FL (US); **Jeffrey Farr**, Royal Palm Beach, FL (US); **Tony Davani**, Boynton Beach, FL (US)

(73) Assignee: **CertusView Technologies, LLP**, Palm Beach Gardens, FL (US)

(*) Notice: Subject to any disclaimer, the term of this patent is extended or adjusted under 35 U.S.C. 154(b) by 147 days.

(21) Appl. No.: **14/455,169**

(22) Filed: **Aug. 8, 2014**

(65) **Prior Publication Data**

US 2015/0185778 A1 Jul. 2, 2015

Related U.S. Application Data

(63) Continuation of application No. 13/017,880, filed on Jan. 31, 2011, now Pat. No. 8,805,640.

(60) Provisional application No. 61/299,492, filed on Jan. 29, 2010.

(51) **Int. Cl.**

G06F 19/00	(2011.01)
G06F 1/16	(2006.01)
G06F 3/048	(2013.01)

(52) **U.S. Cl.**

CPC ***G06F 1/1632*** (2013.01); ***G06F 1/1635*** (2013.01); ***G06F 3/048*** (2013.01)

(58) **Field of Classification Search**

CPC G06Q 10/06; G06Q 50/08; G01V 3/15
USPC 702/130, 150, 182–185, 188
See application file for complete search history.

(56) **References Cited**

U.S. PATENT DOCUMENTS

5,529,433	A	6/1996	Huynh
6,188,392	B1	2/2001	O'Connor et al.
6,285,911	B1	9/2001	Watts et al.
6,477,588	B1	11/2002	Yerazunis
6,650,293	B1	11/2003	Eslambolchi

(Continued)

OTHER PUBLICATIONS

Opinion and Order filed Aug. 2, 2016; Case 2:13-cv-346-MSD-RJK; *CertusView Technologies, LLC* v. *S&N Locating Services, LLC et al.* (Eastern District of Virginia).

(Continued)

Primary Examiner — Edward Raymond
(74) *Attorney, Agent, or Firm* — Cooley LLP

(57) **ABSTRACT**

A docking station to dock locating equipment (e.g., marking devices, locate devices, combined locate and marking devices) may be communicatively coupled to and/or equipped with a mobile/portable device (e.g., a mobile phone, personal digital assistant or other portable computing device) that provides processing, electronic storage, electronic display, user interface, communication facilities and/or other functionality (e.g., GPS-enabled functionality) for the docking station. A mobile/portable device may be mechanically and/or electrically coupled to the docking station. The mobile/portable device may provide redundant, shared and/or backup functionality for the docking station to enhance robustness. In one example, the mobile/portable device itself serves as a docking station for the locating equipment.

25 Claims, 28 Drawing Sheets

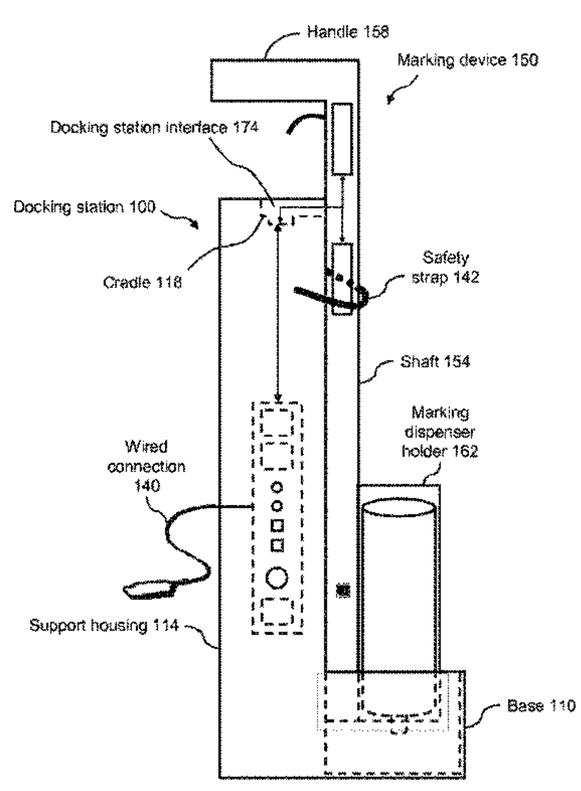

(56) **References Cited**

U.S. PATENT DOCUMENTS

6,686,910 B2 2/2004 O'Donnell
6,879,836 B2 4/2005 Nakamoto et al.
6,956,564 B1 10/2005 Williams
7,372,247 B1 5/2008 Giusti et al.
7,640,105 B2 12/2009 Nielsen et al.
7,741,848 B1 * 6/2010 Olsson G01V 3/15 324/326
7,889,124 B2 2/2011 Islam et al.
7,990,151 B2 8/2011 Olsson
8,060,304 B2 11/2011 Nielsen et al.
8,155,390 B2 4/2012 Nielsen et al.
8,194,932 B2 6/2012 Nielsen et al.
8,218,827 B2 7/2012 Nielsen et al.
8,249,306 B2 8/2012 Nielsen et al.
8,260,489 B2 9/2012 Nielsen et al.
8,265,344 B2 9/2012 Nielsen et al.
8,270,666 B2 9/2012 Nielsen et al.
8,280,117 B2 10/2012 Nielsen et al.
8,280,631 B2 10/2012 Nielsen et al.
8,280,969 B2 10/2012 Nielsen et al.
8,290,204 B2 10/2012 Nielsen et al.
8,290,215 B2 10/2012 Nielsen et al.
8,296,308 B2 10/2012 Nielsen et al.
8,300,895 B2 10/2012 Nielsen et al.
8,301,380 B2 10/2012 Nielsen et al.
8,311,765 B2 11/2012 Nielsen et al.
8,340,359 B2 12/2012 Nielsen et al.
8,355,542 B2 1/2013 Nielsen et al.
8,356,255 B2 1/2013 Nielsen et al.
8,361,543 B2 1/2013 Nielsen et al.
8,374,789 B2 2/2013 Nielsen et al.
8,384,742 B2 2/2013 Nielsen et al.
8,386,178 B2 2/2013 Nielsen et al.
8,401,791 B2 3/2013 Nielsen et al.
8,407,001 B2 3/2013 Nielsen et al.
8,416,995 B2 4/2013 Nielsen et al.
8,457,893 B2 6/2013 Nielsen et al.
8,463,487 B2 6/2013 Nielsen et al.
8,467,932 B2 6/2013 Nielsen et al.
8,467,969 B2 6/2013 Nielsen et al.
8,468,206 B2 6/2013 Nielsen et al.
8,473,148 B2 6/2013 Nielsen et al.
8,473,209 B2 6/2013 Nielsen et al.
8,476,906 B2 7/2013 Nielsen et al.
8,478,523 B2 7/2013 Nielsen et al.
8,478,524 B2 7/2013 Nielsen et al.
8,478,525 B2 7/2013 Nielsen et al.
8,478,617 B2 7/2013 Nielsen et al.
8,478,635 B2 7/2013 Nielsen et al.
8,480,332 B2 7/2013 Miller
8,484,300 B2 7/2013 Nielsen et al.
8,510,141 B2 8/2013 Nielsen et al.
8,532,341 B2 9/2013 Nielsen et al.
8,532,342 B2 9/2013 Nielsen et al.
8,543,651 B2 9/2013 Nielsen et al.
8,543,937 B2 9/2013 Nielsen et al.
8,549,084 B2 10/2013 Nielsen et al.
8,560,164 B2 10/2013 Nielsen et al.
8,566,737 B2 10/2013 Nielsen et al.
8,572,193 B2 10/2013 Nielsen et al.
8,577,707 B2 11/2013 Nielsen et al.
8,583,264 B2 11/2013 Nielsen et al.
8,583,372 B2 11/2013 Nielsen et al.
8,589,201 B2 11/2013 Nielsen et al.
8,589,202 B2 11/2013 Nielsen et al.
8,600,526 B2 12/2013 Nielsen et al.
8,600,848 B2 12/2013 Nielsen et al.
8,612,090 B2 12/2013 Nielsen et al.
8,612,148 B2 12/2013 Nielsen et al.
8,612,271 B2 12/2013 Nielsen et al.
8,612,276 B1 12/2013 Nielsen et al.
8,620,572 B2 12/2013 Nielsen et al.
8,620,587 B2 12/2013 Nielsen et al.
8,620,616 B2 12/2013 Nielsen et al.
8,620,726 B2 12/2013 Nielsen et al.
8,626,571 B2 1/2014 Nielsen et al.
8,630,463 B2 1/2014 Nielsen et al.
8,644,965 B2 2/2014 Nielsen et al.
8,700,325 B2 4/2014 Nielsen et al.
8,731,830 B2 5/2014 Nielsen et al.
8,731,999 B2 5/2014 Nielsen et al.
8,749,239 B2 6/2014 Nielsen et al.
8,766,638 B2 7/2014 Nielsen et al.
8,770,140 B2 7/2014 Nielsen et al.
8,775,077 B2 7/2014 Nielsen et al.
8,805,640 B2 8/2014 Nielsen et al.
8,990,100 B2 3/2015 Nielsen et al.
9,177,280 B2 11/2015 Nielsen et al.
9,183,646 B2 11/2015 Nielsen et al.
2006/0220955 A1 10/2006 Hamilton
2008/0084212 A1 4/2008 Wieland
2009/0062887 A1 3/2009 Mass et al.
2009/0149894 A1 6/2009 Merry et al.
2009/0201311 A1 8/2009 Nielsen et al.
2009/0204238 A1 8/2009 Nielsen et al.
2009/0204466 A1 8/2009 Nielsen et al.
2009/0207019 A1 8/2009 Nielsen et al.
2009/0210285 A1 8/2009 Nielsen et al.
2009/0210298 A1 8/2009 Nielsen et al.
2009/0238415 A1 9/2009 Nielsen et al.
2009/0327024 A1 12/2009 Nielsen et al.
2010/0002365 A1 1/2010 Mulcahey
2010/0006667 A1 1/2010 Nielsen et al.
2010/0010862 A1 1/2010 Nielsen et al.
2010/0010863 A1 1/2010 Nielsen et al.
2010/0010882 A1 1/2010 Nielsen et al.
2010/0010883 A1 1/2010 Nielsen et al.
2010/0088031 A1 4/2010 Nielsen et al.
2010/0088134 A1 4/2010 Nielsen et al.
2010/0088164 A1 4/2010 Nielsen et al.
2010/0090700 A1 4/2010 Nielsen et al.
2010/0117654 A1 5/2010 Nielsen et al.
2010/0188088 A1 7/2010 Nielsen et al.
2010/0188407 A1 7/2010 Nielsen et al.
2010/0189312 A1 7/2010 Nielsen et al.
2010/0189887 A1 7/2010 Nielsen et al.
2010/0198663 A1 8/2010 Nielsen et al.
2010/0201690 A1 8/2010 Nielsen et al.
2010/0205031 A1 8/2010 Nielsen et al.
2010/0205032 A1 8/2010 Nielsen et al.
2010/0205536 A1 8/2010 Nielsen et al.
2010/0245086 A1 9/2010 Nielsen et al.
2010/0253511 A1 10/2010 Nielsen et al.
2010/0253513 A1 10/2010 Nielsen et al.
2010/0253514 A1 10/2010 Nielsen et al.
2010/0256981 A1 10/2010 Nielsen et al.
2010/0257029 A1 10/2010 Nielsen et al.
2010/0257477 A1 10/2010 Nielsen et al.
2010/0272885 A1 10/2010 Olsson
2010/0285211 A1 11/2010 Nielsen et al.
2010/0318401 A1 12/2010 Nielsen et al.
2010/0318402 A1 12/2010 Nielsen et al.
2010/0318465 A1 12/2010 Nielsen et al.
2011/0007076 A1 1/2011 Nielsen et al.
2011/0020776 A1 1/2011 Nielsen et al.
2011/0022433 A1 1/2011 Nielsen et al.
2011/0035245 A1 2/2011 Nielsen et al.
2011/0035251 A1 2/2011 Nielsen et al.
2011/0035252 A1 2/2011 Nielsen et al.
2011/0035260 A1 2/2011 Nielsen et al.
2011/0035324 A1 2/2011 Nielsen et al.
2011/0035328 A1 2/2011 Nielsen et al.
2011/0040589 A1 2/2011 Nielsen et al.
2011/0040590 A1 2/2011 Nielsen et al.
2011/0045175 A1 2/2011 Nielsen et al.
2011/0046993 A1 2/2011 Nielsen et al.
2011/0046994 A1 2/2011 Nielsen et al.
2011/0093306 A1 4/2011 Nielsen et al.
2011/0279229 A1 11/2011 Nielsen et al.
2011/0279230 A1 11/2011 Nielsen et al.
2011/0279476 A1 11/2011 Nielsen et al.
2011/0283217 A1 11/2011 Nielsen et al.
2011/0285749 A1 11/2011 Nielsen et al.
2012/0019380 A1 1/2012 Nielsen et al.

(56) **References Cited**

U.S. PATENT DOCUMENTS

2012/0036140	A1	2/2012	Nielsen et al.
2012/0065924	A1	3/2012	Nielsen et al.
2012/0065944	A1	3/2012	Nielsen et al.
2012/0066137	A1	3/2012	Nielsen et al.
2012/0066273	A1	3/2012	Nielsen et al.
2012/0066506	A1	3/2012	Nielsen et al.
2012/0069178	A1	3/2012	Nielsen et al.
2012/0072035	A1	3/2012	Nielsen et al.
2012/0110019	A1	5/2012	Nielsen et al.
2012/0113244	A1	5/2012	Nielsen et al.
2012/0274476	A1	11/2012	Nielsen et al.
2012/0328162	A1	12/2012	Nielsen et al.
2012/0330849	A1	12/2012	Nielsen et al.
2013/0002854	A1	1/2013	Nielsen et al.
2013/0006718	A1	1/2013	Nielsen et al.
2013/0044918	A1	2/2013	Nielsen et al.
2013/0103318	A1	4/2013	Nielsen et al.
2013/0135343	A1	5/2013	Nielsen et al.
2013/0147637	A1	6/2013	Nielsen et al.
2013/0174072	A9	7/2013	Nielsen et al.
2013/0186333	A1	7/2013	Nielsen et al.
2013/0194303	A1	8/2013	Nielsen et al.
2013/0231984	A1	9/2013	Nielsen et al.
2013/0233883	A1	9/2013	Nielsen et al.
2013/0251894	A1	9/2013	Nielsen et al.
2013/0265138	A1	10/2013	Nielsen et al.
2013/0268199	A1	10/2013	Nielsen et al.
2013/0287500	A1	10/2013	Miller
2013/0315449	A1	11/2013	Nielsen et al.
2014/0022272	A1	1/2014	Nielsen et al.
2014/0035587	A1	2/2014	Nielsen et al.
2014/0074970	A1	3/2014	Nielsen et al.
2014/0122149	A1	5/2014	Nielsen et al.
2014/0236656	A1	8/2014	Nielsen et al.
2014/0278661	A1	9/2014	Nielsen et al.
2014/0321717	A1	10/2014	Nielsen et al.
2014/0334878	A1	11/2014	Miller
2014/0347396	A1	11/2014	Nielsen et al.
2015/0009608	A1	1/2015	Nielsen et al.
2015/0170089	A1	6/2015	Nielsen et al.
2015/0193717	A1	7/2015	Nielsen et al.
2015/0234819	A1	8/2015	Nielsen et al.
2015/0253449	A1	9/2015	Nielsen et al.
2015/0269500	A1	9/2015	Nielsen et al.
2015/0339607	A1	11/2015	Nielsen et al.

OTHER PUBLICATIONS

Opinion and Order Denying Plaintiff's Motion for Partial Reconsideration of the Court's Judgment of Patent Ineligibility under 35 U.S.C. § 101 filed Aug. 10, 20116; Case 2:13-cv-346-MSD-RJK; *CertusView Technologies, LLC* v. *S&N Locating Services, LLC et al.* (Eastern District of Virginia).

Transcript of Bench Trial Proceedings, vol. 1A, pp. 1-89, Mar. 8, 2016; Case 2:13-cv-346-MSD-RJK; *CertusView Technologies, LLC* v. *S&N Locating Services, LLC et al.* (Eastern District of Virginia).

Transcript of Bench Trial Proceedings, vol. 1B (Afternoon Session), Mar. 8, 2016; Case 2:13-cv-346-MSD-RJK; *CertusView Technologies, LLC* v. *S&N Locating Services, LLC et al.* (Eastern District of Virginia).

Transcript of Bench Trial Proceedings, vol. 2A, pp. 99-216, Mar. 9, 2016; Case 2:13-cv-346-MSD-RJK; *CertusView Technologies, LLC* v. *S&N Locating Services, LLC et al.* (Eastern District of Virginia).

Transcript of Bench Trial Proceedings, vol. 2B (Afternoon Session), Mar. 9, 2016; Case 2:13-cv-346-MSD-RJK; *CertusView Technologies, LLC* v. *S&N Locating Services, LLC et al.* (Eastern District of Virginia).

Transcript of Bench Trial Proceedings, vol. 3A, pp. 429-554, Mar. 10, 2016; Case 2:13-cv-346-MSD-RJK; *CertusView Technologies, LLC* v. *S&N Locating Services, LLC et al.* (Eastern District of Virginia).

Transcript of Bench Trial Proceedings, vol. 3B, (Afternoon Session), Mar. 10, 2016; Case 2:13-cv-346-MSD-RJK; *CertusView Technologies, LLC* v. *S&N Locating Services, LLC et al.* (Eastern District of Virginia).

Transcript of Bench Trial Proceedings, vol. 4A (Morning Session), Mar. 11, 2016; Case 2:13-cv-346-MSD-RJK; *CertusView Technologies, LLC* v. *S&N Locating Services, LLC et al.* (Eastern District of Virginia).

Transcript of Bench Trial Proceedings, vol. 4B, pp. 779-921, Mar. 11, 2016; Case 2:13-cv-346-MSD-RJK; *CertusView Technologies, LLC* v. *S&N Locating Services, LLC et al.* (Eastern District of Virginia).

Transcript of Bench Trial Proceedings, vol. 5A, pp. 922-1065, Mar. 14, 2016; Case 2:13-cv-346-MSD-RJK; *CertusView Technologies, LLC* v. *S&N Locating Services, LLC et al.* (Eastern District of Virginia).

Transcript of Bench Trial Proceedings, vol. 5B, (Afternoon Session), Mar. 14, 2016; Case 2:13-cv-346-MSD-RJK; *CertusView Technologies, LLC* v. *S&N Locating Services, LLC et al.* (Eastern District of Virginia).

Notice of Allowance dated Nov. 28, 2011 from Canadian Application No. 2,710,269.

Office Action dated Apr. 10, 2012 from U.S. Appl. No. 12/854,370.

Notice of Allowance dated Sep. 5, 2012 from U.S. Appl. No. 12/854,370.

International Search Report and Written Opinion, Application No. PCT/US11/23208, Mar. 25, 2011.

Office Action dated Jan. 9, 2013 from U.S. Appl. No. 12/571,411.

Office Action dated Jul. 12, 2012 from U.S. Appl. No. 12/571,411.

International Search Report and Written Opinion, Application No. PCT/US10/45161, Oct. 29, 2010.

Notice of Allowance dated Apr. 9, 2014 from U.S. Appl. No.

Office Action dated Dec. 20, 2013 from U.S. Appl. No. 13/017,880.

Nielsen et al., co-pending U.S. Pat. No. 8,311,765, issued Nov. 13, 2012.

Nielsen et al., co-pending U.S. Publication No. 2013-0268199, published Oct. 10, 2013.

Nielsen et al., co-pending U.S. Pat. No. 8,805,640, issued Aug. 12, 2014.

Office Action dated Feb. 9, 2016 from European Application No. 10808689.3.

* cited by examiner

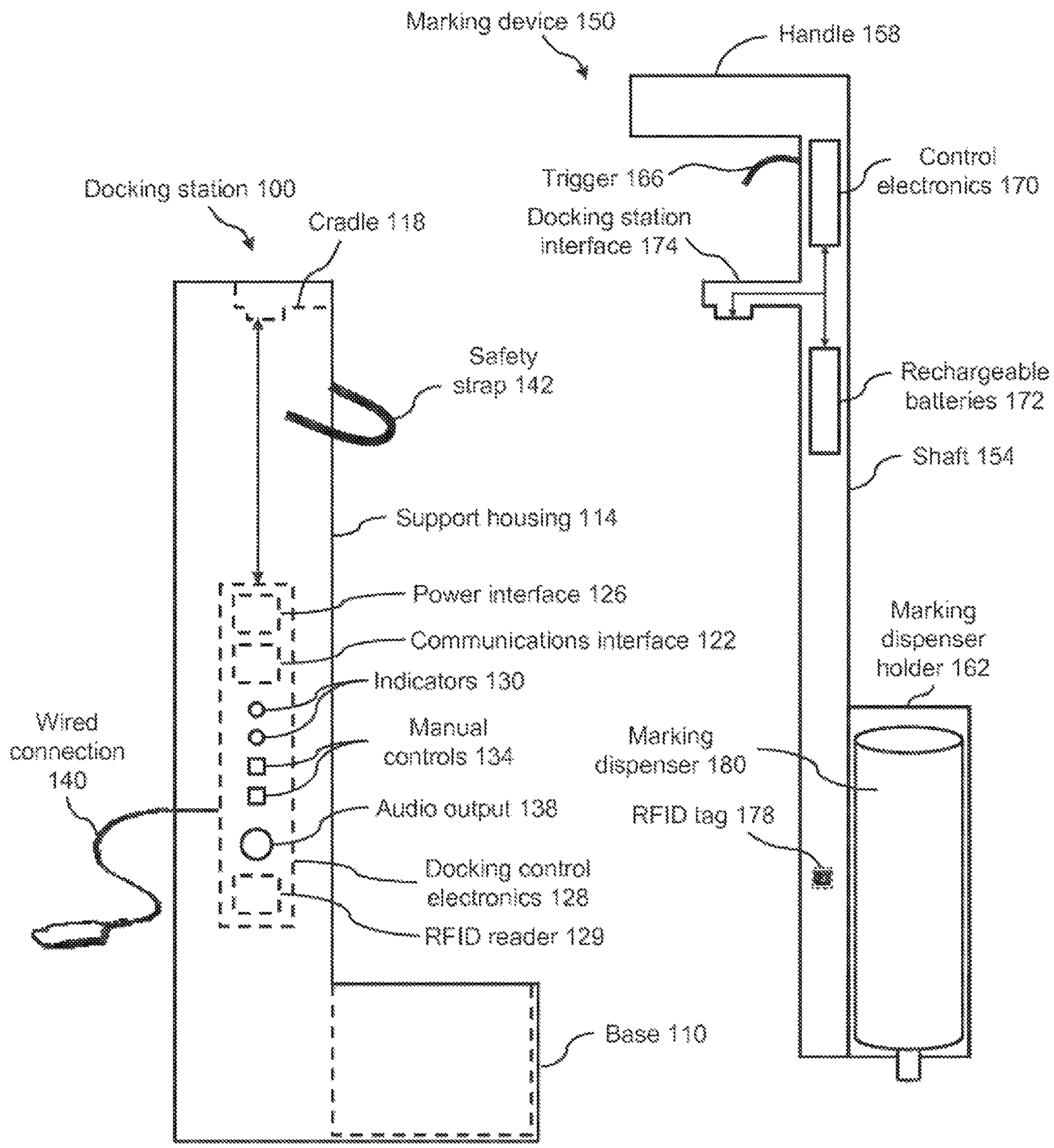
Marking device 150
Handle 158
Control electronics 170
Trigger 166
Docking station 100
Cradle 118
Docking station interface 174
Safety strap 142
Rechargeable batteries 172
Shaft 154
Support housing 114
Power interface 126
Communications interface 122
Marking dispenser holder 162
Indicators 130
Wired connection 140
Manual controls 134
Marking dispenser 180
Audio output 138
RFID tag 178
Docking control electronics 128
RFID reader 129
Base 110

FIG. 1

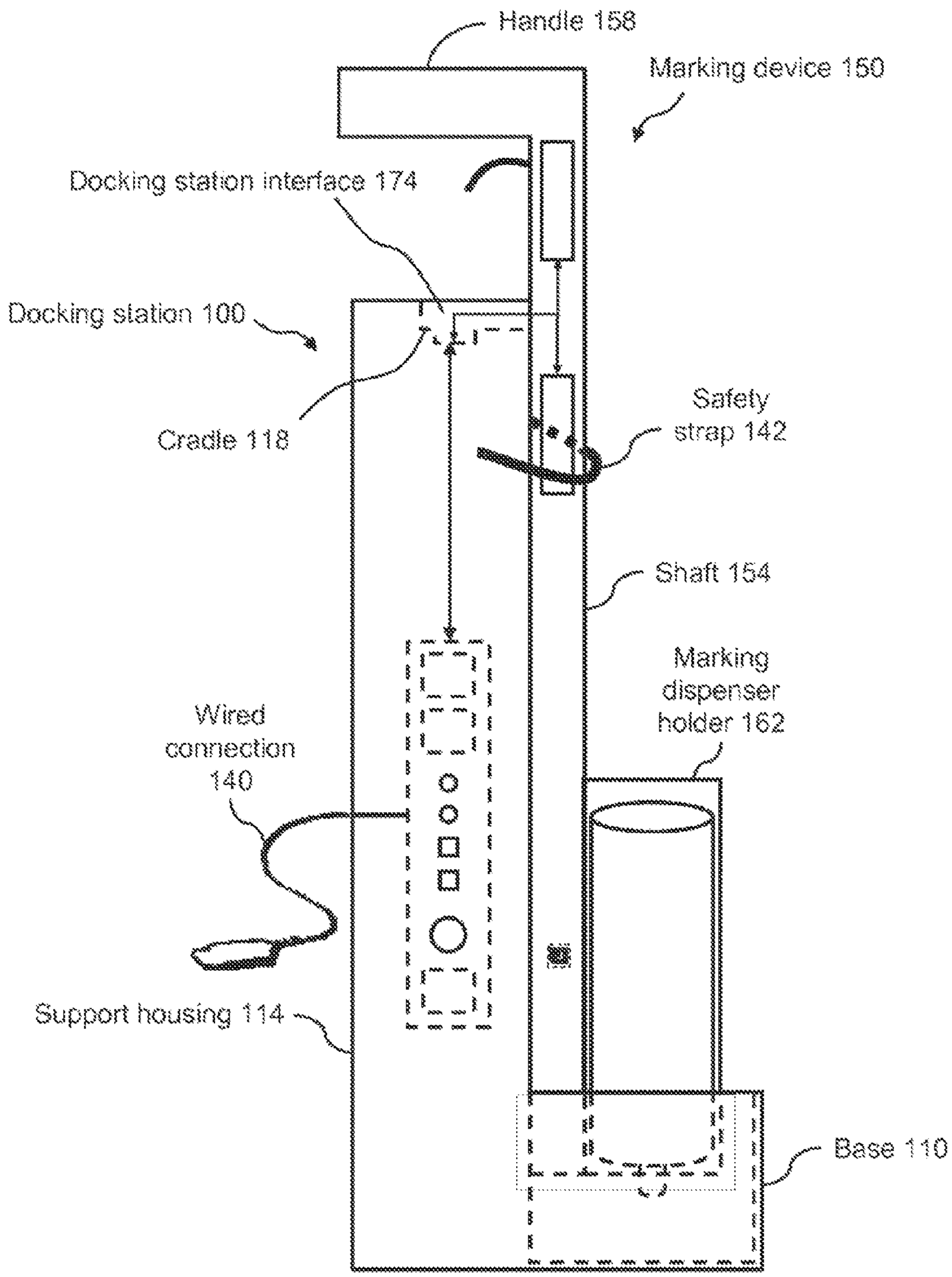
Handle 158
Marking device 150
Docking station interface 174
Docking station 100
Cradle 118
Safety strap 142
Shaft 154
Marking dispenser holder 162
Wired connection 140
Support housing 114
Base 110

FIG. 2

FIG. 3A

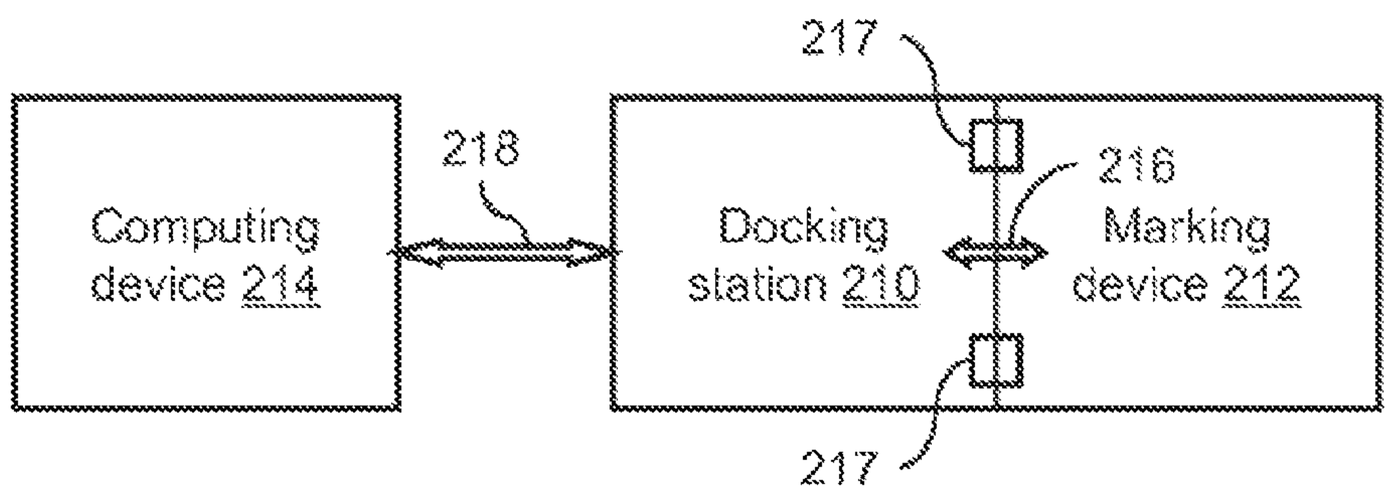

FIG. 3B

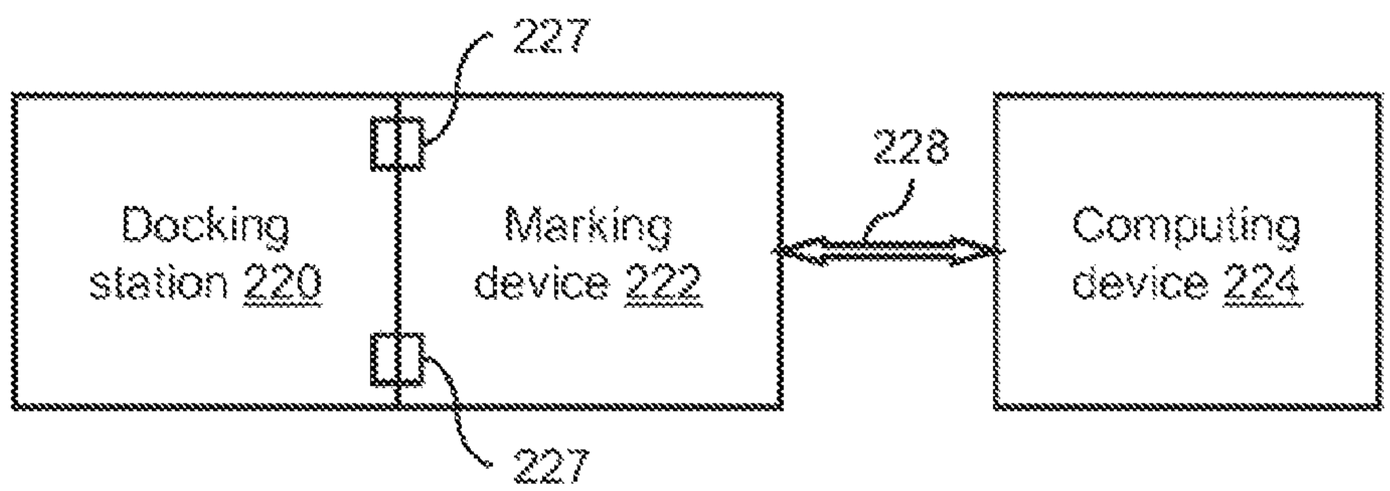

FIG. 3C

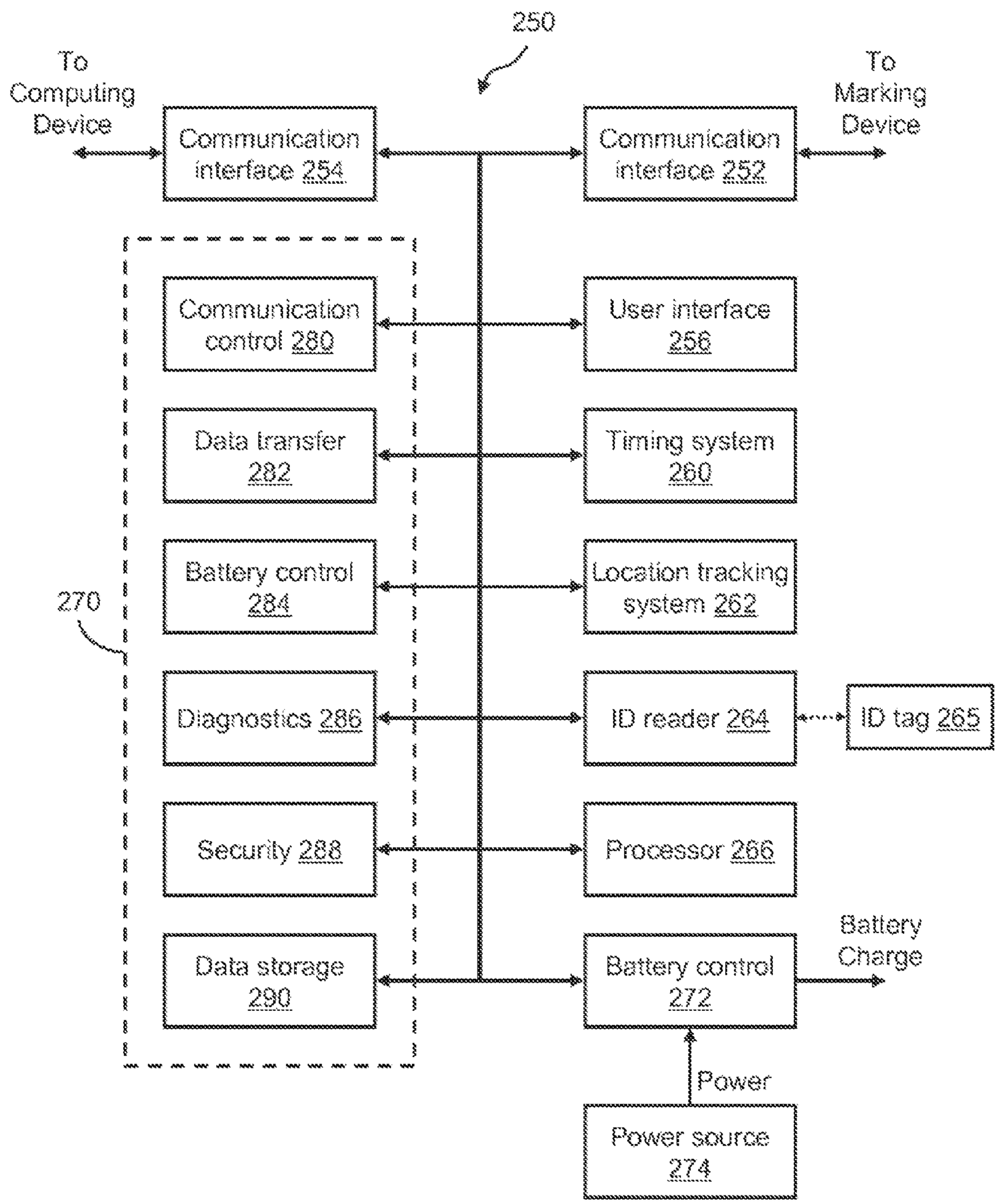
250
To Computing Device
Communication interface 254
Communication interface 252
To Marking Device
270
Communication control 280
User interface 256
Data transfer 282
Timing system 260
Battery control 284
Location tracking system 262
Diagnostics 286
ID reader 264
ID tag 265
Security 288
Processor 266
Data storage 290
Battery control 272
Battery Charge
Power
Power source 274

FIG. 4

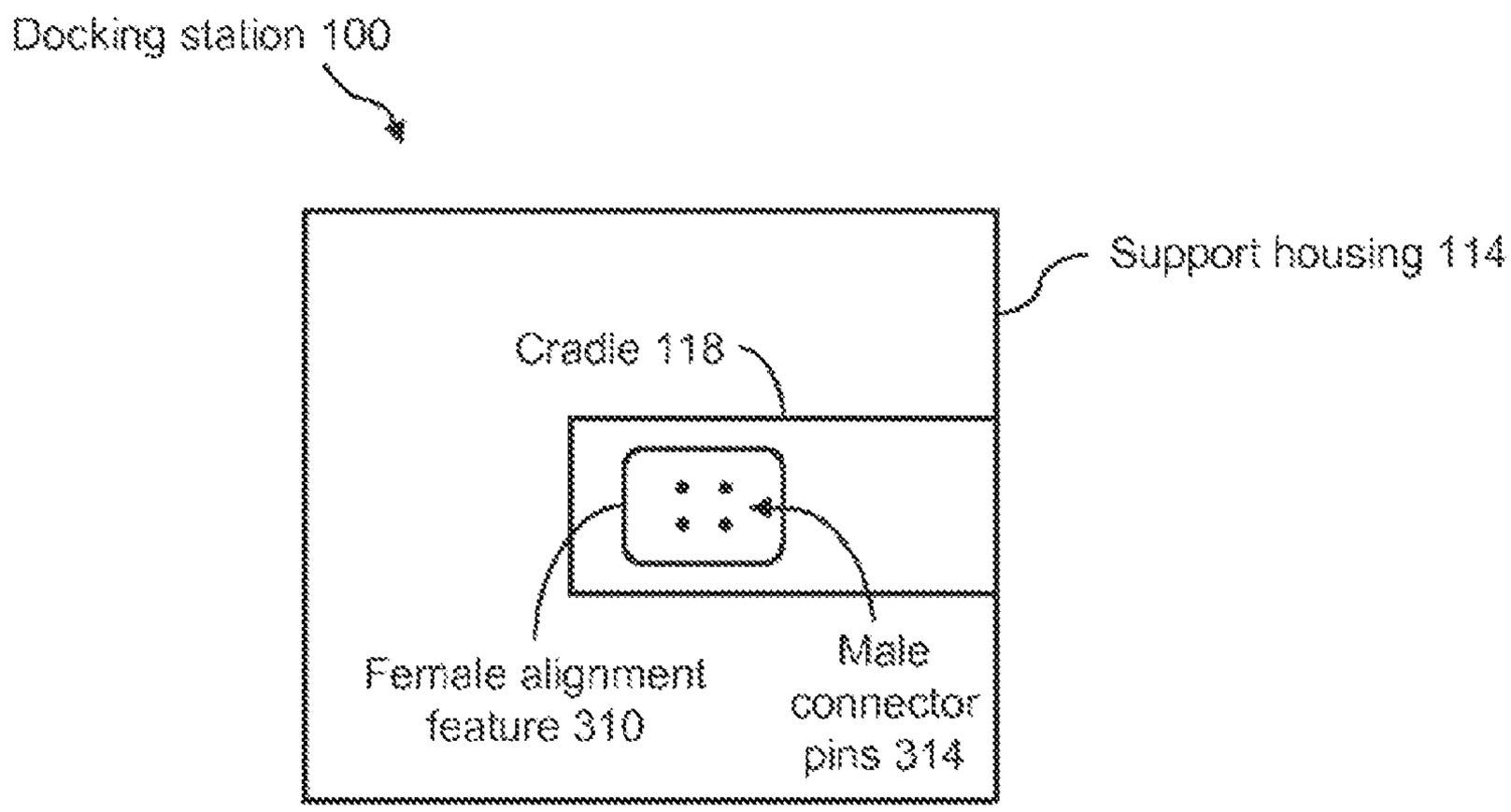
Docking station 100
Support housing 114
Cradle 118
Female alignment feature 310
Male connector pins 314

FIG. 5A

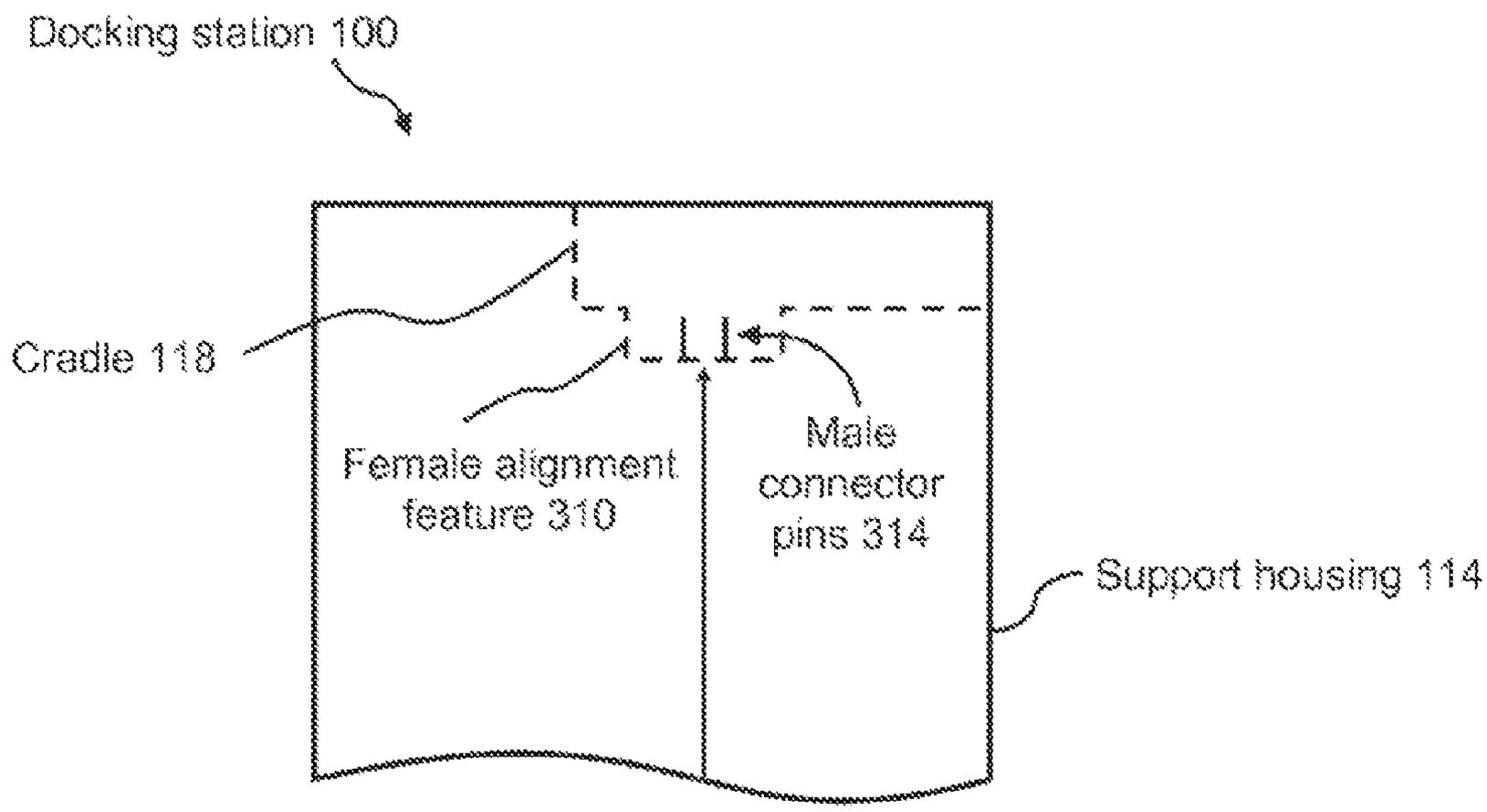
Docking station 100
Cradle 118
Female alignment feature 310
Male connector pins 314
Support housing 114

FIG. 5B

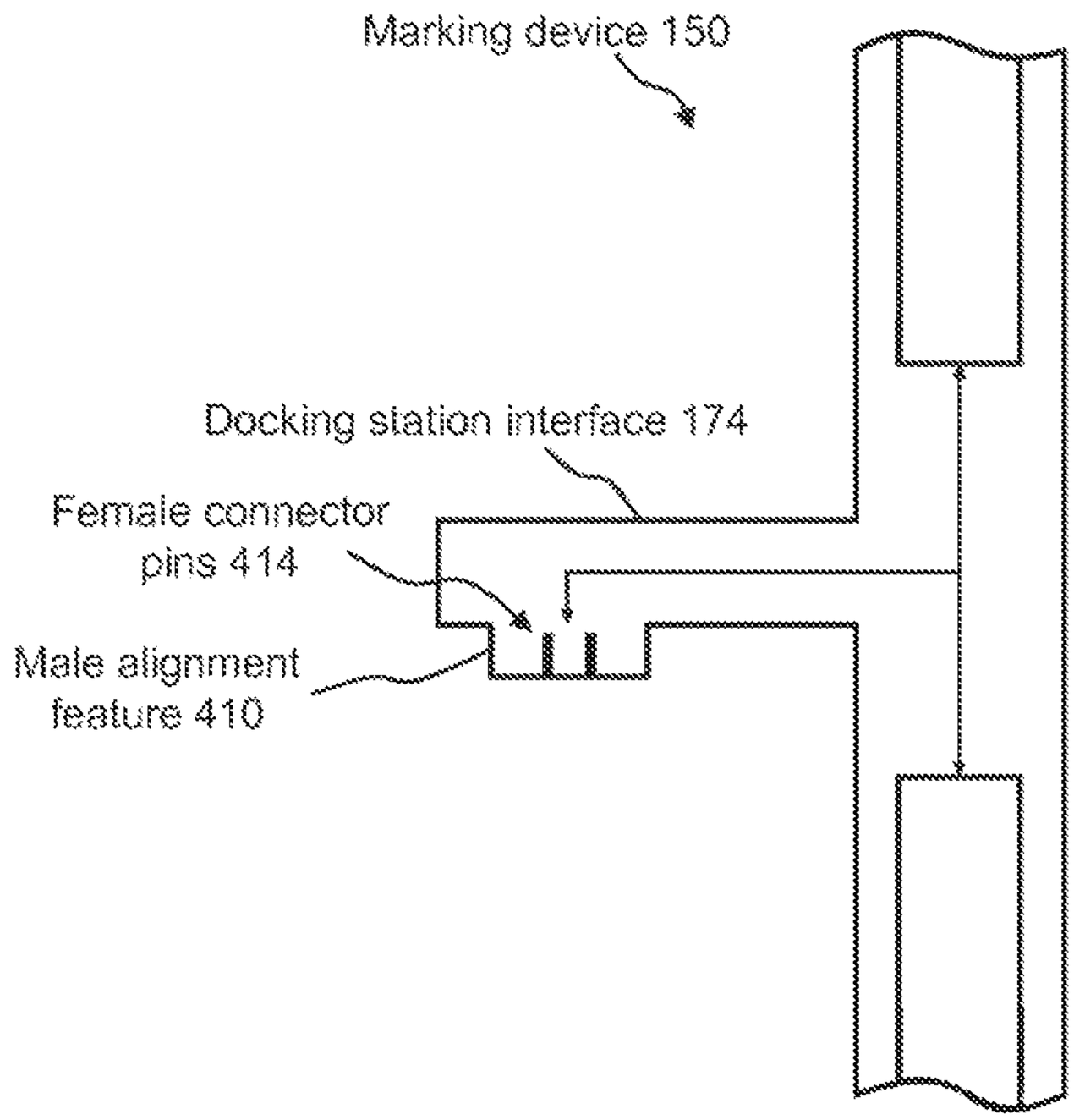
Marking device 150
Docking station interface 174
Female connector pins 414
Male alignment feature 410

FIG. 6A

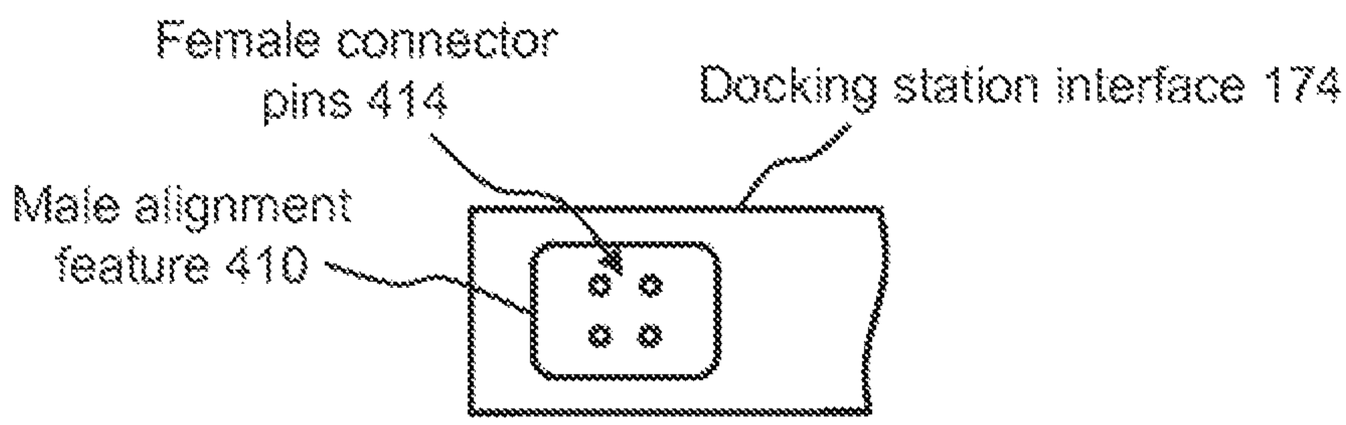
Female connector pins 414
Docking station interface 174
Male alignment feature 410

FIG. 6B

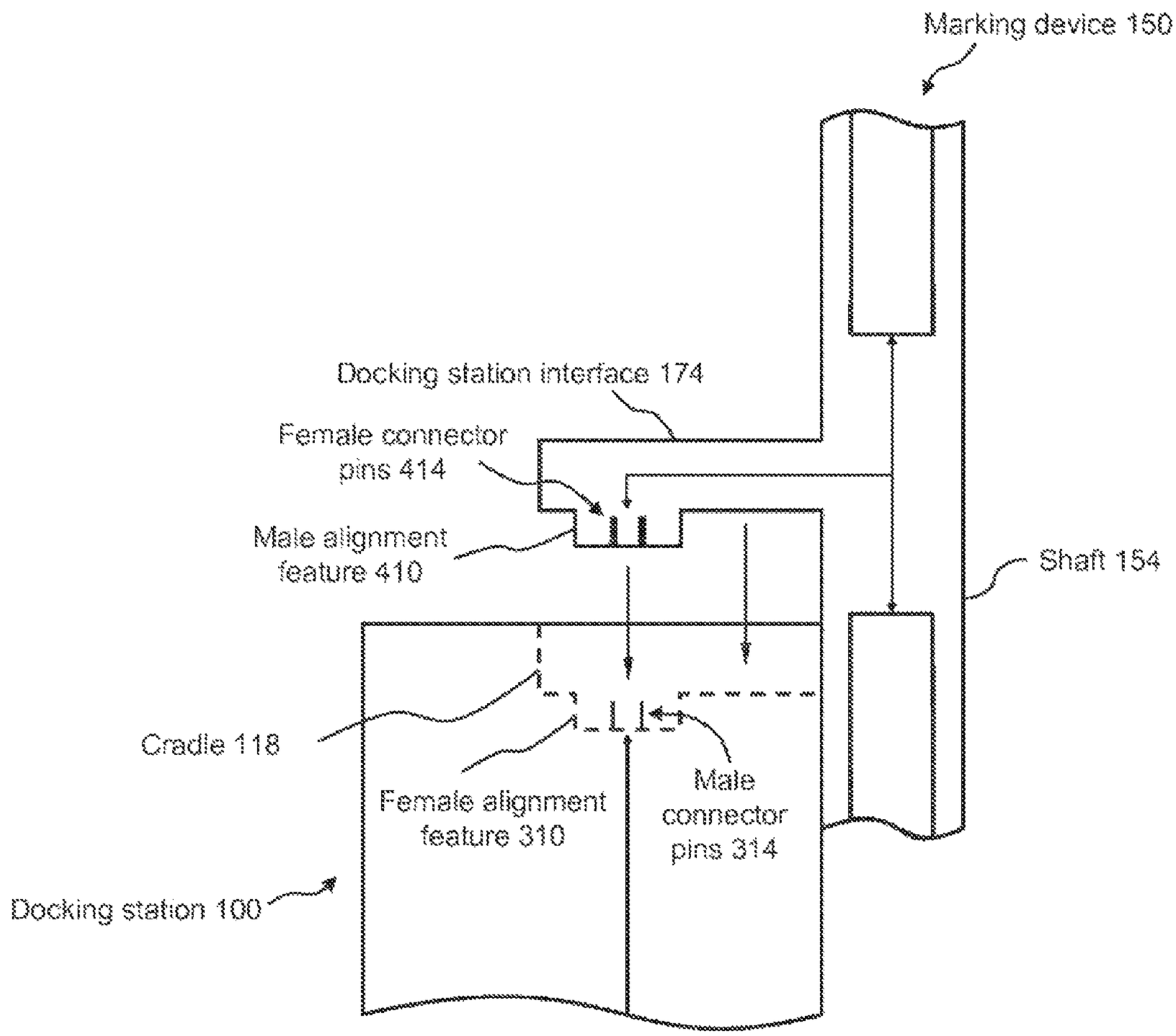
Marking device 150
Docking station interface 174
Female connector pins 414
Male alignment feature 410
Shaft 154
Cradle 118
Female alignment feature 310
Male connector pins 314
Docking station 100

FIG. 7

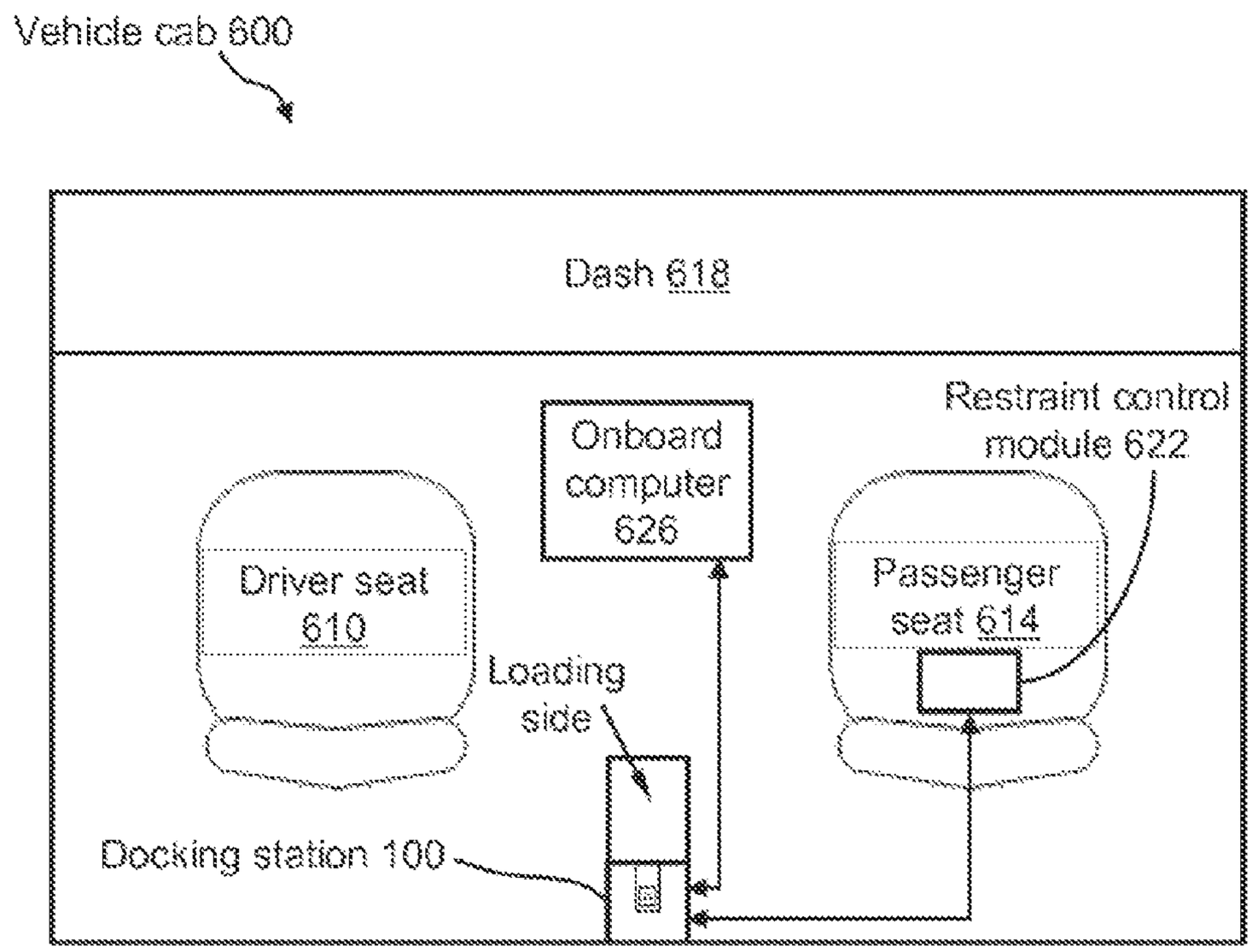
Vehicle cab 600
Dash 618
Onboard computer 626
Restraint control module 622
Driver seat 610
Passenger seat 614
Loading side
Docking station 100

FIG. 8A

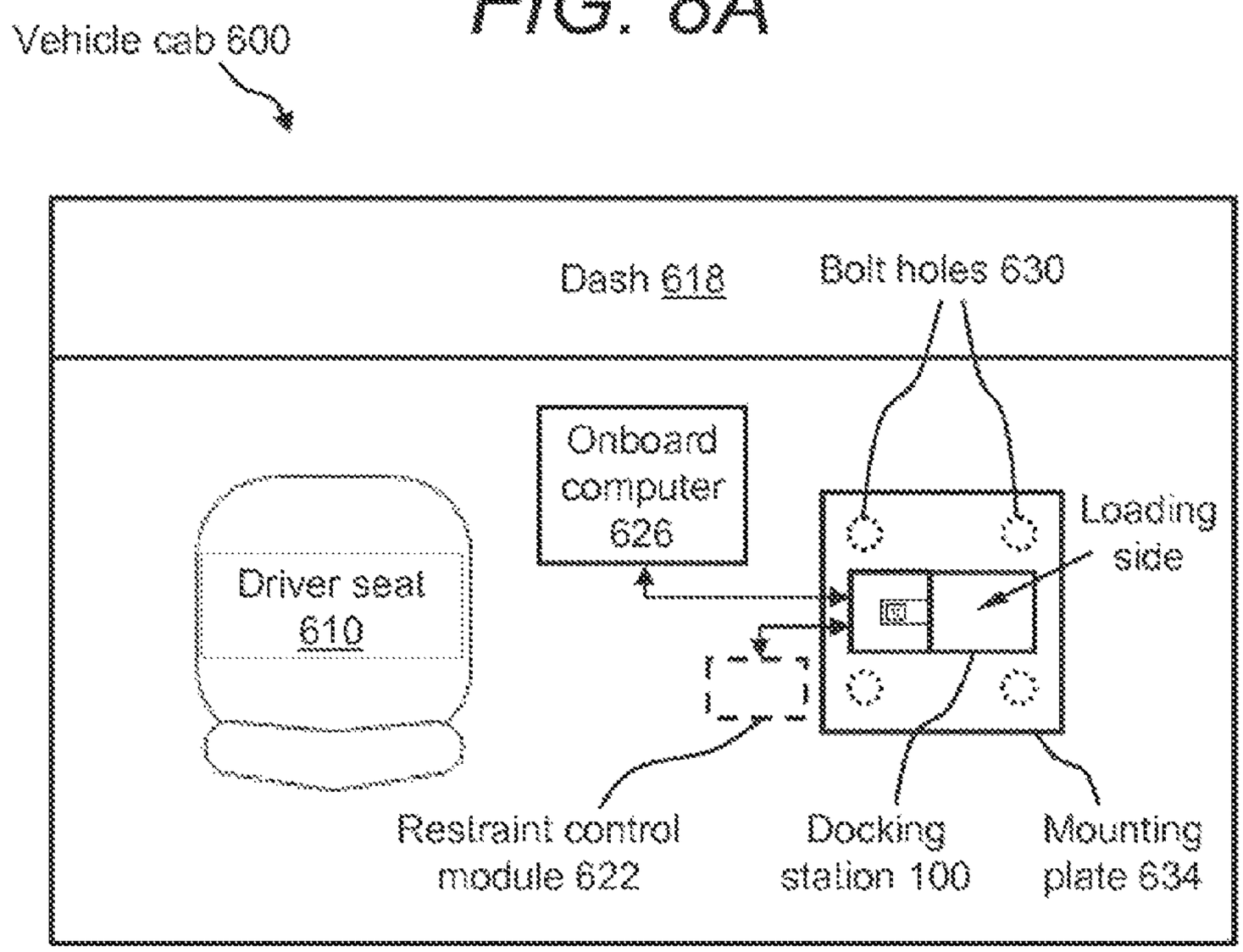
Vehicle cab 600
Dash 618
Bolt holes 630
Onboard computer 626
Driver seat 610
Loading side
Restraint control module 622
Docking station 100
Mounting plate 634

FIG. 8B

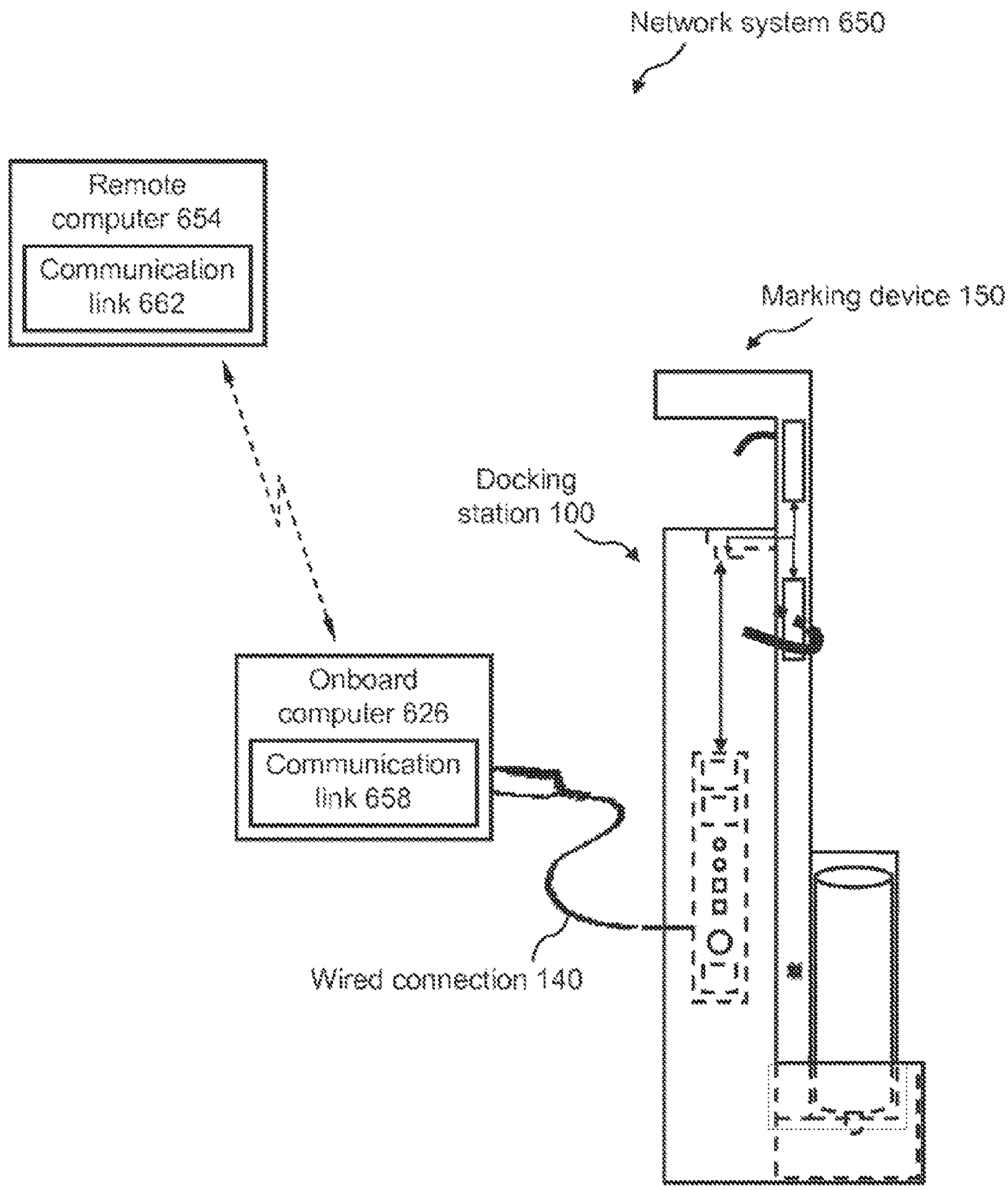
Network system 650
Remote computer 654
Communication link 662
Marking device 150
Docking station 100
Onboard computer 626
Communication link 658
Wired connection 140

FIG. 8C

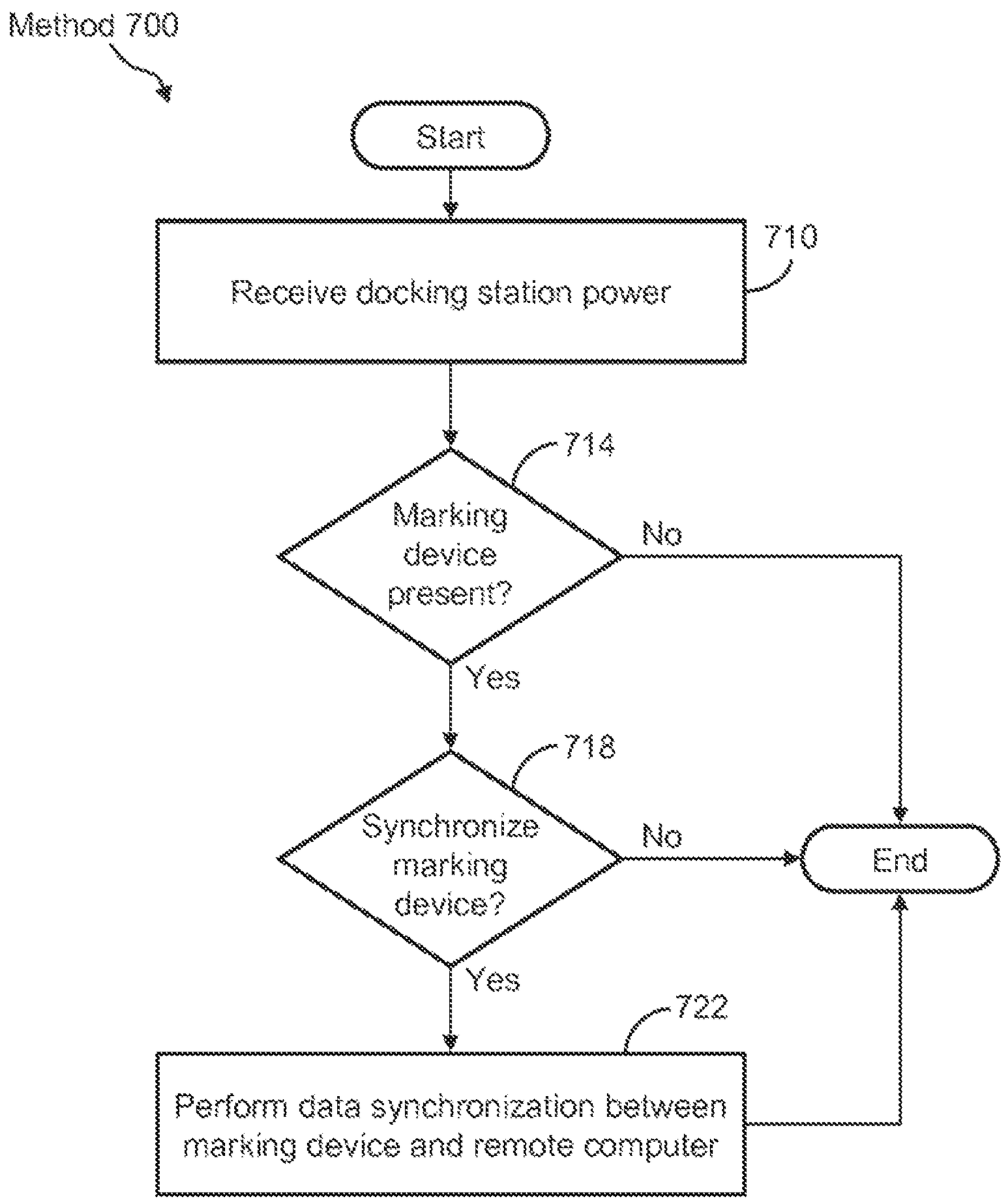
Method 700
Start
Receive docking station power
710
Marking device present?
714
No
Yes
Synchronize marking device?
718
No
End
Yes
Perform data synchronization between marking device and remote computer
722

FIG. 9

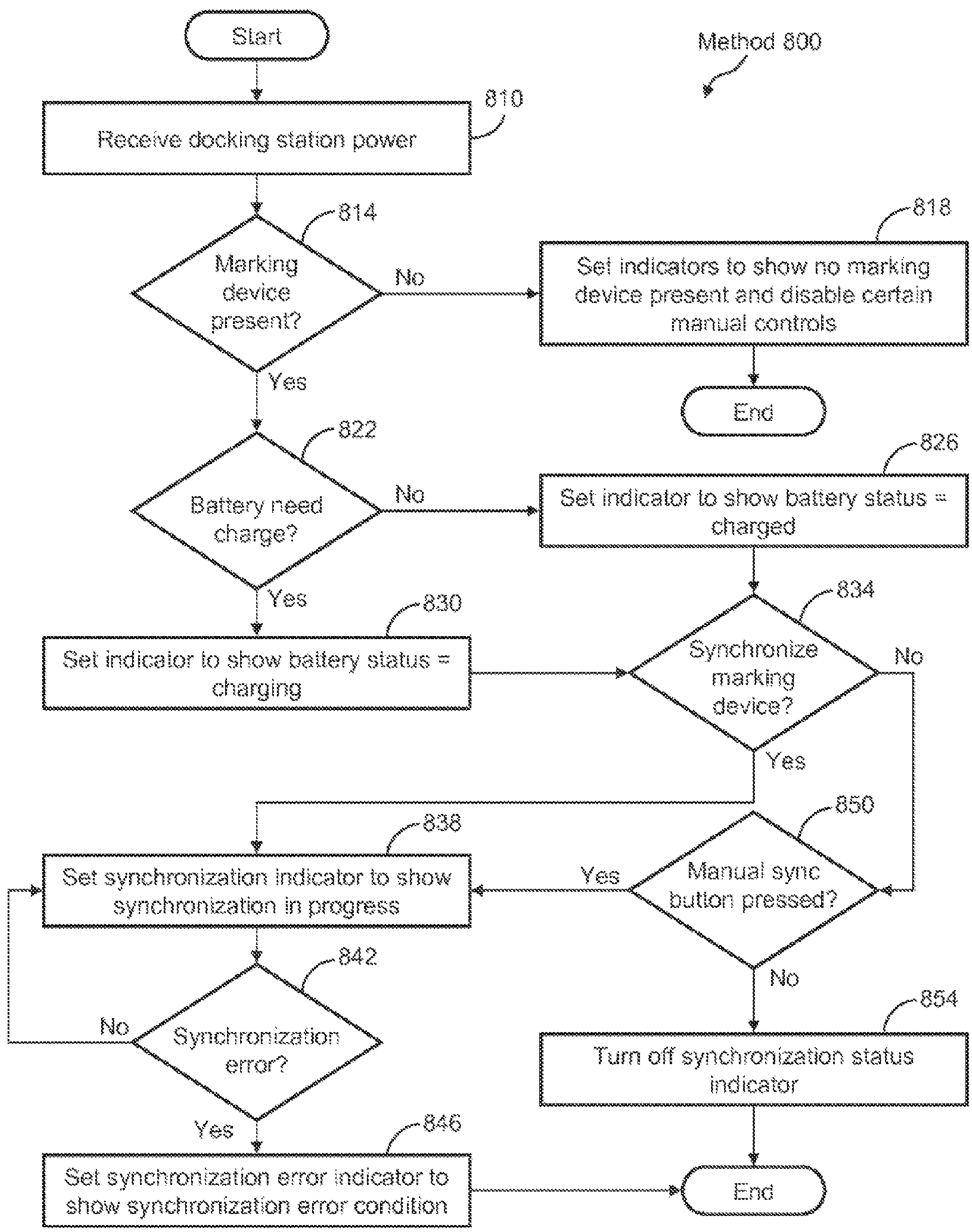
Start
Method 800
Receive docking station power
810
Marking device present?
814
No
Set indicators to show no marking device present and disable certain manual controls
818
End
Yes
Battery need charge?
822
No
Set indicator to show battery status = charged
826
Yes
Set indicator to show battery status = charging
830
Synchronize marking device?
834
No
Yes
Set synchronization indicator to show synchronization in progress
838
Yes
Manual sync bution pressed?
850
No
Synchronization error?
842
No
Turn off synchronization status indicator
854
Yes
Set synchronization error indicator to show synchronization error condition
846
End

FIG. 10

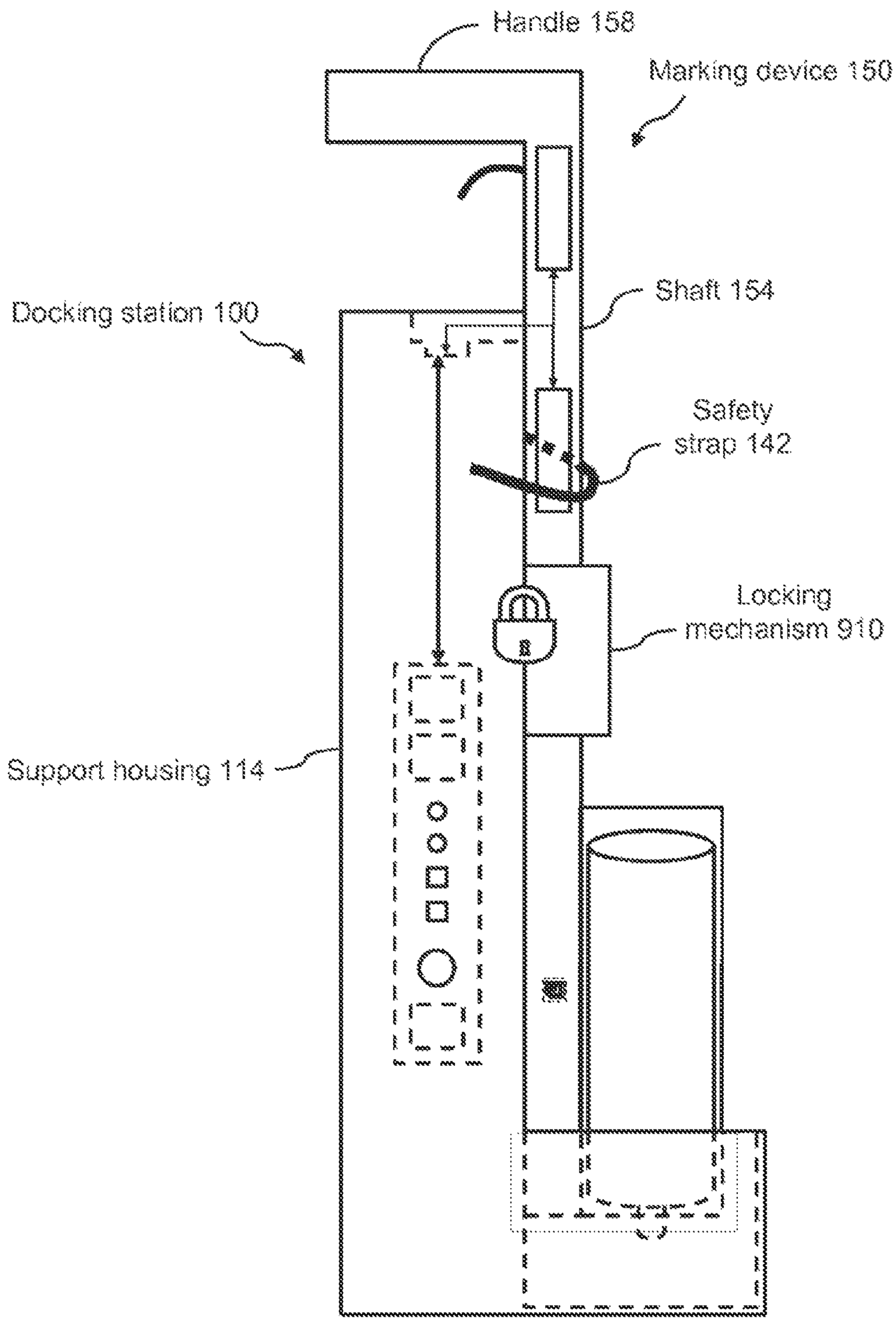
Handle 158
Marking device 150
Shaft 154
Docking station 100
Safety
strap 142
Locking
mechanism 910
Support housing 114

FIG. 11

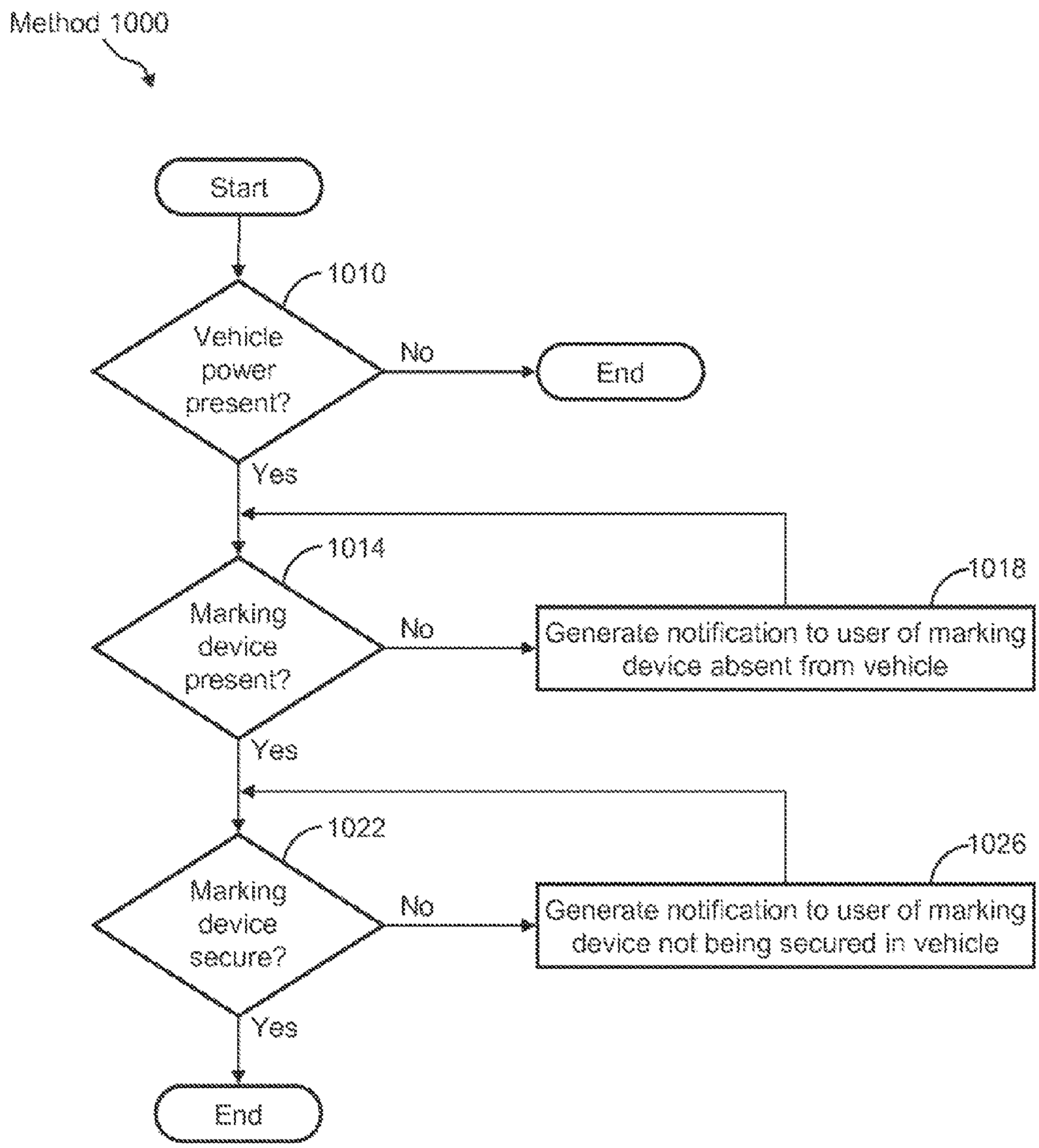
Method 1000
Start
1010
Vehicle power present?
No
End
Yes
1014
Marking device present?
No
1018
Generate notification to user of marking device absent from vehicle
Yes
1022
Marking device secure?
No
1026
Generate notification to user of marking device not being secured in vehicle
Yes
End

FIG. 12

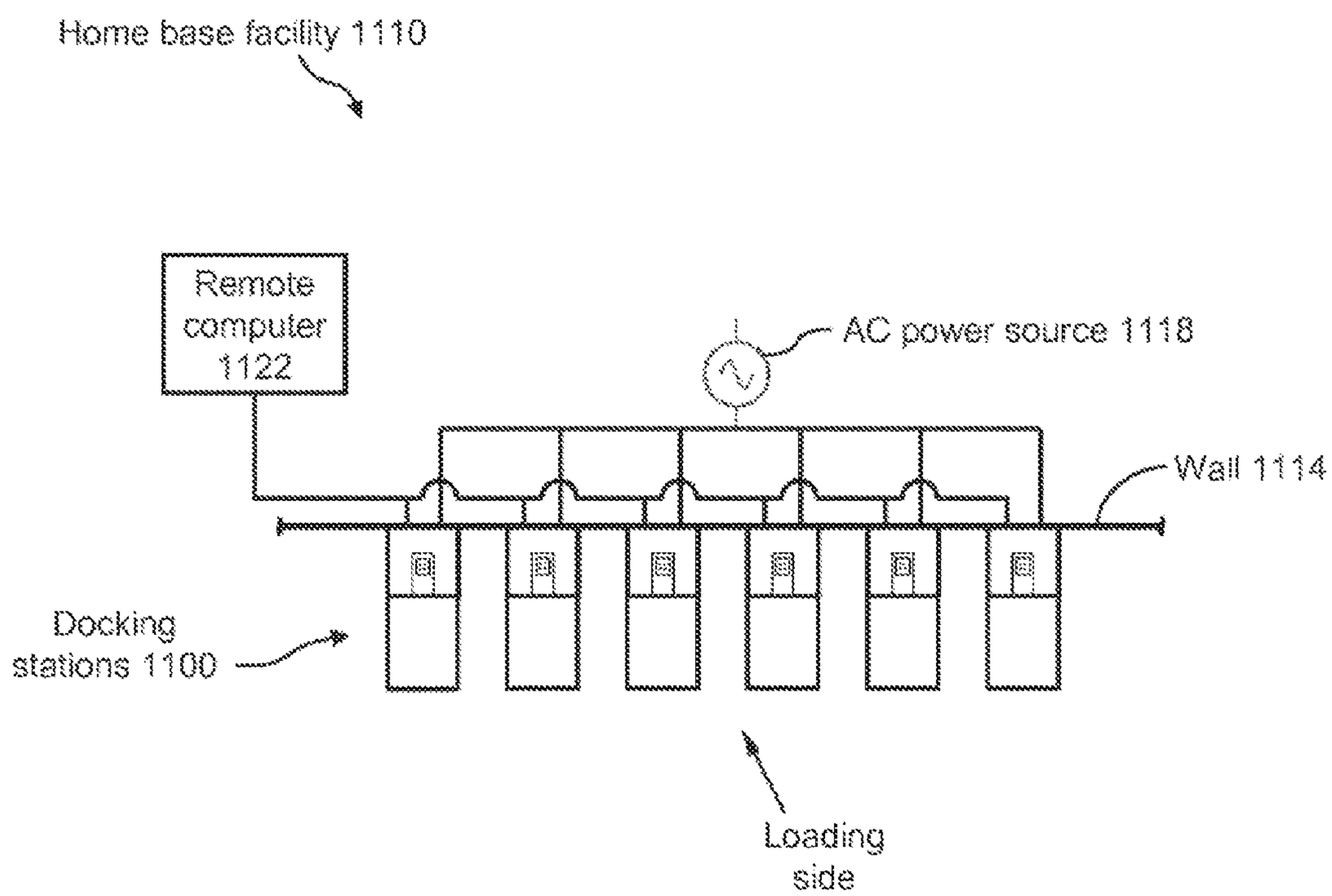
Home base facility 1110
Remote computer 1122
AC power source 1118
Wall 1114
Docking stations 1100
Loading side

FIG. 13

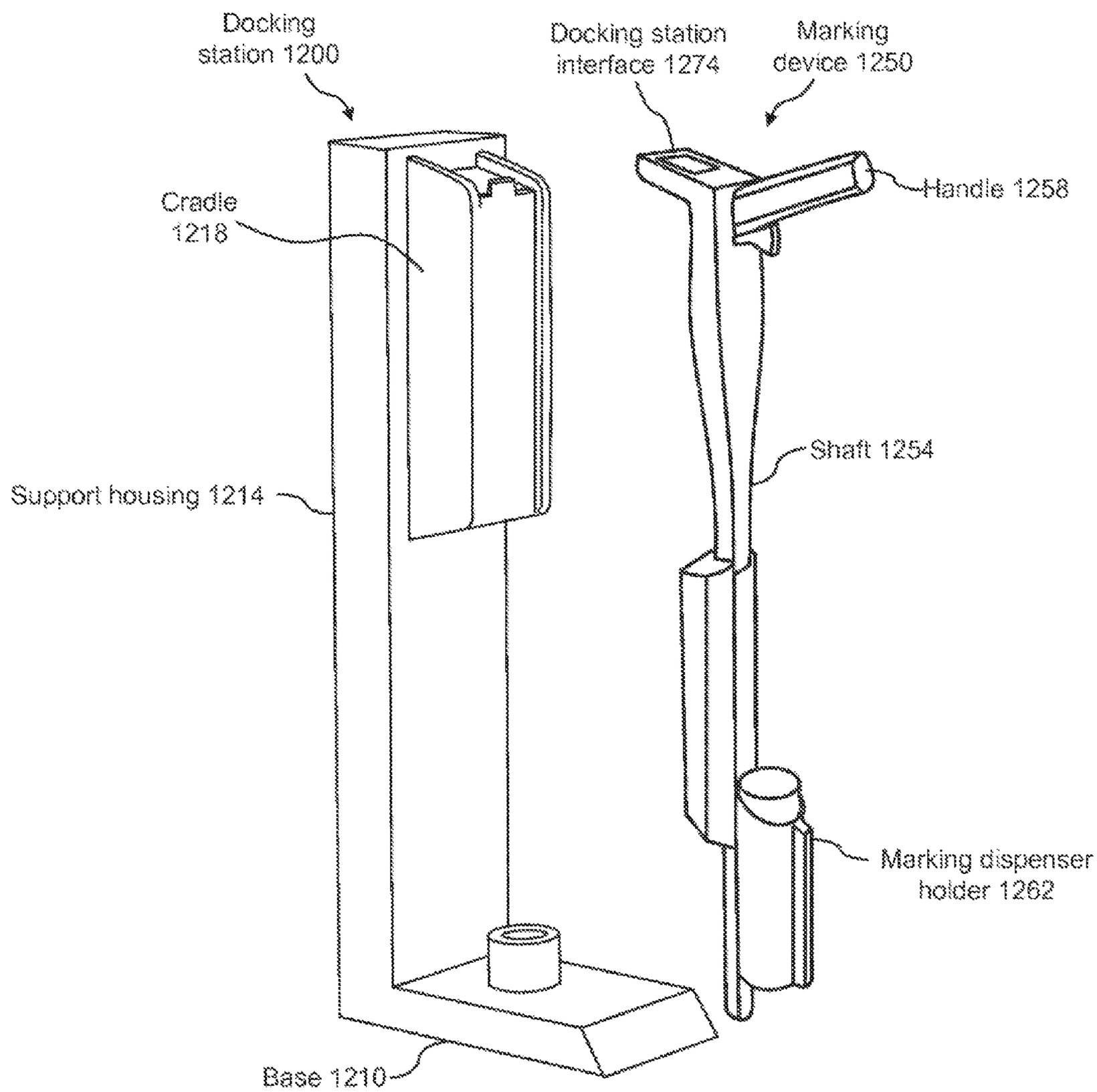
Docking station 1200
Docking station interface 1274
Marking device 1250
Handle 1258
Cradle 1218
Shaft 1254
Support housing 1214
Marking dispenser holder 1262
Base 1210

FIG. 14

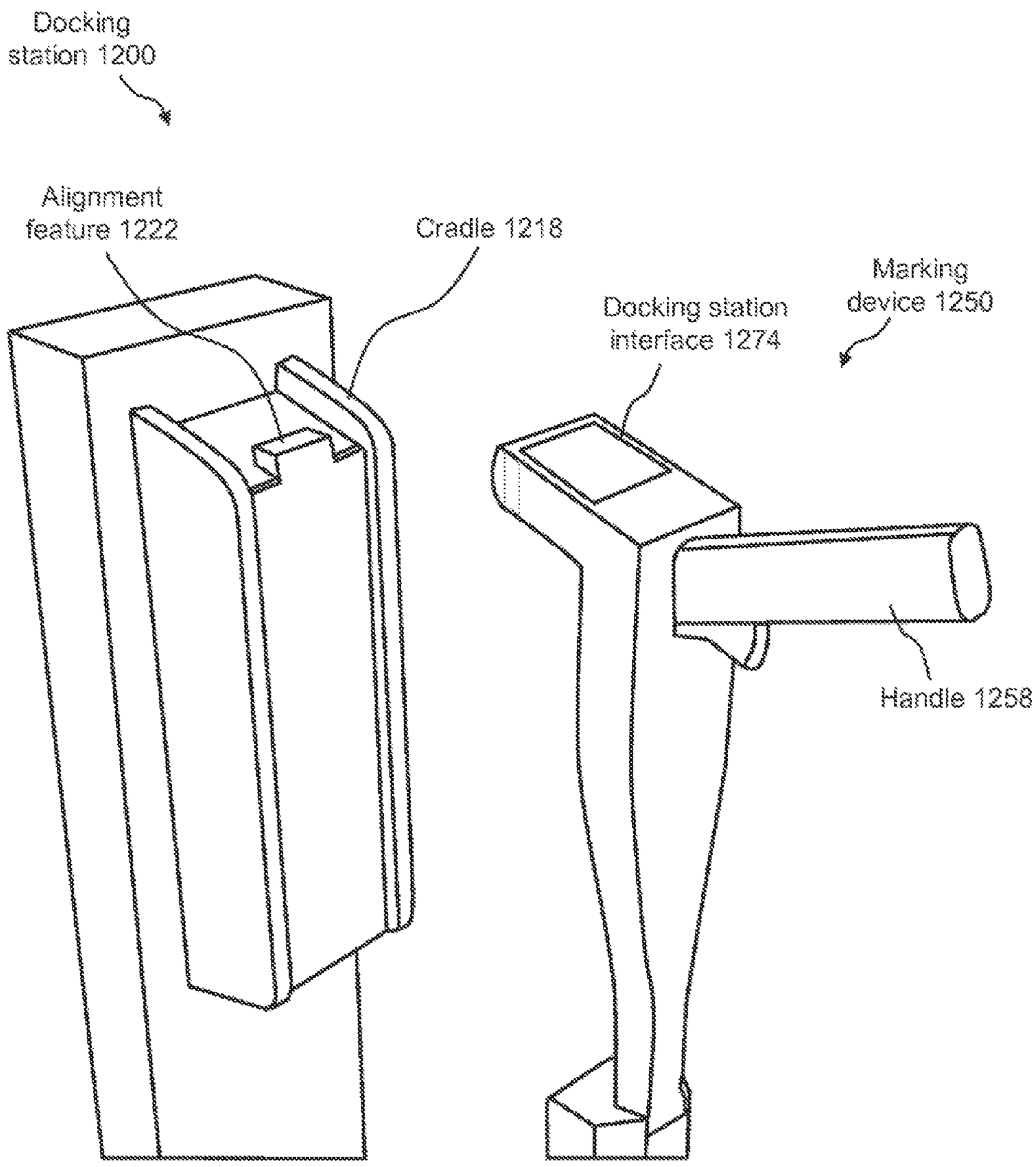
Docking station 1200
Alignment feature 1222
Cradle 1218
Docking station interface 1274
Marking device 1250
Handle 1258

FIG. 15

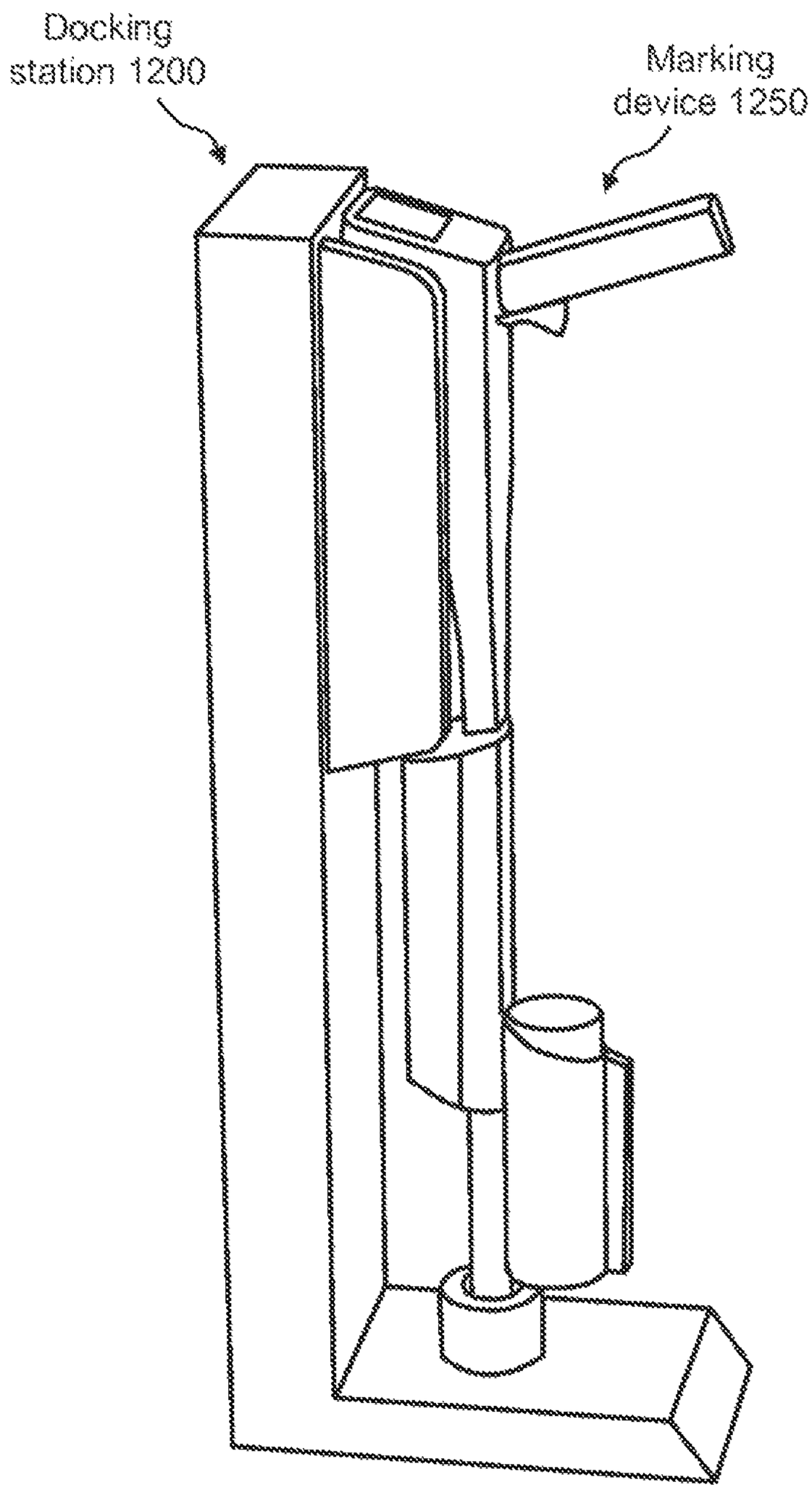

FIG. 16

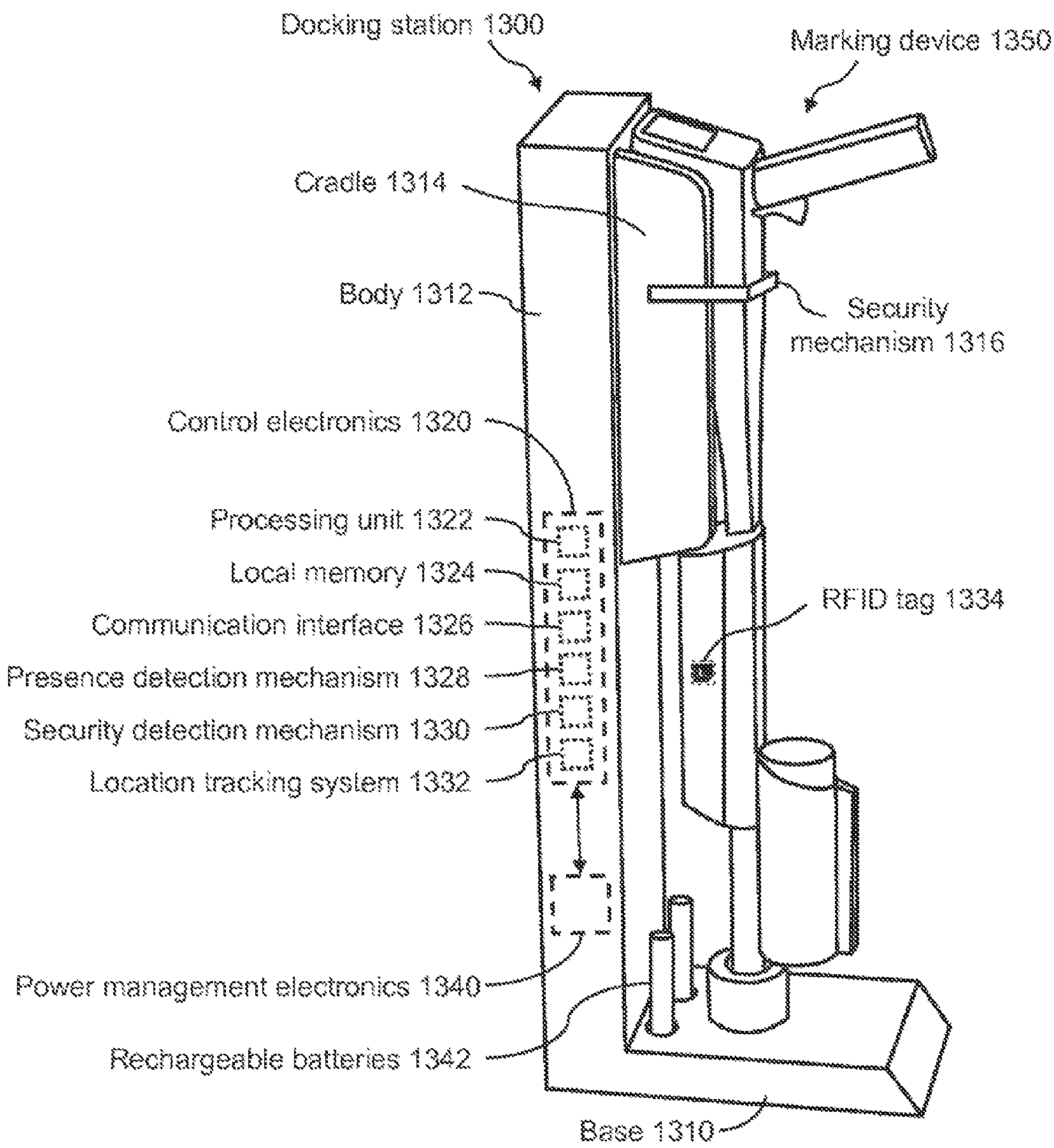
Docking station 1300
Marking device 1350
Cradle 1314
Body 1312
Security mechanism 1316
Control electronics 1320
Processing unit 1322
Local memory 1324
Communication interface 1326
Presence detection mechanism 1328
Security detection mechanism 1330
Location tracking system 1332
RFID tag 1334
Power management electronics 1340
Rechargeable batteries 1342
Base 1310

FIG. 17

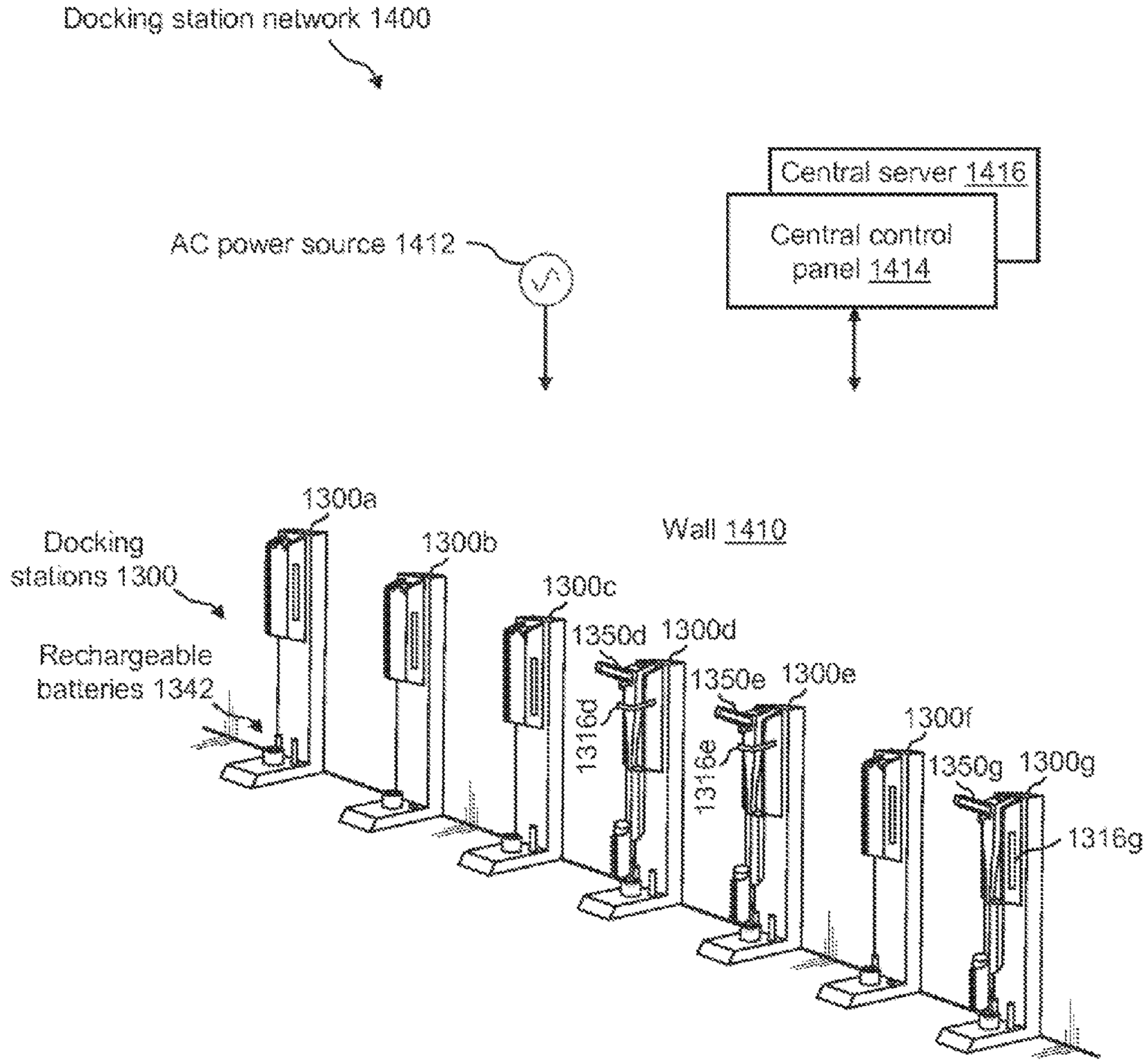
Docking station network 1400
Central server 1416
Central control panel 1414
AC power source 1412
1300a
1300b
Wall 1410
Docking stations 1300
1300c
1350d
1300d
Rechargeable batteries 1342
1350e
1300e
1316d
1316e
1300f
1350g
1300g
1316g

FIG. 18

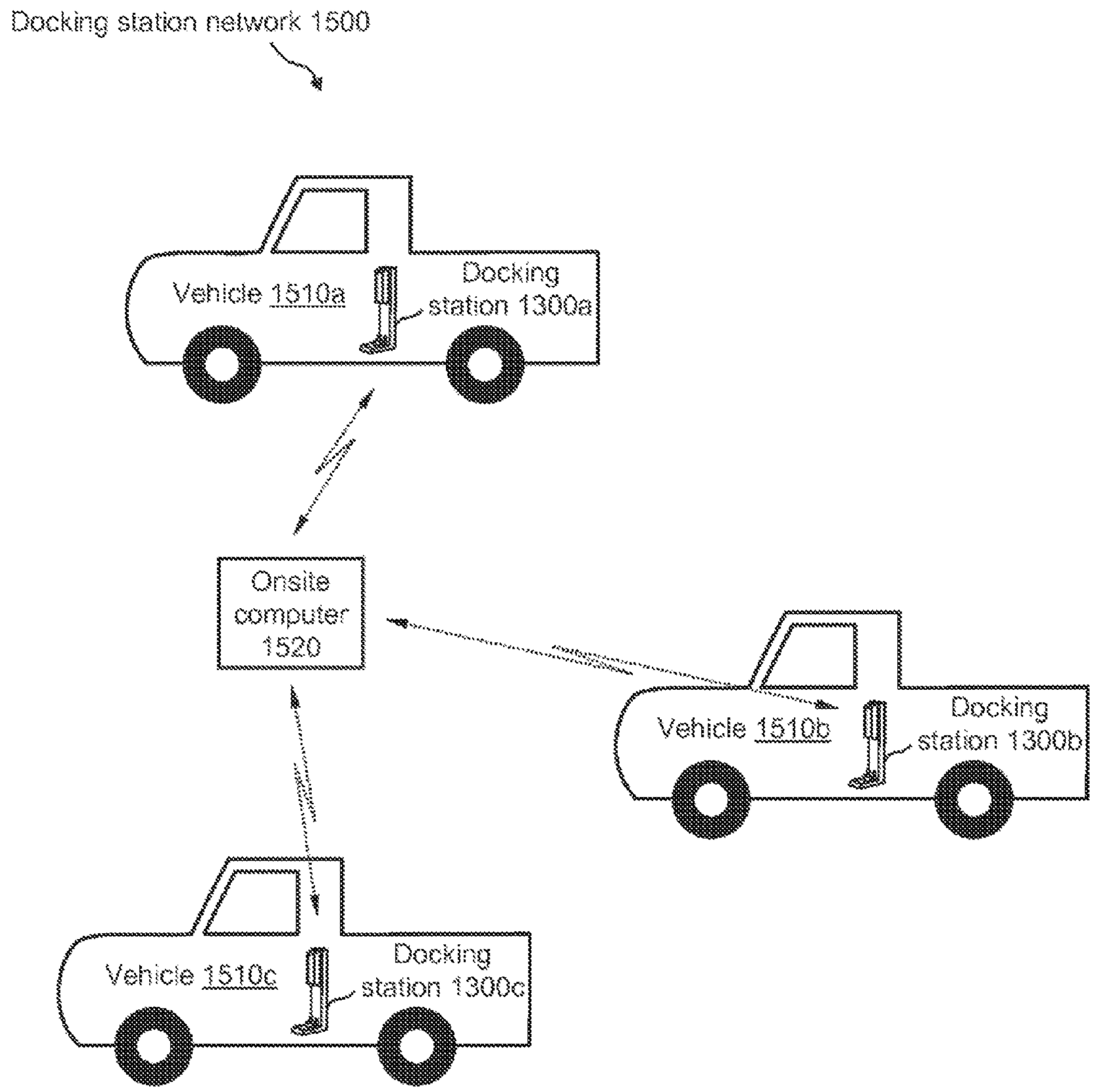
Docking station network 1500
Vehicle 1510a
Docking station 1300a
Onsite computer 1520
Vehicle 1510b
Docking station 1300b
Vehicle 1510c
Docking station 1300c

FIG. 19

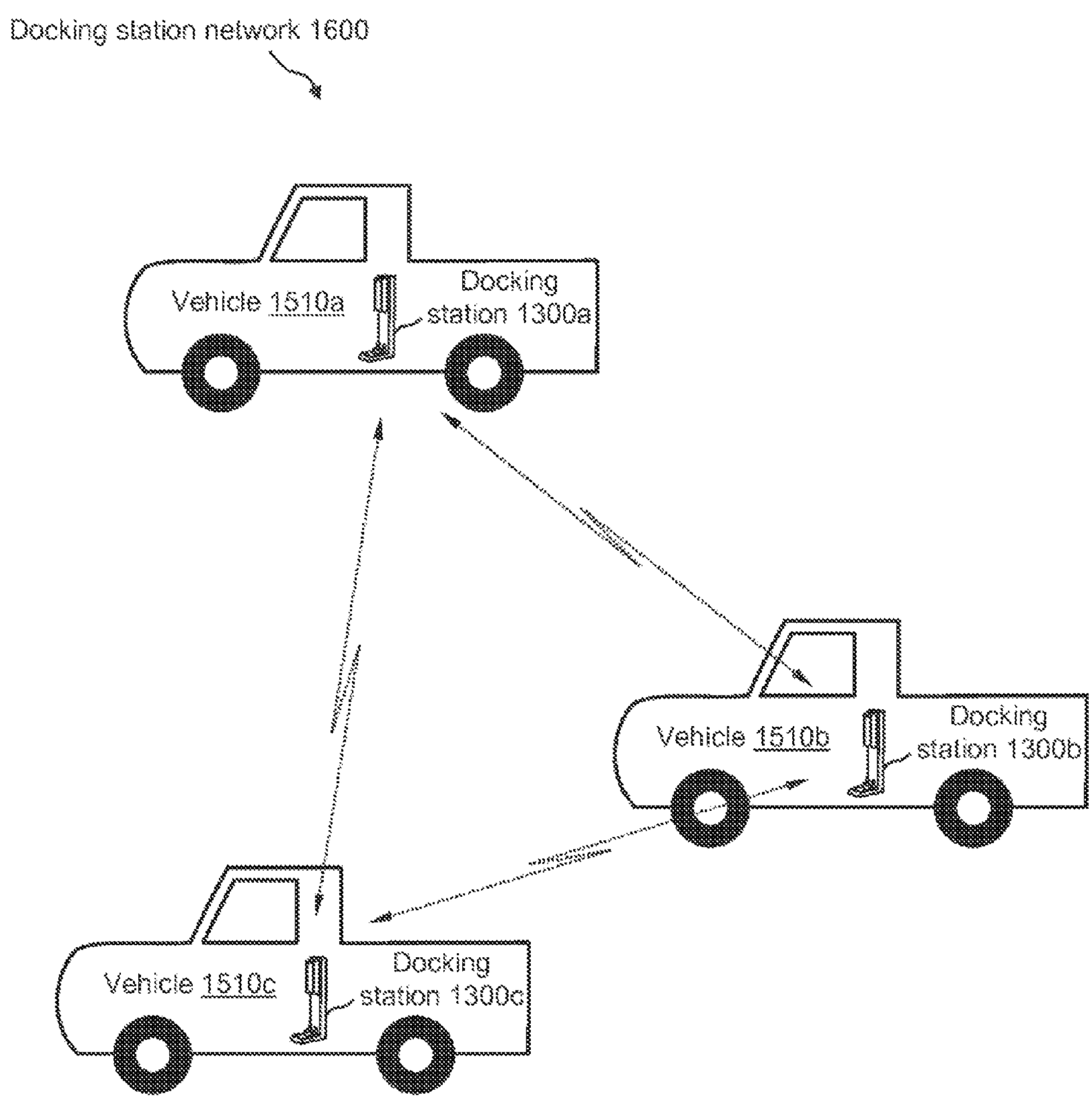
Docking station network 1600
Vehicle 1510a
Docking station 1300a
Vehicle 1510b
Docking station 1300b
Vehicle 1510c
Docking station 1300c

FIG. 20

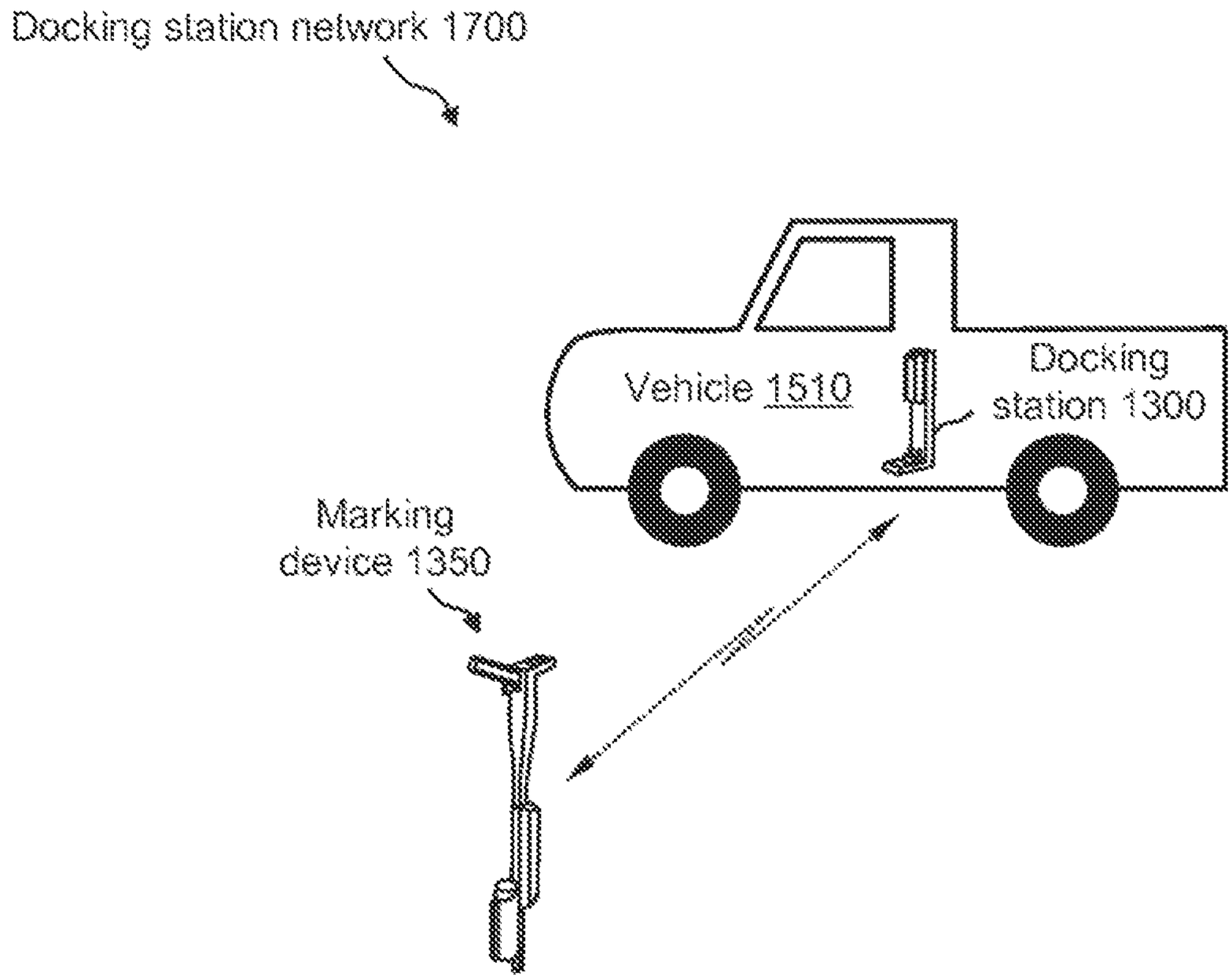
Docking station network 1700
Vehicle 1510
Docking station 1300
Marking device 1350

FIG. 21

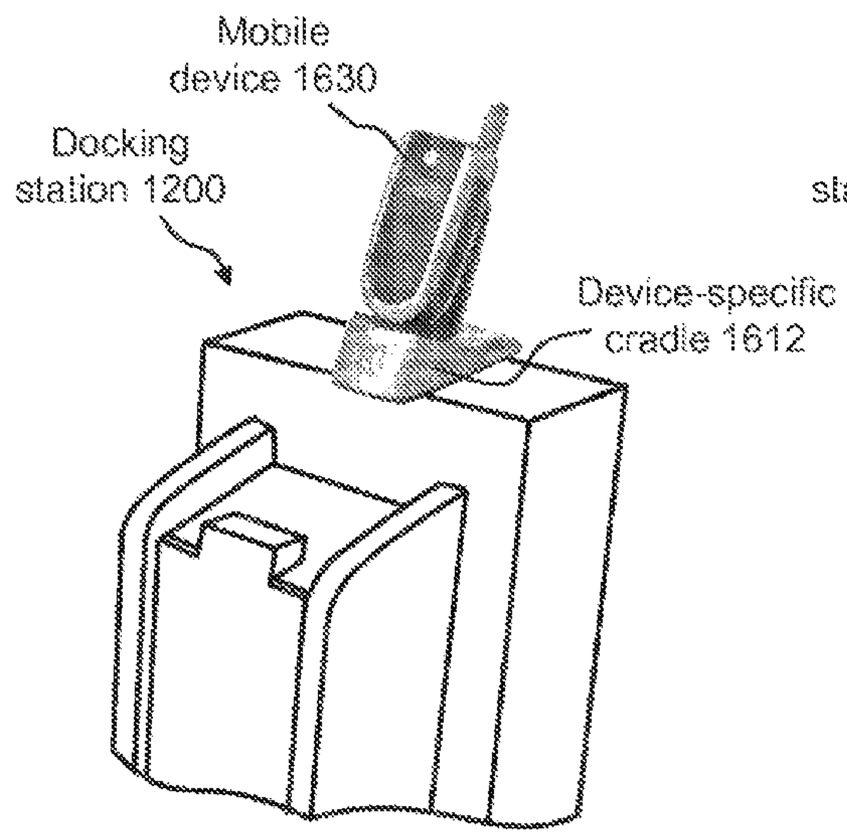

FIG. 22A

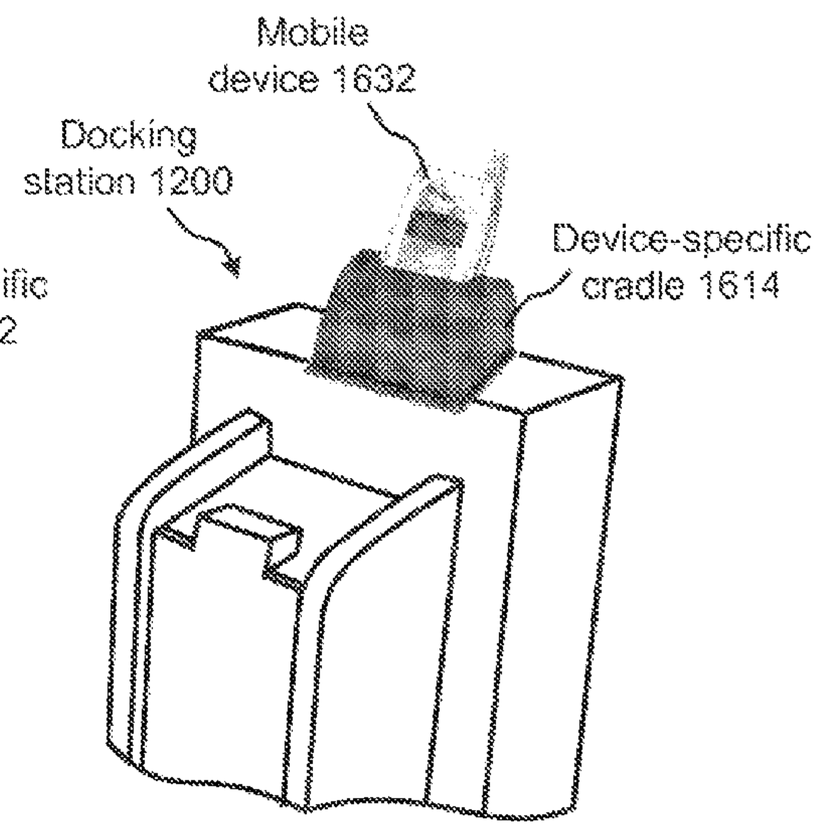

FIG. 22B

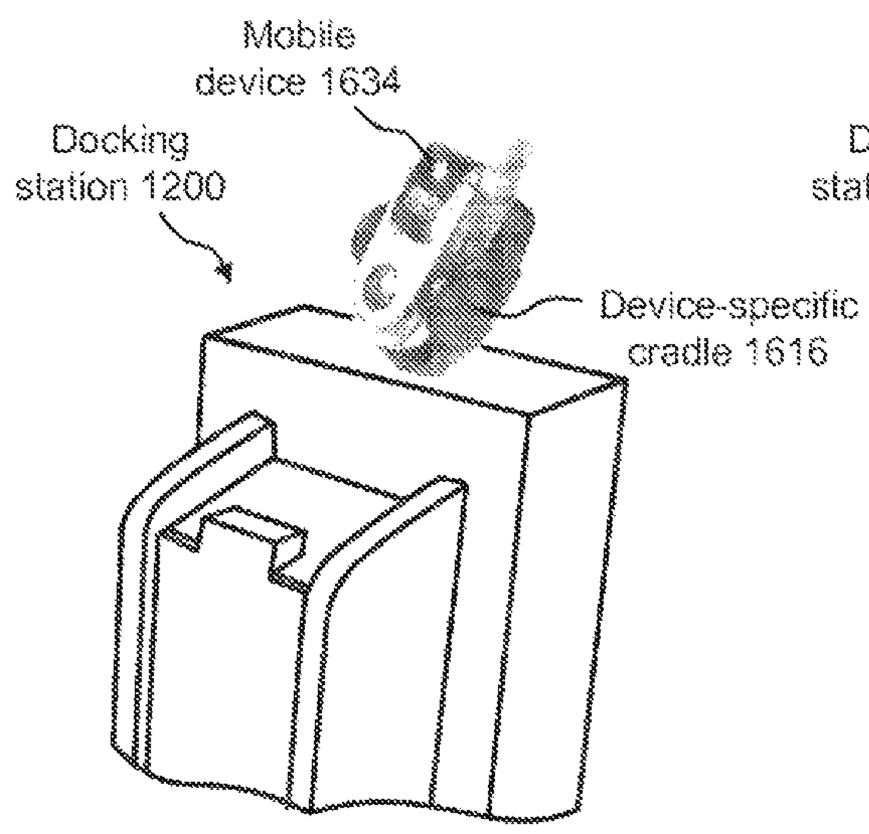

FIG. 22C

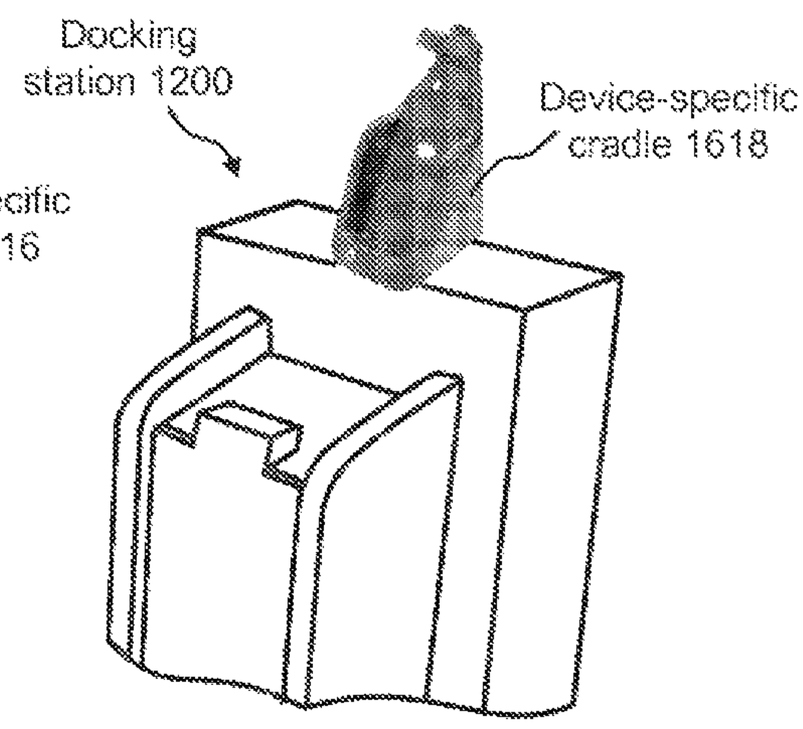

FIG. 22D

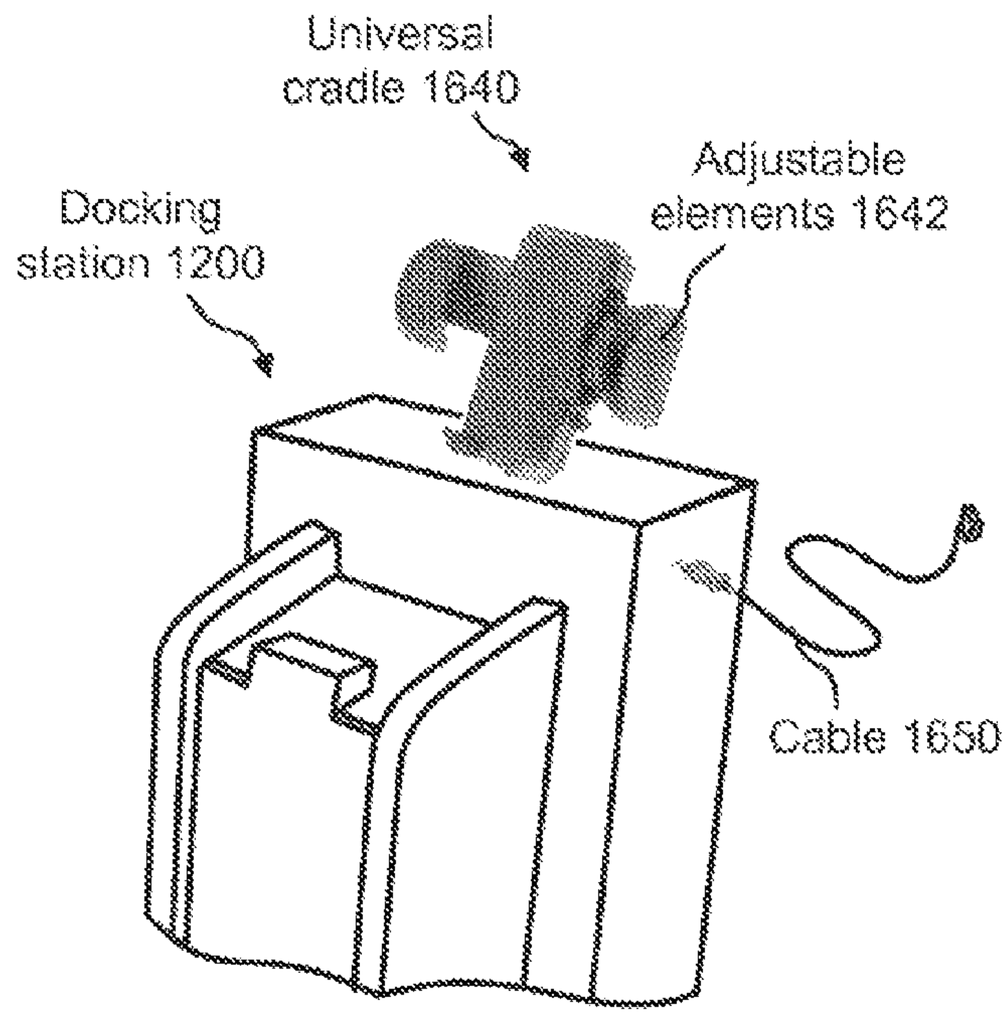

FIG. 23A

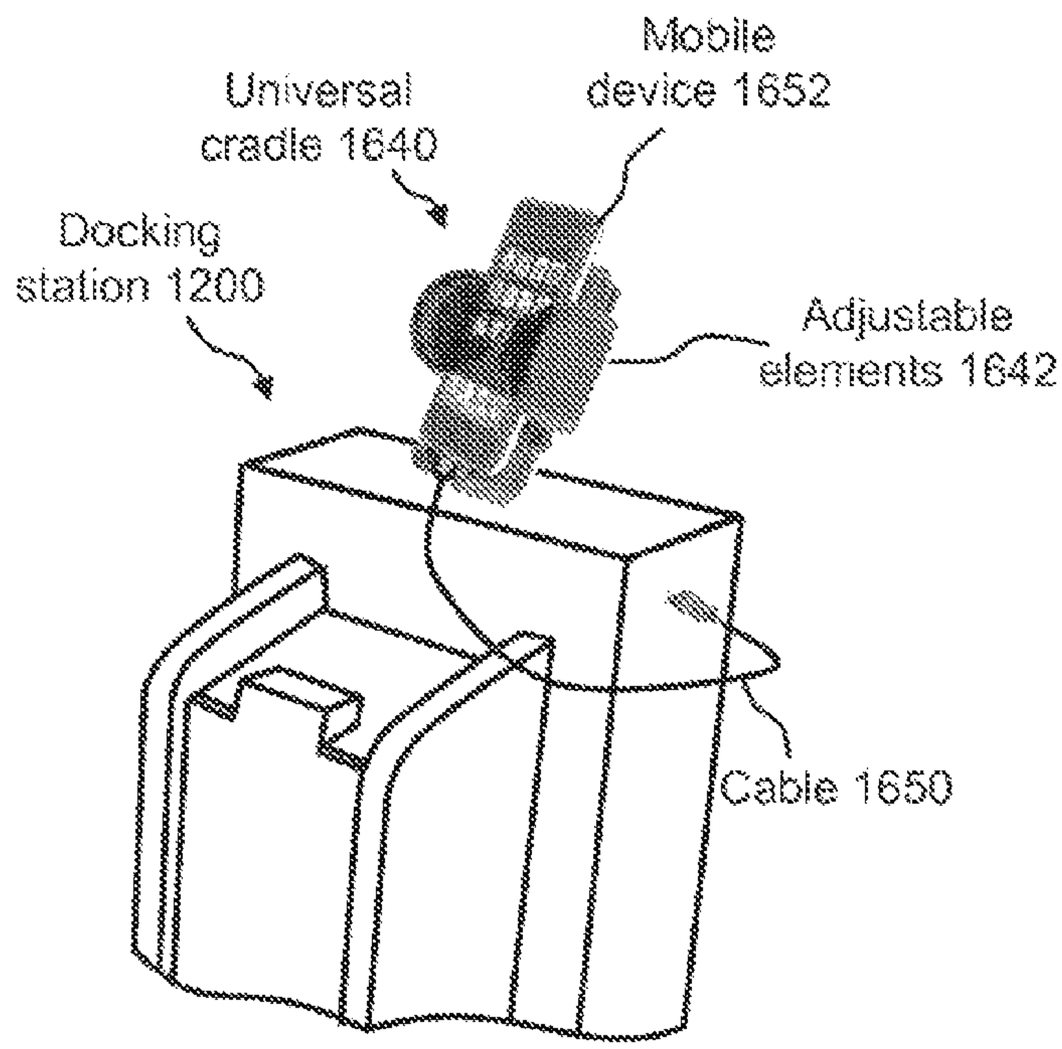

FIG. 23B

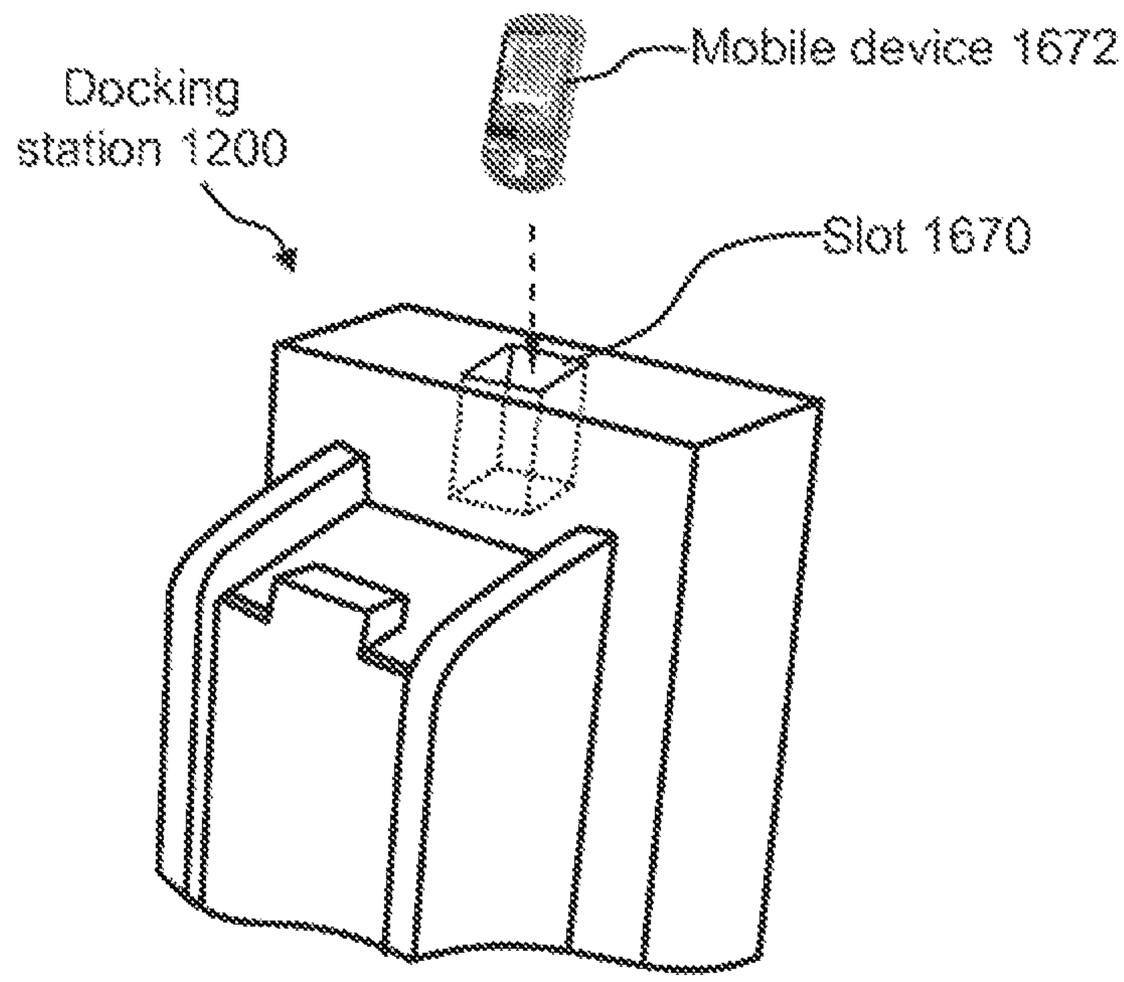

FIG. 24A

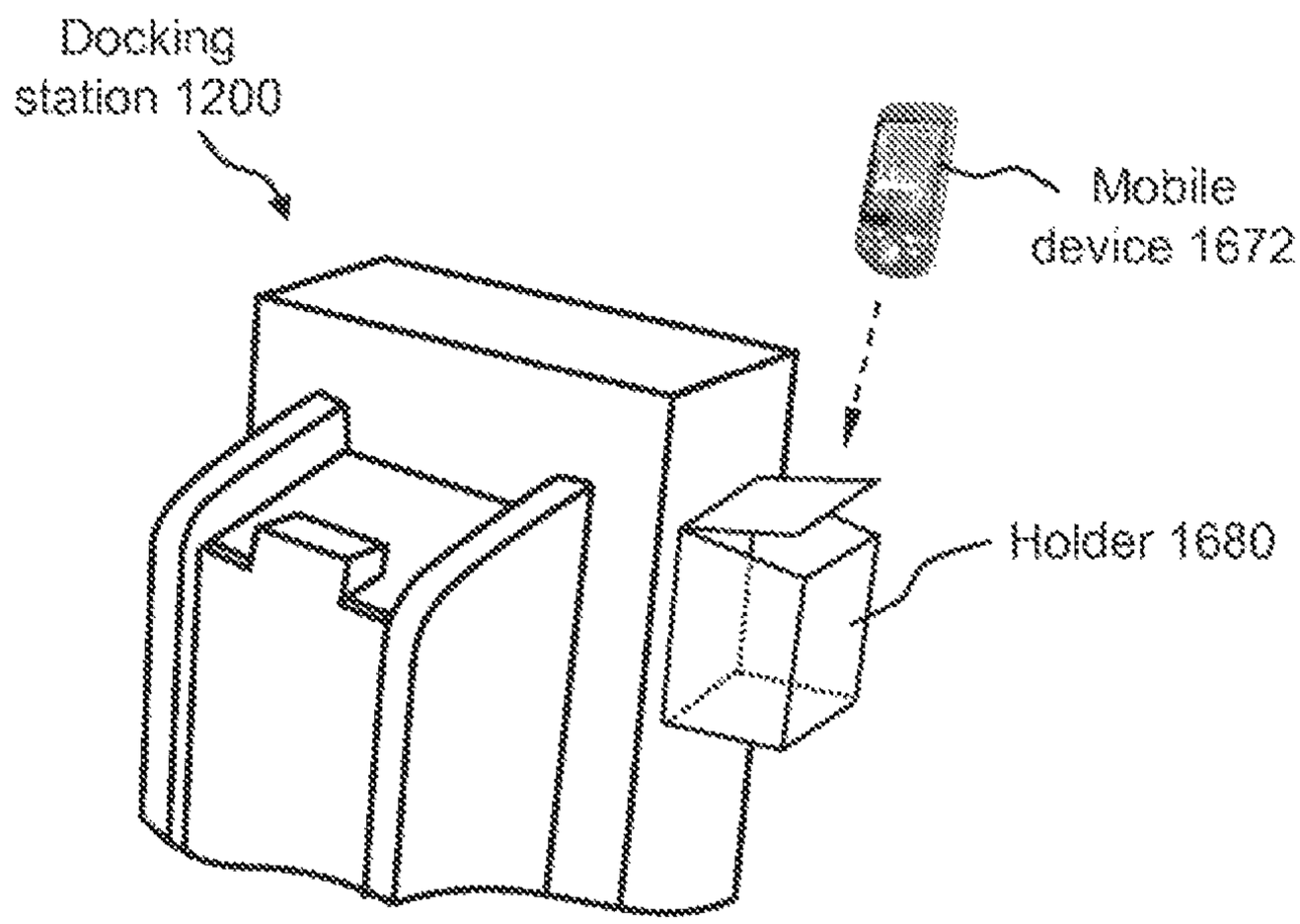

FIG. 24B

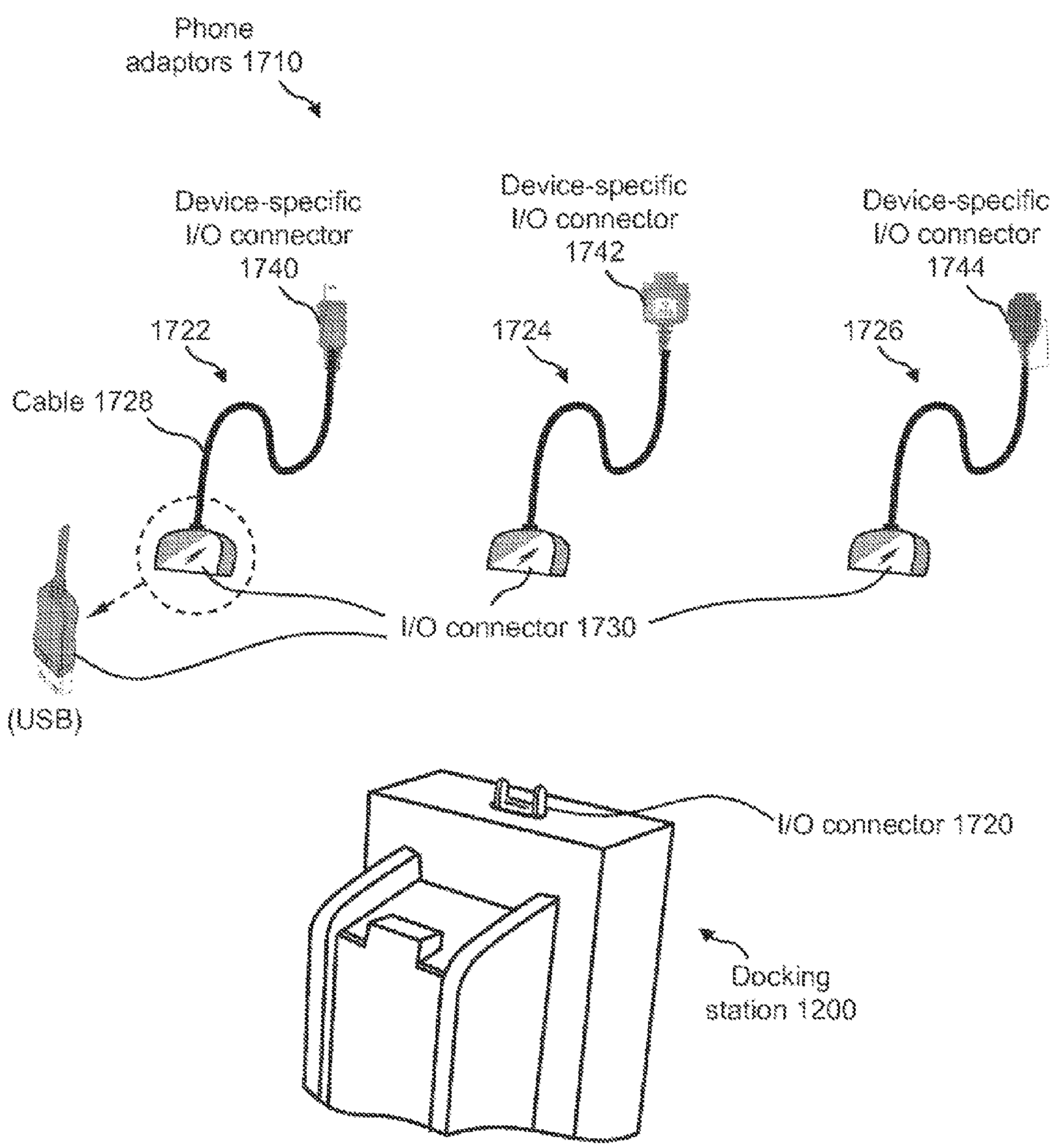
Phone
adaptors 1710
Device-specific
I/O connector
1740
Device-specific
I/O connector
1742
Device-specific
I/O connector
1744
1722
1724
1726
Cable 1728
I/O connector 1730
(USB)
I/O connector 1720
Docking
station 1200

FIG. 25

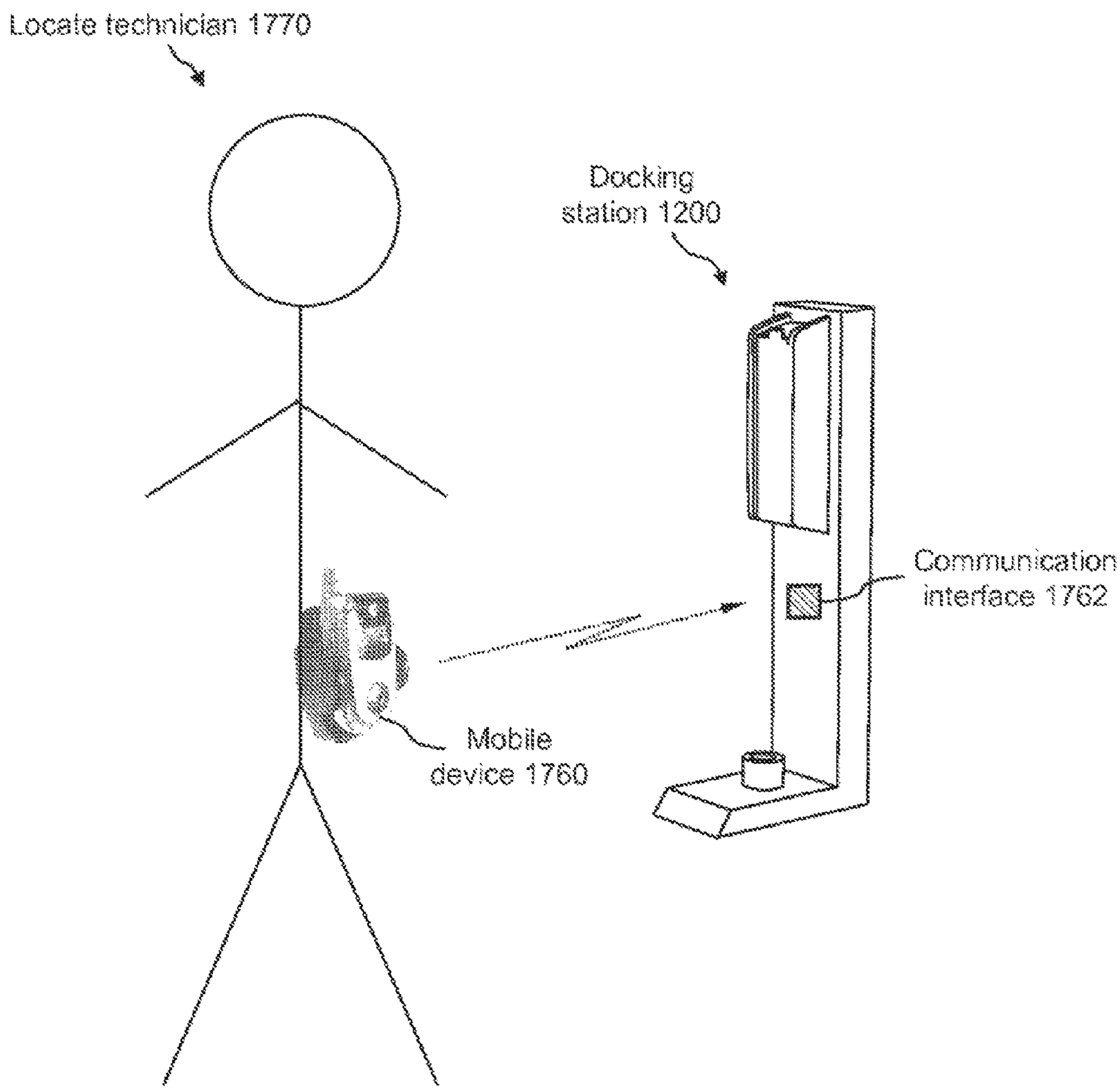
Locate technician 1770
Docking station 1200
Communication interface 1762
Mobile device 1760

FIG. 26

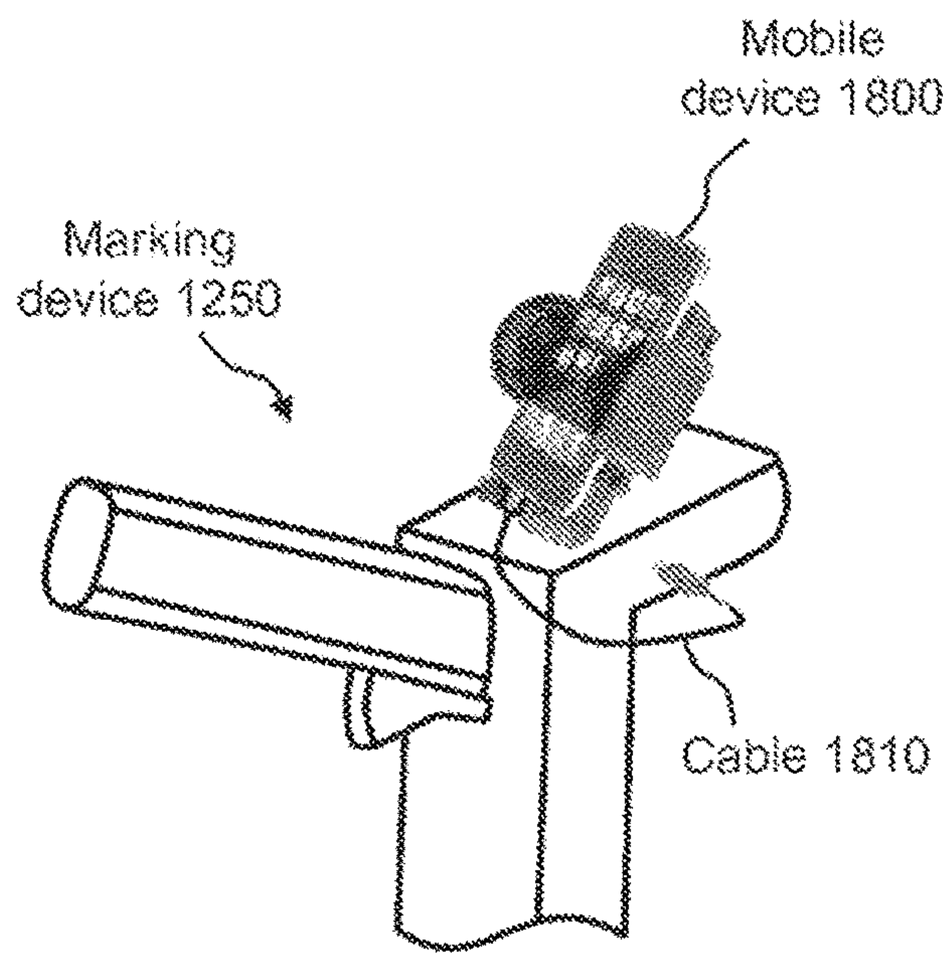

FIG. 27

LOCATING EQUIPMENT DOCKING STATION COMMUNICATIVELY COUPLED TO OR EQUIPPED WITH A MOBILE/PORTABLE DEVICE

CROSS-REFERENCE TO RELATED APPLICATION

The present application claims a priority benefit, under 35 U.S.C. §120, as a continuation (CON) of U.S. non provisional application Ser. No. 13/017,880, filed Jan. 31, 2011, entitled "Locating Equipment Docking Station Communicatively Coupled to or Equipped with a Mobile/Portable Device."

Ser. No. 13/017,880 in turn claims a priority benefit, under 35 U.S.C. §119(e), to U.S. provisional application Ser. No. 61/299,492, filed Jan. 29, 2010, entitled "Marking Device Docking Stations and Methods of Using Same."

Each of the above-identified applications is hereby incorporated herein by reference in its entirety.

BACKGROUND

Some types of field technicians, such as land surveyors and underground utility location technicians, use various types of marking materials to identify specific locations on the ground during their field work. For this purpose, the field technician may employ a "marking device" to dispense a marking material on the ground, pavement, or other surface. Marking material may be any material, substance, compound, and/or element, used separately or in combination to mark, signify, and/or indicate. Examples of marking materials may include, but are not limited to, paint, chalk, dye, and/or iron. Marking devices, such as paint marking wands and/or paint marking wheels, provide a convenient method of dispensing marking materials onto surfaces such as ground or pavement.

Conventional marking devices such as paint marking wands and/or paint marking wheels are relatively simple mechanical devices without electronic components, and hence are relatively inexpensive. Accordingly, the cost of individual marking devices generally is considered insignificant by the field technician using the device. Consequently, users/technicians may not take due care when handling such marking devices. As a result, marking devices are often mishandled, broken, or left behind in the field.

Further, users/technicians may carelessly stow marking devices in their vehicles. For example, users/technicians often toss marking devices into vehicles and leave them unsecured. In the event of a vehicle accident, the marking device may be thrown about the vehicle cab and cause injury to the passengers.

SUMMARY

The Applicants have designed significantly improved marking devices to facilitate more reliable and efficient performance of marking operations. Such marking devices also enable acquisition of various field information relating to use of the marking device and performance of marking operations, and storage and transmission of such information for analytical (e.g., quality assessment) and/or archival purposes. Examples of such marking devices are described in the following published U.S. applications: U.S. publication no. 2008-0228294-A1, published Sep. 18, 2008, filed Mar. 13, 2007, and entitled "Marking System and Method With Location and/or Time Tracking;" U.S. publication no. 2008-0245299-A1, published Oct. 9, 2008, filed Apr. 4, 2007, and entitled "Marking System and Method;" U.S. publication no. 2010-0086677 A1, published Apr. 8, 2010, filed Aug. 11, 2009, and entitled, "Methods and Apparatus for Generating an Electronic Record of a Marking Operation Including Service-Related Information and Ticket Information;" U.S. publication no. 2010-0088032-A1, published Apr. 8, 2010, filed Sep. 29, 2009, and entitled, "Methods, Apparatus and Systems for Generating Electronic Records of Locate And Marking Operations, and Combined Locate and Marking Apparatus for Same;" and U.S. publication no. 2010-0189887 A1, published Jul. 29, 2010, filed Feb. 11, 2010, and entitled "Marking Apparatus Having Enhanced Features for Underground Facility Marking Operations, and Associated Methods and Systems," each of which publications is incorporated herein by reference.

As marking devices become more complex and incorporate additional functions, these devices become more costly. Accordingly, Applicants have recognized and appreciated that approaches are needed to provide better ways of handling and keeping track of marking devices in the field. Similarly, as increased functionality is incorporated into marking devices, it is desirable to provide methods of managing data and power requirements of the marking devices in the field.

In view of the foregoing, various inventive embodiments disclosed herein relate to docking stations for use with such marking devices and to methods for using the docking station with a marking device. In various aspects, the docking station may serve as a home base for storage of a marking device, for charging the battery of a marking device, for facilitating data transfer to and from a marking device, and/or for securing a marking device against unauthorized use and/or theft. In some embodiments, the docking station may be a mobile docking station that is installed in a vehicle. In other embodiments, the docking station may be a fixed docking station that is installed in a central location in the field, at a central office, at a home base facility, and the like.

In some embodiments, a docking station may be communicatively coupled to and/or equipped with a mobile/portable device (e.g., a mobile computing device), such as a cellular phone or personal digital assistant (PDA), that provides processing, electronic storage, electronic display, user interface, communication facilities, and/or other functionality (e.g., GPS-enabled functionality) for the docking station. In some exemplary implementations, the mobile/portable device may provide essentially all of the processing and related functionality required to operate the docking station, while in other implementations the mobile/portable device may only provide some portion of the overall functionality. In yet other implementations, the mobile/portable device may provide redundant, shared and/or backup functionality for the docking station to enhance robustness.

In one exemplary implementation, a mobile/portable device may be mechanically coupled to the docking station (e.g., via an appropriate mobile device cradle, harness, or other attachment arrangement) or otherwise integrated with the docking station and communicatively coupled to the docking station (e.g., via one or more wired or wireless connections), so as to permit one or more electronic signals to be communicated between the mobile/portable device and other components of the docking station.

In some exemplary implementations, one or more electronic signals indicative of operation of the docking station may be supplied by one or more components of the docking station to the mobile/portable device. In other aspects, the

mobile/portable device may be appropriately programmed so as to log and generate electronic records of various locate information, marking information, and or landmark information, obtained from one or more pieces of locating equipment (e.g., marking devices, combined marking and locating devices) communicatively coupled to the docking station. Such records may be formatted in various manners, processed and/or analyzed on the mobile/portable device, and/or transmitted to another device (e.g., a remote computer/server) for storage, processing and/or analysis. In one example, one or more pieces of geo-location data (e.g., from a GPS receiver, which may be integrated into the mobile/portable device) are collected and logged on the mobile/portable device. A computer-generated image or other visual representation of a locate and/or marking operation may be electronically rendered in a display field of the mobile/portable device based on logged locate information, marking information, and/or landmark information.

In sum, one embodiment of the present invention is directed to an apparatus comprising a docking station to dock locating equipment of the type used to locate and/or mark a presence or an absence of an underground facility. The docking station comprises a mobile device interface to facilitate mechanical, electrical and/or communicative coupling of a mobile or portable computing device to the docking station.

Another embodiment is directed to a system comprising the above-mentioned docking station and the mobile or portable computing device communicatively coupled to the docking station via the mobile device interface.

Another embodiment is directed to a method for docking locating equipment of the type used to locate and/or mark a presence or an absence of an underground facility. The method comprises: mechanically, electronically and/or communicatively coupling the locating equipment to a docking station; and performing one or more operations of the docking station using a mobile or computing device communicatively coupled to the docking station.

Another embodiment is directed to a docking station for docking a marking device of the type used to mark a presence or an absence of an underground facility. The docking station comprises a mobile computing device including an electronic interface configured to transfer information to and from the marking device, the mobile computing device programmed to perform at least one operation involving communication with the marking device and functioning as a docking station for the marking device.

Another embodiment is directed to a method for operating a marking device of the type used to mark a presence or an absence of an underground facility. The method comprises: electronically coupling a mobile computing device to the marking device; and transferring information to and between the marking device and the mobile computing device, wherein the mobile computing device functions as a docking station for the marking device.

Another embodiment is directed to a system, comprising a marking device configured to mark a presence or an absence of an underground facility, and a mobile computing device communicatively coupled to the marking device, wherein the mobile computing device functions as a docking station for the marking device.

For purposes of the present disclosure, the term "dig area" refers to a specified area of a work site within which there is a plan to disturb the ground (e.g., excavate, dig holes and/or trenches, bore, etc.), and beyond which there is no plan to excavate in the immediate surroundings. Thus, the metes and bounds of a dig area are intended to provide specificity as to where some disturbance to the ground is planned at a given work site. It should be appreciated that a given work site may include multiple dig areas.

The term "facility" refers to one or more lines, cables, fibers, conduits, transmitters, receivers, or other physical objects or structures capable of or used for carrying, transmitting, receiving, storing, and providing utilities, energy, data, substances, and/or services, and/or any combination thereof. The term "underground facility" means any facility beneath the surface of the ground. Examples of facilities include, but are not limited to, oil, gas, water, sewer, power, telephone, data transmission, cable television (TV), and/or internet services.

The term "locate device" refers to any apparatus and/or device for detecting and/or inferring the presence or absence of any facility, including without limitation, any underground facility. In various examples, a locate device may include both a locate transmitter and a locate receiver (which in some instances may also be referred to collectively as a "locate instrument set," or simply "locate set").

The term "marking device" refers to any apparatus, mechanism, or other device that employs a marking dispenser for causing a marking material and/or marking object to be dispensed, or any apparatus, mechanism, or other device for electronically indicating (e.g., logging in memory) a location, such as a location of an underground facility. Additionally, the term "marking dispenser" refers to any apparatus, mechanism, or other device for dispensing and/or otherwise using, separately or in combination, a marking material and/or a marking object. An example of a marking dispenser may include, but is not limited to, a pressurized can of marking paint. The term "marking material" means any material, substance, compound, and/or element, used or which may be used separately or in combination to mark, signify, and/or indicate. Examples of marking materials may include, but are not limited to, paint, chalk, dye, and/or iron. The term "marking object" means any object and/or objects used or which may be used separately or in combination to mark, signify, and/or indicate. Examples of marking objects may include, but are not limited to, a flag, a dart, and arrow, and/or an RFID marking ball. It is contemplated that marking material may include marking objects. It is further contemplated that the terms "marking materials" or "marking objects" may be used interchangeably in accordance with the present disclosure.

The term "locate mark" means any mark, sign, and/or object employed to indicate the presence or absence of any underground facility. Examples of locate marks may include, but are not limited to, marks made with marking materials, marking objects, global positioning or other information, and/or any other means. Locate marks may be represented in any form including, without limitation, physical, visible, electronic, and/or any combination thereof.

The terms "actuate" or "trigger" (verb form) are used interchangeably to refer to starting or causing any device, program, system, and/or any combination thereof to work, operate, and/or function in response to some type of signal or stimulus. Examples of actuation signals or stimuli may include, but are not limited to, any local or remote, physical, audible, inaudible, visual, non-visual, electronic, mechanical, electromechanical, biomechanical, biosensing or other signal, instruction, or event. The terms "actuator" or "trigger" (noun form) are used interchangeably to refer to any method or device used to generate one or more signals or stimuli to cause or causing actuation. Examples of an actuator/trigger may include, but are not limited to, any form or combination of a lever, switch, program, processor,

screen, microphone for capturing audible commands, and/or other device or method. An actuator/trigger may also include, but is not limited to, a device, software, or program that responds to any movement and/or condition of a user, such as, but not limited to, eye movement, brain activity, heart rate, other data, and/or the like, and generates one or more signals or stimuli in response thereto. In the case of a marking device or other marking mechanism (e.g., to physically or electronically mark a facility or other feature), actuation may cause marking material to be dispensed, as well as various data relating to the marking operation (e.g., geographic location, time stamps, characteristics of material dispensed, etc.) to be logged in an electronic file stored in memory. In the case of a locate device or other locate mechanism (e.g., to physically locate a facility or other feature), actuation may cause a detected signal strength, signal frequency, depth, or other information relating to the locate operation to be logged in an electronic file stored in memory.

The terms "locate and marking operation," "locate operation," and "locate" generally are used interchangeably and refer to any activity to detect, infer, and/or mark the presence or absence of an underground facility. In some contexts, the term "locate operation" is used to more specifically refer to detection of one or more underground facilities, and the term "marking operation" is used to more specifically refer to using a marking material and/or one or more marking objects to mark a presence or an absence of one or more underground facilities. The term "locate technician" refers to an individual performing a locate operation. A locate and marking operation often is specified in connection with a dig area, at least a portion of which may be excavated or otherwise disturbed during excavation activities.

The term "user" refers to an individual utilizing a locate device and/or a marking device and may include, but is not limited to, land surveyors, locate technicians, and support personnel.

The term "power source" refers to an apparatus, a device, a system, and/or any other means, and/or any combination thereof that generates, transmits, converts, and/or supplies power or energy, including, but not limited to, electrical power.

The following U.S. published applications are hereby incorporated herein by reference:

U.S. Pat. No. 7,640,105, issued Dec. 29, 2009, filed Mar. 13, 2007, and entitled "Marking System and Method With Location and/or Time Tracking;"

U.S. publication no. 2010-0094553-A1, published Apr. 15, 2010, filed Dec. 16, 2009, and entitled "Systems and Methods for Using Location Data and/or Time Data to Electronically Display Dispensing of Markers by A Marking System or Marking Tool;"

U.S. publication no. 2008-0245299-A1, published Oct. 9, 2008, filed Apr. 4, 2007, and entitled "Marking System and Method;"

U.S. publication no. 2009-0013928-A1, published Jan. 15, 2009, filed Sep. 24, 2008, and entitled "Marking System and Method;"

U.S. publication no. 2010-0090858-A1, published Apr. 15, 2010, filed Dec. 16, 2009, and entitled "Systems and Methods for Using Marking Information to Electronically Display Dispensing of Markers by a Marking System or Marking Tool;"

U.S. publication no. 2009-0238414-A1, published Sep. 24, 2009, filed Mar. 18, 2008, and entitled "Virtual White Lines for Delimiting Planned Excavation Sites;"

U.S. publication no. 2009-0241045-A1, published Sep. 24, 2009, filed Sep. 26, 2008, and entitled "Virtual White Lines for Delimiting Planned Excavation Sites;"

U.S. publication no. 2009-0238415-A1, published Sep. 24, 2009, filed Sep. 26, 2008, and entitled "Virtual White Lines for Delimiting Planned Excavation Sites;"

U.S. publication no. 2009-0241046-A1, published Sep. 24, 2009, filed Jan. 16, 2009, and entitled "Virtual White Lines for Delimiting Planned Excavation Sites;"

U.S. publication no. 2009-0238416-A1, published Sep. 24, 2009, filed Jan. 16, 2009, and entitled "Virtual White Lines for Delimiting Planned Excavation Sites;"

U.S. publication no. 2009-0237408-A1, published Sep. 24, 2009, filed Jan. 16, 2009, and entitled "Virtual White Lines for Delimiting Planned Excavation Sites;"

U.S. publication no. 2009-0202101-A1, published Aug. 13, 2009, filed Feb. 12, 2008, and entitled "Electronic Manifest of Underground Facility Locate Marks;"

U.S. publication no. 2009-0202110-A1, published Aug. 13, 2009, filed Sep. 11, 2008, and entitled "Electronic Manifest of Underground Facility Locate Marks;"

U.S. publication no. 2009-0201311-A1, published Aug. 13, 2009, filed Jan. 30, 2009, and entitled "Electronic Manifest of Underground Facility Locate Marks;"

U.S. publication no. 2009-0202111-A1, published Aug. 13, 2009, filed Jan. 30, 2009, and entitled "Electronic Manifest of Underground Facility Locate Marks;"

U.S. publication no. 2009-0204625-A1, published Aug. 13, 2009, filed Feb. 5, 2009, and entitled "Electronic Manifest of Underground Facility Locate Operation;"

U.S. publication no. 2009-0204466-A1, published Aug. 13, 2009, filed Sep. 4, 2008, and entitled "Ticket Approval System For and Method of Performing Quality Control In Field Service Applications;"

U.S. publication no. 2009-0207019-A1, published Aug. 20, 2009, filed Apr. 30, 2009, and entitled "Ticket Approval System For and Method of Performing Quality Control In Field Service Applications;"

U.S. publication no. 2009-0210284-A1, published Aug. 20, 2009, filed Apr. 30, 2009, and entitled "Ticket Approval System For and Method of Performing Quality Control In Field Service Applications;"

U.S. publication no. 2009-0210297-A1, published Aug. 20, 2009, filed Apr. 30, 2009, and entitled "Ticket Approval System For and Method of Performing Quality Control In Field Service Applications;"

U.S. publication no. 2009-0210298-A1, published Aug. 20, 2009, filed Apr. 30, 2009, and entitled "Ticket Approval System For and Method of Performing Quality Control In Field Service Applications;"

U.S. publication no. 2009-0210285-A1, published Aug. 20, 2009, filed Apr. 30, 2009, and entitled "Ticket Approval System For and Method of Performing Quality Control In Field Service Applications;"

U.S. publication no. 2009-0324815-A1, published Dec. 31, 2009, filed Apr. 24, 2009, and entitled "Marking Apparatus and Marking Methods Using Marking Dispenser with Machine-Readable ID Mechanism;"

U.S. publication no. 2010-0006667-A1, published Jan. 14, 2010, filed Apr. 24, 2009, and entitled, "Marker Detection Mechanisms for use in Marking Devices And Methods of Using Same;"

U.S. publication no. 2010-0085694 A1, published Apr. 8, 2010, filed Sep. 30, 2009, and entitled, "Marking Device Docking Stations and Methods of Using Same;"

U.S. publication no. 2010-0085701 A1, published Apr. 8, 2010, filed Sep. 30, 2009, and entitled, "Marking Device Docking Stations Having Security Features and Methods of Using Same;"

U.S. publication no. 2010-0084532 A1, published Apr. 8, 2010, filed Sep. 30, 2009, and entitled, "Marking Device Docking Stations Having Mechanical Docking and Methods of Using Same;"

U.S. publication no. 2010-0088032-A1, published Apr. 8, 2010, filed Sep. 29, 2009, and entitled, "Methods, Apparatus and Systems for Generating Electronic Records of Locate And Marking Operations, and Combined Locate and Marking Apparatus for Same;"

U.S. publication no. 2010-0117654 A1, published May 13, 2010, filed Dec. 30, 2009, and entitled, "Methods and Apparatus for Displaying an Electronic Rendering of a Locate and/or Marking Operation Using Display Layers;"

U.S. publication no. 2010-0086677 A1, published Apr. 8, 2010, filed Aug. 11, 2009, and entitled, "Methods and Apparatus for Generating an Electronic Record of a Marking Operation Including Service-Related Information and Ticket Information;"

U.S. publication no. 2010-0086671 A1, published Apr. 8, 2010, filed Nov. 20, 2009, and entitled, "Methods and Apparatus for Generating an Electronic Record of A Marking Operation Including Service-Related Information and Ticket Information;"

U.S. publication no. 2010-0085376 A1, published Apr. 8, 2010, filed Oct. 28, 2009, and entitled, "Methods and Apparatus for Displaying an Electronic Rendering of a Marking Operation Based on an Electronic Record of Marking Information;"

U.S. publication no. 2010-0088164-A1, published Apr. 8, 2010, filed Sep. 30, 2009, and entitled, "Methods and Apparatus for Analyzing Locate and Marking Operations with Respect to Facilities Maps;"

U.S. publication no. 2010-0088134 A1, published Apr. 8, 2010, filed Oct. 1, 2009, and entitled, "Methods and Apparatus for Analyzing Locate and Marking Operations with Respect to Historical Information;"

U.S. publication no. 2010-0088031 A1, published Apr. 8, 2010, filed Sep. 28, 2009, and entitled, "Methods and Apparatus for Generating an Electronic Record of Environmental Landmarks Based on Marking Device Actuations;"

U.S. publication no. 2010-0188407 A1, published Jul. 29, 2010, filed Feb. 5, 2010, and entitled "Methods and Apparatus for Displaying and Processing Facilities Map Information and/or Other Image Information on a Marking Device;"

U.S. publication no. 2010-0198663 A1, published Aug. 5, 2010, filed Feb. 5, 2010, and entitled "Methods and Apparatus for Overlaying Electronic Marking Information on Facilities Map Information and/or Other Image Information Displayed on a Marking Device;"

U.S. publication no. 2010-0188215 A1, published Jul. 29, 2010, filed Feb. 5, 2010, and entitled "Methods and Apparatus for Generating Alerts on a Marking Device, Based on Comparing Electronic Marking Information to Facilities Map Information and/or Other Image Information;"

U.S. publication no. 2010-0188088 A1, published Jul. 29, 2010, filed Feb. 5, 2010, and entitled "Methods and Apparatus for Displaying and Processing Facilities Map Information and/or Other Image Information on a Locate Device;"

U.S. publication no. 2010-0189312 A1, published Jul. 29, 2010, filed Feb. 5, 2010, and entitled "Methods and Apparatus for Overlaying Electronic Locate Information on Facilities Map Information and/or Other Image Information Displayed on a Locate Device;"

U.S. publication no. 2010-0188216 A1, published Jul. 29, 2010, filed Feb. 5, 2010, and entitled "Methods and Apparatus for Generating Alerts on a Locate Device, Based ON Comparing Electronic Locate Information TO Facilities Map Information and/or Other Image Information;"

U.S. publication no. 2010-0189887 A1, published Jul. 29, 2010, filed Feb. 11, 2010, and entitled "Marking Apparatus Having Enhanced Features for Underground Facility Marking Operations, and Associated Methods and Systems;"

U.S. publication no. 2010-0188245 A1, published Jul. 29, 2010, filed Feb. 11, 2010, and entitled "Locate Apparatus Having Enhanced Features for Underground Facility Locate Operations, and Associated Methods and Systems;"

U.S. publication no. 2009-0204238-A1, published Aug. 13, 2009, filed Feb. 2, 2009, and entitled "Electronically Controlled Marking Apparatus and Methods;"

U.S. publication no. 2009-0208642-A1, published Aug. 20, 2009, filed Feb. 2, 2009, and entitled "Marking Apparatus and Methods For Creating an Electronic Record of Marking Operations;"

U.S. publication no. 2009-0210098-A1, published Aug. 20, 2009, filed Feb. 2, 2009, and entitled "Marking Apparatus and Methods For Creating an Electronic Record of Marking Apparatus Operations;"

U.S. publication no. 2009-0201178-A1, published Aug. 13, 2009, filed Feb. 2, 2009, and entitled "Methods For Evaluating Operation of Marking Apparatus;"

U.S. publication no. 2009-0238417-A1, published Sep. 24, 2009, filed Feb. 6, 2009, and entitled "Virtual White Lines for Indicating Planned Excavation Sites on Electronic Images;"

U.S. publication no. 2010-0205264-A1, published Aug. 12, 2010, filed Feb. 10, 2010, and entitled "Methods, Apparatus, and Systems for Exchanging Information Between Excavators and Other Entities Associated with Underground Facility Locate and Marking Operations;"

U.S. publication no. 2010-0205031-A1, published Aug. 12, 2010, filed Feb. 10, 2010, and entitled "Methods, Apparatus, and Systems for Exchanging Information Between Excavators and Other Entities Associated with Underground Facility Locate and Marking Operations;"

U.S. publication no. 2010-0201706-A1, published Aug. 12, 2010, filed Jun. 1, 2009, and entitled "Virtual White Lines (VWL) for Delimiting Planned Excavation Sites of Staged Excavation Projects;"

U.S. publication no. 2010-0205555-A1, published Aug. 12, 2010, filed Jun. 1, 2009, and entitled "Virtual White Lines (VWL) for Delimiting Planned Excavation Sites of Staged Excavation Projects;"

U.S. publication no. 2010-0205195-A1, published Aug. 12, 2010, filed Jun. 1, 2009, and entitled "Methods and Apparatus for Associating a Virtual White Line (VWL) Image with Corresponding Ticket Information for an Excavation Project;"

U.S. publication no. 2010-0205536-A1, published Aug. 12, 2010, filed Jun. 1, 2009, and entitled "Methods and Apparatus for Controlling Access to a Virtual White Line (VWL) Image for an Excavation Project;"

U.S. publication no. 2010-0228588-A1, published Sep. 9, 2010, filed Feb. 11, 2010, and entitled "Management System, and Associated Methods and Apparatus, for Providing Improved Visibility, Quality Control and Audit Capability for Underground Facility Locate and/or Marking Operations;"

U.S. publication no. 2010-0201690-A1, published Aug. 12, 2010, filed Apr. 13, 2009, and entitled "Virtual White Lines (VWL) Application for Indicating a Planned Excavation or Locate Path;"

U.S. publication no. 2010-0205554-A1, published Aug. 12, 2010, filed Apr. 13, 2009, and entitled "Virtual White Lines (VWL) Application for Indicating an Area of Planned Excavation;"

U.S. publication no. 2009-0202112-A1, published Aug. 13, 2009, filed Feb. 11, 2009, and entitled "Searchable Electronic Records of Underground Facility Locate Marking Operations;"

U.S. publication no. 2009-0204614-A1, published Aug. 13, 2009, filed Feb. 11, 2009, and entitled "Searchable Electronic Records of Underground Facility Locate Marking Operations;"

U.S. publication no. 2010-0205032-A1, published Aug. 12, 2010, filed Feb. 11, 2010, and entitled "Marking Apparatus Equipped with Ticket Processing Software for Facilitating Marking Operations, and Associated Methods;"

U.S. publication no. 2009-0327024-A1, published Dec. 31, 2009, filed Jun. 26, 2009, and entitled "Methods and Apparatus for Quality Assessment of a Field Service Operation;"

U.S. publication no. 2010-0010862-A1, published Jan. 14, 2010, filed Aug. 7, 2009, and entitled, "Methods and Apparatus for Quality Assessment of a Field Service Operation Based on Geographic Information;"

U.S. publication No. 2010-0010863-A1, published Jan. 14, 2010, filed Aug. 7, 2009, and entitled, "Methods and Apparatus for Quality Assessment of a Field Service Operation Based on Multiple Scoring Categories;"

U.S. publication no. 2010-0010882-A1, published Jan. 14, 2010, filed Aug. 7, 2009, and entitled, "Methods and Apparatus for Quality Assessment of a Field Service Operation Based on Dynamic Assessment Parameters;"

U.S. publication no. 2010-0010883-A1, published Jan. 14, 2010, filed Aug. 7, 2009, and entitled, "Methods and Apparatus for Quality Assessment of a Field Service Operation Based on Multiple Quality Assessment Criteria;"

U.S. publication no. 2010-0088135 A1, published Apr. 8, 2010, filed Oct. 1, 2009, and entitled, "Methods and Apparatus for Analyzing Locate and Marking Operations with Respect to Environmental Landmarks;"

U.S. publication no. 2010-0085185 A1, published Apr. 8, 2010, filed Sep. 30, 2009, and entitled, "Methods and Apparatus for Generating Electronic Records of Locate Operations;"

U.S. publication no. 2010-0090700-A1, published Apr. 15, 2010, filed Oct. 30, 2009, and entitled "Methods and Apparatus for Displaying an Electronic Rendering of a Locate Operation Based on an Electronic Record of Locate Information;"

U.S. publication no. 2010-0085054 A1, published Apr. 8, 2010, filed Sep. 30, 2009, and entitled, "Systems and Methods for Generating Electronic Records of Locate And Marking Operations;"

U.S. publication no. 2010-0256825-A1, published Oct. 7, 2010, filed Jun. 9, 2010, and entitled "Marking Apparatus Having Operational Sensors For Underground Facility Marking Operations, And Associated Methods And Systems;"

U.S. publication no. 2010-0255182-A1, published Oct. 7, 2010, filed Jun. 9, 2010, and entitled "Marking Apparatus Having Operational Sensors For Underground Facility Marking Operations, And Associated Methods And Systems;"

U.S. publication no. 2010-0245086-A1, published Sep. 30, 2010, filed Jun. 9, 2010, and entitled "Marking Apparatus Configured To Detect Out-Of-Tolerance Conditions In Connection With Underground Facility Marking Operations, And Associated Methods And Systems;"

U.S. publication no. 2010-0247754-A1, published Sep. 30, 2010, filed Jun. 9, 2010, and entitled "Methods and Apparatus For Dispensing Marking Material In Connection With Underground Facility Marking Operations Based on Environmental Information and/or Operational Information;"

U.S. publication no. 2010-0262470-A1, published Oct. 14, 2010, filed Jun. 9, 2010, and entitled "Methods, Apparatus, and Systems For Analyzing Use of a Marking Device By a Technician To Perform An Underground Facility Marking Operation;"

U.S. publication no. 2010-0263591-A1, published Oct. 21, 2010, filed Jun. 9, 2010, and entitled "Marking Apparatus Having Environmental Sensors and Operations Sensors for Underground Facility Marking Operations, and Associated Methods and Systems;"

U.S. publication no. 2010-0253511-A1, published Oct. 7, 2010, filed Jun. 18, 2010, and entitled "Locate Apparatus Configured to Detect Out-of-Tolerance Conditions in Connection with Underground Facility Locate Operations, and Associated Methods and Systems;"

U.S. publication no. 2010-0257029-A1, published Oct. 7, 2010, filed Jun. 18, 2010, and entitled "Methods, Apparatus, and Systems For Analyzing Use of a Locate Device By a Technician to Perform an Underground Facility Locate Operation;"

U.S. publication no. 2010-0253513-A1, published Oct. 7, 2010, filed Jun. 18, 2010, and entitled "Locate Transmitter Having Enhanced Features For Underground Facility Locate Operations, and Associated Methods and Systems;"

U.S. publication no. 2010-0253514-A1, published Oct. 7, 2010, filed Jun. 18, 2010, and entitled "Locate Transmitter Configured to Detect Out-of-Tolerance Conditions In Connection With Underground Facility Locate Operations, and Associated Methods and Systems;"

U.S. publication no. 2010-0256912-A1, published Oct. 7, 2010, filed Jun. 18, 2010, and entitled "Locate Apparatus for Receiving Environmental Information Regarding Underground Facility Marking Operations, and Associated Methods and Systems;"

U.S. publication no. 2010-0259381-A1, published Oct. 14, 2010, filed Jun. 28, 2010, and entitled "Methods, Apparatus and Systems for Notifying Excavators and Other Entities of the Status of in-Progress Underground Facility Locate and Marking Operations;"

U.S. publication no. 2010-0262670-A1, published Oct. 14, 2010, filed Jun. 28, 2010, and entitled "Methods, Apparatus and Systems for Communicating Information Relating to the Performance of Underground Facility Locate and Marking Operations to Excavators and Other Entities;"

U.S. publication no. 2010-0259414-A1, published Oct. 14, 2010, filed Jun. 28, 2010, and entitled "Methods, Apparatus And Systems For Submitting Virtual White Line Drawings And Managing Notifications In Connection With Underground Facility Locate And Marking Operations;"

U.S. publication no. 2010-0268786-A1, published Oct. 21, 2010, filed Jun. 28, 2010, and entitled "Methods, Apparatus and Systems for Requesting Underground Facility Locate and Marking Operations and Managing Associated Notifications;"

U.S. publication no. 2010-0257477-A1, published Oct. 7, 2010, filed Apr. 2, 2010, and entitled "Methods, Apparatus,

and Systems for Documenting and Reporting Events Via Time-Elapsed Geo-Referenced Electronic Drawings;"

U.S. publication no. 2010-0256981-A1, published Oct. 7, 2010, filed Apr. 2, 2010, and entitled "Methods, Apparatus, and Systems for Documenting and Reporting Events Via Time-Elapsed Geo-Referenced Electronic Drawings;"

U.S. publication no. 2010-0285211-A1, published Nov. 11, 2010, filed Apr. 21, 2010, and entitled "Method Of Using Coded Marking Patterns In Underground Facilities Locate Operations."

It should be appreciated that all combinations of the foregoing concepts and additional concepts discussed in greater detail below (provided such concepts are not mutually inconsistent) are contemplated as being part of the inventive subject matter disclosed herein. In particular, all combinations of claimed subject matter appearing at the end of this disclosure are contemplated as being part of the inventive subject matter disclosed herein. It should also be appreciated that terminology explicitly employed herein that also may appear in any disclosure incorporated by reference should be accorded a meaning most consistent with the particular concepts disclosed herein.

BRIEF DESCRIPTION OF THE DRAWINGS

The skilled artisan will understand that the figures, described herein, are for illustration purposes only, and that the drawings are not intended to limit the scope of the disclosed teachings in any way. In some instances, various aspects or features may be shown exaggerated or enlarged to facilitate an understanding of the inventive concepts disclosed herein (the drawings are not necessarily to scale, emphasis instead being placed upon illustrating the principles of the teachings). In the drawings, like reference characters generally refer to like features, functionally similar and/or structurally similar elements throughout the various figures.

FIG. **1** is a schematic design of a docking station and a marking device, with the marking device removed from the docking station, according to embodiments of the invention;

FIG. **2** is a schematic diagram of a marking device attached to a docking station;

FIG. **3**A is a simplified block diagram of a system that includes an electronic docking station coupled to a marking device, in accordance with embodiments of the invention;

FIG. **3**B is a simplified block diagram of a system that includes an electronic and mechanical docking station coupled to a marking device, in accordance with embodiments of the invention;

FIG. **3**C is a simplified block diagram of a system that includes a mechanical docking station coupled to a marking device, in accordance with embodiments of the invention;

FIG. **4** is a schematic block diagram of docking station electronics, in accordance with embodiments of the invention;

FIG. **5**A is a top view of a portion of a docking station;

FIG. **5**B is a side view of a portion of a docking station;

FIG. **6**A is a side view of a portion of a marking device that may be attached to a docking station;

FIG. **6**B is a bottom view of a portion of a marking device that may be attached to a docking station;

FIG. **7** is a side view of a marking device being attached to a docking station;

FIG. **8**A is a top view of an exemplary vehicle configuration incorporating a docking station;

FIG. **8**B is a top view of another exemplary vehicle configuration incorporating a docking station;

FIG. **8**C is a schematic block diagram of a network system incorporating a docking station;

FIG. **9** is a flow diagram of a method of using a docking station;

FIG. **10** is a flow diagram of another method of using a docking station;

FIG. **11** is a schematic diagram of a marking device attached to a docking station, according to another embodiment of the invention;

FIG. **12** is a flow diagram of an additional method of using a docking station;

FIG. **13** is a schematic diagram of an exemplary configuration incorporating docking stations;

FIG. **14** is a perspective view of an embodiment of a docking station and a marking device, with the marking device removed from the docking station;

FIG. **15** is an enlarged perspective view of a portion of the docking station and marking device of FIG. **14**;

FIG. **16** is a perspective view of the docking station with the marking device docked therein;

FIG. **17** is a perspective view of a marking device docking station that has processing and communications capability, in accordance with embodiments of the invention;

FIG. **18** is a schematic diagram of multiple fixed marking device docking stations in communication with a central computing device, which is one example of a docking station network, in accordance with embodiments of the invention;

FIG. **19** is a schematic diagram of multiple mobile marking device docking stations in the field and in communication with an onsite computing device, which is another example of a docking station network, in accordance with embodiments of the invention;

FIG. **20** is a schematic diagram of multiple mobile marking device docking stations in the field and in communication with each other, which is yet another example of a docking station network, in accordance with embodiments of the invention;

FIG. **21** is a schematic diagram of at least one marking device docking station in communication with at least one marking device, which is still another example of a docking station network, in accordance with embodiments of the invention;

FIGS. **22**A-**22**D are perspective views of exemplary mobile device-specific cradles integrated into a docking station, in accordance with embodiments of the invention;

FIGS. **23**A and **23**B are perspective views of an exemplary mobile device universal cradle integrated into a docking station, in accordance with embodiments of the invention;

FIGS. **24**A and **24**B are perspective views of an exemplary slot, pocket, and/or pouch in a docking station for holding a mobile device, in accordance with embodiments of the invention;

FIG. **25** is a perspective view of exemplary mobile device-specific adaptors for use with a docking station, in accordance with embodiments of the invention;

FIG. **26** is a perspective view of a user-worn mobile device in communication with a docking station, in accordance with embodiments of the invention; and

FIG. **27** is a perspective view of a mobile device connected to a marking device, the mobile device functioning as a docking station for the marking device, in accordance with embodiments of the invention.

DETAILED DESCRIPTION

Following below are descriptions of various concepts related to, and inventive embodiments of, locating equip-

ment docking stations communicatively coupled to and/or equipped with a mobile/portable device. It should be appreciated that various concepts introduced above and discussed in greater detail below may be implemented in any of numerous ways, as the disclosed concepts are not limited to any particular manner of implementation. Examples of specific implementations and applications are provided primarily for illustrative purposes.

In embodiments discussed below in connection with the figures, various concepts relating to docking stations for locating equipment are introduced for purposes of illustration using a marking device as an exemplary piece of locating equipment. It should be appreciated, however, that the inventive concepts disclosed herein are not limited in this respect, and that docking stations according to the present disclosure may be configured to facilitate docking (and various functionality associated therewith) of various types of locating equipment, examples of which include marking devices, locate devices, and combined locate and marking devices (as described in various U.S. publications incorporated herein by reference).

FIG. **1** illustrates a docking station **100** and a marking device **150**, removed from docking station **100**, according to one embodiment of the present invention. Docking station **100** may be installed in, for example, a vehicle and is suitable for use in conjunction with marking device **150**. In other embodiments, the docking station **100** may be installed at a central facility, office or other fixed location. Thus, the docking station **100** may be mobile or fixed. Docking station **100** may serve as a home base for storage of marking device **150** and for charging the battery of marking device **150**.

Docking station **100** may include a base **110** and a support housing **114**. Base **110** and support housing **114** may be made of any suitably strong, rigid, and lightweight material. Such material may include, but is not limited to, molded plastic and metal. Docking station **100** may be designed and constructed to be bolted to the body of a vehicle and may be made of materials that prevent unauthorized removal from a vehicle. In the embodiment of FIG. **1**, docking station **100** is configured and mounted to support marking device **150** in an upright, or vertical, position. In other embodiments, docking station may be configured and mounted to support marking device **150** in a horizontal position or in any other position.

In an embodiment, a cradle **118** is integrated into the upper end of support housing **114**. This provides a mechanism to mechanically and electrically couple marking device **150** to docking station **100**. Other embodiments illustrating a cradle that may be integrated into support housing **114** are described with reference to FIGS. **5**A, **5**B, **6**A, **6**B, and **7**.

Electronic and electro-mechanical components that provide an interface between a marking device, an external computing device, and/or a power source may be installed in support housing **114**. For example, docking control electronics **128**, including a communications interface **122** and a power interface **126**, may be installed in support housing **114**. Communications interface **122** and power interface **126** may be the drive and buffer circuitry for supplying electrical signals and power, respectively, to cradle **118**, which in turn supplies electrical signals and power to marking device **150** when marking device **150** is attached to docking station **100**. In the embodiment of FIG. **1**, communications interface **122** provides a wired connection to control electronics in marking device **150**. In other embodiments, docking station **100** may include a wireless link to control electronics in marking device **150**. Docking station **100** may supply electrical signals and power to any configuration or embodiment of marking device **150**, and marking device **150** may receive electrical signals and power from any configuration or embodiment of docking station **100**.

Docking control electronics **128** may include a processor and other circuitry for managing and driving various user interface devices, such as, but not limited to, indicators **130**, manual controls **134**, and audio output **138**. Docking station **100** may include visible and/or audible means of informing the user of status changes and other conditions requiring attention. Further, docking station **100** may include user controls that allow a user to initiate activities, such as data synchronization (e.g., uploading and downloading data). For example, indicators **130** may include one or more light-emitting diode (LED) devices of specified colors and indicate a meaning to the user (e.g., red, green, and yellow battery status indicators; yellow and orange data synchronization status indicators, and the like). Manual controls **134** may include one or more manual push buttons for initiating various functions (e.g., an initiate data synchronization push button). Audio output **138** may be, for example, an audio speaker, an audio alarm and/or buzzer. Docking control electronics **128** may include an audio input (not shown). For example, an audio input, such as a microphone, may be incorporated into the docking station.

Docking control electronics **128** may also include a mechanism for short range identification, such as radio-frequency identification (RFID). For example, docking station **100** may include an RFID reader **129** for reading an RFID tag affixed to marking device **150**. In another embodiment, docking station **100** may include a barcode reader for reading a barcode affixed to marking device **150**.

The processor of docking control electronics **128** may be capable of managing data transfer between marking device **150** and an external computing device. For example, a wired connection **140**, such as a universal serial bus (USB) connection, RS232 connectors, RJ45 connectors, Ethernet, and any combination thereof may be provided between docking control electronics **128** of docking station **100** and an external computing device. Further, the processor of docking control electronics **128** may be programmable to perform any user-defined function, such as, but not limited to, executing a security function programmed to ensure that only authorized personnel may access and use marking device **150** and/or docking station **100**. Additionally, a wired power connection (not shown) may be provided for connecting docking station **100** to the power source of a vehicle in which it is installed. In this manner, the power source of a vehicle may in turn be used to charge the battery of marking device **150** coupled to the docking station **100**.

Additionally, as shown in FIG. **1**, a safety strap **142** for securing marking device **150** in docking station **100** may be attached to support housing **114** of docking station **100**. In one embodiment, a device, incorporated in safety strap **142**, is capable of conducting an electrical signal that may be detected by docking control electronics **128** to indicate whether safety strap **142** has been secured around marking device **150**. For example, a small tracer wire may be installed within safety strap **142**, which changes a logic state depending upon whether both ends or one end only is fastened to support housing **114**. As described below, docking station **100** may include additional or different locking and security devices.

Marking device **150** may be any marking device that has, for example, battery powered electronics incorporated therein for any functionality (e.g., global positioning system (GPS) technology, RFID technology, data storage devices, electronic actuator, electronic display, marking material

sensing technology, wired and/or wireless communications technology and the like). For example, marking device **150** may be a marking device as described in U.S. publication no. 2008-0228294-A1, published Sep. 18, 2008, filed Mar. 13, 2007, and entitled "Marking System and Method With Location and/or Time Tracking;" U.S. publication no. 2008-0245299-A1, published Oct. 9, 2008, filed Apr. 4, 2007, and entitled "Marking System and Method;" and U.S. publication no. 2009-0204238-A1, published Aug. 13, 2009, filed Feb. 2, 2009, and entitled "Electronically Controlled Marking Apparatus and Methods;" which are incorporated by reference herein in their entirety.

It will be understood that the docking stations described herein can be used with other marking devices, including but not limited to marking devices that have limited electronic capability and marking devices that have no electronic capability. In some embodiments, the docking station may be used for holding, storage and/or locking of the marking device, without electronic functionality. In addition, the docking station may be used for docking of a combination locate and marking device, which includes both locate and marking functions.

Marking device **150** may include a shaft **154**, a handle **158**, a marking dispenser holder **162**, an actuator **166**, control electronics **170**, at least one rechargeable battery **172** for powering control electronics **170**, a docking station interface **174**, and an RFID tag **178**. Rechargeable battery **172** may be a power source for the marking device **150**. Rechargeable batteries **172** may be, for example, rechargeable lithium ion batteries, which are sized according to the requirements of control electronics **170**. RFID tag **178** may store a unique identification code, which may be used to identify and track marking device **150**.

A marking dispenser **180** (e.g., an aerosol marking paint canister) may be installed in marking dispenser holder **162** of marking device **150** as illustrated. Actuator **166** may be an electrical/mechanical actuator for activating the marking material spray action of marking dispenser **180**.

Control electronics **170** may include, but is not limited to, a processor, GPS technology, RFID technology, data storage devices, electronic actuator, electronic display, marking material sensing technology and wired and/or wireless communications technology (e.g., an Intranet connection, Internet, Bluetooth® technology, Wi-Fi, Wi-Max, IEEE 802.11 technology, radio frequency (RF), Infrared Data Association (IrDA) compatible protocols, Local Area Networks (LAN), Wide Area Networks (WAN), Shared Wireless Access Protocol (SWAP), combinations thereof, and other types of wireless networking protocols).

Docking station interface **174** of the marking device **150** is a mechanism that is designed to fit the cradle **118** of docking station **100** so as to provide a mechanical and electrical connection therebetween. The physical dimensions and shape of docking station interface **174** of marking device **150** substantially correspond to the physical dimensions and shape of cradle **118** of docking station **100**. Furthermore, electrical inputs/outputs (I/Os) (e.g., signal, data, and power), integrated into docking station interface **174**, are designed to connect to their counterparts integrated in cradle **118** of docking station **100**. An example of docking station interface **174** of marking device **150** is described with reference to FIGS. **5**A, **5**B, **6**A, **6**B, and **7**.

FIG. **2** is a schematic diagram of marking device **150** attached to docking station **100**, according to embodiments of the invention. More specifically, FIG. **2** depicts marking device **150** resting and retained within a cavity of base **110** of docking station **100**. Docking station interface **174** of marking device **150** is engaged with cradle **118** of docking station **100**. Docking station **100** can be configured to dock marking device **150** either with or without marking dispenser **180** installed in marking device **150**. Safety strap **142** may be fastened around shaft **154** of marking device **150** to hold marking device **150** securely, so that the marking device remains mechanically and electrically coupled to docking station **100**.

The docking station **100** shown in FIGS. **1** and **2** and described above provides both mechanical and electronic docking of a marking device. In particular, the docking station **100** is mechanically coupled to the marking device **150** in the docked position and has docking station electronics **128** which communicate electronically with control electronics **170** in marking device **150**. It will be understood, however, that the docking station may have a variety of configurations within the scope of the present invention. Accordingly, in additional figures discussed below, generic examples of docking stations and/or marking devices may be indicated using different reference numerals than those used for similar components/features illustrated in FIGS. **1** and **2**.

Referring to FIG. **3**A, a block diagram of an electronic docking station **200** is shown. Docking station **200** includes docking control electronics coupled by an electronic connection **206** to a marking device **202**. Electronic connection **206** may be a wired connection, such as by a cable or electrical connector, or may be a wireless connection. Embodiments of docking control electronics for docking station **200** are described below. Docking station **200** may be connected to a computing device **204** via an electronic connection **208**, which may be a wired connection or a wireless connection. The computing device **204** may be an on-site computer, such as an in-vehicle computer, or may be a remote computer, such as a central office computer. Docking station **200** provides electronic support of marking device **202** and supports such functions as data storage and/or transfer, battery charging and diagnostics and calibration, for example. However, in the embodiment of FIG. **3**A, docking station **200** is not mechanically coupled to marking device **202** and does not provide mechanical support, storage or locking of marking device **202**. The physical configuration of docking station **200** may be an electronics enclosure or housing having suitable connectors, cables and/or antennas for communication with marking device **202** and computing device **204**, and optional user interface components as described below.

Referring to FIG. **3**B, a docking station **210** is mechanically and electronically coupled to a marking device **212**. An electronic connection **216** between docking station **210** and marking device **212** may be a wired connection, such as by a cable or electrical connector, or may be a wireless connection between docking station electronics and marking device electronics. Docking station **210** further includes a mechanical connection **217** to marking device **212**. Mechanical connection **217** may have a variety of configurations, including, but not limited to, a holder to support and retain marking device **212**, a locking mechanism that is mechanically or electronically controlled and/or a partial or complete enclosure for marking device **212**. The partial or complete enclosure for the marking device may provide security for the marking device and/or may protect the marking device against exposure to weather conditions. The docking station **210** may provide mechanical support for marking device **212** in any desired position, such as vertical or horizontal, for example, and may be fixed or mobile. Docking station **210** may include an electronic connection

218 to a computing device 214, which may be local or remote as described above in connection with computing device 204. Electronic connection 218 may be a wired connection or a wireless connection. The docking station 100 shown in FIGS. 1 and 2 may be of the type shown in FIG. 3B.

Referring to FIG. 3C, a docking station 220 is mechanically coupled to a marking device 222 by a mechanical connection 227. The mechanical connection between docking station 220 and marking device 222 may have any desired mechanical configuration, including but not limited to a holder to support and retain marking device 222 in a desired orientation, such as vertical or horizontal, a locking mechanism to secure marking device 222 to docking station 220 and/or a partial or complete enclosure for marking device 222. The partial or complete enclosure for the marking device may provide security for the marking device and/or may protect the marking device against exposure to weather conditions. In the embodiment of FIG. 3C, an electronic connection is not provided between docking station 220 and marking device 222. Instead, marking device 222 may communicate directly with a computing device 224 via an electronic connection 228, which may be a wired connection or a wireless connection. Computing device 224 may be a local computer, such as an in-vehicle computer or may be a remote computer, such as a central office computer. The physical configuration of docking station 220 may be similar to docking station 100 shown in FIGS. 1 and 2, with most or all electronic components omitted.

In each of FIGS. 3A, 3B and 3C, the electronic connection to the computing device is optional. The computing device may provide control of the docking station and may receive marking device data, such as data from electronic records of marking operations. The marking device data may be transferred by the docking station from the marking device directly to the computing device and/or may be stored in a local memory of the docking station. The data transfer may occur at the time of docking of the marking device or may occur at a later time, such as at the end of the day. In other embodiments, the electronic connection between the docking station and the computing device is omitted. For example, data can be transferred from the docking station to any desired computing device by use of a removable memory.

In the embodiments of FIGS. 3A, 3B and 3C, the docking station may provide a battery charging function for the marking device. Thus, for example, the docking station can be connected to a power source, such as an AC power source for fixed applications, or a DC source, such as vehicle power, for mobile applications. The docking station may include circuitry for charging batteries in the marking device. In other embodiments, a separate battery charger is connected directly to the marking device.

A block diagram of docking control electronics 250 in accordance with embodiments of the invention is shown in FIG. 4. Docking control electronics 250 may include components for managing the overall operation of the docking stations described herein. Docking control electronics 250 may include a communication interface 252 for communication with a marking device, a communication interface 254 for communication with a local or remote computing device, and a user interface 256 for interacting with a user by receiving user inputs and/or providing information to a user. Docking control electronics 250 may further include a timing system 260 for timing of docking station operations and events, a location tracking system 262 for determining geographical coordinates of the docking station and an ID reader 264 for reading an identification tag 265 on the marking device.

Docking control electronics 250 may further include a processor 266 and at least one memory 270. Memory 270 may be used for storage of control software and for data storage. It will be understood that memory 270 may be configured as one or more memories, such as separate memories for data storage and program storage. Memory 270 may include a data storage area 290 for storage of data transferred from the marking device and/or other data involved in operation of the docking station.

Docking control electronics 250 may further include a battery control circuit 272 which receives AC or DC power from an external power source 274 and performs charging of the battery of the marking device under control of processor 266.

In some embodiments, docking control electronics 250 may include a memory connector (not shown) to permit connection of a memory device, such as a memory device containing data from the marking device. In further embodiments, docking control electronics 250 may include a battery connector (not shown) to permit connection of one or more batteries from the marking device, for charging.

Control software, typically stored in memory 270, may include a communication control module 280 to control communication with the marking device and with the computing device, and a data transfer module 282 to perform data transfer to and between the marking device, a local memory and the computing device. The control software may further include a battery control module 284 to control battery charging and recording of battery information, a diagnostics module 286 to perform diagnostics and calibration of the marking device, as well as diagnostics of the docking station itself. The control software may further include a security module 288 that controls a locking mechanism and/or data transfer operations based on information including, but not limited to, a table of approved marking device IDs, allowed and prohibited geographical coordinates and/or allowed and prohibited times and dates.

Communication interface 252 may be any wired and/or wireless communication interface by which information may be exchanged between the docking station and a marking device. Similarly, communication interface 254 may be any wired and/or wireless communication interface by which information may be exchanged between the docking station and a local or remote computing device. Examples of wired communication interfaces may include, but are not limited to, USB ports, RS232 connectors, RJ45 connectors, Ethernet, and combinations thereof. Examples of wireless communication interfaces may include, but are not limited to, Bluetooth® Technology, Wi-Fi, Wi-Max, IEEE 802.11 Technology, Radio Frequency (RF), Local Area Networks (LAN) and Wide Area Networks (WAN), Internet, Shared Wireless Access Protocol (SWAP), Infrared Data Association (IrDS) compatible protocols and other types of wireless networking protocols, and combinations thereof.

User interface 256 may be any mechanism or combination of mechanisms by which the user may interact with the docking station. For example, user interface 256 may include, but is not limited to, a display (including integrated displays and external displays, such as Heads-Up Displays (HUDs)), a touch screen, one or more manual pushbuttons, one or more toggle switches, a keypad, and combinations thereof. In one example, the display includes one or more liquid crystal displays (LCD) or light-emitting diode (LED)

displays that are suitably small for use in a portable device yet suitably large for ease of viewing. User interface **256** may include standard zoom in and out controls for the display. In one example, a display includes a 4.3 inch diagonal LCD. Preferably, the display is at least 5 characters tall by 40 characters wide, is full-sun daylight readable and includes automatic backlighting for low light applications. In one implementation, the user interface **256** includes a "menu/on" button to power up the docking station and provide a menu-driven graphical user interface (GUI) displayed by the display device (e.g., menu items and/or icons displayed on the display device) and navigated by the technician via a joystick or a set of four "up/down/left/right" buttons, as well as a "select/ok" button to take some action pursuant to the selection of a menu item/icon. In further implementations, the user interface may include a microphone and the processor may be configured to accept and process audible commands, such that docking station operations may be accomplished via voice-activated commands by simply speaking into the microphone.

Additionally, user interface **256** may include one or more indicators such as, for example, LED indicators, audio devices, such as a speaker, a buzzer and/or an alarm, and combinations thereof. During normal usage of the docking station, the components of user interface **256** may be used to display, for example, the current status of the docking station, the current status of the docked marking device, alerts and notifications and option selections.

Timing system **260** may include an internal clock, such as a crystal oscillator device, for processor **266**. Additionally, timing system **260** may include a mechanism for registering time with a specified degree of accuracy, such as accuracy to the minute, second or millisecond. Timing system **260** may also include a mechanism for registering the calendar date. Using timing system **260**, a timestamp may be appended to any information that is handled by the docking station, such as for example marking device data, time of docking the marking device, time of undocking the marking device, time of battery charging, and the like. In some embodiments, timing system **260** may register the time and date using its internal clock. In other embodiments, timing system **260** may receive time and date information from location tracking system **262**. In further embodiments, timing system **260** may receive time and date information from an external timing system, such as a remote computer or network, via communication interface **254**.

Location tracking system **262** may include any device that can determine geographical coordinates to a specified degree of accuracy. For example, location tracking system **262** may include a Global Positioning System (GPS) receiver or a Global Navigation Satellite System (GNSS) receiver. A GPS receiver may provide, for example, any standard format data stream, such as a National Marine Electronics Association (NMEA) data stream. The location tracking system **262** may include an error correction component which may be a mechanism for improving the accuracy of the geographical coordinates provided by the location tracking system **262**. In one example, the error correction component may include an algorithm for correcting offsets, such as due to local disturbances in the atmosphere, in the geographical coordinates provided by location tracking system **262**. Using location tracking system **262**, geographical coordinates can be recorded and/or transmitted for any docking station operation or information.

In another embodiment, location tracking system **262** may include a device or mechanism that determines location such as by performing triangulation by the use of cellular telephone towers.

ID reader **264** includes a mechanism for short range identification of the ID tag **265** which may be affixed to the marking device. ID reader **264** may be a radio frequency identification (RFID) reader for reading an RFID tag affixed to the marking device. In another embodiment, ID reader **264** may include a barcode reader for reading a barcode tag affixed to the marking device. The ID reader **264** typically reads the ID tag **265** when the marking device is docked in the docking station.

Processor **266** may be any general purpose processor, controller or microcontroller device that is capable of managing the overall operations of the docking station as described herein. The processor **266** may include a single processing device or more than one processing device.

Memory **270** may comprise any computer-readable media and may store computer instructions for implementing the various functions described herein as well as any data associated with operation of the docking station. The processor **266** may be used to execute the stored instructions. Memory **270** may include volatile and/or non-volatile data storage media and/or data storage devices. For example, memory **270** may be, but is not limited to, a random access memory (RAM), a read-only memory (ROM) and/or a removable memory device, such as a USB flash memory.

As indicated above, communication control module **280** includes software for controlling communication interface **252** to communicate with the marking device and for controlling communication interface **254** to communicate with a local or remote computing device. The communication may be associated with any function of the docking station, including but not limited to data transfer, control of the marking device, battery charging, diagnostics and calibration, for example. As indicated above, the communication with the marking device may be by wired connection or may be wireless. Further, the communication with the computing device may be by wired connection or may be wireless.

Data transfer module **282** controls data transfer to and between the marking device, the docking station and the local or remote computing device. Marking device data may be transferred from the marking device to data storage **290** in memory **270** for later transfer to the computer device. In other embodiments, data transfer module **282** is configured to control data transfer between the marking device and the computing device without temporary storage in data storage **290**. In further embodiments, data transfer module **282** is configured to control data transfer from the docking station to the marking device. The data may be transferred to the marking device from data storage **290** and/or from the computing device. By way of example only, the data transferred to the marking device may define some or all parameters of a marking operation to be performed by the marking device.

In some embodiments, data transfer module **282** may be configured to provide data backup for the marking device. By copying marking device data to the local memory in the docking station and/or to the local or remote computing device at specified times, data integrity and data security are provided, even if the marking device is damaged, lost or stolen. For example, data can be copied from the marking device to the docking station upon completion of a marking operation or a part thereof, or at specified intervals.

Data transfer module **282** may ensure synchronization of data between the marking device and data storage **290** as described below. Data transfer module **282** may perform functions such as format conversion, data compression and the like, related to data communication. In some embodiments, data storage **290** may be a removable memory component, such as a USB flash memory, that is physically removed from the docking station and installed in the local or remote computing device for data transfer.

Battery control module **284** may control monitoring and charging of one or more batteries in the marking device by battery control circuit **272**. The battery control module **284** may determine the charge state of the one or more batteries in the marking device and, if necessary, initiate and control battery charging. The battery control module, in conjunction with timing system **260**, may be configured to record a date and time of battery charging. The battery control module **284**, in conjunction with location tracking system **262**, may be configured to record geographical coordinates of the battery charging operation. The battery control module **284** may be configured to determine and/or record various parameters of the one or more batteries in the marking device, including but not limited to battery quality and/or battery capacity.

Diagnostics module **286** may be configured to perform diagnostics of the marking device. In particular, diagnostics module **286** may place the marking device in a diagnostics mode and may execute a diagnostics routine on the marking device. The diagnostics routine may include sending stimulus signals to the marking device and receiving responses or lack thereof which indicate the operational state of the marking device. The diagnostics routine may test some or all of the components of the marking device.

Diagnostics module **286** may also perform calibration of one or more components of the marking device. For example, when a component of the marking device provides a response that does not meet specification, the component may be adjusted by appropriate signals sent by the diagnostics module **286** to meet specification.

Diagnostics module **286** may also be configured to perform self-diagnostics of the docking station. In this case, diagnostics module **286** may place the docking station in a diagnostics mode and may execute a diagnostics routine for testing some or all components of the docking station. The result of the diagnostics routine can be recorded and/or transmitted to the local or remote computing device.

The diagnostics module **286**, in conjunction with timing system **260**, may be configured to record a time and date when a diagnostics and/or calibration routine was performed. Diagnostics module **286**, in conjunction with location tracking system **262**, may be configured to record the geographical coordinates where a diagnostics and/or calibration routine was performed. The recording of diagnostics information may be important in establishing that the marking device and/or the docking station was functioning properly at a particular time and date and/or location.

Security module **288** may be configured to control various security components and functions of the docking station. In some embodiments, security module **288** may be configured to receive the ID of the marking device from ID reader **264** and compare the ID of the marking device with a list of approved marking device IDs. If the ID of the marking device does not match one of the approved marking device IDs in the list, operation of the docking station may be modified and/or terminated. For example, an alert can be generated by the docking station and/or an alert can be transmitted to the local or remote computing device. Furthermore, operations such as data transfer, battery charging and the like can be terminated when the ID of the marking device does not match an approved marking device ID.

In other embodiments, security module **288** may be configured to receive a user ID from user interface **256**, such as via a keypad or other input device, and compare the user ID with a list of approved user IDs. In the absence of a match between the user ID and one of the approved user IDs, operation of the docking station can be modified or terminated and an alert can be generated as described above.

In further embodiments, security module **288** may be configured to control a locking mechanism, such as a safety strap, a locking bar or other locking device. The locking mechanism may secure the marking device or may secure an enclosure for the marking device, such as for example a weatherproof enclosure. Thus, for example, security module **288** may be configured to maintain the locking mechanism in a locked state if the user ID does not match one of the approved user IDs. In further embodiments, security module **288** may be configured, in conjunction with timing system **260**, to maintain the locking mechanism in a locked state at specified times and dates, such as, for example, during nighttime, weekends and holidays. In further embodiments, security module **288** may be configured, in conjunction with location tracking system **262**, to maintain the locking mechanism in a locked state when the docking station is outside specified geographical coordinates, is at specified geographical coordinates, or is within specified geographical coordinates. The specified geographical coordinates may indicate a location or area where removal of the marking device from the docking station is not permitted.

In further embodiments, the security module **288** may be configured to generate a user alert or notification when a marking device is not present in the docking station. Presence or lack of presence of the marking device may be detected, for example, by a sensor switch. In other embodiments, the security module **288** may be configured to generate a user notification or alert when the marking device is present in the docking station but is not secured in the docking station, for example, the marking device is not properly positioned or the locking mechanism is not engaged. In further embodiments, security module **288** may be configured to respond to a security command from a local or remote computing device. The security command may cause the security module **288** to terminate operations, to engage any locking mechanism and/or to shut down, for example.

It will be understood that the above described components and functions of the docking station may be utilized separately or in any combination. Furthermore, various components of the docking control electronics **250** shown in FIG. **4** and described above may be omitted from the docking station, within the scope of the invention. As noted above, battery charging may be a separate function not included in the docking station. The docking station, for example, may not include ID reader **264**, timing system **260** and/or location tracking system **262** in particular applications and configurations. In some embodiments, the docking station may be controlled by the computing device, in which case, all or part of user interface **256** may be omitted. Depending on the configuration, various software modules may be omitted, and in other embodiments, additional software modules may be included in the docking station. As described above, some embodiments of the docking station may include minimal or no electronics, in which case the docking station serves as a holder for the marking device.

FIGS. **5**A and **5**B are top and side views, respectively, of a portion of docking station **100**. FIGS. **5**A and **5**B illustrate that cradle **118** is recessed into the upper end of support housing **114**. Additionally, a female alignment feature **310** is provided within cradle **118** and is recessed into support housing **114**. Male connector pins **314** are arranged within female alignment feature **310**, to which electrical signals and power are connected. The number, type, and arrangement of male connector pins **314** may vary according to the requirements of docking station **100** and/or the marking device **150** to be docked. Similarly, the dimensions of cradle **118** and female alignment feature **310** may vary according to the requirements of docking station **100** and/or the marking device **150** to be docked.

FIGS. **6**A and **6**B are side and bottom views, respectively, of a portion of marking device **150**. FIG. **7** is a side view of marking device **150** being attached to docking station **100**. Docking station interface **174** of marking device **150** is designed to fit into cradle **118** of docking station **100**. Accordingly, FIGS. **6**A and **6**B show that the geometry of docking station interface **174** is complementary to the geometry of cradle **118** of FIGS. **5**A and **5**B. For example, the body of docking station interface **174** is designed to fit within the recessed area of cradle **118**. Further, a male alignment feature **410** is integrated into docking station interface **174**. Male alignment feature **410** is designed to fit within the recessed female alignment feature **310** of cradle **118** shown in FIGS. **5**A and **5**B. A set of female connector pins **414** are arranged within male alignment feature **410**, to which electrical signals and power are connected. The number, type, and arrangement of female connector pins **414** may vary according to the requirements of marking device **150** and docking station **100**. Female connector pins **414** of marking device **150** are arranged to substantially align with the arrangement of male connector pins **314** of docking station **100**. As a result, when marking device **150** is attached to docking station **100**, male connector pins **314** fit into female connector pins **414** of marking device **150**, providing an electrical connection therebetween, as shown in FIG. **7**.

While FIGS. **5**A, **5**B, **6**A, and **6**B describe a pin and hole type of connection (e.g., male connector pins **314** fitting into female connector pins **414**) between docking station **100** and marking device **150**, this connection is exemplary. Those skilled in the art will recognize that any type of electrical connection mechanism may be used, such as, but not limited to, an induction coupling mechanism. In addition, the mechanical and electrical coupling between docking station **100** and marking device **150** can be at any convenient location on the two devices, with complementary elements on the two devices to facilitate coupling and decoupling. Furthermore, the mechanical and electrical coupling elements can be combined, as shown in FIGS. **5**A, **5**B, **6**A, **6**B and **7**, or can be separate coupling elements.

As illustrated in FIG. **7**, docking station interface **174** of marking device **150** fits into cradle **118** of docking station **100**. In particular, male alignment feature **410** of docking station interface **174** having female connector pins **414** is aligned with and fit into female alignment feature **310** of cradle **118** that has male connector pins **314**.

FIG. **8**A is a top view of an exemplary configuration incorporating docking station **100**. More specifically, FIG. **8**A is a top view of a configuration incorporating docking station **100** in a vehicle cab **600** of the type typically used in the field. Vehicle cab **600** may include both a driver seat **610** and a passenger seat **614**, which are facing a dash **618**. In this mounting configuration, docking station **100** may be mounted to the back wall of vehicle cab **600** (i.e., the wall opposite dash **618**) in a location that is substantially centralized between driver seat **610** and passenger seat **614** for ease of access. For example, docking station **100** may be secured to the back wall of vehicle cab **600** by use of security screws to prevent the unauthorized removal of docking station **100**. Docking station **100** is positioned to face the front (i.e., toward dash **618**) of vehicle cab **600** to allow for easy attachment and removal of marking device **150**.

Docking station **100** may be wired directly into a vehicle's power system. Docking station **100** thus receives power simultaneously with other vehicle components (when the key is in the accessory, power, start, or run position), and powers down upon vehicle power off. In one embodiment, the design and construction of docking station **100** provides a power line and a ground line. Both lines may be spliced into, for example, a restraint control module **622** that is typically located directly under passenger seat **614** of the vehicle. As a result, docking station **100** receives power when restraint control module **622** receives power. Docking station **100** provides a battery charging mechanism for marking device **150** via the combination of the vehicle power and docking control electronics **128**. In another embodiment, the docking station may charge the marking device at any time (including accessory, power, start, run or off positions), for example, at preset times before the beginning of a shift to ensure that the marking device is fully charged, or for a period of time after the vehicle is shut off at the end of a shift.

Additionally, FIG. **8**A shows an onboard computer **626** within vehicle cab **600**. Onboard computer **626** may be any computing device, such as, but not limited to, any laptop computer, handheld computer or onboard server that is capable of executing software applications related to operations of docking station **100** and marking device **150**. In particular, there may be a wired connection, such as wired connection **140**, between docking station **100** and onboard computer **626**. In an embodiment, onboard computer **626** communicates with marking device **150** via a wireless communication link when within range. Also, when marking device **150** is attached to docking station **100**, docking station **100** provides a wired communications link between onboard computer **626** and marking device **150**. The type of information that may be exchanged between onboard computer **626** and marking device **150** may include, but is not limited to, marking data, timing data, GPS data, RFID data, status data, health data, software, and firmware updates, diagnostics information, and the like.

FIG. **8**B is a top view of another embodiment incorporating docking station **100**. In this mounting configuration, docking station **100** may be securely fastened to the floor of vehicle cab **600** in place of a passenger seat. In an embodiment, docking station **100** is securely bolted to the floor of vehicle cab **600** using, for example, a set of existing passenger seat bolt holes **630** in the floor of vehicle cab **600**. Optionally, a mounting plate **634** may be provided at base **110** of docking station **100** for bolting to bolt holes **630**. As depicted in FIG. **8**B, a passenger seat is not present and restraint control module **622** may be located underneath the cab floor covering. As previously discussed, the power line and ground lines of docking station **100** may be spliced into restraint control module **622**. Additionally, a USB or similar connection may be provided between docking station **100** and onboard computer **626**. This mounting configuration allows docking station **100** to be installed without drilling additional holes in the floor of vehicle cab **600**. As a result, docking station **100** is positioned in place of the passenger

seat and may be oriented to allow easy access through the passenger door of vehicle cab **600**.

FIGS. **8**A and **8**B illustrate embodiments where the docking station is mounted within a vehicle cab. It will be understood that the docking station can be mounted in any convenient location in a vehicle. For example, docking station may be mounted in the bed of a truck, in the rear of a van, within a panel truck or trailer, or in any other desired location. Further, the docking station can retain the marking device in any desired orientation, such as vertical, horizontal or any other desired orientation. In addition, any number of docking stations can be mounted in a vehicle.

In some embodiments, the docking station may include a weatherproof enclosure for the marking device. The weatherproof enclosure may be beneficial, for example, when the docking station is exposed to the weather, such as in the bed of a truck. The weatherproof enclosure may also provide enhanced security and may include a locking mechanism.

FIG. **8**C is a functional block diagram of a network system **650** that includes the mobile docking station **100**. More specifically, network system **650** includes one or more mobile docking stations **100** and one or more associated marking devices **150**. Each mobile docking station **100** of network system **650** may be connected to onboard computer **626** of the vehicle in which it is installed, as shown in FIGS. **8**A and **8**B. In another embodiment, onboard computer **626** may be any on-site computer, and is not limited to a computer in a vehicle. Additionally, each onboard computer **626** or other on-site computer of network system **650** may be connected to a remote computing device, such as remote computer **654**. Remote computer **654** may be a centralized computer, such as a central server of, for example, the locate service provider.

In order to facilitate the network connection, each onboard computer **626** or other on-site computer includes a communication link **658**. Likewise, remote computer **654** includes a communication link **662**. Communication link **658** and communication link **662** may be any wired and/or wireless communication interface by which information may be exchanged. Examples of wired communication interfaces may include, but are not limited to, USB ports, RS232 connectors, RJ45 connectors, Ethernet, and any combinations thereof. Examples of wireless communication interfaces may include, but are not limited to, an Intranet connection, Internet, Bluetooth® technology, Wi-Fi, Wi-Max, IEEE 802.11 technology, radio frequency (RF), Infrared Data Association (IrDA) compatible protocols, Local Area Networks (LAN), Wide Area Networks (WAN), Shared Wireless Access Protocol (SWAP), combination thereof, and other types of wireless networking protocols. The wireless interface may be capable of capturing signals that reflect a user's intent. For example, the wireless interface may include a microphone that can capture a user's intent by capturing the user's audible commands. The wireless interface may also interact with a device that monitors a condition of the user, such as eye movement, brain activity, and/or heart rate.

FIG. **9** is a flow diagram of a method **700** of using a docking station according to embodiments of the invention. In particular, FIG. **9** is a flow diagram of method **700** of synchronizing the data of, for example, marking device **150** with a local or remote computer, such as onboard computer **626**, when detected in docking station **100**. Method **700** may include, but is not limited to, the following acts, which are not limited to any order.

In act **710**, the docking station receives power. For example, when docking station **100** is installed in a vehicle, as shown in FIGS. **8**A and **8**B, docking station **100** receives direct current (DC) power when the vehicle key is in the accessory, power, start, or run position.

In act **714**, it is determined whether a marking device **150** is present in the docking station **100**. For example, using software of onboard computer **626**, queries of docking station **100** may be performed in order to determine the presence or absence of marking device **150**. In one embodiment, onboard computer **626** may query the RFID reader of docking station **100** in order to determine whether RFID data is returned. More specifically, when marking device **150** is present in docking station **100**, RFID data is returned from its RFID tag **178** to onboard computer **626** by the RFID reader **129** of docking station **100**. By contrast, when marking device **150** is not present in docking station **100**, no RFID data is returned to onboard computer **626** from docking station **100**.

In another example, a logic state may be returned from docking control electronics **128**, depending upon whether an electrical connection exists between docking station **100** and marking device **150** (e.g., between male connector pins **314** of docking station **100** and female connector pins **414** of marking device **150**). This may be referred to as "docking pin awareness." Other methods of determining whether a marking device is present in the docking station are possible, such as pressure sensors and any number of other solutions. If it is determined that marking device **150** is present in docking station **100**, method **700** proceeds to act **718**. If it is determined that marking device **150** is not present in docking station **100**, method **700** ends.

In act **718**, it is determined whether a data synchronization operation is needed between the marking device and the local or remote computer. Data synchronization is the process by which the local or remote computer receives data that was not previously exchanged between the marking device and the local or remote computer. For example, using software of onboard computer **626**, it may be determined whether a data synchronization operation is needed between marking device **150** and onboard computer **626**. For example, onboard computer **626** interrogates the data (e.g., marking data, timing data, GPS data, RFID data, and the like) that may be stored on marking device **150** and checks a flag, such as a send/acknowledge flag, to determine whether a packet of data was transmitted and received successfully. When the expected flags are present, onboard computer **626** skips over that packet of data in order to avoid collecting duplicate data. Any data that was not successfully transmitted and/or received is transmitted from marking device **150** to onboard computer **626** (or remote computer via wireless communication) via the USB or similar connection between docking station **100** and onboard computer **626**. If it is determined that a data synchronization operation is needed, method **700** proceeds to act **722**. If it is determined that a data synchronization operation is not needed, method **700** ends.

In act **722**, a data synchronization operation is performed between the marking device **100** and the remote or local computer. For example, a data synchronization operation is performed between marking device **150** and onboard computer **626** via the USB connection between docking station **100** and onboard computer **626**. Once the data is synchronized, method **700** ends.

Referring again to method **700** of FIG. **9**, docking station **100** communicates with onboard computer **626** and, if appropriate, may begin synchronizing data immediately when marking device **150** is detected in docking station **100**. Alternatively, a manual control **134**, such as the "initiate data

synchronization" push button of docking station **100** allows the operator to manually perform synchronization at any time. Also, data synchronization may occur automatically upon the docking of the marking device.

A data synchronization operation is described above in connection with FIG. **9**. It will be understood that communication between docking station **100** and marking device **150** may include any control and/or data transfer function, including but not limited to issuing commands to marking device **150**, receiving status and other operating information from marking device **150**, downloading ticket information and other operating parameters, uploading information of any type, performing diagnostics, and the like.

FIG. **10** is a flow diagram of another method of using a docking station. In particular, FIG. **10** is a flow diagram of a method **800** of managing the indicators and/or manual controls of docking station **100** when a marking device, such as marking device **150**, is detected therein. Method **800** informs the user of status changes and other conditions that may require attention. Method **800** may include, but is not limited to, the following acts, which are not limited to the following order.

In act **810**, the docking station receives power. For example, when docking station **100** is installed in a vehicle, as shown in FIGS. **8**A and **8**B, docking station **100** receives DC power when the vehicle key is in the accessory, power, start, or run position.

In act **814**, it is determined whether a marking device is present in the docking station. For example, if it is determined that marking device **150** is not present in docking station **100**, method **800** proceeds to act **818**. If it is determined that marking device **150** is present in docking station **100**, method **800** proceeds to act **822**. The presence or absence of marking device **150** in docking station **100** may be determined as described above in connection with FIG. **9**.

In act **818**, indicators **130** are set to show that no marking device is present and certain manual controls are disabled. For example, a red battery status indicator and a red synchronization status indicator may be turned on, and the initiate data synchronization push button may be deactivated.

In act **822**, it is determined whether the power source, for example, a battery, of marking device **150** needs charging. For example, onboard computer **626** interrogates control electronics **170** of marking device **150** in order to determine the health status of rechargeable batteries **172**. If it is determined that rechargeable batteries **172** of marking device **150** do not need charging, method **800** proceeds to act **826**. If it is determined that rechargeable batteries **172** of marking device **150** do need charging, method **800** proceeds to act **830**.

In act **826**, an indicator **130** is set to show battery status=charged. For example, a green battery status indicator may be turned on. Method **800** proceeds to act **834**.

In act **830**, an indicator **130** is set to show battery status=charging. For example, a yellow battery status indicator may be turned on and caused to blink. Alternatively, in the case of total battery failure, a red battery failure indicator may be turned on in order to show a defective battery in marking device **150**.

In act **834**, it is determined whether a data synchronization operation is needed between the marking device and the local or remote computer. For example, if it is determined that a data synchronization operation is needed, method **800** proceeds to act **838**. However, if it is determined that a data synchronization operation is not needed, method **800** proceeds to act **850**. The need for a synchronization operation may be determined as described above in connection with FIG. **9**.

In act **838**, an indicator **130** is set to show synchronization is in progress. For example, an orange synchronization status indicator may be turned on and caused to blink. In act **842**, it is determined whether a data synchronization error condition is present. For example, onboard computer **626** determines whether a data synchronization error condition has been identified. If a data synchronization error condition is not present, method **800** returns to act **838**. If a data synchronization error condition is present, method **800** proceeds to act **846**.

In act **846**, an indicator **130** is set to show whether a data synchronization error condition is present. For example, a red synchronization error indicator may be turned on and caused to blink. In act **850**, it is determined whether the initiate data synchronization push button of docking station **100** has been pushed. For example, onboard computer **626** interrogates docking control electronics **128** of docking station **100** to determine the status thereof. If it is determined that the initiate data synchronization push button has been pushed, method **800** proceeds to act **838**. If it is determined that the initiate data synchronization push button has not been pushed, method **800** then proceeds to act **854**.

In act **854**, an indicator **130** is deactivated. For example, the orange synchronization status indicator may be turned off.

FIG. **11** is a schematic diagram of a marking device attached to a docking station. In particular, FIG. **11** depicts a side view of marking device **150** attached to docking station **100**. Docking station **100** further includes a locking mechanism **910**. In addition to safety strap **142**, marking device **150** may be lockable within a vehicle via the optional locking mechanism **910** of FIG. **11**. In one embodiment, locking mechanism **910** may be a suitably rigid, strong, and tamperproof bracket (e.g., hinged bracket) that is installed on support housing **114**. Locking mechanism **910** may include a switch or lever (not shown) to ensure that marking device **150** is properly secured within docking station **100** during driving (i.e., for safety) in the event of an accident, as well as to ensure proper charging and data transfer. A keyed lock, such as a padlock, may be used to secure marking device **150** against theft.

FIG. **12** is a flow diagram of a method of using a docking station. In particular, FIG. **12** illustrates a method **1000** of notifying the user of the presence and security of the marking device in docking station **100**. Method **1000** may provide an audible means of informing the user of the presence and security of marking device **150** in docking station **100**. Method **1000** may include, but is not limited to, the following acts, which are not limited to the following order.

In act **1010**, it is determined whether docking station **100** is receiving power. For example, when docking station **100** is installed in a vehicle, such as shown in FIGS. **8**A and **8**B, docking station **100** receives DC power when the vehicle key is in the accessory, power, start, or run position. If onboard computer **626** determines that vehicle power is present, method **1000** proceeds to act **1014**. If onboard computer **626** determines that vehicle power is not present, method **1000** ends.

In act **1014**, it is determined whether a marking device **150** is present within the docking station. For example, if it is determined that marking device **150** is not present in docking station **100**, method **1000** proceeds to act **1018**. If it is determined that marking device **150** is present in

docking station **100**, method **1000** proceeds to act **1022**. The presence or absence of marking device **150** in docking station **100** may be determined as described above in connection with FIG. **9**.

In act **1018**, an audible notification is generated to the user that the marking device **150** is absent from the docking station **100** within the vehicle. For example, a buzzer (via audio output **138** of docking station **100**) may be triggered until the vehicle is shut off or until marking device **150** is placed in docking station **100**. Thus, it may be ensured that the user returns marking device **150** to the vehicle after each use. Method **1000** then returns to act **1014**.

In act **1022**, it is determined whether the marking device is secure within the docking station **100**. For example, onboard computer **626** determines the status of safety strap **142** and/or the switch or lever of locking mechanism **910** in order to determine whether such items are in a secure state. If it is determined that marking device **150** is secure in docking station **100**, method **1000** ends. If it is determined that marking device **150** is not secure in docking station **100**, method **1000** proceeds to act **1026**.

In act **1026**, an audible notification is generated, indicating to the user that the marking device is not secure in docking station **100** within the vehicle. For example, a buzzer (via audio output **138** of docking station **100**) may be triggered until the vehicle is shut off or until marking device **150** is placed in docking station **100**. This ensures that marking device **150** is physically secure in the vehicle while the vehicle is moving. Method **1000** then returns to act **1022**.

FIG. **13** is a schematic diagram of an exemplary configuration incorporating docking stations. In particular, FIG. **13** is a schematic diagram of a bank of one or more docking stations **1100**, which may be fixed and suitable for use with at least one marking device. For example, FIG. **13** shows a home base facility **1110** at which a bank of docking stations **1100** are installed along a wall **1114**. In another configuration, the bank of docking stations **1100** may be installed on the floor or a table. Each docking station **1100** may be substantially the same as docking station **100** as depicted in FIGS. **1** through **12**, except that its power source may be designed and constructed to utilize an alternating current (AC) power source (e.g., an AC power source **1118**), instead of the DC power of a vehicle. A shielded power cord terminated in a three (3) prong plug may be used. The bank of docking stations **1100** may also be powered by direct current (DC) power sources. Like docking station **100**, each docking station **1100** allows a marking device, such as marking device **150**, to be attached and detached easily for charging and, where applicable, for data synchronization.

Each docking station **1100** is designed and constructed to be mounted against a fixed structure such as a wall. In addition, each docking station **1100** is designed and constructed of materials that prevent unauthorized removal thereof. The bottom of each docking station **1100** may be flat in order to allow for placement on the floor of a building or on a table. Each docking station **1100** may be affixed to the floor and/or wall using security screws to prevent the unauthorized removal of the docking station. A variety of attachment means may be used to affix docking stations **1100**. In addition, each docking station **1100** may be positioned to allow the easy attachment and removal of a marking device.

Docking station **100** and where applicable, docking station **1100**, may support the synchronization of the marking device to a local or remote computer, such as a remote computer **1122**, which may be, for example, a host server. This synchronization may be performed through the use of a USB cable. Upon attachment of the marking device, each docking station **1100** may determine whether or not data synchronization is necessary and, if it is, perform substantially the same data synchronization process that is shown in method **700** of FIG. **9** and described above.

The status indicators and device controls of each docking station **1100** may be substantially the same as those of docking station **100**. A method of managing the indicators and/or manual controls of each docking station **1100** may be substantially the same as method **800** of FIG. **10** for docking station **100**.

In another embodiment, each docking station **1100** may include a cleaning mechanism at the base thereof for cleaning any components that may be installed at the marking dispenser holder end of a marking device. An example of a cleaning mechanism may be a compact ultrasonic cleaning station that utilizes cleaning fluid, such as, but not limited to, isopropyl alcohol.

FIGS. **14**, **15**, and **16** are perspective views of another embodiment of the docking station according to the present invention. FIG. **14** depicts a docking station **1200** for docking a marking device **1250**. Docking station **1200** may be an example of another embodiment of both docking station **100** and docking station **1100**, which may be in a variety of locations in fixed or mobile configurations.

In this embodiment of the docking station, docking station **1200** may include a base **1210**, a support housing **1214**, and a cradle **1218**. The functions of base **1210**, support housing **1214**, and cradle **1218** are substantially the same as the functions of base **110**, support housing **114**, and cradle **118**, respectively, of FIGS. **1** through **13**. Docking station **1200** of FIGS. **14**, **15**, and **16** differs primarily from docking station **100** and docking station **1100** of FIGS. **1** through **13** in its physical attributes.

In this embodiment of the docking station, marking device **1250** may include a shaft **1254**, a handle **1258**, a marking dispenser holder **1262** and a docking station interface **1274**. The functions of shaft **1254**, handle **1258**, marking dispenser holder **1262**, and docking station interface **1274** are substantially the same as the functions of shaft **154**, handle **158**, marking dispenser holder **162** and docking station interface **174**, respectively, of FIGS. **1** through **13**. Marking device **1250** of FIGS. **14**, **15**, and **16** differs primarily from marking device **150** of FIGS. **1** through **13** in its physical attributes. In particular, in this embodiment, docking station interface **1274** is incorporated on the side of shaft **1254** that is opposite handle **1258**. By contrast and referring to FIG. **1**, docking station interface **174** of marking device **150** is incorporated on the same side of shaft **154** as handle **158**.

With reference to FIGS. **14** and **16**, respectively, marking device **1250** is shown separated from and attached to docking station **1200**. FIG. **15** shows further details of docking station **1200**. More specifically, FIG. **15** shows an alignment feature **1222** of cradle **1218** that provides the electrical and mechanical coupling to a corresponding alignment feature (not visible) of docking station interface **1274** of marking device **1250**.

Additional security features may be incorporated into the docking stations described herein (e.g., docking station **100**, docking station **1100** and docking station **1200**). For example, in addition to the physical locking mechanism, the docking stations may be equipped with a positive identification mechanism. This positive identification mechanism (not shown) is provided to ensure that the user is authorized to remove the marking device from the docking station. This mechanism may include biometric, RFID, passcode, or any

other means of positively identifying the user. For example, using intelligence that may be incorporated into docking stations, in order to unlock the marking device, the user may be prompted to provide input that validates that he/she is authorized to use the marking device. In the event that the proper credentials are supplied, the locking mechanism of the docking station releases the marking device to the user. If improper credentials are supplied, the docking station may enter a security lockdown mode, trigger a remote alert to a supervisor of the user, and/or trigger an audible or visible alarm indicating that it is not available for use.

In this embodiment, the docking stations may not allow the user to remove the marking device until positive identification, as explained above, has been provided. In this embodiment, the biometric, RFID, passcode or any other means shall be a feature of the docking stations and provide enhanced security to the physical locking measures (e.g., strap and padlock) already described.

In an embodiment and with regard to docking station **100**, an audible security alarm may be tied into existing vehicle alarms, such as an alarm that sounds when the key is left in the ignition when the user opens the door, when the lights are left on or when the user opens the door and so on. Alternatively, the vehicle may be disabled from starting if marking device **150** is not properly secured in docking station **100**.

In another embodiment and with regard to docking stations **1100** and **1200**, a supervisor of a user may view (e.g., using a graphical user interface (GUI) of remote computer **1122**) the status of docking stations **1100** and **1200**, such as whether a marking device **150** is present and properly secured or not.

The docking stations of the present invention (e.g., docking station **100**, docking station **1100**, and docking station **1200**) are not limited to use with a portable marking device. The docking stations may be suitable for use with other types of portable devices. In an embodiment, the docking stations described herein may accommodate and function with a locate device or similar instrument for detecting facilities. Moreover, the docking stations described herein may also accommodate and function with a combination marking and locate device.

FIG. **17** is a perspective view of a marking device docking station **1300** that has processing and communications capability. Docking station **1300** may be installed in, for example, a vehicle and is suitable for use in conjunction with a marking device, such as marking device **1350**. In other embodiments, docking station **1300** may be installed at a central facility, office or other fixed location. Thus, docking station **1300** may be mobile or fixed. Docking station **1300** may serve as a home base for storage of marking device **1350** and for charging the battery of marking device **1350**. Marking device **1350** is, for example, an electronic marking device. In one example, marking device **1350** may be based on the electronic marking devices that are described above in connection with marking device **150**.

Docking station **1300** may include a base **1310** and a body **1312**. Additionally, a cradle **1314** is integrated into the upper end of body **1312** (the end opposite base **1310**). Cradle **1314** provides a means to mechanically and electrically couple marking device **1350** to docking station **1300**. Base **1310**, body **1312**, and cradle **1314** may be made of any suitably strong, rigid, and lightweight material, such as, but not limited to, molded plastic and metal. Additionally, docking station **1300** may include a security mechanism **1316** for holding and securing marking device **1350** into cradle **1314** in a lockable manner. For example, security mechanism **1316** may be a flexible strap or a rigid bracket that may be placed around the body of marking device **1350** and secured with a locking mechanism (not shown) to docking station **1300**.

Docking station **1300** may also include control electronics for providing processing and communications capability to docking station **1300**. For example, docking station **1300** may include control electronics **1320** that includes a processing unit **1322**, a local memory **1324**, a communication interface **1326**, a presence detection mechanism **1328**, a security detection mechanism **1330**, and, optionally, a location tracking system **1332**.

Processing unit **1322** may include any standard controller or microprocessor device that is capable of executing program instructions. Local memory **1324** may be any data storage mechanism for storing any information that is processed locally at docking station **1300**. Processing unit **1322** and local memory **1324** may be used for managing the overall operations of docking station **1300**.

Communication interface **1326** may include any wired and/or wireless communication interface for connecting to a network (not shown) and by which information may be exchanged with other computing devices that may be separate from docking station **1300** and/or with other docking stations **1300**. Examples of wired communication interfaces may include, but are not limited to, USB ports, RS232 connectors, RJ45 connectors, Ethernet, and any combinations thereof. Examples of wireless communication interfaces may include, but are not limited to, an Intranet connection, Internet, Bluetooth® technology, Wi-Fi, WiMax, IEEE 802.11 technology, radio frequency (RF), Infrared Data Association (IrDA) compatible protocols, Local Area Networks (LAN), Wide Area Networks (WAN), Shared Wireless Access Protocol (SWAP), any combinations thereof, and other types of wireless networking protocols.

Presence detection mechanism **1328** may include any mechanism of control electronics **1320** that is capable of determining whether a marking device **1350** is present within cradle **1314**. In one example, presence detection mechanism **1328** may be a radio frequency identification (RFID) reader that is able to read, for example, an RFID tag **1334** that is affixed to marking device **1350**. When marking device **1350** is present in cradle **1314**, the RFID reader is able to read information (e.g., a marking device ID) from RFID tag **1334**, which indicates that marking device **1350** is present in docking station **1300**. However, when marking device **1350** is not present in cradle **1314**, the RFID reader is unable to read information from RFID tag **1334**, which indicates that marking device **1350** is not present in docking station **1300**.

In another example, presence detection mechanism **1328** may include circuitry for reading the state of a "presence signal," which may be an electronic signal that has one state (e.g., a logic high) when marking device **1350** is present and another state (e.g., a logic low) when marking device **1350** is not present. The "presence signal" may be generated based, for example, upon sensing an electrical connection (or not) between docking station **1300** and marking device **1350** at the interface of cradle **1314**.

Security detection mechanism **1330** may include any mechanism of control electronics **1320** that is capable of determining whether security mechanism **1316** is engaged around marking device **1350** and locked. For example, presence detection mechanism **1328** may include circuitry for reading the state of a "locked signal," which may be an electronic signal that has one state (e.g., a logic high) when

security mechanism **1316** is engaged and locked and another state (e.g., a logic low) when security mechanism **1316** is not engaged and locked.

In one example, the locking mechanism of security mechanism **1316** may include an electromagnetic locking mechanism (not shown) that may be engaged/disengaged by a user of docking station **1300**. In this example, the "locked signal" may be generated based upon sensing the state of the electromagnetic locking mechanism. In another example, the locking mechanism of security mechanism **1316** may include an electromechanical locking mechanism (not shown) that may be engaged/disengaged by a user of docking station **1300**. Again, the "locked signal" may be generated based upon sensing the state of the electromechanical locking mechanism.

Location tracking system **1332**, which is optional in docking station **1300**, may include any device that can determine its geographical location to a specified degree of accuracy. For example, location tracking system **1332** may include a global positioning system (GPS) receiver or a global navigation satellite system (GNSS) receiver. A GPS receiver may provide, for example, any standard format data stream, such as a National Marine Electronics Association (NMEA) data stream. Location tracking system **1332** may also include an error correction component (not shown), which may be any mechanism for improving the accuracy of the geo-location data.

With respect to docking station **1300** being a recharging station for one or more batteries (not shown) of marking device **1350**, docking station **1300** may include power management electronics **1340**. When marking device **1350** is present in docking station **1300**, power management electronics **1340** provides a standard battery charging function. Power management electronics **1340** is also able to communicate to control electronics **1320** the charging state of the one or more batteries of marking device **1350**, for example, 50% charged, 75% charged, and so on.

Optionally, receptacles may be integrated into base **1310** of docking station **1300** for accepting rechargeable batteries **1342**, which may be spare rechargeable batteries for use in marking device **1350**. In one example, FIG. **1** shows two receptacles for accepting two rechargeable batteries **1342**. When at least one rechargeable battery **1342** is present in base **1310**, power management electronics **1340** provides a standard battery charging function. Power management electronics **1340** is also able to communicate to control electronics **1320** the presence of and the charging state of any rechargeable batteries **1342**.

In operation, under the control of processing unit **1322**, any information acquired and/or generated by docking station **1300** may be stored in local memory **1324**. For example, information about the presence and security of marking device **1350** at docking station **1300** may be logged in local memory **1324**. Information about the charging state of the one or more batteries of marking device **1350** may be logged in local memory **1324**. Information about the charging state of any rechargeable batteries **1342** in base **1310** may be logged in local memory **1324**. The geo-location data from location tracking system **1332** may be logged in local memory **1324**, and the like.

Additionally, when marking device **1350** is present in docking station **1300**, any information about locate operations (hereafter called marking data) that is stored in marking device **1350** may be transferred from marking device **1350** to local memory **1324** of docking station **1300**.

With respect to any of the aforementioned information, whether originating from docking station **1300** or from marking device **1350**, communication interface **1326** may be used to exchange information between docking station **1300** and any other computing devices that may be separate from docking station **1300**. Additionally, communication interface **1326** may be used to exchange information between docking station **1300** and any other docking stations **1300**. Further, when, for example, marking device **1350** is in use in the field (i.e., not docked), communication interface **1326** may be used to exchange information wirelessly between docking station **1300** and marking device **1350**. Docking station **1300** may communicate information regardless of whether a marking device **1350** is present. Examples of marking device docking station configurations and networks are described with reference to FIGS. **18** through **21**.

FIG. **18** is a schematic diagram of a docking station network **1400**, which is one example of a docking station network. In this example, docking station network **1400** may include multiple fixed marking device docking stations **1300** in communication with a central computing device.

In particular, FIG. **18** shows a bank of one or more docking stations **1300**, which may be fixed and suitable for use with at least one marking device **1350** at, for example, a home base facility. The bank of docking stations **1300** may be floor-mounted along a wall **1410**, as shown in FIG. **18**. In another configuration, the bank of docking stations **1300** may be hung on a wall, free-standing on the floor, free-standing on a table, and any combinations thereof. In this configuration, the power source for each docking station **1300** may be designed and constructed to utilize an alternating current (AC) power source (e.g., an AC power source **1412**). For example, a shielded power cord terminated in a three (3) prong plug may be used. The bank of docking stations **1300** may also be powered by direct current (DC) power sources (not shown). Each docking station **1300** allows a marking device, such as marking device **1350**, to be attached and detached easily for charging and, where applicable, for data transfer.

In the configuration of docking station network **1400**, the one or more docking stations **1300** are in communication with a central computing device. The central computing device may be, for example, a central control panel **1414** and/or a central server **1416**. Docking stations **1300** may communicate with central control panel **1414** and/or central server **1416** via their respective communication interfaces **1326**. Further, the communication of each docking station **1300** may be managed by its processing unit **1322**. Central control panel **1414** and/or central server **1416** may be used to collect information from docking stations **1300**, such as, but not limited to, marking device presence information, marking device security information, marking device battery status information, spare battery status information, marking data of marking devices, and the like. The information returned from docking stations **1300** may be useful, for example, for monitoring marking device inventory, monitoring marking device battery status, monitoring marking device security, monitoring spare battery inventory and status, collecting marking data, and so on.

By way of example and referring again to FIG. **18**, by using the processing and communications capabilities of docking stations **1300***a* through **1300***g*, central control panel **1414** and/or central server **1416** may determine, log, and report the following.

no marking device **1350** is present in docking station **1300***a*, two rechargeable batteries **1342** are present in docking station **1300***a*, the first rechargeable battery **1342** is 100% charged, the second rechargeable battery **1342** is 100% charged;

no marking device **1350** is present in docking station **1300***b*, no rechargeable batteries **1342** are present in docking station **1300***b;*

no marking device **1350** is present in docking station **1300***c*, one rechargeable battery **1342** is present in docking station **1300***c*, the rechargeable battery **1342** is 78% charged;

a marking device **1350***d* is present in docking station **1300***d*, marking device **1350***d* is locked down and secure, the batteries of marking device **1350***d* are 100% charged, two rechargeable batteries **1342** are present in docking station **1300***d*, the first rechargeable battery **1342** is 100% charged, the second rechargeable battery **1342** is 100% charged;

a marking device **1350***e* is present in docking station **1300***e*, marking device **1350***e* is locked down and secure, the batteries of marking device **1350***e* are 67% charged, two rechargeable batteries **1342** are present in docking station **1300***e*, the first rechargeable battery **1342** is 82% charged, the second rechargeable battery **1342** is 74% charged;

no marking device **1350** is present in docking station **1300***f*, no rechargeable batteries **1342** are present in docking station **1300***f;*

a marking device **1350***g* is present in docking station **1300***g*, marking device **1350***g* is not locked down and secure, the batteries of marking device **1350***g* are 100% charged, two rechargeable batteries **1342** are present in docking station **1300***g*, the first rechargeable battery **1342** is 100% charged, the second rechargeable battery **1342** is 94% charged;

three of a possible seven marking devices **1350** are present and accounted for, two of the three present are fully charged, one of the three present is not fully charged; and

ten of a possible fourteen rechargeable batteries **1342** are present and accounted for, five of the ten present are fully charged, five of the ten present are not fully charged.

FIG. **19** is a schematic diagram of a docking station network **1500**, which is another example of a docking station network. In this example, docking station network **1500** may include multiple mobile marking device docking stations **1300** in the field and in communication with an onsite computing device. More specifically, FIG. **19** shows multiple vehicles **1510**, such as a vehicle **1510***a*, **1510***b*, and **1510***c*. Installed in each vehicle **1510** is a docking station **1300**. For example, installed in vehicles **1510***a*, **1510***b*, and **1510***c* are docking stations **1300***a*, **1300***b*, and **1300***c*, respectively. Vehicles **1510***a*, **1510***b*, and **1510***c* may be, for example, the vehicles of locate technicians that are dispatched to a jobsite in the field. Docking stations **1300***a*, **1300***b*, and **1300***c* are used to hold marking devices (not shown) in vehicles **1510***a*, **1510***b*, and **1510***c*. In this configuration, the power source for each docking station **1300** may be designed and constructed to utilize the DC power of a vehicle. Alternatively, instead of multiple docking stations **1300** in multiple vehicles **1510**, there may be multiple docking stations **1300** in a one vehicle **1510**.

In the configuration of docking station network **1510**, the one or more docking stations **1300** are in communication with a central computing device. In one example, the central computing device may be an onsite computer **1520**. Onsite computer **1520** may be any onsite computing device, such as, but not limited to, a laptop computer, a handheld computer, and a tablet device, that has network capability. In particular, onsite computer **1520** is capable of communicating with any docking stations **1300** within its range. In one example, onsite computer **1520** may be present in one of the vehicles **1510**.

As described with reference to FIG. **18**, by using the processing and communications capabilities of docking stations **1300***a*, **1300***b*, and **1300***c*, onsite computer **1520** may determine, log, and report, for example, marking device presence, marking device battery status, marking device security, spare battery presence and status, marking data from each marking device, and so on.

FIG. **20** is a schematic diagram of a docking station network **1600**, which is yet another example of a docking station network. In this example, docking station network **1600** may include multiple mobile marking device docking stations **1300** in the field and in communication with each other. Docking station network **1600** is substantially the same as docking station network **1500** of FIG. **19**, except that the multiple docking stations **1300** are communicating directly with each other instead of to a central computing device, such as onsite computer **1520** of FIG. **19**.

With respect to docking station network **1600**, any docking station **1300** may poll any other docking station **1300** to determine their status (i.e., peer-to-peer communication). This may be accomplished using communication interface **1326** of each docking station **1300**, which may have short range wireless communication capability, such as Bluetooth®.

The configuration of docking station network **1600** may be useful, for example, to implement certain protocols with respect to performing locate operations. In one example, a project ticket calls for two locate technicians. Therefore, two vehicles **1510** with two docking stations **1300** (holding two marking devices), respectively, are present at the jobsite. In this example, a software rule may be implemented that once the locate operation is complete, the marking devices **1350** must be present in the respective docking stations **1300** before any data from either marking device **1350** is processed and before the ticket can be classified as complete. In order to accomplish this, there is communication between the two docking stations **1300** as to the presence of their respective marking devices **1350** and no data can be transferred until both are present. This may be useful to ensure a complete set of data to accompany the completed project ticket (i.e., eliminating any chance of partial data). Further, this scenario may ensure the association of data of the two marking devices involved. Any removal of either marking device in the middle of data transfer is communicated between the two docking stations **1300**, which will stop data transfer of the remaining marking device.

FIG. **21** is a schematic diagram of a docking station network **1700**, which is still another example of a docking station network. In this example, docking station network **1700** may include at least one marking device docking station **1300** in communication with at least one marking device **1350**.

Docking station network **1700** is an example of using communication interface **1326** of docking station **1300** to exchange information wirelessly with a marking device **1350**. The configuration of docking station network **1700** may be useful, for example, to implement certain protocols with respect to performing locate operations. In one example, docking station **1300** may receive a message from an external system via, for example, onsite computer **1520** of FIG. **19**. This message is then flashed from docking station **1300** to its associated marking device **1350**. The user of marking device **1350** receives the message at his/her marking device **1350** and may respond accordingly.

In further embodiments, a docking station may be equipped with or otherwise communicatively coupled to a mobile/portable device (hereafter a "mobile device"), such

as a cellular phone or personal digital assistant (PDA), which are typically hand-sized or smaller. Such a mobile/portable device provides processing, electronic storage, electronic display, user interface, communication facilities and/or other functionality for the docking station. Communicative coupling of a mobile device with a docking station may allow the intelligence and/or various functionality of the mobile device to be used in place of, or in addition to, an onboard processor and/or other onboard components (e.g., such as those included in control electronics **128**, **250** or **1320**). The docking station communicatively coupled to a mobile/portable device may be configured for docking of a marking device or for docking of a combination locate and marking device. The docking station may be configured for mechanical and/or electronic docking of locating equipment.

More specifically, in some embodiments a mobile device may be employed to implement the various functionality discussed above in connection with the processor **266**, the memory **270**, the communication interfaces **252**, **254**, the power source **274**, the user interface **256**, and in some instances the timing system **260** and/or the location tracking system **262** of an exemplary docking station. To this end, the mobile device itself may include one or more of a processor, memory, communication interface, power source, user interface, timing system and/or location tracking system (e.g., to facilitate GPS-enabled functionality). In some exemplary implementations, the mobile device may provide essentially all of the processing and related functionality required to operate the docking station, while in other implementations the mobile device may provide only some portion of the overall functionality (e.g., a GPS-enabled mobile device may be employed primarily for obtaining geo-location data, but not necessarily relied on substantively for processing power and/or memory).

In yet other implementations, the mobile device may provide redundant, shared and/or backup functionality for the docking station to enhance robustness. For example, even though a docking station may include one or more of a processor, memory, communication interface, power source, user interface, timing system and/or location tracking system, a mobile device communicatively coupled to or otherwise integrated with the docking station may include one or more corresponding components to provide redundant, shared and/or backup components and functionality. Examples of enhanced robustness provided by redundant components and/or functionality of a mobile device include, but are not limited to: providing for data comparison to establish data integrity (e.g., validation of geo-location data by comparing data obtained by a location tracking system in the docking station to geo-location data provided by a mobile device equipped with its own location tracking system); calibration of various parameters; power for various components (e.g., a first power source of the docking station may be used to power/recharge a second power source of the mobile device, or vice versa); backup memory storage; backup communication interfaces; support for multiple different communication protocols, communication channels, and/or communication media.

In various examples, a mobile device may be mechanically and electronically coupled to a docking station via an appropriate mobile device cradle and/or connector, or otherwise integrated with or communicatively coupled to the docking station, so as to permit one or more electronic signals to be communicated between the mobile device and the docking station (e.g., one or more signals indicative of operation of the docking station may be supplied to the mobile device). In some implementations, a mobile device cradle may be appropriately configured such that one or more of a power connector and an I/O connector on the mobile device engage with one or more complimentary connectors on the mobile device cradle upon insertion/engagement of the mobile device in the mobile device cradle. The one or more complimentary connectors on the mobile device cradle in turn may be coupled to various signals provided by the docking station (e.g., to a docked marking device). Additionally, in some embodiments the mobile device cradle and/or the docking station itself may include a battery pack and/or any other power source for supplying power to and/or for assisting the battery of the mobile device while the mobile device is connected to the docking station. In one example, the local power pack may be used to prolong the battery life of the mobile device.

Various methods and apparatus for communicatively coupling mobile devices to locating equipment in accordance with the present invention may allow different brands and/or types of mobile devices to be physically secured to and/or electrically coupled to a docking station. In various implementations, a mobile device cradle integrated into a docking station may be mobile device-specific; i.e., the mobile device cradle may be particularly configured such that the size and/or connector positions are appropriate for a particular brand/model of mobile device. Alternatively, a universal mobile device cradle with an adjustable size and/or adjustable connector locations (e.g., sliding connectors along one or more sides of the cradle that may be mechanically locked in place) may be coupled to the docking station so as to accommodate a variety of different mobile devices. In other examples, a mobile device cradle may not require electrical connections integrated therein, and one or more signals provided by the docking station may be communicated to the mobile device, and vice-versa, via one or more wired connections (e.g., a cable or wire) or a wireless connection (e.g., a Bluetooth® connection). In yet other examples, the mobile device need not be physically secured to the docking station, but may be communicatively coupled to the docking station via one or more wired and/or wireless connections.

FIGS. **22**A through **22**D are perspective views of examples of mobile device-specific cradles **1612-1618** that may be integrated with (e.g., installed on) a docking station according to some embodiments. For purposes of the following discussion, docking station **1200** is illustrated in the figures as an exemplary docking station with which the mobile/portable device may be coupled/integrated. However, it should be appreciated that the concepts discussed below apply similarly to other docking stations. Furthermore, as noted above, it should be appreciated that in some implementations various components and/or functionality of the control electronics of the docking station may be provided, in whole or in part, by the mobile device engaged in the cradles **1612-1618**.

Device-specific cradles **1612-1618** may each be configured for holding a particular type of mobile device. The mobile device may be any mobile device that has at least a processing unit and a communication interface, and preferably a user interface mechanism. Examples of mobile devices include, but are not limited to, any of a wide variety of mobile phones, personal digital assistants (PDA), and/or any other personal communication and/or media devices, such as the iPod® Touch device.

In FIGS. **22**A through **22**D, each device-specific cradle may be associated with a certain brand and/or style of mobile device. For example, device-specific cradle **1612** of FIG. **22**A may be configured for holding a certain type of

mobile device **1630**; device-specific cradle **1614** of FIG. **22**B may be configured for holding a different type of mobile device **1632**; and device-specific cradle **1616** of FIG. **22**C may be configured for holding yet another type of mobile device **1634**. Once a mobile device is inserted in its corresponding device-specific cradle on the docking station, its processing capabilities, user interface capabilities, communication capabilities, data storage capabilities, and/or any other capabilities may be used in combination with components of the docking station to perform various functions discussed elsewhere herein.

Each device-specific cradle may be electrically coupled to one or more components of the docking station. To this end, each device-specific cradle may include an input/output (I/O) connector for electrically connecting to its corresponding mobile device when the mobile device is secured within its device-specific cradle. Alternatively, a wireless communication link may be provided between the docking station and the mobile device that is secured within its device-specific cradle.

FIGS. **23**A and **23**B are perspective views of an example of a mobile device universal cradle **1640** that may be integrated with (e.g., installed on) a docking station. Universal cradle **1640** may include adjustable elements **1642** that allow substantially any size, brand, and/or style of mobile device to be secured therein. Because the locations and types of I/O connectors on mobile devices may differ from one brand and/or style of mobile device to another, in one aspect a docking station having a universal cradle **1640** may utilize a cable, such as cable **1650**, to facilitate the electrical connection between the docking station and the mobile device. The cable may be configured to provide an electrical connection between an I/O connector type of the docking station and a device-specific I/O connector type of the mobile device. In one example, cable **1650** may include a standard universal serial bus (USB) connector at one end for connecting the cable **1650** to the docking station and a device-specific connector at the opposite end for connecting the cable **1650** to mobile device **1652**.

FIG. **23**A shows an empty universal cradle **1640**, without a mobile device secured therein. FIG. **23**B shows universal cradle **1640** with a mobile device (e.g., mobile device **1652**) secured therein by, for example, adjustable elements **1642** being squeezed against the sides of mobile device **1652**. FIG. **23**B also shows cable **1650** plugged into mobile device **1652**, such that the docking station and the mobile device **1652** are electrically connected.

Again, once a mobile device is installed in universal cradle **1640** on the docking station, its processing capabilities, user interface capabilities, communication capabilities, data storage capabilities, and/or any other capabilities may be used in combination with components of the docking station to perform various functions discussed elsewhere herein. As noted above, the mobile device may provide essentially all of the processing and related functionality required to operate the docking station, or may provide only a portion of the overall functionality. Also, the mobile device may provide redundant, shared and/or backup functionality for the docking station to enhance robustness.

In some embodiments, any mobile device-specific cradles and/or universal cradles provided in connection with the docking station may be removable, replaceable and/or exchangeable. For example, the mobile device-specific cradles **1612-1618** and/or universal cradle **1640** may be removed from the docking station and then reattached as desired.

In other embodiments, a mobile device may be connected to a docking station through mechanisms requiring less external hardware to be attached to the docking station. For example, FIGS. **24**A and **24**B are perspective views of a slot, pocket, and/or pouch in a docking station for holding mobile devices. In one example, FIG. **24**A shows a slot **1670** integrated into docking station **1200** into which a mobile device, such as mobile device **1672**, may be inserted. An electrical connection (not shown) may be integrated into a portion of slot **1670** (e.g., along one or more sides and/or the bottom of slot **1670**) for connecting to mobile device **1672**.

In another example, FIG. **24**B shows a holder **1680** that is secured, for example, to the side of the docking station **1200**. A mobile device, such as mobile device **1672**, may be inserted into holder **1680**. Holder **1680** may be ruggedized for protection of mobile device **1672** and/or may be sealable for weatherproof operation. A cable (not shown), such as cable **1650** of FIGS. **23**A and **23**B, may pass through the walls or through the seal of holder **1680** for providing an electrical connection between the docking station **1200** and mobile device **1672**.

When a cable, such as cable **1650**, is to be used to facilitate a connection between a mobile device and a docking station, as shown for example in FIGS. **23**A, **23**B and **24**B, the cable may be configured to provide a connection between the I/O connector type of the docking station and the device-specific I/O connector type of the mobile device. For example, the cable may be in the form of a phone adaptor, with one end configured to connect to the I/O connector of the docking station, and the other end configured to connect to the I/O connector of a specific type of mobile device. FIG. **25** illustrates perspective views of examples of device-specific phone adaptors **1710** for use in facilitating wired communication with a docking station.

Docking station **1200** may include a standard I/O connector **1720** into which any phone adaptor **1710** may be plugged. For example, each phone adaptor **1710**, such as phone adaptor **1722**, **1724**, or **1726**, may include a standard I/O connector **1730** that is the counterpart to I/O connector **1720** of the docking station. For example, if I/O connector **1720** of the docking station is a male I/O connector, I/O connector **1730** of phone adaptor **1710** can be a corresponding female I/O connector. Conversely, if I/O connector **1720** of the docking station is a female I/O connector, I/O connector **1730** of phone adaptor **1710** can be a corresponding male I/O connector.

In a specific example, phone adaptor **1710** may be a USB-based adaptor; i.e., I/O connector **1720** on the docking station, may be a standard USB port and I/O connector **1730** of phone adaptor **1710** may be a USB connector.

At the other end of phone adaptor **1710**, an I/O connector may be configured to connect with a certain type of mobile device. For example, phone adaptor **1722** may include a device-specific I/O connector **1740** for connecting to a certain brand and/or style of mobile device (not shown). Phone adaptor **1724** may include a device-specific I/O connector **1742** for connecting to a different brand and/or style of mobile device (not shown). Phone adaptor **1726** may include a device-specific I/O connector **1744** for connecting to a yet another brand and/or style of mobile device (not shown).

Alternatively, wired communication may be complemented or replaced with any of various forms of wireless communication between a mobile device and a docking station. For example, FIG. **26** illustrates a user-worn mobile device **1760** that is in communication with docking station **1200**. The docking station **1200** may include a communica-

tion interface **1762**, which may be any wired and/or wireless communication interface, as described above. FIG. **26** also shows a locate technician **1770** having a belt-worn mobile device, such as mobile device **1760**. That is, mobile device **1760** may be installed in a standard belt-worn holster. In this example, mobile device **1760** may communicate with the docking station via, for example, Wi-Fi communication, such as Bluetooth® communication. In various implementations, the control electronics of the docking station may or may not include processor, memory and/or user-interface components; if any of these are included, similar components of the mobile device **1760** nonetheless may provide advantageous redundancy (e.g., for convenience of the technician **1770**).

Any mobile device used in connection with a docking station, and optionally the docking station itself, may include a communication interface. For example, the communication interfaces of the mobile device and the docking station may be any wired and/or wireless communication interface by which information may be exchanged. Examples of wired communication interfaces may include, but are not limited to, USB ports, RS232 connectors, RJ45 connectors, Ethernet, and any combinations thereof. Examples of wireless communication interfaces may include, but are not limited to, an Intranet connection, Internet, Bluetooth® technology, Wi-Fi, Wi-Max, IEEE 802.11 technology, radio frequency (RF), Infrared Data Association (IrDA) compatible protocols, Local Area Networks (LAN), Wide Area Networks (WAN), Shared Wireless Access Protocol (SWAP), any combinations thereof, and other types of wireless networking protocols.

It should be understood that the foregoing figures and descriptions illustrate non-limiting examples, and any suitable mechanism may be used for securing a mobile device to a docking station and for establishing a communication link. Additionally, any mechanism for holding a mobile device may be ruggedized and/or weatherproof.

With reference again to FIG. **4**, a mobile device used in connection with docking station **1200** or another docking station may be appropriately programmed to log and generate electronic records of various marking information, which records may be formatted in various manners, processed and/or analyzed on the mobile device, and/or transmitted to another device (e.g., a remote computer/server) for storage, processing and/or analysis. In one example, one or more pieces of geo-location data (e.g., from a GPS receiver, which may be integrated with the mobile device) may be collected and logged on the mobile device per actuation of a marking device (e.g., a trigger-pull to dispense marking material) in response to receipt by the mobile device of marking information. Furthermore, a computer-generated image or other visual representation of the marking operation may be electronically rendered in a display field of the mobile device based on logged marking information, essentially in real time as the marking operation is performed, and/or recreated thereafter based on one or more stored electronic records. Various algorithms according to the concepts discussed herein may be available as "applications" that may be downloaded to the mobile device and selectable/operable from the user interface of the mobile device, such that the mobile device may also be used for other (more conventional) functions (e.g., telephone calls, email, web access/browsing, etc.) in addition to specific functionality pursuant to execution of docking station applications.

FIGS. **22A-26** and the corresponding portions of the specification describe embodiments wherein a mobile computing device is communicatively coupled to a docking station. The docking station may be configured for mechanical and/or electronic docking of locating equipment, such as a marking device or a combination locate and marking device. In further embodiments, the mobile computing device itself serves as a docking station and performs one or more functions associated with operation of the marking device. In these embodiments, the mobile computing device is communicatively coupled to the marking device.

Referring to FIG. **27**, a system including marking device **1250** and a mobile computing device **1800** is shown. Mobile computing device **1800** is communicatively coupled to marking device **1250** by a cable **1810**. In other embodiments, mobile device **1800** may utilize wireless communication with marking device **1250**. In further embodiments, the system includes a marking device or a combination locate and marking device having electronic capabilities.

Mobile device **1800** may be programmed to perform one or more functions of a docking station. For example, the mobile computing device **1800** may transfer data, including but not limited to marking information, to and from the marking device, may log data received from the marking device in a memory of the mobile computing device **1800**, may process and/or analyze the data received from the marking device, may communicate with a remote computing device, including transfer of data to and from the remote computing device, may perform data synchronization between the mobile computing device **1800** and the marking device **1250**, may serve as a terminal for user control of the marking device **1250**, may display marking device information, such as for example status and job information, may record a date and time of marking device operations, may record geographical coordinates, may execute a diagnostics routine for testing of the marking device, may execute a calibration routine for calibration of the marking device, may determine a charge state of the battery in the marking device, may determine and verify an identity of the marking device, and/or may perform any other function associated with the marking device. These embodiments enable the mobile computing device to function as a docking station, without the mechanical docking function described above. The mobile computing device **1800** may be programmed to perform one or more of the functions described above and to thereby function as a docking station. It will be understood that any of the mobile devices described herein, including but not limited to mobile devices **1630**, **1632**, **1634**, **1652**, **1672**, **1760** and **1800**, may be programmed to perform one or more of the functions described above. Examples of mobile devices, such as cellular phones/PDAs, that are suitable for purposes of embodiments using such mobile devices in connection with docking stations include, but are not limited to, various models of the Apple iPhone (e.g., iPhone 3G S), various models of Blackberry® PDAs, various models of Windows® mobile phones by different manufacturers, and various Android-based devices ("Android" is a mobile operating system running on the Linux kernel; it was initially developed by Google and later the Open Handset Alliance and allows developers to write managed code in the Java language, controlling the device via Google-developed Java libraries) available from a variety of conventional mobile device suppliers (e.g., Motorola, Samsung, Sony-Ericsson). The connector for most Android-based devices typically is a standard micro USB connector. Connectors for other cellular phone/PDAs noted above may have various proprietary formats/pin layouts; an exemplary pin layout for an Apple iPhone is given in the following table (back side of dock connector; 2 4 6 8 10 12 14 16 18 20 22 24 26 28 30; 1 3 5 7 9 11 13 15 17 19 21 23 25 27 29; Pins 1,2 connected on motherboard; Pins 15,16 connected on motherboard; Pins 19,20 connected on motherboard; Pins 29,30 connected on motherboard):

Pin	Signal	Description
1	GND	Ground (–), internaly connected with Pin 2 on iPod motherboard
2	GND	Audio & Video ground (–), internaly connected with Pin 2 on iPod motherboard
3	Right	Line Out - R (+) (Audio output, right channel)
4	Left	Line Out - L(+) (Audio output, left channel)
5	Right In	Line In - R (+)
6	Left In	Line In - L (+)
8	Video Out	Composite video output (only when slideshow active on iPod Photo)
9	S-Video Chrominance output	For iPod Color, Photo only
10	S-Video Luminance output	For iPod Color, Photo only
11	GND	Serial GND
12	Tx	ipod sending line, Serial TxD
13	Rx	ipod receiving line, Serial RxD
14	RSVD	Reserved
15	GND	Ground (–), internaly connected with pin 16 on iPod motherboard
16	GND	USB GND (–), internaly connected with pin 15 on iPod motherboard
17	RSVD	Reserved
18	3.3 V	3.3 V Power (+) Stepped up to provide +5 VDC to USB on iPod Camera Connector. If iPod is put to sleep while Camera Connector is present, +5 VDC at this pin slowly drains back to 0 VDC.
19, 20	+12 V	Firewire Power 12 VDC (+)
21	Accessory Indicator/Serial enable	Different resistances indicate accessory type: 1 kOhm - iPod docking station, beeps when connected 10 kOhm - Takes some iPods into photo import mode 68 kOhm - makes iPhone 3g send audio through line-out without any messages 500 kOhm - related to serial communication/used to enable serial communications Used in Dension Ice Link Plus car interface 1 MOhm - Belkin auto adaptor, iPod shuts down automatically when power disconnected Connecting pin 21 to ground with a 1 MOhm resistor does stop the ipod when power (i.e. Firewire-12 V) is cut. Looks to be that when this pin is grounded it closes a switch so that on loss of power the Ipod shuts off. Dock has the same Resister.
22	TPA (–)	FireWire Data TPA (–)
23	5 VDC (+)	USB Power 5 VDC (+)
24	TPA (+)	FireWire Data TPA (+)
25	Data (–)	USB Data (–)
26	TPB (–)	FireWire Data TPB (–)
27	Data (+)	USB Data (+) Pins 25 and 27 may be used in different manner. To force the iPod 5G to charge in any case, when "USB Power 5 VDC" (pin 23) is fed, 25 must be connected to 5 V through a 10 kOhm resistor, and 27 must be connected to the Ground (for example: pin 1) with a 10 kOhm resistor. iPod 5G can also be forced to charge by attaching the data + and the data – pins to the 5 v via a 10k Ohm resistor (BOTH PINS) and connecting pin 16 to the 5 v (ground). (Confirmed working with iPod 5G 20 GB) To charge an iPhone 3G/iPod Touch 2nd gen, usb data– (25) should be at 2.8 v, usb data+(27) should be at 2.0 v. This can be done with a few simple resistors: 33k to +5 v (23) and 22k to gnd(16) to obtain 2 v and 33k to +5 v and 47k to gnd to obtain 2.8 v. This is a "notification" to the iphone that it is connected to the external charger and may drain amps from the usb.
28	TPB (+)	FireWire Data TPB (+)
29, 30	GND	FireWire Ground (–)

While various inventive embodiments have been described and illustrated herein, those of ordinary skill in the art will readily envision a variety of other means and/or structures for performing the function and/or obtaining the results and/or one or more of the advantages described herein, and each of such variations and/or modifications is deemed to be within the scope of the inventive embodiments described herein. More generally, those skilled in the art will readily appreciate that all parameters, dimensions, materials, and configurations described herein are meant to be exemplary and that the actual parameters, dimensions, materials, and/or configurations will depend upon the specific application or applications for which the inventive teachings is/are used. Those skilled in the art will recognize, or be able

to ascertain using no more than routine experimentation, many equivalents to the specific inventive embodiments described herein. It is, therefore, to be understood that the foregoing embodiments are presented by way of example only and that, within the scope of the appended claims and equivalents thereto, inventive embodiments may be practiced otherwise than as specifically described and claimed. Inventive embodiments of the present disclosure are directed to each individual feature, system, article, material, kit, and/or method described herein. In addition, any combination of two or more such features, systems, articles, materials, kits, and/or methods, if such features, systems, articles, materials, kits, and/or methods are not mutually inconsistent, is included within the inventive scope of the present disclosure.

The above-described embodiments can be implemented in any of numerous ways. For example, the embodiments may be implemented using hardware, software or a combination thereof. When implemented in software, the software code can be executed on any suitable processor or collection of processors, whether provided in a single computer or distributed among multiple computers.

Further, it should be appreciated that a computer may be embodied in any of a number of forms, such as a rack-mounted computer, a desktop computer, a laptop computer, or a tablet computer. Additionally, a computer may be embedded in a device not generally regarded as a computer but with suitable processing capabilities, including a Personal Digital Assistant (PDA), a smart phone or any other suitable portable or fixed electronic device.

Also, a computer may have one or more input and output devices. These devices can be used, among other things, to present a user interface. Examples of output devices that can be used to provide a user interface include printers or display screens for visual presentation of output and speakers or other sound generating devices for audible presentation of output. Examples of input devices that can be used for a user interface include keyboards, and pointing devices, such as mice, touch pads, and digitizing tablets. As another example, a computer may receive input information through speech recognition or in other audible format.

Such computers may be interconnected by one or more networks in any suitable form, including a local area network or a wide area network, such as an enterprise network, and intelligent network (IN) or the Internet. Such networks may be based on any suitable technology and may operate according to any suitable protocol and may include wireless networks, wired networks or fiber optic networks.

A computer/computing device employed to implement various functionality described herein according to various embodiments may comprise a memory, one or more processing units (also referred to herein simply as "processors"), one or more communication interfaces, one or more display units, and one or more user input devices. The memory may comprise any computer-readable media, and may store computer instructions (also referred to herein as "processor-executable instructions") for implementing the various functionalities described herein. The processing unit(s) may be used to execute the instructions. The communication interface(s) may be coupled to a wired or wireless network, bus, or other communication means and may therefore allow the computer to transmit communications to and/or receive communications from other devices. The display unit(s) may be provided, for example, to allow a user to view various information in connection with execution of the instructions. The user input device(s) may be provided, for example, to allow the user to make manual adjustments, make selections, enter data or various other information, and/or interact in any of a variety of manners with the processor during execution of the instructions.

The various methods or processes outlined herein may be coded as software that is executable on one or more processors that employ any one of a variety of operating systems or platforms. Additionally, such software may be written using any of a number of suitable programming languages and/or programming or scripting tools, and also may be compiled as executable machine language code or intermediate code that is executed on a framework or virtual machine.

In this respect, various inventive concepts may be embodied as a computer readable storage medium (or multiple computer readable storage media) (e.g., a computer memory, one or more floppy discs, compact discs, optical discs, magnetic tapes, flash memories, circuit configurations in Field Programmable Gate Arrays or other semiconductor devices, or other non-transitory medium or tangible computer storage medium) encoded with one or more programs that, when executed on one or more computers or other processors, perform methods that implement the various embodiments of the invention discussed above. The computer readable medium or media can be transportable, such that the program or programs stored thereon can be loaded onto one or more different computers or other processors to implement various aspects of the present invention as discussed above.

The terms "program" or "software" are used herein in a generic sense to refer to any type of computer code or set of computer-executable instructions that can be employed to program a computer or other processor to implement various aspects of embodiments as discussed above. Additionally, it should be appreciated that according to one aspect, one or more computer programs that when executed perform methods of the present invention need not reside on a single computer or processor, but may be distributed in a modular fashion amongst a number of different computers or processors to implement various aspects of the present invention.

Computer-executable instructions may be in many forms, such as program modules, executed by one or more computers or other devices. Generally, program modules include routines, programs, objects, components, data structures, etc. that perform particular tasks or implement particular abstract data types. Typically the functionality of the program modules may be combined or distributed as desired in various embodiments.

Also, data structures may be stored in computer-readable media in any suitable form. For simplicity of illustration, data structures may be shown to have fields that are related through location in the data structure. Such relationships may likewise be achieved by assigning storage for the fields with locations in a computer-readable medium that convey relationship between the fields. However, any suitable mechanism may be used to establish a relationship between information in fields of a data structure, including through the use of pointers, tags or other mechanisms that establish relationship between data elements.

Also, various inventive concepts may be embodied as one or more methods, of which an example has been provided. The acts performed as part of the method may be ordered in any suitable way. Accordingly, embodiments may be constructed in which acts are performed in an order different than illustrated, which may include performing some acts simultaneously, even though shown as sequential acts in illustrative embodiments.

All definitions, as defined and used herein, should be understood to control over dictionary definitions, definitions in documents incorporated by reference, and/or ordinary meanings of the defined terms.

The indefinite articles "a" and "an," as used herein in the specification and in the claims, unless clearly indicated to the contrary, should be understood to mean "at least one."

The phrase "and/or," as used herein in the specification and in the claims, should be understood to mean "either or both" of the elements so conjoined, i.e., elements that are conjunctively present in some cases and disjunctively present in other cases. Multiple elements listed with "and/or" should be construed in the same fashion, i.e., "one or more" of the elements so conjoined. Other elements may optionally be present other than the elements specifically identified by the "and/or" clause, whether related or unrelated to those elements specifically identified. Thus, as a non-limiting example, a reference to "A and/or B", when used in conjunction with open-ended language such as "comprising" can refer, in one embodiment, to A only (optionally including elements other than B); in another embodiment, to B only (optionally including elements other than A); in yet another embodiment, to both A and B (optionally including other elements); etc.

As used herein in the specification and in the claims, "or" should be understood to have the same meaning as "and/or" as defined above. For example, when separating items in a list, "or" or "and/or" shall be interpreted as being inclusive, i.e., the inclusion of at least one, but also including more than one, of a number or list of elements, and, optionally, additional unlisted items. Only terms clearly indicated to the contrary, such as "only one of" or "exactly one of," or, when used in the claims, "consisting of," will refer to the inclusion of exactly one element of a number or list of elements. In general, the term "or" as used herein shall only be interpreted as indicating exclusive alternatives (i.e. "one or the other but not both") when preceded by terms of exclusivity, such as "either," "one of," "only one of," or "exactly one of" "Consisting essentially of," when used in the claims, shall have its ordinary meaning as used in the field of patent law.

As used herein in the specification and in the claims, the phrase "at least one," in reference to a list of one or more elements, should be understood to mean at least one element selected from any one or more of the elements in the list of elements, but not necessarily including at least one of each and every element specifically listed within the list of elements and not excluding any combinations of elements in the list of elements. This definition also allows that elements may optionally be present other than the elements specifically identified within the list of elements to which the phrase "at least one" refers, whether related or unrelated to those elements specifically identified. Thus, as a non-limiting example, "at least one of A and B" (or, equivalently, "at least one of A or B," or, equivalently "at least one of A and/or B") can refer, in one embodiment, to at least one, optionally including more than one, A, with no B present (and optionally including elements other than B); in another embodiment, to at least one, optionally including more than one, B, with no A present (and optionally including elements other than A); in yet another embodiment, to at least one, optionally including more than one, A, and at least one, optionally including more than one, B (and optionally including other elements); etc.

In the claims, as well as in the specification above, all transitional phrases such as "comprising," "including," "carrying," "having," "containing," "involving," "holding," "composed of," and the like are to be understood to be open-ended, i.e., to mean including but not limited to. Only the transitional phrases "consisting of" and "consisting essentially of" shall be closed or semi-closed transitional phrases, respectively, as set forth in the United States Patent Office Manual of Patent Examining Procedures, Section 2111.03.

What is claimed is:

1. A locate device docking station for holding, storing, and/or locking a locate device as used in a locate operation to identify a presence or an absence of at least one underground facility in a dig area, wherein at least a portion of the dig area is to be excavated or disturbed during excavation activities, the locate device docking station comprising:

a housing;

a mobile device interface to facilitate mechanical and electrical coupling and removal of a portable computing device; and

a docking interface, operably coupled to the housing, to mechanically receive the locate device and substantially hold the locate device when docked in the locate device docking station,

wherein the docking interface comprises:

a communication interface to transmit data between the locate device docking station and the locate device; and

a power interface to provide power from the locate device docking station to the locate device.

2. The locate device docking station of claim **1**, further comprising:

a processor;

a user input device; and

a memory, operably coupled to the communication interface, the processor, and the user input device, to store processor-executable instructions and/or data received via the communication interface and/or the user input device.

3. The locate device docking station of claim **2**, wherein upon execution by the processor of the processor-executable instructions, the processor controls the communication interface to receive operating information from the locate device when the locate device is docked in the docking station.

4. The locate device docking station of claim **3**, wherein the operating information of the locate device comprises at least one of:

a battery status of the locate device;

a location of the locate device; and

a user ID of a user from a list of approved users.

5. A locate device docking station for holding, storing, and/or locking a locate device as used in a locate operation to identify a presence or an absence of at least one underground facility in a dig area, wherein at least a portion of the dig area is to be excavated or disturbed during excavation activities, the locate device docking station comprising:

a housing;

a mobile device interface to facilitate mechanical and electrical coupling and removal of a portable computing device;

a docking interface, operably coupled to the housing, to mechanically receive the locate device and substantially hold the locate device when docked in the locate device docking station,

wherein the docking interface comprises:

a communication interface to transmit data between the locate device docking station and the locate device; and

a power interface to provide power from the locate device docking station to the locate device;

a processor;

a user input device;

a memory, operably coupled to the communication interface, the processor, and the user input device, to store processor-executable instructions and/or data received via the communication interface and/or the user input device; and

a locking mechanism to mechanically or electromagnetically secure the locate device to the locate device docking station when the locate device is docked in the docking station.

6. The locate device docking station of claim **5**, wherein upon execution by the processor of the processor-executable instructions, the processor:

controls the user input device or the communication interface to receive first identification information of a user; and

controls the locking mechanism to release the locate device if the first identification information matches second identification information, stored in the memory, of at least one approved user.

7. The locate device docking station of claim **5**, wherein upon execution by the processor of the processor-executable instructions, the processor controls the locking mechanism to lock the locate device, when the locate device is docked in the docking station, based at least in part on time information.

8. The locate device docking station of claim **5**, wherein upon execution by the processor of the processor-executable instructions, the processor controls the locking mechanism to lock the locate device, when the locate device is docked in the docking station, based at least in part on location information of the locate device.

9. A locate device docking station for holding, storing, and/or locking a locate device as used in a locate operation to identify a presence or an absence of at least one underground facility in a dig area, wherein at least a portion of the dig area is to be excavated or disturbed during excavation activities, the locate device docking station comprising:

a housing;

a mobile device interface to facilitate mechanical and electrical coupling and removal of a portable computing device; and

a docking interface, operably coupled to the housing, to mechanically receive the locate device and substantially hold the locate device when docked in the locate device docking station,

wherein the docking interface comprises:

a communication interface to transmit data between the locate device docking station and the locate device; and

a power interface to provide power from the locate device docking station to the locate device,

wherein the communication interface comprises a wireless interface for wireless communication between the locate device and the locate device docking station.

10. A locate device docking station for holding, storing, and/or locking a locate device as used in a locate operation to identify a presence or an absence of at least one underground facility in a dig area, wherein at least a portion of the dig area is to be excavated or disturbed during excavation activities, the locate device docking station comprising:

a housing;

a mobile device interface to facilitate mechanical and electrical coupling and removal of a portable computing device;

a docking interface, operably coupled to the housing, to mechanically receive the locate device and substantially hold the locate device when docked in the locate device docking station,

wherein the docking interface comprises:

a communication interface to transmit data between the locate device docking station and the locate device; and

a power interface to provide power from the locate device docking station to the locate device; and

an identification reader, to read in identification information of the locate device.

11. The locate device docking station of claim **10**, wherein the identification reader comprises at least one of:

a radio frequency identification (RFID) reader; and

a barcode reader.

12. The locate device docking station of claim **1**, further comprising:

a mounting interface, operably coupled to the housing, to mount the locate device docking station to at least a portion of a vehicle.

13. A locate device docking station for holding, storing, and/or locking a locate device as used in a locate operation to identify a presence or an absence of at least one underground facility in a dig area, wherein at least a portion of the dig area is to be excavated or disturbed during excavation activities, the locate device docking station comprising:

a housing;

a mobile device interface to facilitate mechanical and electrical coupling and removal of a portable computing device;

a docking interface, operably coupled to the housing, to mechanically receive the locate device and substantially hold the locate device when docked in the locate device docking station,

wherein the docking interface comprises:

a communication interface to transmit data between the locate device docking station and the locate device; and

a power interface to provide power from the locate device docking station to the locate device;

a mounting interface, operably coupled to the housing, to mount the locate device docking station to at least a portion of a vehicle; and

a second power interface, operably coupled to the housing, to electrically couple the locate device docking station to an electrical power system of the vehicle so as to receive power from the vehicle and to provide power to the power interface for the locate device.

14. A locate device docking station for holding, storing, and/or locking a locate device as used in a locate operation to identify a presence or an absence of at least one underground facility in a dig area, wherein at least a portion of the dig area is to be excavated or disturbed during excavation activities, the locate device docking station comprising:

a housing;

a mobile device interface to facilitate mechanical and electrical coupling and removal of a portable computing device;

a docking interface, operably coupled to the housing, to mechanically receive the locate device and substantially hold the locate device when docked in the locate device docking station,

wherein the docking interface comprises:

a communication interface to transmit data between the locate device docking station and the locate device; and

a power interface to provide power from the locate device docking station to the locate device,

the docking station further comprising the portable computing device communicatively coupled to the housing via the mobile device interface, wherein the portable computing device comprises:

a second processor;

a second memory to store processor-executable instructions;

a display device to display at least a portion of a graphic user interface (GUI); and

a second communication interface,

wherein the portable computing device is configured as a user terminal to control an operation of the locate device at least in part via the GUI.

15. An apparatus for holding, storing, and/or controlling a locate device as used in a locate operation to identify a presence or an absence of at least one underground facility in a dig area, wherein at least a portion of the dig area is to be excavated or disturbed during excavation activities, the apparatus comprising:

a locate device docking station to dock the locate device, the locate device docking station comprising a mobile device interface to facilitate mechanical and electrical coupling and removal of a portable computing device; and

the portable computing device communicatively coupled to the locate device docking station via the mobile device interface,

wherein the portable computing device comprises:

a processor;

a memory to store processor-executable instructions;

a display device to display at least a portion of a graphic user interface (GUI); and

a communication interface,

wherein the portable computing device is configured as a user terminal to control an operation of the locate device.

16. An apparatus for holding, storing, and/or controlling a locate device as used in a locate operation to identify a presence or an absence of at least one underground facility in a dig area, wherein at least a portion of the dig area is to be excavated or disturbed during excavation activities, the apparatus comprising:

a locate device docking station to dock the locate device, the locate device docking station comprising a mobile device interface to facilitate mechanical and electrical coupling and removal of a portable computing device; and

the portable computing device communicatively coupled to the locate device docking station via the mobile device interface,

wherein the portable computing device comprises:

a processor;

a memory to store processor-executable instructions;

a display device to display at least a portion of a graphic user interface (GUI); and

a communication interface,

wherein the portable computing device is configured as a user terminal to control an operation of the locate device, and wherein upon execution by the processor of the processor-executable instructions, the processor:

controls the communication interface to receive a current date and time from a timing system attached to the locate device; and

controls the memory to store the current date and time.

17. The apparatus of claim **16**, wherein upon execution by the processor of the processor-executable instructions, the processor:

controls the communication interface to receive a geographic location information from a location tracking system attached to the locate device; and

controls the memory to store the geographic location information.

18. The apparatus of claim **17**, wherein upon execution by the processor of the processor-executable instructions, the processor controls the display device to display a real-time manifest of the geographic location information received from the communication interface.

19. The apparatus of claim **15**, wherein upon execution by the processor of the processor-executable instructions, the processor:

controls the communication interface to receive a locate signal information from a locate receiver attached to the locate device; and

controls the memory to store the locate signal information.

20. The apparatus of claim **19**, wherein upon execution by the processor of the processor-executable instructions, the processor controls the display device to display a real-time manifest of the locate signal information received from the communication interface.

21. The apparatus of claim **15**, wherein upon execution by the processor of the processor-executable instructions, the processor controls the GUI to receive a user input from an operator so as to control an operation of the locate device during the locate operation.

22. A locate device docking station for holding, storing, and/or locking a locate device as used in a locate operation to identify a presence or an absence of at least one underground facility in a dig area, wherein at least a portion of the dig area is to be excavated or disturbed during excavation activities, the locate device docking station comprising:

a housing;

a portable computing device removably coupled to the housing, the portable computing device comprising:

a processor;

a memory to store processor-executable instructions;

a communication interface; and

a display device to display at least a portion of a graphic user interface (GUI); and

a docking interface, operably coupled to the housing and communicatively coupled to the portable computing device, to mechanically receive the locate device and substantially hold the locate device when docked in the locate device docking station,

wherein the locate device docking station is configured to control an operation of the locate device via at least one of the GUI and the communication interface.

23. The locate device docking station of claim **22**, wherein upon execution by the processor of the processor-executable instructions, the processor controls the GUI to receive a user input from an operator so as to control an operation status of the locate device during the locate operation.

24. The locate device docking station of claim **22**, wherein upon execution by the processor of the processor-executable instructions, the processor controls the at least one communication interface to control an operation status of the locate device during the locate operation according to operating parameters stored in the memory.

25. The locate device docking station of claim **22**, wherein upon execution by the processor of the processor-executable instructions, the processor

controls the GUI to receive first user identification information from an operator;

controls the at least one communication interface to disable the locate device if the first user identification information does not match second user identification information, stored in the memory, of at least one approved user.

* * * * *