US009741139B2

(12) **United States Patent**
Kamath et al.

(10) **Patent No.: US 9,741,139 B2**
(45) **Date of Patent: Aug. 22, 2017**

(54) **INTEGRATED MEDICAMENT DELIVERY DEVICE FOR USE WITH CONTINUOUS ANALYTE SENSOR**

(71) Applicant: **DexCom, Inc.**, San Diego, CA (US)

(72) Inventors: **Apurv Ullas Kamath**, San Diego, CA (US); **Richard C. Yang**, Carlsbad, CA (US); **Jacob S. Leach**, San Diego, CA (US); **Nelson Quintana**, San Diego, CA (US)

(73) Assignee: **DexCom, Inc.**, San Diego, CA (US)

(*) Notice: Subject to any disclaimer, the term of this patent is extended or adjusted under 35 U.S.C. 154(b) by 887 days.

(21) Appl. No.: **13/963,416**

(22) Filed: **Aug. 9, 2013**

(65) **Prior Publication Data**

US 2013/0324824 A1 Dec. 5, 2013

Related U.S. Application Data

(63) Continuation of application No. 12/133,786, filed on Jun. 5, 2008, now Pat. No. 8,562,558.

(Continued)

(51) **Int. Cl.**
A61M 31/00 (2006.01)
G06T 11/20 (2006.01)

(Continued)

(52) **U.S. Cl.**
CPC ***G06T 11/206*** (2013.01); ***A61B 5/0002*** (2013.01); ***A61B 5/14532*** (2013.01);

(Continued)

(58) **Field of Classification Search**
CPC A61B 2560/0406; A61B 2560/0431; A61B 2560/0443; A61B 5/0002; A61B 5/14532;

(Continued)

(56) **References Cited**

U.S. PATENT DOCUMENTS

2,719,797 A 10/1955 Rosenblatt et al.
3,210,578 A 10/1965 Sherer

(Continued)

FOREIGN PATENT DOCUMENTS

EP 0 098 592 1/1984
EP 0 127 958 12/1984

(Continued)

OTHER PUBLICATIONS

US 7,530,950, 05/2009, Brister et al. (withdrawn)

(Continued)

Primary Examiner — Jason Flick
(74) *Attorney, Agent, or Firm* — Knobbe, Martens, Olson & Bear, LLP

(57) **ABSTRACT**

An integrated system for the monitoring and treating diabetes is provided, including an integrated receiver/hand-held medicament injection pen, including electronics, for use with a continuous glucose sensor. In some embodiments, the receiver is configured to receive continuous glucose sensor data, to calculate a medicament therapy (e.g., via the integrated system electronics) and to automatically set a bolus dose of the integrated hand-held medicament injection pen, whereby the user can manually inject the bolus dose of medicament into the host. In some embodiments, the integrated receiver and hand-held medicament injection pen are integrally formed, while in other embodiments they are detachably connected and communicated via mutually engaging electrical contacts and/or via wireless communication.

20 Claims, 20 Drawing Sheets

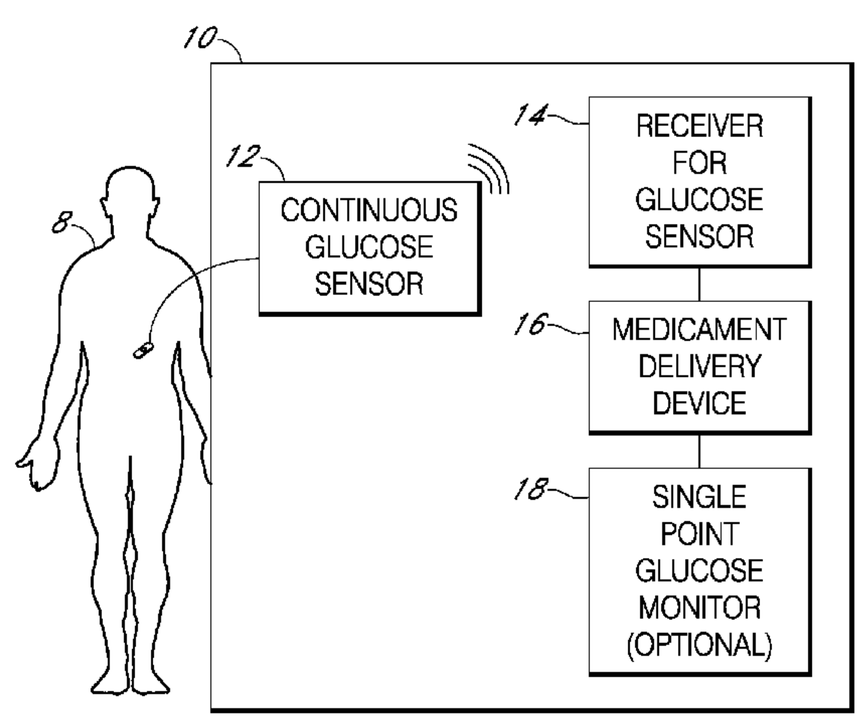

Related U.S. Application Data

(60) Provisional application No. 60/942,787, filed on Jun. 8, 2007.

(51) **Int. Cl.**

A61B 5/00	(2006.01)
A61B 5/145	(2006.01)
A61B 5/1486	(2006.01)
A61M 5/315	(2006.01)
A61M 5/24	(2006.01)
A61M 5/00	(2006.01)
A61M 5/142	(2006.01)
A61M 5/172	(2006.01)
A61M 5/31	(2006.01)

(52) **U.S. Cl.**
CPC ***A61B 5/14546*** (2013.01); ***A61B 5/14865*** (2013.01); ***A61B 5/4839*** (2013.01); ***A61M 5/24*** (2013.01); ***A61M 5/31525*** (2013.01); *A61B 2560/0406* (2013.01); *A61B 2560/0431* (2013.01); *A61B 2560/0443* (2013.01); *A61M 5/003* (2013.01); *A61M 5/14244* (2013.01); *A61M 5/1723* (2013.01); *A61M 5/3129* (2013.01); *A61M 2205/3569* (2013.01); *A61M 2205/505* (2013.01); *A61M 2209/086* (2013.01)

(58) **Field of Classification Search**
CPC A61B 5/14546; A61B 5/14865; A61B 5/4839; A61M 2205/3569; A61M 2205/505; A61M 2209/086; A61M 5/003; A61M 5/14244; A61M 5/1723; A61M 5/24; A61M 5/3129; A61M 5/31525; G06T 11/206
USPC 604/66
See application file for complete search history.

(56) **References Cited**

U.S. PATENT DOCUMENTS

3,219,533 A 11/1965 Mullins
3,381,371 A 5/1968 Russell
3,506,032 A 4/1970 Eveleigh et al.
3,556,950 A 1/1971 Dahms
3,610,226 A 10/1971 Albisser
3,780,727 A 12/1973 King
3,826,244 A 7/1974 Salcman et al.
3,837,339 A 9/1974 Aisenberg
3,838,682 A 10/1974 Clark et al.
3,874,850 A 4/1975 Sorensen et al.
3,898,984 A 8/1975 Mandel et al.
3,910,256 A 10/1975 Clark et al.
3,929,971 A 12/1975 Roy
3,933,593 A 1/1976 Sternberg
3,943,918 A 3/1976 Lewis
3,957,613 A 5/1976 Macur
3,979,274 A 9/1976 Newman
4,008,717 A 2/1977 Kowarski
4,016,866 A 4/1977 Lawton
4,052,754 A 10/1977 Homsy
4,055,175 A 10/1977 Clemens et al.
4,076,656 A 2/1978 White et al.
4,109,505 A 8/1978 Clark et al.
4,119,406 A 10/1978 Clemens
4,136,250 A 1/1979 Mueller et al.
4,151,845 A 5/1979 Clemens
4,176,659 A 12/1979 Rolfe
4,197,852 A 4/1980 Schindler et al.
4,206,755 A 6/1980 Klein
4,240,438 A 12/1980 Updike et al.
4,240,889 A 12/1980 Yoda et al.
4,245,634 A 1/1981 Albisser et al.
4,253,469 A 3/1981 Aslan
4,265,249 A 5/1981 Schindler et al.
4,327,725 A 5/1982 Cortese et al.
4,366,040 A 12/1982 Marsoner et al.
4,369,785 A 1/1983 Rehkopf et al.
4,374,013 A 2/1983 Enfors
4,403,984 A 9/1983 Ash et al.
4,415,666 A 11/1983 D'Orazio et al.
4,431,004 A 2/1984 Bessman et al.
4,432,366 A 2/1984 Margules
4,436,094 A 3/1984 Cerami
4,442,841 A 4/1984 Uehara et al.
4,454,295 A 6/1984 Wittmann et al.
4,457,339 A 7/1984 Juan et al.
4,477,314 A 10/1984 Richter et al.
4,478,222 A 10/1984 Koning et al.
4,486,290 A 12/1984 Cahalan et al.
4,492,575 A 1/1985 Mabille
4,494,950 A 1/1985 Fischell
4,506,680 A 3/1985 Stokes
4,519,973 A 5/1985 Cahalan et al.
RE31,916 E 6/1985 Oswin et al.
4,526,569 A 7/1985 Bernardi
4,534,825 A 8/1985 Koning et al.
4,535,786 A 8/1985 Kater
4,538,616 A 9/1985 Rogoff
4,545,382 A 10/1985 Higgins et al.
4,554,927 A 11/1985 Fussell
4,565,665 A 1/1986 Fogt
4,565,666 A 1/1986 Cahalan et al.
4,568,444 A 2/1986 Nakamura et al.
4,571,292 A 2/1986 Liu et al.
4,573,968 A 3/1986 Parker
4,577,642 A 3/1986 Stokes
4,583,976 A 4/1986 Ferguson
4,592,824 A 6/1986 Smith et al.
4,600,495 A 7/1986 Fogt
4,614,514 A 9/1986 Carr et al.
4,619,793 A 10/1986 Lee
4,625,730 A 12/1986 Fountain et al.
4,626,104 A 12/1986 Pointon et al.
4,632,968 A 12/1986 Yokota et al.
RE32,361 E 2/1987 Duggan
4,655,880 A 4/1987 Liu
4,671,288 A 6/1987 Gough
4,672,970 A 6/1987 Uchida et al.
4,680,268 A 7/1987 Clark, Jr.
4,685,463 A 8/1987 Williams
4,694,861 A 9/1987 Goodale et al.
4,702,732 A 10/1987 Powers et al.
4,703,756 A 11/1987 Gough et al.
4,705,503 A 11/1987 Dorman et al.
4,711,245 A 12/1987 Higgins
4,711,251 A 12/1987 Stokes
4,721,677 A 1/1988 Clark, Jr.
4,726,381 A 2/1988 Jones
4,731,726 A 3/1988 Allen
4,736,748 A 4/1988 Nakamura et al.
4,747,822 A 5/1988 Peabody
4,750,496 A 6/1988 Reinhart et al.
4,755,168 A 7/1988 Romanelli et al.
4,757,022 A 7/1988 Shults et al.
4,759,828 A 7/1988 Young et al.
4,763,648 A 8/1988 Wyatt
4,763,658 A 8/1988 Jones
4,777,953 A 10/1988 Ash et al.
4,781,798 A 11/1988 Gough
4,784,157 A 11/1988 Halls et al.
4,786,394 A 11/1988 Enzer et al.
4,787,398 A 11/1988 Garcia et al.
4,789,467 A 12/1988 Lindsay et al.
4,791,932 A 12/1988 Margules
4,803,243 A 2/1989 Fujimoto et al.
4,805,624 A 2/1989 Yao et al.
4,805,625 A 2/1989 Wyler
4,808,089 A 2/1989 Buchholtz et al.
4,808,292 A 2/1989 Kessler et al.
4,809,704 A 3/1989 Sogawa et al.
4,810,243 A 3/1989 Howson

(56) **References Cited**

U.S. PATENT DOCUMENTS

4,815,471 A 3/1989 Stobie
4,820,281 A 4/1989 Lawler
4,822,336 A 4/1989 DiTraglia
4,823,808 A 4/1989 Clegg et al.
4,828,544 A 5/1989 Lane et al.
4,830,013 A 5/1989 Maxwell
4,831,070 A 5/1989 McInally et al.
4,832,005 A 5/1989 Takamiya et al.
4,832,034 A 5/1989 Pizziconi
4,834,101 A 5/1989 Collison et al.
4,838,281 A 6/1989 Rogers et al.
4,841,974 A 6/1989 Gumbrecht et al.
4,849,458 A 7/1989 Reed et al.
4,852,573 A 8/1989 Kennedy
4,854,322 A 8/1989 Ash et al.
4,858,615 A 8/1989 Meinema
4,867,741 A 9/1989 Portnoy
4,874,363 A 10/1989 Abell
4,883,057 A 11/1989 Broderick
4,883,467 A 11/1989 Franetzki et al.
4,889,528 A 12/1989 Nadai et al.
4,890,620 A 1/1990 Gough
4,890,621 A 1/1990 Hakky
4,900,305 A 2/1990 Smith et al.
4,907,857 A 3/1990 Giuliani et al.
4,908,208 A 3/1990 Lee et al.
4,909,786 A 3/1990 Gijselhart et al.
4,919,141 A 4/1990 Zier et al.
4,919,649 A 4/1990 Timothy et al.
4,921,477 A 5/1990 Davis
4,921,480 A 5/1990 Sealfon
4,925,444 A 5/1990 Orkin et al.
4,927,407 A 5/1990 Dorman
4,927,516 A 5/1990 Yamaguchi et al.
4,928,694 A 5/1990 Maxwell
4,934,369 A 6/1990 Maxwell
4,934,375 A 6/1990 Cole et al.
4,944,299 A 7/1990 Silvian
4,946,439 A 8/1990 Eggers
4,951,657 A 8/1990 Pfister et al.
4,951,669 A 8/1990 Maxwell et al.
4,953,552 A 9/1990 DeMarzo
4,957,483 A 9/1990 Gonser et al.
4,963,595 A 10/1990 Ward et al.
4,966,579 A 10/1990 Polaschegg
4,967,940 A 11/1990 Blette
4,970,145 A 11/1990 Bennetto et al.
4,973,320 A 11/1990 Brenner et al.
4,974,592 A 12/1990 Branco
4,974,929 A 12/1990 Curry
4,975,636 A 12/1990 Desautels
4,976,687 A 12/1990 Martin
4,979,509 A 12/1990 Hakky
4,986,671 A 1/1991 Sun et al.
4,988,341 A 1/1991 Columbus et al.
4,989,607 A 2/1991 Keusch et al.
4,992,794 A 2/1991 Brouwers
4,994,026 A 2/1991 Fecondini
4,994,167 A 2/1991 Shults et al.
4,997,627 A 3/1991 Bergkuist et al.
5,002,055 A 3/1991 Merki et al.
5,002,572 A 3/1991 Picha
5,006,050 A 4/1991 Cooke et al.
5,006,111 A 4/1991 Inokuchi et al.
5,009,251 A 4/1991 Pike et al.
5,026,348 A 6/1991 Venegas
5,030,199 A 7/1991 Barwick et al.
5,030,333 A 7/1991 Clark, Jr.
5,034,112 A 7/1991 Murase et al.
5,035,711 A 7/1991 Aoki et al.
5,041,092 A 8/1991 Barwick
5,045,057 A 9/1991 Van Driessche et al.
5,046,496 A 9/1991 Betts et al.
5,048,525 A 9/1991 Maxwell
5,050,612 A 9/1991 Matsumura
5,055,171 A 10/1991 Peck
5,055,198 A 10/1991 Shettigar
5,068,536 A 11/1991 Rosenthal
5,070,169 A 12/1991 Robertson et al.
5,077,476 A 12/1991 Rosenthal
5,088,981 A 2/1992 Howson et al.
5,089,421 A 2/1992 Dieffenbach
5,096,669 A 3/1992 Lauks et al.
5,097,834 A 3/1992 Skrabal
5,098,377 A 3/1992 Borsanyi et al.
5,101,814 A 4/1992 Palti
5,108,819 A 4/1992 Heller et al.
5,109,850 A 5/1992 Blanco et al.
5,112,301 A 5/1992 Fenton et al.
5,116,313 A 5/1992 McGregor
5,127,405 A 7/1992 Alcala et al.
5,137,028 A 8/1992 Nishimura
5,140,985 A 8/1992 Schroeder et al.
5,145,565 A 9/1992 Kater et al.
5,152,746 A 10/1992 Atkinson et al.
5,160,418 A 11/1992 Mullen
5,161,532 A 11/1992 Joseph
5,165,406 A 11/1992 Wong et al.
5,165,407 A 11/1992 Wilson et al.
5,174,291 A 12/1992 Schoonen et al.
5,176,632 A 1/1993 Bernardi
5,176,658 A 1/1993 Ranford
5,178,142 A 1/1993 Harjunmaa et al.
5,182,004 A 1/1993 Kohno
5,188,591 A 2/1993 Dorsey
5,190,041 A 3/1993 Palti
5,195,963 A 3/1993 Yafuso et al.
5,198,771 A 3/1993 Fidler et al.
5,208,147 A 5/1993 Kagenow et al.
5,208,313 A 5/1993 Krishnan
5,220,917 A 6/1993 Cammilli et al.
5,220,920 A 6/1993 Gharib
5,224,929 A 7/1993 Remiszewski
5,225,063 A 7/1993 Gumbrecht et al.
5,232,434 A 8/1993 Inagaki et al.
5,243,982 A 9/1993 Mostl et al.
5,243,983 A 9/1993 Tarr et al.
5,249,576 A 10/1993 Goldberger et al.
5,251,126 A 10/1993 Kahn et al.
5,254,102 A 10/1993 Ogawa
5,262,305 A 11/1993 Heller et al.
5,264,104 A 11/1993 Gregg et al.
5,265,594 A 11/1993 Olsson et al.
5,266,179 A 11/1993 Nankai et al.
5,269,891 A 12/1993 Colin
5,271,736 A 12/1993 Picha
5,271,815 A 12/1993 Wong et al.
5,279,294 A 1/1994 Anderson et al.
5,281,319 A 1/1994 Kaneko et al.
5,282,848 A 2/1994 Schmitt
5,284,140 A 2/1994 Allen et al.
5,284,570 A 2/1994 Savage et al.
5,287,753 A 2/1994 Routh et al.
5,298,022 A 3/1994 Bernardi
5,299,571 A 4/1994 Mastrototaro
5,302,093 A 4/1994 Owens et al.
5,304,468 A 4/1994 Phillips et al.
5,307,263 A 4/1994 Brown
5,310,469 A 5/1994 Cunningham et al.
5,311,908 A 5/1994 Barone et al.
5,312,361 A 5/1994 Zadini et al.
5,316,008 A 5/1994 Suga et al.
5,316,452 A 5/1994 Bogen et al.
5,318,511 A 6/1994 Riquier et al.
5,322,063 A 6/1994 Allen et al.
5,324,322 A 6/1994 Grill et al.
5,326,449 A 7/1994 Cunningham
5,330,634 A 7/1994 Wong et al.
5,331,555 A 7/1994 Hashimoto et al.
5,335,658 A 8/1994 Bedingham
5,337,747 A 8/1994 Neftel
5,342,409 A 8/1994 Mullett
5,342,789 A 8/1994 Chick et al.
5,345,932 A 9/1994 Yafuso et al.

(56) **References Cited**

U.S. PATENT DOCUMENTS

5,352,348 A 10/1994 Young et al.
5,352,351 A 10/1994 White
5,354,272 A 10/1994 Swendson et al.
5,354,449 A 10/1994 Band et al.
5,356,375 A 10/1994 Higley
5,356,378 A 10/1994 Doan
5,368,028 A 11/1994 Palti
5,368,224 A 11/1994 Richardson et al.
5,368,562 A 11/1994 Blomquist et al.
5,372,133 A 12/1994 Hogen Esch
5,372,135 A 12/1994 Mendelson et al.
5,372,709 A 12/1994 Hood
5,376,070 A 12/1994 Purvis et al.
5,378,229 A 1/1995 Layer et al.
5,380,268 A 1/1995 Wheeler
5,380,491 A 1/1995 Carver et al.
5,380,536 A 1/1995 Hubbell et al.
5,380,665 A 1/1995 Cusack et al.
5,390,671 A 2/1995 Lord et al.
5,391,250 A 2/1995 Cheney, II et al.
5,411,052 A 5/1995 Murray
5,411,647 A 5/1995 Johnson et al.
5,411,866 A 5/1995 Luong
5,417,206 A 5/1995 Kaneyoshi
5,421,328 A 6/1995 Bedingham
5,423,738 A 6/1995 Robinson et al.
5,423,749 A 6/1995 Merte et al.
5,428,123 A 6/1995 Ward et al.
5,429,485 A 7/1995 Dodge
5,429,602 A 7/1995 Hauser
5,429,735 A 7/1995 Johnson et al.
5,431,160 A 7/1995 Wilkins
5,431,174 A 7/1995 Knute
5,431,921 A 7/1995 Thombre
5,434,412 A 7/1995 Sodickson et al.
5,437,635 A 8/1995 Fields et al.
5,438,984 A 8/1995 Schoendorfer
5,443,508 A 8/1995 Giampapa
5,445,610 A 8/1995 Evert
5,451,260 A 9/1995 Versteeg et al.
5,458,631 A 10/1995 Xavier et al.
5,462,051 A 10/1995 Oka et al.
5,462,064 A 10/1995 D'Angelo et al.
5,466,356 A 11/1995 Schneider et al.
5,469,846 A 11/1995 Khan
5,474,552 A 12/1995 Palti
5,476,776 A 12/1995 Wilkins
5,482,008 A 1/1996 Stafford et al.
5,482,446 A 1/1996 Williamson et al.
5,482,473 A 1/1996 Lord et al.
5,484,404 A 1/1996 Schulman et al.
5,494,562 A 2/1996 Maley et al.
5,497,772 A 3/1996 Schulman et al.
5,502,396 A 3/1996 Desarzens et al.
5,505,828 A 4/1996 Wong et al.
5,507,288 A 4/1996 Bocker et al.
5,509,888 A 4/1996 Miller
5,512,046 A 4/1996 Pusinelli et al.
5,512,055 A 4/1996 Domb et al.
5,512,248 A 4/1996 Van
5,513,636 A 5/1996 Palti
5,514,253 A 5/1996 Davis et al.
5,515,851 A 5/1996 Goldstein
5,518,601 A 5/1996 Foos et al.
5,527,288 A 6/1996 Gross
5,531,679 A 7/1996 Schulman et al.
5,531,878 A 7/1996 Vadgama et al.
5,538,511 A 7/1996 Van Antwerp
5,540,828 A 7/1996 Yacynych
5,545,223 A 8/1996 Neuenfeldt et al.
5,549,547 A 8/1996 Cohen et al.
5,549,548 A 8/1996 Larsson
5,549,569 A 8/1996 Lynn et al.
5,549,651 A 8/1996 Lynn
5,551,850 A 9/1996 Williamson et al.
5,553,616 A 9/1996 Ham et al.
5,554,339 A 9/1996 Cozzette
5,562,614 A 10/1996 O'Donnell
5,562,615 A 10/1996 Nassif
5,564,439 A 10/1996 Picha
5,568,806 A 10/1996 Cheney, II et al.
5,569,186 A 10/1996 Lord et al.
5,569,188 A 10/1996 Mackool
5,569,219 A 10/1996 Hakki et al.
5,569,462 A 10/1996 Martinson et al.
5,577,499 A 11/1996 Teves
5,582,184 A 12/1996 Erickson et al.
5,582,593 A 12/1996 Hultman
5,584,813 A 12/1996 Livingston et al.
5,586,553 A 12/1996 Halili et al.
5,589,133 A 12/1996 Suzuki
5,590,651 A 1/1997 Shaffer et al.
5,609,572 A 3/1997 Lang
5,611,900 A 3/1997 Worden
5,624,409 A 4/1997 Seale
5,624,537 A 4/1997 Turner et al.
5,626,563 A 5/1997 Dodge et al.
5,628,619 A 5/1997 Wilson
5,628,890 A 5/1997 Carter et al.
5,637,083 A 6/1997 Bertrand et al.
5,640,470 A 6/1997 Iyer et al.
5,643,195 A 7/1997 Drevet et al.
5,651,767 A 7/1997 Schulman et al.
5,653,863 A 8/1997 Genshaw et al.
5,658,250 A 8/1997 Blomquist et al.
5,660,163 A 8/1997 Schulman et al.
5,665,061 A 9/1997 Antwiler
5,665,065 A 9/1997 Colman et al.
5,667,504 A 9/1997 Baumann et al.
5,673,694 A 10/1997 Rivers
5,676,651 A 10/1997 Larson et al.
5,676,820 A 10/1997 Wang et al.
5,681,572 A 10/1997 Seare
5,682,884 A 11/1997 Hill
5,683,562 A 11/1997 Schaffar et al.
5,688,239 A 11/1997 Walker
5,688,244 A 11/1997 Lang
5,695,623 A 12/1997 Michel et al.
5,696,314 A 12/1997 McCaffrey et al.
5,697,366 A 12/1997 Kimball et al.
5,697,899 A 12/1997 Hillman et al.
5,704,354 A 1/1998 Preidel et al.
5,706,807 A 1/1998 Picha
5,711,861 A 1/1998 Ward et al.
5,713,888 A 2/1998 Neuenfeldt et al.
5,730,654 A 3/1998 Brown
5,733,336 A 3/1998 Neuenfeldt et al.
5,743,262 A 4/1998 Lepper, Jr. et al.
5,749,832 A 5/1998 Vadgama et al.
5,749,907 A 5/1998 Mann
5,755,692 A 5/1998 Manicom
5,756,632 A 5/1998 Ward et al.
5,758,643 A 6/1998 Wong et al.
5,763,760 A 6/1998 Gumbrecht et al.
5,773,286 A 6/1998 Dionne et al.
5,776,324 A 7/1998 Usala
5,779,665 A 7/1998 Mastrototaro et al.
5,782,880 A 7/1998 Lahtinen et al.
5,787,900 A 8/1998 Butler et al.
5,791,344 A 8/1998 Schulman et al.
5,791,880 A 8/1998 Wilson
5,795,453 A 8/1998 Gilmartin
5,795,774 A 8/1998 Matsumoto et al.
5,798,065 A 8/1998 Picha
5,800,383 A 9/1998 Chandler et al.
5,800,420 A 9/1998 Gross
5,806,517 A 9/1998 Gerhardt et al.
5,807,274 A 9/1998 Henning et al.
5,807,312 A 9/1998 Dzwonkiewicz
5,807,375 A 9/1998 Gross et al.
5,810,770 A 9/1998 Chin et al.
5,811,487 A 9/1998 Schulz, Jr. et al.
5,814,599 A 9/1998 Mitragotri et al.
5,820,589 A 10/1998 Torgerson et al.

(56) **References Cited**

U.S. PATENT DOCUMENTS

5,820,622 A 10/1998 Gross et al.
5,822,715 A 10/1998 Worthington et al.
5,836,887 A 11/1998 Oka et al.
5,836,989 A 11/1998 Shelton
5,837,454 A 11/1998 Cozzette et al.
5,837,728 A 11/1998 Purcell
5,840,026 A 11/1998 Uber et al.
5,840,148 A 11/1998 Campbell et al.
5,848,991 A 12/1998 Gross
5,851,197 A 12/1998 Marano et al.
5,851,229 A 12/1998 Lentz et al.
5,858,365 A 1/1999 Faller
5,858,747 A 1/1999 Schinstine et al.
5,861,019 A 1/1999 Sun et al.
5,871,514 A 2/1999 Wiklund et al.
5,873,862 A 2/1999 Lopez
5,879,713 A 3/1999 Roth et al.
5,882,494 A 3/1999 Van Antwerp
5,895,235 A 4/1999 Droz
5,897,525 A 4/1999 Dey et al.
5,897,578 A 4/1999 Wiklund et al.
5,899,855 A 5/1999 Brown
5,904,666 A 5/1999 Dedecker et al.
5,904,708 A 5/1999 Goedeke
5,911,219 A 6/1999 Aylsworth et al.
5,913,998 A 6/1999 Butler et al.
5,914,026 A 6/1999 Blubaugh, Jr. et al.
5,919,215 A 7/1999 Wiklund et al.
5,921,951 A 7/1999 Morris
5,928,155 A 7/1999 Eggers et al.
5,928,182 A 7/1999 Kraus et al.
5,928,189 A 7/1999 Phillips et al.
5,928,195 A 7/1999 Malamud et al.
5,931,814 A 8/1999 Alex et al.
5,932,175 A 8/1999 Knute et al.
5,933,136 A 8/1999 Brown
5,935,785 A 8/1999 Reber et al.
5,938,636 A 8/1999 Kramer et al.
5,944,661 A 8/1999 Swette et al.
5,947,911 A 9/1999 Wong et al.
5,954,643 A 9/1999 VanAntwerp et al.
5,954,954 A 9/1999 Houck et al.
5,957,854 A 9/1999 Besson et al.
5,961,451 A 10/1999 Reber et al.
5,963,132 A 10/1999 Yoakum
5,964,745 A 10/1999 Lyles et al.
5,964,993 A 10/1999 Blubaugh et al.
5,965,125 A 10/1999 Mineau-Hanschke
5,965,380 A 10/1999 Heller et al.
5,971,922 A 10/1999 Arita et al.
5,972,369 A 10/1999 Roorda et al.
5,976,085 A 11/1999 Kimball et al.
5,987,352 A 11/1999 Klein et al.
5,995,208 A 11/1999 Sarge et al.
5,995,860 A 11/1999 Sun et al.
5,997,501 A 12/1999 Gross
6,001,067 A 12/1999 Shults et al.
6,002,954 A 12/1999 Van Antwerp et al.
6,007,845 A 12/1999 Domb
6,011,984 A 1/2000 Van Antwerp et al.
6,014,577 A 1/2000 Henning et al.
6,016,448 A 1/2000 Busacker et al.
6,017,435 A 1/2000 Hassard et al.
6,024,720 A 2/2000 Chandler et al.
6,027,445 A 2/2000 Von Bahr
6,027,479 A 2/2000 Alei et al.
6,032,059 A 2/2000 Henning et al.
6,032,667 A 3/2000 Heinonen
6,036,924 A 3/2000 Simons et al.
6,043,328 A 3/2000 Domschke et al.
6,045,671 A 4/2000 Wu et al.
6,048,691 A 4/2000 Maracas
6,049,727 A 4/2000 Crothall
6,059,946 A 5/2000 Yukawa et al.
6,063,637 A 5/2000 Arnold et al.
6,066,088 A 5/2000 Davis
6,066,448 A 5/2000 Wohlstadter et al.
6,071,391 A 6/2000 Gotoh et al.
6,077,299 A 6/2000 Adelberg et al.
6,080,583 A 6/2000 Von Bahr
6,081,735 A 6/2000 Diab et al.
6,081,736 A 6/2000 Colvin et al.
6,083,523 A 7/2000 Dionne et al.
6,088,608 A 7/2000 Schulman et al.
6,090,087 A 7/2000 Tsukada et al.
6,091,975 A 7/2000 Daddona et al.
6,093,172 A 7/2000 Funderburk et al.
6,099,511 A 8/2000 Devos et al.
6,103,033 A 8/2000 Say et al.
6,107,083 A 8/2000 Collins et al.
6,117,290 A 9/2000 Say
6,122,536 A 9/2000 Sun et al.
6,123,827 A 9/2000 Wong et al.
6,127,154 A 10/2000 Mosbach et al.
6,128,519 A 10/2000 Say
6,135,978 A 10/2000 Houben et al.
6,144,869 A 11/2000 Berner et al.
6,159,186 A 12/2000 Wickham et al.
6,162,201 A 12/2000 Cohen et al.
6,162,611 A 12/2000 Heller et al.
6,164,921 A 12/2000 Moubayed et al.
6,165,154 A 12/2000 Gray et al.
6,168,568 B1 1/2001 Gavriely
6,169,155 B1 1/2001 Alvarez et al.
6,171,276 B1 1/2001 Lippe et al.
6,175,752 B1 1/2001 Say et al.
6,180,416 B1 1/2001 Kurnik et al.
6,183,437 B1 2/2001 Walker
6,189,536 B1 2/2001 Martinez et al.
6,191,860 B1 2/2001 Klinger et al.
6,192,891 B1 2/2001 Gravel
6,201,980 B1 3/2001 Darrow et al.
6,201,993 B1 3/2001 Kruse et al.
6,208,894 B1 3/2001 Schulman et al.
6,212,416 B1 4/2001 Ward et al.
6,212,424 B1 4/2001 Robinson
6,213,739 B1 4/2001 Phallen et al.
6,219,574 B1 4/2001 Cormier et al.
6,223,080 B1 4/2001 Thompson
6,223,083 B1 4/2001 Rosar
6,230,059 B1 5/2001 Duffin
6,231,879 B1 5/2001 Li et al.
6,232,783 B1 5/2001 Merrill
6,233,080 B1 5/2001 Brenner et al.
6,233,471 B1 5/2001 Berner et al.
6,248,067 B1 6/2001 Causey, III et al.
6,248,077 B1 6/2001 Elson et al.
6,248,093 B1 6/2001 Moberg
6,254,586 B1 7/2001 Mann et al.
6,256,522 B1 7/2001 Schultz
6,259,937 B1 7/2001 Schulman et al.
6,263,222 B1 7/2001 Diab et al.
6,264,825 B1 7/2001 Blackburn et al.
6,270,478 B1 8/2001 Mern et al.
6,271,332 B1 8/2001 Lohmann et al.
6,272,364 B1 8/2001 Kurnik
6,272,382 B1 8/2001 Faltys et al.
6,272,480 B1 8/2001 Tresp et al.
6,275,717 B1 8/2001 Gross et al.
6,280,408 B1 8/2001 Sipin
6,281,015 B1 8/2001 Mooney et al.
6,284,478 B1 9/2001 Heller et al.
6,293,925 B1 9/2001 Safabash et al.
6,299,578 B1 10/2001 Kurnik et al.
6,299,583 B1 10/2001 Eggers et al.
6,302,855 B1 10/2001 Lav et al.
6,309,351 B1 10/2001 Kurnik et al.
6,309,384 B1 10/2001 Harrington et al.
6,309,884 B1 10/2001 Cooper et al.
6,315,738 B1 11/2001 Nishikawa et al.
6,325,978 B1 12/2001 Labuda et al.
6,326,160 B1 12/2001 Dunn et al.
6,329,161 B1 12/2001 Heller et al.
6,329,929 B1 12/2001 Weijand et al.

(56) **References Cited**

U.S. PATENT DOCUMENTS

6,330,464 B1 12/2001 Colvin, Jr. et al.
6,343,225 B1 1/2002 Clark, Jr.
6,356,776 B1 3/2002 Berner et al.
6,358,225 B1 3/2002 Butterfield
6,366,794 B1 4/2002 Moussy et al.
6,368,274 B1 4/2002 Van Antwerp et al.
6,370,941 B2 4/2002 Nakamura
6,372,244 B1 4/2002 Antanavich et al.
6,379,301 B1 4/2002 Worthington et al.
6,383,478 B1 5/2002 Prokop et al.
6,391,019 B1 5/2002 Ito
6,400,974 B1 6/2002 Lesho
6,402,703 B1 6/2002 Kensey et al.
6,403,944 B1 6/2002 Mackenzie et al.
6,406,066 B1 6/2002 Uegane
6,407,195 B2 6/2002 Sherman et al.
6,409,674 B1 6/2002 Brockway et al.
6,416,651 B1 7/2002 Millar
6,424,847 B1 7/2002 Mastrototaro et al.
6,430,437 B1 8/2002 Marro
6,447,448 B1 9/2002 Ishikawa et al.
6,459,917 B1 10/2002 Gowda et al.
6,461,496 B1 10/2002 Feldman et al.
6,464,849 B1 10/2002 Say et al.
6,466,810 B1 10/2002 Ward et al.
6,467,480 B1 10/2002 Meier et al.
6,471,689 B1 10/2002 Joseph et al.
6,474,360 B1 11/2002 Ito
6,475,750 B1 11/2002 Han et al.
6,477,392 B1 11/2002 Honigs et al.
6,477,395 B2 11/2002 Schulman et al.
6,481,440 B2 11/2002 Gielen et al.
6,484,045 B1 11/2002 Holker et al.
6,484,046 B1 11/2002 Say et al.
6,485,449 B2 11/2002 Ito
6,488,652 B1 12/2002 Weijand et al.
6,494,879 B2 12/2002 Lennox et al.
6,497,729 B1 12/2002 Moussy et al.
6,498,941 B1 12/2002 Jackson
6,501,976 B1 12/2002 Sohrab
6,510,329 B2 1/2003 Heckel
6,512,939 B1 1/2003 Colvin et al.
6,514,718 B2 2/2003 Heller et al.
6,517,508 B1 2/2003 Utterberg et al.
6,520,326 B2 2/2003 McIvor et al.
6,520,477 B2 2/2003 Trimmer
6,520,937 B2 2/2003 Hart et al.
6,520,997 B1 2/2003 Pekkarinen et al.
6,526,298 B1 2/2003 Khalil et al.
6,527,729 B1 3/2003 Turcott
6,534,711 B1 3/2003 Pollack
6,536,433 B1 3/2003 Cewers
6,542,765 B1 4/2003 Guy et al.
6,544,212 B2 4/2003 Galley et al.
6,545,085 B2 4/2003 Kilgour et al.
6,546,268 B1 4/2003 Ishikawa et al.
6,546,269 B1 4/2003 Kurnik
6,551,496 B1 4/2003 Moles et al.
6,553,241 B2 4/2003 Mannheimer et al.
6,553,244 B2 4/2003 Lesho et al.
6,554,805 B2 4/2003 Hiejima
6,554,822 B1 4/2003 Holschneider et al.
6,558,320 B1 5/2003 Causey
6,558,321 B1 5/2003 Burd et al.
6,558,347 B1 5/2003 Jhuboo et al.
6,558,351 B1 5/2003 Steil et al.
6,560,471 B1 5/2003 Heller et al.
6,561,978 B1 5/2003 Conn et al.
6,565,509 B1 5/2003 Plante et al.
6,565,535 B2 5/2003 Zaias et al.
6,565,807 B1 5/2003 Patterson et al.
6,569,195 B2 5/2003 Yang et al.
6,572,545 B2 6/2003 Knobbe et al.
6,572,579 B1 6/2003 Raghavan et al.
6,574,490 B2 6/2003 Abbink et al.
6,575,905 B2 6/2003 Knobbe et al.
6,579,257 B1 6/2003 Elgas et al.
6,579,498 B1 6/2003 Eglise
6,579,690 B1 6/2003 Bonnecaze et al.
6,585,644 B2 7/2003 Lebel et al.
6,585,675 B1 7/2003 O'Mahony et al.
6,585,763 B1 7/2003 Keilman et al.
6,587,705 B1 7/2003 Kim et al.
6,589,229 B1 7/2003 Connelly et al.
6,591,125 B1 7/2003 Buse et al.
6,594,514 B2 7/2003 Berner et al.
6,595,756 B2 7/2003 Gray et al.
6,595,919 B2 7/2003 Berner et al.
6,602,221 B1 8/2003 Saravia et al.
6,605,072 B2 8/2003 Struys et al.
6,607,509 B2 8/2003 Bobroff et al.
6,609,071 B2 8/2003 Shapiro et al.
6,612,984 B1 9/2003 Kerr
6,613,379 B2 9/2003 Ward et al.
6,615,061 B1 9/2003 Khalil et al.
6,615,078 B1 9/2003 Burson et al.
6,618,603 B2 9/2003 Varalli et al.
6,618,934 B1 9/2003 Feldman et al.
6,633,772 B2 10/2003 Ford et al.
6,641,533 B2 11/2003 Causey et al.
6,645,181 B1 11/2003 Lavi et al.
6,648,821 B2 11/2003 Lebel et al.
6,653,091 B1 11/2003 Dunn et al.
6,654,625 B1 11/2003 Say et al.
6,656,157 B1 12/2003 Duchon et al.
6,663,615 B1 12/2003 Madou et al.
6,673,022 B1 1/2004 Bobo et al.
6,673,596 B1 1/2004 Sayler et al.
6,679,865 B2 1/2004 Shekalim
6,679,872 B2 1/2004 Turovskiy et al.
6,684,904 B2 2/2004 Ito
6,685,668 B1 2/2004 Cho et al.
6,689,089 B1 2/2004 Tiedtke et al.
6,689,265 B2 2/2004 Heller et al.
6,694,191 B2 2/2004 Starkweather et al.
6,695,860 B1 2/2004 Ward et al.
6,699,188 B2 3/2004 Wessel
6,699,218 B2 3/2004 Flaherty et al.
6,699,383 B2 3/2004 Lemire et al.
6,702,249 B2 3/2004 Ito
6,702,857 B2 3/2004 Brauker et al.
6,702,972 B1 3/2004 Markle
6,711,424 B1 3/2004 Fine et al.
6,712,796 B2 3/2004 Fentis et al.
6,721,587 B2 4/2004 Gough
6,723,086 B2 4/2004 Bassuk et al.
6,731,976 B2 5/2004 Penn et al.
6,736,783 B2 5/2004 Blake et al.
6,740,075 B2 5/2004 Lebel et al.
6,741,877 B1 5/2004 Shults et al.
6,743,635 B2 6/2004 Neel et al.
6,749,587 B2 6/2004 Flaherty
6,770,030 B1 8/2004 Schaupp et al.
6,770,067 B2 8/2004 Lorenzen et al.
6,773,565 B2 8/2004 Kunimoto et al.
6,780,297 B2 8/2004 Matsumoto et al.
6,793,632 B2 9/2004 Sohrab
6,801,041 B2 10/2004 Karinka et al.
6,802,957 B2 10/2004 Jung et al.
6,804,002 B2 10/2004 Fine et al.
6,805,693 B2 10/2004 Gray et al.
6,809,653 B1 10/2004 Mann et al.
6,810,290 B2 10/2004 Lebel et al.
6,811,548 B2 11/2004 Jeffrey
6,813,519 B2 11/2004 Lebel et al.
6,850,790 B2 2/2005 Berner et al.
6,858,020 B2 2/2005 Rusnak
6,862,465 B2 3/2005 Shults et al.
6,869,413 B2 3/2005 Langley et al.
6,887,228 B2 5/2005 McKay
6,892,085 B2 5/2005 McIvor et al.
6,893,552 B1 5/2005 Wang et al.
6,895,263 B2 5/2005 Shin et al.
6,895,265 B2 5/2005 Silver

(56) **References Cited**

U.S. PATENT DOCUMENTS

6,902,544 B2 6/2005 Ludin et al.
6,925,393 B1 8/2005 Kalatz et al.
6,926,691 B2 8/2005 Miethke
6,931,327 B2 8/2005 Goode et al.
6,932,584 B2 8/2005 Gray et al.
6,936,006 B2 8/2005 Sabra
6,945,965 B2 9/2005 Whiting
6,948,492 B2 9/2005 Wermeling et al.
6,952,604 B2 10/2005 DeNuzzio et al.
6,954,662 B2 10/2005 Freger et al.
6,960,192 B1 11/2005 Flaherty et al.
6,965,791 B1 11/2005 Hitchcock et al.
6,966,325 B2 11/2005 Erickson
6,975,893 B2 12/2005 Say et al.
6,979,315 B2 12/2005 Rogers et al.
6,989,891 B2 1/2006 Braig et al.
6,997,921 B2 2/2006 Gray et al.
6,998,247 B2 2/2006 Monfre et al.
7,008,979 B2 3/2006 Schottman et al.
7,011,630 B2 3/2006 Desai et al.
7,022,219 B2 4/2006 Mansouri et al.
7,025,727 B2 4/2006 Brockway et al.
7,025,743 B2 4/2006 Mann et al.
7,029,444 B2 4/2006 Shin et al.
7,033,322 B2 4/2006 Silver
7,048,727 B1 5/2006 Moss
7,058,437 B2 6/2006 Buse et al.
7,060,059 B2 6/2006 Keith et al.
7,061,593 B2 6/2006 Braig et al.
7,063,086 B2 6/2006 Shahbazpour et al.
7,066,884 B2 6/2006 Custer et al.
7,070,577 B1 7/2006 Haller et al.
7,074,307 B2 7/2006 Simpson et al.
7,081,195 B2 7/2006 Simpson et al.
7,097,775 B2 8/2006 Greenberg et al.
7,098,803 B2 8/2006 Mann et al.
7,100,628 B1 9/2006 Izenson et al.
7,120,483 B2 10/2006 Russell et al.
7,131,967 B2 11/2006 Gray et al.
7,134,999 B2 11/2006 Brauker et al.
7,136,689 B2 11/2006 Shults et al.
7,146,202 B2 12/2006 Ward et al.
7,150,741 B2 12/2006 Erickson et al.
7,162,290 B1 1/2007 Levin
7,168,597 B1 1/2007 Jones et al.
7,169,289 B2 1/2007 Schulein et al.
7,184,810 B2 2/2007 Caduff et al.
7,207,968 B1 4/2007 Harcinske
7,211,074 B2 5/2007 Sansoucy
7,221,970 B2 5/2007 Parker
7,223,253 B2 5/2007 Hogendijk
7,225,535 B2 6/2007 Feldman et al.
7,228,162 B2 6/2007 Ward et al.
7,229,288 B2 6/2007 Stuart et al.
7,238,165 B2 7/2007 Vincent et al.
7,247,138 B2 7/2007 Reghabi et al.
7,254,450 B2 8/2007 Christopherson et al.
7,255,690 B2 8/2007 Gray et al.
7,258,681 B2 8/2007 Houde
7,261,690 B2 8/2007 Teller et al.
7,266,400 B2 9/2007 Fine et al.
7,267,665 B2 9/2007 Steil et al.
7,276,029 B2 10/2007 Goode et al.
7,278,983 B2 10/2007 Ireland et al.
7,279,174 B2 10/2007 Pacetti et al.
7,288,085 B2 10/2007 Olsen
7,295,867 B2 11/2007 Berner et al.
7,311,690 B2 12/2007 Burnett
7,313,425 B2 12/2007 Finarov et al.
7,314,452 B2 1/2008 Madonia
7,315,767 B2 1/2008 Caduff et al.
7,316,662 B2 1/2008 Delnevo et al.
7,317,939 B2 1/2008 Fine et al.
7,318,814 B2 1/2008 Levine et al.
7,327,273 B2 2/2008 Hung et al.
7,329,234 B2 2/2008 Sansoucy
7,334,594 B2 2/2008 Ludin
7,335,179 B2 2/2008 Burnett
7,335,195 B2 2/2008 Mehier
7,338,464 B2 3/2008 Blischak et al.
7,354,420 B2 4/2008 Steil et al.
7,357,793 B2 4/2008 Pacetti
7,359,723 B2 4/2008 Jones
7,361,155 B2 4/2008 Sage et al.
7,364,562 B2 4/2008 Braig et al.
7,367,942 B2 5/2008 Grage et al.
7,396,353 B2 7/2008 Lorenzen et al.
7,402,153 B2 7/2008 Steil et al.
7,417,164 B2 8/2008 Suri
7,426,408 B2 9/2008 DeNuzzio et al.
7,519,408 B2 4/2009 Rasdal et al.
7,519,478 B2 4/2009 Bartkowiak et al.
7,523,004 B2 4/2009 Bartkowiak et al.
7,583,990 B2 9/2009 Goode, Jr. et al.
7,591,801 B2 9/2009 Brauker et al.
7,599,726 B2 10/2009 Goode, Jr. et al.
7,615,007 B2 11/2009 Shults et al.
7,618,368 B2 11/2009 Brown
7,624,028 B1 11/2009 Brown
7,640,032 B2 12/2009 Jones
7,640,048 B2 12/2009 Dobbles et al.
7,654,955 B2 2/2010 Polidori et al.
7,657,297 B2 2/2010 Simpson et al.
9,451,908 B2 * 9/2016 Kamath A61B 5/7235
2001/0016682 A1 8/2001 Berner et al.
2001/0021817 A1 9/2001 Brugger et al.
2001/0039053 A1 11/2001 Liseo et al.
2001/0041830 A1 11/2001 Varalli et al.
2001/0051768 A1 12/2001 Schulman et al.
2002/0009810 A1 1/2002 O'Connor et al.
2002/0018843 A1 2/2002 Van Antwerp et al.
2002/0019022 A1 2/2002 Dunn et al.
2002/0019330 A1 2/2002 Murray et al.
2002/0022883 A1 2/2002 Burg
2002/0023852 A1 2/2002 McIvor et al.
2002/0026111 A1 2/2002 Ackerman
2002/0042090 A1 4/2002 Heller et al.
2002/0042561 A1 4/2002 Schulman et al.
2002/0043471 A1 4/2002 Ikeda et al.
2002/0045808 A1 4/2002 Ford et al.
2002/0065453 A1 5/2002 Lesho et al.
2002/0068860 A1 6/2002 Clark, Jr.
2002/0071776 A1 6/2002 Bandis et al.
2002/0084196 A1 7/2002 Liamos et al.
2002/0099282 A1 7/2002 Knobbe et al.
2002/0099997 A1 7/2002 Piret
2002/0111547 A1 8/2002 Knobbe et al.
2002/0119711 A1 8/2002 Van Antwerp et al.
2002/0133224 A1 9/2002 Bajgar et al.
2002/0155615 A1 10/2002 Novikov et al.
2002/0161288 A1 10/2002 Shin et al.
2002/0182241 A1 12/2002 Borenstein et al.
2002/0188185 A1 12/2002 Sohrab
2002/0198513 A1 12/2002 Lebel et al.
2003/0006669 A1 1/2003 Pei et al.
2003/0023171 A1 1/2003 Sato et al.
2003/0023317 A1 1/2003 Brauker et al.
2003/0028089 A1 2/2003 Galley et al.
2003/0031699 A1 2/2003 Van Antwerp
2003/0032874 A1 2/2003 Rhodes et al.
2003/0050546 A1 3/2003 Desai et al.
2003/0070548 A1 4/2003 Clausen
2003/0072741 A1 4/2003 Berglund et al.
2003/0076082 A1 4/2003 Morgan et al.
2003/0078481 A1 4/2003 McIvor et al.
2003/0078560 A1 4/2003 Miller et al.
2003/0097082 A1 5/2003 Purdy et al.
2003/0099682 A1 5/2003 Moussy et al.
2003/0100040 A1 5/2003 Bonnecaze et al.
2003/0100821 A1 5/2003 Heller et al.
2003/0125612 A1 7/2003 Fox et al.
2003/0125613 A1 7/2003 Enegren et al.
2003/0130616 A1 7/2003 Steil et al.
2003/0132227 A1 7/2003 Geisler

(56) **References Cited**

U.S. PATENT DOCUMENTS

2003/0134347 A1 7/2003 Heller et al.
2003/0143746 A1 7/2003 Sage
2003/0153821 A1 8/2003 Berner
2003/0176183 A1 9/2003 Drucker et al.
2003/0187338 A1 10/2003 Say et al.
2003/0188427 A1 10/2003 Say et al.
2003/0199744 A1 10/2003 Buse et al.
2003/0199745 A1 10/2003 Burson et al.
2003/0211050 A1 11/2003 Majeti et al.
2003/0211625 A1 11/2003 Cohan
2003/0212317 A1 11/2003 Kovatchev et al.
2003/0212346 A1 11/2003 Yuzhakov et al.
2003/0212347 A1 11/2003 Sohrab
2003/0225324 A1 12/2003 Anderson et al.
2003/0225437 A1 12/2003 Ferguson
2003/0235817 A1 12/2003 Bartkowiak et al.
2004/0006263 A1 1/2004 Anderson et al.
2004/0010207 A1 1/2004 Flaherty et al.
2004/0011671 A1 1/2004 Shults et al.
2004/0015063 A1 1/2004 DeNuzzio et al.
2004/0015134 A1 1/2004 Lavi et al.
2004/0023253 A1 2/2004 Kunwar et al.
2004/0023317 A1 2/2004 Motamedi et al.
2004/0024327 A1 2/2004 Brodnick
2004/0030285 A1 2/2004 Lavi et al.
2004/0039298 A1 2/2004 Abreu
2004/0039406 A1 2/2004 Jessen
2004/0045879 A1 3/2004 Shults et al.
2004/0054352 A1 3/2004 Adams et al.
2004/0068230 A1 4/2004 Estes et al.
2004/0074785 A1 4/2004 Holker
2004/0078219 A1 4/2004 Kaylor
2004/0106857 A1 6/2004 Gough
2004/0138543 A1 7/2004 Russell et al.
2004/0143173 A1 7/2004 Reghabi et al.
2004/0146909 A1 7/2004 Duong et al.
2004/0152187 A1 8/2004 Haight et al.
2004/0152622 A1 8/2004 Keith et al.
2004/0167801 A1 8/2004 Say et al.
2004/0173472 A1 9/2004 Jung et al.
2004/0176672 A1 9/2004 Silver et al.
2004/0180391 A1 9/2004 Gratzl et al.
2004/0186362 A1 9/2004 Brauker et al.
2004/0186365 A1 9/2004 Jin et al.
2004/0193025 A1 9/2004 Steil et al.
2004/0199059 A1 10/2004 Brauker et al.
2004/0204687 A1 10/2004 Mogensen
2004/0224001 A1 11/2004 Pacetti et al.
2004/0248282 A1 12/2004 Sobha et al.
2004/0253365 A1 12/2004 Warren et al.
2004/0254433 A1 12/2004 Bandis
2005/0003399 A1 1/2005 Blackburn et al.
2005/0010265 A1 1/2005 Baru Fassio et al.
2005/0027180 A1 2/2005 Goode et al.
2005/0027181 A1 2/2005 Goode et al.
2005/0027182 A1 2/2005 Siddiqui et al.
2005/0027463 A1 2/2005 Goode et al.
2005/0031689 A1 2/2005 Shults et al.
2005/0033132 A1 2/2005 Shults et al.
2005/0043598 A1 2/2005 Goode et al.
2005/0051427 A1 3/2005 Brauker et al.
2005/0051440 A1 3/2005 Simpson et al.
2005/0054909 A1 3/2005 Petisce et al.
2005/0056552 A1 3/2005 Simpson et al.
2005/0065464 A1 3/2005 Talbot et al.
2005/0077584 A1 4/2005 Uhland et al.
2005/0090607 A1 4/2005 Tapsak et al.
2005/0096519 A1 5/2005 DeNuzzio et al.
2005/0101847 A1 5/2005 Routt et al.
2005/0107677 A1 5/2005 Ward et al.
2005/0112169 A1 5/2005 Brauker et al.
2005/0113653 A1 5/2005 Fox et al.
2005/0115832 A1 6/2005 Simpson et al.
2005/0118344 A1 6/2005 Pacetti
2005/0119720 A1 6/2005 Gale et al.
2005/0121322 A1 6/2005 Say
2005/0124873 A1 6/2005 Shults et al.
2005/0131305 A1 6/2005 Danielson et al.
2005/0139489 A1 6/2005 Davies et al.
2005/0143635 A1 6/2005 Kamath et al.
2005/0143675 A1 6/2005 Neel et al.
2005/0154271 A1 7/2005 Rasdal et al.
2005/0176136 A1 8/2005 Burd et al.
2005/0177036 A1 8/2005 Shults et al.
2005/0181012 A1 8/2005 Saint et al.
2005/0182451 A1 8/2005 Griffin et al.
2005/0183954 A1 8/2005 Hitchcock et al.
2005/0187720 A1 8/2005 Goode et al.
2005/0192557 A1 9/2005 Brauker et al.
2005/0197554 A1 9/2005 Polcha
2005/0203360 A1* 9/2005 Brauker A61B 5/1468 600/345
2005/0211571 A1 9/2005 Schulein et al.
2005/0215871 A1 9/2005 Feldman et al.
2005/0215872 A1 9/2005 Berner et al.
2005/0239154 A1 10/2005 Feldman et al.
2005/0242479 A1 11/2005 Petisce et al.
2005/0245795 A1 11/2005 Goode et al.
2005/0245799 A1 11/2005 Brauker et al.
2005/0251083 A1 11/2005 Carr-Brendel et al.
2005/0261563 A1 11/2005 Zhou et al.
2005/0288596 A1 12/2005 Eigler et al.
2006/0001550 A1 1/2006 Mann et al.
2006/0015020 A1 1/2006 Neale et al.
2006/0015024 A1 1/2006 Brister et al.
2006/0016700 A1 1/2006 Brister et al.
2006/0019327 A1 1/2006 Brister et al.
2006/0020186 A1 1/2006 Brister et al.
2006/0020187 A1 1/2006 Brister et al.
2006/0020188 A1 1/2006 Kamath et al.
2006/0020189 A1 1/2006 Brister et al.
2006/0020190 A1 1/2006 Kamath et al.
2006/0020191 A1 1/2006 Brister et al.
2006/0020192 A1 1/2006 Brister et al.
2006/0036139 A1 2/2006 Brister et al.
2006/0036140 A1 2/2006 Brister et al.
2006/0036141 A1 2/2006 Kamath et al.
2006/0036142 A1 2/2006 Brister et al.
2006/0036143 A1 2/2006 Brister et al.
2006/0036144 A1 2/2006 Brister et al.
2006/0036145 A1 2/2006 Brister et al.
2006/0040402 A1 2/2006 Brauker et al.
2006/0047095 A1 3/2006 Pacetti
2006/0052745 A1 3/2006 Van Antwerp et al.
2006/0067908 A1 3/2006 Ding
2006/0078908 A1 4/2006 Pitner et al.
2006/0079740 A1 4/2006 Silver et al.
2006/0079809 A1 4/2006 Goldberger et al.
2006/0094946 A1 5/2006 Kellogg et al.
2006/0100588 A1 5/2006 Brunnberg et al.
2006/0134165 A1 6/2006 Pacetti
2006/0171980 A1 8/2006 Helmus et al.
2006/0177379 A1 8/2006 Asgari
2006/0183871 A1 8/2006 Ward et al.
2006/0183984 A1 8/2006 Dobbles et al.
2006/0183985 A1 8/2006 Brister et al.
2006/0189863 A1 8/2006 Peyser et al.
2006/0195029 A1 8/2006 Shults et al.
2006/0222566 A1 10/2006 Brauker et al.
2006/0224141 A1 10/2006 Rush et al.
2006/0253085 A1 11/2006 Geismar et al.
2006/0258929 A1 11/2006 Goode et al.
2006/0263839 A1 11/2006 Ward et al.
2006/0269586 A1 11/2006 Pacetti
2006/0275857 A1 12/2006 Kjaer et al.
2007/0007133 A1 1/2007 Mang et al.
2007/0016381 A1 1/2007 Kamath et al.
2007/0027385 A1 2/2007 Brister et al.
2007/0032706 A1 2/2007 Kamath et al.
2007/0038044 A1 2/2007 Dobbles et al.
2007/0049873 A1 3/2007 Hansen et al.
2007/0066873 A1 3/2007 Kamath et al.
2007/0085995 A1 4/2007 Pesach et al.
2007/0116600 A1 5/2007 Kochar et al.

(56) **References Cited**

U.S. PATENT DOCUMENTS

2007/0129619 A1 6/2007 Ward et al.
2007/0129621 A1 6/2007 Kellogg et al.
2007/0135698 A1 6/2007 Shah et al.
2007/0135699 A1 6/2007 Ward et al.
2007/0151869 A1 7/2007 Heller et al.
2007/0173706 A1 7/2007 Neinast et al.
2007/0173710 A1 7/2007 Petisce et al.
2007/0197889 A1 8/2007 Brister et al.
2007/0200254 A1 8/2007 Curry
2007/0200267 A1 8/2007 Tsai
2007/0203407 A1 8/2007 Hoss et al.
2007/0203410 A1 8/2007 Say et al.
2007/0203966 A1 8/2007 Brauker et al.
2007/0206193 A1 9/2007 Pesach
2007/0208244 A1 9/2007 Brauker et al.
2007/0208245 A1 9/2007 Brauker et al.
2007/0208246 A1 9/2007 Brauker et al.
2007/0213610 A1 9/2007 Say et al.
2007/0218097 A1 9/2007 Heller et al.
2007/0219441 A1 9/2007 Carlin
2007/0225675 A1 9/2007 Robinson et al.
2007/0227907 A1 10/2007 Shah et al.
2007/0233013 A1 10/2007 Schoenberg
2007/0235331 A1 10/2007 Simpson et al.
2007/0240497 A1 10/2007 Robinson et al.
2007/0244381 A1 10/2007 Robinson et al.
2007/0244382 A1 10/2007 Robinson et al.
2007/0249916 A1 10/2007 Pesach et al.
2007/0275193 A1 11/2007 DeSimone et al.
2007/0299409 A1 12/2007 Whitbourne et al.
2008/0021666 A1 1/2008 Goode et al.
2008/0027301 A1 1/2008 Ward et al.
2008/0029390 A1 2/2008 Roche
2008/0029391 A1 2/2008 Mao et al.
2008/0033254 A1 2/2008 Kamath et al.
2008/0034972 A1 2/2008 Gough et al.
2008/0045824 A1 2/2008 Tapsak et al.
2008/0071157 A1 3/2008 McGarraugh et al.
2008/0071158 A1 3/2008 McGarraugh et al.
2008/0072663 A1 3/2008 Keenan et al.
2008/0086040 A1 4/2008 Heller et al.
2008/0086041 A1 4/2008 Heller et al.
2008/0086042 A1 4/2008 Brister et al.
2008/0086043 A1 4/2008 Heller et al.
2008/0086044 A1 4/2008 Brister et al.
2008/0086273 A1 4/2008 Shults et al.
2008/0091094 A1 4/2008 Heller et al.
2008/0091095 A1 4/2008 Heller et al.
2008/0108942 A1 5/2008 Brister et al.
2008/0119703 A1 5/2008 Brister et al.
2008/0119704 A1 5/2008 Brister et al.
2008/0119706 A1 5/2008 Brister et al.
2008/0125751 A1 5/2008 Fjield
2008/0154101 A1 6/2008 Jain et al.
2008/0183061 A1 7/2008 Goode et al.
2008/0183399 A1 7/2008 Goode et al.
2008/0187655 A1 8/2008 Markle et al.
2008/0188722 A1 8/2008 Markle et al.
2008/0188725 A1 8/2008 Markle et al.
2008/0188731 A1 8/2008 Brister et al.
2008/0189051 A1 8/2008 Goode et al.
2008/0194936 A1 8/2008 Goode et al.
2008/0194937 A1 8/2008 Goode et al.
2008/0195967 A1 8/2008 Goode et al.
2008/0197024 A1 8/2008 Simpson et al.
2008/0200788 A1 8/2008 Brister et al.
2008/0200789 A1 8/2008 Brister et al.
2008/0200791 A1 8/2008 Simpson et al.
2008/0208025 A1 8/2008 Shults et al.
2008/0210557 A1 9/2008 Heller et al.
2008/0214915 A1 9/2008 Brister et al.
2008/0262469 A1 10/2008 Brister et al.
2008/0287764 A1 11/2008 Rasdal et al.
2008/0287765 A1 11/2008 Rasdal et al.
2008/0287766 A1 11/2008 Rasdal et al.
2008/0296155 A1 12/2008 Shults et al.
2008/0305009 A1 12/2008 Gamsey et al.
2008/0305506 A1 12/2008 Suri
2008/0306368 A1 12/2008 Goode et al.
2008/0306434 A1 12/2008 Dobbles et al.
2008/0306435 A1 12/2008 Kamath et al.
2008/0306444 A1 12/2008 Brister et al.
2009/0012379 A1 1/2009 Goode et al.
2009/0018418 A1 1/2009 Markle et al.
2009/0018424 A1 1/2009 Kamath et al.
2009/0018426 A1 1/2009 Markle et al.
2009/0036758 A1 2/2009 Brauker et al.
2009/0043181 A1 2/2009 Brauker et al.
2009/0043182 A1 2/2009 Brauker et al.
2009/0043525 A1 2/2009 Brauker et al.
2009/0043541 A1 2/2009 Brauker et al.
2009/0043542 A1 2/2009 Brauker et al.
2009/0061528 A1 3/2009 Suri
2009/0062635 A1 3/2009 Brauker et al.
2009/0076356 A1 3/2009 Simpson
2009/0076360 A1 3/2009 Brister et al.
2009/0076361 A1 3/2009 Kamath et al.
2009/0081803 A1 3/2009 Gamsey et al.
2009/0099434 A1 4/2009 Liu et al.
2009/0124877 A1 5/2009 Goode, Jr. et al.
2009/0124878 A1 5/2009 Goode, Jr. et al.
2009/0124964 A1 5/2009 Leach et al.
2009/0131768 A1 5/2009 Simpson et al.
2009/0131769 A1 5/2009 Leach et al.
2009/0131776 A1 5/2009 Simpson et al.
2009/0131777 A1 5/2009 Simpson et al.
2009/0137886 A1 5/2009 Shariati et al.
2009/0137887 A1 5/2009 Shariati et al.
2009/0143659 A1 6/2009 Li et al.
2009/0156924 A1 6/2009 Shariati et al.
2009/0177143 A1 7/2009 Markle et al.
2009/0178459 A1 7/2009 Li et al.
2009/0182217 A1 7/2009 Li et al.
2009/0192366 A1 7/2009 Mensinger et al.
2009/0192380 A1 7/2009 Shariati et al.
2009/0192722 A1 7/2009 Shariati et al.
2009/0192724 A1 7/2009 Brauker et al.
2009/0192745 A1 7/2009 Kamath et al.
2009/0192751 A1 7/2009 Kamath et al.
2009/0203981 A1 8/2009 Brauker et al.
2009/0204341 A1 8/2009 Brauker et al.
2009/0216103 A1 8/2009 Brister et al.
2009/0240120 A1 9/2009 Mensinger et al.
2009/0240128 A1 9/2009 Mensinger et al.
2009/0240193 A1 9/2009 Mensinger et al.
2009/0242399 A1 10/2009 Kamath et al.
2009/0242425 A1 10/2009 Kamath et al.
2009/0264719 A1 10/2009 Markle et al.
2009/0287074 A1 11/2009 Shults et al.
2009/0299155 A1 12/2009 Yang et al.
2009/0299156 A1 12/2009 Simpson et al.
2009/0299162 A1 12/2009 Brauker et al.
2009/0299276 A1 12/2009 Brauker et al.
2010/0010324 A1 1/2010 Brauker et al.
2010/0010331 A1 1/2010 Brauker et al.
2010/0010332 A1 1/2010 Brauker et al.
2010/0016687 A1 1/2010 Brauker et al.
2010/0022855 A1 1/2010 Brauker et al.
2010/0030053 A1 2/2010 Goode, Jr. et al.
2010/0030484 A1 2/2010 Brauker et al.
2010/0036215 A1 2/2010 Goode, Jr. et al.
2010/0036216 A1 2/2010 Goode, Jr. et al.
2010/0036222 A1 2/2010 Goode, Jr. et al.
2010/0036223 A1 2/2010 Goode, Jr. et al.
2010/0036224 A1 2/2010 Goode, Jr. et al.
2010/0036225 A1 2/2010 Goode, Jr. et al.
2010/0041971 A1 2/2010 Goode, Jr. et al.
2010/0045465 A1 2/2010 Brauker et al.
2010/0049024 A1 2/2010 Saint et al.
2010/0076283 A1 3/2010 Simpson et al.
2010/0081908 A1 4/2010 Dobbles et al.

(56) **References Cited**

U.S. PATENT DOCUMENTS

2010/0081910	A1	4/2010	Brister et al.
2010/0161269	A1	6/2010	Kamath et al.

FOREIGN PATENT DOCUMENTS

EP	0 320 109	6/1989
EP	0 353 328	2/1990
EP	0 390 390	10/1990
EP	0 396 788	11/1990
EP	0 441 394	8/1991
EP	0 535 898	4/1993
EP	0 539 751	5/1993
EP	0 563 795	10/1993
EP	0 747 069	12/1996
EP	0 776 628	6/1997
EP	0 817 809	1/1998
EP	0 838 230	4/1998
EP	0 880 936	12/1998
EP	0 885 932	12/1998
EP	0 967 788	12/1999
EP	1 078 258	2/2001
EP	1 153 571	11/2001
EP	1 266 607	12/2002
EP	1 571 582	9/2005
FR	2656423	6/1991
FR	2760962	9/1998
GB	1 442 303	7/1976
GB	2149918	6/1985
JP	62083649	4/1987
JP	07-083871	3/1995
JP	2002-189015	7/2002
WO	WO 89/02720	4/1989
WO	WO 90/00738	1/1990
WO	WO 90/10861	9/1990
WO	WO 90/13021	11/1990
WO	WO 91/16416	10/1991
WO	WO 92/13271	8/1992
WO	WO 93/14693	8/1993
WO	WO 93/23744	11/1993
WO	WO 94/22367	10/1994
WO	WO 95/13838	5/1995
WO	WO 96/01611	1/1996
WO	WO 96/03117	2/1996
WO	WO 96/14026	5/1996
WO	WO 96/25089	8/1996
WO	WO 96/30431	10/1996
WO	WO 96/32076	10/1996
WO	WO 96/37246	11/1996
WO	WO 97/01986	1/1997
WO	WO 97/06727	2/1997
WO	WO 97/19188	5/1997
WO	WO 97/28737	8/1997
WO	WO 97/43633	11/1997
WO	WO 98/24358	6/1998
WO	WO 99/56613	4/1999
WO	WO 99/48419	9/1999
WO	WO 00/19887	4/2000
WO	WO 00/32098	6/2000
WO	WO 00/33065	6/2000
WO	WO 00/59373	10/2000
WO	WO 00/74753	12/2000
WO	WO 01/12158	2/2001
WO	WO 01/20019	3/2001
WO	WO 01/20334	3/2001
WO	WO 01/34243	5/2001
WO	WO 01/43660	6/2001
WO	WO 01/52727	7/2001
WO	WO 01/58348	8/2001
WO	WO 01/68901	9/2001
WO	WO 01/69222	9/2001
WO	WO 01/88524	11/2001
WO	WO 01/88534	11/2001
WO	WO 02/24065	3/2002
WO	WO 02/082989	10/2002
WO	WO 02/100266	12/2002
WO	WO 03/022125	3/2003
WO	WO 03/072269	9/2003
WO	WO 2005/032400	4/2005
WO	WO 2005/057168	6/2005
WO	WO 2005/057175	6/2005
WO	WO 2005/026689	10/2005
WO	WO 2006/017358	2/2006
WO	WO 2006/105146	10/2006
WO	WO 2007/002209	1/2007
WO	WO 2008/001091	1/2008

OTHER PUBLICATIONS

Aalders et al. 1991. Development of a wearable glucose sensor; studies in healthy volunteers and in diabetic patients. The International Journal of Artificial Organs 14(2):102-108.

Abe et al. 1992. Characterization of glucose microsensors for intracellular measurements. Alan. Chem. 64(18):2160-2163.

Abel et al. 1984. Experience with an implantable glucose sensor as a prerequisite of an artificial beta cell, Biomed. Biochim. Acta 43(5):577-584.

Abel et al. 2002. Biosensors for in vivo glucose measurement: can we cross the experimental stage. Biosens Bioelectron 17:1059-1070.

Adilman, Glenn, Videogames: Knowing the Score, Creative Computing, V9, p. 224(5), Dec. 1983, Dialog: File 148, Acc# 01891055.

Amin et al. 2003. Hypoglycemia prevalence in prepubertal children with type 1 diabetes on standard insulin regimen: Use of continuous glucose monitoring system. Diabetes Care 26(3):662-667.

Answers.com. "xenogenic." The American Heritage Stedman's Medical Dictionary. Houghton Mifflin Company, 2002. Answers.com Nov. 7, 2006 http://www. Answers.com/topic/xenogenic.

Armour et al. Dec. 1990. Application of Chronic Intravascular Blood Glucose Sensor in Dogs. Diabetes 39:1519-1526.

Asberg et al. 2003. Hydrogels of a Conducting Conjugated Polymer as 3-D Enzyme Electrode. Biosensors Bioelectronics. pp. 199-207.

Atanasov et al. 1994. Biosensor for continuous glucose monitoring. Biotechnology and Bioengineering 43:262-266.

Atanasov et al. 1997. Implantation of a refillable glucose monitoring-telemetry device. Biosens Bioelectron 12:669-680.

Aussedat et al. 1997. A user-friendly method for calibrating a subcutaneous glucose sensor-based hypoglycaemic alarm. Biosensors & Bioelectronics 12(11):1061-1071.

Bailey et al. 2007. Reduction in hemoglobin A1c with real-time continuous glucose monitoring: results from a 12-week observational study. Diabetes Technology & Therapeutics 9(3):203-210.

Baker et al. 1993. Dynamic concentration challenges for biosensor characterization. Biosensors & Bioelectronics 8:433-441.

Baker et al. 1996. Dynamic delay and maximal dynamic error in continuous biosensors. Anal Chem 68(8):1292-1297.

Bani Amer, M. M. 2002. An accurate amperometric glucose sensor based glucometer with eliminated cross-sensitivity. J Med Eng Technol 26(5):208-213.

Bard et al. 1980. Electrochemical Methods. John Wiley & Sons, pp. 173-175.

Beach et al. 1999. Subminiature implantable potentiostat and modified commercial telemetry device for remote glucose monitoring. IEEE Transactions on Instrumentation and Measurement 48(6):1239-1245.

Bellucci et al. Jan. 1986. Electrochemical behaviour of graphite-epoxy composite materials (GECM) in aqueous salt solutions, Journal of Applied Electrochemistry, 16(1):15-22.

Bessman et al., Progress toward a glucose sensor for the artificial pancreas, Proceedings of a Workshop on Ion-Selective Microelectrodes, Jun. 4-5, 1973, Boston, MA, 189-197.

Biermann et al. 2008. How would patients behave if they were continually informed of their blood glucose levels? A simulation study using a "virtual" patient. Diab. Thechnol. & Therapeut., 10:178-187.

Bindra et al. 1989. Pulsed amperometric detection of glucose in biological fluids at a surface-modified gold electrode. Anal Chem 61:2566-2570.

(56) **References Cited**

OTHER PUBLICATIONS

Bindra et al. 1991. Design and In Vitro Studies of a Needle-Type Glucose Senso for Subcutaneous Monitoring. Anal. Chem 63:1692-96.
Bisenberger et al. 1995. A triple-step potential waveform at enzyme multisensors with thick-film gold electrodes for detection of glucose and sucrose. Sensors and Actuators, B 28:181-189.
Bland et al. 1986. Statistical methods for assessing agreement between two methods of clinical measurement. Lancet 1:307-310.
Bland et al. 1990. A note on the use of the intraclass correlation coefficient in the evaluation of agreement between two methods of measurement. Comput. Biol. Med. 20(5):337-340.
Bobbioni-Harsch et al. 1993. Lifespan of subcutaneous glucose sensors and their performances during dynamic glycaemia changes in rats, J. Biomed. Eng. 15:457-463.
Bode et al. 1999. Continuous glucose monitoring used to adjust diabetes therapy improves glycosylated hemoglobin: A pilot study. Diabetes Research and Clinical Practice 46:183-190.
Bode et al. 2000. Using the continuous glucose monitoring system to improve the management of type 1 diabetes. Diabetes Technology & Therapeutics, 2(Suppl 1):S43-48.
Bode, B. W. 2000. Clinical utility of the continuous glucose monitoring system. Diabetes Technol Ther, 2(Suppl 1):S35-41.
Boland et al. 2001. Limitations of conventional methods of self-monitoring of blood glucose. Diabetes Care 24(11):1858-1862.
Bolinder et al. 1992. Microdialysis measurement of the absolute glucose concentration in subcutaneous adipose tissue allowing glucose monitoring in diabetic patients. Diabetologia 35:1177-1180.
Bolinder et al. 1997. Self-monitoring of blood glucose in type 1 diabetic patients: Comparison with continuous microdialysis measurements of glucose in subcutaneous adipose tissue during ordinary life conditions. Diabetes Care 20(1):64-70.
Bott, A. W. 1997. A Comparison of Cyclic Voltammetry and Cyclic Staircase Voltammetry Current Separations 16:1, 23-26.
Bott, A. 1998. Electrochemical methods for the determination of glucose. Current Separations 17(1):25-31.
Bowman, L.; Meindl, J. D. 1986. The packaging of implantable integrated sensors. IEEE Trans Biomed Eng BME33(2):248-255.
Brauker et al. 1995. Neovascularization of synthetic membranes directed by membrane Microarchitecture. J. Biomed Mater Res 29:1517-1524.
Brauker et al. Jun. 27, 1996. Local Inflammatory Response Around Diffusion Chambers Containing Xenografts Transplantation 61(12):1671-1677.
Brauker et al. 1998. Sustained expression of high levels of human factor IX from human cells implanted within an immunoisolation device into athymic rodents. Hum Gene Ther 9:879-888.
Brauker et al. 2001. Unraveling Mysteries at the Biointerface: Molecular Mediator of Inhibition of Blood vessel Formation in the Foreign Body Capsule Revealed. Surfacts Biomaterials 6. 1;5.
Braunwald, 2008. Biomarkers in heart failure. N. Engl. J. Med., 358: 2148-2159.
Bremer et al. 1999. Is blood glucose predictable from previous values? A solicitation for data. Diabetes 48:445-451.
Bremer et al. 2001. Benchmark data from the literature for evaluation of new glucose sensing technologies. Diabetes Technology & Therapeutics 3(3):409-418.
Brooks et al. "Development of an on-line glucose sensor for fermentation monitoring," Biosensors, 3:45-56 (1987/88).
Bruckel et al. 1989. In vivo measurement of subcutaneous glucose concentrations with an enzymatic glucose sensor and a wick method. Klin Wochenschr 67:491-495.
Brunner et al. 1998. Validation of home blood glucose meters with respect to clinical and analytical approaches. Diabetes Care 21(4):585-590.
Brunstein et al. 1989. Preparation and validation of implantable electrodes for the measurement of oxygen and glucose. Biomed Biochim. Acta 48(11/12):911-917.
Cai et al. 2004. A wireless, remote query glucose biosensor based on a pH-sensitive polymer. Anal Chem 76(4):4038-4043.
Cameron et al. 1997. Micromodular Implants to provide electrical stimulation of paralyzed muscles and limbs. IEEE Transactions on Biomedical Engineering 44(9):781-790.
Campanella et al. 1993. Biosensor for direct determination of glucose and lactate in undiluted biological fluids. Biosensors & Bioelectronics 8:307-314.
Candas et al (1994). "An adaptive plasma glucose controller basedon on a nonlinear insulin/glucose model." IEEE Transactions on Biomedical Engineering, 41(2): 116-124.
Cass et al. "Ferrocene-mediated enzyme electrodes for amperometric determination of glucose," Anal. Chem., 36:667-71 (1984).
Cassidy et al., Apr. 1993. Novel electrochemical device for the detection of cholesterol or glucose, Analyst, 118:415-418.
Cellulose Acetate Product Description, Product No. 419028, Sigma-Aldrich Corp., St. Louis, MO. 2005.
Chase et al. 2001. Continuous subcutaneous glucose monitoring in children with type 1 diabetes. Pediatrics 107:222-226.
Chen et al. 2002. Defining the period of recovery of the glucose concentration after its local perturbation by the implantation of a miniature sensor. Clin. Chem. Lab. Med. 40:786-789.
Chen et al. 2006. A noninterference polypyrrole glucose biosensor. Biosensors and Bioelectronics 22:639-643.
Chia et al. 2004. Glucose sensors: toward closed loop insulin delivery. Endocrinol Metab Clin North Am 33:175-95.
Choleau et al. 2002. Calibration of a subcutaneous amperometric glucose sensor implanted for 7 days in diabetic patients. Part 1. Effect of measurement uncertainties on the determination of sensor sensitivity and background current. Biosensors and Bioelectronics 17:641-646.
Choleau et al. 2002. Calibration of a subcutaneous amperometric glucose sensor implanted for 7 days in diabetic patients. Part 2. Superiority of the one-point calibration method. Biosensors and Bioelectronics 17:647-654.
Ciba® Irgacure® 2959 Photoinitiator, Product Description. Apr. 2, 1998. Ciba Specialty Chemicals Inc., Basel, Switzerland. 3 pages.
Claremont et al. 1986. Subcutaneous implantation of a ferrocene-mediated glucose sensor in pigs. Diabetologia 29:817-821.
Claremont et al. Jul. 1986. Potentially-implntable, ferrocene-mediated glucose sensor. J. Biomed. Eng. 8:272-274.
Clark et al. 1981. One-minute electrochemical enzymic assay for cholesterol in biological materials, Clin. Chem. 27(12):1978-1982.
Clark et al. 1987. Configurational cyclic voltammetry: increasing the specificity and reliablity of implanted electrodes, IEEE/Ninth Annual Conference of the Engineering in Medicine and Biology Society, pp. 0782-0783.
Clark et al. 1988. Long-term stability of electroenzymatic glucose sensors implanted in mice. Trans Am Soc Artif Intern Organs 34:259-265.
Clarke et al. Sep.-Oct. 1987. Evaluating Clinical Accuracy of Systems for Self-Monitoring of Blood Glucose. Diabetes Care 10(5):622-628.
CLSI. Performance metrics for continuous interstitial glucose monitoring; approved guideline, CLSI document POCT05-A. Wayne, PA: Clinical and Laboratory Standards Institute: 2008 28(33), 72 pp.
Colangelo et al. 1967. Corrosion rate measurements in vivo, Journal of Biomedical Materials Research, 1:405-414.
Colowick et al. 1976. Methods in Enzymlology, vol. XLIV, Immobilized Enzymes. New York: Academic Press.
Cox et al. 1985. Accuracy of perceiving blood glucose in IDDM. Diabetes Care 8(6):529-536.
Csöregi et al. 1994. Amperometric microbiosensors for detection of hydrogen peroxide and glucose based on peroxidase-modified carbon fibers. Electroanalysis 6:925-933.
Csöregi et al., 1994. Design, characterization, and one-point in vivo calibration of a subcutaneously implanted glucose electrode. Anal Chem. 66(19):3131-3138.
Currie et al., Novel non-intrusive trans-dermal remote wireless micro-fluidic monitoring systme applied to continuous glucose and lactate assays for casualty care and combat readiness assessment, RTO HFM Symposium, St. Pete Beach, RTO-MP-HFM-109, Aug. 16-18, 2004, 18 pp.

(56) **References Cited**

OTHER PUBLICATIONS

Dai et al. 1999. Hydrogel Membranes with Mesh Size Asymmetry Based on the Gradient Crosslink of Poly(vinyl alcohol). Journal of Membrane Science 156:67-79.
Danielsson et al. 1988. Enzyme thermistors, Methods in Enzymology, 137:181-197.
D'Arrigo et al. 2003. Porous-Si based bioreactors for glucose monitoring and drugs production. Proc. of SPIE 4982:178-184.
Dassau et al., In silico evaluation platform for artifical pancreatic β-cell development—a dynamic simulator for closed loop control with hardware-in-the-loop, Diabetes Technology & Therapeutics, 11(3):1-8, 2009.
Davies, et al. 1992. Polymer membranes in clinical sensor applications. I. An overview of membrane function, Biomaterials, 13(14):971-978.
Davis et al. 1983. Bioelectrochemical fuel cell and sensor based on a quinoprotein, alcohol dehydrogenase. Enzyme Microb. Technol., vol. 5, September, 383-388.
Deutsch et al., "Time series analysis and control of blood glucose levels in diabetic patients". Computer Methods and Programs in Biomedicine 41 (1994) 167-182.
Diabetes Educational Video Game Recognized by Software Publishers Association, Press Release, Novo Nordisk, Mar. 14, 1994.
Direct 30/30® Blood Glucose Sensor, (Markwell Medical) Catalog, © 1990, ELCO Diagnostics Company. 1 page.
Dixon et al. 2002. Characterization in vitro and in vivo of the oxygen dependence of an enzyme/polymer biosensor for monitoring brain glucose. Journal of Neuroscience Methods 119:135-142.
DuPont Dimension AR®. 1998. The chemistry analyzer that makes the most of your time, money and effort. Catalog. Dade International, Chemistry Systems. Newark, DE. 18 pages.
Durliat et al. 1976. Spectrophotometric and electrochemical determinations of L(+)-lactate in blood by use of lactate dehydrogenase from yeast, Clin. Chem. 22(11):1802-1805.
Edwards Lifesciences. Accuracy for you and your patients. Marketing materials, 4 pp. 2002.
El Deheigy et al. 1986. Optimization of an implantable coated wire glucose sensor. J. Biomed Eng. 8: 121-129.
El-Khatib et al. 2007. Adaptive closed-loop control provides blood-glucose regulation using dual subcutaneous insulin and glucagon infusion in diabetic swine, Journal of Diabetes Science and Technology, 1(2):181-192.
Ei-Sa'ad et al. 1990. Moisture Absorption by Epoxy Resins: the Reverse Thermal Effect. Journal of Materials Science 25:3577-3582.
Ernst et al. 2002. Reliable glucose monitoring through the use of microsystem technology. Anal. Bioanal. Chem. 373:758-761.
Fabietti et al. 2007. Clinical validation of a new control-oriented model of insulin and glucose dynamcs in subjects with type 1 diabetes, Diabetes Technology & Therapeutics, 9(4):327-338.
Fahy et al., An analysis: hyperglycemic intensive care patients need continuous glocuse monitoring—easier said than done, Journal of Diabetese Science and Technology, 2(2):201-204, Mar. 2008.
Fare et al. 1998. Functional characterization of a conducting polymer-based immunoassay system. Biosensors & Bioelectronics 13(3-4):459-470.
Feldman et al. 2003. A continuous glucose sensor based on wired enzyme technology—results from a 3-day trial in patients with type 1 diabetes. Diabetes Technol Ther 5(5):769-779.
Fischer et al. 1987. Assessment of subcutaneous glucose concentration: validation of the wick technique as a reference for implanted electrochemical sensors in normal and diabetic dogs, Diabetologia 30:940-945.
Fischer et al. 1989. Oxygen Tension at the Subcutaneous Implantation Site of Glucose Sensors. Biomed. Biochem 11/12:965-972.
Fischer et al. 1995. Abstract: Hypoglycaemia-warning by means of subcutaneous electrochemical glucose sensors: an animal study, Horm. Metab. Rese. 27:53.
Freiberger, Paul, Video Game Takes on Diabetes Superhero 'Captain Novolin' Offers Treatment Tips, San Francisco Examiner, Jun. 26, 1992, Fourth Edition, Business Sec. B1.
Frohnauer et al. 2001. Graphical human insulin time-activity profiles using standardized definitions. Diabetes Technology & Therapeutics 3(3):419-429.
Frost et al. 2002. Implantable chemical sensors for real-time clinical monitoring: Progress and challenges. Current Opinion in Chemical Biology 6:633-641.
Gabbay et al. 2008. Optical coherence tomography-based continuous noninvasive glucose monitoring in patients with diabetes. Diab. Thechnol. & Therapeut., 10:188-193.
Ganesan et al., Gold layer-based dual crosslinking procedure of glucose oxidase with ferrocene monocarboxylic acid provides a stable biosensor, Analytical Biochemistry 343:188-191, 2005.
Ganesh et al., Evaluation of the VIA® blood chemistry monitor for glucose in healthy and diabetic volunteers, Journal of Diabetese Science and Technology, 2(2):182-193, Mar. 2008.
Garg et al. 1999. Correlation of fingerstick blood glucose measurements with GlucoWatch biographer glucose results in young subjects with type 1 diabetes. Diabetes Care 22(10):1708-1714.
Garg et al. 2004. Improved Glucose Excursions Using an Implantable Real-Time continuous Glucose Sensor in Adults with Type I Diabetes. Diabetes Care 27:734-738.
Geller et al. 1997. Use of an immunoisolation device for cell transplantation and tumor immunotherapy. Ann NY Acad Sci 831:438-451.
Gerritsen et al. 1999. Performance of subcutaneously implanted glucose sensors for continuous monitoring. The Netherlands Journal of Medicine 54:167-179.
Gerritsen et al. 2001. Influence of inflammatory cells and serum on the performance of implantable glucose sensors. J Biomed Mater Res 54:69-75.
Gerritsen, M. 2000. Problems associated with subcutaneously implanted glucose sensors. Diabetes Care 23(2):143-145.
Gilligan et al. 1994. Evaluation of a subcutaneous glucose sensor out to 3 months in a dog model. Diabetes Care 17(8):882-887.
Gilligan et al. 2004, Feasibility of continuous long-term glucose monitoring from a subcutaneous glucose sensor in humans. Diabetes Technol Ther 6:378-386.
Godsland et al. 2001. Maximizing the Success Rate of Minimal Model Insulin Sensitivity Measurement in Humans: The Importance of Basal Glucose Levels. The Biochemical Society and the Medical Research Society, 1-9.
Gouda et al., Jul. 4, 2003. Thermal inactiviation of glucose oxidase, The Journal of Biological Chemistry, 278(27):24324-24333.
Gough et al. 2000. Immobilized glucose oxidase in implantable glucose sensor technology. Diabetes Technology & Therapeutics 2(3):377-380.
Gough et al. 2003. Frequency characterization of blood glucose dynamics. Annals of Biomedical Engineering 31:91-97.
Gregg et al. 1990. Cross-Linked Redox Gels Containing Glucose Oxidase for Amperometric Biosensor Applications. Anal. Chem. 62:258-263.
Gross et al. 2000. Efficacy and reliability of the continuous glucose monitoring system. Diabetes Technology & Therapeutics, 2(Suppl 1):S19-26.
Gross et al. 2000. Performance evaluation of the MiniMed® continuous glucose monitoring system during patient home use. Diabetes Technology & Therapeutics 2(1):49-56.
Guerci et al., Clinical performance of CGMS in type 1 diabetic patients treated by continuous subcutaneous insulin infusion using insulin analogs, Diabetes Care, 26:582-589, 2003.
Hall et al. 1998. Electrochemical oxidation of hydrogen peroxide at platinum electrodes. Part I: An adsorption-controlled mechanism. Electrochimica Acta, 43(5-6):579-588.
Hall et al. 1998. Electrochemical oxidation of hydrogen peroxide at platinum electrodes. Part II: Effect of potential. Electrochimica Acta 43(14-15):2015-2024.
Hall et al. 1999. Electrochemical oxidation of hydrogen peroxide at platinum electrodes. Part III: Effect of temperature. Electrochimica Acta, 44:2455-2462.

(56) **References Cited**

OTHER PUBLICATIONS

Hall et al. 1999. Electrochemical oxidation of hydrogen peroxide at platinum electrodes. Part IV: Phosphate buffer dependence. Electrochimica Acta, 44:4573-4582.
Hall et al. 2000. Electrochemical oxidation of hydrogen peroxide at platinum electrodes. Part V: Inhibition by chloride. Electrochimica Acta, 45:3573-3579.
Harrison et al. 1988. Characterization of perfluorosulfonic acid polymer coated enzyme electrodes and a miniaturized integrated potentiostat for glucose analysis in whole blood. Anal. Chem. 60:2002-2007.
Hashiguchi et al. (1994). "Development of a miniaturized glucose monitoring system by combining a needle-type glucose sensor with microdialysis sampling method: Long-term subcutaneous tissue glucose monitoring in ambulatory diabetic patients," Diabetes Care, 17(5): 387-396.
Heise et al. 2003. Hypoglycemia warning signal and glucose sensors: Requirements and concepts. Diabetes Technology & Therapeutics 5:563-571.
Heller, "Electrical wiring of redox enzymes," Acc. Chem. Res., 23:128-134 (1990).
Heller, A. 1992. Electrical Connection of Enzyme Redox Centers to Electrodes. J. Phys. Chem. 96:3579-3587.
Heller, A. 1999. Implanted electrochemical glucose sensors for the management of diabetes. Annu Rev Biomed Eng 1:153-175.
Heller, A. 2003. Plugging metal connectors into enzymes. Nat Biotechnol 21:631-2.
Hicks, 1985. In Situ Monitoring, Clinical Chemistry, 31(12):1931-1935.
Hitchman, M. L. 1978. Measurement of Dissolved Oxygen. In Elving et al. (Eds.). Chemical Analysis, vol. 49, Chap. 3, pp. 34-49, 59-123. New York: John Wiley & Sons.
Hrapovic et al. 2003. Picoamperometric detection of glucose at ultrasmall platinum-based biosensors: preparation and characterization. Anal Chem 75:3308-3315.
http://www.merriam-webster.com/dictionary, definition for "aberrant," Aug. 19, 2008, p. 1.
Hu, et al. 1993. A needle-type enzyme-based lactate sensor for in vivo monitoring, Analytica Chimica Acta, 281:503-511.
Huang et al., Sep. 1997, A 0.5mW Passive Telemetry IC for Biomedical Applications, Proceedings of the 23rd European Solid-State Circuits Conference (ESSCIRC '97), pp. 172-175, Southampton, UK.
Huang et al. Aug. 1975. Electrochemical Generation of Oxygen. 1: The Effects of Anions and Cations on Hydrogen Chemisorption and Aniodic Oxide Film Formation on Platinum Electrode. 2: The Effects of Anions and Cations on Oxygen Generation on Platinum Electrode, pp. 1-116.
Hunter et al. Mar. 31, 2000. Minimally Invasive Glucose Sensor and Insulin Delivery System. MIT Home Automation and Healthcare Consortium. Progress Report No. 2-5. 17 pages.
Ishikawa et al. 1998. Initial evaluation of a 290-mm diameter subcutaneous glucose sensor: Glucose monitoring with a biocompatible, flexible-wire, enzyme-based amperometric microsensor in diabetic and nondiabetic humans. Journal of Diabetes and Its Complications, 12:295-301.
Jablecki et al. 2000. Simulations of the frequency response of implantable glucose sensors. Analytical Chemistry 72:1853-1859.
Jaremko et al. 1998. Advances toward the implantable artificial pancreas for treatment of diabetes. Diabetes Care 21(3):444-450.
Jensen et al. 1997. Fast wave forms for pulsed electrochemical detection of glucose by incorporation of reductive desorption of oxidation products. Analytical Chemistry 69(9):1776-1781.
Jeong et al. 2003. In vivo calibration of the subcutaneous amperometric glucose sensors using a non-enzyme electrode. Biosensors and Bioelectronics 19:313-319.
Jeutter et al. 1993. Design of a radio-linked implantable cochlear prosthesis using surface acoustic wave devices. IEEE Transactions on ultrasonics, ferroelectrics and frequency control 40(5):469-477.
Jeutter, D. C. 1982. A transcutaneous implanted battery recharging and biotelemeter power switching system. IEEE Trans Biomed Eng 29:314-321.
Johnson et al. 1992. In vivo evaluation of an electroenzymatic glucose sensor implanted in subcutaneous tissue. Biosensors & Bioelectronics, 7:709-714.
Joung et al. 1998. An energy transmission system for an artificial heart using leakage inductance compensation of transcutaneous transformer. IEEE Transactions on Power Electronics 13(6):1013-1022.
Jovanovic, L. 2000. The role of continuous glucose monitoring in gestational diabetes mellitus. Diabetes Technology & Therapeutics, 2 Suppl 1, S67-71.
Kacaniklic et al. May-Jun. 1994. Amperometric Biosensors for Detection of L- and D-Amino Acids Based on Coimmoblized Peroxidase and L- and D-Amino Acid Oxidases in Carbon Paste Electrodes. Electroanalysis, 6(5-6): 381-390.
Kamath et al. Calibration of a continuous glucose monitor: effect of glucose rate of change, Eighth Annual Diabetes Technology Meeting, Nov. 13-15, 2008, p. A88.
Kang et al. 2003. In vitro and short-term in vivo characteristics of a Kel-F thin film modified glucose sensor. Anal Sci 19:1481-1486.
Kargol et al. 2001. Studies on the structural properties of porous membranes: measurement of linear dimensions of solutes. Biophys Chem 91:263-271.
Karube et al. 1993. Microbiosensors for acetylcholine and glucose. Biosensors & Bioelectronics 8:219-228.
Kaufman et al. 2001. A pilot study of the continuous glucose monitoring system. Diabetes Care 24(12):2030-2034.
Kaufman. 2000. Role of the continuous glucose monitoring system in pediatric patients. Diabetes Technology & Therapeutics 2(1):S-49-S-52.
Kawagoe et al. 1991. Enzyme-modified organic conducting salt microelectrode, Anal. Chem. 63:2961-2965.
Keedy et al. 1991. Determination of urate in undiluted whole blood by enzyme electrode. Biosensors & Bioelectronics, 6: 491-499.
Kerner et al. "The function of a hydrogen peroxide-detecting electroenzymatic glucose electrode is markedly impaired in human sub-cutaneous tissue and plasma," Biosensors & Bioelectronics, 8:473-482 (1993).
Kerner et al. 1988. A potentially implantable enzyme electrode for amperometric measurement of glucose, Horm Metab Res Suppl. 20:8-13.
Kerner, W. 2001. Implantable glucose sensors: Present status and future developments. Exp. Clin. Endocrinol. Diabetes 109(Suppl 2):S341-346.
Kiechle, F.L. 2001. The impact of continuous glucose monitoring on hospital point-of-care testing programs. Diabetes Technol Ther 3:647-649.
Klueh et al. 2003. Use of Vascular Endothelia Cell Growth Factor Gene Transfer to Enhance Implantable Sensor Function in Vivo, Biosensor Function and Vegf-Gene Transfer, pp. 1072-1086.
Klueh et al. 2007. Inflammation and glucose sensors: use of dexamethasone to extend glucose sensor function and life span in vivo. Journal of Diabetes Science and Technology 1(4):496-504.
Kondo et al. 1982. A miniature glucose sensor, implantable in the blood stream. Diabetes Care. 5(3):218-221.
Koschinsky et al. 1988. New approach to technical and clinical evaluation of devices for self-monitoring of blood glucose. Diabetes Care 11(8): 619-619.
Koschinsky et al. 2001. Sensors for glucose monitoring: Technical and clinical aspects. Diabetes Metab. Res. Rev. 17:113-123.
Kost et al. 1985. Glucose-sensitive membranes containing glucose oxidase: activitiy, swelling, and permeability studies, Journal of Biomedical Materials Research 19:1117-1133.
Koudelka et al. 1989. In vivo response of microfabricated glucose sensors to glycemia changes in normal rats. Biomed Biochim Acta 48(11-12):953-956.
Koudelka et al. 1991. In-vivo behaviour of hypodermically implanted microfabricated glucose sensors. Biosensors & Bioelectronics 6:31-36.

(56) **References Cited**

OTHER PUBLICATIONS

Kovatchev et al. Aug. 2004. Evaluating the accuracy of continuous glucose-monitoring sensors: continuous glucose-error grid analysis illustrated by TheraSense Freestyle Navigator data. Diabetes Care 27(8):1922-1928.
Kraver et al. 2001. A mixed-signal sensor interface microinstrument. Sensors and Actuators A 91:266-277.
Krouwer, J. S. 2002. Setting performance goals and evaluating total analytical error for diagnostic assays. Clinical Chemistry 48(6):919-927.
Kruger et al. 2000. Psychological motivation and patient education: A role for continuous glucose monitoring. Diabetes Technology & Therapeutics, 2(Suppl 1):S93-97.
Kulys et al., 1994. Carbon-paste biosensors array for long-term glucose measurement, Biosensors& Beioelectronics, 9:491-500.
Kunjan et al., Automated blood sampling and glocuse sensing in critical care settings, Journal of Diabetes Science and Technology 2(3):194-200, Mar. 2008.
Kunzler et al. 1993. Hydrogels based on hydrophilic side chain siloxanes. Poly Mat Sci and Eng 69:226-227.
Kunzler et al. Aug. 21, 1995. Contact lens materials. Chemistry & Industry. 651-655.
Kurnik et al. 1999. Application of the mixtures of experts algorithm for signal processing in a noninvasive glucose monitoring system. Sensors and Actuators B, 60:19-26.
Kurtz et al. 2005. Recommendations for blood pressure measurement in humans and experimental animals, Part 2: Blood pressure measurement in experimental animals, a statement for professionals from the subcommittee of professional and public education of the American Heart Association Council on High Blood Pressure Research. Hypertension 45:299-310.
LaCourse et al. 1993. Optimization of waveforms for pulsed amperometric detection of carbohydrates based on pulsed voltammetry. Analytical Chemistry 65:50-52.
Ladd et al., Structure Determination by X-ray Crystallography, 3rd ed. Plenum, 1996, Ch. 1, pp. xxi-xxiv and 1-58.
Lee et al. 1999. Effects of pore size, void volume, and pore connectivity on tissue responses. Society for Biomaterials 25th Annual Meeting, 171.
Lehmann et al. May 1994. Retrospective valication of a physiological model of glucose-iunsulin interaaction in tyhpe 1 diabetes mellitus, Med. Eng. Phys. 16:193-202.
Lerner et al. 1984. An implantable electrochemical glucose sensor. Ann. N. Y. Acad. Sci. 428:263-278.
Lewandowski et al. 1988. Evaluation of a miniature blood glucose sensor. Trans Am Soc Artif Intern Organs 34:255-258.
Leypoldt et al. 1984. Model of a two-substrate enzyme electrode for glucose. Anal. Chem. 56:2896-2904.
Linke et al. 1994. Amperometric biosensor for in vivo glucose sensing based on glucose oxidase immobilized in a redox hydrogel. Biosensors & Bioelectronics 9:151-158.
Loffler et al. 1995. Separation and determination of traces of ammonia in air by means of chromatomembrane cells. Fresenius J Anal Chem 352:613-614.
Lohn et al., A knowledge-based system for real-time validation of calibrations and measurements, Chemometrics and Intelligent Laboratory Systems, 1999 46, 57-66.
Lowe, 1984. Biosensors, Trends in Biotechnology, 2(3):59-65.
Luong et al. 2004. Solubilization of Multiwall Carbon Nanotubes by 3-Aminopropyltriethoxysilane Towards the Fabrication of Electrochemical Biosensors with Promoted Electron Transfer. Electronanalysis 16(1-2):132-139.
Lyman D. 1960. Polyurethanes. I. The Solution Polymerization of Diisocyanates with Ethylene Glycol. J. Polymer Sci XLV:45:49.
Lynch et al. 2001. Estimation-based model predictive control of blood glucose in type I diabetics: A simulation study. Proceedings of the IEEE 27th Annual Northeast Bioengineering Conference, pp. 79-80.
Lynn, P. A. 1971. Recursive digital filters for biological signals. Med. & Biol. Engng. 9:37-43.
Madaras et al. 1996. Microfabricated amperometric creatine and creatinine biosensors. Analytica Chimica Acta 319:335-345.
Maidan et al. 1992. Elimination of Electrooxidizable Interferent-Produced Currents in Amperometric Biosensors, Analytical Chemistry, 64:2889-2896.
Makale et al. 2003. Tissue window chamber system for validation of implanted oxygen sensors. Am. J. Physiol. Heart Circ. Physiol. 284:H2288-2294.
Malin et al. 1999. Noninvasive Prediction of Glucose by Near-Infrared Diffuse Reflectance Spectroscopy. Clinical Chemistry 45:9, 1651-1658.
Mancy et al. 1962. A galvanic cell oxygen analyzer. Journal of Electroanalytical Chemistry 4:65-92.
Maran et al. 2002. Continuous subcutaneous glucose monitoring in diabetic patients: A multicenter analysis. Diabetes Care 25(2):347-352.
Mar., W. F. 2002. Dealing with the delay. Diabetes Technol Ther 4(1):49-50.
Marena et al. 1993. The artifical endocrine pancreas in clinical practice and research. Panminerva Medica 35(2):67-74.
Martin, R. F. 2000. General Deming regression for estimating systematic bias and its confidence interval in method-comparison studies. Clinical Chemistry, 46(1):100-104.
Mascini et al. 1989. Glucose electrochemical probe with extended linearity for whole blood. J Pharm Biomed Anal 7(12): 1507-1512.
Mastrototaro et al. "An electroenzymatic glucose sensor fabricated on a flexible substrate," Sensors and Actuators B, 5:139-44 (1991).
Mastrototaro et al. 2003. Reproducibility of the continuous glucose monitoring system matches previous reports and the intended use of the product. Diabetes Care 26:256; author reply p. 257.
Mastrototaro, J. J. 2000. The MiniMed continuous glucose monitoring system. Diabetes Technol Ther 2(Suppl 1):S13-8.
Matsuki. 1994. Energy transfer system utilizing amorphous wires for implantable medical devices. IEEE Transactions on Magnetics 31(2):1276-1282.
Matsumoto et al. 1998. A micro-planar amperometeric glucose sensor unsusceptible to interference species. Sensors and Actuators B 49:68-72.
Matsumoto et al. 2001. A long-term lifetime amperometric glucose sensor with a perfluorocarbon polymer coating. Biosens Bioelectron 16:271-276.
Matthews et al. 1988. An amperometric needle-type glucose sensor testing in rats and man. Diabetic Medicine 5:248-252.
Mazze et al. 2008. Characterizing glucose exposure for individuals with normal glucose tolerance using continuous glucose monitoring and ambulatory glucose profile analysis. Diab. Thechnol. & Therapeut., 10:149-159.
Mazzola et al., Video Diabetes: A Teaching Tool for Children with Insulin-Dependent Diabetes, Proceedings—7th Annual Symposium on Computer Applications in Medical Care; Washington, D.C.; Dialog:, (Oct. 1983), File 8, Acc# 01624462.
McCartney et al. 2001. Near-infrared fluorescence lifetime assay for serum glucose based on allophycocyanin-labeled concanavalin A. Anal Biochem 292:216-221.
McGrath et al. 1995. The use of differential measurements with a glucose biosensor for interference compensation during glucose determinations by flow injection analysis. Biosens Bioelectron 10:937-943.
McKean, et al. Jul. 7, 1988. A Telemetry Instrumentation System for Chronically Implanted Glucose and Oxygen Sensors. Transactions on Biomedical Engineering 35:526-532.
Memoli et al. 2002. A comparison between different immobilised glucoseoxidase-based electrodes. J Pharm Biomed Anal 29:1045-1052.
Merriam-Webster Online Dictionary. Apr. 23, 2007. Definition of "nominal". http://www.merriamwebster.com/dictionary/nominal.
Metzger et al. Jul. 2002. Reproducibility of glucose measurements using the glucose sensor. Diabetes Care 25(6):1185-1191.
Meyerhoff et al. 1992. On line continuous monitoring of subcutaneous tissue glucose in men by combining portable glucosensor with microdialysis. Diabetologia 35:1087-1092.

(56) **References Cited**

OTHER PUBLICATIONS

Miller, A. 1988. Human monocyte/macrophage activation and interleukin 1 generation by biomedical polymers. J Biomed Mater Res 23:713-731.
Miller et al. 1989. In vitro stimulation of fibroblast activity by factors generated from human monocytes activated by biomedical polymers. Journal of J Biomed Mater Res 23:911-930.
Miller et al. 1989. Generation of IL1-like activity in response to biomedical polymer implants: a comparison of in vitro and in vivo models. J Biomed Mater Res 23:1007-1026.
Miller et al. 1993. Development of an autotuned transcutaneous energy transfer system ASAIO Journal 39:M706-M710.
Moatti-Sirat et al. 1992. Towards continuous glucose monitoring: in vivo evaluation of a miniaturized glucose sensor implanted for several days in rat subcutaneous tissue. Diabetologia 35:224-230.
Moatti-Sirat et al., Reduction of acetaminophen interference in glucose sensors by a composite Nafion membrane: demonstration in rats and man, Diabetologia 37(6):610-616, Jun. 1994.
Moatti-Sirat, D et al. 1992. Evaluating in vitro and in vivo the interference of ascorbate and acetaminophen on glucose detection by a needle-type glucose sensor. Biosensors and Bioelectronics 7:345-352.
Monsod et al. 2002. Do sensor glucose levels accurately predict plasma glucose concentrations during hypoglycemia and hyperinsulinemia? Diabetes Care 25(5):889-893.
Morff et al. 1990. Microfabrication of reproducible, economical, electroenzymatic glucose sensors, Annual International Conference of the IEEE Engineering in Medicine and Biology Society, 12(2):0483-0484.
Mosbach et al. 1975. Determination of heat changes in the proximity of immobilized enzymes with an enzyme termistor and its use for the assay of metobolites, Biochim. Biophys. Acta. (Enzymology), 403:256-265.
Motonaka et al. 1993. Determination of cholesteral and cholesteral ester with novel enzyme microsensors, Anal. Chem. 65:3258-3261.
Moussy et al. 2000. Biomaterials community examines biosensor biocompatibility Diabetes Technol Ther 2:473-477.
Moussy et al. 1994. A miniaturized Nafion-based glucose sensor: In vitro and in vivo evaluation in dogs. Int. J. Artif. Organs 17(2):88-94.
Mowery et al. 2000. Preparation and characterization of hydrophobic polymeric films that are thromboresistant via nitric oxide release. Biomaterials 21:9-21.
Murphy, et al. 1992. Polymer membranes in clinical sensor applications. II. The design and fabrication of permselective hydrogels for electrochemical devices, Biomaterials, 13(14):979-990.
Muslu. 1991. Trickling filter performance. Apllied Biochemistry and Biotechnology 37:211-224.
Myler et al. 2002. Ultra-thin-polysiloxane-film-composite membranes for the optimisation of amperometric oxidase enzyme electrodes. Biosens Bioelectron 17:35-43.
Nafion® 117 Solution Product Description, Product No. 70160, Sigma-Aldrich Corp., St. Louis, MO. Downloaded from https://www.signaaldrich.com/cgi-bin/hsrun/Suite7/Suite/HAHTpage/Suite.HsExternal Prod . . . on Apr. 7, 2005.
Nakayama et al. 1992. Surface fixation of hydrogels: heparin and glucose oxidase hydrogelated surfaces. ASAIO Journal M421-M424.
Nam et al. 2000. A novel fabrication method of macroporous biodegradable polymer scaffolds using gas foaming salt as a porogen additive. J Biomed Mater Res 53:1-7.
Neuburger et al. 1987. Pulsed amperometric detection of carbohydrates at gold electrodes with a two-step potential waveform. Anal. Chem. 59:150-154.
Nintendo Healthcare, Wired, Dec. 1993.
Ohara et al. 1994. "Wired" enzyme electrodes for amperometric determination of glucose or lactate in the presence of interfering substances. Anal Chem 66:2451-2457.
Ohara, et al. Dec. 1993. Glucose electrodes based on cross-linked bis(2,2'bipyridine)chloroosmium(+/2+) complexed poly(1-vinylimidazole) films, Analytical Chemistry, 65:3512-3517.
Okuda et al. 1971. Mutarotase effect on micro determinations of D-glucose and its anomers with β-D-glucose oxidase. Anal Biochem 43:312-315.
Palmisano et al. 2000. Simultaneous monitoring of glucose and lactate by an interference and cross-talk free dual electrode amperometric biosensor based on electropolymerized thin films. Biosensors & Bioelectronics 15:531-539.
Panetti 2002. Differential effects of sphingosine 1-phosphate and lysophosphatidic acid on endothelial cells. Biochimica et Biophysica Acta 1582:190-196.
Panteleon et al. 2003. The role of the independent variable to glucose sensor calibration. Diabetes Technology & Therapeutics 5(3):401-410.
Parker et al. 1999. A model-based algorithm for blood glucose control in type I diabetic patients. IEEE Trans. Biomed. Eng. 46(2):148-157.
Patel et al. 2003. Amperometric glucose sensors based on ferrocene containing polymeric electron transfer systems—a preliminary report. Biosens Bioelectron 18:1073-6.
Pfeiffer et al. 1992. On line continuous monitoring of subcutaneous tissue glucose is feasible by combining portable glucosensor with microdialysis. Horm. Metab. Res. 25:121-124.
Pfeiffer, E.F. The glucose sensor: the missing link in diabetes therapy. 154-164.
Phillips et al. 1988. Bromedical Applications of Polyurethanes: Implications of Failure Mechanisms. J. Biomat. Appl. 3:202-227.
Phillips. 1995. A high capacity transcutaneous energy transmission system. ASAIO Journal 41:M259-M262.
Pichert et al. 2000. Issues for the coming age of continuous glucose monitoring Diabetes Educ 26(6):969-980.
Pickup et al. "Implantable glucose sensors: choosing the appropriate sensor strategy," Biosensors, 3:335-346 (1987/88).
Pickup et al. 1988. Progress towards in vivo glucose sensing with a ferrocene-mediated amperometric enzyme electrode. 34-36.
Pickup et al. "In vivo molecular sensing in diabetes mellitus: an implantable glucose sensor with direct electron transfer," Diabetologia, 32:213-217 (1989).
Pickup et al. 1989. Potentially-implantable, amperometric glucose sensors with mediated electron transfer: improving the operating stability. Biosensors 4:109-119.
Pickup et al. 1993. Responses and Calibration of Amperometric Glucose Sensors Implanted in the Subcutaneous Tissue of Man. ACTA Diabetol, pp. 143-148.
Pineda et al. 1996. Bone regeneration with resorbable polymeric membranes. III. Effect of poly(L-lactide) membrane pore size on the bone healing process in large defects. J. Biomedical Materials Research 31:385-394.
Pinner et al., Cross-linking of cellulose acetate by ionizing radiation, Nature, vol. 184, 1303-1304, Oct. 24, 1959.
Pishko et al. "Amperometric glucose microelectrodes prepared through immobilization of glucose oxidase in redox hydrogels," Anal. Chem., 63:2268-72 (1991).
Pitzer et al. 2001. Detection of hypoglycemia with the GlucoWatch biographer. Diabetes Care 24(5):881-885.
Poirier et al. 1998. Clinical and statistical evaluation of self-monitoring blood glucose meters. Diabetes Care 21(11):1919-1924.
Poitout et al. 1993. A glucose monitoring system for on line estimation in man of blood glucose concentration using a miniaturized glucose sensor implanted in the subcutaneous tissue and a wearable control unit. Diabetologia 36:658-663.
Poitout et al. 1994. Development of a glucose sensor for glucose monitoring in man: the disposable implant concept. Clinical Materials 15:241-246.
Poitout, et al. 1991. In Vitro and In Vivo Evaluation in Dogs of a Miniaturized Glucose Sensor, ASAIO Transactions, 37:M298-M300.
Postlethwaite et al. 1996. Interdigitated array electrode as an alternative to the rotated ring-disk electrode for determination of the reaction products of dioxygen reduction. Analytical Chemistry 68:2951-2958.

(56) **References Cited**

OTHER PUBLICATIONS

Prabhu et al. 1981. Electrochemical studies of hydrogen peroxide at a platinum disc electrode, Electrochimica Acta 26(6):725-729.
Quinn et al. 1995. Kinetics of glucose delivery to subcutaneous tissue in rats measured with 0.3-mm amperometric microsensors. The American Physiological Society E155-E161.
Quinn et al. 1997. Biocompatible, glucose-permeable hydrogel for in situ coating of implantable biosensors. Biomaterials 18:1665-1670.
Rabah et al., 1991. Electrochemical wear of graphite anodes during electrolysis of brine, Carbon, 29(2):165-171.
Ratner, B.D. 2002. Reducing capsular thickness and enhancing angiogenesis around implant drug release systems. J Control Release 78:211-218.
Raya Systems Pioneers Healthy Video Games, PlayRight, Nov. 1993 (pp. 14-15).
Reach et al. 1986. A Method for Evaluating in vivo the Functional Characteristics of Glucose Sensors. Biosensors 2:211-220.
Reach et al. 1992. Can continuous glucose monitoring be used for the treatment of diabetes? Analytical Chemistry 64(5):381-386.
Reach, G. 2001. Which threshold to detect hypoglycemia? Value of receiver-operator curve analysis to find a compromise between sensitivity and specificity. Diabetes Care 24(5):803-804.
Reach, Gerard. 2001. Letters to the Editor Re: Diabetes Technology & Therapeutics, 2000;2:49-56. Diabetes Technology & Therapeutics 3(1):129-130.
Rebrin et al. "Automated feedback control of subcutaneous glucose concentration in diabetic dogs," Diabetologia, 32:573-76 (1989).
Rebrin et al. 1992. Subcutaenous glucose monitoring by means of electrochemical sensors: fiction or reality? J. Biomed. Eng. 14:33-40.
Rebrin et al. 1999. Subcutaneous glucose predicts plasma glucose independent of insulin: Implications for continuous monitoring. Am. J. Physiol. 277:E561-71.
Rhodes et al. 1994. Prediction of pocket-portable and implantable glucose enzyme electrode performance from combined species permeability and digital simulation analysis. Analytical Chemistry 66(9):1520-1529.
Rigla et al. 2008. Real-time continuous glucose monitoring together with telemedical assitance improves glycemic control and glucose stability in pump-treated patients. Diab. Thechnol. & Therapeut., 10:194-199.
Rinken et al. 1998. Calibration of glucose biosensors by using pre-steady state kinetic data. Biosensors & Bioelectronics, 13:801-807.
Rivers et al., Central venous oxygen saturation monitoring in the critically ill patient, Current Opinion in Critical Care, 7:204-211, 2001.
Sachlos et al. 2003. Making Tissue Engineering Scaffolds Work. Review on the Application of Sold Freeform Fabrication Technology to the Production of Tissue Engineering Scaffolds. European Cells and Materials 5:29-40.
Sakakida et al. 1992. Development of Ferrocene-Mediated Needle-Type Glucose Sensor as a Measure of True Subcutaneous Tissue Glucose Concentrations. Artif. Organs Today 2(2):145-158.
Sakakida et al. 1993. Ferrocene-Mediated Needle Type Glucose Sensor Covered with Newly Designed Biocompatible Membran, Sensors and Actuators B 13-14:319-322.
Salardi et al. 2002. The glucose area under the profiles obtained with continuous glucose monitoring system relationships with HbA1c in pediatric type 1 diabetic patients. Diabetes Care 25(10):1840-1844.
Sanders et al. 2003. Fibrous Encapsulation of Single Polymer Microfibers Depends on their Vertical Dimension in subcutaneous Tissue Polymer Microfibers pp. 1181-1187.
Sansen et al. 1985. "Glucose sensor with telemetry system." In Ko, W. H. (Ed.). Implantable Sensors for Closed Loop Prosthetic Systems. Chap. 12, pp. 167-175, Mount Kisco, NY: Futura Publishing Co.
Sansen et al. 1990. A smart sensor for the voltammetric measurement of oxygen or glucose concentrations. Sensors and Actuators B 1:298-302.
Schmidt et al. 1992. Calibration of a wearable glucose sensor. The International Journal of Artificial Organs 15(1):55-61.
Schmidt et al. 1993. Glucose concentration in subcutaneous extracellular space. Diabetes Care 16(5):695-700.
Schmidtke et al. 1998. Accuracy of the one-point in vivo calibration of "wired" glucose oxidase electrodes implanted in jugular veins of rats in periods of rapid rise and decline of the glucose concentration. Anal Chem 70:2149-2155.
Schmidtke et al., Measurement and modeling of the transient difference between blood and subcutaneous glucose concentrations in the rat after injection of insulin. Proc Natl Acad Sci U S A 1998, 95, 297-299.
Schoemaker et al. 2003. The SCGM1 system: Subcutaneous continuous glucose monitoring based on microdialysis technique. Diabetes Technology & Therapeutics 5(4):599-608.
Schoonen et al. 1990 Development of a potentially wearable glucose sensor for patients with diabetes mellitus: design and in-vitro evaluation. Biosensors & Bioelectronics 5:37-46.
Schuler et al. 1999. Modified gas-permeable silicone rubber membranes for covalent immobilisation of enzymes and their use in biosensor development. Analyst 124:1181-1184.
Selam, J. L. 1997. Management of diabetes with glucose sensors and implantable insulin pumps. From the dream of the 60s to the realities of the 90s. ASAIO J, 43:137-142.
Service et al. 1970. Mean amplitude of glycemic excursions, a measure of diabetic instability. Diabetes, 19: 644-655.
Service et al. 1987. Measurements of glucose control. Diabetes Care, 10: 225-237.
Service, R. F. 2002. Can sensors make a home in the body? Science 297:962-3.
Sharkawy et al. 1996. Engineering the tissue which encapsulates subcutaneous implants. I. Diffusion properties, J Biomed Mater Res, 37:401-412.
Shaw et al. "In vitro testing of a simply constructed, highly stable glucose sensor suitable for implantation in diabetic patients," Biosensors & Bioelectronics, 6:401-406 (1991).
Shichiri et al. 1982. Wearable artificial endocrine pancreas with needle-type glucose sensor. Lancet 2:1129-1131.
Shichiri et al. 1986. Telemetry Glucose Monitoring Device with Needle-Type Glucose Sensor: A Useful Tool for Blood Glucose Monitoring in Diabetic Individuals. Diabetes Care, Inc. 9(3):298-301.
Shichiri et al. 1983. Glycaemic Control in Pancreatectomized Dogs with a Wearable Artificial Endocrine Pancreas. Diabetologia 24:179-184.
Shichiri et al. 1985. Needle-type Glucose Sensor for Wearable Artificial Endocrine Pancreas in Implantable Sensors 197-210.
Shichiri et al., 1989. Membrane Design for Extending the Long-Life of an Implantable Glucose Sensor. Diab. Nutr. Metab. 2:309-313.
Shults et al. 1994. A telemetry-instrumentation system for monitoring multiple subcutaneously implanted glucose sensors. IEEE Transactions on Biomedical Engineering 41(10):937-942.
Sieminski et al. 2000. Biomaterial-microvasculature interactions. Biomaterials 21:2233-2241.
Skyler, J. S. 2000. The economic burden of diabetes and the benefits of improved glycemic control: The potential role of a continuous glucose monitoring system. Diabetes Technology & Therapeutics 2 Suppl 1:S7-12.
Slater-Maclean et al. 2008. Accuracy of glycemic measurements in the critically ill. Diab. Thechnol. & Therapeut., 10:169-177.
Smith et al. 1998. An externally powered, multichannel, implantable stimulator-telemeter for control of paralyzed muscle. IEEE Transactions on Biomedical Engineering 45(4):463-475.
Sokol et al. 1980, Immobilized-enzyme rate-determination method for glucose analysis, Clin. Chem. 26(1):89-92.
Sokolov et al. 1995. Metrological opportunities of the dynamic mode of operating an enzyme amperometric biosensor. Med. Eng. Phys. 17(6):471-476.

(56) **References Cited**

OTHER PUBLICATIONS

Sparacino et al., 2008. Continuous glucose monitoring time series and hypo/hyperglycemia prevention: requirements, methods, open problems, Current Diabetes Reviews, 4:181-192.
Sproule et al. 2002. Fuzzy pharmacology: Theory and applications. Trends in Pharmacological Sciences, 23(9):412-417.
Sriyudthsak et al. 1996. Enzyme-epoxy membrane based glucose analyzing system and medical applications. Biosens Bioelectron 11:735-742.
Steil et al. 2003. Determination of plasma glucose during rapid glucose excursions with a subcutaneous glucose sensor. Diabetes Technology & Therapeutics 5(1):27-31.
Stern et al., 1957. Electrochemical polarization: 1. A theoretical analysis of the shape of polarization curves, Journal of the Electrochemical Society, 104(1):56-63.
Sternberg et al. 1988. Study and Development of Multilayer Needle-type Enzyme-based Glucose Microsensors. Biosensors 4:27-40.
Sternberg et al. 1988. Covalent enzyme coupling on cellulose acetate membranes for glucose sensor development. Anal. Chem. 69:2781-2786.
Sternberg et al. 1996. Does fall in tissue glucose precede fall in blood glucose? Diabetologia 39:609-612.
Stokes. 1988. Polyether Polyurethanes: Biostable or Not? J. Biomat. Appl. 3:228-259.
Street et al. 1988. A note on computing robust regression estimates via iteratively reweighted least squares. The American Statistician 42(2):152-154.
Suh et al. 2002. Behavior of fibroblasts on a porous hyaluronic acid incorporated collagen matrix. Yonsei Medical Journal 43(2):193-202.
Sumino T. et al. 1998. Preliminary study of continuous glucose monitoring with a microdialysis technique. Proceedings of the IEEE, 20(4):1775-1778.
Takegami et al. 1992. Pervaporation of ethanol/water mixtures using novel hydrophobic membranes containing polydimethylsiloxane, Journal of Membrance Science, 75(93-105).
Tamura, T. et al. 2000. Preliminary study of continuous glucose monitoring with a microdialysis technique and a null method—a numerical analysis. Frontiers Med. Biol. Engng. 10(2):147-156.
Tanenberg et al. 2000. Continuous glucose monitoring system: A new approach to the diagnosis of diabetic gastroparesis. Diabetes Technology & Therapeutics, 2 Suppl 1:S73-80.
Tang et al. 1993. Fibrin(ogen) mediates acute inflammatory responses to biomaterials. J Exp Med 178:2147-2156.
Tang et al. 1995. Inflammatory responses to biomaterials. Am J Clin Pathol 103:466-471.
Tang et al. 1996. Molecular determinants of acute inflammatory responses to biomaterials. J Clin Invest 97:1329-1334.
Tang et al. 1998. Mast cells mediate acute inflammatory responses to implanted biomaterials. Proc Natl Acad Sci U S A 95:8841-8846.
Tatsuma et al. 1991. Oxidase/peroxidase bilayer-modified electrodes as sensors for lactate, pyruvate, cholesteral and uric acid, Analytica Chimica Acta, 242:85-89.
Thome et al. 1995.—Abstract—Can the decrease in subcutaneous glucose concentration precede the decrease in blood glucose level? Proposition for a push-pull kinetics hypothesis, Horm. Metab. Res. 27:53.
Thomé-Duret et al. 1996. Modification of the sensitivity of glucose sensor implanted into subcutaneous tissue. Diabetes Metabolism, 22:174-178.
Thome-Duret et al. 1996. Use of a subcutaneous glucose sensor to detect decreases in glucose concentration prior to observation in blood, Anal. Chem. 68:3822-3826.
Thomé-Duret et al. 1998. Continuous glucose monitoring in the free-moving rat. Metabolism, 47:799-803.
Thompson et al., In Vivo Probes: Problems and Perspectives, Department of Chemistry, University of Toronto, Canada, pp. 255-261, 1986.
Tibell et al. 2001. Survival of macroencapsulated allogeneic parathyroid tissue one year after transplantation in nonimmuno-suppressed humans. Cell Transplant 10:591-9.
Tierney et al. 2000. Effect of acetaminophen on the accuracy of glucose measurements obtained with the GlucoWatch biographer. Diabetes Technol Ther 2:199-207.
Tierney et al. 2000. The GlucoWatch® biographer: A frequent, automatic and noninvasive glucose monitor. Ann. Med. 32:632-641.
Tilbury et al. 2000. Receiver operating characteristic analysis for intelligent medical systems—A new approach for finding confidence intervals. IEEE Transactions on Biomedical Engineering 47(7):952-963.
Torjman et al., Glucose monitoring in acute care: technologies on the horizon, Journal of Deabetes Science and Technology, 2(2):178-181, Mar. 2008.
Trajanoski et al. 1998. Neural predictive controller for insulin delivery using the subcutaneous route. IEEE Transactions on Biomedical Engineering 45(9):1122-1134.
Trecroci, D. 2002. A Glimpse into the Future—Continuous Monitoring of Glucose with a Microfiber. Diabetes Interview 42-43.
Tse and Gough. 1987. Time-Dependent Inactivation of Immobilized Glucose Oxidase and Catalase. Biotechnol. Bioeng. 29:705-713.
Turner and Pickup, "Diabetes mellitus: biosensors for research and management," Biosensors, 1:85-115 (1985).
Turner et al. 1984. Carbon Monoxide: Acceptor Oxidoreductase from Pseudomonas Thermocarboxydovorans Strain C2 and its use in a Carbon Monoxide Sensor. Analytica Chimica Acta, 163: 161-174.
Turner, A.P.F. 1988. Amperometric biosensor based on mediator-modified electrodes. Methods in Enzymology 137:90-103.
Unger et al. 2004. Glucose control in the hospitalized patient. Emerg Med 36(9):12-18.
Updike et al. 1967. The enzyme electrode. Nature, 214:986-988.
Updike et al. 1979. Continuous glucose monitor based on an immobilized enzyme electrode detector. J Lab Clin Med, 93(4):518-527.
Updike et al. 1982. Implanting the glucose enzyme electrode: Problems, progress, and alternative solutions. Diabetes Care, 5(3):207-212.
Updike et al. 1988. Laboratory Evaluation of New Reusable Blood Glucose Sensor. Diabetes Care, 11:801-807.
Updike et al. 1994. Enzymatic glucose sensor: Improved long-term performance in vitro and in vivo. ASAIO Journal, 40(2):157-163.
Updike et al. 1997. Principles of long-term fully impleated sensors with emphasis on radiotelemetric monitoring of blood glucose form inside a subcutaneous foreign body capsule (FBC). In Fraser, ed., Biosensors in the Body. New York. John Wiley & Sons, pp. 117-137.
Updike et al. 2000. A subcutaneous glucose sensor with improved longevity, dynamic range, and stability of calibration. Diabetes Care 23(2):208-214.
Utah Medical Products Inc., Blood Pressure Tranducers product specifications. 6 pp. 2003-2006, 2003.
Vadgama, P. Nov. 1981. Enzyme electrodes as practical biosensors. Journal of Medical Engineering & Technology 5(6):293-298.
Vadgama. 1988. Diffusion limited enzyme electrodes. NATO ASI Series: Series C, Math and Phys. Sci. 226:359-377.
Valdes et al. 2000. In vitro and in vivo degradation of glucose oxidase enzyme used for an implantable glucose biosensor. Diabetes Technol. Ther. 2:367-376.
Van den Berghe 2004. Tight blood glucose control with insulin in "real-life" intensive care. Mayo Clin Proc 79(8):977-978.
Velho et al. 1989. In vitro and in vivo stability of electrode potentials in needle-type glucose sensors. Influence of needle material. Diabetes 38:164-171.
Velho et al. 1989. Strategies for calibrating a subcutaneous glucose sensor. Biomed Biochim Acta 48(11/12):957-964.
von Woedtke et al. 1989. In situ calibration of implanted electrochemical glucose sensors. Biomed Biochim. Acta 48(11/12):943-952.
Wade Jr., L.G. Organic Chemistry, Chapter 17, Reactions of Aromatic Compounds pp. 762-763, 2003.

(56) **References Cited**

OTHER PUBLICATIONS

Wagner et al. 1998. Continuous amperometric monitoring of glucose in a brittle diabetic chimpanzee with a miniature subcutaneous electrode. Proc. Natl. Acad. Sci. A, 95:6379-6382.
Wang et al. 1994. Highly Selective Membrane-Free, Mediator-Free Glucose Biosensor. Anal. Chem. 66:3600-3603.
Wang et al. 1997. Improved ruggedness for membrane-based amperometric sensors using a pulsed amperometric method. Anal Chem 69:4482-4489.
Ward et al. 1999. Assessment of chronically implanted subcutaneous glucose sensors in dogs: The effect of surrounding fluid masses. ASAIO Journal, 45:555-561.
Ward et al. 2000. Understanding Spontaneous Output Fluctuations of an Amperometric Glucose Sensor: Effect of Inhalation Anesthesia and e of a Nonenzyme Containing Electrode. ASAIO Journal 540-546.
Ward et al. 2000. Rise in background current over time in a subcutaneous glucose sensor in the rabbit: Relevance to calibration and accuracy. Biosensors & Bioelectronics, 15:53-61.
Ward et al. 2002. A new amperometric glucose microsensor: In vitro and short-term in vivo evaluation. Biosensors & Bioelectronics, 17:181-189.
Wientjes, K. J. C. 2000. Development of a glucose sensor for diabetic patients (Ph.D. Thesis).
Wikipedia 2006. "Intravenous therapy," http://en.wikipedia.org/wiki/Intravenous_therapy, Aug. 15, 2006, 6 pp.
Wiley Electrical and Electronics Engineering Dictionary. 2004. John Wiley & Sons, Inc. pp. 141, 142, 548, 549.
Wilkins et al. 1988. The coated wire electrode glucose sensor, Horm Metab Res Suppl., 20:50-55.
Wilkins et al. 1995. Glucose monitoring: state of the art and future possibilities. Med Eng Phys 18:273-288.
Wilkins et al. 1995. Integrated implantable device for long-term glucose monitoring. Biosens. Bioelectron 10:485-494.
Wilson et al. 1992. Progress toward the development of an implantable sensor for glucose. Clin. Chem. 38(9):1613-1617.
Wilson et al. 2000. Enzyme-based biosensors for in vivo measurements. Chem. Rev., 100:2693-2704.
Wood, W. et al. Mar. 1990. Hermetic Sealing with Epoxy. Mechanical Engineering 1-3.
Woodward. 1982. How Fibroblasts and Giant Cells Encapsulate Implants: Considerations in Design of Glucose Sensor. Diabetes Care 5:278-281.
Worsley et al., Measurement of glucose in blood with a phenylboronic acid optical sensor, Journal of Diabetes Science and Technology, 2(2):213-220, Mar. 2008.
Wright et al., Bioelectrochemical dehalogenations via direct electrochemistry of poly(ethylene oxide)-modified myoglobin, Electrochemistry Communications 1 (1999) 603-611.
Wu et al. 1999. In situ electrochemical oxygen generation with an immunoisolation device. Annals New York Academy of Sciences, pp. 105-125.
Yamasaki et al. 1989. Direct measurement of whole blood glucose by a needle-type sensor. Clinica Chimica Acta. 93:93-98.
Yamasaki, Yoshimitsu. Sep. 1984. The development of a needle-type glucose sensor for wearable artificial endocrine pancreas. Medical Journal of Osaka University 35(1-2):25-34.
Yang et al (1996). "A glucose biosensor based on an oxygen electrode: In-vitro performances in a model buffer solution and in blood plasma," Biomedical Instrumentation & Technology, 30:55-61.
Yang et al. 1998. Development of needle-type glucose sensor with high selectivity. Science and Actuators B 46:249-256.
Yang et al. 2004. A Comparison of Physical Properties and Fuel Cell Performance of Nafion and Zirconium Phosphate/Nafion Composite Membranes. Journal of Membrane Science 237:145-161.
Ye et al. 1993. High Current Density 'Wired' Quinoprotein Glucose Dehydrogenase Electrode. Anal. Chem. 65:238-241.
Zamzow et al. Development and evaluation of a wearable blood glucose monitor. pp. M588-M591, 1990.
Zavalkoff et al. 2002. Evaluation of conventional blood glucose monitoring as an indicator of integrated glucose values using a continuous subcutaneous sensor. Diabetes Care 25(9):1603-1606.
Zethelius et al. 2008. Use of multiple biomarkers to improve the prediction of death from cardiovascular causes. N. Engl. J. Med., 358: 2107-2116.
Zhang et al (1993). Electrochemical oxidation of H2O2 on Pt and Pt + Ir electrodes in physiological buffer and its applicability to H2O2-based biosensors. J. Electroanal. Chem., 345:253-271.
Zhang et al. 1993. In vitro and in vivo evaluation of oxygen effects on a glucose oxidase based implantable glucose sensor. Analytica Chimica Acta, 281:513-520.
Zhang et al. 1994. Elimination of the acetaminophen interference in an implantable glucose sensor. Analytical Chemistry 66(7):1183-1188.
Zhu et al. (1994). "Fabrication and characterization of glucose sensors based on a microarray H2O2 electrode." Biosensors & Bioelectronics, 9: 295-300.
Zhu et al. 2002. Planar amperometric glucose sensor based on glucose oxidase immobilized by chitosan film on prussian blue layer. Sensors, 2:127-136.
Ziaie et al. 1997. A single-channel implantable microstimulator for functional neuromuscular stimulation. IEEE Transactions on Biomedical Engineering 44(10):909-920.
ISR and WO dated Oct. 2, 2008 for PCT/US2008/065978, filed Jun. 5, 2008.
IPRP dated Dec. 11, 2009 for PCT/US2008/065978, filed Jun. 5, 2008.

* cited by examiner

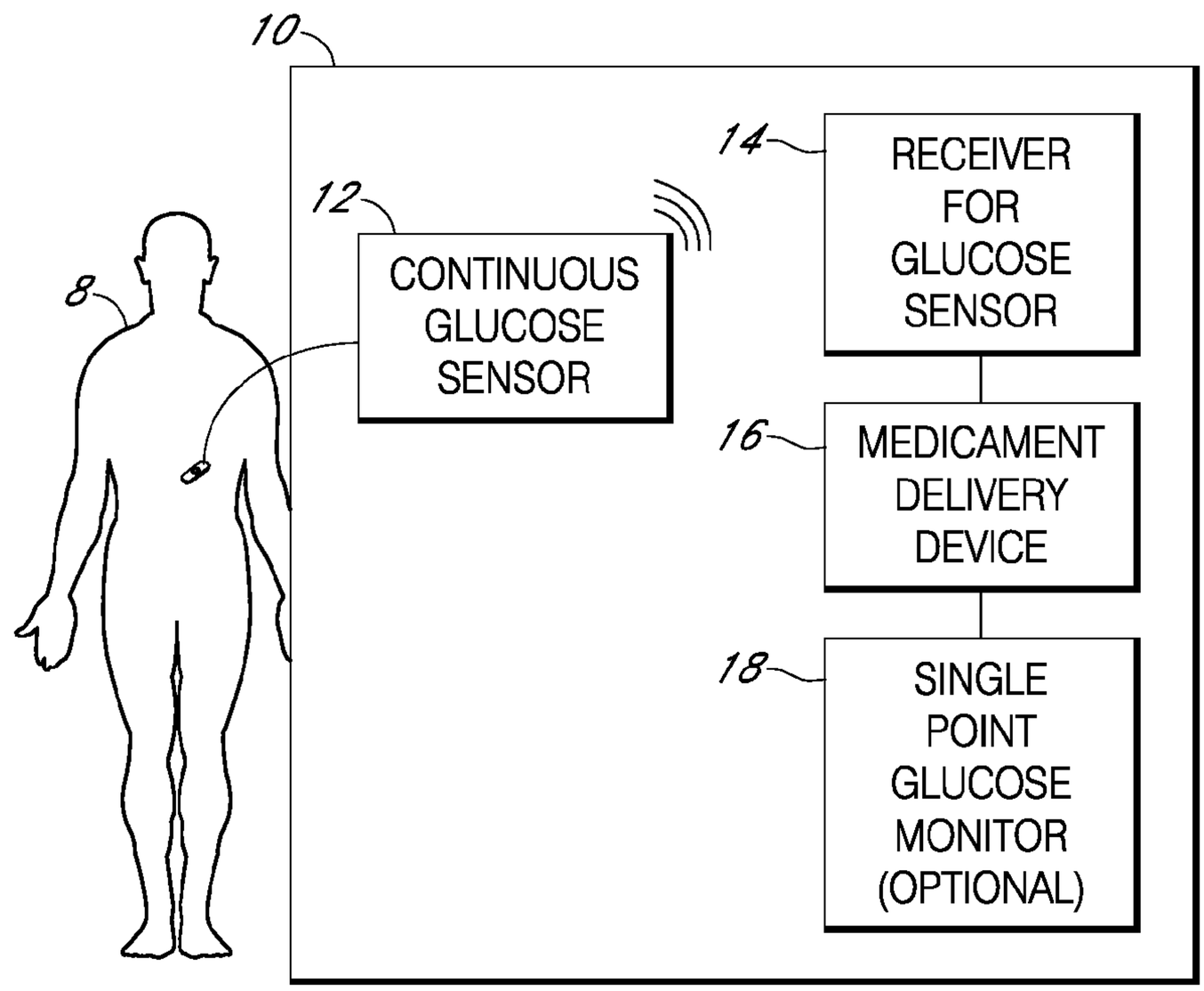
10
12
CONTINUOUS GLUCOSE SENSOR
14
RECEIVER FOR GLUCOSE SENSOR
8
16
MEDICAMENT DELIVERY DEVICE
18
SINGLE POINT GLUCOSE MONITOR (OPTIONAL)

FIG. 1

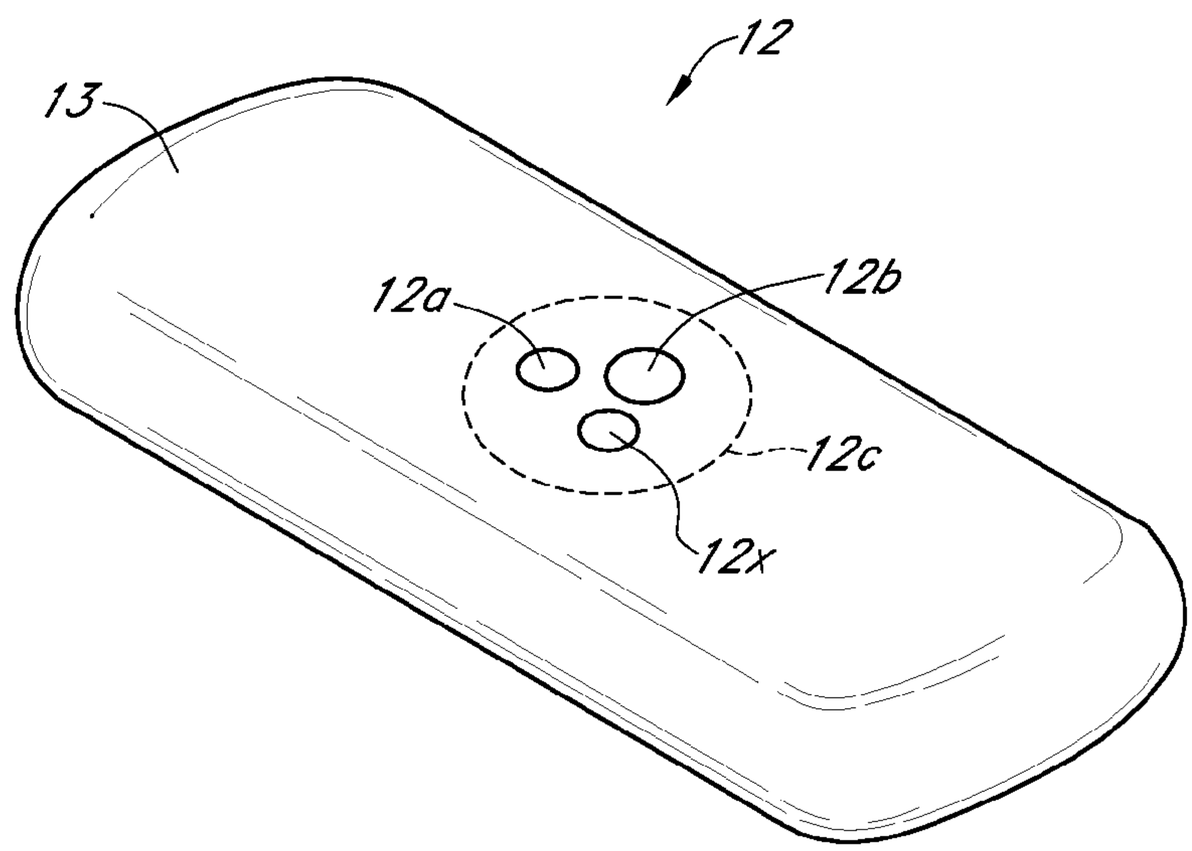
12
13
12a
12b
12c
12x

FIG. 2A

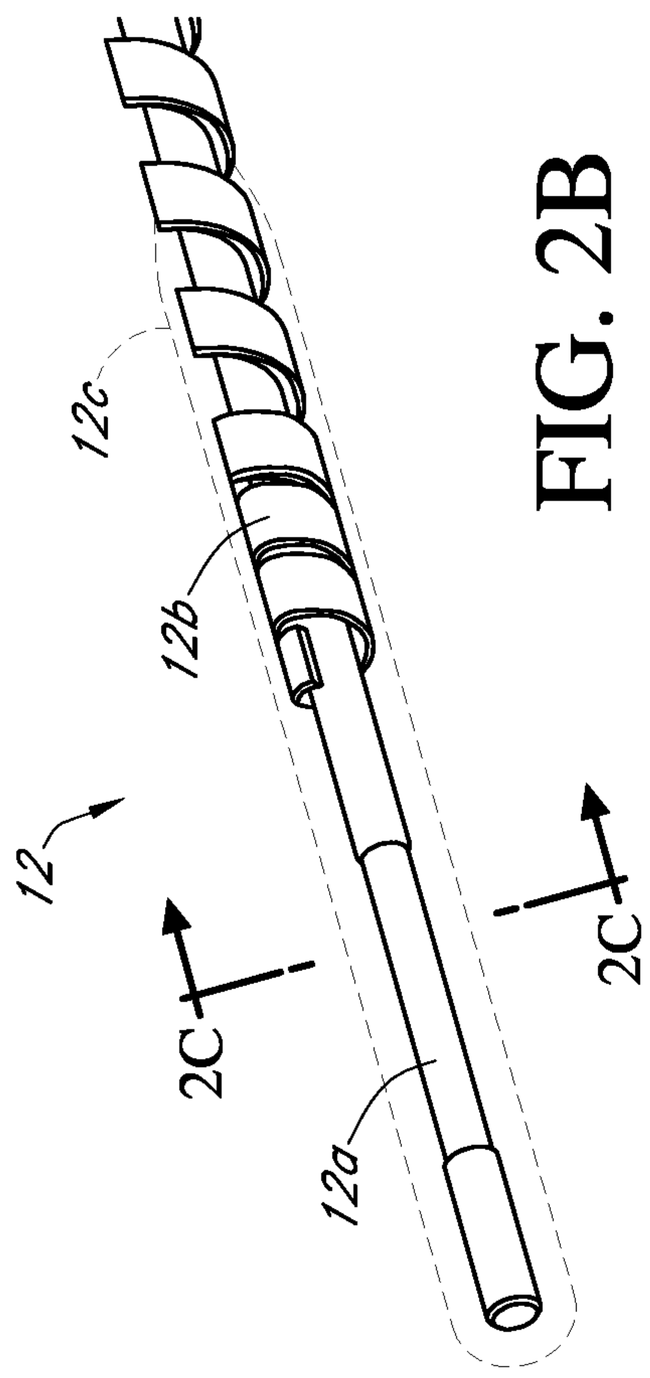

FIG. 2B

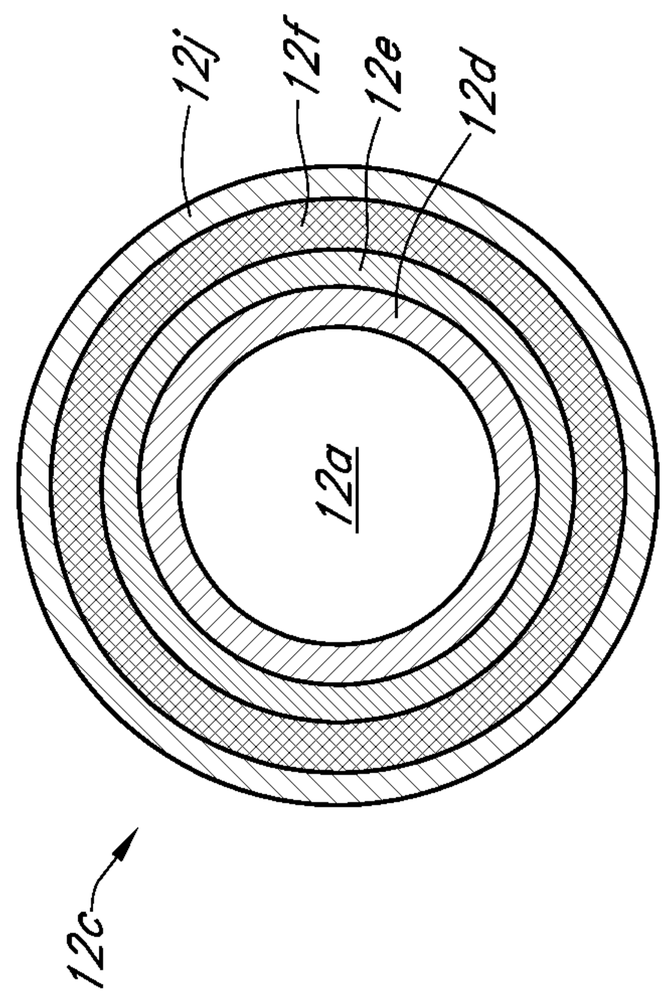

FIG. 2C

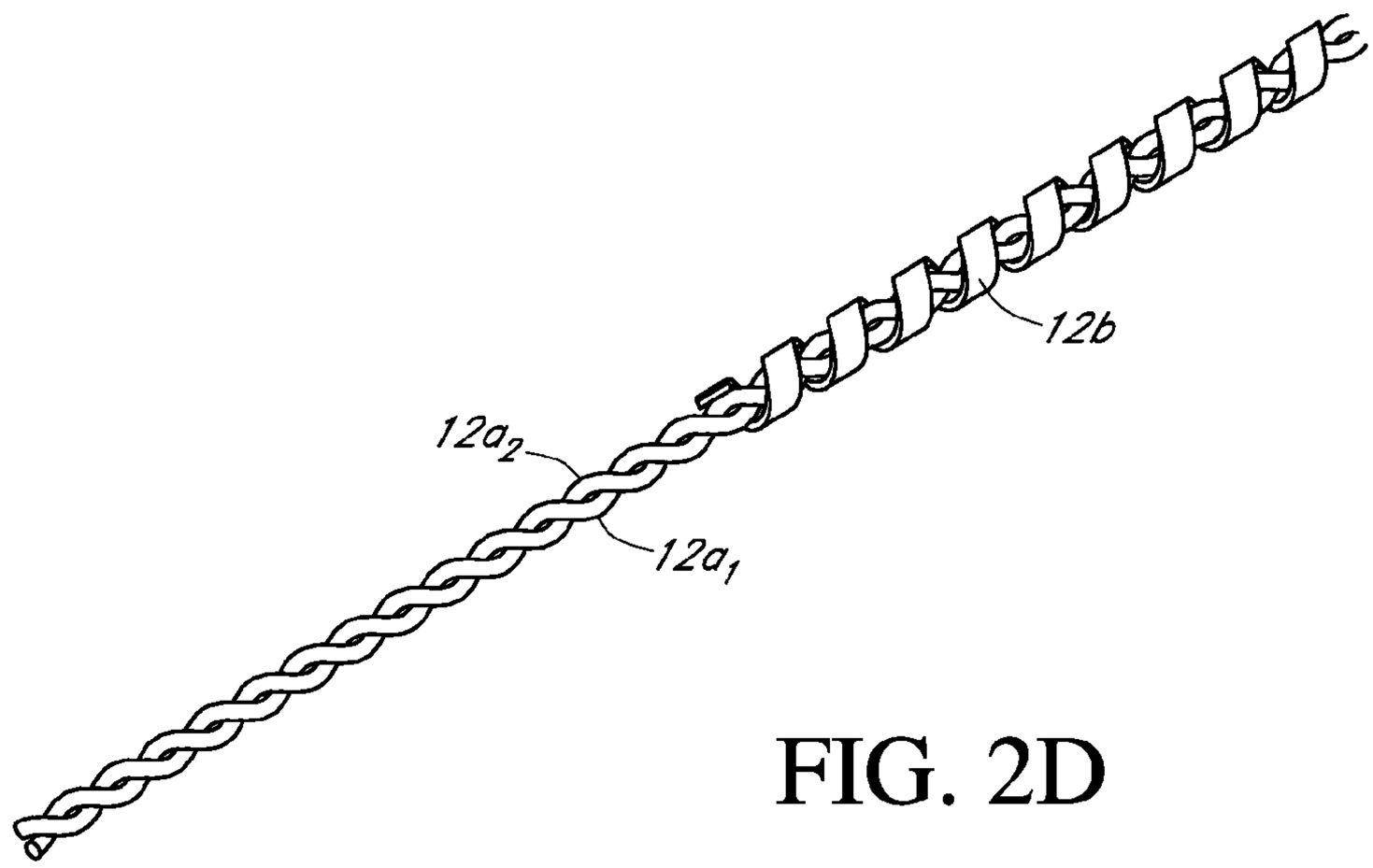

FIG. 2D

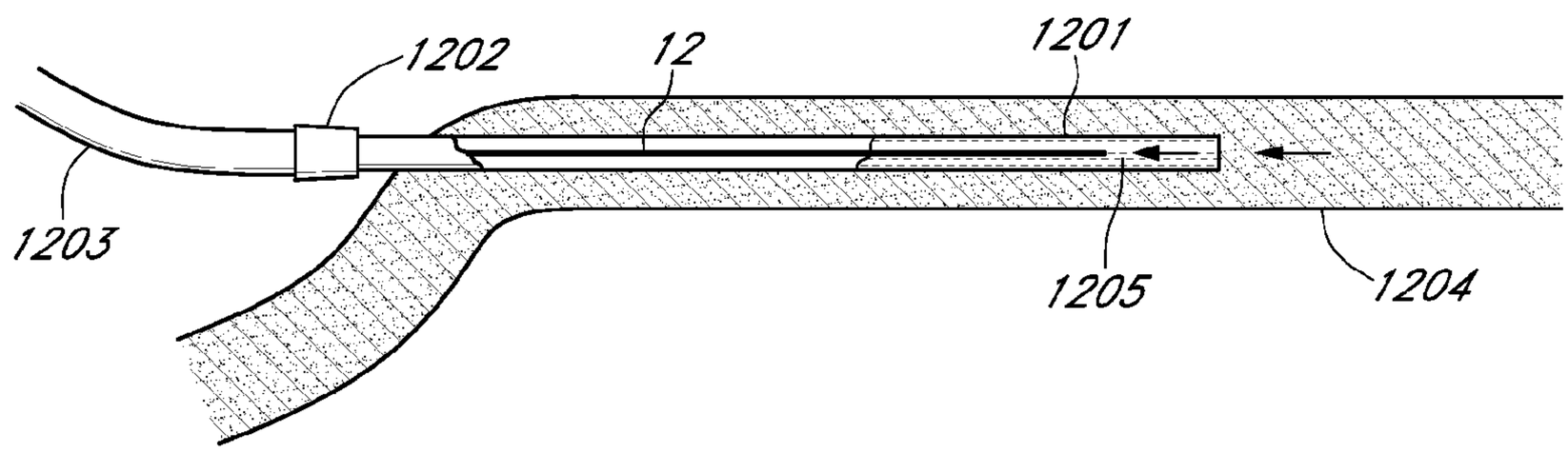

FIG. 2E

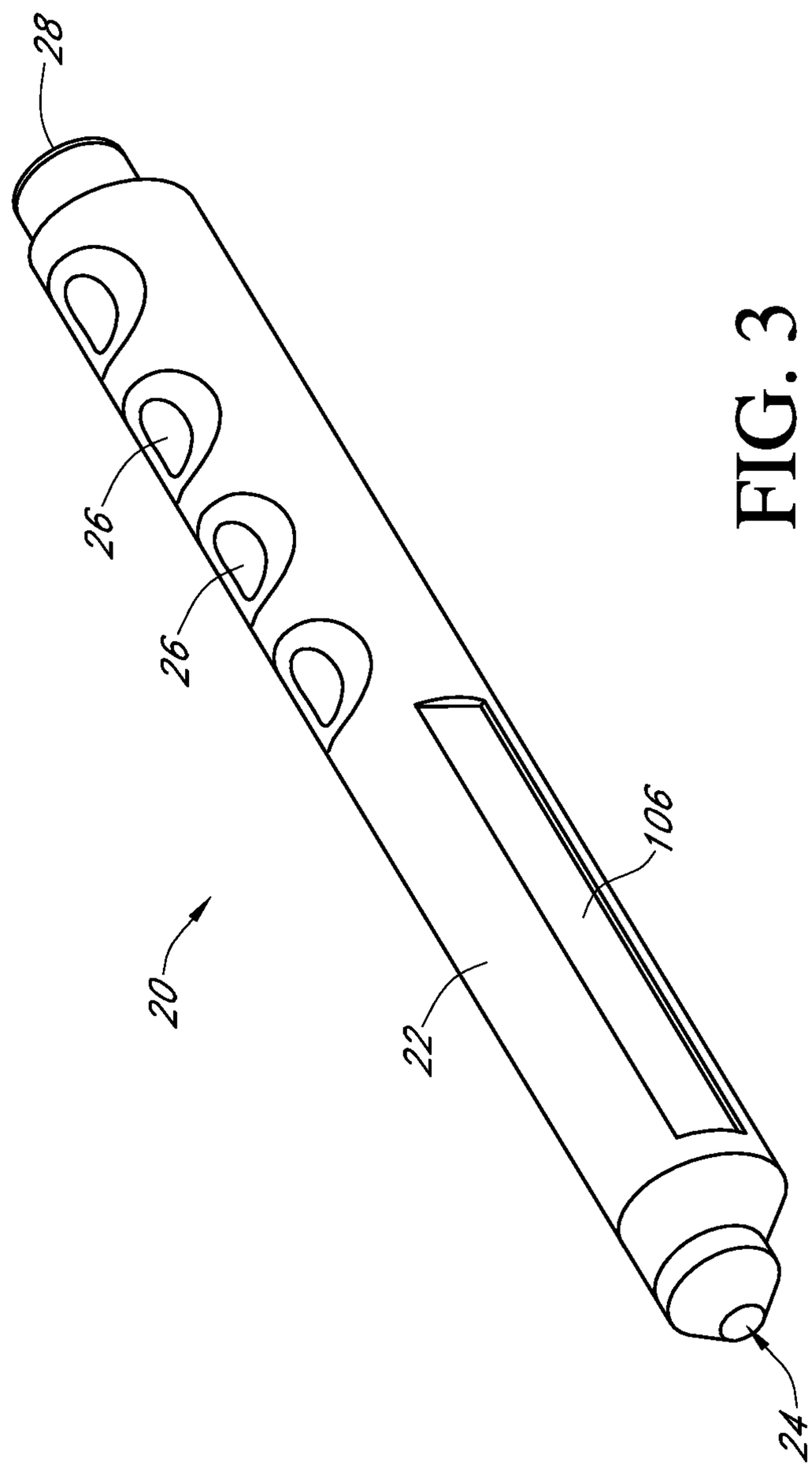

FIG. 3

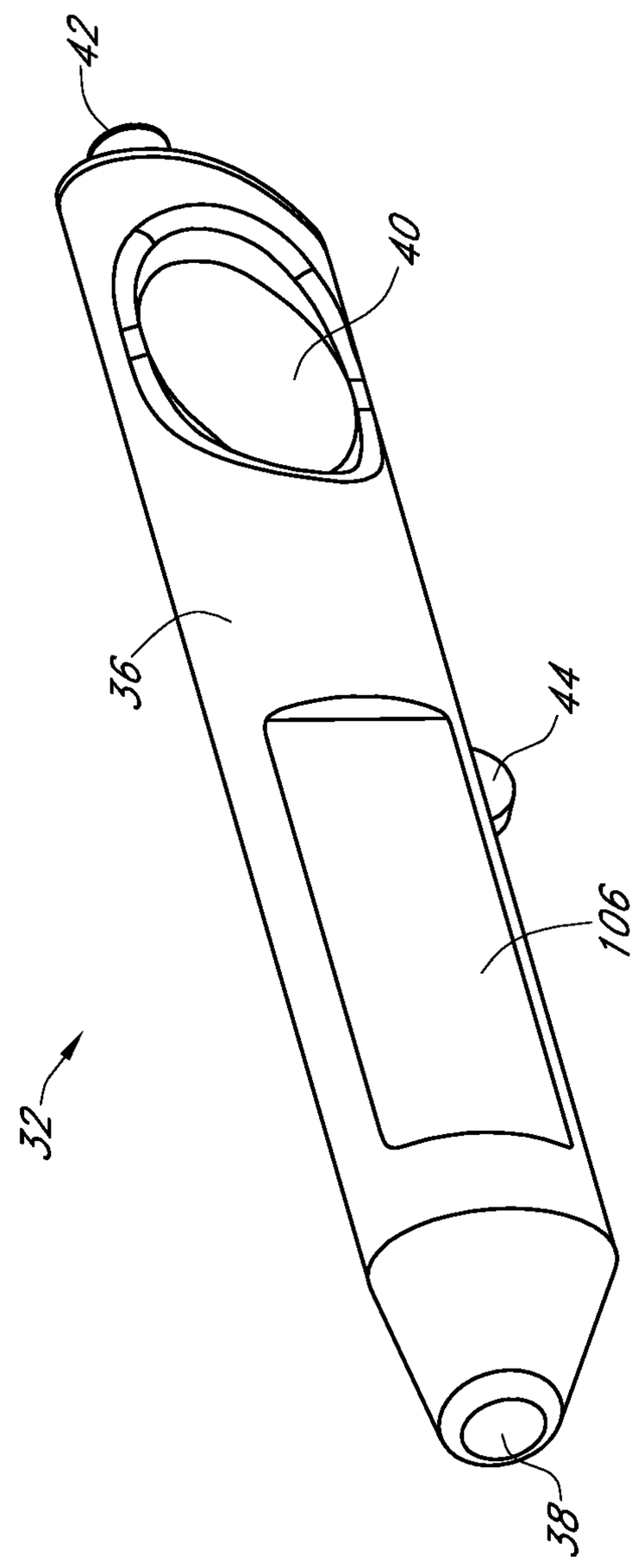

FIG. 4

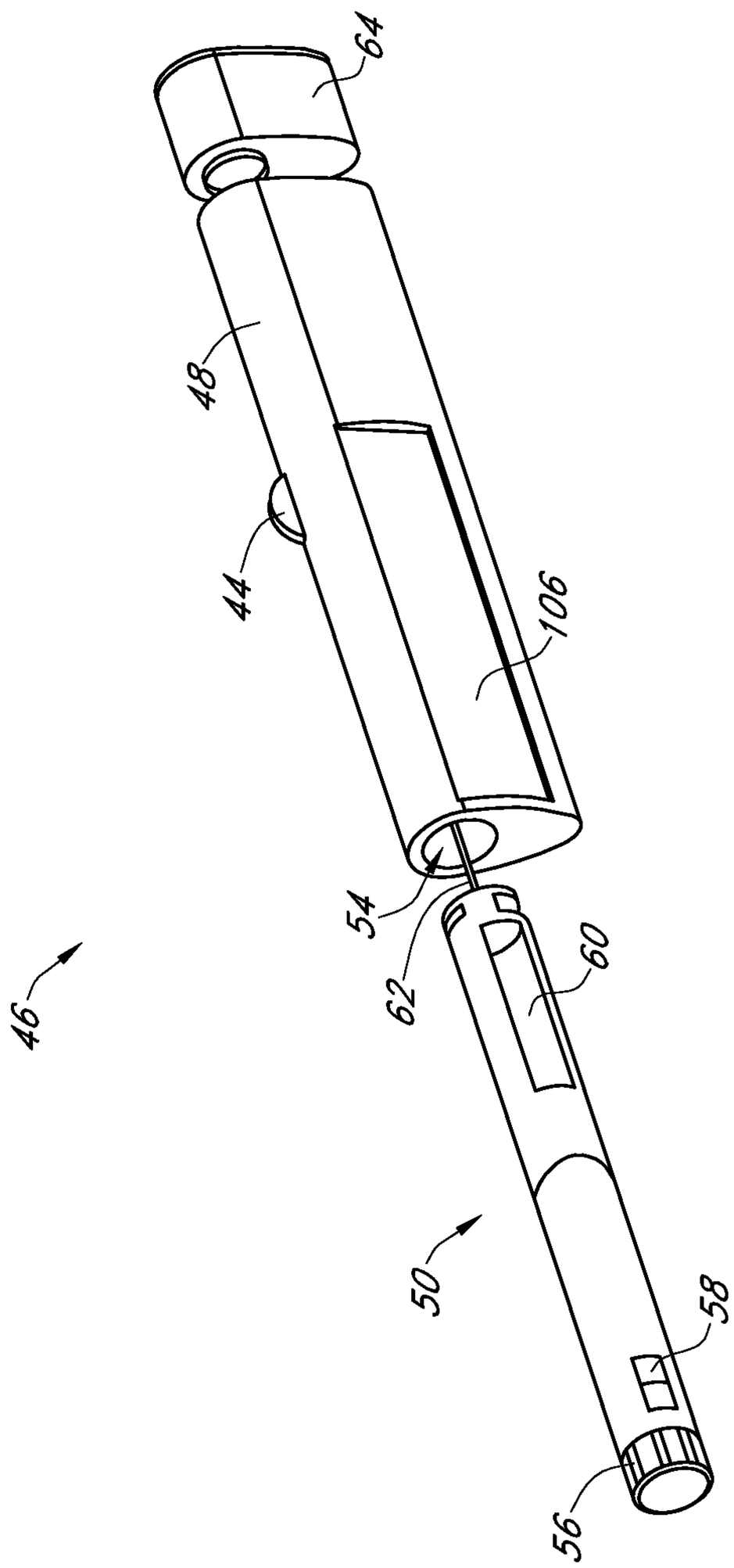

FIG. 5

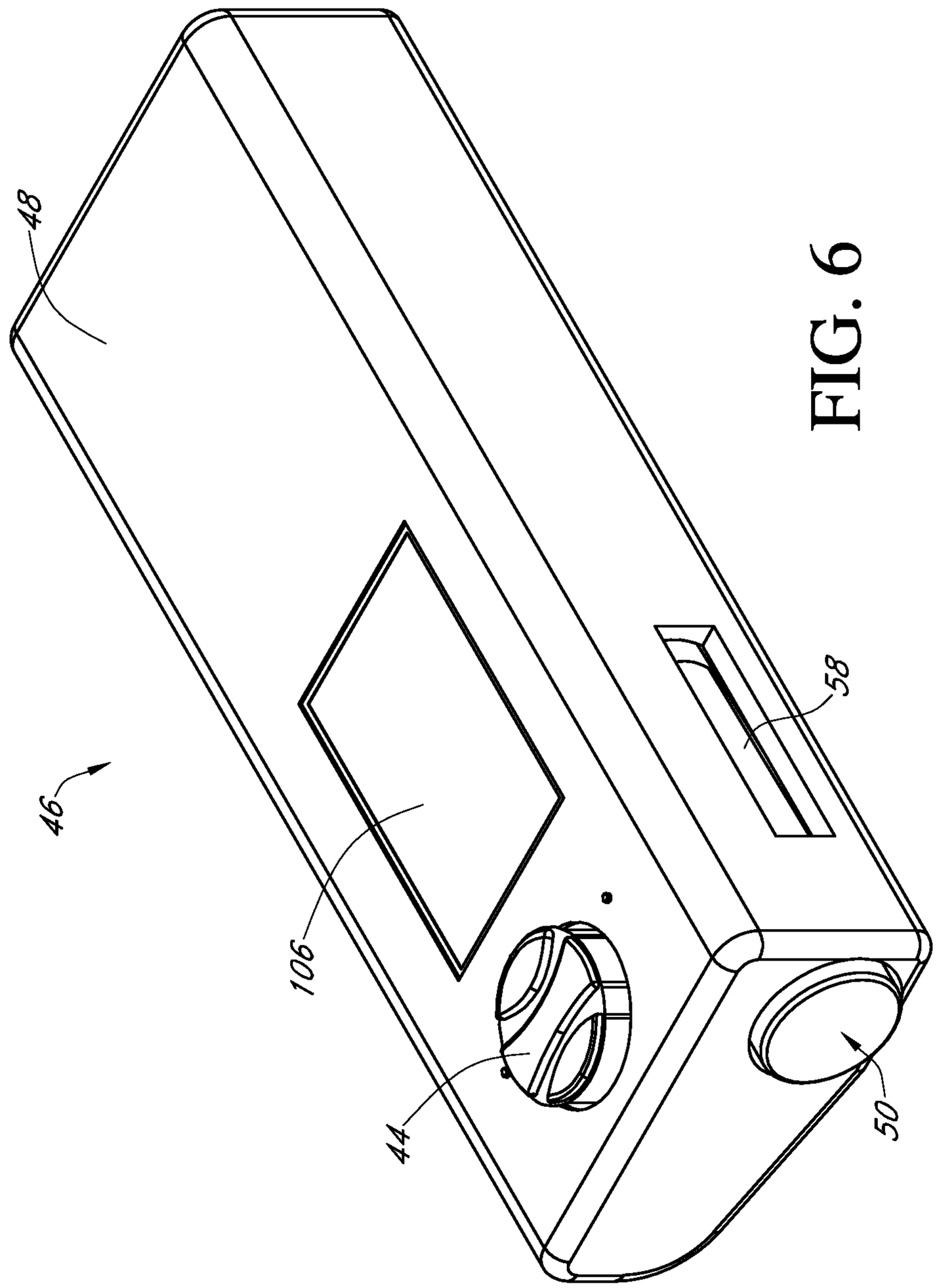

FIG. 6

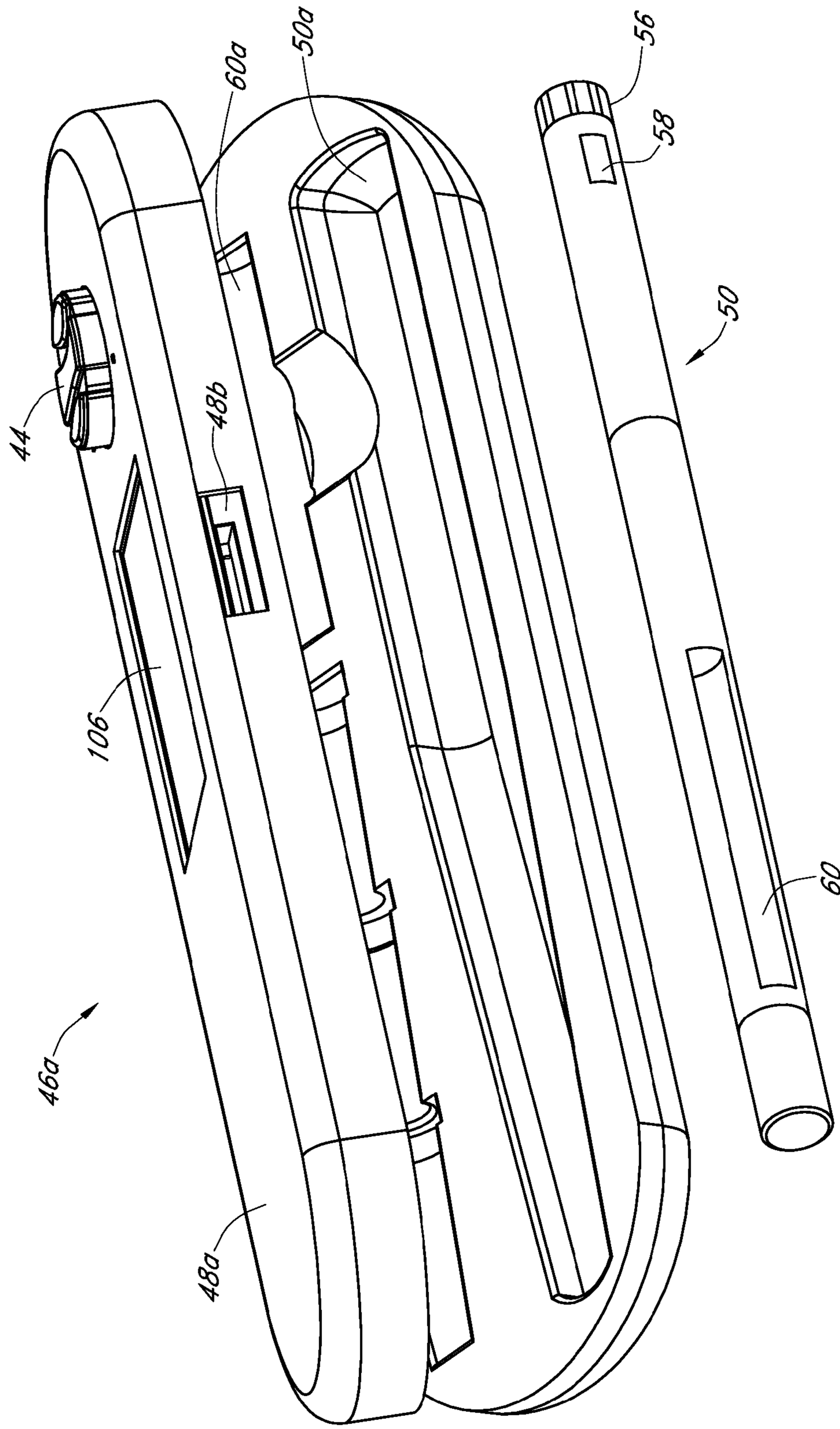

FIG. 7

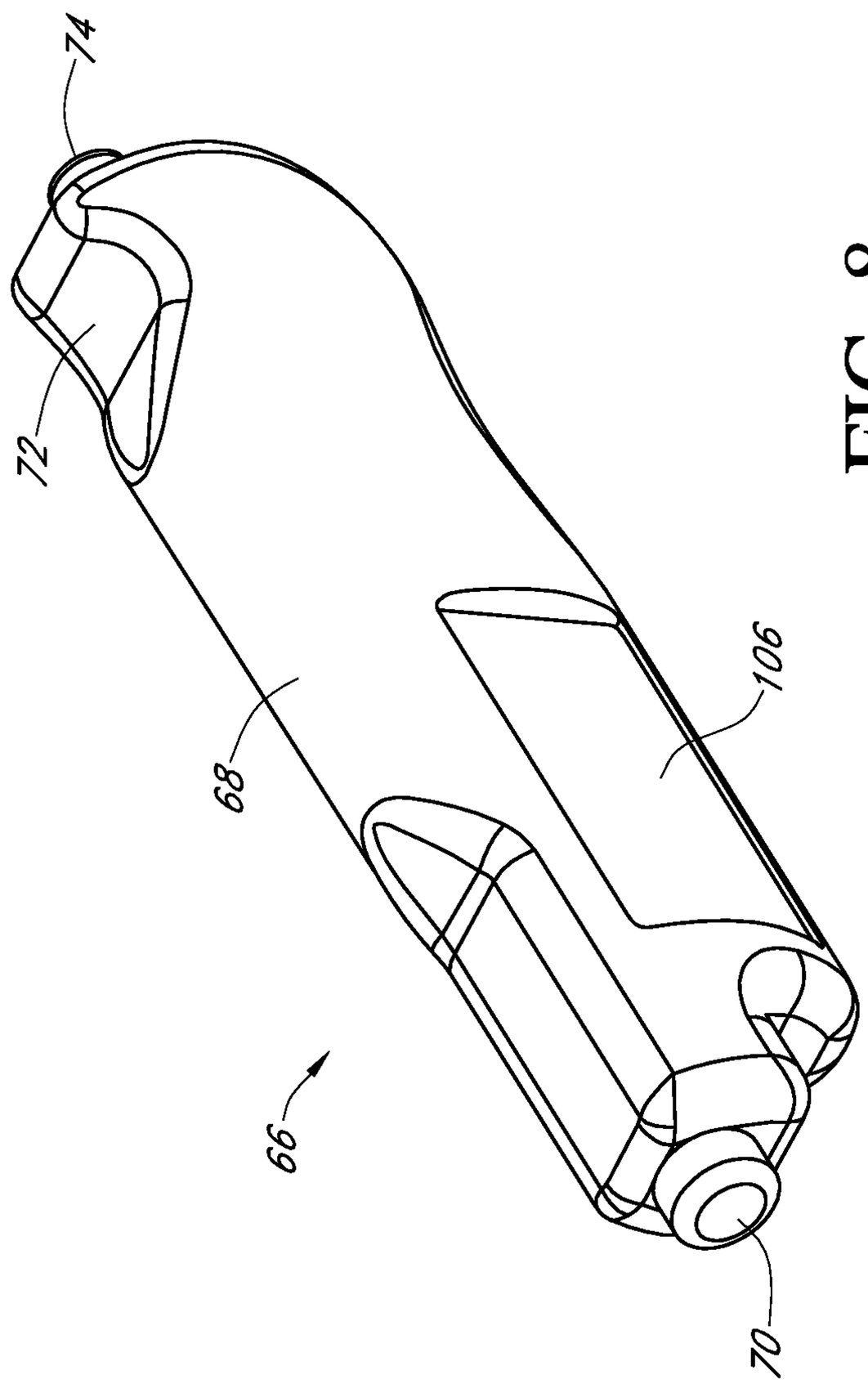

FIG. 8

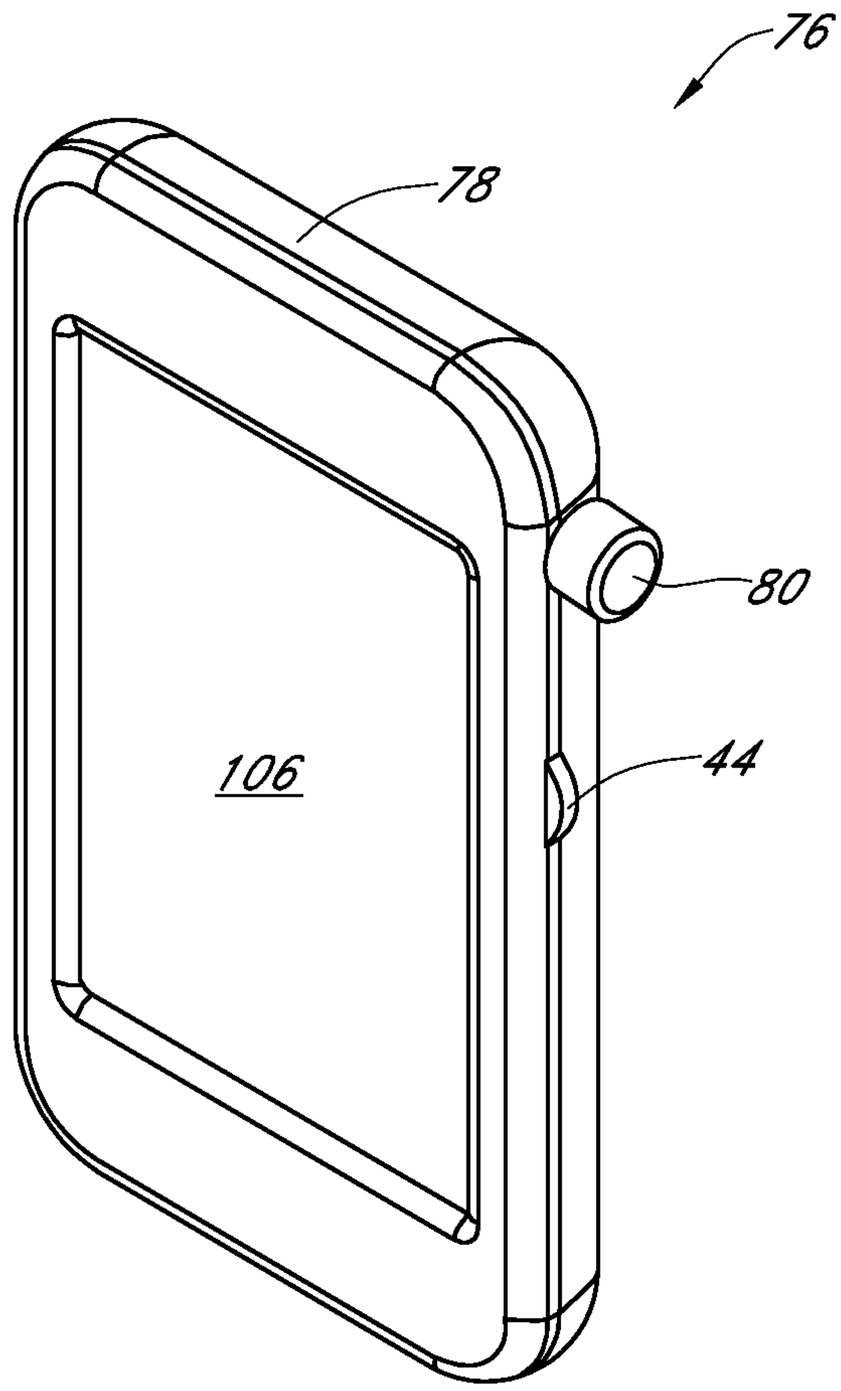

FIG. 9

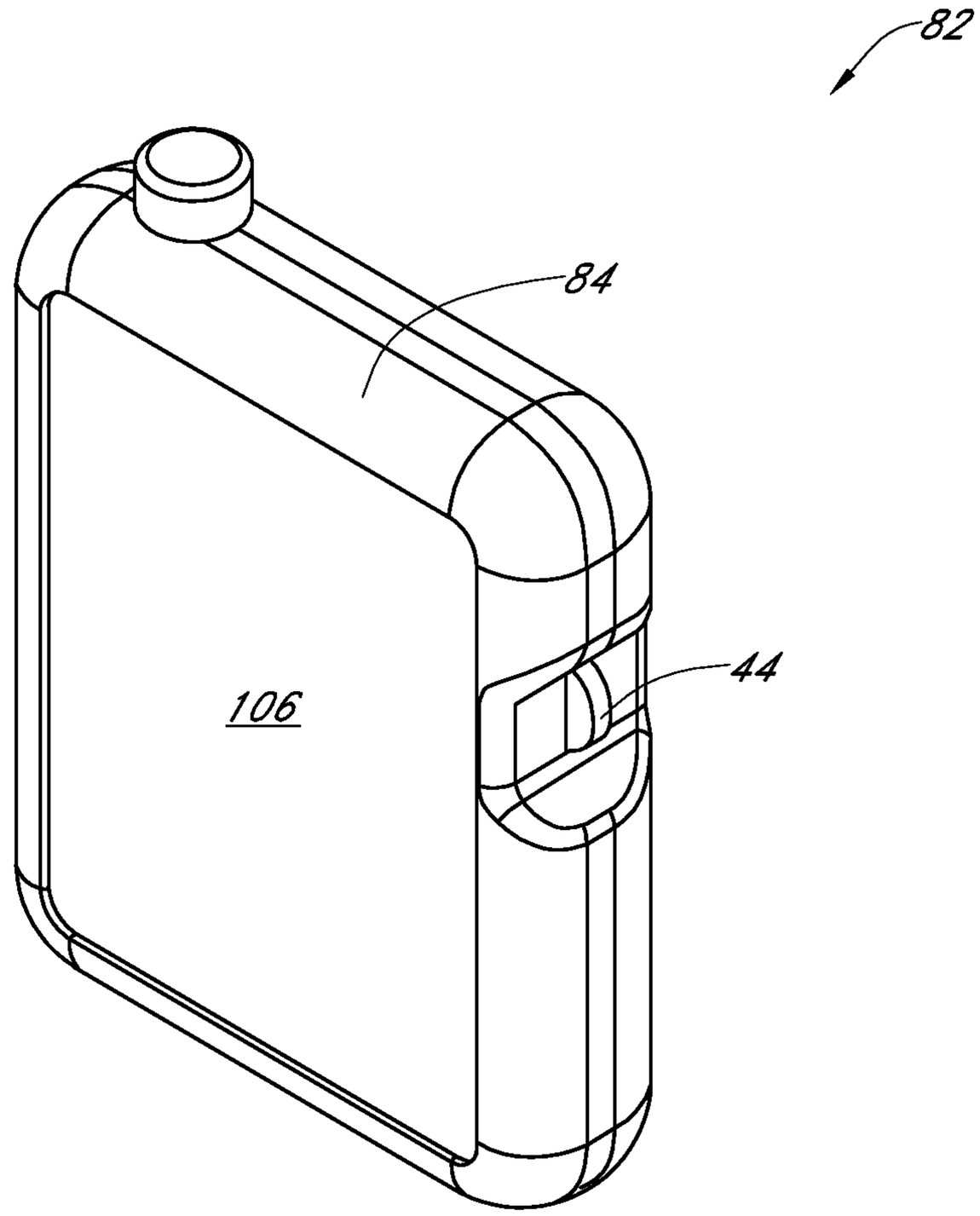

FIG. 10

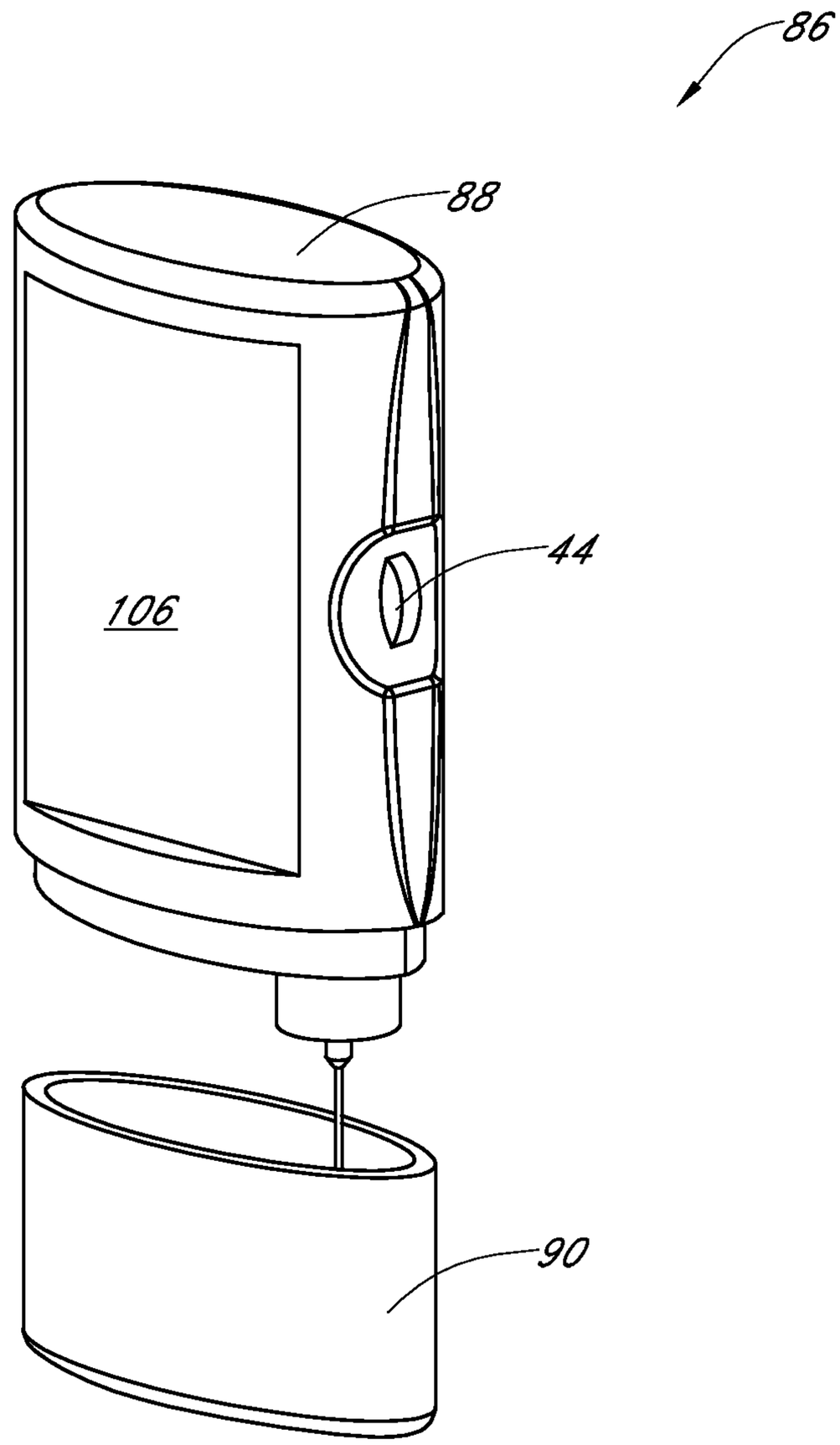

FIG. 11

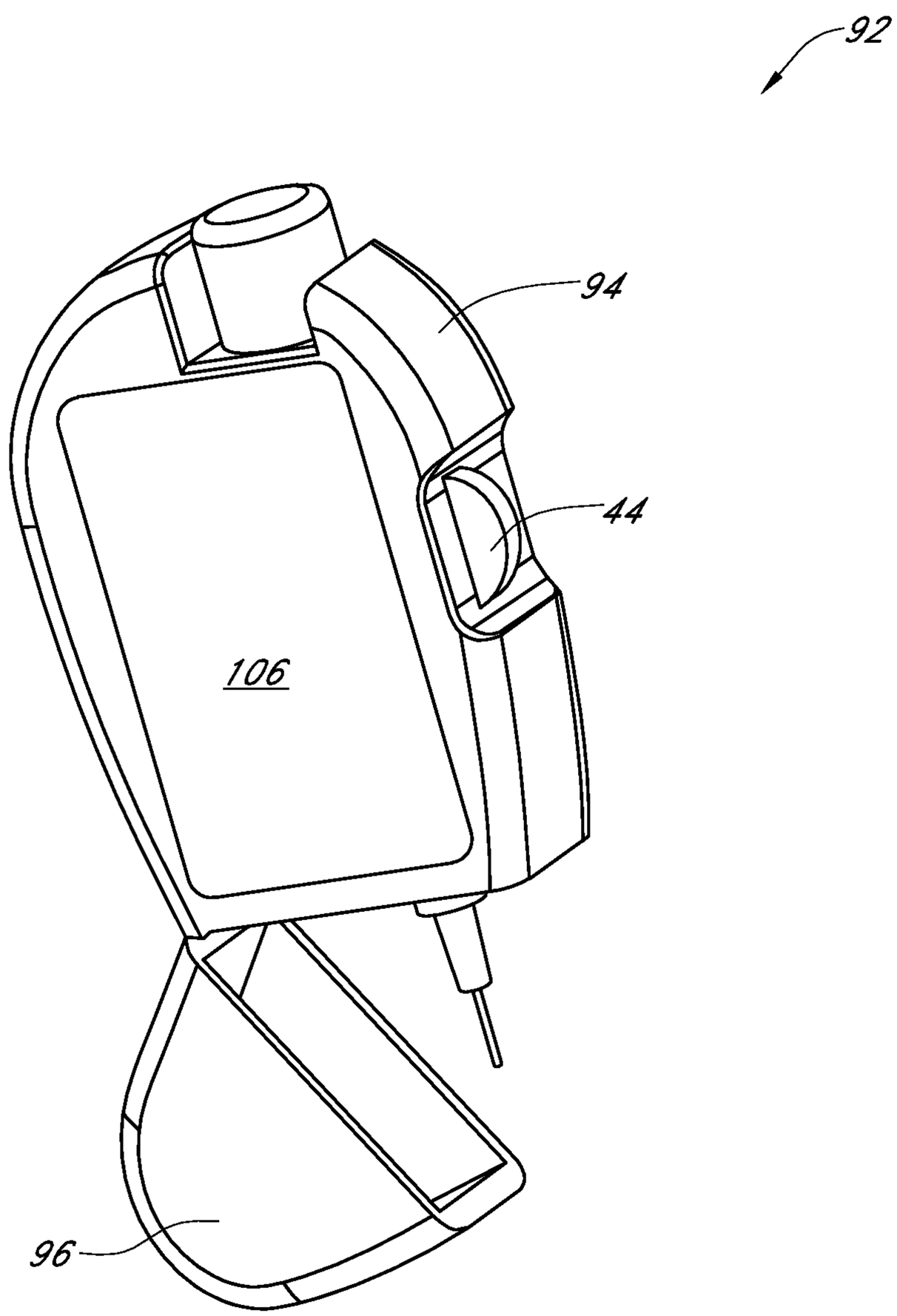

FIG. 12

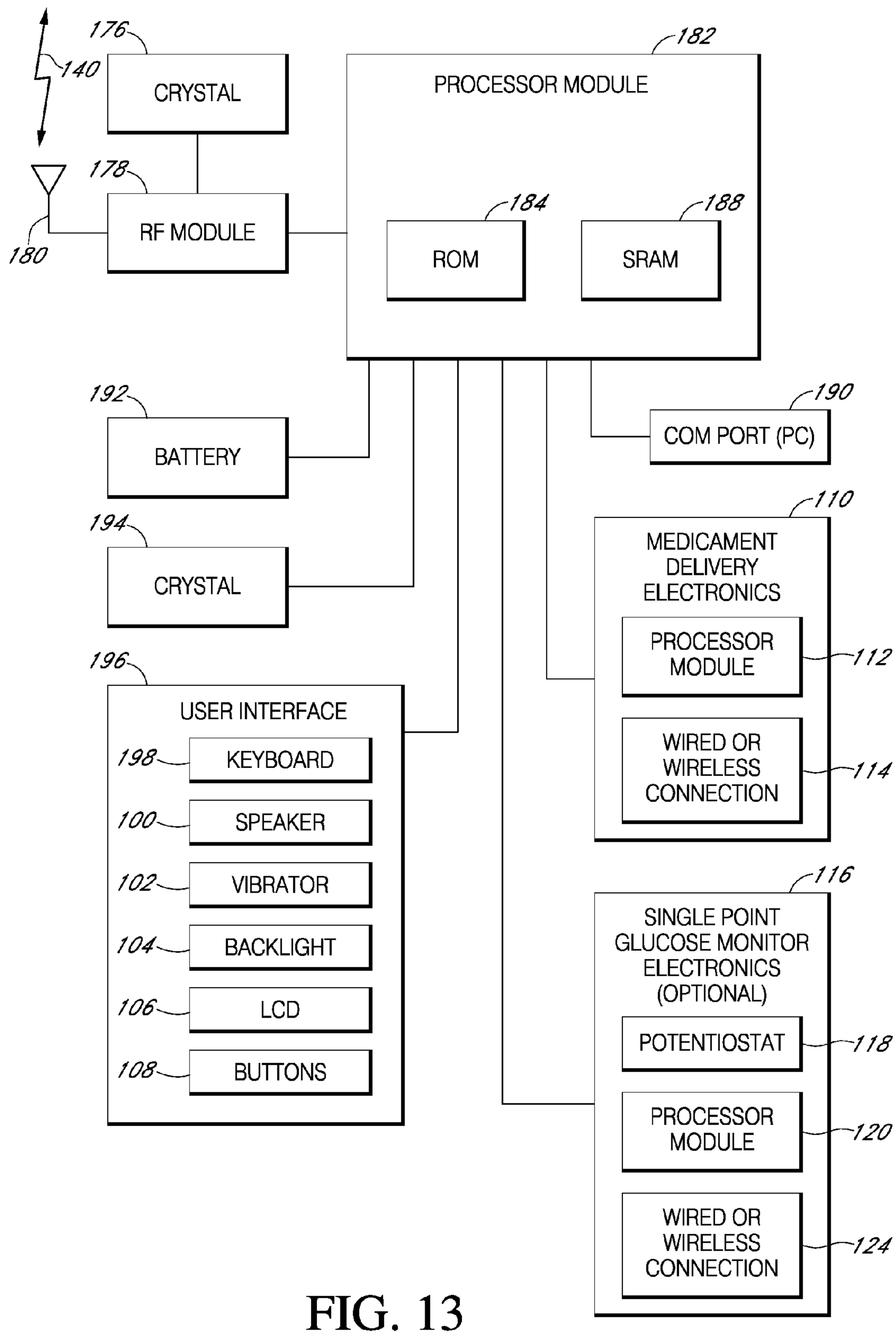
176
140
CRYSTAL
178
RF MODULE
180
182
PROCESSOR MODULE
184
ROM
188
SRAM
192
BATTERY
194
CRYSTAL
190
COM PORT (PC)
110
MEDICAMENT DELIVERY ELECTRONICS
PROCESSOR MODULE
112
WIRED OR WIRELESS CONNECTION
114
196
USER INTERFACE
198
KEYBOARD
100
SPEAKER
102
VIBRATOR
104
BACKLIGHT
106
LCD
108
BUTTONS
116
SINGLE POINT GLUCOSE MONITOR ELECTRONICS (OPTIONAL)
POTENTIOSTAT
118
PROCESSOR MODULE
120
WIRED OR WIRELESS CONNECTION
124

FIG. 13

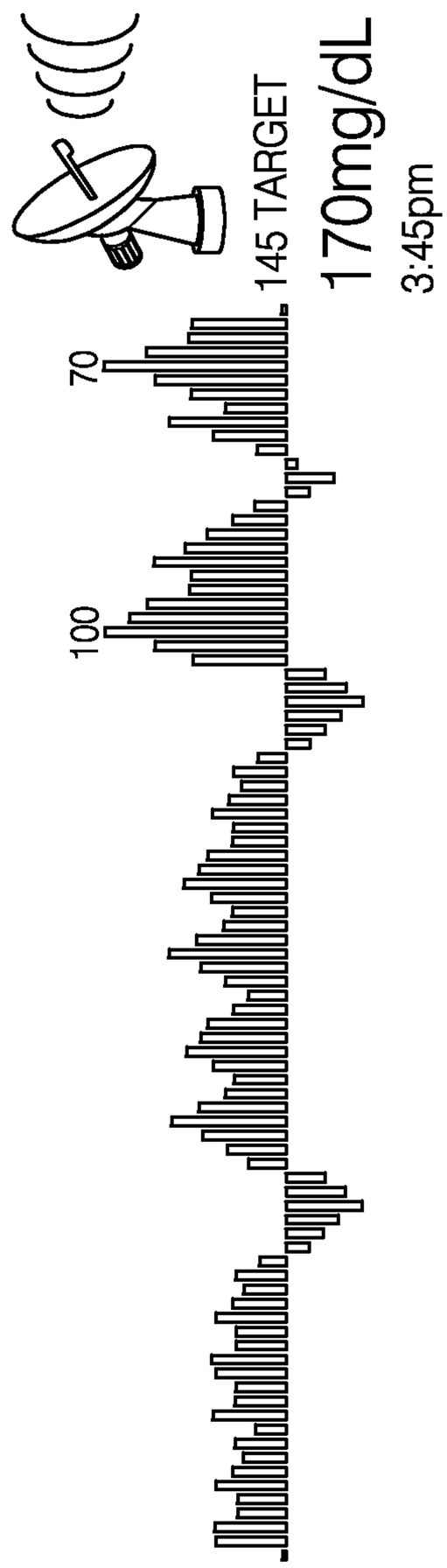

FIG. 14

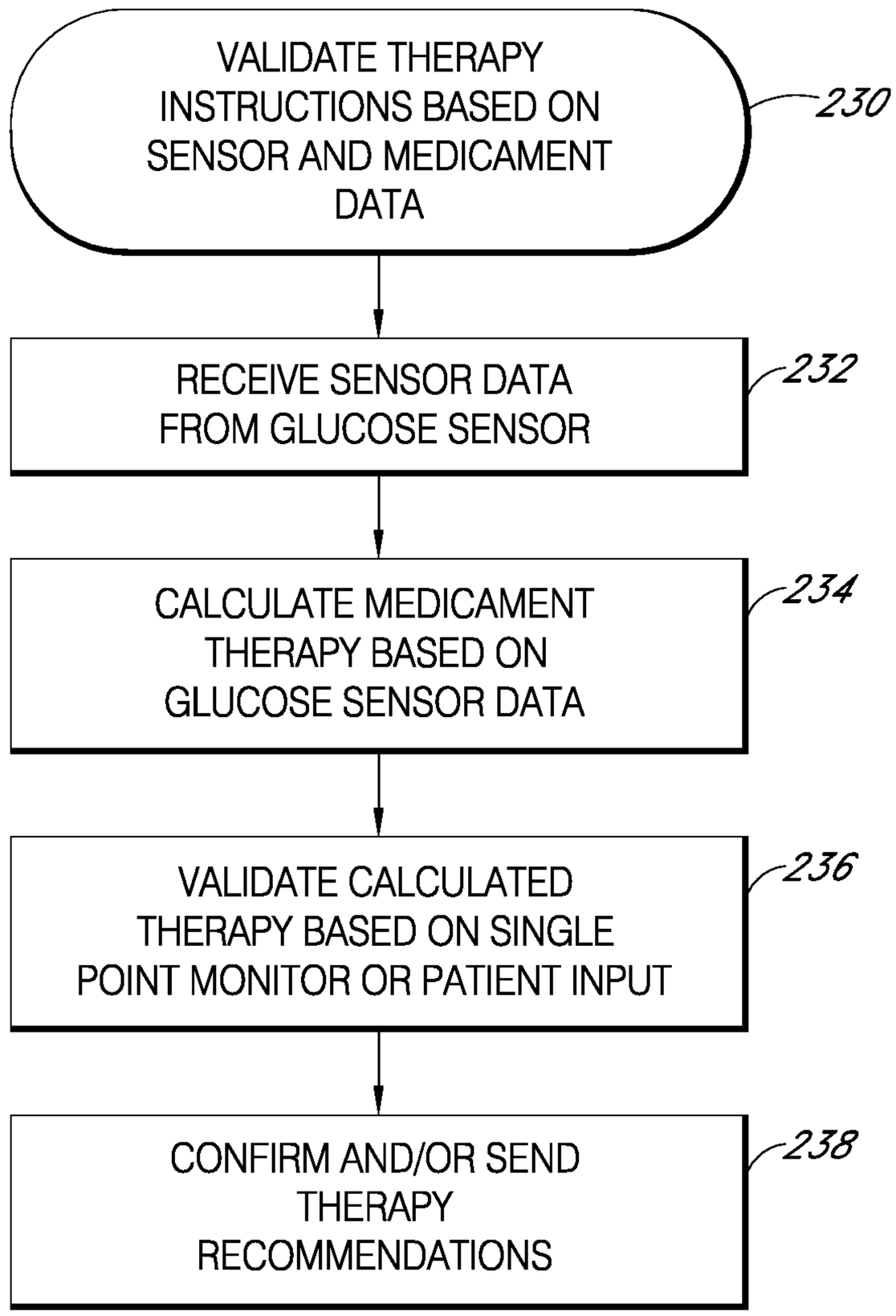
VALIDATE THERAPY INSTRUCTIONS BASED ON SENSOR AND MEDICAMENT DATA
230
RECEIVE SENSOR DATA FROM GLUCOSE SENSOR
232
CALCULATE MEDICAMENT THERAPY BASED ON GLUCOSE SENSOR DATA
234
VALIDATE CALCULATED THERAPY BASED ON SINGLE POINT MONITOR OR PATIENT INPUT
236
CONFIRM AND/OR SEND THERAPY RECOMMENDATIONS
238

FIG. 15

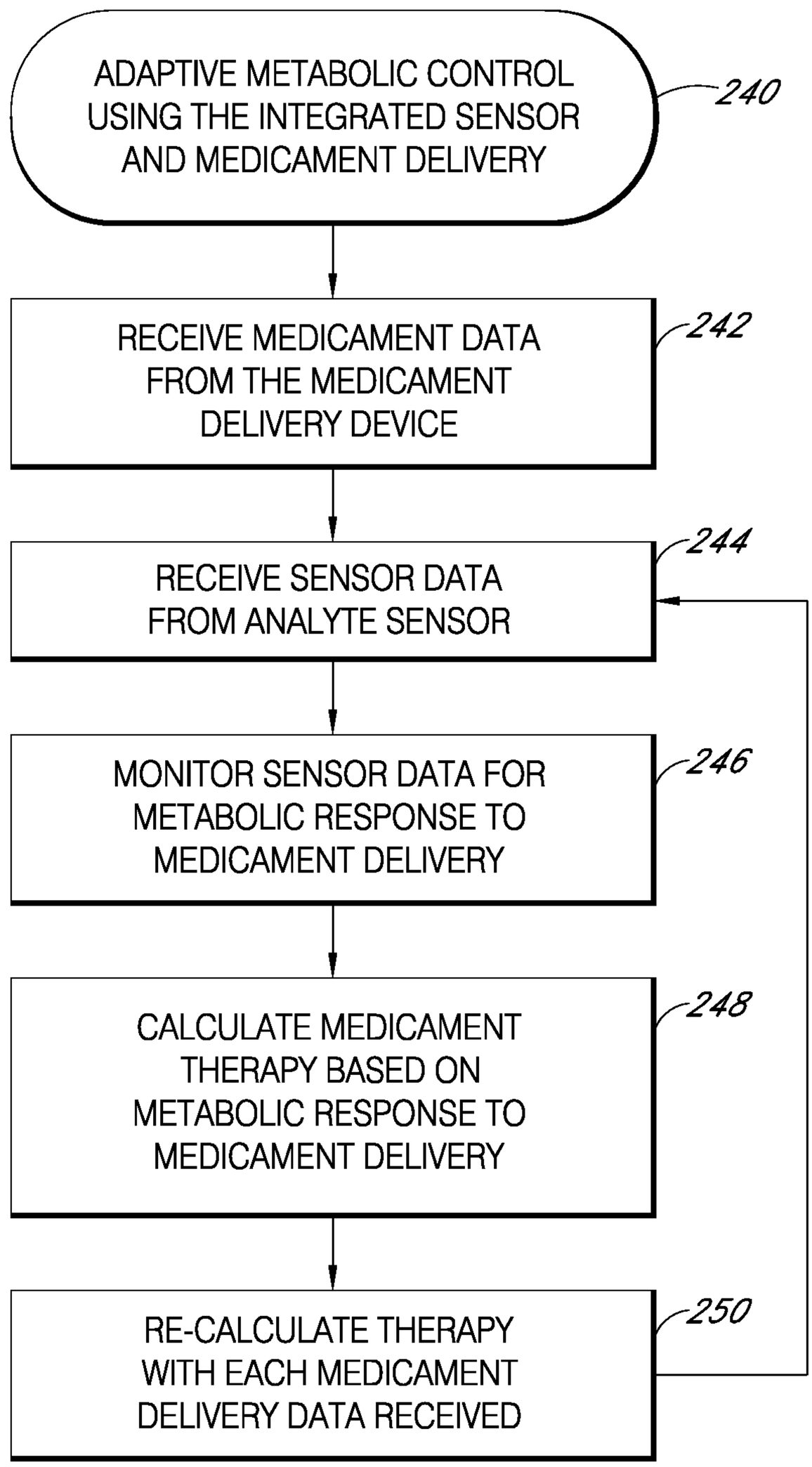
ADAPTIVE METABOLIC CONTROL USING THE INTEGRATED SENSOR AND MEDICAMENT DELIVERY
240
RECEIVE MEDICAMENT DATA FROM THE MEDICAMENT DELIVERY DEVICE
242
RECEIVE SENSOR DATA FROM ANALYTE SENSOR
244
MONITOR SENSOR DATA FOR METABOLIC RESPONSE TO MEDICAMENT DELIVERY
246
CALCULATE MEDICAMENT THERAPY BASED ON METABOLIC RESPONSE TO MEDICAMENT DELIVERY
248
RE-CALCULATE THERAPY WITH EACH MEDICAMENT DELIVERY DATA RECEIVED
250

FIG. 16

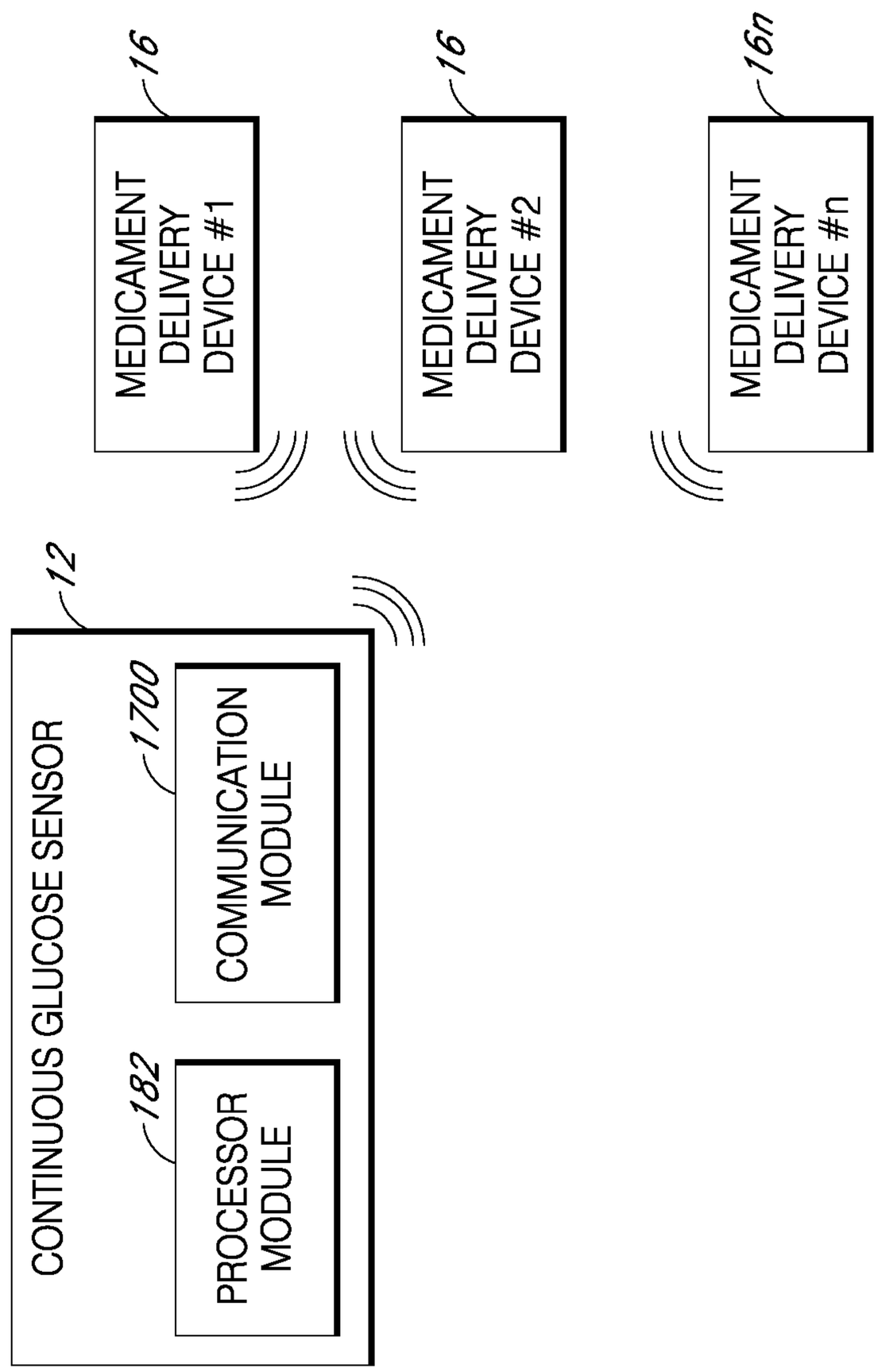
16
MEDICAMENT DELIVERY DEVICE #1
16
MEDICAMENT DELIVERY DEVICE #2
16n
MEDICAMENT DELIVERY DEVICE #n
12
CONTINUOUS GLUCOSE SENSOR
1700
COMMUNICATION MODULE
182
PROCESSOR MODULE

FIG. 17

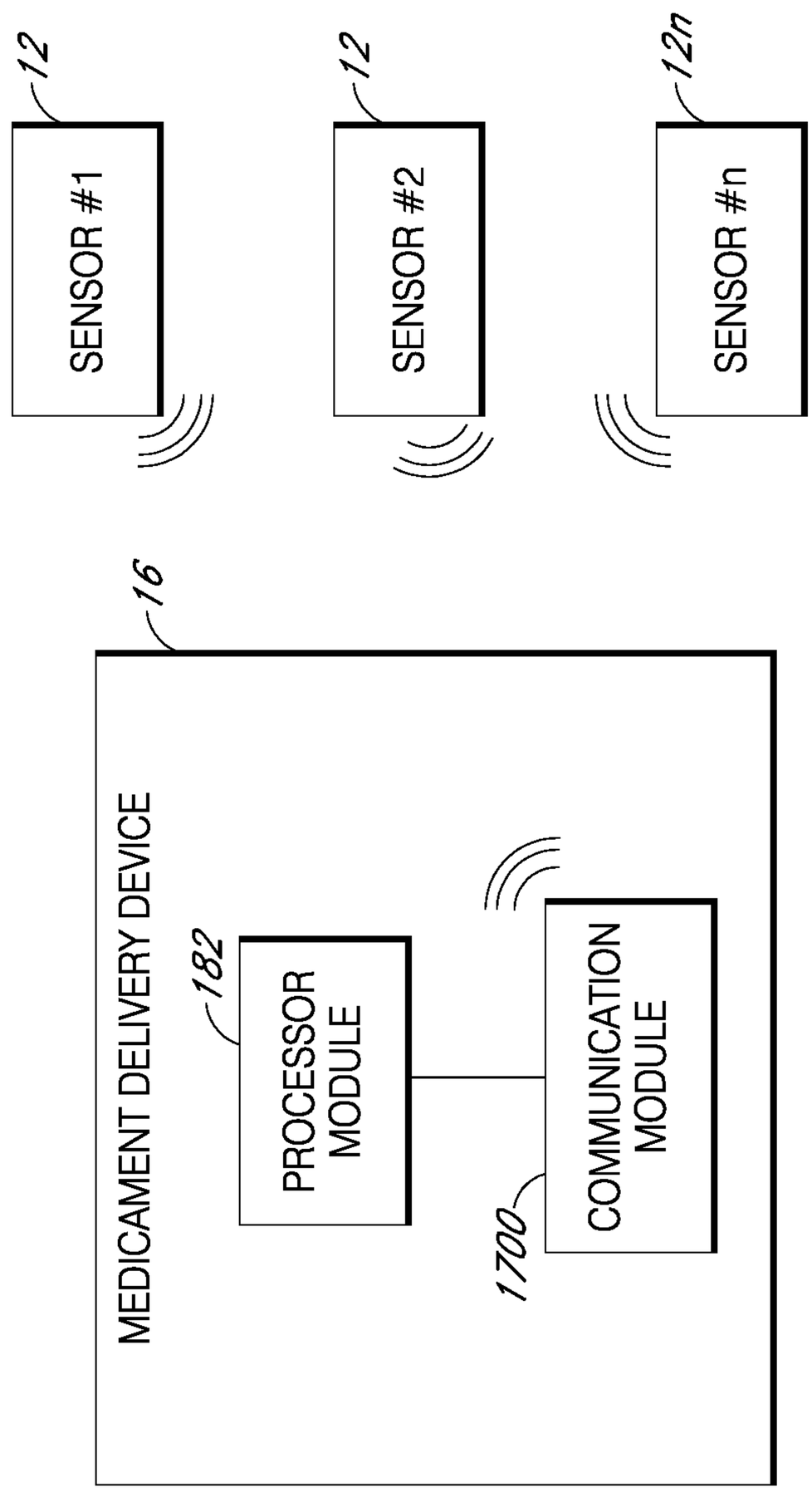
12
SENSOR #1
12
SENSOR #2
12n
SENSOR #n
16
MEDICAMENT DELIVERY DEVICE
182
PROCESSOR MODULE
1700
COMMUNICATION MODULE

FIG. 18

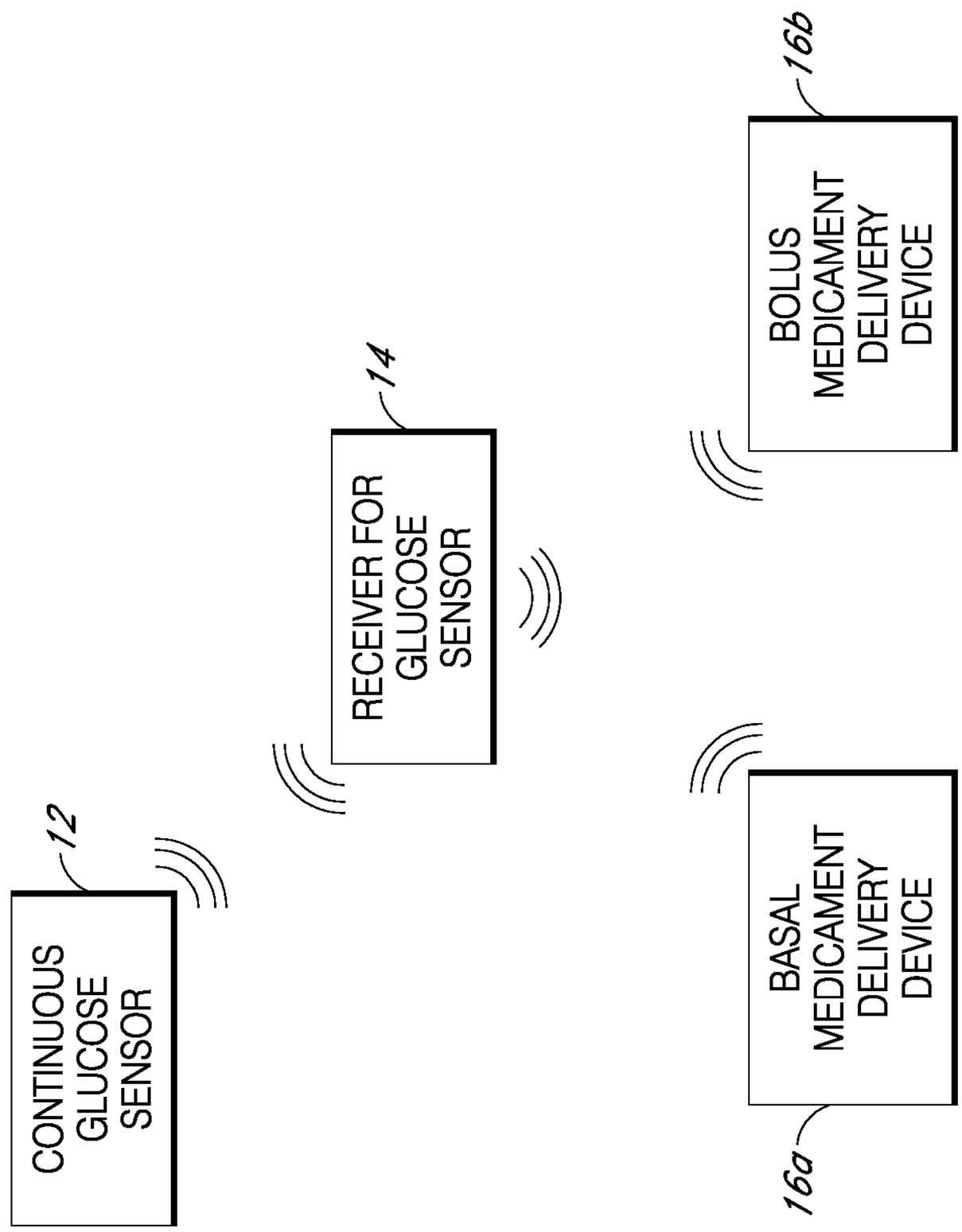
CONTINUOUS GLUCOSE SENSOR
12
RECEIVER FOR GLUCOSE SENSOR
14
BOLUS MEDICAMENT DELIVERY DEVICE
16b
BASAL MEDICAMENT DELIVERY DEVICE
16a

FIG. 19

INTEGRATED MEDICAMENT DELIVERY DEVICE FOR USE WITH CONTINUOUS ANALYTE SENSOR

Any and all priority claims identified in the Application Data Sheet, or any correction thereto, are hereby incorporated by reference under 37 CFR 1.57. This application is a continuation of U.S. application Ser. No. 12/133,786 filed Jun. 5, 2008, which claims the benefit of U.S. Provisional Application No. 60/942,787 filed Jun. 8, 2007, the disclosures of which are hereby expressly incorporated by reference in their entirety and are hereby expressly made a portion of this application.

FIELD OF THE INVENTION

The present invention relates generally to systems and methods monitoring glucose in a host. More particularly, the present invention relates to an integrated medicament delivery device and continuous glucose sensor.

BACKGROUND OF THE INVENTION

Diabetes mellitus is a disorder in which the pancreas cannot create sufficient insulin (Type I or insulin dependent) and/or in which insulin is not effective (Type 2 or non-insulin dependent). In the diabetic state, the victim suffers from high blood sugar, which can cause an array of physiological derangements (for example, kidney failure, skin ulcers, or bleeding into the vitreous of the eye) associated with the deterioration of small blood vessels. A hypoglycemic reaction (low blood sugar) can be induced by an inadvertent overdose of insulin, or after a normal dose of insulin or glucose-lowering agent accompanied by extraordinary exercise or insufficient food intake.

Conventionally, a diabetic person carries a self-monitoring blood glucose (SMBG) monitor, which typically comprises uncomfortable finger pricking methods. Due to the lack of comfort and convenience, a diabetic will normally only measures his or her glucose level two to four times per day. Unfortunately, these time intervals are so far spread apart that the diabetic will likely find out too late, sometimes incurring dangerous side effects, of a hyper- or hypoglycemic condition. In fact, it is not only unlikely that a diabetic will take a timely SMBG value, but the diabetic will not know if their blood glucose value is going up (higher) or down (lower) based on conventional methods, inhibiting their ability to make educated insulin therapy decisions.

Home diabetes therapy requires personal discipline of the user, appropriate education from a doctor, proactive behavior under sometimes-adverse situations, patient calculations to determine appropriate therapy decisions, including types and amounts of administration of insulin and glucose into his or her system, and is subject to human error. Technologies are needed that ease the burdens faced by diabetic patients, simplify the processes involved in treating the disease, and minimize user error which can cause unnecessarily dangerous situations in some circumstances.

SUMMARY OF THE INVENTION

Systems and methods for monitoring glucose are provided that offer one or more benefits and/or advantages, for example, easing the burdens faced by diabetic patients, simplifying the processes involved in treating diabetes, and minimizing user error which can cause unnecessarily dangerous situations in some circumstances.

Accordingly, in a first aspect, an integrated system for monitoring and treating diabetes is provided, the system comprising: a medicament injection pen configured and arranged for injecting an amount of a medicament into a host; and an integrated receiver configured and arranged to receive sensor data from a continuous glucose sensor, wherein the sensor data is indicative of a glucose concentration of the host in vivo, wherein the integrated receiver comprises electronics configured and arranged to process the sensor data.

In an embodiment of the first aspect, the electronics are further configured to calculate at least one of time of medicament therapy and amount of medicament therapy.

In an embodiment of the first aspect, the integrated receiver comprises a housing, wherein the medicament injection pen is integrally formed with the housing.

In an embodiment of the first aspect, the integrated receiver comprises a housing, and wherein the medicament injection pen is detachably connectable to the housing.

In an embodiment of the first aspect, communication between the medicament injection pen and the receiver is initiated based at least in part on detachable connection of the medicament injection pen and the housing.

In an embodiment of the first aspect, the integrated system further comprises a user interface configured and arranged for at least one of input of host information, output of sensor data, and medicament therapy.

In an embodiment of the first aspect, the user interface is further configured to display a graphical representation of at least one of sensor data and medicament delivery data, wherein a solid line represents at least one of a target glucose concentration and a range.

In an embodiment of the first aspect, the integrated electronics are configured and arranged to require validation prior to injecting an amount of medicament into the host.

In an embodiment of the first aspect, the receiver is configured to communicate in at least one of wiredly with a single-point glucose monitor and wirelessly with a single-point glucose monitor.

In an embodiment of the first aspect, the medicament injection pen comprises a motor.

In an embodiment of the first aspect, the motor is configured to set the amount of medicament.

In an embodiment of the first aspect, the motor is configured to control a rate of medicament injection into a host.

In an embodiment of the first aspect, the receiver is configured to remotely control the motor.

In an embodiment of the first aspect, the medicament injection pen and the receiver each comprise mutually engaging electrical contacts, and wherein the mutually engaging electrical contacts are configured to allow communication between the medicament injection pen and the receiver.

In an embodiment of the first aspect, the system is configured to initiate communication between the medicament injection pen and the receiver in response to engagement of the electrical contacts.

In an embodiment of the first aspect, the system is configured to communicate medicament delivery data between the medicament injection pen and the receiver in response to engagement of the electrical contacts.

In an embodiment of the first aspect, the integrated system further comprises a receptacle configured and arranged to receive at least one of parts associated with the medicament injection pen and accessories associated with the medicament injection pen.

In an embodiment of the first aspect, at least one of the parts associated with the medicament injection pen and accessories associated with the medicament injection pen comprise a medicament cartridge.

In an embodiment of the first aspect, the integrated system further comprises a medicament injection pen kit, wherein the medicament injection pen kit is configured to receive the medicament injection pen, and wherein the medicament injection pen kit comprises a housing comprising a user interface, and wherein the integrated receiver is located within the housing and operably connected to the user interface.

In a second aspect an integrated system for monitoring and treating diabetes is provided, the system comprising: a receiver configured and arranged to receive sensor data from an operably connected continuous glucose sensor, wherein the continuous glucose sensor is configured and arranged to generate sensor data associated with a glucose concentration of a host; integrated electronics configured to process the sensor data and to generate a medicament therapy; and a medicament injection pen configured to inject an amount of medicament into the host.

In an embodiment of the second aspect, the medicament therapy comprises at least one of an amount of medicament therapy and a time of medicament therapy delivery.

In an embodiment of the second aspect, the receiver and the medicament injection pen are integrally formed.

In an embodiment of the second aspect, the integrated system further comprises a receptacle configured and arranged to receive at least one of parts associated with the medicament injection pen and accessories associated with the medicament injection pen.

In an embodiment of the second aspect, the medicament injection pen is detachably connectable to the receiver.

In an embodiment of the second aspect, the medicament injection pen and receiver each comprise mutually engaging electrical contacts, and wherein the mutually engaging electrical contacts are configured to allow communication between the medicament injection pen and the receiver.

In an embodiment of the second aspect, the system is configured to initiate communication between the medicament injection pen and the receiver in response to engagement of the mutually engaging electrical contacts.

In an embodiment of the second aspect, the system is configured to communicate the medicament therapy between the receiver and the medicament injection pen in response to engagement of the mutually engaging electrical contacts.

In an embodiment of the second aspect, the integrated system further comprises a housing integrally formed with the receiver, wherein the integrated electronics are located with the housing.

In an embodiment of the second aspect, the medicament injection pen is detachably connectable with the housing.

In an embodiment of the second aspect, the receiver further comprises a user interface, wherein the integrated electronics are configured to display at least one of sensor data and the medicament therapy thereon.

In an embodiment of the second aspect, the receiver comprises a housing, and wherein the user interface is located on the receiver housing.

In an embodiment of the second aspect, the integrated system further comprises a user interface configured to display at least one of the sensor data and the medicament therapy.

In an embodiment of the second aspect, the integrated electronics are further configured to display a representation of medicament delivery on the user interface, and wherein the representation of medicament delivery is substantially adjacent to substantially time-corresponding sensor data.

In an embodiment of the second aspect, the integrated electronics are further configured to display a representation of sensor data on the user interface, wherein the representation comprises at least one of a target glucose concentration and a range.

In an embodiment of the second aspect, the user interface comprises a flexible LED screen operably connected to at least one of the receiver and the medicament injection pen, and wherein the integrated electronics are configured to display continuous glucose sensor data on the flexible LED screen.

In an embodiment of the second aspect, the user interface comprises an image projection system configured to project continuous glucose sensor data onto a surface.

In an embodiment of the second aspect, the medicament injection pen comprises a motor.

In an embodiment of the second aspect, the motor is configured to automatically set the amount of medicament.

In an embodiment of the second aspect, the motor is configured to control a rate of medicament injection into the host.

In an embodiment of the second aspect, the receiver is configured to remotely control the motor.

In an embodiment of the second aspect, the integrated system further comprises a medicament injection pen kit comprising the receiver and the integrated electronics, wherein the medicament injection pen kit is configured to receive the medicament injection pen.

In an embodiment of the second aspect, the integrated system further comprises a user interface, wherein the integrated electronics are configured to display at least one of sensor data and the medicament therapy thereon.

In an embodiment of the second aspect, the medicament injection pen kit further comprises a receptacle configured and arranged to receive at least one of a medicament cartridge and a medicament injection pen needle.

In a third aspect, a method for monitoring and treating diabetes using an integrated diabetes monitoring and treatment device is provided, the method comprising: receiving sensor data from a continuous glucose sensor, wherein the sensor data is associated with a glucose concentration of a host; processing the sensor data; generating a medicament therapy; and injecting an amount of medicament into the host based at least in part on the generated medicament therapy.

In an embodiment of the third aspect, the step of generating a medicament therapy comprises determining at least one of an amount of medicament to be delivered and a time of medicament delivery.

In an embodiment of the third aspect, the step of injecting comprises setting the amount of medicament.

In an embodiment of the third aspect, the step of setting the amount of medicament comprises setting a medicament injection rate.

In an embodiment of the third aspect, the step of setting the amount of medicament comprises remotely setting the amount of medicament.

In a fourth aspect, an integrated system for monitoring and treating diabetes is provided, the system comprising: a sensor, the sensor comprising a continuous glucose sensor configured to continuously detect a signal associated with a glucose concentration of a host, a processor module configured and arranged to process the signal to generate a therapy, and a communication module configured and arranged to

communicate the therapy instruction to a medicament delivery device; and at least one medicament delivery device configured and arranged to deliver a medicament therapy to the host based at least in part on the communicated therapy instruction.

In an embodiment of the fourth aspect, the medicament therapy comprises at least one of a medicament type, a medicament amount, and a delivery time.

In an embodiment of the fourth aspect, the sensor further comprises an input module configured to receive host information, and wherein the processor module is further configured to process the host information.

In an embodiment of the fourth aspect, the input module is configured to receive information from at least one of a user interface, a medicament delivery device, an infusion pump, a patient monitor, and a single-point glucose monitor.

In an embodiment of the fourth aspect, the integrated system further comprises a display module configured and arranged to display of host information, sensor data, the therapy instruction, an alert and/or an alarm.

In an embodiment of the fourth aspect, the communication module is configured to communication wirelessly with the medicament delivery device.

In an embodiment of the fourth aspect, the communication module is further configured to communicate the therapy instruction responsive to interrogation by the medicament delivery device.

In an embodiment of the fourth aspect, the medicament delivery device is configured for communication with a plurality of sensors.

In an embodiment of the fourth aspect, the medicament delivery device is configured for medicament delivery to a plurality of different hosts, based at least in part on a therapy instruction from a sensor.

In an embodiment of the fourth aspect, the medicament delivery device is a hand-held injector pen.

In an embodiment of the fourth aspect, the medicament delivery device is configured and arranged for aseptic medicament delivery to a plurality of hosts.

In an embodiment of the fourth aspect, at least one of the sensor and delivery device is configured transmit data to a data repository.

In a fifth aspect, a method for monitoring and treating diabetes using an integrated diabetes monitoring and treatment system is provided, the method comprising: continuously detecting a signal associated with a glucose concentration of a host; processing the signal; generating a therapy instruction; communicating the therapy instruction to at least one medicament delivery device; and delivering a medicament therapy to the host based at least in part on the communicated therapy instruction.

In an embodiment of the fifth aspect, the method further comprises receiving and processing host information.

In an embodiment of the fifth aspect, the method further comprises remotely programming the system.

In an embodiment of the fifth aspect, the step of generating the therapy instruction comprises determining at least one of a type of medicament, a medicament amount, and a delivery time.

In an embodiment of the fifth aspect, the method further comprises receiving information from at least one of a user interface, a medicament delivery device, an infusion pump, a patient monitor, and a single-point glucose monitor.

In an embodiment of the fifth aspect, the method further comprises displaying at least one of host information, sensor data, the therapy instruction, an alert, and an alarm.

In an embodiment of the fifth aspect, the step of communicating further comprises communicating wirelessly.

In an embodiment of the fifth aspect, the step of communicating further comprises communicating the therapy instruction based at least in part on interrogation by the medicament delivery device.

In an embodiment of the fifth aspect, the step of communicating further comprises communicating to a medicament delivery device configured for medicament delivery to a plurality of hosts, based at least in part on a therapy instruction communicated by an integrated system worn by each host.

In an embodiment of the fifth aspect, the step of communicating further comprises communicating to a hand-held injector pen.

In an embodiment of the fifth aspect, the step of communicating further comprises communicating to a medicament delivery device configured and arranged for aseptic medicament delivery to a plurality of hosts.

In an embodiment of the fifth aspect, the step of communicating further comprises transmitting data to a data repository.

In a sixth aspect, a medicament delivery device for monitoring and treating at least one of a plurality of hosts is provided, the medicament delivery device comprising: a communication module configured to interrogate a continuous glucose sensor and to receive sensor data therefrom, wherein the sensor data comprises a signal associated with an analyte concentration of a host; a processor module configured to process the sensor data and calculate a medicament therapy, wherein the processor module comprises programming for calculating the medicament therapy based at least in part on the sensor data; and a hand-held injector pen configured and arranged to deliver a medicament to the host, based at least in part on the medicament therapy.

In an embodiment of the sixth aspect, the medicament delivery device further comprises a user interface configured and arranged for at least one of input of at least some medical information and display of at least some medical information, wherein medical information comprises at least one of host information, received sensor data, processed sensor data, the calculated medicament therapy, a delivered medicament therapy, an instruction, an alert, an alarm, and a failsafe.

In an embodiment of the sixth aspect, the user interface is detachably connected to the hand-held injector pen.

In an embodiment of the sixth aspect, host information comprises at least one of a host information, type of medicament to be delivered, a glucose target, predicted hypoglycemia, predicted hypoglycemia, a therapy protocol, an alert, and an alarm.

In an embodiment of the sixth aspect, the processor module is further configured for validation of the medicament therapy.

In an embodiment of the sixth aspect, the medicament therapy comprises at least one of a type of medicament to be delivered, an amount of medicament to be delivered and a time of delivery.

In an embodiment of the sixth aspect, the communication module is further configured to communicate treatment information to a central monitor, wherein the treatment information comprises at least one of host information, sensor data, the medicament therapy, and delivered medicament information.

In an embodiment of the sixth aspect, the communication module is configured for wireless communication.

In an embodiment of the sixth aspect, the wireless communication is selected from the group consisting of RF communication, IR communication, Bluetooth communication, and inductive coupling.

In an embodiment of the sixth aspect, the communication module and the medicament delivery device are integrally formed.

In an embodiment of the sixth aspect, the communication module and the medicament delivery device are detachably connected.

In an embodiment of the sixth aspect, the injector pen is configured for aseptic medicament delivery to a plurality of hosts.

In an embodiment of the sixth aspect, the injector pen is configured and arranged for pneumatic aseptic medicament delivery.

In an embodiment of the sixth aspect, the injector pen comprises a cartridge comprising a plurality of single-use needles.

In an embodiment of the sixth aspect, the cartridge is configured and arranged for automatic installation of a clean needle after a medicament delivery.

In a seventh aspect, a method for monitoring and treating diabetes in one of a plurality of hosts is provided, the method comprising: interrogating a continuous glucose sensor; receiving sensor data from the continuous glucose sensor, wherein the sensor data comprises a signal associated with an analyte concentration of a first host; processing the sensor data; calculating a medicament therapy based at least in part on the sensor data; and delivering an amount of a medicament to the first host, based at least in part on the calculated medicament therapy.

In an embodiment of the seventh aspect, the steps of interrogating, receiving, processing, calculating and delivering are repeated with a second host.

In an embodiment of the seventh aspect, the method further comprises a step of at least one of inputting at least some medical information and displaying at least some medical information, wherein medical information comprises at least one of host information, received sensor data, processed sensor data, the calculated medicament therapy, a delivered medicament therapy, an instruction, an alert, an alarm, and a failsafe.

In an embodiment of the seventh aspect, the method further comprises detachably connecting a user interface.

In an embodiment of the seventh aspect, the method further comprises validating the medicament therapy.

In an embodiment of the seventh aspect, the method further comprises communicating treatment information to a central monitor, wherein the treatment information comprises at least one of host information, sensor data, the medicament therapy, and delivered medicament information.

In an embodiment of the seventh aspect, the step of communicating comprises communicating wirelessly.

In an embodiment of the seventh aspect, the steps of interrogating and receiving comprise communicating wirelessly.

In an embodiment of the seventh aspect, the step of delivering comprises aseptically delivering the medicament to a plurality of hosts.

In an embodiment of the seventh aspect, the step of delivering comprises pneumatically aseptically delivering the medicament.

In an embodiment of the seventh aspect, the step of delivering comprises automatically installing a clean needle after medicament delivery.

In an eighth aspect, an integrated system for monitoring and treating diabetes is provided, the system comprising: a receiver configured and arranged to receive continuous glucose sensor data from a continuous glucose sensor; a processor module configured to process the continuous glucose sensor data and to provide first and second medicament dosing information based at least in part on the continuous glucose sensor data; and a communication module configured and arranged to communicate the medicament dosing information with a first integrated medicament delivery device and a second integrated medicament delivery device.

In an embodiment of the eighth aspect, the first medicament dosing information comprises a basal medicament dose and the first integrated medicament delivery device comprises a basal medicament delivery device.

In an embodiment of the eighth aspect, the basal medicament delivery device comprises a medicament pump configured to infuse a first medicament.

In an embodiment of the eighth aspect, the processor module comprises programming to calculate a basal dose based at least in part on the continuous glucose sensor data.

In an embodiment of the eighth aspect, the second medicament dosing information comprises a bolus medicament dose and the second integrated medicament delivery device comprises a bolus medicament delivery device.

In an embodiment of the eighth aspect, the processor module comprises programming to calculate a bolus dose based at least in part on the continuous glucose sensor data.

In an embodiment of the eighth aspect, the bolus medicament delivery device comprises a hand-held medicament injection pen configured to infuse a second medicament.

In an embodiment of the eighth aspect, the bolus medicament delivery device comprises a motor configured to automatically set the amount of medicament and the medicament dosing information comprises an instruction for the medicament delivery device to automatically portion out the bolus dose, whereby the portioned out bolus dose can be manually delivered by the host.

In an embodiment of the eighth aspect, the bolus medicament delivery device comprises a motor to control a rate of medicament injection into the host.

In an embodiment of the eighth aspect, the integrated system further comprises a user interface configured and arranged to display at least one of continuous glucose sensor data and medicament dosing information.

In an embodiment of the eighth aspect, the user interface is further configured for input of at least one of host information and medicament delivery device information.

In an embodiment of the eighth aspect, the host information comprises at least one of host identity, host physical state, target glucose concentration and type of medicament to be delivered.

In an embodiment of the eighth aspect, the medicament delivery information comprises at least one of host identity, identification of a functionally connected medicament delivery device, a type of medicament to be delivered, a medicament delivery profile, a medicament delivery protocol, and a failsafe.

In an embodiment of the eighth aspect, the communication module comprises a communication module configured and arranged to interrogate and/or provide medicament dosing information to the first medicament delivery device and the second medicament delivery device.

In an embodiment of the eighth aspect, the receiver comprises the communication module and the processor

module, and wherein the receiver wirelessly communicates with the first and second medicament delivery devices.

In an embodiment of the eighth aspect, the receiver comprises the communication module and the processor module, and wherein the receiver is physically connected to at least one of the first medicament delivery device and the second medicament delivery device.

In a ninth aspect, a method of self-monitoring and self-treating diabetes is provided, the method comprising: receiving continuous glucose sensor data from an operably connected continuous glucose sensor; processing the continuous glucose sensor data; calculating medicament dosing information for at least two integrated medicament delivery devices based at least in part on the continuous glucose sensor data; and communicating the medicament dosing information with the integrated medicament delivery devices.

In an embodiment of the ninth aspect, the step of calculating medicament dosing information comprises calculating a basal dose based at least in part on the continuous glucose sensor data.

In an embodiment of the ninth aspect, the step of communicating comprises communicating the basal medicament dose to a medicament pump.

In an embodiment of the ninth aspect, the method further comprises infusing the basal medicament dose.

In an embodiment of the ninth aspect, the step of providing medicament dosing information comprises calculating a bolus dose based at least in part on the continuous glucose sensor data.

In an embodiment of the ninth aspect, the step of communicating comprises communicating the bolus medicament dose to a hand-held injector pen.

In an embodiment of the ninth aspect, the step of delivering comprises injecting the bolus medicament dose.

In an embodiment of the ninth aspect, the step of communicating the bolus dose further comprises providing an instruction to automatically set at least one of the amount of medicament and rate of delivery based at least in part on the medicament dosing information.

In an embodiment of the ninth aspect, the step of delivering the bolus dose further comprises automatically setting the amount of medicament based at least in part on the provided instruction.

In an embodiment of the ninth aspect, the step of delivering the bolus dose further comprises automatically setting the rate of delivery based at least in part on the provided instruction.

In an embodiment of the ninth aspect, the method further comprises displaying at least one of continuous glucose sensor data and medicament dosing information.

In an embodiment of the ninth aspect, the method further comprises inputting at least one of host information and medicament delivery device information.

In an embodiment of the ninth aspect, the step of communicating comprises wirelessly communicating.

In an embodiment of the ninth aspect, the step of wirelessly communicating comprises interrogating and/or providing medicament dosing information.

BRIEF DESCRIPTION OF THE DRAWINGS

FIG. **1** is a block diagram of an integrated system of the preferred embodiments, including a continuous glucose sensor, a receiver for processing and displaying sensor data, a hand-held medicament injection pen, and an optional single point glucose-monitoring device.

FIG. **2**A is a perspective view of a wholly implantable continuous glucose sensor, in one embodiment.

FIG. **2**B is a perspective view of an in vivo portion of a continuous glucose sensor, in one embodiment.

FIG. **2**C is a cross-section of the continuous glucose sensor of FIG. **2**B, taken on line **2**C-**2**C, in one embodiment.

FIG. **2**D is a perspective view of an in vivo portion of a continuous glucose sensor including two working electrodes, in one embodiment.

FIG. **2**E illustrates a continuous glucose sensor implanted in a vein/artery, in one embodiment.

FIG. **3** is a perspective view of an integrated system in one embodiment, showing an LCD screen on a hand-held medicament injection pen housing.

FIG. **4** is a perspective view of an integrated system in another embodiment, showing an LCD screen on a hand-held medicament injection pen housing.

FIG. **5** is a perspective view of an integrated system in another embodiment, showing a housing configured to receive a hand-held medicament injection pen, wherein the housing includes an LCD screen thereon.

FIG. **6** is a perspective view of an integrated system in another embodiment, showing a housing configured to receive a hand-held medicament injection pen, wherein the housing includes an LCD screen thereon.

FIG. **7** is a perspective view of an integrated system in another embodiment, showing a housing configured to receive a hand-held medicament injection pen, a receiver, integrated electronics, and a user interface.

FIG. **8** is a perspective view of an integrated system in another embodiment, showing a hand-held medicament injection pen, a receiver, integrated electronics, and a user interface integrally formed and/or incorporated therein.

FIG. **9** is a perspective view of an integrated system in another embodiment, showing a receiver housing including a receiver, integrated electronics, a user interface, and a hand-held medicament injection pen integrally formed therewith and/or incorporated therein.

FIG. **10** is a perspective view of an integrated system in another embodiment, showing a receiver housing including a receiver, integrated electronics, a user interface, and a hand-held medicament injection pen integrally formed therewith and/or incorporated therein.

FIG. **11** is a perspective view of an integrated system showing an integrated housing including a receiver, integrated electronics, a user interface, and a hand-held medicament injection pen, wherein the housing further includes a cap for the hand-held medicament injection pen.

FIG. **12** is a perspective view of an integrated system showing an integrated housing including a receiver, integrated electronics, a user interface, and a hand-held medicament injection pen, wherein the housing further includes a cap.

FIG. **13** is a block diagram that illustrates integrated electronics in one embodiment.

FIG. **14** is graphical representation of integrated data that can be displayed on an LCD screen, for example, in one embodiment.

FIG. **15** is a flow chart that illustrates the process of validating therapy instructions prior to medicament delivery in one embodiment.

FIG. **16** is a flow chart that illustrates the process of providing adaptive metabolic control using an integrated sensor and hand-held medicament injection pen in one embodiment.

FIG. **17** is a block diagram illustrating an integrated system, in one embodiment, including a continuous glucose sensor and a plurality of hand-held medicament injection pens, in one embodiment.

FIG. **18** is a block diagram illustrating an integrated system, in one embodiment, including a plurality of continuous glucose sensors and a hand-held medicament injection pen, in one embodiment.

FIG. **19** is a block diagram illustrating an integrated system, in one embodiment, including a continuous glucose sensor, a receiver, a basal medicament delivery device and a bolus medicament delivery device, in one embodiment.

DETAILED DESCRIPTION OF THE PREFERRED EMBODIMENT

The following description and examples illustrate some exemplary embodiments of the disclosed invention in detail. Those of skill in the art will recognize that there are numerous variations and modifications of this invention that are encompassed by its scope. Accordingly, the description of a certain exemplary embodiment should not be deemed to limit the scope of the present invention.

Definitions

In order to facilitate an understanding of the preferred embodiments, a number of terms are defined below.

The term "algorithm" as used herein is a broad term, and is to be given its ordinary and customary meaning to a person of ordinary skill in the art (and is not to be limited to a special or customized meaning), and refers without limitation to a computational process (for example, programs) involved in transforming information from one state to another, for example, by using computer processing.

The term "basal," as used herein is a broad term, and is to be given its ordinary and customary meaning to a person of ordinary skill in the art (and is not to be limited to a special or customized meaning), and refers without limitation to the minimum required rate or other value for something to function. For example, in the case of medicament therapy, the term "basal rate" can refer to a regular (e.g., in accordance with fixed order or procedure, such as regularly scheduled for/at a fixed time), periodic or continuous delivery of low levels of medicament, such as but not limited to throughout a 24-hour period.

The term "basal profile," as used herein is a broad term, and is to be given its ordinary and customary meaning to a person of ordinary skill in the art (and is not to be limited to a special or customized meaning), and refers without limitation to a medicament delivery schedule that includes one or more blocks of time (e.g., time blocks), wherein each block is associated with a maximum medicament delivery rate.

The term "biological sample" as used herein is a broad term, and is to be given its ordinary and customary meaning to a person of ordinary skill in the art (and is not to be limited to a special or customized meaning), and refers without limitation to sample of a host body, for example blood, interstitial fluid, spinal fluid, saliva, urine, tears, sweat, or the like.

The term "bolus," as used herein is a broad term, and is to be given its ordinary and customary meaning to a person of ordinary skill in the art (and is not to be limited to a special or customized meaning), and refers without limitation to a single dose of medicament, usually given over a short, defined period of time. In one exemplary embodiment, a bolus of medicament is calculated and/or estimated to be sufficient to cover an expected rise in blood glucose, such as the rise that generally occurs during/after a meal.

The term "continuous (or continual) analyte sensing" as used herein is a broad term, and is to be given its ordinary and customary meaning to a person of ordinary skill in the art (and is not to be limited to a special or customized meaning), and refers without limitation to the period in which monitoring of analyte concentration is continuously, continually, and or intermittently (regularly or irregularly) performed, for example, about every 5 to 10 minutes.

The phrase "continuous glucose sensing" as used herein is a broad term, and is to be given its ordinary and customary meaning to a person of ordinary skill in the art (and is not to be limited to a special or customized meaning), and refers without limitation to the period in which monitoring of plasma glucose concentration is continuously or continually performed, for example, at time intervals ranging from fractions of a second up to, for example, 1, 2, or 5 minutes, or longer.

The term "count" as used herein is a broad term, and is to be given its ordinary and customary meaning to a person of ordinary skill in the art (and is not to be limited to a special or customized meaning), and refers without limitation to a unit of measurement of a digital signal. For example, a raw data stream or raw data signal measured in counts is directly related to a voltage (for example, converted by an A/D converter), which is directly related to current from the working electrode.

The term "electrochemically reactive surface" as used herein is a broad term, and is to be given its ordinary and customary meaning to a person of ordinary skill in the art (and is not to be limited to a special or customized meaning), and refers without limitation to the surface of an electrode where an electrochemical reaction takes place. For example, a working electrode measures hydrogen peroxide produced by the enzyme-catalyzed reaction of the analyte detected, which reacts to create an electric current. Glucose analyte can be detected utilizing glucose oxidase, which produces H_2O_2 as a byproduct. H_2O_2 reacts with the surface of the working electrode, producing two protons ($2H^+$), two electrons ($2e^-$) and one molecule of oxygen (O_2), which produces the electronic current being detected.

The term "electronic connection" as used herein is a broad term, and is to be given its ordinary and customary meaning to a person of ordinary skill in the art (and is not to be limited to a special or customized meaning), and refers without limitation to any electronic connection known to those in the art. In one exemplary embodiment, a connection is between the sensing region electrodes and the electronic circuitry of a device that provides electrical communication, such as mechanical (for example, pin and socket) or soldered electronic connections.

The term "host" as used herein is a broad term, and is to be given its ordinary and customary meaning to a person of ordinary skill in the art (and is not to be limited to a special or customized meaning), and refers without limitation to mammals, particularly humans.

The term "host information" as used herein is a broad term, and is to be given its ordinary and customary meaning to a person of ordinary skill in the art (and is not to be limited to a special or customized meaning), and refers without limitation to information related to the host, such as a patient using an integrated system of the preferred embodiments, such as but not limited to a continuous glucose sensor, a medicament delivery device, and/or receiving medicament therapy. In some embodiments, the medicament is insulin or

another injectable diabetes medicament, such as but not limited to pramlintide, exenatide, amylin, glucagon, and the like. In some embodiments, host information includes but is not limited to information relating to the host and his/her therapy, such as but not limited to information used to identify the host (e.g., in a clinical setting), such as a host identification number and/or code, host physical characteristics, host health information (e.g., medical conditions, diseases, illnesses), host exercise information, a therapy protocol, such as but not limited to a medicament therapy protocol assigned to the host, including but not limited to one or more types of medicament the host is to receive and/or target glucose concentration(s), an alarm, an alert and/or an instruction.

The term "integrated," as used herein is a broad term, and is to be given its ordinary and customary meaning to a person of ordinary skill in the art (and is not to be limited to a special or customized meaning), and refers without limitation to united, bringing together processes or functions.

The term "interrogate," as used herein is a broad term, and is to be given its ordinary and customary meaning to a person of ordinary skill in the art (and is not to be limited to a special or customized meaning), and refers without limitation to give or send out a signal to (e.g., as a transponder) for triggering an appropriate response to obtain data or information from (a device, database, etc.).

The term "medicament therapy," as used herein is a broad term, and is to be given its ordinary and customary meaning to a person of ordinary skill in the art (and is not to be limited to a special or customized meaning), and refers without limitation to an identity, an amount and/or schedule of a medicament to be delivered to the host. In some embodiments, the medicament is a diabetes-treating medicament formulated for injection, such as but not limited to insulin, pramlintide, exenatide, amylin, glucagon, derivatives thereof, and the like. In other embodiments, the medicament is one for treating another disease and is formulated for injection.

The terms "operatively connected," "operatively linked," "operably connected," and "operably linked" as used herein are broad terms, and are to be given their ordinary and customary meaning to a person of ordinary skill in the art (and are not to be limited to a special or customized meaning), and refer without limitation to one or more components linked to one or more other components. The terms can refer to a mechanical connection, an electrical connection, or a connection that allows transmission of signals between the components (e.g., including a wireless connection). For example, one or more electrodes can be used to detect the amount of analyte in a sample and to convert that information into a signal; the signal can then be transmitted to a circuit. In such an example, the electrode is "operably linked" to the electronic circuitry.

The terms "processor module" and "processor" as used herein are broad terms, and are to be given their ordinary and customary meaning to a person of ordinary skill in the art (and are not to be limited to a special or customized meaning), and refer without limitation to a computer system, state machine, processor, or the like designed to perform arithmetic or logic operations using logic circuitry that responds to and processes the basic instructions that drive a computer. In some embodiments, the term processor includes storage, e.g., ROM and RAM.

The term "range," as used herein is a broad term, and is to be given its ordinary and customary meaning to a person of ordinary skill in the art (and is not to be limited to a special or customized meaning), and refers without limitation to a sequence, series, or scale between limits (e.g., maximum and minimum values). For example, a range of glucose concentrations can include glucose concentrations from 60 mg/dl to 200 mg/dl. In another example, a range of medicament delivery rates can include rates from about 0.01 U/hr to about 40 U/hr. In some embodiments, a range is a single value.

The terms "sensor," "sensing region" as used herein are broad terms, and are to be given their ordinary and customary meaning to a person of ordinary skill in the art (and are not to be limited to a special or customized meaning), and refer without limitation to the component or region of a device by which an analyte can be quantified.

The terms "smoothing" and "filtering" as used herein are broad terms, and are to be given their ordinary and customary meaning to a person of ordinary skill in the art (and are not to be limited to a special or customized meaning), and refer without limitation to modification of a set of data to make it smoother and more continuous or to remove or diminish outlying points, for example, by performing a moving average.

The term "single point glucose monitor" as used herein is a broad term, and is to be given its ordinary and customary meaning to a person of ordinary skill in the art (and is not to be limited to a special or customized meaning), and refers without limitation to a device that can be used to measure a glucose concentration within a host at a single point in time, for example, a finger stick blood glucose meter. It should be understood that single point glucose monitors can measure multiple samples (for example, blood or interstitial fluid); however only one sample is measured at a time and typically requires some user initiation and/or interaction.

The term "target range," as used herein is a broad term, and is to be given its ordinary and customary meaning to a person of ordinary skill in the art (and is not to be limited to a special or customized meaning), and refers without limitation to a range of glucose concentrations within which a host is to try to maintain his blood sugar. In general, a target range is a range of glucose concentrations considered to be euglycemic. Euglycemic glucose concentrations are discussed in detail in the section entitled "Programming and Processing."

The term "therapy instruction," as used herein is a broad term, and is to be given its ordinary and customary meaning to a person of ordinary skill in the art (and is not to be limited to a special or customized meaning), and refers without limitation to an instruction to a medicament delivery device, such as a medicament injection pen or and medicament pump, to deliver a medicament therapy to a host, including but not limited to an amount of medicament to be delivered and/or a time of medicament delivery.

The terms "substantial" and "substantially" as used herein are broad terms, and are to be given their ordinary and customary meaning to a person of ordinary skill in the art (and are not to be limited to a special or customized meaning), and refer without limitation to a sufficient amount that provides a desired function. In some embodiments, the term "substantially" includes an amount greater than 50 percent, an amount greater than 60 percent, an amount greater than 70 percent, an amount greater than 80 percent, and/or an amount greater than 90 percent. In some embodiments, the integrated electronics are configured to display a representation of medicament delivery on the user interface substantially adjacent to substantially time-corresponding sensor data, wherein "substantially adjacent" refers to a location sufficiently near by or close to the relevant data to create an association, for example.

Overview

FIG. **1** is a block diagram of an integrated system **10** of the preferred embodiments, including a continuous glucose sensor **12**, a receiver **14** for processing and displaying sensor data, a medicament delivery device **16**, and optionally a single point glucose-monitoring device **18**. The integrated diabetes management system **10** of the preferred embodiments provides improved convenience and accuracy thus affording a host **8** with improved convenience, functionality, and safety in the care of their disease.

FIG. **1** shows a continuous glucose sensor **12** that measures a concentration of glucose or a substance indicative of the concentration or presence of the glucose. In some embodiments, the glucose sensor **12** is an invasive, minimally invasive, or non-invasive device, for example a subcutaneous, transdermal, or intravascular device, as described elsewhere herein. In some embodiments, the sensor **12** can analyze a plurality of intermittent biological samples. The glucose sensor can use any method of glucose-measurement, including enzymatic, chemical, physical, electrochemical, spectrophotometric, polarimetric, calorimetric, radiometric, or the like. In alternative embodiments, the sensor **12** can be any sensor capable of determining the level of an analyte in the body, for example oxygen, lactase, insulin, hormones, cholesterol, medicaments, viruses, or the like. The glucose sensor **12** uses any known method to provide an output signal indicative of the concentration of the glucose. The output signal is typically a raw data stream that is used to provide a useful value of the measured glucose concentration to a patient or doctor, for example.

A receiver **14** is provided that receives and processes the raw data stream, including calibrating, validating, and displaying meaningful glucose values to a host, such as described in more detail below. Although the receiver is shown as wirelessly communicating with the sensor, the receiver can be physically connected to the sensor and/or sensor electronics and/or housed within the medicament delivery device and/or single point monitor, thereby removing the wireless connection. A medicament delivery device **16** is further provided as a part of the integrated system **10**. In some preferred embodiments, the medicament delivery device **16** is a medicament injection pen or jet-type injector for injecting a medicament (e.g., insulin). In some preferred embodiments, the medicament delivery device **16** is a medicament delivery pump, also referred to as an infusion pump, for medicament infusion (e.g., insulin). In some embodiments, both a hand-held medicament injection pen and an infusion pump are used to deliver one or more types of medicament to the host, as described elsewhere herein in greater detail. In some embodiments, an optional single point glucose monitor **18** is further provided as a part of the integrated system **10**, for example a self-monitoring blood glucose meter (SHBG), non-invasive glucose meter, or the like, integrated into a receiver housing and/or a medicament delivery device housing.

Conventionally, each of these devices separately provides valuable information and/or services to diabetic patients. Thus, a typical diabetic patient has numerous individual devices, which they track and consider separately. In some cases, the amount of information provided by these individual devices may require complex understanding of the nuances and implications of each device, for example types and amounts of medicament (e.g., insulin) to deliver. Typically, each individual device is a silo of information that functions as well as the data provided therein, therefore when the devices are able to communicate with each other, enhanced functionality and safety can be realized. For example, when a continuous glucose monitor functions alone (for example, without data other than that which was gathered by the device), sudden changes in glucose level are tracked, but may not be fully understood, predicted, preempted, or otherwise considered in the processing of the sensor data; however, when the continuous glucose sensor is provided with information about time, amount, and type of medicament injections, calories consumed, time or day, meal time, or like, more meaningful, accurate and useful glucose estimation, prediction, and other such processing can be provided, such as described in more detail herein. By integrating these devices, the information from each component can be leveraged to increase the intelligence, benefit provided, convenience, safety, and functionality of the continuous glucose sensor and the other integrated components. Therefore, it would be advantageous to provide a device that aids the diabetic patient in integrating these individual devices in the treatment of his/her disease.

Sensor

The preferred embodiments relate to the use of an analyte sensor **12** that measures a concentration of analyte of interest or a substance indicative of the concentration or presence of the analyte. In some embodiments, the sensor is a continuous device, for example a subcutaneous, transdermal (e.g., transcutaneous), or intravascular device. The analyte sensor can use any method of analyte-sensing, including enzymatic, chemical, physical, electrochemical, spectrophotometric, polarimetric, calorimetric, radiometric, or the like.

The analyte sensor uses any method, including invasive, minimally invasive, and non-invasive sensing techniques, to provide an output signal indicative of the concentration of the analyte of interest. The output signal, which is associated with the analyte concentration of the host, is typically a raw signal that is used to provide a useful value of the analyte of interest to a user, such as a patient or physician, who can be using the device. Accordingly, appropriate smoothing, calibration, and/or evaluation methods can be applied to the signal and/or system as a whole to provide relevant and acceptable estimated analyte data to the user.

FIG. **2**A illustrates the continuous glucose sensor **12**, in one embodiment, an implantable glucose sensor such as described in U.S. Patent Publication No. 2005-0245799, which is incorporated by reference in its entirety. In this embodiment, a body **13** and a sensing region include the electrodes and a membrane **12***c*. Sensor electronics (not shown) are located within the body **13**. The three electrodes, including but not limited to a working electrode **12***a*, a reference electrode **12***b*, and an auxiliary, counter or second working electrode **12***x*, within the sensing region are operably connected to the sensor electronics and are covered by a sensing membrane **12***c* and an optionally biointerface membrane (not shown), which are described elsewhere herein. The body **13** is preferably formed from epoxy molded around the sensor electronics, however the body can be formed from a variety of materials, including metals, ceramics, plastics, or composites thereof. U.S. Pat. No. 7,134,999, which is incorporated by reference in its entirety, discloses suitable configurations suitable for the body **13**. In one embodiment, the sensing region **12***c* comprises three electrodes including a platinum working electrode **12***a*, a platinum counter electrode **12***x*, and a silver/silver chloride reference electrode **12***b*, for example. However a variety of electrode materials and configurations can be used with the implantable glucose sensor of the preferred embodiments. The top ends of the electrodes are in contact with an electrolyte phase (not shown), which is a free-flowing fluid phase disposed between the sensing membrane and the

electrodes. In one embodiment, a counter electrode **12***x* is provided to balance the current generated by the species being measured at the working electrode. In the case of a glucose oxidase based glucose sensor, the species being measured at the working electrode is H_2O_2. Glucose oxidase catalyzes the conversion of oxygen and glucose to hydrogen peroxide and gluconate according to the following reaction:

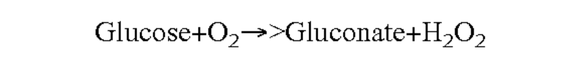

$$\text{Glucose}+O_2 \rightarrow \text{Gluconate}+H_2O_2$$

The change in H_2O_2 can be monitored to determine glucose concentration because for each glucose molecule metabolized, there is a proportional change in the product H_2O_2. Oxidation of H_2O_2 by the working electrode is balanced by reduction of ambient oxygen, enzyme generated H_2O_2, or other reducible species at the counter electrode. The H_2O_2 produced from the glucose oxidase reaction further reacts at the surface of working electrode and produces two protons ($2H^+$), two electrons ($2e^-$) and one oxygen molecule (O_2). In an alternative embodiment, the continuous glucose sensor comprises a continuous glucose sensor such as described with reference to U.S. Pat. No. 6,579,690 to Bonnecaze et al. or U.S. Pat. No. 6,484,046 to Say et al. In another alternative embodiment, the continuous glucose sensor comprises a refillable subcutaneous sensor such as described with reference to U.S. Pat. No. 6,512,939 to Colvin et al. All of the above patents and/or patent applications are incorporated in their entirety herein by reference.

FIG. **2**B illustrates the continuous glucose sensor in another embodiment; the glucose sensor is described in more detail in U.S. Patent Publication No. US-2006-0020187-A1, U.S. Patent Publication No. US-2006-0142651-A1, U.S. Patent Publication No. US-2006-0270923-A1, U.S. Patent Publication No. US-2007-0027370-A1, U.S. Patent Publication No. US-2005-0143635-A1, U.S. Patent Publication No. US-2007-0027385-A1, U.S. Patent Publication No. US-2007-0213611-A1, and U.S. Patent Publication No. US-2008-0083617-A1, which are each incorporated herein by reference in their entirety. FIG. **2**B is a perspective view of an in vivo portion of the continuous glucose sensor **12**, in one embodiment. In this embodiment, the in vivo portion of the sensor includes at least one working electrode **12***a* and a reference electrode **12***b* and a sensing membrane **12***c* (dashed line). In one alternative embodiment, the continuous glucose sensor comprises a glucose sensor such as described in U.S. Pat. No. 6,565,509 to Say et al., U.S. Pat. No. 6,360,888 to McIvor et al. and/or U.S. Pat. No. 6,424,847 to Mastrototaro et al. All of the above patents and/or patent applications are incorporated in their entirety herein by reference.

FIG. **2**C is a cross-section of the sensor shown in FIG. **2**B, taken on line **2**C-**2**C. In preferred embodiments, the membrane **12***c* (e.g., a biointerface and/or sensing membrane) includes at least an enzyme domain **12***f* having an enzyme configured to detect the analyte, such as but not limited to glucose oxidase (e.g., GOX). In some preferred embodiments, the sensing membrane **12***c* can include one or more additional domains, such as but not limited to an electrode domain **12***d*, an interference domain **12***e*, a resistance domain **12***j*, a cell disruptive domain and/or a cell impermeable domain, for example. Additional sensor and membrane configurations can be found in U.S. Patent Publication No. US-2006-0020187-A1, U.S. Patent Publication No. US-2005-0031689-A1, U.S. Patent Publication No. US-2007-0027370-A1, U.S. Patent Publication No. US-2006-0229512-A1, U.S. Patent Publication No. US-2006-0253012-A1, U.S. Patent Publication No. US-2007-0197890-A1, U.S. Patent Publication No. US-2007-0244379, and U.S. Patent Publication No. US-2007-0235331-A1, each of which is incorporated herein by reference in its entirety.

FIG. **2**D illustrates the continuous glucose sensor in another embodiment, a glucose sensor having first and second working electrodes (e.g., dual-electrode), such as described in U.S. Patent Publication No. US-2007-0027385-A1, U.S. Patent Publication No. US-2007-0213611-A1, and U.S. Patent Publication No. US-2008-0083617-A1, U.S. Pat. No. 7,366,556, and co-pending U.S. patent application Ser. No. 12/111,062, filed Apr. 28, 2008 and entitled "Dual Electrode System for a Continuous Analyte Sensor," each of which are incorporated herein by reference in their entireties. In some preferred embodiments, the dual-electrode continuous glucose sensor includes a first working electrode **12**a_1 and a second working electrode **12**a_2, and a reference electrode **12***b*, and a membrane system (not shown), wherein the membrane located over the first working electrode comprises active enzyme and the located over the second working electrode comprises no enzyme or inactive enzyme. Accordingly, a total signal detected by the first working electrode comprises analyte-related (e.g., glucose) and non-analyte-related signal components, while the second working electrode detects a signal comprising only the non-analyte-related signal components. A substantially analyte-only signal can be determined algorithmically, such as, but not limited to, by subtracting the non-analyte-related signal component (detected by the second working electrode) from the total signal (e.g., detected by the first working electrode), thereby providing a substantially "noise-free" analyte signal.

FIG. **2**E illustrates the continuous glucose sensor in yet another embodiment, a continuous glucose sensor configured for implantation into a host's circulatory system, in fluid communication with a host's circulatory system, and/or into an extracorporeal circulatory device. As shown in FIG. **2**E, in some embodiments, the continuous glucose sensor **12** is disposed within a catheter **1201** inserted into a vein **1204** or artery of the host. The catheter **1201** is attached to IV tubing **1203** via a connector **1202**, such as a Leur lock. In the embodiment illustrated in FIG. **2**E, the sensor **12** is exposed to samples of the host's circulatory system (e.g., blood **1205**) by withdrawing a blood sample into the catheter lumen such that the sensing portion of the sensor is exposed to the sample. In some alternative embodiments, the sensor **12** is disposed within the fluid connector or other portion of the IV tubing in fluid communication with the host's circulatory system. In this embodiment, after generation of a signal associated with the concentration of glucose in the blood sample, the sample is expelled from the catheter (e.g., back into the circulatory system) and the sensor is washed and calibrated. Additional embodiments are described in greater detail in co-pending U.S. patent application Ser. No. 11/543,396, filed Oct. 4, 2006 and entitled "Analyte Sensor," co-pending U.S. patent application Ser. No. 12/055,114, filed Mar. 25, 2008 and entitled "Analyte Sensor," and U.S. Patent Publication No. US-2008-0108942-A1. In an alternative embodiment, the continuous glucose sensor comprises an intravascular sensor such as described with reference to U.S. Pat. No. 6,477,395 to Schulman et al. In another alternative embodiment, the continuous glucose sensor comprises an intravascular sensor such as described with reference to U.S. Pat. No. 6,424,847 to Mastrototaro et al. All of the above patents and/or patent applications are incorporated in their entirety herein by reference.

The methods and devices of preferred embodiments can be employed in a continuous glucose sensor that measures a concentration of glucose or a substance indicative of a concentration or a presence of glucose. However, certain methods and devices of preferred embodiments are also suitable for use in connection with non-continuous (e.g., single point measurement or finger stick) monitors, such as the OneTouch® system manufactured by LifeScan, Inc., or monitors as disclosed in U.S. Pat. No. 5,418,142; U.S. Pat. No. 5,515,170; U.S. Pat. No. 5,526,120; U.S. Pat. No. 5,922,530; U.S. Pat. No. 5,968,836; and U.S. Pat. No. 6,335,203. In some embodiments, the device can analyze a plurality of intermittent biological samples, such as blood, interstitial fluid, or the like. The glucose sensor can use any method of glucose-measurement, including colorimetric, enzymatic, chemical, physical, electrochemical, spectrophotometric, polarimetric, calorimetric, radiometric, or the like. In alternative embodiments, the sensor can be any sensor capable of determining the level of an analyte in the body, for example oxygen, lactase, hormones, cholesterol, medicaments, viruses, or the like.

Although a few exemplary embodiments of continuous glucose sensors are illustrated and described herein, it should be understood that the disclosed embodiments are applicable to any device capable of single analyte, substantially continual or continuous measurement of a concentration of analyte of interest and providing an output signal that represents the concentration of that analyte.

Medicament Delivery Device

Some preferred embodiments provide an integrated system **10**, which includes a medicament delivery device **16** for administering a medicament to a host **8**. An integrated medicament delivery device can be designed for bolus injection, continuous injection, inhalation, transdermal absorption, other method for administering medicament, or any combinations thereof. The term medicament includes any substance used in therapy for a host **8** using the system **10**, for example, insulin, pramlintide, exenatide, amylin, glucagon, derivatives thereof, and the like. PCT International Publication No. WO02/43566 describes glucose, glucagon, and vitamins A, C, or D that can be used with the preferred embodiments. U.S. Pat. No. 6,051,551 and U.S. Pat. No. 6,024,090 describe types of insulin suitable for inhalation that can be used with the preferred embodiments. U.S. Pat. No. 5,234,906, U.S. Pat. No. 6,319,893, and European Pat. No. 760677 describe various derivatives of glucagon that can be used with the preferred embodiments. U.S. Pat. No. 6,653,332 describes a combination therapy that can be used with the preferred embodiments. U.S. Pat. No. 6,471,689 and PCT International Publication No. WO81/01794 describe insulins useful for delivery pumps that can be used with the preferred embodiments. U.S. Pat. No. 5,226,895 describes a method of providing more than one type of insulin that can be used with the preferred embodiments. All of the above patents and publications are incorporated herein by reference in their entirety and can be useful as the medicament(s) in the preferred embodiments.

In some embodiments, the medicament delivery device is configured for injection and/or infusion of the medicament. For example, in some embodiments, a medicament delivery device is an infusion pump, such as but not limited to a bedside or a portable infusion pump. In one embodiment, the infusion is a portable medicament pump, as described elsewhere herein. In one preferred embodiment, the medicament delivery device **16** is a medicament pump designed for basal and/or bolus infusion of medicament. The medicament pump of the preferred embodiments includes any portable or bedside (e.g., non-portable) infusion devices, such as is appreciated by one skilled in the art. A few examples of medicament infusion devices (e.g., pumps) that can be used with the preferred embodiments include U.S. Pat. No. 5,389,078, U.S. Pat. No. 6,471,689, U.S. Pat. No. 6,656,148, U.S. Pat. No. 6,749,587, U.S. Pat. No. 6,999,854, U.S. Pat. No. 7,060,059, U.S. Pat. No. 7,109,878, U.S. Pat. No. 7,267,665, U.S. Pat. No. 7,291,133, U.S. Pat. No. 7,311,691, U.S. Pat. No. 7,374,556 U.S. Pat. No. 7,303,549, PCT International Publication No. WO 81/01794, European Patent No. 1281351 and co-pending U.S. patent application Ser. No. 12/055,114, filed Mar. 25, 3008 and entitled "Analyte Sensor," all of which are incorporated herein by reference in their entirety.

In some embodiments, a medicament delivery device **16** is a hand-held medicament injection pen, such as but not limited to a syringe, medicament injection pen or a pneumatic injection device. In some embodiments, the hand-held medicament injection pen is configured for single-use (e.g., disposed of after use). In other embodiments, the hand-held medicament injection pen is a multi-use injection device having single-use, disposable parts. For example, a medicament injection pen can be configured to use single-use, disposable needles that are thrown away after one use. In one exemplary embodiment, the medicament injection pen is configured for use with a cartridge of a plurality of single-use, disposable needles, such that each used needle can be changed and/or removed, such as but not limited to by ejecting a used needle and installing an unused (e.g., sterile) needle. In still other embodiments, the hand-held medicament injection pen is a multi-use device configured to sequentially deliver (e.g., aseptically) medicament doses to each of a plurality of hosts. For example, in one embodiment, the hand-held medicament injection pen is a pneumatic injection device.

In one preferred embodiment, the integrated medicament delivery device **16** is a hand-held medicament injection pen (e.g., insulin pen) designed for bolus injection. The hand-held medicament injection pen of the preferred embodiments includes any pen-type injector, such as is appreciated by one skilled in the art. A few examples of a hand-held medicament injection pens that can be used with the preferred embodiments include U.S. Pat. No. 4,865,591, U.S. Pat. No. 5,104,380, U.S. Pat. No. 5,226,895, U.S. Pat. No. 5,308,340, U.S. Pat. No. 5,383,865, U.S. Pat. No. 5,536,249, U.S. Pat. No. 6,192,891, U.S. Pat. No. 7,169,132, U.S. Pat. No. 7,195,616, U.S. Pat. No. 7,291,132, U.S. Patent Publication No. US-2001-0051792-A1, U.S. Patent Publication No. US-2007-0061674-A1 and U.S. Patent Publication No. US-2008-0015511-A1, each of which is incorporated herein by reference in their entirety.

In some embodiments, a medicament delivery device (e.g., hand-held medicament injection pen) is provided, which includes a processor and a wired or wireless connection to a receiver, which are described in more detail elsewhere herein. In some embodiments, the device includes programming that receives instructions from the receiver **14** regarding type and amount of medicament to administer. In some embodiments, wherein the medicament delivery device is an injection device (e.g., a pen) that includes more than one type of medicament, the receiver provides the necessary instructions to determine which type or types of medicament to administer, and can provide instructions necessary for mixing the one or more medicaments. In some embodiments, the receiver provides the glucose trend information (for example, concentration, rate-of-change, acceleration, or other user input information) and the injection

device includes programming necessary to determine appropriate medicament delivery. In some embodiments, the receiver, user interface, and/or integrated electronics are incorporated into and/or integral with the pen. However, any of the electronics (including hardware, firmware and/or software/programming) associated with the receiver, medicament delivery device and/or optional single point monitor can be located in any one or a combination of the receiver, medicament delivery device and/or optional single point monitor.

In some embodiments, the receiver and/or hand-held medicament injection pen is configured to calculate medicament usage and/or a remaining on-board medicament amount. In some embodiments, the integrated electronics (e.g., in the receiver and/or medicament delivery device) are configured to receive sensor data and calculate an amount of time remaining with the current medicament on-board the delivery device (e.g., the amount of medicament within the medicament device's reservoir/cartridge) based on historic, current, estimated, and/or predicted glucose data. In some embodiments, integrated electronics include electronics associated with a receiver and a pen, which can be configured for two-way communication there between, such as described in more detail elsewhere herein.

In some embodiments, the pen includes programming to send information regarding the amount, type, and time of medicament delivery administered to the receiver **14** for processing. The receiver **14** can use this information received from the pen, in combination with the continuous glucose data obtained from the sensor, to monitor and determine the host's glucose patterns, such as to measure his response to each medicament delivery. Knowing the host's individual response to each type and amount of medicament delivery can be useful in adjusting or optimizing the host's therapy. It is noted that individual metabolic profiles (for example, medicament sensitivity) are variable from host to host and time to time. While not wishing to be bound by theory, it is believed that once the receiver has learned (or as the receiver continuously learns) the individual's metabolic patterns, including glucose trends and associated medicament deliveries, the receiver can be programmed to adjust and optimize the therapy recommendations for the host's individual physiology to maintain their glucose levels within a desired target range. In some embodiments, the receiver (including user interface and integrated electronics) is integral with and/or incorporated into the pen.

In some embodiments, the receiver includes algorithms that use parameters provided by the continuous glucose sensor, such as glucose concentration, rate-of-change of the glucose concentration, and acceleration of the glucose concentration to more particularly determine the type, amount, and time of medicament administration, can be applied to the integrated system **10**, such as described herein. However, the integrated system additionally provides convenience by automation (for example, data transfer through operable connection) and reduced opportunity for human error than may be experienced with the conventional therapy.

In some embodiments, integrated electronics, which are described in more detail elsewhere herein, include programming that requires at least one of the receiver **14**, the single point glucose monitor **18**, and the hand-held medicament injection pen **16** to be validated or confirmed by another of the components to provide a fail safe accuracy check; in these embodiments, the validation includes algorithms programmed into any one or more of the components. In some embodiments, the integrated electronics include programming that requires at least one of the receiver **14** and the hand-held medicament injection pen **16** (e.g., hand-held medicament injection pen such as a pen) to be validated or confirmed by a human (for example, to confirm the amount and/or type of medicament). In these embodiments, validation provides a means by which the receiver can be used adjunctively, when the host or doctor would like to have more control over the host's therapy decisions, for example. See FIGS. **15** and **16** for exemplary processes that can be implemented herein.

In some embodiments, the hand-held medicament injection pen **16** includes a motor configured for electronic control of at least a portion of the hand-held medicament injection pen. In some embodiments, a motor is configured to automatically set an amount of medicament to be delivered to the host, such as but not limited to a medicament bolus amount, for example, using a step motor. In some embodiments, a motor is configured to control a rate of medicament injection into the host. In some embodiments, the integrated electronics (e.g., the receiver), described in more detail elsewhere herein, are configured to remotely control at least one motor, such as those described above. In some embodiments, the integrated electronics are configured to provide a recommended therapy amount (e.g., medicament bolus amount), which can be communicated to the hand-held medicament injection pen (or which can be integral with the pen); in some such embodiments, the integrated electronics and/or hand-held medicament injection pen electronics are configured to automatically set the bolus amount using the motor (e.g., a step motor), however, in some embodiments, a validation step can be required. In some embodiments, the integrated electronics and/or the hand-held medicament injection pen electronics are configured to automatically inject the medicament at a controlled speed and/or rate. Preferably, the system is configured to inject the medicament at an optimum rate to reduce tissue damage and optimize the medicament absorption, which are believed to enable the effectiveness of the medicament to be more consistent over time. In some embodiments, actuation (or control) of setting a bolus amount(s) and/or injection of the medicament is controlled by a receiver operably connected to the hand-held medicament injection pen, for example by actuation (or selection) of a button, a user selectable menu item, or on a touch screen. In alternative embodiments, actuation (or control) of setting a bolus amount(s) and/or injection of the medicament is controlled by the hand-held medicament injection pen, for example by actuation (or selection) of a button, a user selectable menu item, or on a touch screen.

Although much of this description and the exemplary embodiments are drawn to an integrated hand-held medicament injection pen, the integration concepts described herein are applicable to a variety of other medicament devices, including inhalation devices, transdermal patches, and the like.

Receiver

The preferred embodiments provide an integrated system **10**, which includes a receiver **14** that receives and processes the raw data stream from the continuous glucose sensor **12**. The receiver can perform all or some of the following operations: a calibration, converting sensor data, updating the calibration, evaluating received reference and sensor data, evaluating the calibration for the analyte sensor, validating received reference and sensor data, displaying a meaningful glucose value to a user, calculating therapy recommendations, validating recommended therapy, adaptive programming for learning individual metabolic patterns, and prediction of glucose values, for example. Some

complementary systems and methods associated with the receiver are described in more detail with reference to co-pending U.S. Patent Publication No. US-2005-0027463-A1, which is incorporated herein by reference in its entirety.

In some embodiments, the receiver **14** is a PDA- or pager-sized housing, for example, and comprises a user interface **96** that has a plurality of buttons **108** and a liquid crystal display (LCD) screen, which can include a backlight. In some embodiments, the receiver can take other forms, for example a hand-held medicament injection pen case, a hand-held medicament injection pen kit, a hand-held medicament injection pen housing, a medicament delivery device housing and/or receiver, a computer, a server, a cell phone, a personal digital assistant (PDA), or other such device capable of receiving and processing the data such as described herein. Additionally or alternatively, the user interface can include a keyboard, a speaker, a scroll wheel, and/or a vibrator such as described with reference to FIG. **13**. The receiver **14** comprises systems (for example, electronics) necessary to receive, process, and display sensor data from the glucose sensor **12**, such as described in more detail with reference to FIG. **13**. The receiver **14** processes data from the continuous glucose sensor **12** and additionally processes data associated with at least one of the hand-held medicament injection pen **16**, a single point glucose meter **16**, and a host **8** (user).

In some embodiments, the receiver is integral with (physically connected to) the sensor. In some embodiments, the receiver **14** is integrally formed with a medicament delivery device **16** and/or a single point glucose monitor **18**. In some embodiments, the receiver **14**, the medicament delivery device **16** and/or a single point glucose monitor **18** are detachably connected, so that one or more of the components can be individually detached and attached at the user's convenience. In some embodiments, the receiver **14**, the medicament delivery device **16**, and/or a single point glucose monitor **18** are separate from, detachably connectable to, or integral with each other; and one or more of the components are operably connected through a wired or wireless connection, allowing data transfer and thus integration between the components. In some embodiments, the receiver **14** and the medicament delivery device **16** (e.g., a hand-held medicament injection pen) each comprise mutually engaging electrical contacts, which are configured to allow communication between the hand-held medicament injection pen and the receiver. In a further embodiment, the integrated system is configured to initiate communication between the receiver and the hand-held medicament injection pen, in response to engagement of the electrical contacts. Upon engagement of the electrical contacts, the system is configured to communicate medicament delivery data between the receiver and the hand-held medicament injection pen.

In some embodiments, the receiver **14** includes a housing and a user interface **196** located on the receiver housing. In some embodiments, a hand-held medicament injection pen is provided and includes a housing, wherein the user interface **196** is located on the hand-held medicament injection pen housing. In some embodiments, a housing is provided, wherein the housing is configured to receive a hand-held medicament injection pen and wherein the housing includes a user interface **196**. In some embodiments, a hand-held medicament injection pen kit is provided, wherein the hand-held medicament injection pen kit is configured to receive the hand-held medicament injection pen (and can be configured to receive other accessories, such as medicament cartridges, needles, and the like), wherein the user interface **196** is located on the hand-held medicament injection pen kit. In some embodiments, a receiver, integrated electronics, and a hand-held medicament injection pen are integrally formed into one housing.

In some alternative embodiments, a flexible LED screen is provided as a user interface (or a component thereof), wherein the flexible LED screen is physically located on at least one of the receiver and the hand-held medicament injection pen and/or operably connected to at least one of the receiver and the hand-held medicament injection pen, and wherein the integrated electronics are configured to display sensor data on the flexible LED screen.

In some alternative embodiments, an image projection system is provided, wherein the integrated electronics are configured to project data onto a surface (e.g., wall, skin, and the like) as a user interface (or a component thereof). For example, the image projection system can be provided on the receiver, hand-held medicament injection pen, and/or any housing associated therewith, wherein the image projection system is configured to project an image such as alphanumeric data, icons, pictures, and the like, similar to that conventionally seen on an LCD screen, for example. In use, the image can be projected automatically or in response to actuation by a user, wherein the image includes data such as glucose concentration and/or glucose trend, therapy recommendations, event markers, and the like.

Single Point Glucose Monitor

In some embodiments, the integrated system is configured and arrange for operable communication with a single point glucose monitor **18**, such as but not limited to a meter for measuring glucose within a biological sample, including a sensing region that has a sensing membrane impregnated with an enzyme, similar to the sensing membrane described with reference to U.S. Pat. No. 4,994,167 and U.S. Pat. No. 4,757,022, which are incorporated herein in their entirety by reference. In some embodiments, the single point glucose monitor includes a conventional finger stick device. However, in alternative embodiments, the single point glucose monitor can use other measurement techniques including enzymatic, chemical, physical, electrochemical, spectrophotometric, polarimetric, calorimetric, radiometric, and the like. In some embodiments, the single point glucose monitor is configured for wired or wireless communication with a component of the integrated system (e.g., automatic and/or semi-automatic communication), such as but not limited to the receiver. However, in other embodiments, the single point glucose monitor is not configured for operable communication with the integrated system, such that the host must manually input the single point glucose monitor data (e.g., into the receiver). It is noted that the meter is optional in that a separate meter can be used and the glucose data downloaded or input by a user into the receiver.

Integrated System Design

In preferred embodiments, an integrated system **10** includes a receiver **14** (e.g., including user interface and integrated electronics), a medicament delivery device **16**, and optionally a single point glucose meter **18**, wherein the integrated electronics are configured to process and display continuous glucose data from a continuous glucose sensor **12**, including trend graphs, glucose concentration, rate of change information (e.g., directional arrow(s)), high and low glucose alarms, and/or the like, on the user interface. In some embodiments, the integrated electronics are configured to process and display information from the medicament delivery device (e.g., hand-held medicament injection pen). The user interface and integrated electronics can be included in and/or on the hand-held medicament injection pen, a

hand-held medicament injection pen kit, the receiver, housings associated therewith, and/or combinations thereof.

In some embodiments, an integrated hand-held medicament injection pen kit is provided, including for example, a case configured to hold a hand-held medicament injection pen, one or more medicament cartridges, one or more needles, etc., as is appreciated by one skilled in the art. In some embodiments, the integrated hand-held medicament injection pen kit additionally includes a user interface (e.g., an LCD screen), for example on an outside (or an inside) of the case, configured to display continuous glucose data such as described elsewhere herein. In these embodiments, the kit includes electronics, operatively connected to the user interface, including programming configured to perform all or some of the following operations: calibrating and displaying the continuous glucose sensor data, calculating therapy recommendations (e.g., using a bolus-type calculator), validating (e.g., by a user) recommended therapy, and adaptive algorithms configured for learning individual metabolic patterns (e.g., response to therapies administered by the pen), for example.

FIG. **3** is a perspective view of an integrated system **20** in one embodiment, showing an LCD screen **106** on a hand-held medicament injection pen housing **22**. In this exemplary embodiment, the hand-held medicament injection pen **20** includes a hand-held medicament injection pen housing **22**, a receiver, integrated electronics, and an LCD screen **106**, all of which are integrally formed therewith and/or incorporated therein. The hand-held medicament injection pen housing **22** further includes a port **24** configured to receive medicament cartridges and/or needles, and which an end cap can cover. The LCD screen **106** is configured to display data from the continuous glucose sensor and/or the hand-held medicament injection pen, as described in more detail elsewhere herein. An ergonomic handhold includes indentations **26** configured to allow a user's fingers to rest or hold during actuation of the hand-held medicament injection pen via insertion button **28**, for example. While not shown, in some embodiments, sensor and/or medicament delivery electronics can be located partially or wholly with the receiver, with the sensor and/or with the medicament delivery device(s). In some embodiments, the electronics are distributed between the receiver, the sensor and/or the medicament delivery device(s).

In one exemplary embodiment the integrated system **10** is configured and arranged for monitoring and treating diabetes, and includes a medicament delivery device **16** configured and arranged for injecting an amount of medicament into a host **8** and an integrated receiver **14** configured and arranged to receive sensor data from a continuous glucose sensor **12**, wherein the sensor data is indicative of a glucose concentration of the host in vivo, wherein the integrated receiver comprises electronics configured and arranged to process the sensor data. In some embodiments, the electronics are further configured to calculate an amount of medicament therapy (e.g., a deliverable medicament dose, such as but not limited to a bolus dose to be delivered to the host) and/or a time of medicament therapy delivery. As is appreciated by one skilled in the art, the integrated electronics can be located entirely within the receiver **14**, or one or more portions of the electronics can be located with the continuous glucose sensor **12** and/or the medicament delivery device **16** or combinations thereof. Similarly, in some embodiments, the receiver **14** (including integrated electronics) is a separate unit from the sensor **12** and/or hand-held medicament injection pen **16**, while in other embodiments, the receiver (in part or in whole) can be integrated with sensor and/or hand-held medicament injection pen, as is described in greater detail herein. For example, in some embodiments, the integrated receiver includes a housing and the hand-held medicament injection pen is integrally formed with the housing.

In another exemplary embodiment, an integrated system **10** for monitoring and treating diabetes is provided, the system comprising a receiver **14** configured and arranged to receive sensor data from an operably connected continuous glucose sensor **12**, wherein the continuous glucose sensor is configured and arranged to generate sensor data associated with a glucose concentration of a host; integrated electronics configured to process the sensor data and to generate a medicament therapy (e.g., insulin therapy, pramlintide therapy, exenatide therapy, combinations thereof), and an integrated hand-held medicament injection pen **16** for injecting an amount of the corresponding medicament into the host based at least in part on the medicament therapy. The medicament therapy includes but is not limited to a medicament identity, an amount of medicament therapy and/or a time of medicament therapy delivery. In some further embodiments, the receiver and the hand-held medicament injection pen are integrally formed. However, in some other further embodiments, the receiver and hand-held medicament injection pen are detachably connectable, as described elsewhere herein.

In a further embodiment of a detachably connectable hand-held medicament injection pen **16** (e.g., an insulin, pramlintide or exenatide pen) and receiver **14** housing, the system **10** is configured to initiate communication between the hand-held medicament injection pen and the receiver in response to (detachable) connection of the hand-held medicament injection pen and the housing. For example, in some embodiments, the hand-held medicament injection pen and the housing can include mutually engaging contacts (e.g., electrical contacts) that mate (e.g., make an electrical connection) when the hand-held medicament injection pen is connected to the housing and initiate communication between the receiver and the hand-held medicament injection pen. Upon initiation of communication, the receiver and the hand-held medicament injection pen can transmit data. For example, an amount of medicament therapy (e.g., calculated by the integrated electronics), such as but not limited to a bolus medicament dose (e.g., an amount and type of medicament to be delivered), and a time of medicament therapy can be communicated to the hand-held medicament injection pen, such that the medicament therapy can be delivered to (e.g., injected into) the host. Similarly, the hand-held medicament injection pen can communicate information to the receiver, such as but not limited the amount of medicament delivered to the host, the time the medicament was delivered, the amount of medicament remaining in the hand-held medicament injection pen to be used, the type of medicament contained in the hand-held medicament injection pen, and the like. In some embodiments, wireless communication between the hand-held medicament injection pen and the receiver can be initiated by engagement of the contacts or by host actuation of a switch, button, or the like. In some embodiments, communication between the hand-held medicament injection pen and the receiver is initiated after connection by actuation of a switch, button or the like, such as by the host or by attachment of the two devices. For example, in one embodiment, when the hand-held medicament injection pen is inserted into the receiver housing, an external surface of the hand-held medicament injection pen comes into an adjacent parallel orientation with respect to an internal surface of the

receiver housing, which results in depression of a communication actuation button on the interior of the receiver housing. One skilled in the art can appreciate alternative configurations.

In a further embodiment, the integrated system includes a user interface **196**, which is configured an arranged for input of host information and/or output of sensor data and/or medicament delivery data, such as, for example, the LCD screens **106** illustrated in FIGS. **3-12**. For example, the user interface can include a keyboard **198**, buttons **108** and/or a touch screen for input of host information, selection from menus, and the like. The host information includes any information related to the host and his/her medicament therapy, such as but not limited to a host identification (e.g., host ID code/number), physical characteristics of the host, a type of medicament to be injected into the host, a target blood glucose range/level, a protocol for the medicament therapy assigned to the host, an alert, an alarm, and the like. For example, in an embodiment useful in a clinical setting, a caretaker (e.g., nurse, doctor, physician's assistant) can enter a host's ID number and glucose concentration via the user interface, which enables the integrated electronics to calculate a deliverable medicament dose (e.g., according to the medicament therapy protocol assigned to that host ID number), which in turn enables the nurse to deliver an appropriate bolus medicament dose to the host at the bedside. In some embodiments, when the nurse is within a communication distance of the host and his/her implanted continuous glucose sensor, the receiver is configured to interrogate the sensor for the host information and/or sensor data associated with the host's glucose concentration.

In preferred embodiments, the integrated system is configured and arranged to require validation prior to injection an amount of medicament into the host. For example, in some embodiments, the integrated system can prompt the user (e.g., a caretaker, such as a nurse or doctor, or the host himself) to validate (e.g., verify) via the user interface (e.g., via the speaker **100**, vibrator **102** or screen) the host ID, the host's assigned medicament therapy protocol and/or they type of medicament on board the hand-held medicament injection pen. Additionally, the integrated system can display information to the nurse, such as the host ID, sensor data received from the continuous glucose sensor, processed sensor data, medicament delivery data (e.g., data related to a medicament therapy to be delivered to the host), and the like.

FIG. **4** is a perspective view of an integrated system **32** in another embodiment, showing an LCD screen **106** on a hand-held medicament injection pen housing **36**. In this exemplary embodiment, the hand-held medicament injection pen housing **36** includes a hand-held medicament injection pen, a receiver, integrated electronics, and an LCD screen, all of which are integrally formed therewith and/or incorporated therein. The hand-held medicament injection pen housing **36** further includes a port **38** configured to received medicament cartridges and/or needles, and which an end cap can cover. The LCD screen **106** is configured to display data from the continuous glucose sensor and/or the hand-held medicament injection pen, as described in more detail elsewhere herein. An ergonomic handhold includes a thumb hold **40** configured to allow a user's thumb to rest or hold during actuation of the hand-held medicament injection pen via insertion button **42**, for example. Additionally, a scroll wheel **44** (also referred to as a jog wheel, thumb wheel, jog encoder, or rotary encoder) is provided that allows for scrolling through menus, data (e.g., numbers), and/or options, for example, and selection of the menus, data and/or options. In one such embodiment, the scroll wheel enables the user to view a variety of menu driven screens or options for initiating a sensor, displaying glucose data, displaying therapy recommendations, modifying therapy recommendations, and the like, by scrolling up or down on the wheel; additionally, the scroll wheel enables the user to select from the screens or options by depressing the scroll wheel. It is believed that incorporation of a scroll wheel into the integrated system enables a more compact system design with good ergonomics, usability, and reliability. In some embodiments, one or more buttons and/or toggles are included (alternatively or in addition to a scroll wheel) for moving through menus, data, options and the like.

FIG. **5** is a perspective view of an integrated system **46** in another embodiment, showing a housing **48** configured to receive a hand-held medicament injection pen **50** wherein the housing includes an LCD screen **106** thereon. In this exemplary embodiment, the housing **48** includes a receiver, integrated electronics, and an LCD screen **106** integrally formed therewith and/or incorporated therein. Additionally, the housing includes an opening **54** configured to receive the hand-held medicament injection pen **50**. The illustrated hand-held medicament injection pen shows a dial **56** for setting the medicament bolus amount, a screen **58** for viewing the medicament bolus amount (e.g., from about 0 to about 70 units of medicament in some embodiments) while turning the dial **56**, a medicament cartridge holder/receptacle **60** and a needle **62**; however, any known hand-held medicament injection pen configured can be used, as is appreciated by one skilled in the art, and as described in more detail elsewhere herein. In some embodiments, the integrated system includes a receptacle configured and arranged to receive and medicament cartridge, thereby medicament can be delivered to the host. In some embodiments, wherein the pen and the housing are separate, the receptacle **60** is included in the hand-held medicament injection pen, as illustrated in FIG. **5**. However, in embodiments wherein the pen and the housing are integrally formed, the receptacle can be integrally formed with the housing. The integrated system is configured such that the hand-held medicament injection pen is at least partially received, and can be substantially fully received by the housing **48**. In some embodiments, an end cap **64** is provided to protect the end of the hand-held medicament injection pen and/or for with a storage compartment for storing hand-held medicament injection pen accessories (e.g., needles, medicament cartridges, and the like). The illustrated housing **48** includes an LCD screen **106** and a scroll wheel **44**, which are described in more detail elsewhere herein.

In some embodiments, such as the embodiment illustrated in FIG. **5**, the hand-held medicament injection pen is detachably connectable to the receiver. In some embodiments, wherein integrated system **46** includes a housing configured to receive the hand-held medicament injection pen, mutually engaging contacts are provided on the hand-held medicament injection pen and on the housing (e.g., receiver, case, etc), such that when the pen is received by (detachably connected to) the housing (e.g., in a predetermined position), direct communication between the pen and the housing (e.g., receiver and/or integrated electronics housed therein) can occur. In some embodiments, the integrated system is configured to detect when the pen is received by the housing and subsequently upload and/or download information there between. In some embodiments, the integrated system is configured to initiate communication between the hand-held medicament injection pen and the housing (e.g., receiver and/or integrated electronics) in response to mutual engage-

ment of the electrical contacts. In some embodiments, the integrated system is configured communicate data (e.g., recommended medicament bolus amount, actual amount of medicament delivered, and time of medicament delivery, glucose data, and the like) between the hand-held medicament injection pen and the housing (e.g., receiver and/or integrated electronics) in response to engagement of the electrical contacts.

FIG. **6** is a perspective view of an integrated system **46** in yet another embodiment, wherein the integrated receiver **14** includes a housing **48** configured to receive a hand-held medicament injection pen **50** wherein the housing includes an LCD screen **106** thereon. In this exemplary embodiment, the housing **48** includes a receiver, integrated electronics, and an LCD screen **106** integrally formed therewith and/or incorporated therein. The illustrated hand-held medicament injection pen **50** shows a screen **58** for viewing the medicament bolus amount, which can be selected using actuation button **44** located on the housing. Actuation button **44** can also be used to toggle/scroll through menus on LCD screen **106**. In some embodiments, the hand-held medicament injection pen includes contacts that mate with contacts of the housing, such that the integrated electronics can automatically set a bolus dose, such as a calculated medicament therapy, that can then be manually delivered by the host. Accordingly, in some embodiments, the hand-held medicament injection pen **16** is detachably connectable to the housing. For example, the hand-held medicament injection pen can be connected to the housing and then removed/separated from the housing. For example, in some embodiments, the hand-held medicament injection pen is disposable and a first hand-held medicament injection pen is removed and thrown away, followed by connection of a second (e.g., new, unused) hand-held medicament injection pen. In another example, the hand-held medicament injection pen is not disposable, but uses disposable cartridges of medicament received in a receptacle. Accordingly, in this example, the hand-held medicament injection pen can be disconnected from the housing, for medicament cartridge replacement, followed by reconnection of the pen to the housing.

FIG. **7** is a perspective view of an integrated system **46***a* in yet another embodiment, in which the integrated receiver **14** includes a housing **48***a*, such as but not limited to a hand-held medicament injection pen kit, configured to receive a hand-held medicament injection pen **50**, wherein the receiver housing includes an LCD screen **106** and an actuation button **44** thereon. In this exemplary embodiment, the system is configured and arranged as a hand-held medicament injection pen kit having a two-part housing configured to open in a clam-shell manner, with a hinge at one edge. While the device illustrated in FIG. **7** includes top and bottom portions connected by a hinge structure, the device can include more than two portions or the portions can be in different orientations from that depicted in FIG. **7**. For example, in some embodiments, the housing has three hingeably-connected portions (e.g., top, middle and bottom). In other embodiments, the portions could open from side to side or from front to back, or any combination thereof. In still other embodiments, a portion of the housing is removably connected (e.g., a battery compartment cover) or is configured to slide/pop out of the housing, such as a drawer.

In the illustrated embodiment (FIG. **7**), the receiver housing is configured with a top portion including a user interface **196** (e.g., the LCD screen **106** (e.g., for display of sensor data and/or the medicament therapy) and an actuation button **44**) located thereon, and a bottom portion configured with compartments **50***a* and **60***a* configured to hold (e.g., store) the hand-held medicament injection pen **50** as well as one or more accessories (e.g., medicament cartridges, needles, alcohol wipes, etc.). In some embodiments, display a representation of medicament delivery on the user interface, wherein the representation of medicament delivery is substantially adjacent to substantially time-corresponding sensor data, such at that described elsewhere with reference to FIG. **14**. In some embodiments, the user interface includes a flexible LED screen operably connected to at least one of the receiver and the hand-held medicament injection pen, such as, for example, a fold-out or unrolling flexible screen that can be folded up and/or rolled up for storage when not in use. Accordingly, the integrated electronics are configured to display continuous glucose sensor data on the flexible LED screen. In other embodiments, the user interface includes an image projection system configured to project continuous glucose sensor data onto a surface, such as but not limited to a wall, a table top, a book, and the like.

In some embodiments, such as the illustrated embodiment FIG. **7**, the hand-held medicament injection pen is detachably connectable to the receiver housing. For example, the hand-held medicament injection pen and the recess for receiving the hand-held medicament injection pen can include mutually engaging electrical contacts that engage when the hand-held medicament injection pen is put away in the housing. Similarly to the hand-held medicament injection pen, in some embodiments, the receiver is connected to the housing (either detachably or non-detachably). However, in preferred embodiments, the receiver (e.g., including integrated electronics) is integrally formed with the housing. In some embodiments, the system is configured to initiate communication between the hand-held medicament injection pen and the receiver in response to engagement of the mutually engaging electrical contacts (e.g., when the pen is put away in the housing), such that data/information (e.g., the medicament therapy) can be communicated between the receiver and hand-held medicament injection pen. The housing includes the receiver and integrated electronics, as well as a connector **48***b*, for connection of a power cable (e.g., to re-charge an included battery) and/or a data cable (e.g., for connection to a single-point glucose monitor for calibration and/or for connection to a computer, such as for data transfer and/or battery charging). In some embodiments, the hand-held medicament injection pen (e.g., motorized) and the interior of the housing comprise mutually engaging contacts, whereby, when the pen is installed in the housing and the pen and housing contacts are engaged, the integrated electronics can set a bolus dose (on the pen) to be delivered to the host.

FIG. **8** is a perspective view of an integrated system **66** in another embodiment, showing a hand-held medicament injection pen housing **68**, a receiver, integrated electronics, a user interface and a hand-held medicament injection pen integrally formed and/or incorporated therein. The hand-held medicament injection pen housing **68** further includes a port **70** configured to received medicament cartridges and/or needles, and which an end cap can cover. The LCD screen **106** is configured to display data from the continuous glucose sensor and/or the hand-held medicament injection pen, as described in more detail elsewhere herein. An ergonomic handhold includes an indentation **72** configured to allow a user's index finger to rest or hold during actuation of the hand-held medicament injection pen via an insertion button **74**, for example.

FIG. **9** is a perspective view of an integrated system **76** in another embodiment, showing a receiver housing **78** including a receiver, integrated electronics, a user interface and a hand-held medicament injection pen integrally formed

therewith and/or incorporated therein. An actuation button **80** (e.g., for actuation of the hand-held medicament injection pen) is incorporated into the integrated receiver housing; the receiver housing further includes a port on an opposing side (e.g., to the actuation button, not shown in FIG. **9**) configured to receive medicament cartridges and/or needles, and which an end cap can cover. In some embodiments, the hand-held medicament injection pen is integrally formed with and/or incorporated into the receiver housing; however, alternative embodiments include an opening in the receiver housing configured to receive a hand-held medicament injection pen similar to that illustrated in FIG. **5** (e.g., such that is detachably connectable thereto). The LCD screen **106** is configured to display data from the continuous glucose sensor and/or the hand-held medicament injection pen, as described in more detail elsewhere herein. The illustrated housing further includes a scroll wheel **44**, which is described in more detail elsewhere herein. It is believed that the illustrated configuration of FIG. **9** enables a low profile device, wherein a user can wear or carry the integrated system discretely.

FIG. **10** is a perspective view of an integrated system **82** in another embodiment, showing a receiver housing **84** including a receiver, integrated electronics, a user interface, and a hand-held medicament injection pen integrally formed therewith and/or incorporated therein. The illustrated embodiment of FIG. **10** is substantially similar to FIG. **9**; however the integrated hand-held medicament injection pen is rotated 90 degrees within the design of the housing.

FIG. **11** is a perspective view of an integrated system **80** showing an integrated housing **88** including a receiver, integrated electronics, a user interface, and a hand-held medicament injection pen, wherein the housing further includes a cap for the hand-held medicament injection pen. This illustrated embodiment is similar to that of FIGS. **6** and **7**, however further includes a cap **90** configured to protect the end of the hand-held medicament injection pen and/or for with a storage compartment for storing hand-held medicament injection pen accessories (e.g., needles, medicament cartridges, and the like).

FIG. **12** is a perspective view of an integrated system **92** showing an integrated housing **94** including a receiver, integrated electronics, a user interface, and a hand-held medicament injection pen, wherein the housing further includes a cap for the hand-held medicament injection pen. This illustrated embodiment is similar to that of FIG. **11**, however includes a hinged end cap **96** and can enable a design with a reduced volume/size to encourage patient acceptance and/or use.

Integrated Electronics

FIG. **13** is a block diagram that illustrates integrated system electronics in one embodiment. One embodiment is described wherein the processor within the receiver performs much of the processing, however it is understood that all or some of the programming and processing described herein can be accomplished within the continuous glucose sensor, the receiver, a single point glucose monitor, and/or the delivery device, or any combination thereof. Similarly, displays, alarms and other user interface functions can be incorporated into any of the individual components of the integrated delivery device.

In some embodiments, the receiver includes a housing with integrated electronics located within the receiver housing. In some embodiments, a hand-held medicament injection pen comprises a housing, and wherein the integrated electronics are located within the hand-held medicament injection pen housing. In some embodiments, a housing is configured to receive a hand-held medicament injection pen, wherein the housing includes integrated electronics therein. In some embodiments, a hand-held medicament injection pen kit is provided, wherein the hand-held medicament injection pen kit is configured to receive the hand-held medicament injection pen (and can be configured to receive other accessories, such as medicament cartridges, needles, and the like), wherein the integrated electronics are located within the hand-held medicament injection pen kit. In some embodiments, a receiver, integrated electronics and hand-held medicament injection pen are integrally formed into one housing.

A quartz crystal **176** is operably connected to an RF transceiver **178** that together function to receive and synchronize data streams via an antenna **180** (for example, transmission **140**). Once received, a processor module **182** processes the signals, such as described below. However other methods of wired or wireless communication can be substituted for the RF communication described herein.

The processor (or processor module) **182** is the central control unit that performs the processing, such as storing data, analyzing a continuous glucose sensor data stream, analyzing single point glucose values, accuracy checking, checking clinical acceptability, calibrating sensor data, downloading data, recommending therapy instructions, calculating medicament delivery amount, type and time, learning individual metabolic patterns, and controlling the user interface, by providing prompts, messages, warnings and alarms, and the like. The processor (or processor module) can include hardware and software that performs the processing described herein, including for example, read only memory (ROM), such as flash memory, provides permanent or semi-permanent storage of data, storing data such as sensor ID, receiver ID, and programming to process data streams (for example, programming for performing estimation and other algorithms described elsewhere herein), and random access memory (RAM) stores the system's cache memory and is helpful in data processing.

In some embodiments, the processor **182** monitors the continuous glucose sensor data stream **140** to determine a preferable time for capturing glucose concentration values, using the single point glucose monitor electronics **116** for calibration of the continuous sensor data stream. For example, when sensor glucose data (for example, observed from the data stream) changes too rapidly, a single point glucose monitor reading may not be sufficiently reliable for calibration during unstable glucose changes in the host; in contrast, when sensor glucose data are relatively stable (for example, relatively low rate of change), a single point glucose monitor reading can be taken for a reliable calibration. In some additional embodiments, the processor can prompt the user via the user interface to obtain a single point glucose value for calibration at predetermined intervals. In some additional embodiments, the user interface can prompt the user to obtain a single point glucose monitor value for calibration based upon certain events, such as meals, exercise, large excursions in glucose levels, faulty or interrupted data readings, and the like. In some embodiments, certain acceptability parameters can be set for reference values received from the single point glucose monitor. For example, in one embodiment, the receiver only accepts reference glucose data between about 40 and about 400 mg/dL.

In some embodiments, the processor **182** monitors the continuous glucose sensor data to determine a preferable time for medicament delivery, including type, amount, and time. In some embodiments, the processor is programmed to

detect impending clinical risk and can request data input, a reference glucose value from the single point glucose monitor, and the like, in order to confirm a therapy recommendation. In some embodiments, the processor is programmed to process continuous glucose data and medicament therapies, to adaptively adjust to an individual's metabolic patterns. In some embodiments, the processor is programmed to project glucose trends based on data from the integrated system (for example, medicament delivery information, user input, and the like). In some embodiments, the processor is programmed to calibrate the continuous glucose sensor based on the integrated single point glucose monitor **18**. Numerous other programming can be incorporated into the processor, as is appreciated by one skilled in the art, as is described in cited patents and patent applications here, and as is described with reference to flowcharts of FIGS. **15** and **16**.

A battery **192** is operably connected to the processor **182** and provides power for the receiver. In one embodiment, the battery is a standard AAA alkaline battery, however any appropriately sized and powered battery can be used. In some embodiments, a plurality of batteries can be used to power the system. In some embodiments, a power port (not shown) is provided permit recharging of rechargeable batteries. A quartz crystal **194** is operably connected to the processor **182** and maintains system time for the computer system as a whole.

A PC communication (com) port **190** can be provided to enable communication with systems, for example, a serial communications port, allows for communicating with another computer system (for example, PC, PDA, server, or the like). In one exemplary embodiment, the receiver is configured to download historical data to a physician's PC for retrospective analysis by the physician. The PC communication port **190** can also be used to interface with other medical devices, for example pacemakers, implanted analyte sensor patches, infusion devices, telemetry devices, and the like.

A user interface **196** includes a keyboard **198**, a speaker **100**, a vibrator **102**, a backlight **104**, a liquid crystal display (LCD) **106**, one or more buttons **108**, and/or a scroll wheel **44** (shown in FIG. **4**, for example). The components that comprise the user interface **196** provide controls to interact with the user. The keyboard **198** can allow, for example, input of user information about himself/herself, such as mealtime, exercise, medicament administration, and reference glucose values. The speaker **100** can provide, for example, audible signals or alerts for conditions such as present and/or predicted hyper- and hypoglycemic conditions. The vibrator **102** can provide, for example, tactile signals or alerts for reasons such as described with reference to the speaker, above. The backlight **104** can be provided, for example, to aid the user in reading the LCD in low light conditions. The LCD **106** can be provided, for example, to provide the user with visual data output. In some embodiments, the LCD is a touch-activated screen. The buttons **108** and/or scroll wheel **44** (see FIGS. **4** and **6**, for example) can provide for toggle, menu selection, option selection, mode selection, and reset, for example. In some alternative embodiments, a microphone can be provided to allow for voice-activated control.

The user interface **196**, which is operably connected to the processor **182**, serves to provide data input and output for both the continuous glucose sensor, the hand-held medicament injection pen, and/or for the single point glucose monitor. Data output includes a numeric estimated analyte value, an indication of directional trend of analyte concentration, a graphical representation of the measured analyte data over a period of time, alarms/alerts, therapy recommendations, actual therapy administered, event markers, and the like. In some embodiments, the integrated electronics are configured to display a representation of a target glucose value or target glucose range on the user interface. Some additional data representations are disclosed in Published U.S. Patent Application No. 2005-0203360, which is incorporated herein by reference in its entirety

FIG. **14** is a graphical representation of integrated data that can be displayed on an LCD screen **106**, for example, in one embodiment. In this embodiment, the integrated electronics are configured to display a representation of a value of the sensor data (illustrated by bars in this illustration) above or below the target glucose value (illustrated by a line at "145" (mg/dL) in FIG. **14**) or target glucose range (not shown) on the user interface. In the illustrated embodiment, the x-axis represents time and the y-axis represents glucose concentration in mg/dL. Glucose concentration is graphed over time according to its value as compared to a target (e.g., above and/or below the target). For example, if a target glucose concentration is set at 145 mg/dL and the actual glucose concentration is 180 mg/dL, then the bar value represents 35 mg/dL (180 mg/dL−145 mg/dL) above the target glucose concentration for that glucose measurement. While FIG. **14** shows the glucose concentration as a series of black bars, the data can be shown using a variety of symbols. For example, in one embodiment, the bars are colored, with green bars above the target and red bars below the target. In another embodiment using colored bars, the bars are colored as a gradient, wherein the bars within the target range are green, changing to yellow and then red as the host's glucose concentration is farther and farther away from the target range. In another embodiment, dots, circles, squares and the like are used instead of bars. In still another embodiment, stars, hearts, a thumbs-up graphic, and/or smiley-faces (colored and/or black and white) can be added to the graph to denote periods of time during which the host was within the target. In a further embodiment, the stars, hearts, a thumbs-up graphic, and/or smiley-faces can blink or flash as an award for staying within the target. In still another embodiment, instead of using colors, portions of the graph are made to blink/flash. For example, in one embodiment, a series of dots plot out the host's glucose concentration, with the most recent concentration blinking.

In some embodiments, the integrated electronics are configured to display a representation of medicament delivery on the user interface adjacent to substantially time-corresponding sensor data, which is illustrated as "10 U" and "7 U" in FIG. **14**, representing the units of medicament delivered in a bolus. In these embodiments, the representation of medicament delivery is located substantially adjacent to a glucose value measured at substantially the same time as the medicament delivery. It is believed that by providing a representation of medicament delivery on the user adjacent to substantially time-corresponding sensor data, a user can see the affect of the therapy (e.g., medicament bolus) on their glucose concentration and/or achievement of target glucose concentration.

In some embodiments, the integrated electronics are configured to display glucose data on the user interface for 1 hour, 3 hours, 6 hours, 9 hours, 1 day, 3 days, 5 days, 7 days, 1 month, 3 months, year-to-date, 1 year, 2 years, 5 years, and the like for example, which provides the user with actual, averaged or estimated glucose values over that time period. In some embodiments, the integrated electronics are configured to display glucose trend data (e.g., charts or graphs)

on the user interface, including a graphical representation of glucose values as they change over time. In some embodiments, the integrated electronics are configured to display comparison data for two periods (e.g., charts or graphs) on the user interface, including a trend-related finding between two specific periods of time. In some embodiments, the integrated electronics are configured to display modal day data (e.g., charts or graphs) on the user interface, including glucose summary data based on mealtimes. In some embodiments, the integrated electronics are configured to display modal week data (e.g., charts or graphs) on the user interface, including glucose summary data based on days of the week. In some embodiments, the integrated electronics are configured to display medicament dosage and effects data (e.g., charts or graphs) on the user interface, including medicament regimen information and changes in base medicament pattern. In some embodiments, the integrated electronics are configured to display hypoglycemia and hyperglycemia episode data (e.g., charts or graphs) on the user interface, including information regarding very low and very high glucose readings and/or glucose readings outside of a target range (which can be defined by the user in some embodiments). In some embodiments, the integrated electronics are configured to display rapid swings data (e.g., charts or graphs) on the user interface, including incidents of rapid swings between low and high blood glucose levels, which levels can be pre-programmed or settable by a user, for example.

In some embodiments, prompts or messages can be displayed on the user interface to convey information to the user, such as malfunction, outlier values, missed data transmissions, or the like, for the continuous glucose sensor. Additionally, prompts can be displayed to guide the user through calibration of the continuous glucose sensor. Even more, calibrated sensor glucose data can be displayed, which is described in more detail with reference to co-pending U.S. Patent Publication No. US-2005-0027463-A1 and U.S. Patent Publication No. US-2005-0203360-A1, each of which is incorporated herein by reference in their entirety.

In some embodiments, prompts or messages about the hand-held medicament injection pen can be displayed on the user interface to inform or confirm to the user type, amount, and time of medicament delivery. In some embodiments, the user interface provides historical data and analytes pattern information about the medicament delivery, and the host's metabolic response to that delivery, which may be useful to a patient or doctor in determining the level of effect of various medicaments.

Referring again to FIG. **13**, electronics **110** associated with the delivery device **16** are operably connected to the processor **182** and include a processor **112** for processing data associated with the delivery device **16** and include at least a wired or wireless connection **114** for transmission of data between the processor **182** of the receiver **14** and the processor module **112** of the delivery device **16**. In some embodiments, the delivery device electronics **110** are at least partially or fully incorporated into the integrated electronics, such that electronics **110** may not be required. Other electronics associated with any of the delivery devices cited herein, or other known delivery devices, can be implemented with the delivery device electronics **110** described herein, as is appreciated by one skilled in the art.

In some embodiments, the processor module **112** comprises programming for processing the delivery information in combination with the continuous sensor information. In some alternative embodiments, the processor **182** comprises programming for processing the delivery information in combination with the continuous sensor information. In some embodiments, both processors **182** and **112** mutually process information related to each component.

In some embodiments, the hand-held medicament injection pen **16** further includes a user interface (not shown), which can include a display and/or buttons, for example. U.S. Pat. No. 6,192,891, U.S. Pat. No. 5,536,249, and U.S. Pat. No. 6,471,689 describe some examples of incorporation of a user interface into a hand-held medicament injection pen, as is appreciated by one skilled in the art.

Electronics **116** associated with the optional single point glucose monitor **18** are operably connected to the processor module **120** and include a potentiostat **118**, in one embodiment, that measures a current flow produced at the working electrode when a biological sample is placed on the sensing membrane, such as described above.

Algorithms

FIG. **15** is a flow chart that illustrates the process **230** of validating therapy instructions prior to medicament delivery, in one embodiment. In some embodiments, the system is configured with programming that provides for validation of therapy recommendations. In some embodiments, the therapy recommendations include a suggestion, on the user interface, of time, amount, and type of medicament to delivery. In some embodiments, therapy instructions include calculating a time, an amount, and/or a type of medicament delivery to administer, and optionally transmitting those instructions to the delivery device. In some embodiments, therapy instructions include that portion of a closed loop system wherein the determination and delivery of medicament is accomplished, as is appreciated by one skilled in the art.

In some embodiments, the therapy recommendations are displayed on a user interface (e.g., of an integrated housing) by representative icons, such as a syringe, a medicament pen, a medicament pump, an apple, orange juice, candy bar, or any icon representative of eating, drinking, or administering therapy, for example. Additionally or alternatively, the therapy recommendations can be preset alphanumeric messages, for example, "3.0 Units," "consume carbohydrates," "inject medicament" or "no therapy required", and can include brand names, amounts, times, acronyms, codes and the like. In response to the recommendation of therapy displayed on the user interface, the user can confirm, modify, and/or cancel the recommended therapy, after which, the integrated hand-held medicament injection pen is configured to administer the appropriate therapy.

Although computing and processing of data is increasingly complex and reliable, there are circumstances in which the therapy recommendations necessitate human intervention. Some examples include when a user is about to alter his/her metabolic state, for example due to a behavior such as exercise, meal, pending manual medicament delivery, and the like. In such examples, the therapy recommendations determined by the programming may not have considered present or upcoming behavior, which can change the recommended therapy. Numerous such circumstances can occur, such that a validation can be advantageous in order to ensure that therapy recommendations are appropriately administered.

At block **232**, a sensor data receiving module, also referred to as the sensor data module, receives sensor data (e.g., a data stream), including one or more time-spaced sensor data points, from a sensor via the receiver, which can be in wired or wireless communication with the sensor. The sensor data point(s) can be raw or smoothed, such as

described in U.S. Patent Publication No. US-2005-0043598-A1, which is incorporated herein by reference in its entirety.

At block **234**, a medicament calculation module, which is a part of a processor module, calculates a recommended medicament therapy based on the received sensor data. A variety of algorithms can be used to calculate a recommended therapy as is appreciated by one skilled in the art.

At block **236**, a validation module, which is a part of the processor module, optionally validates the recommended therapy. The validation can include a request, from the user or another component of the integrated system **10**, for additional data to ensure safe and accurate medicament recommendation or delivery. In some embodiments, the validation module requests and/or considers additional input, such as time of day, meals, sleep, calories, exercise, sickness, or the like. In some embodiments, the validation module is configured to request this information from the user. In some embodiments, the validation module is responsive to a user inputting such information.

In some embodiments, when the integrated system **10** is in a fully automated mode, the validation module is triggered when a potential risk is evaluated. For example, when a clinically risky discrepancy is evaluated, when the acceleration of the glucose value is changing or is low (indicative of a significant change in glucose trend), when it is near a normal meal, exercise or sleep time, when a medicament delivery is expected based on an individual's dosing patterns, and/or a variety of other such situations, wherein outside influences (meal time, exercise, regular medicament delivery, or the like) may require additional consideration in the therapy instructions. These conditions for triggering the validation module can be pre-programmed and/or can be learned over time, for example, as the processor module monitors and patterns an individual's behavior patterns.

In some embodiments, the system can be programmed to request additional information from the user regarding outside influences unknown to the integrated system prior to validation. For example, exercise, food or medicament intake, rest, and the like can be input into the receiver for incorporation into a parameter of the programming (algorithms) that processes the therapy recommendations.

At block **238**, the receiver confirms and sends (for example, displays, transmits and/or delivers) the therapy recommendations. In some embodiments, the receiver can simply confirm and display the recommended therapy, for example. In some embodiments, the receiver can confirm, transmit, and optionally deliver instructions, to the delivery device, regarding the recommended therapy, for example. In some embodiments, the receiver can confirm and ensure the delivery of the recommended therapy, for example. In some embodiments, a glucose value measured by the single point glucose monitor is used to validate the therapy recommendation. It is noted that these examples are not meant to be limiting and there are a variety of methods by which the receiver can confirm, display, transmit, and/or deliver the recommended therapy, within the scope of the preferred embodiments.

FIG. **16** is a flow chart **240** that illustrates the process of providing adaptive metabolic control using an integrated system, in one embodiment. In this embodiment, the integrated system is programmed to learn the patterns of the individual's metabolisms, including metabolic response to medicament delivery.

In some embodiments, the system is configured with programming that provides therapy recommendations based on at least one of the following: glucose concentration, glucose trend information (e.g., rate of change, acceleration, etc), predicted glucose values, food intake (e.g., carbohydrates), exercise, illness, sleep, time of day, and the like. In one such example, the system is configured to request carbohydrate and exercise information, from the user, which is used in combination with data from the continuous glucose sensor to calculate a recommended dose of medicament for injection (e.g., with a hand-held medicament injection pen). In some embodiments, when the user's glucose concentration falls outside of a target range (or is predicted to fall outside of a target range), a recommended therapy is displayed on the user interface (e.g., of an integrated pen as described above), wherein the user has an opportunity to validate the therapy recommendation prior to injection of medicament. After the user has injected the medicament, the amount (and type, etc) of medicament, which is stored in the integrated system, is analyzed, in combination with the user's metabolic response (i.e., continuous glucose data) over a predetermine time period (e.g., minutes to hours after injection), to determine whether the amount (and/or type) of medicament administered affected a desired change (e.g., glucose concentration within a target range). Preferably, the system's programming is configured to process the medicament delivery information and the continuous glucose sensor information, to adaptively adjust therapy recommendations to an individual's metabolic patterns. Namely, with each medicament injection and/or over multiple medicament injections, the system is configured to adaptively learn how a user responds to various therapies and to adaptively adjust the calculation of therapy recommendations accordingly.

At block **242**, a medicament data receiving module, which can be programmed within the receiver **14** and/or medicament delivery device **16**, receives medicament delivery data, including time, amount, and/or type. In some embodiments, the user is prompted to input medicament delivery information into the user interface. In some embodiments, the medicament delivery device **16** sends the medicament delivery data to the medicament data-receiving module.

At block **244**, a sensor data receiving module, also referred to as the sensor data module, receives sensor data (e.g., a data stream), including one or more time-spaced sensor data points, from a sensor via the receiver, which can be in wired or wireless communication with the sensor.

At block **246**, the processor module, which can be programmed into the receiver **14** and/or the delivery device **16**, is programmed to monitor the sensor data from the sensor data module **242** and medicament delivery data from the medicament delivery module **244** to determine an individual's metabolic profile, including their response to various times, amounts, and/or types of medicaments. The processor module can use any pattern recognition-type algorithm, as is appreciated by one skilled in the art, to quantify the individual's metabolic profile.

At block **248**, a medicament calculation module, which is a part of a processor module, calculates the recommended medicament based on the sensor glucose data, medicament delivery data, and/or the host's individual's metabolic profile. In some embodiments, the recommended therapy is validated such as described with reference to FIG. **15**, above. In some embodiments, the recommended therapy is manually, semi-automatically, or automatically delivered to the host.

At block **250**, the process of monitoring and evaluation a host's metabolic profile is repeated with each receipt of new medicament delivery data, wherein the processor monitors the sensor data and the associated medicament delivery data to determine the individual's metabolic response, in order to

adaptively adjust to newly determined metabolic profile or patterns, if necessary. This process can be continuous throughout the life of the integrated system, can be initiated based on conditions met by the continuous glucose sensor, can be triggered by a patient or doctor, and/or can be provided during a start-up or learning phase.

While not wishing to be bound by theory, it is believed that by adaptively adjusting the medicament delivery based on an individual's metabolic profile, including response to medicaments, improved long-term patient care and overall health can be achieved.

Integrated Systems for Clinical Settings

FIG. **17** is a block diagram illustrating an integrated diabetes monitoring and treatment system for use in a clinical setting, in one embodiment. The integrated system includes a continuous glucose sensor **12** configured to continuously detect a signal associated with a glucose concentration of a host, a processor module **182** configured and arranged to process the signal to generate sensor data and a therapy instruction, wherein the therapy instruction comprises a deliverable medicament dose in some embodiments, and a communication module **1700** configured and arranged to communicate the therapy instruction between the processor module and a medicament delivery device **16**, such as one or more hand-held medicament injection pens. Although much of the description is related to hand-held medicament injection pens, the preferred embodiments can be applied to any such medicament delivery device configured for bolus therapy, such as medicament inhalers, and/or the like. In one exemplary embodiment, the glucose sensor is implanted in a host. In some embodiments, a processor module **182** associated with the sensor, processes the sensor data to calculate and medicament therapy (e.g., a medicament dose to be delivered to the host) and a communication module **1700** communicates the medicament therapy instruction to the hand-held medicament injection pen **16**, such as but not limited to via wireless communication. In some embodiments, the processor continually calculates a deliverable medicament dose that can be transmitted to a hand-held medicament injection pen within range of the communication module. In other embodiments, the processor module calculates the medicament therapy in response to interrogation by a hand-held medicament injection pen, such as via wireless communication. For example, a caretaker can use a hand-held medicament injection pen **16** to interrogate the patient's continuous glucose sensor **12**, to receive the medicament therapy instruction (e.g., identification of the host and a deliverable medicament dose calculated by the processor module **182**; communicated to the hand-held medicament injection pen by the communication module **1700**). In some preferred embodiments, the continuous glucose sensor includes the processor module configured to determine a medicament therapy instruction. However, in some embodiments, the system is configured such that at least a portion of the processor module is disposed within the hand-held medicament injection pen, such that the medicament device performs at least some of the calculations to generate the medicament therapy instruction. In some embodiments, the continuous glucose sensor includes only the minimal electronics necessary to collect the sensor data and (optionally) process the collected data into a data packet that is then communicated to the hand-held medicament injection pen, wherein the hand-held medicament injection pen includes a processor module and processes the data received to generate the medicament therapy instruction. Various intermediate configurations can be appreciated by one skilled in the art.

After receiving the medicament therapy instruction, the caretaker can deliver the medicament dose to the patient, simply by actuating the medicament injection pen. As shown in FIG. **17**, the continuous glucose sensor **12** is configured and arranged to communicate with a plurality of hand-held medicament injection pens (**16***n*), such that in a clinical setting, such as a hospital, each caretaker can carry a hand-held medicament injection pen and use that hand-held medicament injection pen to deliver medicament to the patient (host) as a part of the normal course of patient care, similar to the practice of measuring the patient's temperature, pulse, blood pressure, respiration, pO_2, urine output, and the like, at regular intervals as determined by hospital protocol.

In preferred embodiments, the processor module **182** includes an input module configured for the input of host information and/or a therapy instruction. Preferably, the device is configured and arranged to be programmed (e.g., operated) by an external programmer, such as a caretaker. Such information can be input into the device when the continuous glucose sensor **12** is implanted in the host. For example, in some embodiments, the input module is configured to receive information from a user interface, a hand-held medicament injection pen, an infusion pump, a patient monitor, a single-point glucose monitor, a receiver, and the like. In some embodiments, the information can be input via a user interface incorporated into the continuous glucose sensor or via the hand-held medicament injection pen, which can include a user interface. In other embodiments, the information can be input via a tertiary device having a user interface and configured for communication with the communication module, such as but not limited to a computer, patient monitor, PDA and the like.

In preferred embodiments, host information that can be input via an input module associated with the continuous glucose sensor and/or the hand-held medicament injection pen, wherein the host information includes but is not limited to a host ID, such as a unique identifying code assigned to a patient, host physical characteristics, a type of medicament to be delivered to the host, a therapy protocol assigned to the host, and the like. A therapy instruction includes but is not limited to selection of a therapy protocol and/or portions thereof, including but not limited to a target host blood glucose concentration and/or range of concentrations, selection of an alert to be sounded if the host meets a predetermined criterion, and the like. In preferred embodiments, the therapy instruction comprises at least one of a type of medicament, a medicament dose, and a delivery time. The integrated electronics are further configured and arranged to process host information and/or a therapy instruction. For example, the integrated electronics can process the continuous glucose sensor data in the context of a selected protocol, such that medicament therapies are calculated to maintain the host within a target blood glucose concentration range (e.g., 100-140 mg/dl blood glucose), for example. In preferred embodiments, the device includes a display module configured and arranged for display of the host information, sensor data, the therapy instruction, the deliverable medicament dose, an alert and/or an alarm.

In some embodiments, the system is configured for communication with a data repository system and/or device (e.g., portable and/or remotely located) configured to receive host information, sensor data, the therapy instruction, the deliverable medicament dose, an alert, an alarm, a predictive alarm, and the like. For example, in some embodiments, the communication module is configured to transmit information related to the host and his/her treatment to a data

repository that records and tracks the host's condition and/or enters the data into the host's patient chart. For example, the data can be electronically entered into the host's patient chart remotely, such as in medical records. In another embodiment, the information can be monitored remotely by the patient's physician using a data repository device integrated into a display device, such as a personal computer, cell phone, PDA and the like, which enables the physician to receive predictive alarms of upcoming problems/events or alarms/alerts related to the host's current physical state. Similarly, when the physician visits the host, he can use a portable data repository to collect pertinent data from the continuous glucose sensor. In one exemplary embodiment, the continuous glucose sensor is configured to communicate data and information related to the medicament therapy to a separate and/or remote data repository, for example, wherein the sensor is configured to transmit this information to a remote monitor carried by the physician or at the nurse's station, or to a remote location (e.g., medical records) for storage and/or monitoring. In another exemplary embodiment, the hand-held medicament injection pen (e.g., insulin pen) is configured to communicate data received from the continuous glucose sensor (e.g., via the communication module) and information related to medicament therapy delivered to the host to the separate and/or remote data repository, for example, by transmitting this information to a remote monitor carried by the physician or at the nurse's station, or to a remote location (e.g., medical records) for storage and/or monitoring.

As shown in FIG. **17**, the integrated system includes a hand-held medicament injection pen **16**, configured to communicate with the continuous glucose sensor **12** (e.g., and vice versa) and to deliver a medicament to the host. In some embodiments, the system is configured to communicate with a plurality of hand-held medicament injection pens **16***n*. For example, in one embodiment, the system is configured such that a host wearing a continuous glucose sensor can be monitored and/or treated by a plurality of caretakers, each of whom carries a hand-held medicament injection pen. For example, the host's sensor is configured to communicate with a first caretaker's hand-held medicament injection pen, then a second caretaker's hand-held medicament injection pen, and so on. As a non-limiting example, for a host in the hospital, at the initiation of each work shift, a new nurse can check the host's glucose level (e.g., via communication between the host's sensor and the nurse's hand-held medicament injection pen, as described herein) and deliver insulin, if needed. Accordingly, the continuous glucose sensor and the hand-held medicament injection pen(s) can communicate with each other when operably connected, to allow wired and/or wireless communication therebetween.

FIG. **18** is a block diagram illustrating a medicament delivery device for monitoring and treating diabetes in one or more host, such as but not limited to in a clinical setting, in another embodiment. Although much of the description is related to hand-held medicament injection pens, the preferred embodiments can be applied to any such medicament delivery device configured for bolus therapy, such as medicament inhalers, and/or the like. The medicament delivery device **16** includes a communication module **1700** configured to interrogate an operably connected continuous glucose sensor **12** and to receive sensor data (e.g., a signal associated with a glucose concentration of a host) therefrom, a processor module **182** configured to process the sensor data and calculate a medicament therapy, and a hand-held medicament injection pen (e.g., configured to receive a cartridge of medicament for injection) configured and arranged to deliver medicament based at least in part on the medicament therapy. In some embodiments, the system is configured for use with a continuous glucose sensor configured and arranged for transcutaneous implantation in the host, such as for use in the general wards, in which case the signal generated by the glucose sensor can be measured in the interstitial fluid, for example. In other embodiments, the system is configured for use with a continuous glucose sensor configured and arranged for implantation in the host's circulatory system (e.g., via an artery or vein) or in an extracorporeal blood circulation device, in which case the signal generated by the glucose sensor is associated with a glucose concentration of a sample of the host's circulatory system.

In one embodiment, the communication module **1700**, which can be integrally formed with the hand-held medicament injection pen or in wired or wireless communication therewith or detachably connected to the hand-held medicament injection pen, is configured to receive information from an operably connected continuous glucose sensor when the hand-held medicament injection pen interrogates it. The hand-held medicament injection pen and the continuous glucose sensor can be operably connected using any method known in the art, such as but not limited to by wired and/or wireless communication. In one embodiment, the caretaker can simply hold the hand-held medicament injection pen within a predetermined communication range, such that the hand-held medicament injection pen and continuous glucose sensor can communicate with each other by wireless communication, such as RF, IR, Bluetooth, and the like. In another embodiment, the system is configured such that the hand-held medicament injection pen can communicate with the sensor via inductive coupling communication when the caretaker holds the pen adjacent to the sensor or touches the pen to the sensor. A variety of alternative useful communication methodologies are appreciated by one skilled in the art.

In some embodiments, the hand-held medicament injection pen **16** includes a processor module **182** that includes programming for calculating the medicament therapy based at least in part on the sensor data, as described elsewhere herein. For example, the programming directs use of algorithms for calculating an amount of medicament to be delivered to the host, based at least in part on the sensor data received from the host's continuous glucose sensor. In preferred embodiments, the processor module calculates dosing information (e.g., a type of medicament to be delivered, an amount of medicament to be delivered and a time of delivery, and/or the like) using one or more algorithms described elsewhere herein. While the embodiment shown in FIG. **18** depicts the processor module **182** disposed within the hand-held medicament injection pen, in some embodiments, some or all of the processor electronics and/or functions can reside within the continuous analyte sensor(s) **12***n*. For example, in some embodiments, the electronics/components/modules (e.g., processor module, communication module, and the like) of receiver **14**, as depicted in FIG. **18**, can be distributed among other integrated system components, such as but not limited to the continuous analyte sensor **12** and the hand-held medicament injection pen.

In some embodiments, the processor module **182** is configured for validation of the dosing information. For example, the processor module can request validation of a calculated medicament dose and/or identification of the host prior to injection of the dose into the host. In some embodiments, the system is configured to disallow/prevent injection unless at least the dose (e.g., medicament identity, amount of

medicament to be delivered and/or time of delivery) and/or host information has been validated. For example, the hand-held medicament injection pen can interrogate a first continuous glucose sensor, calculate a medicament dose and request validation prior to allowing the caretaker to inject the calculated dose into the host. The caretaker can move on to a second host and repeat the process. Accordingly, accidental injection (e.g., of one host's medicament dose into another host) can be avoided.

Preferably, the hand-held medicament injection pen includes a user interface, such as that described with reference to FIG. **13**, configured and arranged for input and/or display of at least some medical information, wherein medical information comprises at least one of host information, received sensor data, processed sensor data, the calculated medicament therapy, a delivered medicament therapy, an instruction, an alert, an alarm and a failsafe. Host information includes at least one of a host ID, type of medicament to be received, a target glucose level and/or range, predicted hypoglycemia/hypoglycemia, a therapy protocol, an alert, and an alarm. In some embodiments, the user interface is detachably connected to the hand-held medicament injection pen, such as via mutually engaging contacts that allow communication therebetween then the user interface is connected with the hand-held medicament injection pen. However, in other embodiments, the user interface (in part or in its entirety) is integrally formed with the hand-held medicament injection pen.

In some embodiments, the hand-held medicament injection pen includes a communication module **1700** configured to communicate treatment information (e.g., host information, continuous glucose information, the therapy protocol, dosing information, medicament type, medicament delivered and time of medicament delivery) to a central monitor. A central monitor can be a device configured to receive information communicated from one or more hand-held medicament injection pens, such as a computerized device including a user interface for display of received information and optionally for communicating commands/instructions back to one or more hand-held medicament injection pens. In some embodiments, a central monitor can include one or more intermediate receiving devices, located about the hospital ward or at the nurses' station, and configured to receive the communicated information wirelessly, and then to relay the communicated information to the central monitor via a wired and/or wireless connection. In some embodiments, the system can be configured such that when a caretaker moves within a range of the intermediate receiving device and/or the central monitor itself, the receiving device/central monitor recognizes the hand-held medicament injection pen and triggers the pen to download information related to treatment of the host(s). Alternatively, recognition of the receiving device/central monitor by the hand-held medicament injection pen triggers the information download. The central monitor can be located in a centralized location, such as at the nurses' station or in medical records, or in a more private remote location, such as in the physician's office or in a nurse supervisor's office. Location of the central monitor at a location remote from the glucose sensor(s) and/or hand-held medicament injection pen enables remote monitoring of hand-held medicament injection pen use (e.g., how, when & where it is used) and/or function (e.g., if it is functioning properly).

In some embodiments, at least a portion of the system is configured provide adaptive metabolic control of the host's glucose, as described with reference to FIG. **16**. Accordingly, the processor module is configured to receive sensor data and medicament therapy data (e.g., information related to medicament delivery to the host) and to monitor the sensor data for the host's metabolic response to the delivered medicament therapy. Accordingly, the system can calculate new medicament therapy based on the host's metabolic response to the medicament deliver. For example, if the host is highly sensitive to insulin, the system can intelligently monitor the host's response to an insulin dose and recalculate new medicament doses to take the host's insulin sensitivity into account. For example, in this particular circumstance, the processor module can calculate a small insulin dose, such that the host's glucose is maintained within the target range and hypoglycemia can be avoided. In another example, a host may be very insensitive to insulin. In the case of this insulin insensitive host, the system can monitor the lack of glucose concentration decreases upon insulin therapy delivery, and re-calculate future insulin doses (e.g., increase the volume of insulin delivered in a bolus dose and/or increase a basal delivery rate), such that this host's glucose can be maintained in the target range.

Integrated Systems for Ambulatory Use

FIG. **19** is a block diagram illustrating an integrated system (monitoring and treating diabetes) for ambulatory use, in one embodiment. Such a system can be used by an ambulatory host to accurately monitor and treat his diabetes in real-time, by continuously monitoring his blood glucose level and infusing/injecting medicament with a basal medicament delivery device (e.g., a medicament pump) and a bolus medicament delivery device (e.g., a hand-held medicament injection pen) based at least in part on the data generated by the continuous glucose sensor, in either an open-loop, closed-loop or semi-closed-loop manner. In this embodiment, the integrated system includes a receiver **14** configured and arranged to receive continuous glucose sensor data from an operably connected continuous glucose sensor **12** implanted in a host, a processor module configured to process the continuous glucose sensor data and to provide medicament dosing information based at least in part on the continuous glucose sensor data, and a communication module configured and arranged to communicate the medicament dosing information with the medicament delivery devices **16***a* and **16***b*. Although a separate receiver is illustrated in FIG. **19**, the receiver **14**, including the processor module and/or communication module, can be located with the continuous glucose sensor, the basal medicament delivery device, the bolus medicament delivery device and/or combinations thereof, eliminating a need for a separately housed receiver.

In some embodiments, the basal medicament delivery device **16***a* is a medicament pump **16***a*, and the medicament dosing information comprises a basal dose of medicament. Accordingly, the processor module comprises programming to calculate the basal dose based at least in part on the continuous glucose sensor data. The receiver is configured to communicate the basal dose to the medicament pump, which, in turn, is configured to infuse the basal medicament dose into the host. Since the glucose sensor is a continuous glucose sensor, the system can be configured to continually recalculate the basal medicament dose and readjust the dose according to the host's needs, as indicated by the sensor data generated by the continuous glucose sensor. This enables adaptive metabolic control **240**, as described with reference to FIG. **16**, and optimized, real-time patient care.

In some preferred embodiments, the bolus medicament delivery device **16***b* is a hand-held medicament injection pen **16***b* and the medicament dosing information comprises a bolus medicament dose. Accordingly, the processor module

comprises programming to calculate a bolus dose of medicament based at least in part on the continuous glucose sensor data. In some embodiments, the hand-held medicament injection pen is configured to infuse the same medicament as the medicament pump, while in other embodiments, the hand-held medicament injection pen is configured to infuse a medicament other than the medicament infused by the medicament pump, as is described in greater detail below. In some embodiments, the hand-held medicament injection pen includes a motor. The motor can be configured to automatically set the amount of medicament based at least in part on the medicament dosing information. For example the medicament dosing information can include an instruction for the hand-held medicament injection pen to automatically portion out a bolus medicament dose, which can be manually delivered by the host. In a further embodiment, the medicament is not delivered manually (e.g., by the host actuating a plunger to inject the medicament), rather the medicament is delivered semi-automatically, such that the host can hold the pen against the injection site (e.g., as if to inject the medicament) and actuate the pen to inject the medicament automatically. In this embodiment, the motor of the hand-held medicament injection pen can be configured to control a rate of medicament injection into the host and the medicament dosing information comprises an instruction for the hand-held medicament injection pen to deliver the bolus dose at a programmed rate. For example, it is known that the activity of injected medicament is dependent, in part, on the rate of injection. The hand-held medicament injection pen can be configured to inject the medicament at a rate selected to optimize the medicament's activity. Accordingly, the host's management of his blood sugar can be optimized and more consistent.

In some embodiments, the integrated system is configured for use with at least two hand-held medicament injection pens, such as both a medicament pump **16***a* and a hand-held medicament injection pen **16***b*. While the host may choose to use a single type of medicament in both devices, the convenient use of multiple modes of medicament delivery is enabled by this embodiment. For example, a first medicament delivery pump can be configured to deliver a first type of medicament, a second hand-held medicament injection pen can be configured to deliver a second type of medicament, and so on. In one exemplary embodiment, a medicament pump **16***a* is configured to deliver a long-acting medicament while a hand-held medicament injection pen **16***b* is configured to deliver a short-acting medicament. In a second exemplary embodiment, a medicament pump **16***a* is configured to deliver the short-acting medicament while a hand-held medicament injection pen **16***b* is configured to deliver the long-acting medicament. In a third exemplary embodiment, the two medicament delivery devices are configured to deliver the same type of medicament. For example, a basal medicament delivery device **16***a* can be configured to frequently deliver small doses (e.g., basal doses) of a short-acting insulin while a bolus medicament delivery device **16***b* can be configured to deliver a large dose (e.g., a bolus) of the short-acting insulin. Additional configurations are contemplated in the preferred embodiments. Regardless, of the type of medicament delivered and the delivery device used, the processor module includes programming to calculate the dose of that particular medicament in response to the continuous glucose sensor data, such that the host can be maintained within a target blood glucose range.

In preferred embodiments, the communication module is configured and arranged for wireless communication with the integrated hand-held medicament injection pen(s) **16***a*/**16***b*, as described elsewhere herein. In some embodiments, the communication module comprises a transceiver configured and arranged to interrogate and/or provide medicament dosing information to the integrated hand-held medicament injection pen, however, other modes of wireless communication can be used. Preferably, the communication module is configured and arranged to enable communicate between the at least two integrated medicament delivery devices, such as but not limited to a medicament pump and a hand-held medicament injection pen. However, the use of additional hand-held medicament injection pens (e.g., a pump and two pens) is contemplated in the preferred embodiments. Preferably, in preferred embodiments, the communication module is configured and arranged to communicate with the at least two integrated medicament delivery devices simultaneously, for example, within substantially the same time period. Accordingly, the processor module calculates both the basal and bolus therapy recommendations for the devices, respectively, considering both the basal and bolus therapies together, and wherein the communication module is configured to communicate with the basal and bolus medicament delivery devices(s), such as to optimize control of the host's blood glucose level, such as maintaining the host's glucose level within a target range. In some embodiments, the communication module is configured to provide notification to the user, relating to injection of the medicament. For example, in some embodiments, the communication module can alert the host (e.g., via the receiver or one of the hand-held medicament injection pens) that a medicament dose is recommended, is being injected and/or has been injected, and optionally require validation of the medicament dose, as described elsewhere herein. For example, in one embodiment, the receiver and/or hand-held medicament injection pen is configured to emit an auditory alert (e.g., beep or buzz) when a bolus medicament dose have been calculated and is ready to be delivered.

In preferred embodiments, the integrated system includes a user interface configured and arranged to display continuous glucose sensor data and/or medicament dosing information. In some embodiments, the user interface is further configured for input of host information and/or medicament delivery device information, wherein the medicament delivery device information is associated with a medicament pump and a hand-held medicament injection pen. As described elsewhere herein, the host information can include at least one of host identity, host physical state, target glucose concentration and type of medicament to be delivered, and the like. Also described elsewhere herein, the medicament delivery information can include at least one of host identity, identification of a functionally connected hand-held medicament injection pen, a type of medicament to be delivered, a medicament delivery profile and/or protocols and a failsafe, and the like.

In one example, the host can use an integrated system including a continuous glucose sensor **12** (e.g., a sensor as described with reference to FIGS. **2**B-**2**D), a receiver **14**, a medicament infusion pump **16***a* and a hand-held medicament injection pen **16***b*, wherein the receiver is configured and arranged for wireless communication with the sensor, the medicament pump and the hand-held medicament injection pen. The receiver includes a user interface that is configured such that the host can program the system, such as using a toggle button and/or scroll wheel to select instructions on a display integrated into the receiver. In some

embodiments, the receiver is integral with or detachably connected to either the medicament pump or the hand-held medicament injection pen (see FIGS. **3-12**), such that the host is required to carry only the pump and the pen (e.g., instead of three devices; a receiver, a pump and a pen). In some embodiments, a medicament injection pen kit is provided, as described with reference to FIGS. **6-7**. Preferably, the system is configured such that the host can program the medicament pump to deliver basal medicament doses and the hand-held medicament injection pen to deliver bolus medicament doses, all of which are based at least in part on sensor data generated by and received from the continuous glucose sensor, whereby the processor module processes the received sensor data, calculates the medicament doses (basal and/or bolus) and coordinates the delivery of the medicament doses to the host. For example, the processor module can calculate the basal medicament doses and automatically instruct the medicament pump to infuse the basal doses into the host (based at least in part on the continuous glucose sensor data). Substantially simultaneously, the processor module can calculate bolus medicament doses and set the hand-held medicament injection pen to deliver the calculated bolus dose, and then alert the host to inject the bolus dose. Advantageously, the host is afforded greater control and flexibility in managing his blood sugar, which, in turn, enables increased host health and reduced complication of his diabetes.

Methods and devices that are suitable for use in conjunction with aspects of the preferred embodiments are disclosed in U.S. Pat. No. 4,994,167; U.S. Pat. No. 4,757,022; U.S. Pat. No. 6,001,067; U.S. Pat. No. 6,741,877; U.S. Pat. No. 6,702,857; U.S. Pat. No. 6,558,321; U.S. Pat. No. 6,931,327; U.S. Pat. No. 6,862,465; U.S. Pat. No. 7,074,307; U.S. Pat. No. 7,081,195; U.S. Pat. No. 7,108,778; U.S. Pat. No. 7,110,803; U.S. Pat. No. 7,192,450; U.S. Pat. No. 7,226,978; U.S. Pat. No. 7,310,544; U.S. Pat. No. 7,364,592; and U.S. Pat. No. 7,366,556.

Methods and devices that are suitable for use in conjunction with aspects of the preferred embodiments are disclosed in U.S. Patent Publication No. US-2005-0143635-A1; U.S. Patent Publication No. US-2005-0181012-A1; U.S. Patent Publication No. US-2005-0177036-A1; U.S. Patent Publication No. US-2005-0124873-A1; U.S. Patent Publication No. US-2005-0115832-A1; U.S. Patent Publication No. US-2005-0245799-A1; U.S. Patent Publication No. US-2005-0245795-A1; U.S. Patent Publication No. US-2005-0242479-A1; U.S. Patent Publication No. US-2005-0182451-A1; U.S. Patent Publication No. US-2005-0056552-A1; U.S. Patent Publication No. US-2005-0192557-A1; U.S. Patent Publication No. US-2005-0154271-A1; U.S. Patent Publication No. US-2004-0199059-A1; U.S. Patent Publication No. US-2005-0054909-A1; U.S. Patent Publication No. US-2005-0051427-A1; U.S. Patent Publication No. US-2003-0032874-A1; U.S. Patent Publication No. US-2005-0103625-A1; U.S. Patent Publication No. US-2005-0203360-A1; U.S. Patent Publication No. US-2005-0090607-A1; U.S. Patent Publication No. US-2005-0187720-A1; U.S. Patent Publication No. US-2005-0161346-A1; U.S. Patent Publication No. US-2006-0015020-A1; U.S. Patent Publication No. US-2005-0043598-A1; U.S. Patent Publication No. US-2005-0033132-A1; U.S. Patent Publication No. US-2005-0031689-A1; U.S. Patent Publication No. US-2004-0186362-A1; U.S. Patent Publication No. US-2005-0027463-A1; U.S. Patent Publication No. US-2005-0027181-A1; U.S. Patent Publication No. US-2005-0027180-A1; U.S. Patent Publication No. US-2006-0020187-A1; U.S. Patent Publication No. US-2006-0036142-A1; U.S. Patent Publication No. US-2006-0020192-A1; U.S. Patent Publication No. US-2006-0036143-A1; U.S. Patent Publication No. US-2006-0036140-A1; U.S. Patent Publication No. US-2006-0019327-A1; U.S. Patent Publication No. US-2006-0020186-A1; U.S. Patent Publication No. US-2006-0036139-A1; U.S. Patent Publication No. US-2006-0020191-A1; U.S. Patent Publication No. US-2006-0020188-A1; U.S. Patent Publication No. US-2006-0036141-A1; U.S. Patent Publication No. US-2006-0020190-A1; U.S. Patent Publication No. US-2006-0036145-A1; U.S. Patent Publication No. US-2006-0036144-A1; U.S. Patent Publication No. US-2006-0016700-A1; U.S. Patent Publication No. US-2006-0142651-A1; U.S. Patent Publication No. US-2006-0086624-A1; U.S. Patent Publication No. US-2006-0068208-A1; U.S. Patent Publication No. US-2006-0040402-A1; U.S. Patent Publication No. US-2006-0036142-A1; U.S. Patent Publication No. US-2006-0036141-A1; U.S. Patent Publication No. US-2006-0036143-A1; U.S. Patent Publication No. US-2006-0036140-A1; U.S. Patent Publication No. US-2006-0036139-A1; U.S. Patent Publication No. US-2006-0142651-A1; U.S. Patent Publication No. US-2006-0036145-A1; U.S. Patent Publication No. US-2006-0036144-A1; U.S. Patent Publication No. US-2006-0200022-A1; U.S. Patent Publication No. US-2006-0198864-A1; U.S. Patent Publication No. US-2006-0200019-A1; U.S. Patent Publication No. US-2006-0189856-A1; U.S. Patent Publication No. US-2006-0200020-A1; U.S. Patent Publication No. US-2006-0200970-A1; U.S. Patent Publication No. US-2006-0183984-A1; U.S. Patent Publication No. US-2006-0183985-A1; U.S. Patent Publication No. US-2006-0195029-A1; U.S. Patent Publication No. US-2006-0229512-A1; U.S. Patent Publication No. US-2006-0222566-A1; U.S. Patent Publication No. US-2007-0032706-A1; U.S. Patent Publication No. US-2007-0016381-A1; U.S. Patent Publication No. US-2007-0027370-A1; U.S. Patent Publication No. US-2007-0027384-A1; U.S. Patent Publication No. US-2007-0032718-A1; U.S. Patent Publication No. US-2007-0059196-A1; U.S. Patent Publication No. US-2007-0066873-A1; U.S. Patent Publication No. US-2007-0093704-A1; U.S. Patent Publication No. US-2007-0197890-A1; U.S. Patent Publication No. US-2007-0173710-A1; U.S. Patent Publication No. US-2007-0163880-A1; U.S. Patent Publication No. US-2007-0203966-A1; U.S. Patent Publication No. US-2007-0213611-A1; U.S. Patent Publication No. US-2007-0232879-A1; U.S. Patent Publication No. US-2007-0235331-A1; U.S. Patent Publication No. US-2008-0021666-A1; U.S. Patent Publication No. US-2008-0033254-A1; U.S. Patent Publication No. US-2008-0045824-A1; U.S. Patent Publication No. US-2008-0071156-A1; U.S. Patent Publication No. US-2008-0086042-A1; U.S. Patent Publication No. US-2008-0086044-A1; U.S. Patent Publication No. US-2008-0086273-A1; U.S. Patent Publication No. US-2008-0083617-A1; U.S. Patent Publication No. US-2008-0119703-A1; and U.S. Patent Publication No. US-2008-0119706-A1.

Methods and devices that are suitable for use in conjunction with aspects of the preferred embodiments are disclosed in U.S. patent application Ser. No. 09/447,227 filed Nov. 22,

1999 and entitled "DEVICE AND METHOD FOR DETERMINING ANALYTE LEVELS"; U.S. patent application Ser. No. 11/654,135 filed Jan. 17, 2007 and entitled "POROUS MEMBRANES FOR USE WITH IMPLANTABLE DEVICES"; U.S. patent application Ser. No. 11/654,140 filed Jan. 17, 2007 and entitled "MEMBRANES FOR AN ANALYTE SENSOR"; U.S. patent application Ser. No. 11/543,490 filed Oct. 4, 2006 and entitled "ANALYTE SENSOR"; U.S. patent application Ser. No. 11/691,426 filed Mar. 26, 2007 and entitled "ANALYTE SENSOR"; U.S. patent application Ser. No. 12/037,830 filed Feb. 26, 2008 and entitled "ANALYTE MEASURING DEVICE"; U.S. patent application Ser. No. 12/037,812 filed Feb. 26, 2008 and entitled "ANALYTE MEASURING DEVICE"; U.S. patent application Ser. No. 12/102,654 filed Apr. 14, 2008 and entitled "SYSTEM AND METHODS FOR PROCESSING ANALYTE SENSOR DATA"; U.S. patent application Ser. No. 12/102,729 filed Apr. 14, 2008 and entitled "SYSTEM AND METHODS FOR PROCESSING ANALYTE SENSOR DATA"; U.S. patent application Ser. No. 12/102,745 filed Apr. 14, 2008 and entitled "SYSTEM AND METHODS FOR PROCESSING ANALYTE SENSOR DATA"; U.S. patent application Ser. No. 12/098,359 filed Apr. 4, 2008 and entitled "SYSTEM AND METHODS FOR PROCESSING ANALYTE SENSOR DATA"; U.S. patent application Ser. No. 12/098,353 filed Apr. 4, 2008 and entitled "SYSTEM AND METHODS FOR PROCESSING ANALYTE SENSOR DATA"; U.S. patent application Ser. No. 12/098,627 filed Apr. 7, 2008 and entitled "SYSTEM AND METHODS FOR PROCESSING ANALYTE SENSOR DATA"; U.S. patent application Ser. No. 12/103,594 filed Apr. 15, 2008 and entitled "BIOINTERFACE WITH MACRO-AND MICRO-ARCHITECTURE"; U.S. patent application Ser. No. 12/111,062 filed Apr. 28, 2008 and entitled "DUAL ELECTRODE SYSTEM FOR A CONTINUOUS ANALYTE SENSOR"; U.S. patent application Ser. No. 12/105,227 filed Apr. 17, 2008 and entitled "TRANSCUTANEOUS MEDICAL DEVICE WITH VARIABLE STIFFNESS"; U.S. patent application Ser. No. 12/101,810 filed Apr. 11, 2008 and entitled "TRANSCUTANEOUS ANALYTE SENSOR"; U.S. patent application Ser. No. 12/101,790 filed Apr. 11, 2008 and entitled "TRANSCUTANEOUS ANALYTE SENSOR"; U.S. patent application Ser. No. 12/101,806 filed Apr. 11, 2008 and entitled "TRANSCUTANEOUS ANALYTE SENSOR"; U.S. patent application Ser. No. 12/113,724 filed May 1, 2008 and entitled "LOW OXYGEN IN VIVO ANALYTE SENSOR"; U.S. patent application Ser. No. 12/113,508 filed May 1, 2008 and entitled "LOW OXYGEN IN VIVO ANALYTE SENSOR"; U.S. patent application Ser. No. 12/055,098 filed Mar. 25, 2008 and entitled "ANALYTE SENSOR"; U.S. patent application Ser. No. 12/054,953 filed Mar. 25, 2008 and entitled "ANALYTE SENSOR"; U.S. patent application Ser. No. 12/055,114 filed Mar. 25, 2008 and entitled "ANALYTE SENSOR"; U.S. patent application Ser. No. 12/055,078 filed Mar. 25, 2008 and entitled "ANALYTE SENSOR"; U.S. patent application Ser. No. 12/055,149 filed Mar. 25, 2008 and entitled "ANALYTE SENSOR"; U.S. patent application Ser. No. 12/055,203 filed Mar. 25, 2008 and entitled "ANALYTE SENSOR"; and U.S. patent application Ser. No. 12/055,227 filed Mar. 25, 2008 and entitled "ANALYTE SENSOR".

All references cited herein, including but not limited to published and unpublished applications, patents, and literature references, are incorporated herein by reference in their entirety and are hereby made a part of this specification. To the extent publications and patents or patent applications incorporated by reference contradict the disclosure contained in the specification, the specification is intended to supersede and/or take precedence over any such contradictory material.

The term "comprising" as used herein is synonymous with "including," "containing," or "characterized by," and is inclusive or open-ended and does not exclude additional, unrecited elements or method steps.

All numbers expressing quantities of ingredients, reaction conditions, and so forth used in the specification are to be understood as being modified in all instances by the term "about." Accordingly, unless indicated to the contrary, the numerical parameters set forth herein are approximations that may vary depending upon the desired properties sought to be obtained. At the very least, and not as an attempt to limit the application of the doctrine of equivalents to the scope of any claims in any application claiming priority to the present application, each numerical parameter should be construed in light of the number of significant digits and ordinary rounding approaches.

The above description discloses several methods and materials of the present invention. This invention is susceptible to modifications in the methods and materials, as well as alterations in the fabrication methods and equipment. Such modifications will become apparent to those skilled in the art from a consideration of this disclosure or practice of the invention disclosed herein. Consequently, it is not intended that this invention be limited to the specific embodiments disclosed herein, but that it cover all modifications and alternatives coming within the true scope and spirit of the invention.

What is claimed is:

1. A system for processing continuous glucose sensor data comprising:

one or more processors;

computer memory; and

computer-readable instructions stored in the computer memory, wherein the instructions are configured to cause at least one of the one or more processors, upon execution of the instructions, to:

process sensor data generated using a continuous glucose sensor and display a graphical representation of the processed sensor data on a display device, wherein the sensor data is indicative of a host's glucose concentration, and wherein the displaying includes graphing or charting the processed sensor data as a function of a time-related variable;

recommend a medicament therapy based at least in part on the processed sensor data; and

request additional data to validate the recommended medicament therapy to ensure safety or accuracy prior to medicament delivery, wherein the additional data is not generated using the continuous glucose sensor.

2. The system of claim **1**, wherein the processed sensor data includes glucose values averaged over a time period.

3. The system of claim **2**, wherein the time period is one of 1 day, 5 days, 7 days or 1 month.

4. The system of claim **1**, wherein the graphical representation includes a modal day graph.

5. The system of claim **1**, wherein the graphical representation includes a bar chart.

6. The system of claim **1**, wherein the graphical representation includes glucose trend data.

7. The system of claim **1**, wherein the time-related variable comprises mealtime(s) of the host.

8. The system of claim **1**, wherein the time-related variable comprises day(s) of the week.

9. The system of claim **1**, wherein the graphical representation is based on processed sensor data from two different time periods and includes a trend-related finding based on a comparison of the data from the two different time periods.

10. The system of claim **1**, wherein the medicament therapy is recommended based at least in part on a metabolic response of a host to medicament delivery.

11. The system of claim **1**, wherein the additional data is provided by the host or a caretaker via a user interface and in response to a request from the one or more processors.

12. The system of claim **1**, further configured to deliver medicament therapy only after additional data is received in response to the request.

13. The system of claim **1**, wherein the additional data comprises information that identifies the host.

14. The system of claim **1**, wherein the additional data comprises a time of day.

15. The system of claim **1**, wherein the additional data comprises a mealtime of the host.

16. The system of claim **1**, wherein the additional data comprises a sleep time of the host.

17. The system of claim **1**, wherein the additional data comprises a time of calorie intake of the host.

18. The system of claim **1**, wherein the additional data comprises a time of exercise of the host.

19. The system of claim **1**, wherein the additional data comprises a reference glucose value from a single-point glucose monitor.

20. The system of claim **1**, further comprising a device configured to deliver the recommended medicament therapy to the host.

* * * * *