US009773184B1

(12) **United States Patent**
Wilbert et al.

(10) **Patent No.: US 9,773,184 B1**
(45) **Date of Patent: Sep. 26, 2017**

(54) **METHOD AND APPARATUS FOR RECEIVING A BROADCAST RADIO SERVICE OFFER FROM AN IMAGE**

(71) Applicant: **Blinker, Inc.**, Denver, CO (US)

(72) Inventors: **Anthony Russell Wilbert**, Denver, CO (US); **Hans Brandon Wach**, Longmont, CO (US); **David Ching-Chien Chung**, San Francisco, CA (US)

(73) Assignee: **Blinker, Inc.**, Denver, CO (US)

(*) Notice: Subject to any disclaimer, the term of this patent is extended or adjusted under 35 U.S.C. 154(b) by 33 days.

(21) Appl. No.: **14/716,826**

(22) Filed: **May 19, 2015**

Related U.S. Application Data

(63) Continuation-in-part of application No. 14/318,397, filed on Jun. 27, 2014, now abandoned, and a continuation-in-part of application No. 14/455,841, filed on Aug. 8, 2014, now abandoned, and a continuation-in-part of application No. 14/613,323, filed on Feb. 3, 2015.

(51) **Int. Cl.**

G06K 9/00	(2006.01)
G06K 9/32	(2006.01)
G06T 11/60	(2006.01)
G06K 9/18	(2006.01)

(52) **U.S. Cl.**
CPC ***G06K 9/325*** (2013.01); ***G06K 9/18*** (2013.01); ***G06T 11/60*** (2013.01); *G06T 2210/22* (2013.01)

(58) **Field of Classification Search**
CPC combination set(s) only.
See application file for complete search history.

(56) **References Cited**

U.S. PATENT DOCUMENTS

3,544,771	A	12/1970	O'Meara
5,227,803	A	7/1993	O'Connor et al.
5,579,008	A	11/1996	Hulderman et al.
5,579,021	A	11/1996	Lee
5,651,075	A	7/1997	Frazier et al.
5,706,457	A	1/1998	Dwyer et al.

(Continued)

FOREIGN PATENT DOCUMENTS

CN	103985256	A	8/2014
CN	204303027	U	4/2015

(Continued)

OTHER PUBLICATIONS

US 7,970,635, 06/2011, Medina, III et al. (withdrawn)

(Continued)

Primary Examiner — Anand Bhatnagar
(74) *Attorney, Agent, or Firm* — Arent Fox LLP

(57) **ABSTRACT**

Some aspects of the invention relate to a mobile apparatus including an image sensor configured to convert an optical image into an electrical signal. The optical image includes an image of a vehicle license plate. The mobile apparatus includes a license plate detector configured to process the electrical signal to recover information from the vehicle license plate image. The mobile apparatus includes an interface configured to transmit the vehicle license plate information to a remote apparatus and receive a broadcast radio service offer corresponding to the vehicle license plate image in response to the transmission.

30 Claims, 22 Drawing Sheets

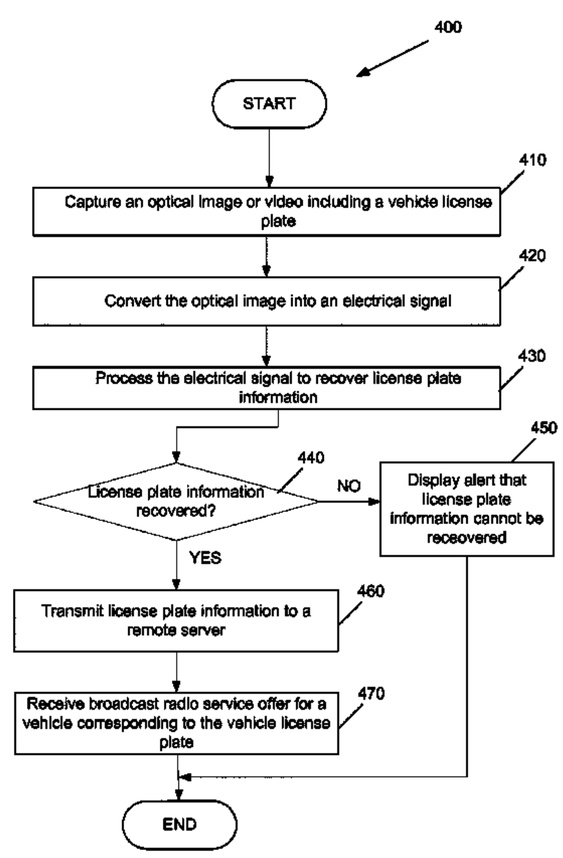

(56) **References Cited**

U.S. PATENT DOCUMENTS

5,708,425 A 1/1998 Dwyer et al.
5,734,337 A 3/1998 Kupersmit
5,864,306 A 1/1999 Dwyer et al.
5,963,253 A 10/1999 Dwyer
6,140,941 A 10/2000 Dwyer et al.
6,536,961 B1 3/2003 Gillies
6,571,279 B1 * 5/2003 Herz G06F 17/30867 707/999.01
6,622,131 B1 9/2003 Brown et al.
6,705,521 B1 3/2004 Wu et al.
6,814,284 B2 11/2004 Ehlers et al.
6,847,965 B2 1/2005 Walker et al.
6,922,156 B2 7/2005 Kavner
7,016,518 B2 3/2006 Vernon
7,046,169 B2 5/2006 Bucholz
7,053,792 B2 5/2006 Aoki et al.
7,076,349 B2 7/2006 Davidson et al.
7,104,447 B1 9/2006 Lopez et al.
7,124,006 B2 10/2006 Davidson et al.
7,136,828 B1 11/2006 Allen et al.
7,146,345 B2 12/2006 Weik, III et al.
7,171,049 B2 1/2007 Snapp
7,174,044 B2 2/2007 Ding et al.
7,253,946 B2 8/2007 Bellonard et al.
7,262,790 B2 8/2007 Bakewell
7,265,656 B2 9/2007 McMahon et al.
7,301,115 B2 11/2007 Elliot et al.
7,302,098 B2 11/2007 Tang et al.
7,319,379 B1 1/2008 Melvin
7,339,495 B2 3/2008 Kavner
7,346,222 B2 3/2008 Lee et al.
7,346,553 B2 3/2008 Barnett
7,347,368 B1 3/2008 Gravelle et al.
7,355,527 B2 4/2008 Franklin et al.
7,359,553 B1 4/2008 Wendt et al.
7,367,058 B2 4/2008 Lawson et al.
7,377,426 B1 5/2008 Makeever
7,407,097 B2 8/2008 Robinson et al.
7,412,078 B2 8/2008 Kim
7,424,968 B2 9/2008 Meyerhofer et al.
7,428,337 B2 9/2008 Gao et al.
7,433,764 B2 10/2008 Janssen
7,436,437 B2 10/2008 Fletcher et al.
7,439,847 B2 10/2008 Pederson
7,460,028 B2 12/2008 Garibotto et al.
7,482,910 B2 1/2009 Melvin
7,504,965 B1 3/2009 Windover et al.
7,522,766 B2 4/2009 Ishidera
7,539,331 B2 5/2009 Wendt et al.
7,542,588 B2 6/2009 Ekin et al.
7,579,965 B2 8/2009 Bucholz
7,583,858 B2 9/2009 Gallagher
7,630,515 B2 12/2009 Takahashi et al.
7,646,895 B2 1/2010 Haupt et al.
7,676,392 B2 3/2010 Hedley et al.
7,693,629 B2 4/2010 Kawasaki
7,710,452 B1 5/2010 Lindberg
7,711,150 B2 5/2010 Simon
7,714,705 B2 5/2010 Rennie et al.
7,725,348 B1 5/2010 Allen et al.
7,734,097 B1 6/2010 Porikli et al.
7,734,500 B1 6/2010 Allen et al.
7,738,706 B2 6/2010 Aradhye et al.
7,739,000 B2 6/2010 Kevaler
7,751,975 B2 7/2010 Allen et al.
7,774,228 B2 8/2010 Robinson et al.
7,778,447 B2 8/2010 Takahashi et al.
7,812,711 B2 10/2010 Brown et al.
7,813,581 B1 10/2010 Fitzpatrick et al.
7,860,344 B1 * 12/2010 Fitzpatrick G06K 9/3241 345/419
7,860,639 B2 12/2010 Yang
7,881,498 B2 2/2011 Simon
7,890,355 B2 2/2011 Gay et al.
7,893,963 B2 2/2011 Gallagher et al.
7,902,978 B2 3/2011 Pederson
7,908,237 B2 3/2011 Angell et al.
7,925,440 B2 4/2011 Allen et al.
7,933,455 B2 4/2011 Haupt et al.
7,970,644 B2 6/2011 Hedley et al.
1,987,103 A1 7/2011 Gay et al.
7,982,634 B2 7/2011 Arrighetti
7,991,629 B2 8/2011 Gay et al.
8,009,870 B2 8/2011 Simon
8,019,629 B1 9/2011 Medina, III et al.
8,044,824 B2 10/2011 Vu et al.
8,059,864 B2 11/2011 Huang et al.
8,089,340 B2 1/2012 Cochran et al.
8,094,887 B2 1/2012 Axemo et al.
8,107,677 B2 1/2012 Angell et al.
8,120,473 B2 2/2012 Rennie et al.
RE43,245 E 3/2012 Ouimet et al.
8,155,384 B2 4/2012 Chew
8,175,917 B2 5/2012 Flynn et al.
8,203,425 B1 6/2012 Medina, III et al.
8,218,822 B2 7/2012 Sefton
8,218,871 B2 7/2012 Angell et al.
8,229,168 B2 7/2012 Geva et al.
8,229,171 B2 7/2012 Takahashi et al.
8,238,610 B2 8/2012 Shah et al.
8,254,631 B2 8/2012 Bongard
8,260,002 B2 9/2012 Almbladh
8,260,639 B1 9/2012 Medina, III et al.
8,265,963 B1 9/2012 Hanson et al.
8,265,988 B2 9/2012 Hedley et al.
8,279,088 B2 10/2012 Khim
8,284,037 B2 10/2012 Rennie et al.
8,284,996 B2 10/2012 Winkler
8,290,213 B2 10/2012 Chen et al.
8,307,037 B2 11/2012 Bain et al.
8,311,856 B1 11/2012 Hanson et al.
8,321,264 B2 11/2012 Goldmann et al.
8,330,769 B2 12/2012 Moore et al.
8,331,621 B1 12/2012 Allen et al.
8,345,921 B1 1/2013 Frome et al.
8,346,578 B1 1/2013 Hopkins, III et al.
8,364,439 B2 1/2013 Mintz et al.
8,369,653 B1 2/2013 Cohen
8,380,389 B2 2/2013 Wright et al.
8,384,560 B2 2/2013 Malarky
8,401,327 B2 3/2013 Almbladh
8,401,343 B2 3/2013 Braun
8,411,992 B2 4/2013 Hamada et al.
8,417,035 B2 4/2013 Angell et al.
8,437,551 B2 5/2013 Noonan et al.
8,441,535 B2 5/2013 Morin
8,447,112 B2 5/2013 Paul et al.
8,457,408 B2 * 6/2013 Challa G06K 9/3258 382/105
8,463,642 B2 6/2013 Hedley et al.
8,473,332 B2 6/2013 Robinson et al.
8,473,333 B2 6/2013 Robinson et al.
8,478,480 B2 7/2013 Mian et al.
8,493,216 B2 7/2013 Angell et al.
8,497,769 B2 7/2013 Rennie et al.
8,502,698 B2 8/2013 Chen et al.
8,504,415 B2 8/2013 Hedley
8,508,341 B2 8/2013 Kohli et al.
8,527,305 B1 9/2013 Hanson et al.
8,543,285 B2 9/2013 Allen et al.
8,548,201 B2 10/2013 Yoon et al.
8,571,751 B1 10/2013 Blair
8,571,895 B1 10/2013 Medina, III et al.
8,577,184 B2 11/2013 Young
8,577,344 B2 11/2013 Kobylarz
8,581,922 B2 11/2013 Moore et al.
8,582,832 B2 11/2013 Angell et al.
8,587,454 B1 11/2013 Dearworth
8,588,470 B2 11/2013 Rodriguez Serrano et al.
8,593,521 B2 11/2013 Schofield et al.
8,625,853 B2 1/2014 Carbonell et al.
8,629,755 B2 1/2014 Hashim-Waris
8,630,497 B2 1/2014 Badawy et al.
8,637,801 B2 1/2014 Schofield et al.

(56) **References Cited**

U.S. PATENT DOCUMENTS

8,639,433 B2 1/2014 Meis et al.
8,660,890 B2 2/2014 Hedley
8,665,079 B2 3/2014 Pawlicki et al.
8,666,196 B2 3/2014 Young
8,682,066 B2 3/2014 Milgrom et al.
8,693,733 B1 * 4/2014 Harrison G06Q 30/0271 382/105
8,694,341 B1 4/2014 Hanson et al.
8,698,895 B2 4/2014 Nerayoff et al.
8,704,682 B1 4/2014 Chau
8,704,889 B2 4/2014 Hofman
8,704,948 B2 4/2014 Mountain
8,712,630 B2 4/2014 Walwer
8,712,803 B1 4/2014 Buentello
8,712,806 B1 4/2014 Medina, III et al.
8,713,121 B1 4/2014 Bain et al.
8,725,542 B1 5/2014 Hanson et al.
8,725,543 B1 5/2014 Hanson et al.
8,730,066 B2 5/2014 Malarky
8,731,244 B2 5/2014 Wu
8,744,905 B2 6/2014 Robinson et al.
8,751,099 B2 6/2014 Blair
8,751,270 B1 6/2014 Hanson et al.
8,751,391 B2 6/2014 Freund
8,760,316 B2 6/2014 Kohli et al.
8,761,446 B1 6/2014 Frome et al.
8,768,009 B1 7/2014 Smith
8,768,753 B2 7/2014 Robinson et al.
8,768,754 B2 7/2014 Robinson et al.
8,773,266 B2 7/2014 Starr et al.
8,774,462 B2 7/2014 Kozitsky et al.
8,774,465 B2 * 7/2014 Christopulos G06K 9/00671 382/104
8,775,236 B2 7/2014 Hedley et al.
8,775,238 B2 7/2014 Angell et al.
8,781,172 B2 7/2014 Kozitsky et al.
8,788,300 B1 7/2014 Hanson et al.
8,792,677 B2 7/2014 Kephart
8,792,682 B2 7/2014 Fan et al.
8,799,034 B1 8/2014 Brandmaier et al.
8,799,036 B1 8/2014 Christensen et al.
8,818,042 B2 8/2014 Schofield et al.
8,825,271 B2 9/2014 Chen
8,825,368 B2 9/2014 Rakshit
8,831,970 B2 9/2014 Weik, III et al.
8,831,972 B2 9/2014 Angell et al.
8,837,830 B2 9/2014 Bala et al.
8,855,621 B2 10/2014 Chen
8,855,853 B2 10/2014 Blair
8,860,564 B2 10/2014 Rubin et al.
8,862,117 B2 10/2014 Chen
8,879,120 B2 11/2014 Thrasher et al.
8,879,846 B2 11/2014 Amtrup et al.
8,884,782 B2 11/2014 Rubin et al.
8,885,229 B1 11/2014 Amtrup et al.
8,897,820 B2 11/2014 Marovets
8,917,910 B2 12/2014 Rodriguez Serrano
8,922,391 B2 12/2014 Rubin et al.
8,924,851 B2 12/2014 Wichmann
8,934,676 B2 1/2015 Burry et al.
8,935,094 B2 1/2015 Rubin et al.
8,937,559 B2 1/2015 Ioli
8,953,846 B2 2/2015 Wu et al.
8,954,226 B1 2/2015 Binion et al.
8,957,759 B1 2/2015 Medina, III et al.
8,958,605 B2 2/2015 Amtrup et al.
8,958,630 B1 2/2015 Gallup et al.
8,971,582 B2 3/2015 Dehart
8,971,587 B2 3/2015 Macciola et al.
8,982,208 B2 3/2015 Takeuchi et al.
8,989,515 B2 3/2015 Shustorovich et al.
8,993,951 B2 3/2015 Schofield et al.
9,004,353 B1 4/2015 Block et al.
9,008,369 B2 4/2015 Schofield et al.
9,008,370 B2 4/2015 Burry et al.
9,008,958 B2 4/2015 Rubin et al.
9,014,429 B2 4/2015 Badawy et al.
9,014,432 B2 4/2015 Fan et al.
9,014,908 B2 4/2015 Chen et al.
9,019,092 B1 4/2015 Brandmaier et al.
9,020,657 B2 * 4/2015 Uhler H04W 4/021 340/902
9,020,837 B1 4/2015 Oakes, III et al.
9,021,384 B1 4/2015 Beard et al.
9,031,858 B2 5/2015 Angell et al.
9,031,948 B1 5/2015 Smith
9,035,755 B2 5/2015 Rennie et al.
9,058,515 B1 6/2015 Amtrup et al.
9,058,580 B1 6/2015 Amtrup et al.
9,092,808 B2 7/2015 Angell et al.
9,092,979 B2 7/2015 Burry et al.
9,105,066 B2 8/2015 Gay et al.
9,111,331 B2 8/2015 Parikh et al.
9,118,872 B1 8/2015 Goodman et al.
9,123,034 B2 9/2015 Rydbeck et al.
9,129,159 B2 9/2015 Cardoso et al.
9,129,289 B2 9/2015 Vaughn et al.
9,137,417 B2 9/2015 Macciola et al.
9,141,112 B1 9/2015 Loo et al.
9,141,503 B1 9/2015 Chen
9,141,926 B2 9/2015 Kilby et al.
9,158,967 B2 10/2015 Shustorovich et al.
9,165,187 B2 10/2015 Macciola et al.
9,165,188 B2 10/2015 Thrasher et al.
9,177,211 B2 11/2015 Lehning
9,208,536 B2 12/2015 Macciola et al.
9,223,769 B2 12/2015 Tsibulevskiy et al.
9,223,893 B2 12/2015 Rodriguez
9,235,599 B1 1/2016 Smith
9,253,349 B2 2/2016 Amtrup et al.
9,311,531 B2 4/2016 Amtrup et al.
9,365,188 B1 * 6/2016 Penilla B60R 25/2018
9,384,423 B2 * 7/2016 Rodriguez-Serrano .. G06K 9/72
2001/0034768 A1 10/2001 Bain et al.
2002/0000920 A1 1/2002 Kavner
2002/0140577 A1 10/2002 Kavner
2003/0146839 A1 8/2003 Ehlers et al.
2004/0039690 A1 2/2004 Brown et al.
2006/0015394 A1 1/2006 Sorensen
2006/0056658 A1 3/2006 Kavner
2006/0059229 A1 3/2006 Bain et al.
2006/0069749 A1 * 3/2006 Herz G06F 17/30867 709/219
2006/0078215 A1 4/2006 Gallagher
2006/0095301 A1 5/2006 Gay
2006/0109104 A1 5/2006 Kevaler
2006/0159345 A1 7/2006 Clary et al.
2006/0215882 A1 9/2006 Ando et al.
2006/0222244 A1 10/2006 Haupt et al.
2006/0269104 A1 11/2006 Ciolli
2006/0269105 A1 11/2006 Langlinais
2006/0278705 A1 12/2006 Hedley et al.
2006/0287872 A1 12/2006 Simrell
2007/0009136 A1 1/2007 Pawlenko et al.
2007/0016539 A1 1/2007 Groft et al.
2007/0058856 A1 3/2007 Boregowda et al.
2007/0058863 A1 3/2007 Boregowda et al.
2007/0061173 A1 3/2007 Gay
2007/0085704 A1 4/2007 Long
2007/0088624 A1 4/2007 Vaughn et al.
2007/0106539 A1 5/2007 Gay
2007/0124198 A1 5/2007 Robinson et al.
2007/0130016 A1 6/2007 Walker et al.
2007/0183688 A1 8/2007 Hollfelder
2007/0192177 A1 8/2007 Robinson et al.
2007/0208681 A1 9/2007 Bucholz
2007/0252724 A1 * 11/2007 Donaghey G01D 4/004 340/905
2007/0265872 A1 11/2007 Robinson et al.
2007/0288270 A1 12/2007 Gay et al.
2007/0294147 A1 12/2007 Dawson et al.
2007/0299700 A1 12/2007 Gay et al.
2008/0036623 A1 2/2008 Rosen
2008/0040210 A1 2/2008 Hedley

(56) **References Cited**

U.S. PATENT DOCUMENTS

2008/0063280 A1 3/2008 Hofman et al.
2008/0077312 A1 3/2008 Mrotek
2008/0120172 A1 5/2008 Robinson et al.
2008/0137910 A1 6/2008 Suzuki et al.
2008/0166018 A1 7/2008 Li et al.
2008/0175438 A1 7/2008 Alves
2008/0175479 A1 7/2008 Sefton et al.
2008/0212837 A1 9/2008 Matsumoto et al.
2008/0221916 A1 9/2008 Reeves et al.
2008/0249857 A1 10/2008 Angell et al.
2008/0253616 A1 10/2008 Mizuno et al.
2008/0277468 A1 11/2008 Mitschele
2008/0285803 A1 11/2008 Madsen
2008/0285804 A1 11/2008 Sefton
2008/0319837 A1 12/2008 Mitschele
2009/0005650 A1 1/2009 Angell et al.
2009/0006125 A1 1/2009 Angell et al.
2009/0016819 A1 1/2009 Vu et al.
2009/0018721 A1 1/2009 Mian et al.
2009/0018902 A1 1/2009 Miller et al.
2009/0024493 A1 1/2009 Huang et al.
2009/0070156 A1 3/2009 Cleland-Pottie
2009/0070163 A1 3/2009 Angell et al.
2009/0083121 A1 3/2009 Angell et al.
2009/0083122 A1 3/2009 Angell et al.
2009/0089107 A1 4/2009 Angell et al.
2009/0089108 A1 4/2009 Angell et al.
2009/0110300 A1 4/2009 Kihara et al.
2009/0136141 A1 5/2009 Badawy et al.
2009/0138344 A1 5/2009 Dawson et al.
2009/0138345 A1 5/2009 Dawson et al.
2009/0161913 A1 6/2009 Son
2009/0167865 A1 7/2009 Jones, Jr.
2009/0174777 A1 7/2009 Smith
2009/0202105 A1 8/2009 Castro Abrantes et al.
2009/0208060 A1 8/2009 Wang et al.
2009/0226100 A1 9/2009 Gao et al.
2009/0232357 A1 9/2009 Angell et al.
2009/0292597 A1 11/2009 Schwartz et al.
2009/0307158 A1 12/2009 Kim et al.
2010/0054546 A1 3/2010 Choi
2010/0064305 A1 3/2010 Schumann et al.
2010/0082180 A1 4/2010 Wright et al.
2010/0085173 A1 4/2010 Yang et al.
2010/0088123 A1 4/2010 Mccall et al.
2010/0111365 A1 5/2010 Dixon et al.
2010/0128127 A1 5/2010 Ciolli
2010/0150457 A1 6/2010 Angell et al.
2010/0153146 A1 6/2010 Angell et al.
2010/0153147 A1 6/2010 Angell et al.
2010/0153180 A1 6/2010 Angell et al.
2010/0153279 A1 6/2010 Zahn
2010/0153353 A1 6/2010 Angell et al.
2010/0179878 A1 7/2010 Dawson et al.
2010/0189364 A1 7/2010 Tsai et al.
2010/0191584 A1 7/2010 Fraser et al.
2010/0228607 A1 9/2010 Hedley et al.
2010/0228608 A1 9/2010 Hedley et al.
2010/0229247 A1 9/2010 Phipps
2010/0232680 A1 9/2010 Kleihorst
2010/0246890 A1 9/2010 Ofek et al.
2010/0272317 A1 10/2010 Riesco Prieto et al.
2010/0272364 A1 10/2010 Lee et al.
2010/0274641 A1 10/2010 Allen et al.
2010/0278389 A1 11/2010 Tsai et al.
2010/0278436 A1 11/2010 Tsai et al.
2010/0299021 A1 11/2010 Jalili
2010/0302362 A1 12/2010 Birchbauer et al.
2011/0047009 A1 2/2011 Deitiker et al.
2011/0096991 A1 4/2011 Lee et al.
2011/0115917 A1 5/2011 Lee et al.
2011/0116686 A1 5/2011 Gravelle
2011/0118967 A1 5/2011 Tsuda
2011/0145053 A1 6/2011 Hashim-Waris
2011/0161140 A1 6/2011 Polt et al.
2011/0169953 A1 7/2011 Sandler et al.
2011/0191117 A1 8/2011 Hashim-Waris
2011/0194733 A1 8/2011 Wilson
2011/0208568 A1 8/2011 Deitiker et al.
2011/0218896 A1 9/2011 Tonnon et al.
2011/0224865 A1 9/2011 Gordon et al.
2011/0234749 A1 9/2011 Alon
2011/0235864 A1 9/2011 Shimizu
2011/0238290 A1 9/2011 Feng et al.
2011/0261200 A1 10/2011 Kanning et al.
2012/0007983 A1 1/2012 Welch
2012/0033123 A1 2/2012 Inoue et al.
2012/0069183 A1 3/2012 Aoki et al.
2012/0070086 A1 3/2012 Miyamoto
2012/0078686 A1 3/2012 Bashani
2012/0089462 A1* 4/2012 Hot G06Q 30/0241 705/14.62
2012/0089675 A1 4/2012 Thrower, III et al.
2012/0106781 A1 5/2012 Kozitsky et al.
2012/0106801 A1 5/2012 Jackson
2012/0106802 A1 5/2012 Hsieh et al.
2012/0116661 A1 5/2012 Mizrachi
2012/0128205 A1 5/2012 Lee et al.
2012/0130777 A1 5/2012 Kaufman
2012/0130872 A1 5/2012 Baughman et al.
2012/0140067 A1 6/2012 Crossen
2012/0143657 A1 6/2012 Silberberg
2012/0148092 A1 6/2012 Ni et al.
2012/0158466 A1 6/2012 John
2012/0170814 A1 7/2012 Tseng
2012/0195470 A1 8/2012 Fleming et al.
2012/0215594 A1 8/2012 Gravelle
2012/0223134 A1 9/2012 Smith et al.
2012/0246007 A1 9/2012 Williams et al.
2012/0258731 A1 10/2012 Smith et al.
2012/0263352 A1 10/2012 Fan et al.
2012/0265574 A1 10/2012 Olding et al.
2012/0275653 A1 11/2012 Hsieh et al.
2012/0310712 A1 12/2012 Baughman et al.
2013/0004024 A1 1/2013 Challa
2013/0010116 A1 1/2013 Breed
2013/0018705 A1 1/2013 Heath et al.
2013/0039542 A1 2/2013 Guzik
2013/0041961 A1 2/2013 Thrower, III et al.
2013/0046587 A1 2/2013 Fraser et al.
2013/0050493 A1 2/2013 Mitic
2013/0058523 A1 3/2013 Wu et al.
2013/0066667 A1 3/2013 Gulec et al.
2013/0066757 A1 3/2013 Lovelace et al.
2013/0073347 A1 3/2013 Bogaard et al.
2013/0077888 A1 3/2013 Meyers et al.
2013/0080345 A1 3/2013 Rassi
2013/0084010 A1 4/2013 Ross et al.
2013/0097630 A1 4/2013 Rodriguez
2013/0108114 A1 5/2013 Aviad et al.
2013/0113936 A1 5/2013 Cohen et al.
2013/0121581 A1 5/2013 Wei et al.
2013/0129152 A1 5/2013 Rodriguez Serrano et al.
2013/0132166 A1 5/2013 Wu et al.
2013/0136310 A1 5/2013 Hofman et al.
2013/0144492 A1 6/2013 Takano et al.
2013/0148846 A1 6/2013 Maeda et al.
2013/0148858 A1 6/2013 Wiegenfeld et al.
2013/0158777 A1 6/2013 Brauer et al.
2013/0162817 A1 6/2013 Bernal
2013/0163822 A1 6/2013 Chigos et al.
2013/0163823 A1 6/2013 Chigos et al.
2013/0166325 A1 6/2013 Ganapathy et al.
2013/0170711 A1 7/2013 Chigos et al.
2013/0173481 A1 7/2013 Hirtenstein et al.
2013/0182910 A1 7/2013 Burry et al.
2013/0204719 A1 8/2013 Burry et al.
2013/0216101 A1 8/2013 Wu et al.
2013/0216102 A1 8/2013 Ryan et al.
2013/0238167 A1 9/2013 Stanfield et al.
2013/0238441 A1 9/2013 Panelli
2013/0242123 A1 9/2013 Norman et al.
2013/0243334 A1 9/2013 Meyers et al.
2013/0246132 A1 9/2013 Buie

(56) **References Cited**

U.S. PATENT DOCUMENTS

2013/0253997 A1 9/2013 Robinson et al.
2013/0262194 A1 10/2013 Hedley
2013/0265414 A1 10/2013 Yoon et al.
2013/0266190 A1 10/2013 Wang et al.
2013/0268155 A1 10/2013 Mian et al.
2013/0272579 A1 10/2013 Burry et al.
2013/0272580 A1 10/2013 Karel et al.
2013/0278761 A1 10/2013 Wu
2013/0279748 A1 10/2013 Hastings
2013/0279758 A1 10/2013 Burry et al.
2013/0279759 A1 10/2013 Kagarlitsky et al.
2013/0282271 A1 10/2013 Rubin et al.
2013/0290201 A1 10/2013 Rodriguez Carrillo
2013/0294643 A1 11/2013 Fan et al.
2013/0294653 A1 11/2013 Burry et al.
2013/0317693 A1 11/2013 Jefferies et al.
2013/0325629 A1 12/2013 Harrison
2013/0329943 A1 12/2013 Christopulos et al.
2013/0329961 A1 12/2013 Fan et al.
2013/0336538 A1 12/2013 Skaff et al.
2014/0003712 A1 1/2014 Eid et al.
2014/0025444 A1 1/2014 Willis
2014/0029839 A1 1/2014 Mensink et al.
2014/0029850 A1 1/2014 Meyers et al.
2014/0037142 A1 2/2014 Bhanu et al.
2014/0039987 A1 2/2014 Nerayoff et al.
2014/0046800 A1* 2/2014 Chen G06Q 30/0623 705/26.61
2014/0056483 A1 2/2014 Angell et al.
2014/0056520 A1 2/2014 Rodriguez Serrano
2014/0064564 A1 3/2014 Hofman et al.
2014/0072178 A1 3/2014 Carbonell et al.
2014/0074566 A1 3/2014 Mccoy et al.
2014/0074567 A1 3/2014 Hedley et al.
2014/0078304 A1 3/2014 Othmer
2014/0079315 A1 3/2014 Kozitsky et al.
2014/0081858 A1 3/2014 Block et al.
2014/0085475 A1 3/2014 Bhanu et al.
2014/0119651 A1 5/2014 Meyers et al.
2014/0126779 A1 5/2014 Duda
2014/0129440 A1 5/2014 Smith et al.
2014/0136047 A1 5/2014 Mian et al.
2014/0140578 A1 5/2014 Ziola et al.
2014/0149190 A1 5/2014 Robinson et al.
2014/0168436 A1 6/2014 Pedicino
2014/0169633 A1 6/2014 Seyfried et al.
2014/0169634 A1 6/2014 Prakash et al.
2014/0172519 A1 6/2014 Nerayoff et al.
2014/0172520 A1 6/2014 Nerayoff et al.
2014/0188579 A1 7/2014 Regan, III et al.
2014/0188580 A1 7/2014 Nerayoff et al.
2014/0195099 A1 7/2014 Chen
2014/0195138 A1 7/2014 Stelzig et al.
2014/0195313 A1 7/2014 Nerayoff et al.
2014/0200970 A1 7/2014 Nerayoff et al.
2014/0201064 A1 7/2014 Jackson et al.
2014/0201213 A1 7/2014 Jackson et al.
2014/0201266 A1 7/2014 Jackson et al.
2014/0207541 A1 7/2014 Nerayoff et al.
2014/0214499 A1 7/2014 Hudson et al.
2014/0214500 A1 7/2014 Hudson et al.
2014/0219563 A1 8/2014 Rodriguez-Serrano et al.
2014/0236786 A1 8/2014 Nerayoff et al.
2014/0241578 A1 8/2014 Nonaka et al.
2014/0241579 A1 8/2014 Nonaka
2014/0244366 A1 8/2014 Nerayoff et al.
2014/0247347 A1 9/2014 Mcneill et al.
2014/0247372 A1 9/2014 Byren
2014/0249896 A1 9/2014 Nerayoff et al.
2014/0254866 A1 9/2014 Jankowski et al.
2014/0254877 A1 9/2014 Jankowski et al.
2014/0254878 A1 9/2014 Jankowski et al.
2014/0254879 A1 9/2014 Smith
2014/0257942 A1 9/2014 Nerayoff et al.
2014/0257943 A1 9/2014 Nerayoff et al.
2014/0270350 A1 9/2014 Rodriguez-Serrano et al.
2014/0270383 A1 9/2014 Pederson
2014/0270386 A1 9/2014 Leihs et al.
2014/0278839 A1 9/2014 Lynam et al.
2014/0278841 A1 9/2014 Natinsky
2014/0289024 A1 9/2014 Robinson et al.
2014/0294257 A1 10/2014 Tussy
2014/0301606 A1 10/2014 Paul et al.
2014/0307923 A1 10/2014 Johansson
2014/0307924 A1 10/2014 Fillion et al.
2014/0309842 A1 10/2014 Jefferies et al.
2014/0310028 A1 10/2014 Christensen et al.
2014/0314275 A1 10/2014 Edmondson et al.
2014/0316841 A1 10/2014 Kilby et al.
2014/0324247 A1 10/2014 Jun
2014/0328518 A1 11/2014 Kozitsky et al.
2014/0334668 A1 11/2014 Saund
2014/0336848 A1 11/2014 Saund et al.
2014/0337066 A1 11/2014 Kephart
2014/0337319 A1 11/2014 Chen
2014/0337756 A1 11/2014 Thrower et al.
2014/0340570 A1 11/2014 Meyers et al.
2014/0348391 A1 11/2014 Schweid et al.
2014/0348392 A1 11/2014 Burry et al.
2014/0355835 A1 12/2014 Rodriguez-Serrano et al.
2014/0355836 A1 12/2014 Kozitsky et al.
2014/0355837 A1 12/2014 Hedley et al.
2014/0363051 A1 12/2014 Burry et al.
2014/0363052 A1 12/2014 Kozitsky et al.
2014/0369566 A1 12/2014 Chigos et al.
2014/0369567 A1 12/2014 Chigos et al.
2014/0376778 A1 12/2014 Muetzel et al.
2014/0379384 A1 12/2014 Duncan et al.
2014/0379385 A1 12/2014 Duncan et al.
2014/0379442 A1 12/2014 Dutta et al.
2015/0012309 A1 1/2015 Buchheim et al.
2015/0019533 A1 1/2015 Moody et al.
2015/0025932 A1 1/2015 Ross et al.
2015/0032580 A1 1/2015 Altermatt et al.
2015/0041536 A1 2/2015 Matsur
2015/0049914 A1 2/2015 Alves
2015/0051822 A1 2/2015 Joglekar
2015/0051823 A1 2/2015 Joglekar
2015/0052022 A1 2/2015 Christy et al.
2015/0054950 A1 2/2015 Van Wiemeersch
2015/0058210 A1 2/2015 Johnson, II et al.
2015/0066349 A1 3/2015 Chan et al.
2015/0066605 A1 3/2015 Balachandran et al.
2015/0081362 A1 3/2015 Chadwick et al.
2015/0095251 A1 4/2015 Alazraki et al.
2015/0100448 A1 4/2015 Binion et al.
2015/0100504 A1 4/2015 Binion et al.
2015/0100505 A1 4/2015 Binion et al.
2015/0100506 A1 4/2015 Binion et al.
2015/0104073 A1 4/2015 Rodriguez-Serrano et al.
2015/0112504 A1 4/2015 Binion et al.
2015/0112543 A1 4/2015 Binion et al.
2015/0112545 A1 4/2015 Binion et al.
2015/0112730 A1 4/2015 Binion et al.
2015/0112731 A1 4/2015 Binion et al.
2015/0112800 A1 4/2015 Binion et al.
2015/0120334 A1 4/2015 Jones
2015/0125041 A1 5/2015 Burry et al.
2015/0127730 A1 5/2015 Aviv
2015/0149221 A1 5/2015 Tremblay
2015/0154578 A1 6/2015 Aggarwal et al.
2015/0205760 A1 7/2015 Hershey et al.
2015/0206357 A1 7/2015 Chen et al.
2015/0221041 A1 8/2015 Hanson et al.
2015/0222573 A1 8/2015 Bain et al.
2015/0249635 A1 9/2015 Thrower, III et al.
2015/0254781 A1 9/2015 Binion et al.
2015/0269433 A1 9/2015 Amtrup et al.
2015/0310293 A1 10/2015 Dehart
2015/0324924 A1 11/2015 Wilson et al.

(56) **References Cited**

U.S. PATENT DOCUMENTS

2015/0332407	A1	11/2015	Wilson, II et al.
2016/0036899	A1	2/2016	Moody et al.

FOREIGN PATENT DOCUMENTS

HU	0302998	A2	12/2003
JP	10134219		11/1996
JP	4243411	B2	3/2009
WO	0169569	A2	9/2001
WO	02059852	A3	1/2002
WO	02059838	A2	8/2002
WO	02059852	A2	8/2002
WO	2013138186	A1	3/2013
WO	2014158291	A2	10/2014
WO	2014160426	A1	10/2014

OTHER PUBLICATIONS

Carfax, Inc., "Find Used Cars for Sale," iTunes App, updated as of Feb. 18, 2016.

Carfax, Inc., "Vehicle History Report," Mobile App, CARFAX Blog dated Aug. 27, 2012.

Brandon Turkus, re: DiDi Plate App Report dated Jun. 13, 2014.

Jason Hahn, "Scan License Plates So You Can Text Flirty Messages to Cute Drivers with GM's New App," digitaltrends.com (http://www.digitaltrends.com/cars/scan-license-plate-text-drivers-gm-didi-plate-app/) dated Jun. 21, 2014.

Progressive, "Progressive's Image Capture technology saves users time, helps drivers quote and buy auto insurance using their smartphone camera," Mayfield Village, Ohio—Feb. 2, 2012.

Don Jergler, "There's an App for That: Mobile Phone Quoting," Insurance Journal, http://www.insurancejournal.com/news/national/2012Al2/21/236521.htm, dated Feb. 21, 2012.

Vimeo, LLC, online presentation for Five Focal's engineering service offering titled "Test and Validation," website location https://vimeo.com/85556043, date site last visited Aug. 24, 2015.

Arayanswamy, Ramkumar; Johnson, Gregory E.; Silveira, Paulo E. X.; Wach, Hans B., article titled Extending the Imaging Volume for Biometric Iris Recognition, published Feb. 2005 in Applied Optics IP, vol. 44, Issue 5, pp. 701-712, website location http://adsabs.harvard.edu/abs/2005ApOpt . . . 44 . . . 701N.

Non-Final Office Action dated Mar. 9, 2017 in U.S. Appl. No. 14/716,810.

* cited by examiner

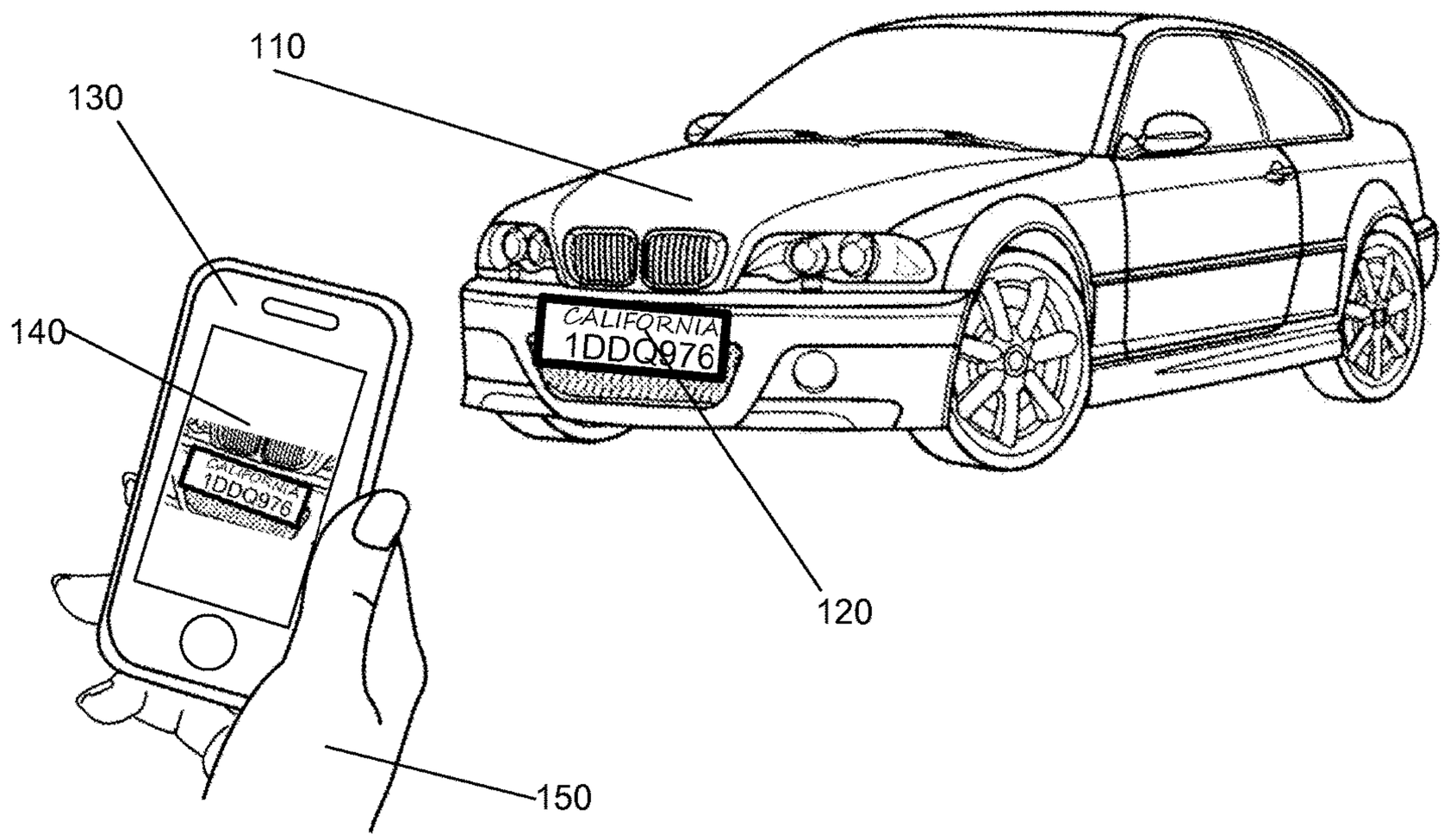
110
130
140
150
120
CALIFORNIA
1DDQ976

FIG. 1

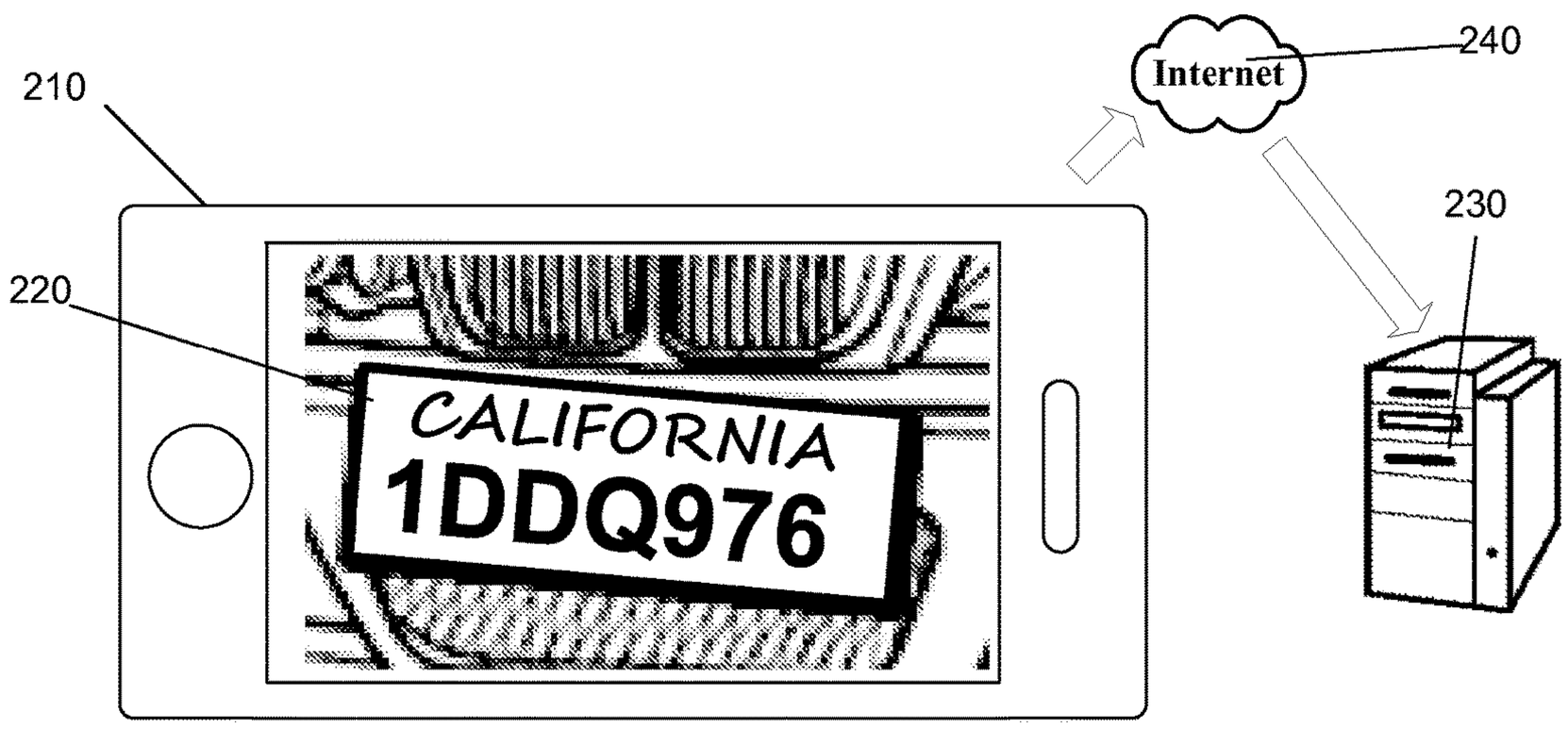
210
220
240
230
Internet
CALIFORNIA
1DDQ976

FIG. 2

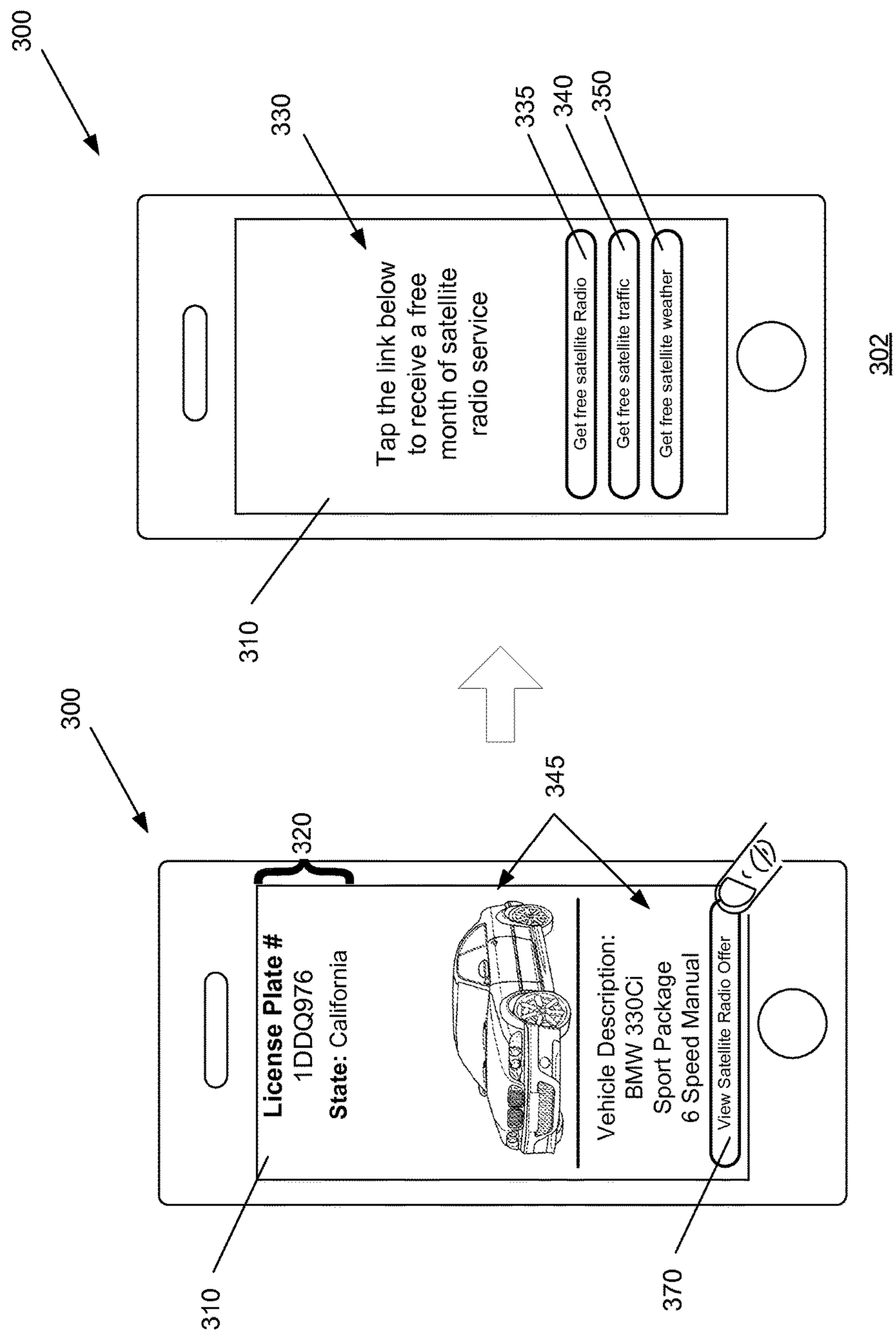
300
330
335
340
350
Tap the link below to receive a free month of satellite radio service
Get free satellite Radio
Get free satellite traffic
Get free satellite weather
302
310
300
320
345
License Plate #
1DDQ976
State: California
Vehicle Description:
BMW 330Ci
Sport Package
6 Speed Manual
View Satellite Radio Offer
310
370
301

FIG. 3

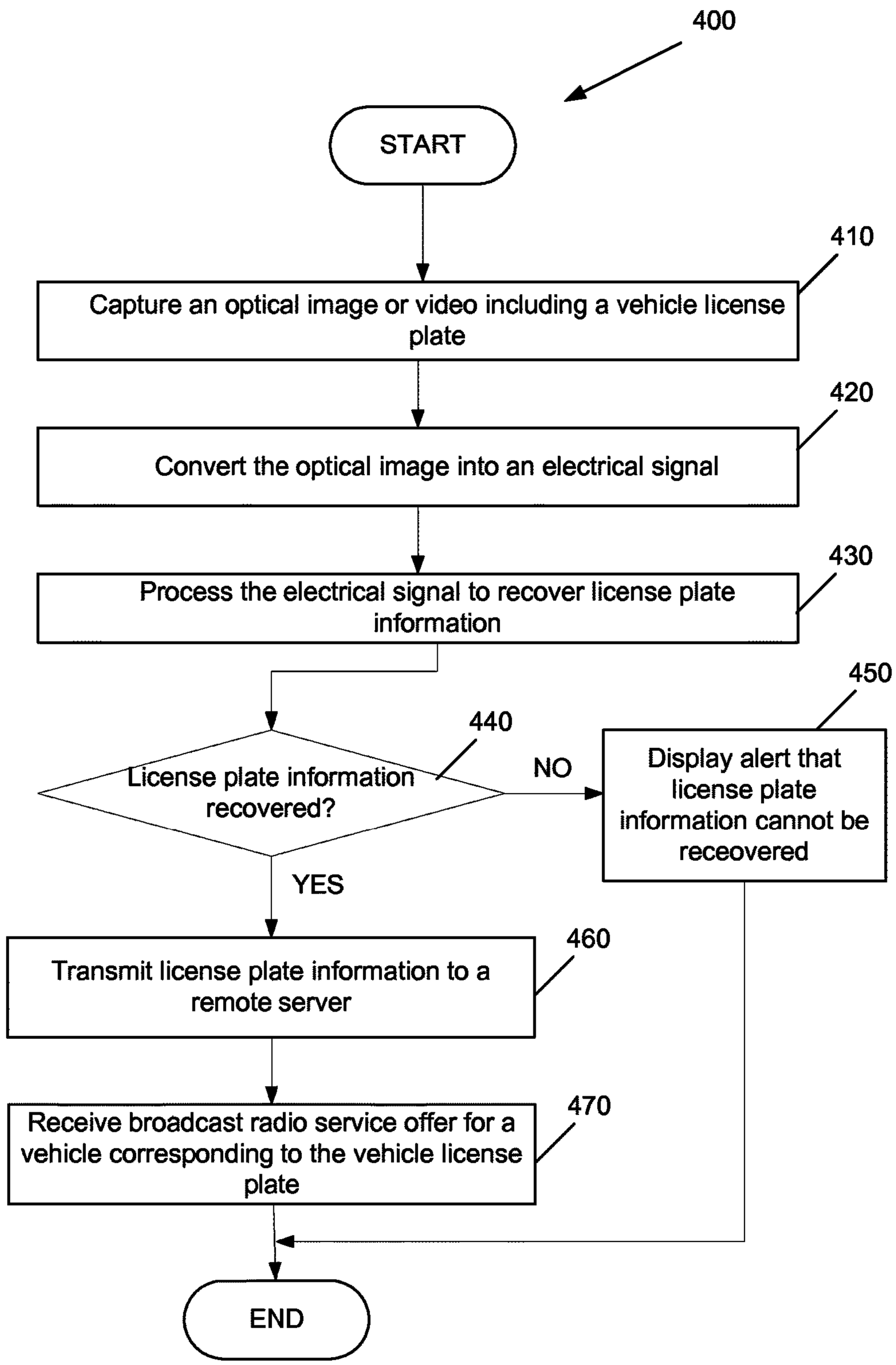
400
START
410
Capture an optical image or video including a vehicle license plate
420
Convert the optical image into an electrical signal
430
Process the electrical signal to recover license plate information
440
License plate information recovered?
NO
450
Display alert that license plate information cannot be receovered
YES
460
Transmit license plate information to a remote server
470
Receive broadcast radio service offer for a vehicle corresponding to the vehicle license plate
END

FIG. 4

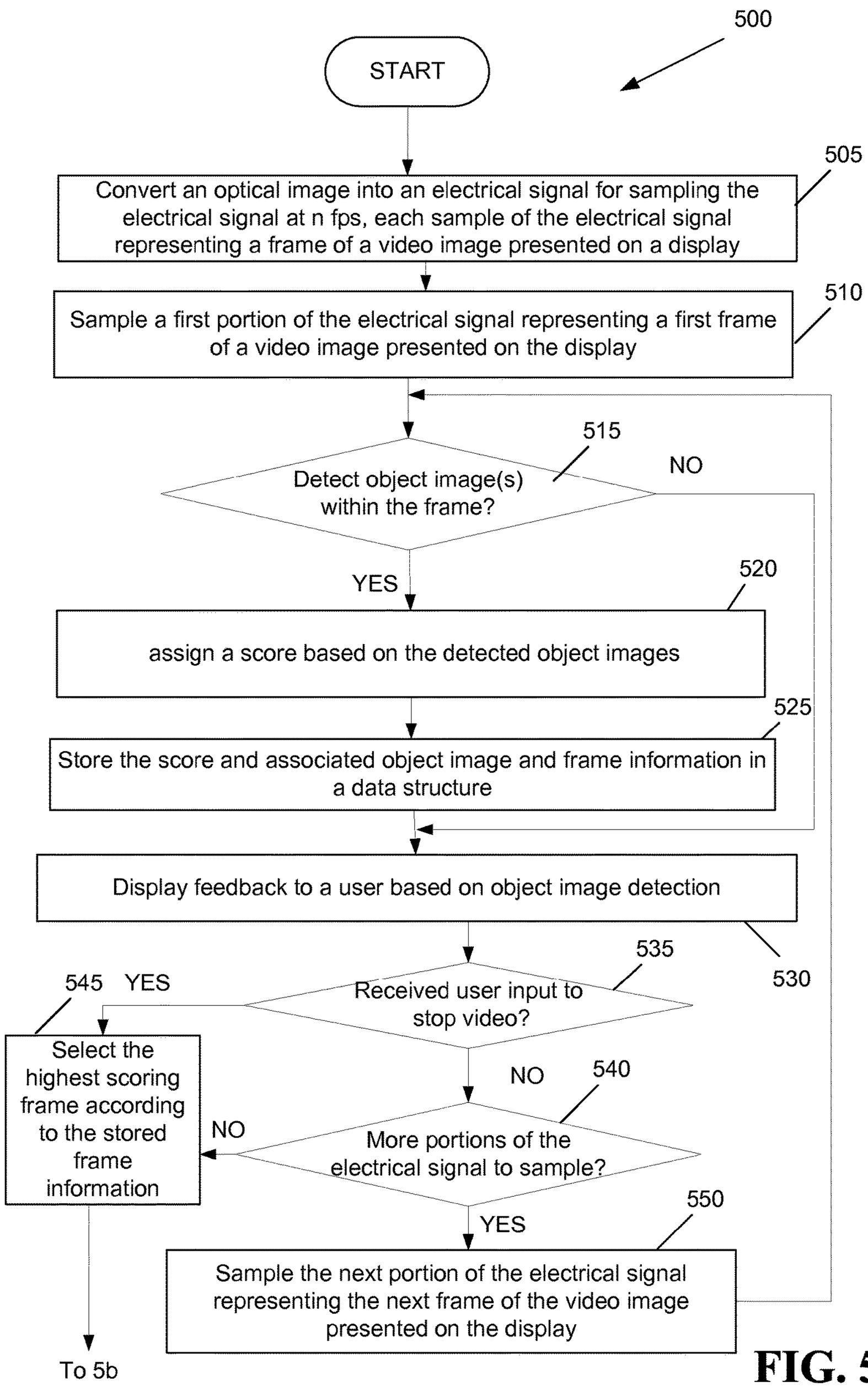
500
START
505
Convert an optical image into an electrical signal for sampling the electrical signal at n fps, each sample of the electrical signal representing a frame of a video image presented on a display
510
Sample a first portion of the electrical signal representing a first frame of a video image presented on the display
515
Detect object image(s) within the frame?
NO
YES
520
assign a score based on the detected object images
525
Store the score and associated object image and frame information in a data structure
Display feedback to a user based on object image detection
530
535
Received user input to stop video?
545 YES
Select the highest scoring frame according to the stored frame information
NO
540
More portions of the electrical signal to sample?
NO
YES
550
Sample the next portion of the electrical signal representing the next frame of the video image presented on the display
To 5b

FIG. 5a

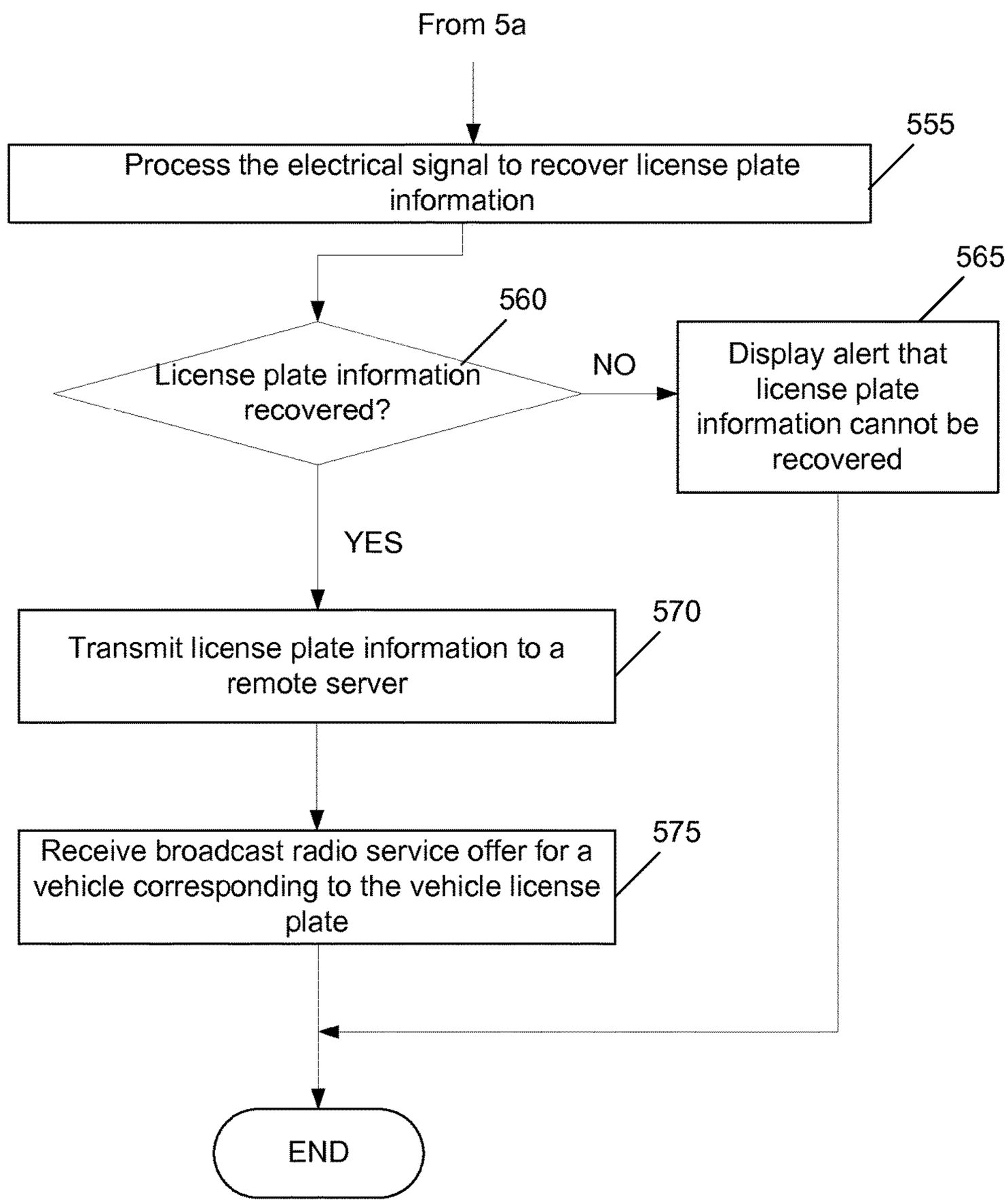
From 5a
Process the electrical signal to recover license plate information
555
License plate information recovered?
560
NO
Display alert that license plate information cannot be recovered
565
YES
Transmit license plate information to a remote server
570
Receive broadcast radio service offer for a vehicle corresponding to the vehicle license plate
575
END

FIG. 5b

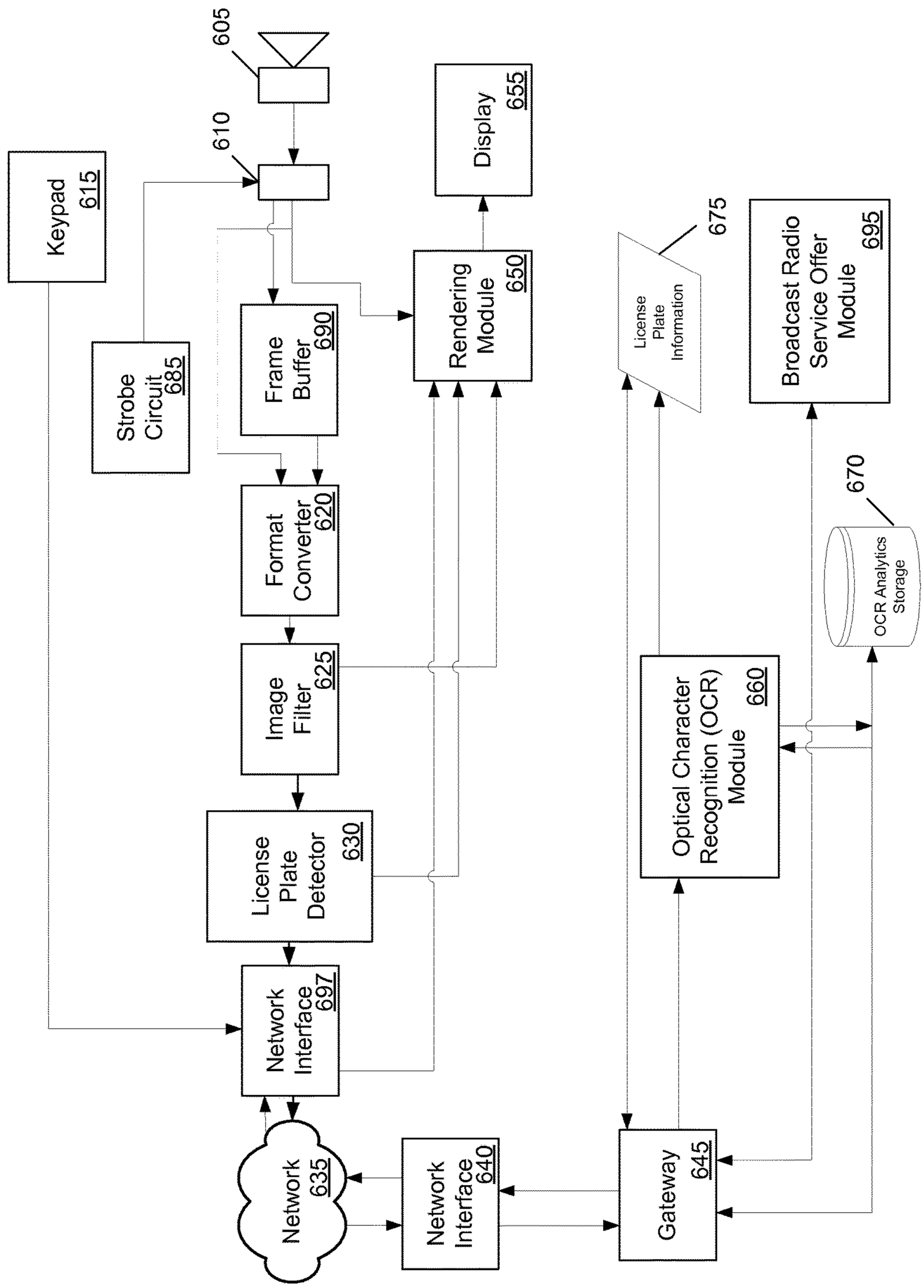
605
610
Keypad 615
Strobe Circuit 685
Frame Buffer 690
Rendering Module 650
Display 655
Format Converter 620
Image Filter 625
License Plate Detector 630
Network Interface 697
Network 635
Network Interface 640
Gateway 645
Optical Character Recognition (OCR) Module 660
License Plate Information
675
Broadcast Radio Service Offer Module 695
OCR Analytics Storage
670

FIG. 6

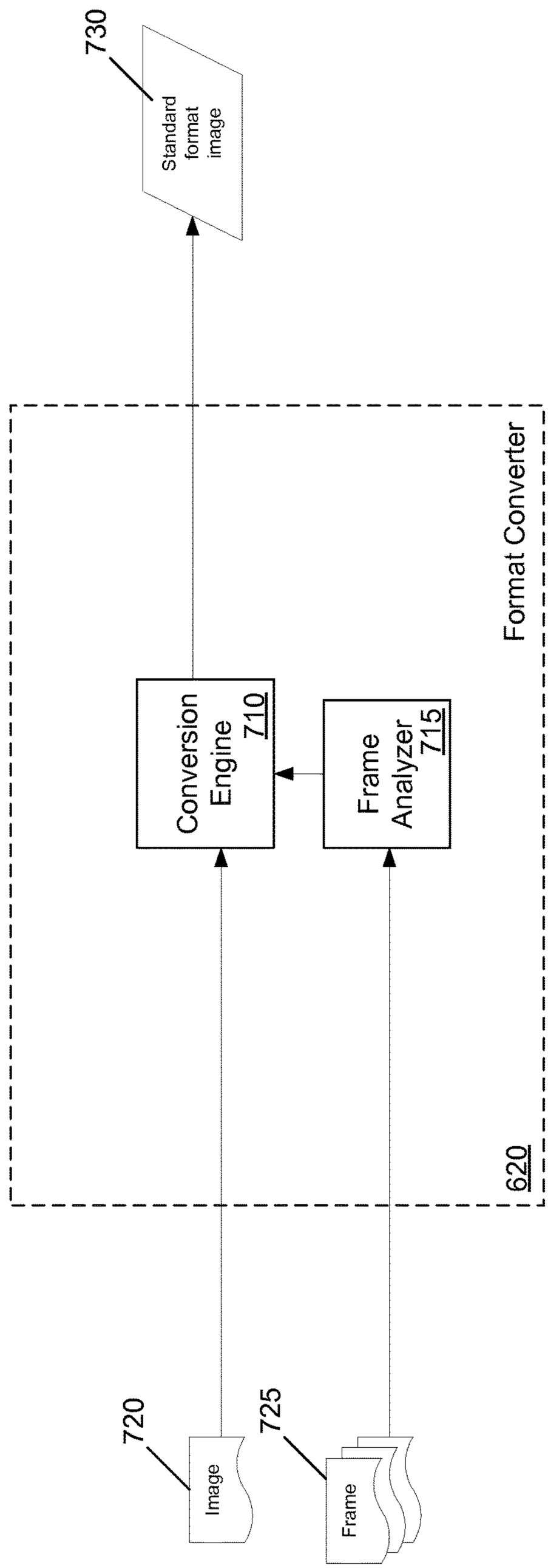
730
Standard format image
Format Converter
Conversion Engine 710
Frame Analyzer 715
620
720
Image
725
Frame

FIG. 7

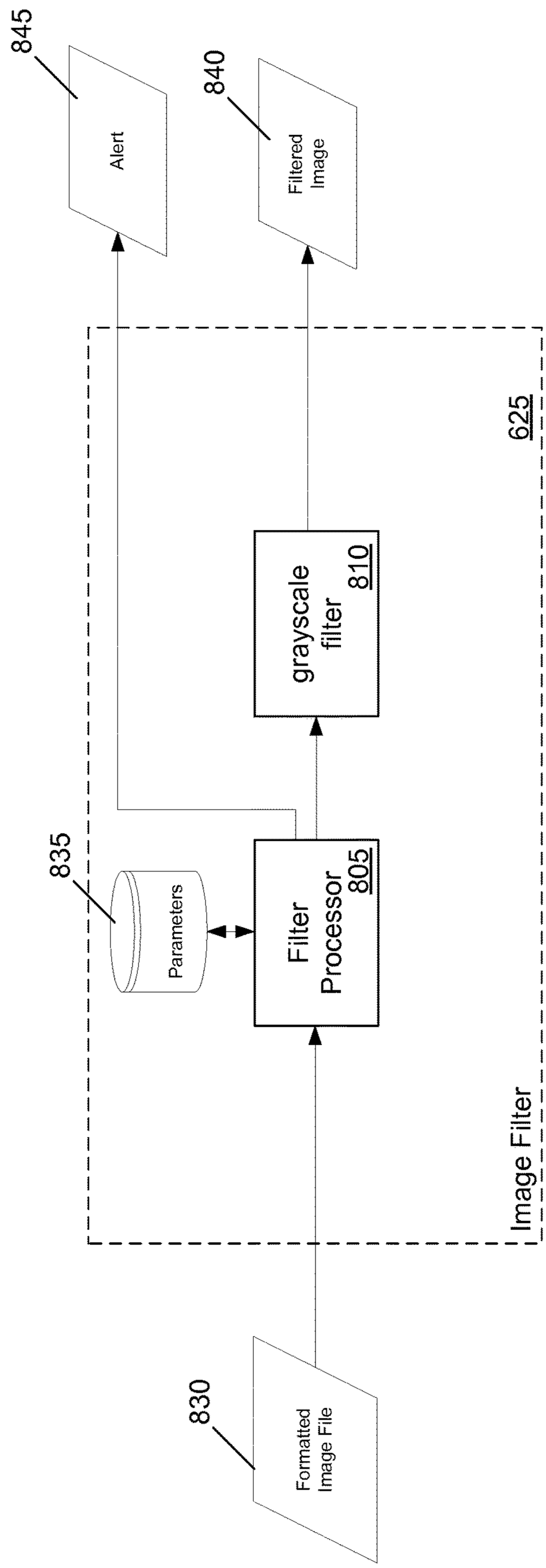
845
Alert
840
Filtered Image
grayscale filter
810
835
Parameters
Filter Processor
805
Image Filter
625
830
Formatted Image File

FIG. 8

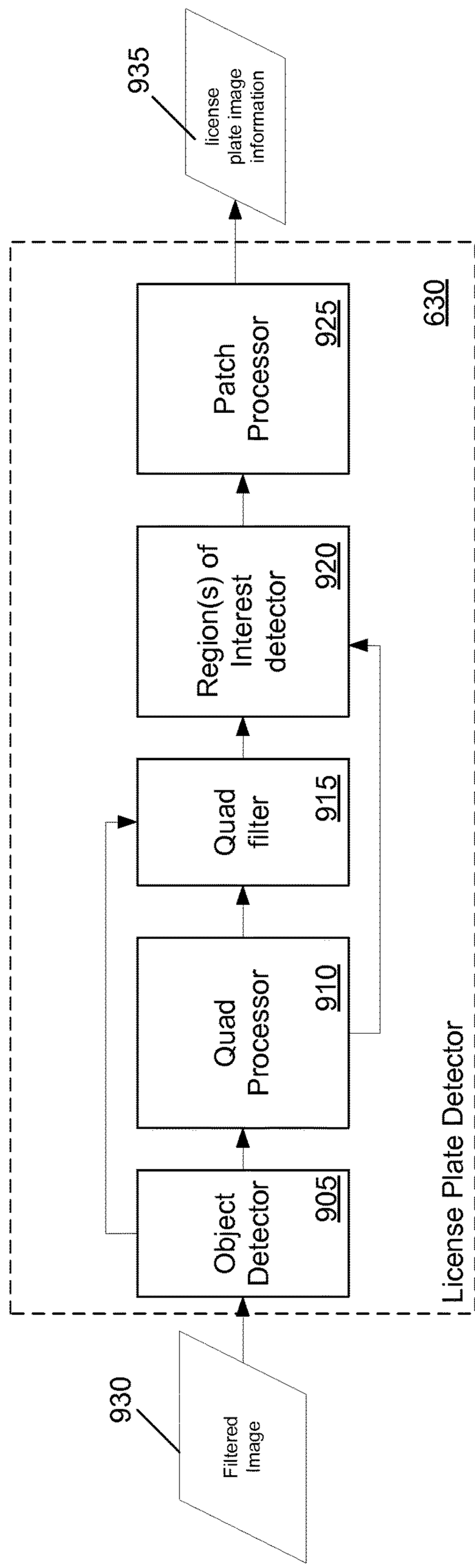
935
license plate image information
Patch Processor
925
630
Region(s) of Interest detector
920
Quad filter
915
Quad Processor
910
Object Detector
905
License Plate Detector
930
Filtered Image

FIG. 9

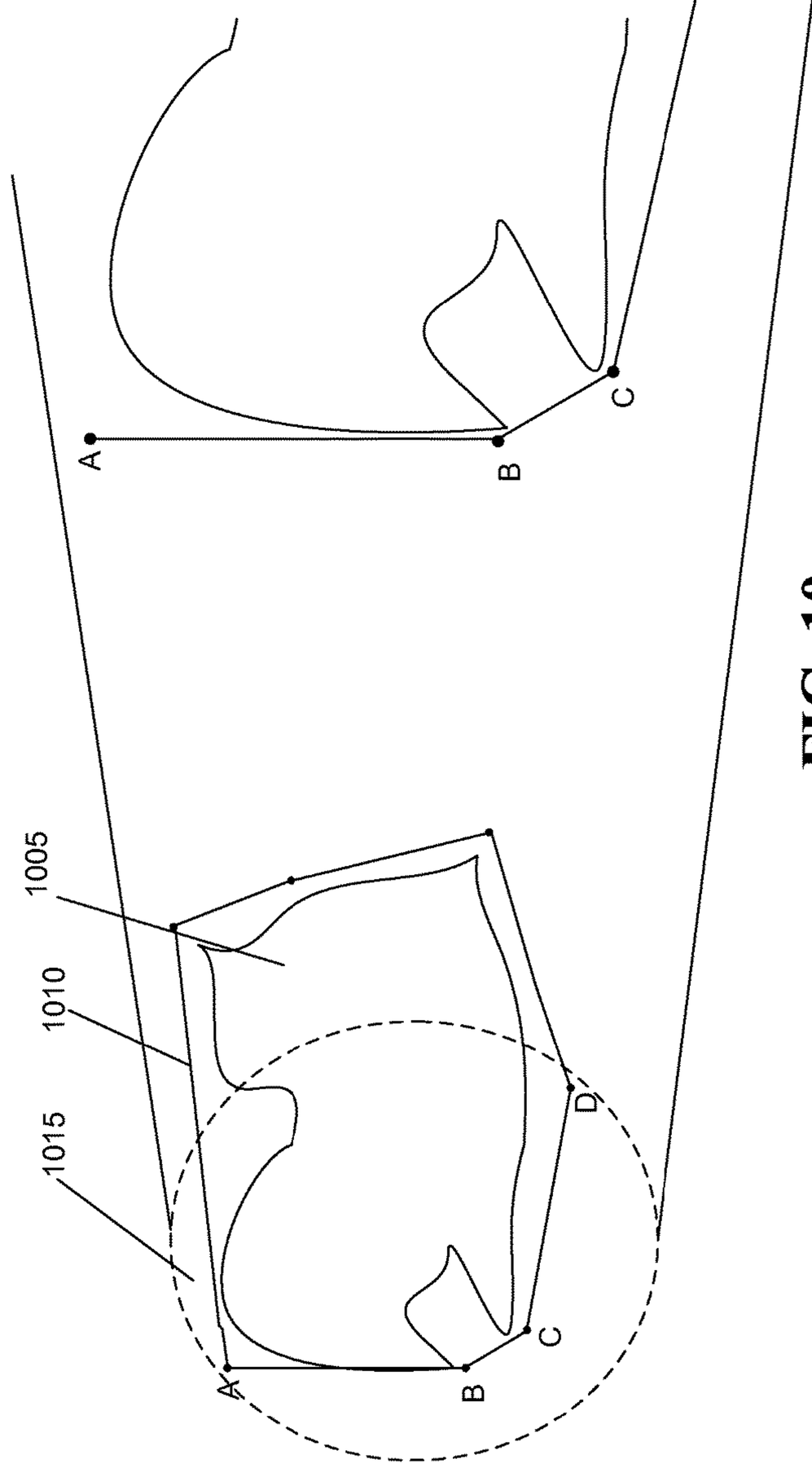

FIG. 10

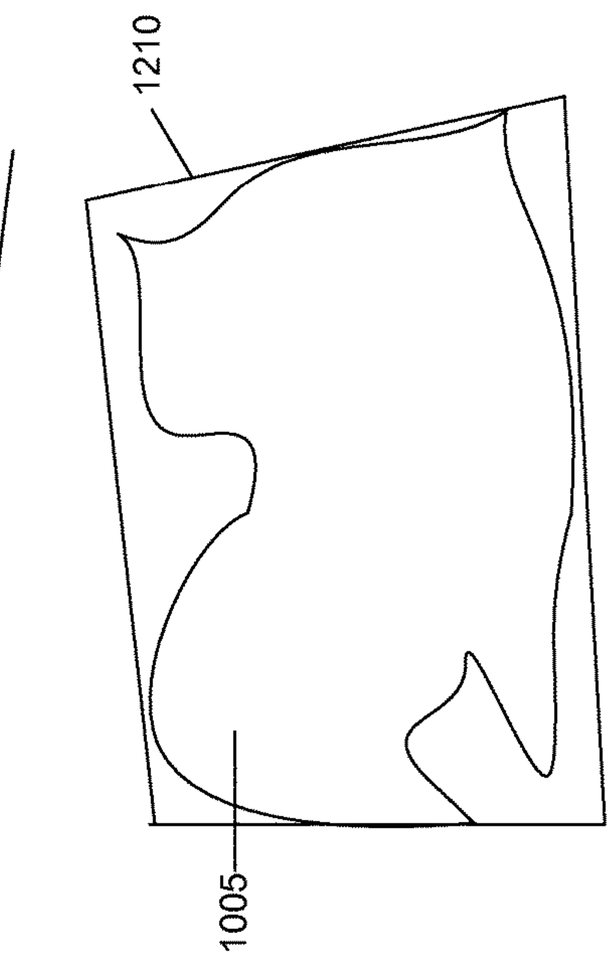

FIG. 12

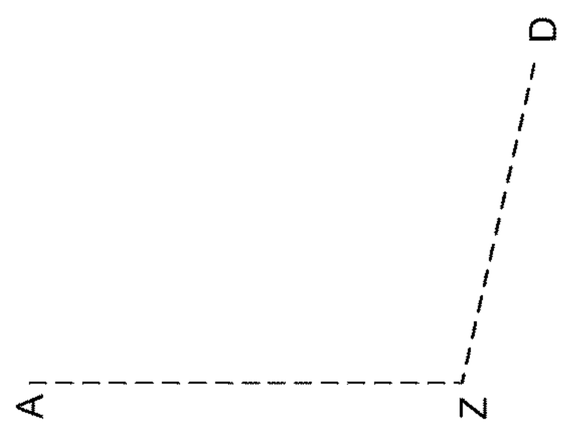

FIG. 11

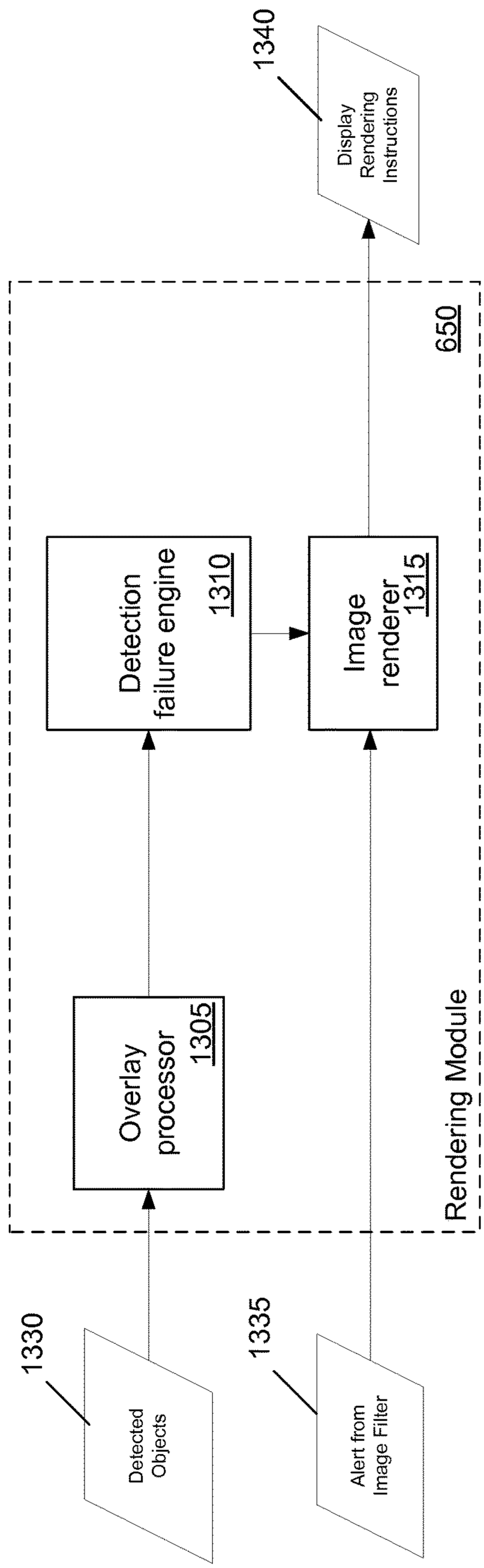
1340
Display Rendering Instructions
650
Detection failure engine
1310
Image renderer
1315
Overlay processor
1305
Rendering Module
1330
Detected Objects
1335
Alert from Image Filter

FIG. 13

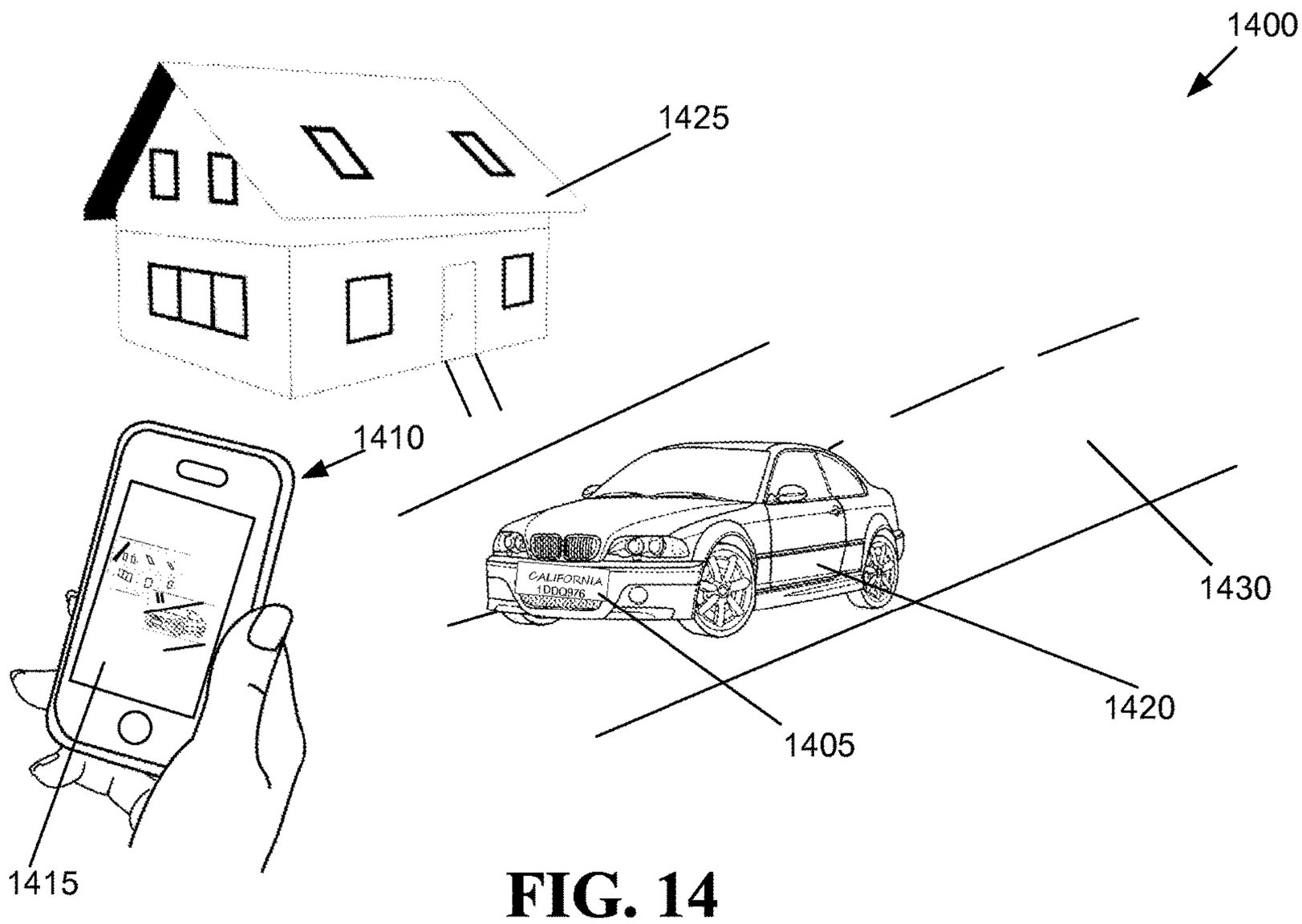
1400
1425
1410
CALIFORNIA
1DDQ976
1430
1420
1405
1415

FIG. 14

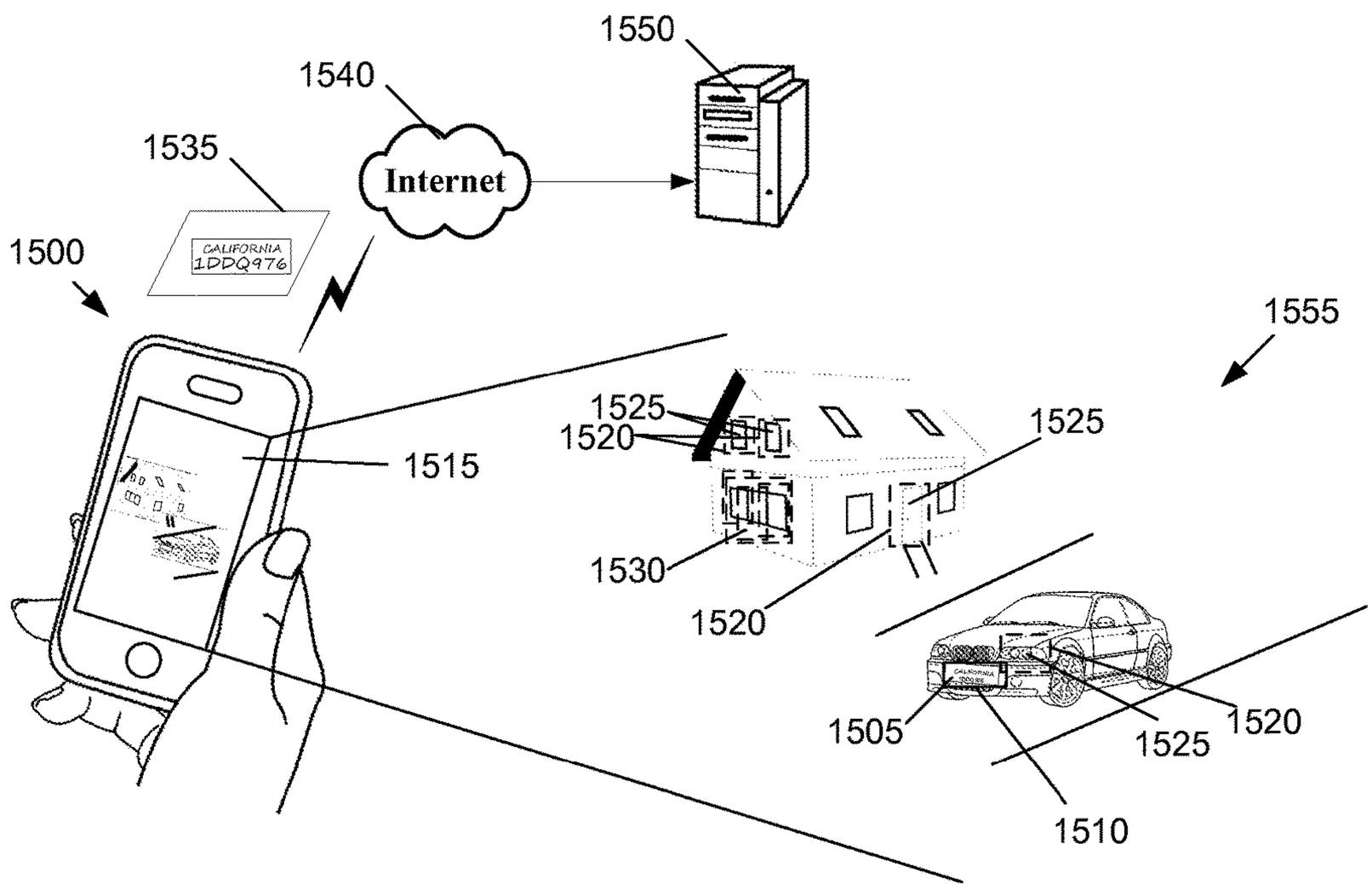
1550
1540
Internet
1535
CALIFORNIA
1DDQ976
1500
1555
1525
1520
1515
1525
1530
1520
1505
1525
1520
1510

FIG. 15

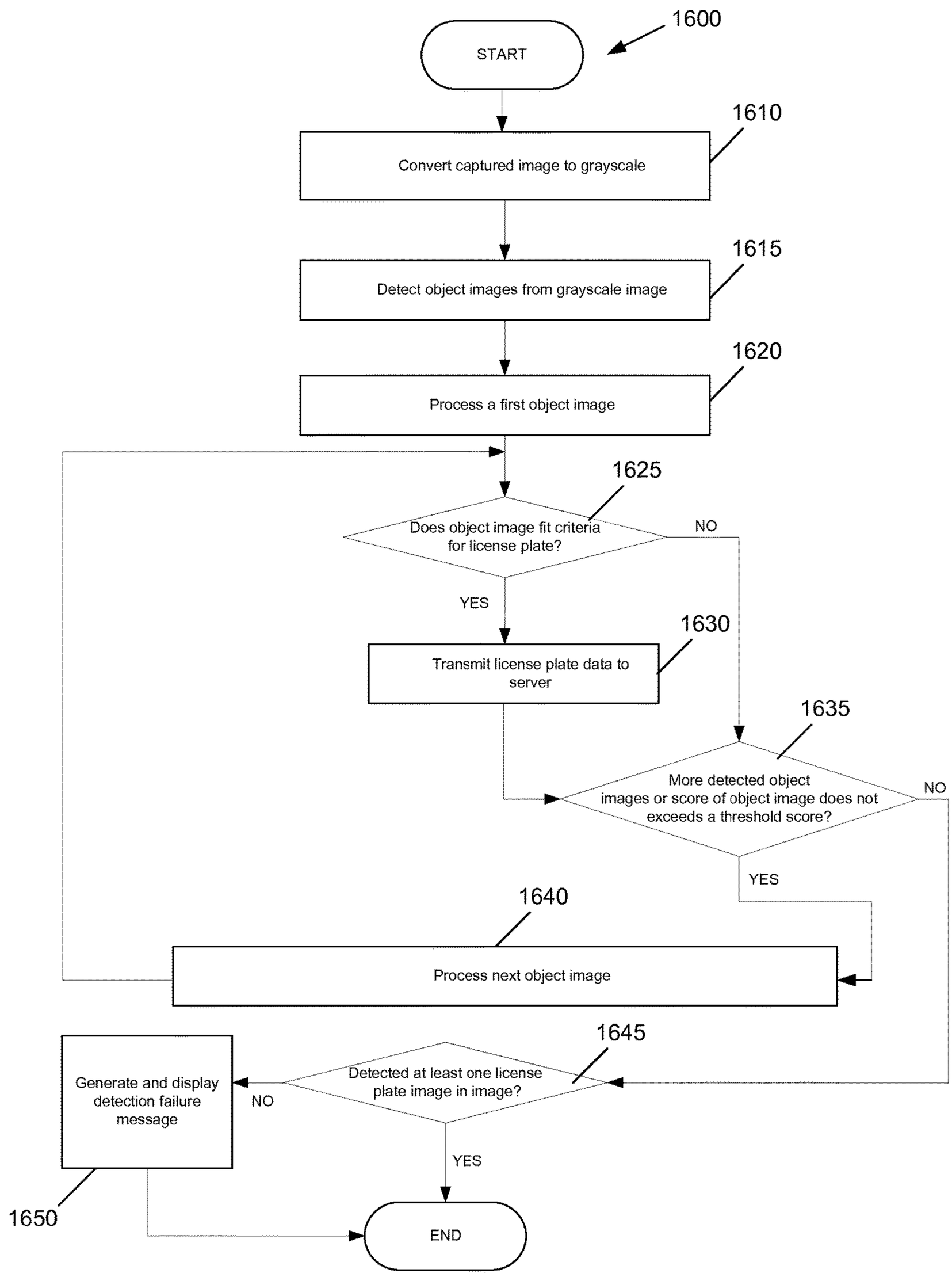
1600
START
1610
Convert captured image to grayscale
1615
Detect object images from grayscale image
1620
Process a first object image
1625
Does object image fit criteria for license plate?
NO
YES
1630
Transmit license plate data to server
1635
More detected object images or score of object image does not exceeds a threshold score?
NO
YES
1640
Process next object image
1645
Detected at least one license plate image in image?
NO
YES
Generate and display detection failure message
1650
END

FIG. 16

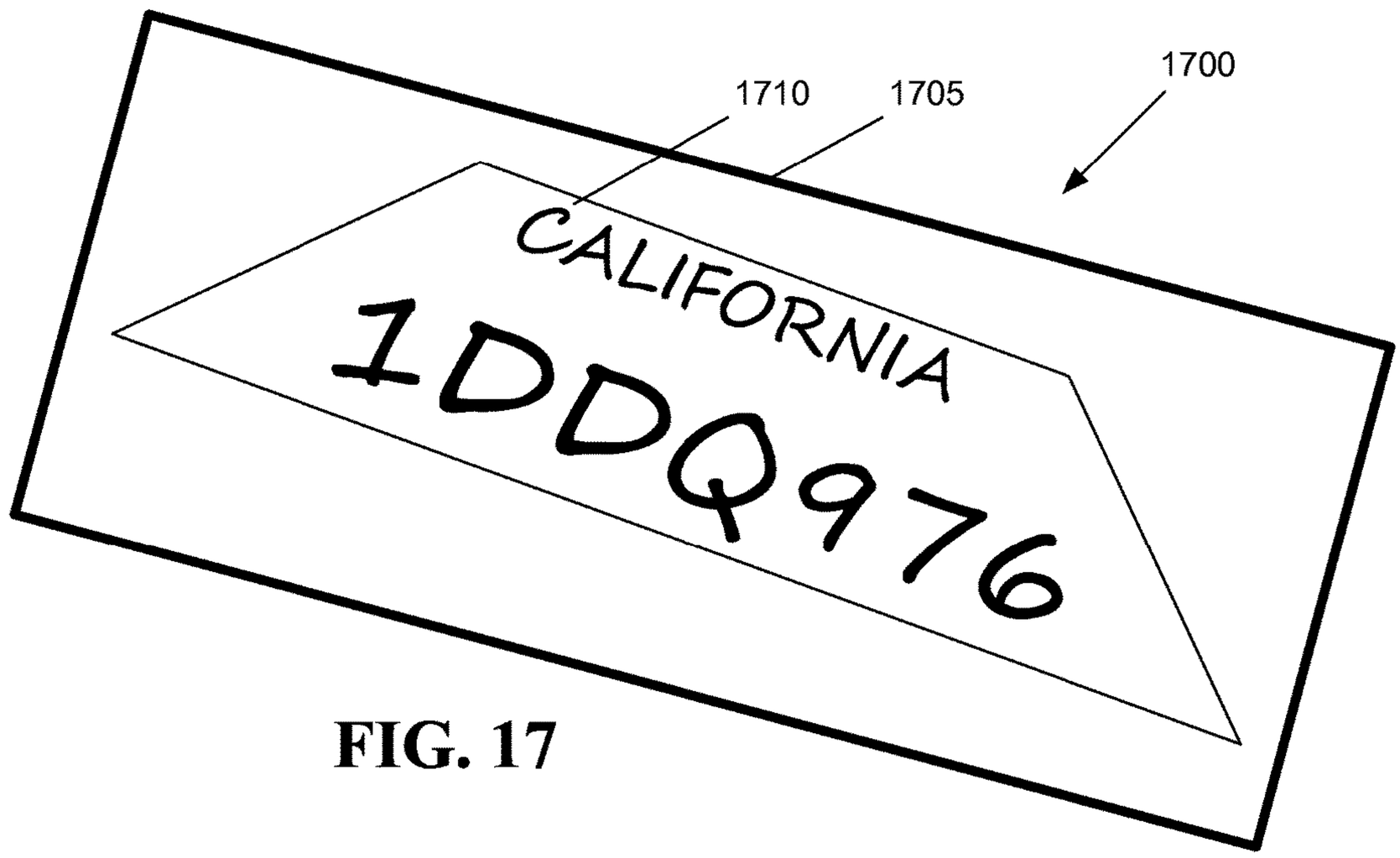
1700
1710
1705
CALIFORNIA
1DDQ976

FIG. 17

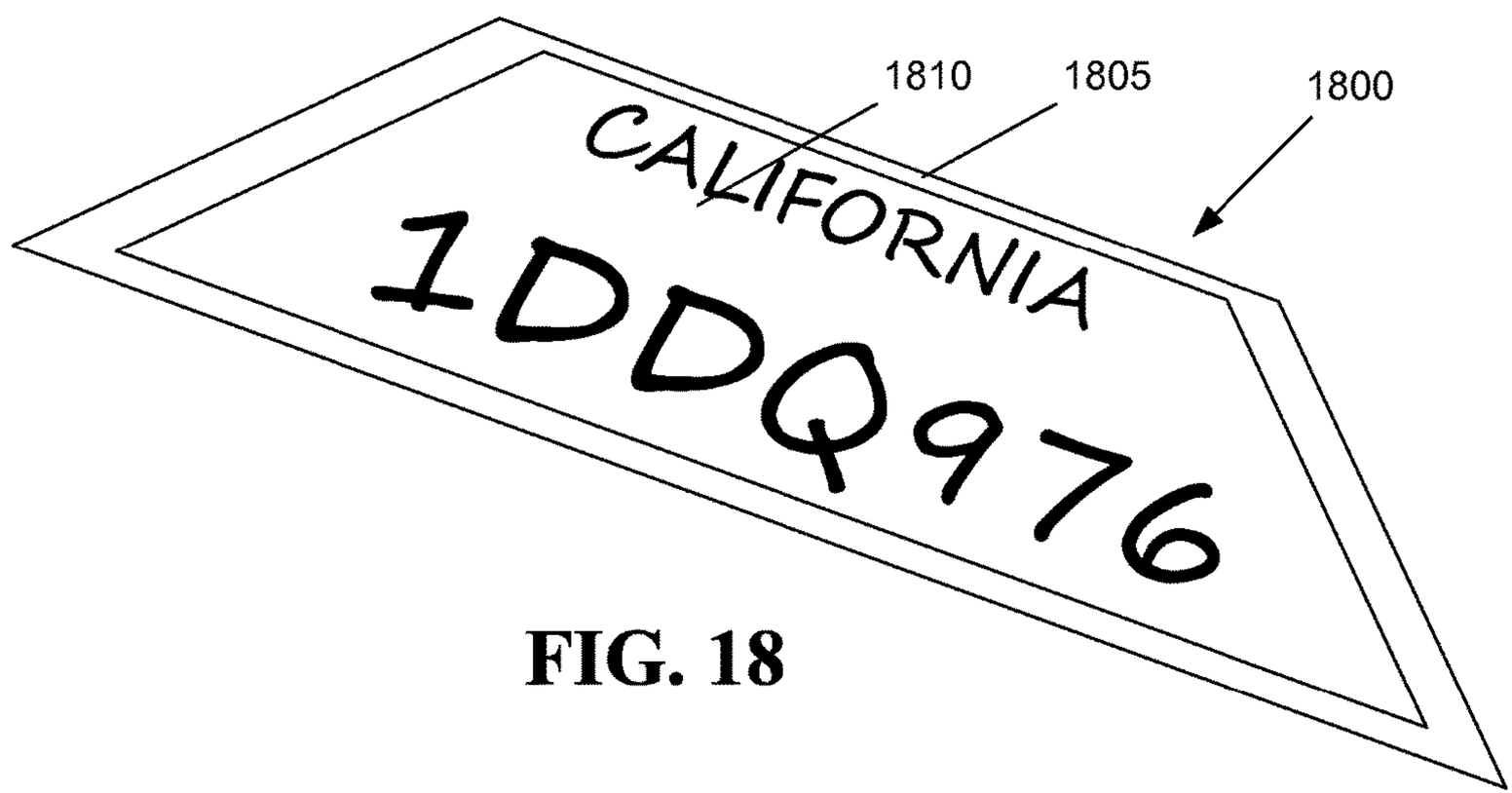
1810
1805
1800
CALIFORNIA
1DDQ976

FIG. 18

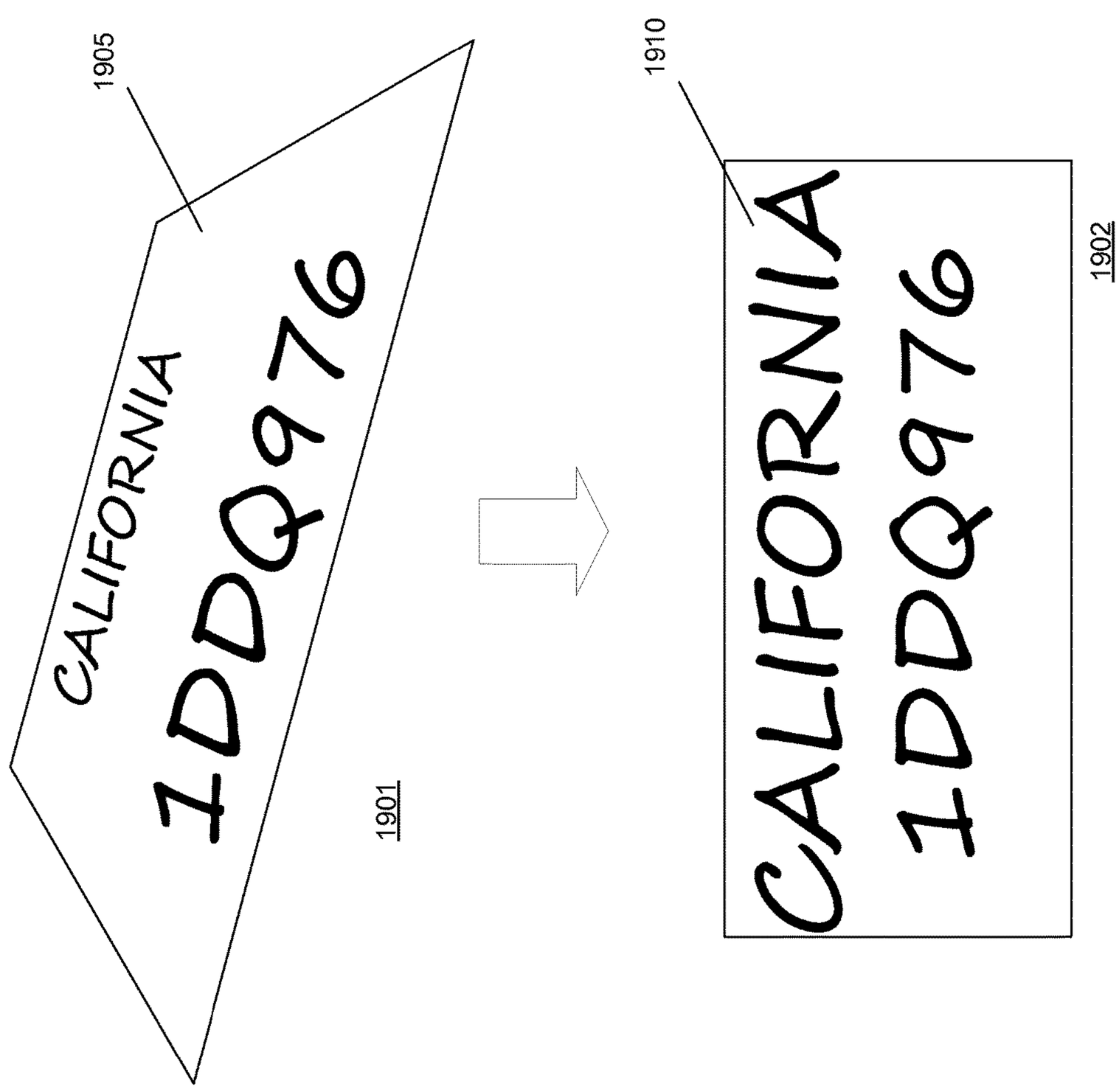
1905
CALIFORNIA
1DDQ976
1901
1910
CALIFORNIA
1DDQ976
1902

FIG. 19

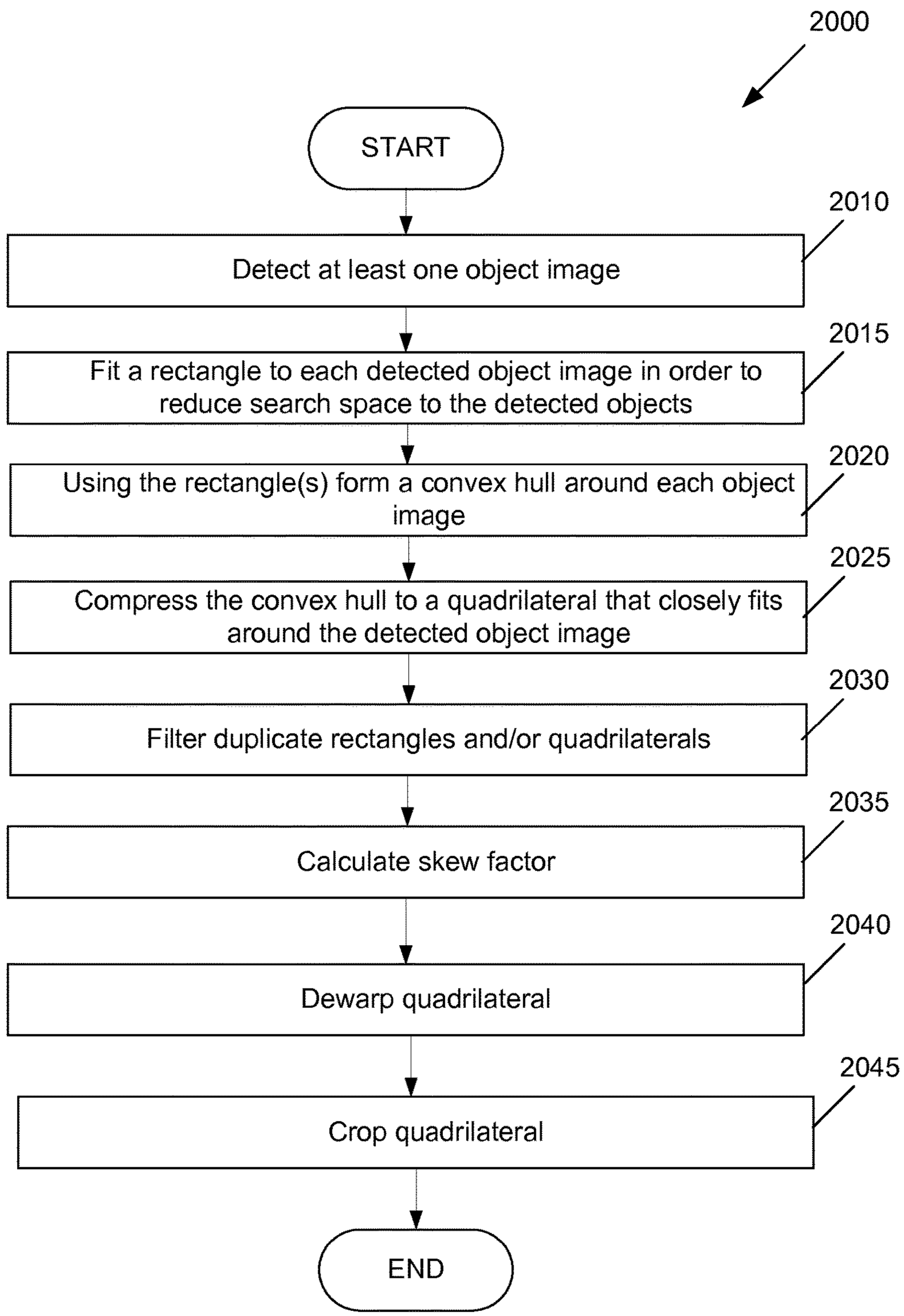
2000
START
2010
Detect at least one object image
2015
Fit a rectangle to each detected object image in order to reduce search space to the detected objects
2020
Using the rectangle(s) form a convex hull around each object image
2025
Compress the convex hull to a quadrilateral that closely fits around the detected object image
2030
Filter duplicate rectangles and/or quadrilaterals
2035
Calculate skew factor
2040
Dewarp quadrilateral
2045
Crop quadrilateral
END

FIG. 20

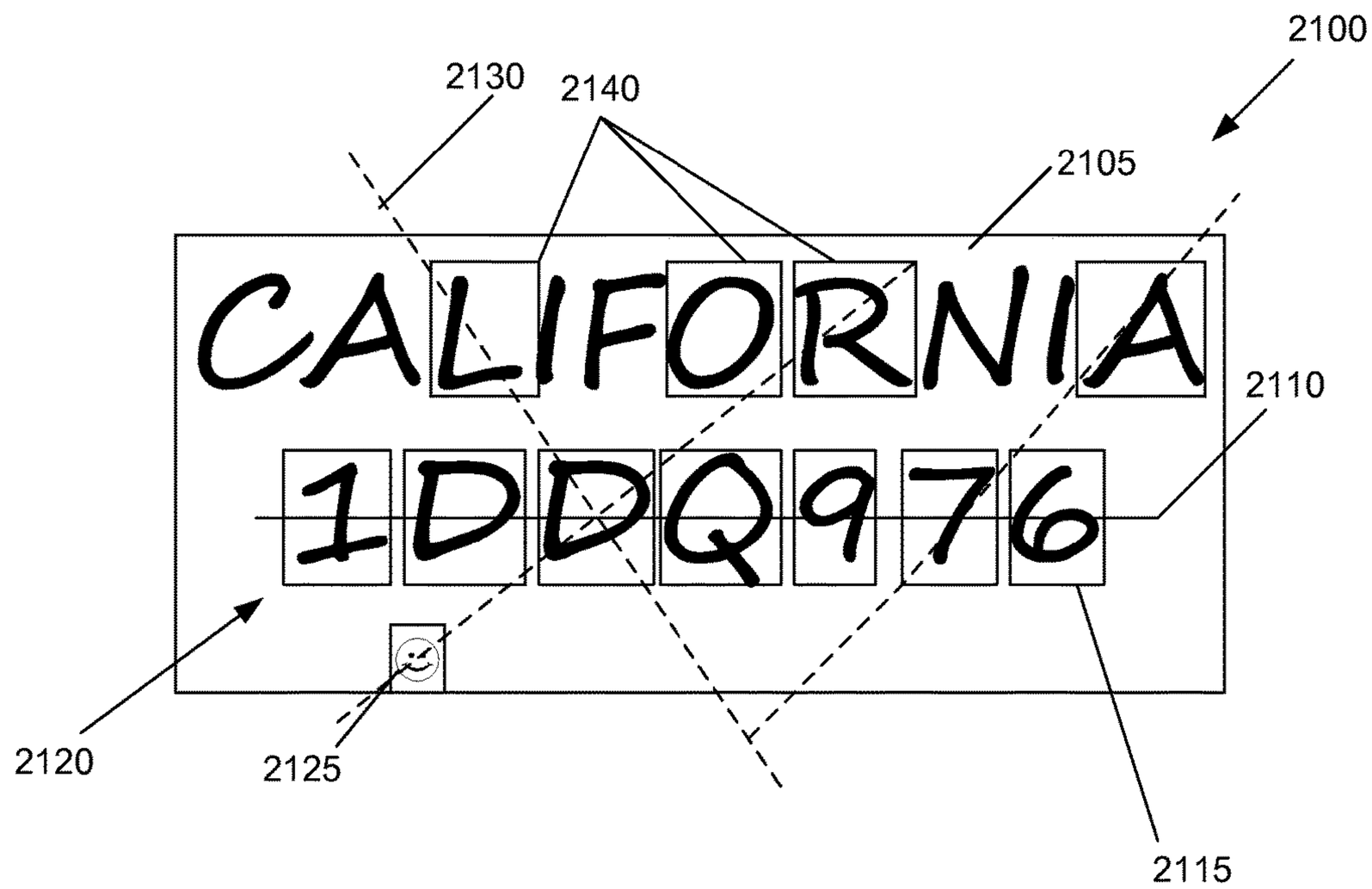

FIG. 21

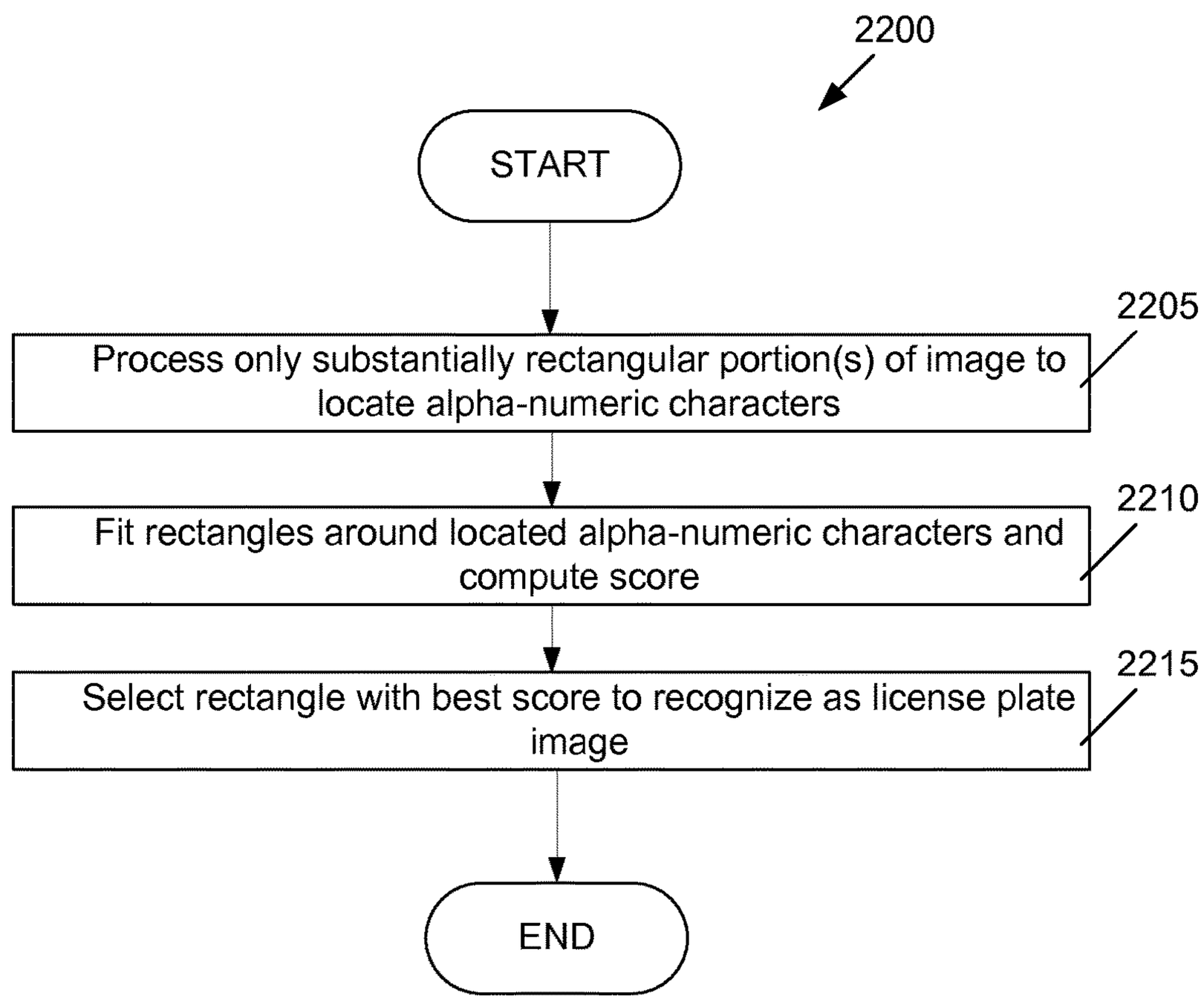
2200
START
2205
Process only substantially rectangular portion(s) of image to locate alpha-numeric characters
2210
Fit rectangles around located alpha-numeric characters and compute score
2215
Select rectangle with best score to recognize as license plate image
END

FIG. 22

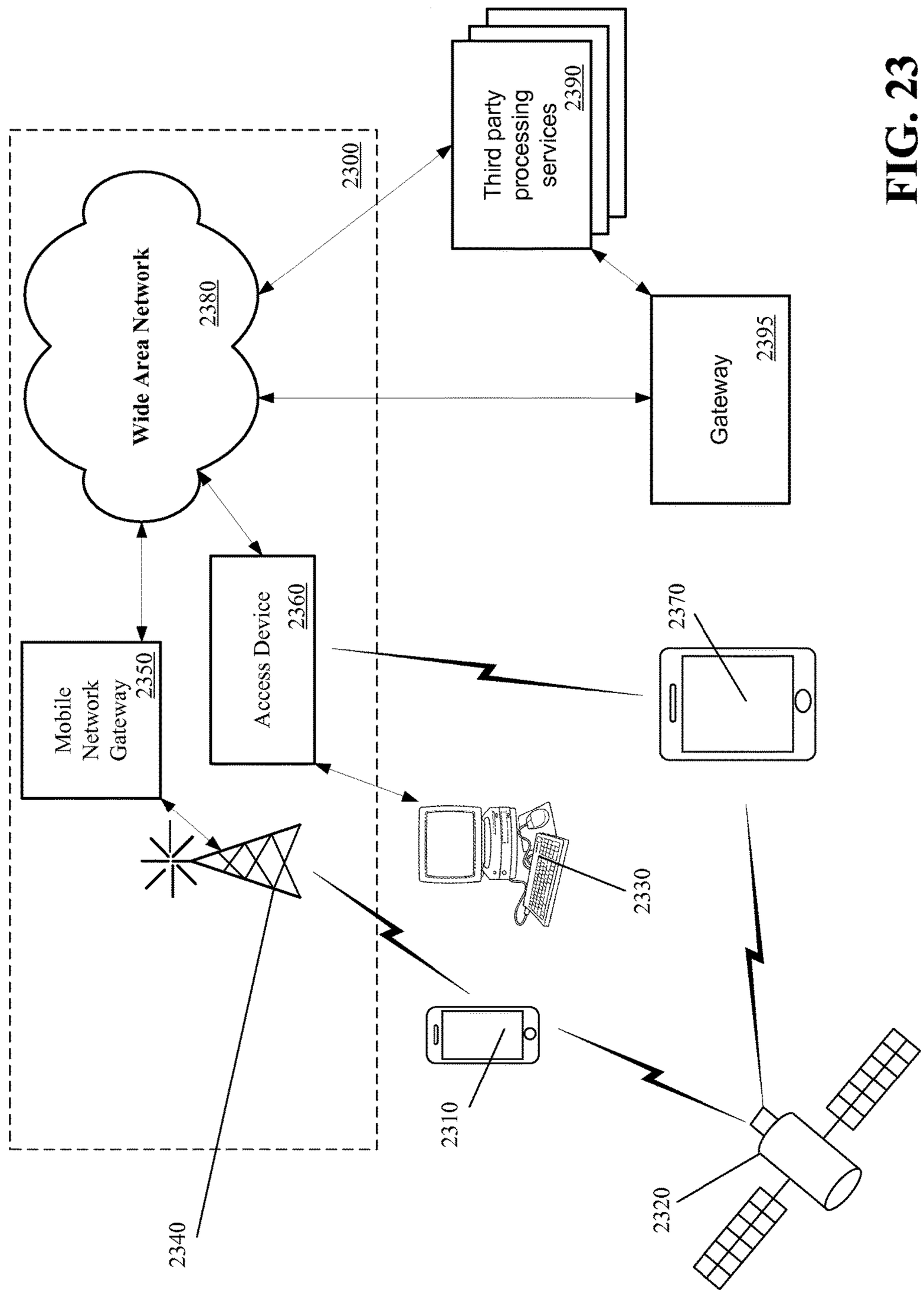
2300
Wide Area Network
2380
Third party processing services
2390
Gateway
2395
Mobile Network Gateway
2350
Access Device
2360
2370
2330
2310
2320
2340

FIG. 23

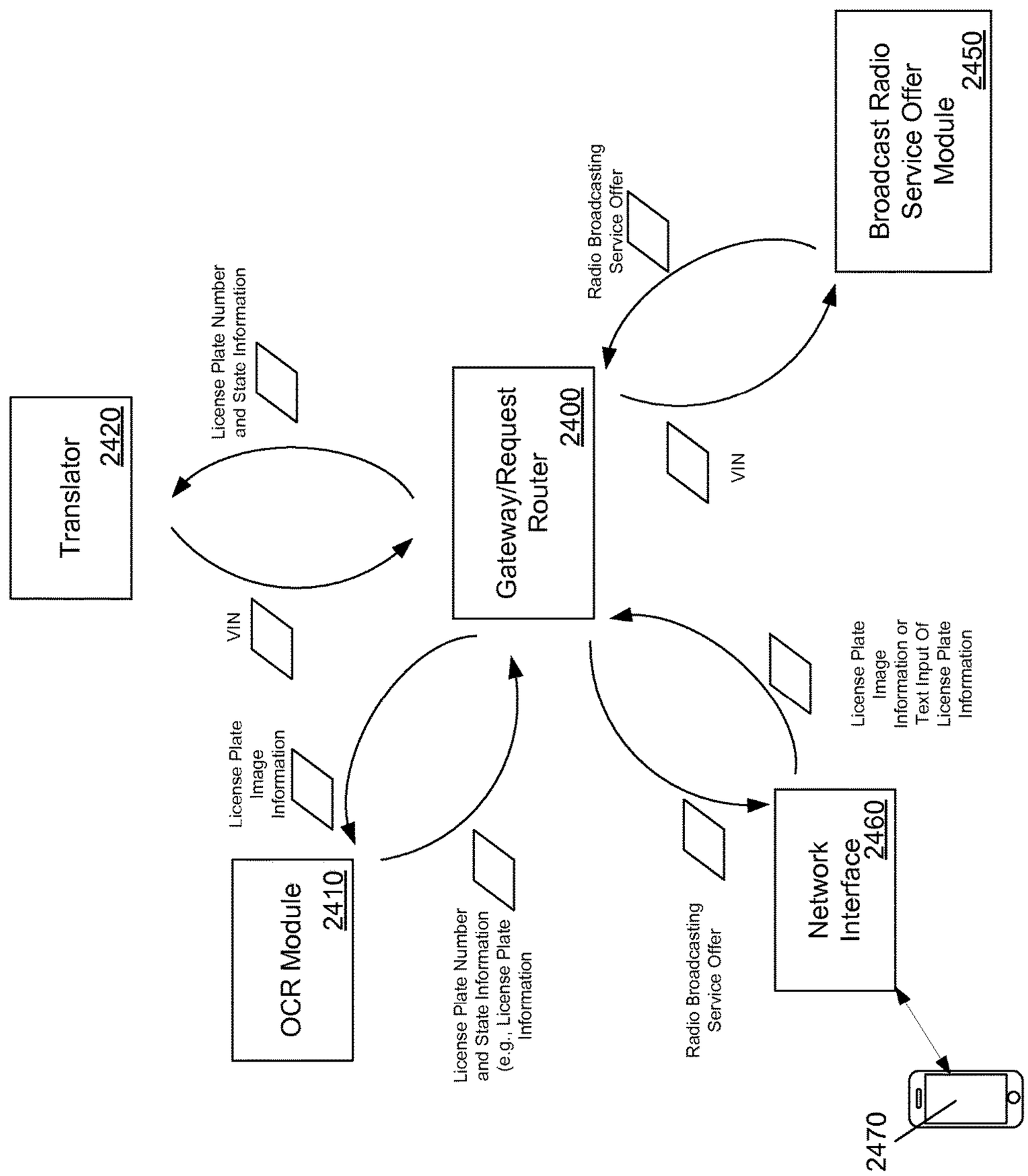
Translator
2420
License Plate Number and State Information
VIN
Gateway/Request Router
2400
Radio Broadcasting Service Offer
VIN
Broadcast Radio Service Offer Module
2450
License Plate Image Information
OCR Module
2410
License Plate Number and State Information (e.g., License Plate Information
License Plate Image Information or Text Input Of License Plate Information
Radio Broadcasting Service Offer
Network Interface
2460
2470

FIG. 24

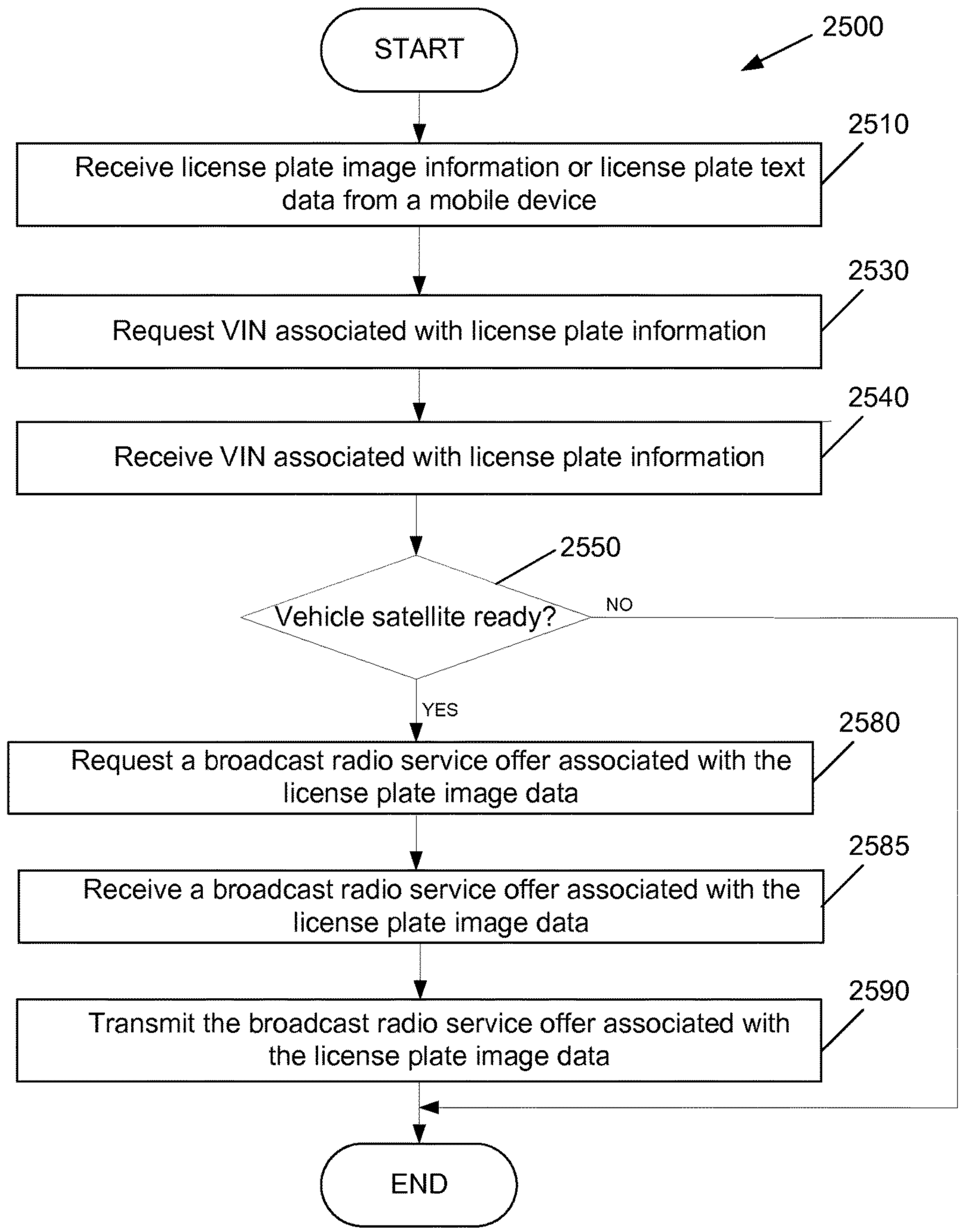
START
2500
2510
Receive license plate image information or license plate text data from a mobile device
2530
Request VIN associated with license plate information
2540
Receive VIN associated with license plate information
2550
Vehicle satellite ready?
NO
YES
2580
Request a broadcast radio service offer associated with the license plate image data
2585
Receive a broadcast radio service offer associated with the license plate image data
2590
Transmit the broadcast radio service offer associated with the license plate image data
END

FIG. 25

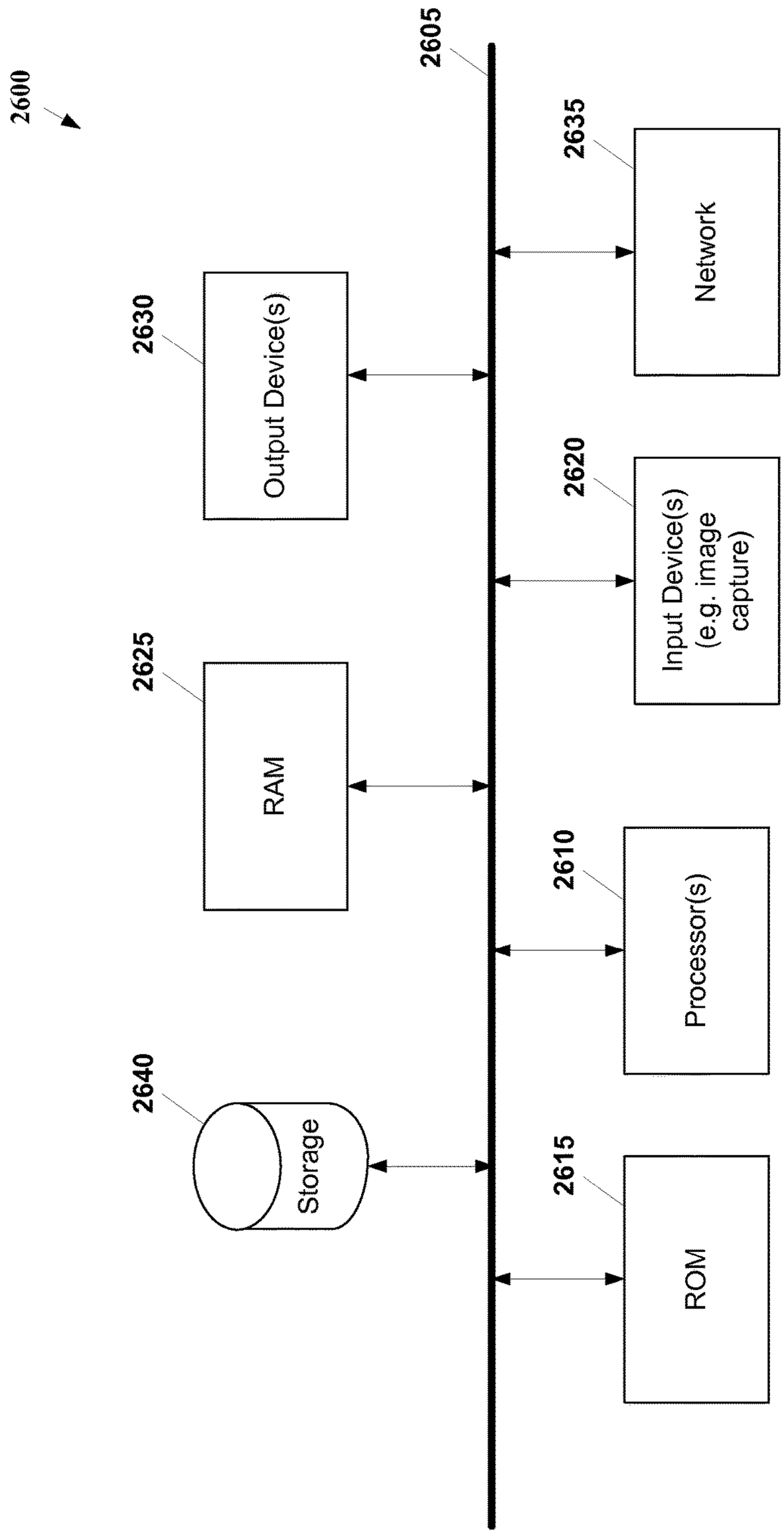
2600
2605
2630
Output Device(s)
2635
Network
2620
Input Device(s)
(e.g. image
capture)
2625
RAM
2610
Processor(s)
2640
Storage
2615
ROM

FIG. 26

METHOD AND APPARATUS FOR RECEIVING A BROADCAST RADIO SERVICE OFFER FROM AN IMAGE

CLAIM OF BENEFIT TO PRIOR APPLICATIONS

This application claims the benefit of priority from U.S. patent application Ser. No. 14/318,397, entitled "METHOD AND SYSTEM FOR PROVIDING A VALUATION DERIVED FROM AN IMAGE," filed on Jun. 27, 2014, U.S. patent application Ser. No. 14/455,841, entitled "METHOD AND SYSTEM FOR PROVIDING A LISTING OF VEHICLES BASED ON VEHICLE LICENSE PLATE INFORMATION FROM A SIMILAR VEHICLE," filed on Aug. 8, 2014, and U.S. patent application Ser. No. 14/613,323 entitled "METHOD AND APPARATUS FOR RECOVERING LICENSE PLATE INFORMATION FROM AN IMAGE," filed on Feb. 3, 2015.

BACKGROUND

Field

The present disclosure relates generally to a method and apparatus for detecting license plate information from an image of a license plate and more specifically, detecting license plate information from an optical image, captured by a mobile apparatus, that includes a license plate image and several other object images.

Background

In recent years, collecting still images of license plates has become a common tool used by authorities to catch the drivers of vehicles that may engage in improper or unlawful activity. For example, law enforcement authorities have set up stationary traffic cameras to photograph the license plates of vehicles that may be traveling above a posted speed limit at a specific portion of a road or vehicles that drive through red lights. Toll booth operators also commonly use such stationary cameras to photograph vehicles that may pass through a toll booth without paying the required toll. However, all of these scenarios have a common thread. The camera must be manually installed and configured such that it will always photograph the vehicle's license plate at a specific angle and when the vehicle is in a specific location. Any unexpected modifications, such as a shift in angle or location of the camera would render the camera incapable of properly collecting license plate images.

Additionally, camera equipped mobile apparatuses (e.g., smartphones) have become increasingly prevalent in today's society. Mobile apparatuses are frequently used to capture optical images and for many users serve as a replacement for a simple digital camera because the camera equipped mobile apparatus provides an image that is often as good as those produced by simple digital cameras and can easily be transmitted (shared) over a network.

The positioning constraints put on the traffic cameras make it difficult to take images of license plates from different angles and distances and still achieve an accurate reading. Therefore, it would be difficult to scale the same license plate image capture process performed by law enforcement authorities to mobile apparatuses. In other words, it is difficult to derive license plate information from an image of a license plate taken from a mobile image capture apparatus at a variety of angles, distances, ambient conditions, mobile apparatus motion, and when other object images are also in the image, which hinders a user's ability to easily gather valuable information about specific vehicles when engaging in a number of different vehicle related activities such as buying and selling vehicles, insuring vehicles, and obtaining financing for vehicles.

SUMMARY

Several aspects of the present invention will be described more fully hereinafter with reference to various methods and apparatuses.

Some aspects of the invention relate to a mobile apparatus including an image sensor configured to convert an optical image into an electrical signal. The optical image includes an image of a vehicle license plate. The mobile apparatus includes a license plate detector configured to process the electrical signal to recover information from the vehicle license plate image. The mobile apparatus includes an interface configured to transmit the vehicle license plate information to a remote apparatus and receive a broadcast radio service offer corresponding to the vehicle license plate image in response to the transmission.

Other aspects of the invention relate to a mobile apparatus including an image sensor configured to convert an optical image into an electrical signal. The optical image includes several object images. One of the object images includes a vehicle license plate image. The mobile apparatus includes a license plate detector configured to process the electrical signal to recover information from the vehicle license plate image from a portion of the electrical signal corresponding to said one of the object images. The mobile apparatus includes an interface configured to transmit the vehicle license plate information to a remote apparatus and receive a broadcast radio service offer corresponding to the vehicle license plate image in response to the transmission.

Other aspects of the invention relate to a mobile apparatus including an image sensor configured to convert an optical image into an electrical signal. The mobile apparatus includes a display. The mobile apparatus includes a rendering module configured to render the optical image to the display. The mobile apparatus includes an image filter configured to apply one or more filter parameters to the electrical signal based on at least one of color temperature of the image, ambient light, and motion of the apparatus. The mobile apparatus includes a license plate detector configured to process the electrical signal to recover information from the vehicle license plate image. The rendering module is further configured to overlay a detection indicator on the displayed image to assist the user position of the apparatus with respect to the optical image in response to a signal from the image filter. The rendering module is further configured to provide an alert to the display when the license plate detector fails to recover the vehicle license plate information. The mobile apparatus includes an interface configured to transmit the vehicle license plate information to a remote apparatus and receive a broadcast radio service offer corresponding to the vehicle license plate image in response to the transmission.

Other aspects of the invention relate to a computer program product for a mobile apparatus having an image sensor configured to convert an optical image into an electrical signal. The optical image includes several object images. One of the object images includes an image of a vehicle license plate. The computer program product includes a machine readable medium including code to process the electrical signal to select said one of the object images. The machine readable medium includes code to process a portion of the electrical signal corresponding to the selected said one of the object images to recover information

from the vehicle license plate image. The machine readable medium includes code to transmit the vehicle license plate information to a remote apparatus. The machine readable medium includes code to receive a broadcast radio service offer corresponding to the vehicle license plate image in response to the transmission.

Other aspects of the invention relate to a mobile apparatus including an image sensor configured to convert an optical image into an electrical signal. The optical image includes an image of a vehicle license plate. The mobile apparatus includes a timing circuit configured to sample the electrical signal at a frame rate. The mobile apparatus includes a license plate detector configured to process the sampled electrical signal to recover information from the vehicle license plate image. The mobile apparatus includes an interface configured to transmit the vehicle license plate information to a remote apparatus and receive a broadcast radio service offer corresponding to the vehicle license plate image in response to the transmission.

It is understood that other aspects of methods and apparatuses will become readily apparent to those skilled in the art from the following detailed description, wherein various aspects of apparatuses and methods are shown and described by way of illustration. As understood by one of ordinary skill in the art, these aspects may be implemented in other and different forms and its several details are capable of modification in various other respects. Accordingly, the drawings and detailed description are to be regarded as illustrative in nature and not as restrictive.

BRIEF DESCRIPTION OF THE DRAWINGS

Various aspects of processes and apparatuses will now be presented in the detailed description by way of example, and not by way of limitation, with reference to the accompanying drawings, wherein:

FIG. **1** conceptually illustrates an exemplary embodiment of an apparatus that is capable of capturing an optical image and detecting a license plate image from the optical image.

FIG. **2** illustrates an exemplary embodiment transmitting license plate information derived from an optical image to an external server.

FIG. **3** illustrates an exemplary embodiment of an apparatus for displaying a broadcast radio service offer for a vehicle corresponding to a license plate image.

FIG. **4** conceptually illustrates an exemplary embodiment of a process of obtaining a broadcast radio service offer from an optical image.

FIGS. **5***a* and **5***b* conceptually illustrate an exemplary embodiment of a process of obtaining a broadcast radio service offer from a video.

FIG. **6** illustrates an exemplary embodiment of a system architecture of a license plate detection apparatus.

FIG. **7** illustrates an exemplary embodiment of a diagram of the format converter.

FIG. **8** illustrates an exemplary embodiment of a diagram of the image filter.

FIG. **9** illustrates an exemplary embodiment of a diagram of a license plate detector.

FIG. **10** illustrates an exemplary embodiment of an object image with a convex hull fit around the object image.

FIG. **11** illustrates an exemplary embodiment of a method for forming a quadrilateral from a convex hull.

FIG. **12** illustrates an exemplary embodiment of an object image enclosed in a quadrilateral.

FIG. **13** illustrates an exemplary embodiment of a diagram of the rendering module.

FIG. **14** illustrates an exemplary embodiment of a scene that may be captured by a license plate detection apparatus.

FIG. **15** provides a high level illustration of an exemplary embodiment of how an image may be rendered on a mobile apparatus by the license plate detection apparatus and transmission of a detected license plate image to a server.

FIG. **16** conceptually illustrates an exemplary embodiment of a more detailed process for processing an electrical signal to recover license plate information.

FIG. **17** illustrates an exemplary embodiment of an object image comprising a license plate image within a rectangle.

FIG. **18** illustrates an exemplary embodiment of an object image comprising a license plate image within a quadrilateral.

FIG. **19** is an illustration of an exemplary embodiment of the dewarping process being performed on a license plate image.

FIG. **20** conceptually illustrates an exemplary embodiment of a process for processing an optical image comprising a license plate image.

FIG. **21** illustrates an exemplary embodiment of a diagram for determining whether a patch is an actual license plate image.

FIG. **22** conceptually illustrates an exemplary embodiment of a process for processing a patch comprising a candidate license plate image.

FIG. **23** illustrates an exemplary embodiment of an operating environment for communication between a gateway and client apparatuses.

FIG. **24** illustrates an exemplary embodiment of data flow between a gateway and various other modules.

FIG. **25** conceptually illustrates an exemplary embodiment of a process for transmitting a broadcast radio service offer for a vehicle corresponding to a license plate image.

FIG. **26** illustrates an exemplary embodiment of an electronic system that may implement the license plate detection apparatus.

DETAILED DESCRIPTION

The detailed description set forth below in connection with the appended drawings is intended as a description of various exemplary embodiments of the present invention and is not intended to represent the only embodiments in which the present invention may be practiced. The detailed description includes specific details for the purpose of providing a thorough understanding of the present invention. However, it will be apparent to those skilled in the art that the present invention may be practiced without these specific details. In some instances, well-known structures and components are shown in block diagram form in order to avoid obscuring the concepts of the present invention. Acronyms and other descriptive terminology may be used merely for convenience and clarity and are not intended to limit the scope of the invention.

The word "exemplary" or "embodiment" is used herein to mean serving as an example, instance, or illustration. Any embodiment described herein as "exemplary" is not necessarily to be construed as preferred or advantageous over other embodiments. Likewise, the term "embodiment" of an apparatus, method or article of manufacture does not require that all embodiments of the invention include the described components, structure, features, functionality, processes, advantages, benefits, or modes of operation.

It will be further understood that the terms "comprises" and/or "comprising," when used in this specification, specify the presence of stated features, steps, operations, elements,

and/or components, but do not preclude the presence or addition of one or more other features, integers, steps, operations, elements, components, and/or groups thereof. The term "and/or" includes any and all combinations of one or more of the associated listed items.

Unless otherwise defined, all terms (including technical and scientific terms) used herein have the same meaning as commonly understood by a person having ordinary skill in the art to which this invention belongs. It will be further understood that terms, such as those defined in commonly used dictionaries, should be interpreted as having a meaning that is consistent with their meaning in the context of the relevant art and the present disclosure and will not be interpreted in an idealized or overly formal sense unless expressly so defined herein.

In the following detailed description, various aspects of the present invention will be presented in the context of apparatuses and methods for recovering vehicle license plate information from an image. However, as those skilled in the art will appreciate, these aspects may be extended to recovering other information from an image. Accordingly, any reference to an apparatus or method for recovering vehicle license plate information is intended only to illustrate the various aspects of the present invention, with the understanding that such aspects may have a wide range of applications.

FIG. **1** conceptually illustrates an exemplary embodiment of an apparatus **130** that is capable of capturing an optical image and detecting a license plate **120** from the optical image. The apparatus **130** may be a mobile phone, personal digital assistants (PDA), smart phone, laptop computer, palm-sized computer, tablet computer, game console, media player, digital camera, or any other suitable apparatus. FIG. **1** includes a vehicle **110**, the license plate **120** registered to the vehicle **110**, the apparatus **130**, touch screen **140**, and a user **150**. The apparatus **130**, of some embodiments, may be a wireless handheld device with built in image capture capabilities such as the smart phone, tablet or personal data assistant (PDA) described above. However, in some aspects of the service, the apparatus **130** may be a digital camera capable of processing or transferring data derived from the captured image to a personal computer. The information may then be uploaded from the personal computer to the license plate detection apparatus discussed in the foregoing.

In an exemplary embodiment of the apparatus, a customized application is installed on the apparatus **130**. The customized application may interface with the apparatus' image capture device to capture an optical image, convert the optical image to an electrical signal, process the electrical signal to detect the presence of a license plate image, and derive license plate information from a portion of the electrical signal that is associated with the license plate image. The license plate information may be transmitted wirelessly to a server for further processing or decoding such as optical character recognition (OCR) of the license plate image. Alternatively, the OCR process may be carried out on the mobile apparatus **130**.

As shown in FIG. **1**, the apparatus **130** may receive an interaction from the user **150** to capture an optical image that includes an object image of the license plate **120**. The interaction may occur at the touch screen **140**. The touch screen **140** shows an exemplary rendering of the optical image, including a rendering of the license plate image that may be captured by the apparatus **130**. As illustrated on the touch screen **140**, the image of the license plate **120** may include a number and a state. OCR software may be used to convert the state and number portions of the license plate image to text, which may be stored as strings to be used later for various functions. Once, a suitable image including a license plate image is captured by the apparatus **130**, the license plate data may be recovered and transmitted to a server for further processing. Additionally, the server and/or the apparatus application may provide error checking capability to ensure that the captured image is clear enough to accurately detect and decode a license plate image. When the server or apparatus determines that a suitable image has not been captured, the apparatus **130** may display an alert in the display area **140**, which may guide the user to acquiring a suitable image.

Alternatively, some aspects of the apparatus may provide the capability to bypass the image capture process to instead provide a user interface with text fields. For example, the user interface may provide text fields that allow for entry of the license plate number and state. The entered information may be provided as text strings to the license plate detection apparatus without going through the detection process discussed above.

FIG. **2** illustrates an exemplary embodiment of transmitting license plate information derived from an optical image to an external server **230**. In some aspects of the apparatus, a license plate image may be transmitted after recovering the license plate information from an image **220**. As shown, FIG. **2** includes an apparatus **210**, the image **220**, the server **230**, and the Internet **240**. The apparatus **210** may be a mobile or wireless apparatus. The image **220** may be the same as the image rendered on the display area **140** as illustrated in FIG. **1**.

A license plate image recovered from the image **220** may be transmitted over the internet **240** to the server **230** where it is processed for the purpose of detecting whether the license plate image is suitable for deriving license plate data and/or for performing OCR on the license plate image to derive license plate information such as the state of origin and the license plate number.

Once the license plate image (or image file) is transmitted to the server **230**, the apparatus **210** may receive and display a confirmation message for confirming that the derived license plate information (e.g., state and license plate number) is correct. In some aspects of the apparatus, the apparatus **210** may also display information about the vehicle to help the user determine whether the derived license plate information is correct. This may be useful in cases such as when the apparatus **210** captures a license plate image of a moving vehicle. The vehicle license plate may no longer be in eyesight. However, it may be possible to determine with some degree of accuracy whether the derived license plate information is correct based on the vehicle information that is displayed on the mobile apparatus.

FIG. **3** illustrates an exemplary embodiment of an apparatus **300** for displaying a broadcast radio offer for a vehicle corresponding to a vehicle license plate image. The apparatus **300** includes a display area **310**. The display area **310** includes license plate information **320**, selectable user interface (UI) objects **335**, **340**, **350**, and **370**, vehicle descriptors **345**, and text **330**. FIG. **3** illustrates two stages **301** and **302** of a user's interaction with the apparatus **300**.

In the first stage **301**, the display area may display the license plate information **320** as well as the selectable UI object **370**. Additionally, the display area **310** may optionally display information about the vehicle to which the displayed license plate information **320** is associated. For instance, the display area **310** may display a year, make, model, and/or trim of the vehicle to further help the user identify that the correct vehicle license plate information

was derived. For instance, apparatus **300** may optionally display the vehicle descriptor **345**, which may include a representative image of the vehicle as well as a description of the vehicle features such as the vehicle model, trim, transmission (automatic, manual, CVT, etc.) and other pertinent features. At least the portion of the display area including the vehicle description may be scrollable such that upon receiving a gestural interaction, the apparatus **300** may scroll through the different features that are displayed in at least the portion of the display area **310** that includes the vehicle description.

When the license plate information is correct and viewing an offer for a broadcast radio service, such as satellite radio, is desired by the user of the apparatus **300**, the apparatus **300** may receive a selection of the UI object **370** from the user. Selection of any UI object may be performed by a gestural interaction with a touch screen on the apparatus **300**. Such gestural interactions may include tapping and/or dragging motions.

In the second stage, the apparatus **300** may have received a selection of the selectable UI object **370**. As such, the display area **310** is now displaying the text **330** and the selectable UI objects **335**, **340**, and **350**. As illustrated, the text is provided to prompt the user of the apparatus to select which offers the user would like to view. For instance, the offer may not simply be confined to broadcast radio. Other features may be available for the user to view. Each offer may be viewed when the apparatus **300** receives a selection of one of the selectable objects **335**, **340**, and **350**. Once an offer is displayed, the apparatus **300** may receive user input to start the service. The apparatus **300** may communicate information to start the broadcast radio service or any of the other service offers to the server **230**. The server, as will be discussed in the foregoing sections, may then communicate over an API to the broadcast radio or other service provider to enable the requested service at the vehicle associated with the license plate information. The apparatus may require that the user input certain personal information such as a credit card number, address, and any other necessary information.

The interface described in FIGS. **1-3** provides an easy and efficient way for vehicle owners to gather information about a vehicle based on the license plate information that is recovered. The license plate information may simplify the process of obtaining information about a vehicle as well as offers for different services such as broadcast or satellite radio.

FIG. **4** conceptually illustrates an exemplary embodiment of a process **400** of obtaining a broadcast radio service offer from an optical image. The process **400** may be performed by a mobile apparatus such as the apparatus **130** described with respect to FIG. **1**. The process **400** may begin after an image capture capability or an application is initiated on the mobile apparatus. In some aspects of the process, the application may enable the image capture feature on the mobile apparatus.

As shown, the process **400** captures (at **410**) an optical image that includes a vehicle license plate image. As will be discussing in the following figure, some aspects of the apparatus may process a video. A frame may then be extracted and converted to an image file.

At **420**, the process **400** converts the optical image into an electrical signal. The process **400** then processes (at **430**) the electrical signal to recover license plate information. The process **400** determines (at **440**) whether the license plate information was successfully recovered. When the license plate information was successfully recovered, the process **400** transmits (at **460**) the license plate information to a remote server. The process **400** then receives (at **470**) a broadcast radio service offer corresponding to the vehicle license plate.

Returning to **440**, when the process **400** determines that the license plate information was not successfully recovered, the process **400** displays (at **450**) an alert that the license plate information was not recovered. In some aspects of the process, a message guiding the user to position the mobile apparatus to achieve greater chances of recovering the license plate information may be provided with the displayed alert. The process then ends. However, in some aspects of the process, rather than end, the process may optionally return to capture (at **410**) another optical image and repeat the entire process **400**.

FIGS. **5***a* and **5***b* conceptually illustrate an exemplary embodiment of a process **500** of obtaining a broadcast radio service offer from a video. The process **500** may be performed by a mobile apparatus such as the apparatus **130** described with respect to FIG. **1**. The process **500** may begin after an image and/or video capture capability or an application is initiated on the mobile apparatus. The application may enable the image and/or video capture feature on the mobile apparatus.

As shown, the process **500** converts (at **505**) an optical image into an electrical signal for sampling the electrical signal at n frames/second (fps). In some aspects of the process, the process may sample the electrical signal at intervals such as 24 fps or any other suitable interval for capturing video according to the apparatus' capabilities. Each sample of the electrical signal represents a frame of a video image presented on a display. The process **500** samples (at **510**) a first portion of the electrical signal representing a first frame of the video image presented on the display. The process then determines (at **515**) whether any object image(s) are detected within the frame. At least one of the detected object image(s) may comprise a license plate image. When the process **500** determines that at least object image exists within the frame, the process **500** assigns (at **520**) a score based on the detected object image. The score may be based on the likelihood that at least one of the object images is a license plate image and is discussed in greater detail below with respect to FIGS. **21** and **22**. The score may be applied to each object image and/or aggregated for each object image detected in the frame. The process may then store (at **525**) the score and associated object image and frame information in a data structure. In some aspects of the process, the process **500** may store the aggregated object image score and/or the process **500** may store the highest scoring object image in the frame.

When the process **500** determines (at **515**) that no object image exists within the frame or after the process **500** stores the score (at **525**), the process **500** displays feedback to a user based on the object image detected (or not detected). For instance, when no object image is detected in the frame, the process **500** may display a message guiding the user on how to collect a better optical image. However, when at least one object image is detected in the frame, the process **500** may provide feedback by overlaying rectangles around the detected object image(s). Alternatively or conjunctively, the process **500** may overlay a rectangle that provides a visual cue such as a distinct color, indicating which object image is determined to most likely be a license plate image or has a higher score than other object images within the frame. In some aspects, the visual cue may be provided when a particular object image receives a score above a threshold value.

The process **500** optionally determines (at **535**) whether user input has been received to stop the video. Such user input may include a gestural interaction with the mobile apparatus, which deactivates the camera shutter on the mobile apparatus. When the process **500** determines (at **535**) that user input to stop the video capture is received, the process **500** selects (at **545**) the highest scoring frame according to the stored frame information. When the process **500** determines (at **535**) that user input to stop the video capture has not been received, the process **500** determines (at **540**) whether to sample additional portions of the electrical signal. In some aspects of the process, such a determination may be based on a predetermined number of samples. For instance, the mobile apparatus may have a built in and/or configurable setting for the number of samples to process before a best frame is selected. In other aspects of the process, such a determination may be based on achieving a score for a frame or object image in a frame that is above a predetermined threshold value. In such aspects, the frame or frame comprising the object image that is above the threshold score will be selected (at **545**). When process **500** determines that there are more portions of the electrical signal to be sampled, the process **500** samples (at **550**) the next portion of the electrical signal representing the next frame of the video image presented on the display. The process **500** then returns to detect (at **515**) object image(s) within the next frame. In some aspects of the process, the process may receive user input to stop the video capture at any point while process **500** is running. Specifically, the process is not confined to receiving user input to halt video capture after the feedback is displayed (at **530**); the user input may be received at anytime while the process **500** is running. In such aspects, if at least one object image has been scored, then the process **500** will still select (at **545**) the highest scoring object image. However, if no object images were scored, then the process will simply end.

In some aspects of the process, the process **500** may optionally use the object image(s) detected in the previous sample to estimate the locations of the object images in the sample. Using this approach optimizes processing time when the process can determine that the mobile apparatus is relatively stable. For instance, the mobile apparatus may concurrently store gyro accelerometer data. The process **500** may then use gyro accelerometer data retrieved from the mobile apparatus to determine whether the mobile apparatus has remained stable and there is a greater likelihood that the object image(s) will be in similar locations. Thus, when the process **500** can determine that the mobile apparatus is relatively stable, the processing time for license plate detection may be increased because less of the portion of the electrical signal that represents the video image would need to be searched for the license plate image.

Alternatively or conjunctively, the process **500** may not use information about object image(s) from the previous frame as a predictor. Instead, the process **500** may undergo the same detection and scoring process discussed above. Then, for each object image that overlaps an object image detected in a previous frame (e.g., the object images share similar pixels either by space and/or location in the frames), the previous frame receives a higher score. Information about the overlapping object image(s) may be maintained for optimized processing later on. Additionally, in some aspects of the apparatus, the license plate detection apparatus may maintain a table of matching object image(s) for the sampled portions of the electrical signal representing frames of video images over time. In such aspects, some object image(s) may exist in one or a few of the frames or some may exist in many or all frames and accordingly with higher scores. In such instances, all of the overlapping object images may be processed as discussed in greater detail in the foregoing sections and provided to the server for OCR or identification. This would lead to greater accuracy in actual license plate detection and OCR results.

Returning now to FIGS. **5***a* and **5***b*, after selecting (at **545**) the highest scoring frame, the process **500** processes (at **555**) the electrical signal based on the information associated with the selected frame to recover license plate information. The process **500** then determines (at **560**) whether license plate information was recovered from the electrical signal. When the process **500** determines (at **560**) that license plate information has been recovered, the process **500** transmits (at **570**) the license plate information to a remote server. The process **500** then receives (at **575**) a broadcast radio service offer corresponding to the vehicle license plate in response to the transmission. The process **500** then ends.

Returning to **560**, when the process **500** determines that license plate information was not detected, the process **500** displays (at **565**) an alert that license plate information cannot be recovered. Such an alert may guide the user to acquiring better video that is more likely to produce a readable license plate image. For instance, the alert may guide the user's mobile device position or angle. The process **500** may then return to collect additional video.

FIG. **6** illustrates an exemplary embodiment of a system architecture of a license plate detection apparatus. The plate detection apparatus may be a mobile apparatus such as the apparatus **130** described with respect to FIG. **1** or any other suitable mobile apparatus that has image capture and processing capabilities.

The license plate detection apparatus includes an image capture apparatus **605**, an imager **610**, a keypad **615**, a strobe circuit **685**, a frame buffer **690**, a format converter **620**, an image filter **625**, a license plate detector **630**, a network **635**, a network interfaces **640** and **697**, a gateway **645**, a rendering module **650**, and a display **655**. The license plate detection apparatus may communicate with a server having OCR Module **660**, and an OCR analytics storage **670**. However, in some aspects of the apparatus, the OCR module and/or OCR analytics storage may be part of the mobile apparatus. The license plate detection apparatus illustrated in FIG. **6** generates license plate information **675**, which may be processed by various modules communicatively coupled to the gateway. The processed information may then be used by a broadcast radio service offer module **695**. The broadcast radio service offer module **695** may be used to provide broadcast radio service offers for the vehicle associated with the license plate information **675**.

As shown, the image capture apparatus **605** communicates an optical image to the imager **610**. The image capture apparatus **605** may comprise a camera lens and/or a camera that is built into a mobile apparatus. The imager **610** may comprise a CMOS array, NMOS, CCD, or any other suitable image sensor that converts an optical image into an electrical signal (e.g., raw image data). The electrical signal comprises pixel data associated with the captured image. The amount of pixel data is dependent on the resolution of the captured image. The pixel data is stored as numerical values associated with each pixel and the numerical values indicate characteristics of the pixel such as color and brightness. Thus, the electrical signal comprises a stream of raw data describing the exact details of each pixel derived from the optical image. During the image capture process, the imager **610** may produce a digital view as seen through the image capture apparatus for rendering at the display **655**.

In some aspects of the apparatus, the image capture apparatus **605** may be configured to capture video. In such aspects, a timing circuit, such as the strobe circuit **685**, may communicate with the imager **610**. The strobe circuit **685** may sample (or clock) the imager **610** to produce a sampled electrical signal at some periodicity such as 24-30 fps. The sampled electrical signal may be representative of a frame of video presented on the display **655**. The electrical signal may be provided to the frame buffer **690**. However, the imager **610** may communicate the electrical signal directly to the format converter **620** when a single optical image is captured. When video is captured, the frame buffer may communicate the sample of the electrical signal representative of the frame of video from the frame buffer to the format converter **620**. However, in some aspects of the apparatus, the frame buffer **690** may be bypassed such that the sampled electrical signal is communicated directly to the format converter **620**.

The format converter **620** generates or compresses the raw image pixel data provided in the electrical signal to a standard, space efficient image format. However, in some aspects of the apparatus, the frame buffer **690** and format converter **620** may be reversed such that the sampled electrical signals are converted to a compressed standard video format before buffering. The standard image and/or video format can be read by the following modules of the license plate detection apparatus. However, the following description will assume that the sampled electrical signals are buffered before any such format conversion. The format converter **620** will be described in greater detail in FIG. **7**.

The format converter **620** communicates the standard image file (or image) to the image filter **625**. The image filter **625** performs a variety of operations on the image to provide the optimal conditions to detect a license plate image within the image. Such operations will be described in greater detail in FIG. **8**. However, if the image filter **625** determines that the image is too distorted, noisy, or otherwise in a condition that is unreadable to the point that any filtering of the image will not result in a viable image for plate detection, the image filter **625** will signal to the rendering module **650** to display an alert on the display **655** that the image is not readable. Alternatively, once the image is filtered, ideally the image should be in a state that is optimal for accurate license plate detection. Therefore, the image filter **625** will then communicate the filtered image to the license plate detector **630**.

The plate detector **630** is an integral module of license plate detection apparatus. The plate detector **630** will process the image to detect the presence of a license plate image by implementing several processes which will be described in greater detail in FIG. **9**. The license plate detector may generate overlays such as rectangular boxes around object images it detects as potential or candidate license plate images. The overlays may be transmitted as signals from the license plate detector **630** to the rendering module **650**. The rendering module may instruct the display **655** to display the overlays over the image received from the imager **610** so that the user of the mobile apparatus can receive visual guidance relating to what object images the license plate detection apparatus detects as candidate license plate images. Such information is useful in guiding the user to capture optical images that include the license plate image and provide a higher likelihood of accurate license plate information recovery.

The license plate detector **630** will determine which portion of the image (or electrical signal) is most likely a license plate image. The license plate detector **630** will then transmit only the license plate image portion of the image to the network **635** by way of the network interface **697**. Alternatively, a user may skip the entire image conversion process and using the keypad **615**, key in the license plate information, which is then transmitted over the network **635** by way of the network interface **697**. The network **635** then transmits the license plate image information (or image file) or keyed information to the network interface **640**, which transmits signals to the gateway **645**.

The gateway **645** may transmit the license plate image data to the OCR module **660**. The OCR module **660** derives the license plate information such as state and number information from the license plate image. The OCR module **660** may use several different third party and/or proprietary OCR applications to derive the license plate information. The OCR module **660** may use information retrieved from the OCR analytics storage **670** to determine which OCR application has the greatest likelihood of accuracy in the event that different OCR applications detected different characters. For instance, the OCR analytics storage **670** may maintain statistics collected from the user input received at the apparatus **300** described with respect to FIG. **3**. The OCR module **660** may then select the license plate information that is statistically most likely to be accurate using information retrieved from the analytics storage **670**. The OCR module **660** may then transmit the license plate information **675** as a text string or strings to the gateway **645**, which provides the license plate information **675** to the rendering module **650** through the network interface **640**. The rendering module **650** may then instruct the display **655** to display the license plate information **675**. The display **655** may then display a message similar to the one described with respect to FIG. **3**.

Additionally, the license plate information **675** may be transmitted through the gateway **645** and processed by various modules communicatively coupled to the gateway **645**. The gateway **645** may transmit the processed information to the broadcast radio service offer module **695**. The broadcast radio service offer information may then be transmitted back to the gateway **645** for further processing. Alternatively, or in addition to, the gateway **645** may transmit the broadcast radio service offer information to the rendering module **650** over the network **635**. The rendering module **650** may then instruct the display **655** to display the broadcast radio service offer along with any other information to assist the user of the mobile apparatus.

In the event that the OCR module **660** or the license plate detector **630** is unable to detect a license plate image or identify any license plate information, the OCR module **660** and/or the license plate detector **630** will signal an alert to the rendering module **650**, which will be rendered on the display **655**.

In some aspects of the apparatus, the OCR module **660** may be located on an apparatus separate from an external server. For instance, the OCR module **660** may be located on the mobile apparatus **130** similar to the license plate detection apparatus. Additionally, in some aspects of the apparatus, the format converter **620**, image filter **625**, and license plate detector **630** may be located on an external server and the electrical signal recovered from the optical image may be transmitted directly to the network **635** for processing by the modules on the external server.

The license plate detection apparatus provides several advantages in that it is not confined to still images. As discussed above, buffered or unbuffered video may be used by the license plate detection apparatus to determine the frame with the highest likelihood of having a license plate

image. It also enables optical images to be taken while a mobile apparatus is moving and accounts for object images recovered from any angle and/or distance. Additionally, the license plate detection apparatus also provides the added benefit of alerting the user when a license plate image cannot be accurately detected in addition to guidance relating to how to get a better image that is more likely to produce license plate information. Such guidance may include directional guidance such as adjusting the viewing angle or distance as well as guidance to adjust lighting conditions, if possible. Thus, the license plate detection apparatus provides a solution to the complicated problem of how to derive license plate information captured from moving object images and from virtually any viewing angle. The license plate information may then be used to derive different information associated with the license plate information such as a vehicle's access to a radio broadcasting service.

FIG. **7** illustrates an exemplary embodiment of a diagram of the format converter **620**. The format converter **620** receives the input of an electrical signal that defines an image **720** or an electrical signal that defines a sequence of sampled images such as video frames **725**. The format converter **620** outputs an image file **730** in a standard format such as the formats discussed above with respect to FIG. **1**. The format converter **620** includes a frame analyzer **715** and a conversion engine **710**. When an electrical signal defining an image **720** is received at the format converter **620**, the electrical signal will be read by the conversion engine **710**. The conversion engine **710** translates the pixel data from the electrical signal into a standard, compressed image format file **730**. Such standard formats may include .jpeg, .png, .gif, .tiff or any other suitable image format similar to those discussed with respect to FIG. **1**. In the exemplary instance where the format converter **620** converts video to a standard format, the standard format may include .mpeg, .mp4, .avi, or any other suitable standard video format. Since the electrical signal received at the format converter **620** is raw data which can make for a very large file, the conversion engine may compress the raw data into a format that requires less space and is more efficient for information recovery.

The format converter **620** may also receive a several sampled electrical signals, each representing frames of video images, such as frame data **725**. The video data frames may be received at the frame analyzer **715** in the format converter **620**. The frame analyzer **715** may perform a number of different functions. For instance, the frame analyzer **715** may perform a function of analyzing each frame and discarding any frames that are blurry, noisy, or generally bad candidates for license plate detection based on some detection process such as the process **500** described in FIG. **5**. Those frames that are suitable candidates for license plate detection may be transmitted to the conversion engine **710** and converted to the standard format image **730** similar to how the image **720** was converted.

FIG. **8** illustrates an exemplary embodiment of a diagram of the image filter **625**. The image filter **625** receives a formatted image file that the image filter **625** is configured to read. The image filter **625** outputs a filtered image **840** which may be optimized for more reliable license plate recognition. Alternatively, if the image filter **625** determines that the image is unreadable, the image filter **625** may signal an alert **845**, indicating to the user that the image is unreadable and/or guide the user to capture a better image.

The image filter **625** includes a filter processor **805**, a grayscale filter **810**, and a parameters storage **835**. When the image filter **625** receives the formatted image file **830**, the filter processor **805** will retrieve parameters from the parameters storage **835**, which will assist the filter processor **805** in how to optimally filter the image. For instance, if the received image was taken in cloudy conditions, the filter processor **805** may adjust the white balance of the image based on the parameters retrieved from the parameters storage **835**. If the image was taken in the dark, the filter processor **805** may use a de-noise function based on the parameters retrieved from the parameters storage **835** to remove excess noise from the image. In some aspects of the apparatus, the filter processor **805** also has the ability to learn based on the success of previously derived license plate images what parameters work best or better in different conditions such as those conditions described above. In such aspects, the filter processor **805** may take the learned data and update the parameters in the parameters storage **835** for future use.

The filter processor **805** also has logic to determine if an image will be readable by the license plate detector **630**. When the filter processor **805** determines that the image will not be readable by the license plate detector **630**, the filter processor **805** may signal an alert **845** to the rendering module **650**. However, when the filter processor **805** determines that sufficient filtering will generate a readable image for reliable license plate detection, the filter processor **805** communicates the image, post filtering, to the grayscale filter **810**.

Additionally, in some aspects of the apparatus, the image filter **625** may receive several images in rapid succession. Such instances may be frames of a video that may be captured while a mobile apparatus is moving. In such instances, the filter processor **805** may continuously adjust the filter parameters to account for each video frame, it receives. The same alerts may be signaled in real-time in the event that a video frame is deemed unreadable by the filter processor **805**.

The grayscale filter **810** will convert the received image file to grayscale. More specifically, the grayscale filter will convert the pixel values for each pixel in the received image file **830** to new values that correspond to appropriate grayscale levels. In some aspects of the filter, the pixel values may be between 0 and 255 (e.g., 256 values or 2^8 values). In other aspects of the filter, the pixel values may be between 0 and any other value that is a power of 2 minus 1, such as 1023, etc. The image is converted to grayscale, to simplify and/or speed up the license plate detection process. For instance, by reducing the number of colors in the image, which could be in the millions, to shades of gray, the license plate image search time may be reduced.

In the grayscale image, regions with higher intensity values (e.g., brighter regions) of the image will appear brighter than regions of the image with lower intensity values. The grayscale filter **810** ultimately produces the filtered image **840**. However, one skilled in the art should recognize that the ordering of the modules is not confined to the order illustrated in FIG. **8**. Rather, the image filter may first convert the image to grayscale using the grayscale filter **810** and then filter the grayscale image at the filter processor **805**. The filter processor **805** then outputs the filtered image **840**. Additionally, it should be noted that the image filter **625** and the format converter **620** may be interchangeable. Specifically, the order in which this image is processed by these two modules may be swapped in some aspects of the apparatus.

FIG. **9** illustrates an exemplary embodiment of a diagram of the license plate detector **630**. The license plate detector **630** receives a filtered image **930** and processes the image to determine license plate information **935**, which is may be a

cropped image of at least one license plate image. The license plate detector **630** comprises an object detector **905**, a quad processor **910**, a quad filter **915**, a region(s) of interest detector **920**, and a patch processor **925**. The license plate detector **630** provides the integral function of detecting a license plate image from an image at virtually any viewing angle and under a multitude of conditions, and converting it to an image that can be accurately read by at least one OCR application.

The license plate detector **630** receives the filtered image **930** at the object detector **905**. As discussed above, the filtered image **930** has been converted to a grayscale image. The object detector **905** may use a mathematical method, such as a Maximal Stable Extremal Regions (MSER) method, for detecting regions in a digital image that differ in properties, such as brightness or color, compared to areas surrounding those regions. Simply stated, the detected regions of the digital image have some properties that are constant or vary within a pre-described range of values; all the points (or pixels) in the region can be considered in some sense to be similar to each other. This method of object detection may provide greater accuracy in the license plate detection process than other processes such as edge and/or corner detection. However, in some instances, the object detector **905** may use edge and/or corner detection methods to detect object images in an image that could be candidate license plate images.

Typically, the object images detected by the object detector **905** will have a uniform intensity throughout each adjacent pixel. Those adjacent pixels with a different intensity would be considered background rather than part of the object image. In order to determine the object images and background regions of the filtered image **930**, the object detector **905** will construct a process of applying several thresholds to the image. Grayscale images may have intensity values between 0 and 255, 0 being black and 255 being white. However, in some aspects of the apparatus, these values may be reversed with 0 being white and 255 being black. An initial threshold is set to be somewhere between 0 and 255. Variations in the object images are measured over a pre-determined range of threshold values. A delta parameter indicates through how many different gray levels a region needs to be stable to be considered a potential detected object image. The object images within the image that remain unchanged, or have little variation, over the applied delta thresholds are selected as likely candidate license plate images. In some aspects of the detector, small variations in the object image may be acceptable. The acceptable level of variations in an object image may be programmatically set for successful object image detection. Conversely or conjunctively, the number of pixels (or area of the image) that must be stable for object image detection may also be defined. For instance, a stable region that has less than a threshold number of pixels would not be selected as an object image, while a stable region with at least the threshold number of pixels would be selected as an object image. The number of pixels may be determined based on known values relating to the expected pixel size of a license plate image or any other suitable calculation such as a height to width ratio.

In addition, the object detector **905** may recognize certain pre-determined textures in an image as well as the presence of informative features that provide a greater likelihood that the detected object image may be a license plate image. Such textures may be recognized by using local binary patterns (LBP) cascade classifiers. LBP is especially useful in real-time image processing settings such as when images are being captured as a mobile apparatus moves around an area. Although commonly used in the art for image facial recognition, LBP cascade classifiers may be modified such that the method is optimized for the detection of candidate license plate images.

In an LBP cascade classification, positive samples of an object image are created and stored on the license plate detection apparatus. For instance, a sample of a license plate image may be used. In some instances multiple samples may be needed for more accurate object image detection considering that license plates may vary from state to state or country to country. The apparatus will then use the sample object images to train the object detector **905** to recognize license plate images based on the features and textures found in the sample object images. LBP cascade classifiers may be used in addition to the operations discussed above to provide improved detection of candidate license plate images.

Once the object detector **905** has detected at least one object as a candidate license plate image, the object detector **905** will pass information relating to the detected object images to the quad processor **910** and/or the quad filter **915**. In some aspects of the detector, the object images may not be of a uniform shape such as a rectangle or oval. The quad processor **910** will then fit a rectangle around each detected object image based on the object image information provided by the object detector **905**. Rectangles are ideal due to the rectangular nature of license plates. As will be described in the foregoing, information about the rectangles may be used to overlay rectangles on object images that are displayed for the user's view on a mobile apparatus.

The rectangle will be sized such that it fits minimally around each object image and all areas of the object image are within the rectangle without more additional background space than is necessary to fit the object image. However, due to various factors such as the angle at which the optical image was taken, the license plate image may not be perfectly rectangular. Therefore, the quad processor **910** will perform a process on each object image using the rectangle to form a quadrilateral from a convex hull formed around each object image.

The quad processor **910** will use an algorithm that fits a quadrilateral as closely as possible to the detected object images in the image. For instance, the quad processor **910** will form a convex hull around the object image. A convex hull is a polygon that fits around the detected object image as closely as possible. The convex hull comprises edges and vertices. The convex hull may have several vertices. The quad processor **910** will take the convex hull and break it down to exactly four vertices (or points) that fit closely to the object image.

FIGS. **10-12** illustrate the functionality of the quad processor **910**. As shown, FIG. **10** illustrates an exemplary embodiment of an object image **1005** with a convex hull **1010** fit around the object image **1005**, and a blown up region **1015**. The convex hull **1010** comprises several edges and vertices including vertices A-D. In order to fit the object image **1005** into a quadrilateral, the convex hull **1010** may be modified such that only 4 vertices are used. For instance, as illustrated in FIG. **11**, for each adjacent pair of points A-D in the convex hull **1010**, the quad processor **910** will find a new point Z that maintains convexity and enclosure of the object image when B and C are removed. Point Z is chosen as a point that provides a minimal increase to the hull area and does not go outside of the originally drawn rectangle (not shown). Thus, FIG. **11** illustrates an exemplary embodiment of a method for forming a quadrilateral (shown in FIG. **12**) from the convex hull **1010**. The process repeats for each

set of 4 points until the convex hull **1010** is compressed to only four vertices as illustrated in FIG. **12**.

FIG. **12** illustrates an exemplary embodiment of the object image **1005** enclosed in a quadrilateral **1210**. As shown in FIG. **12**, Quadrilateral **1210** fits as closely to the object image **1005** as possible without any edge overlapping the object image **1005**. Fitting a quadrilateral closely to an object image as illustrated by the FIGS. **10-12** provides the benefit of greater efficiency in the license plate detection process. As will be described below, the license plate detection apparatus will only search the portions of the image within the quadrilaterals for the presence of a license plate image.

Referring back to FIG. **9**, now that the quad processor **910** has drawn efficient quadrilaterals around each of the detected object images, the coordinates of the quadrilaterals are passed to the quad filter **915** and/or the region(s) of interest detector **920**. As discussed above, the license plate detection apparatus first overlays rectangles around each detected object image. The quad filter **915** may use the rectangle information (rather than the quadrilateral information) received from the object detector **905**, such as the pixel coordinates of the rectangles in the image, and look for rectangles similar in size and that overlap. The quad filter **915** will then discard the smaller rectangle(s), while maintaining the biggest. If at least two rectangles are of an identical size and overlap, the quad filter **915** will use a mechanism to determine which rectangle is more likely to be a full license plate image and discard the less likely image within the other rectangle(s). Such mechanisms may involve textures and intensity values as determined by the object detector **905**. In some aspects of the filter, rather than searching only rectangles, the quad filter **915** may alternatively or additionally search the quadrilateral generated by the quad processor **910** for duplicates and perform a similar discarding process. By filtering out the duplicates, only unique object images within the rectangles will remain, with the likelihood that at least one of those object images is a license plate image. Thus, at this point, the license plate detection apparatus will only need to search the areas within the rectangles or quadrilaterals for the license plate image.

The region(s) of interest detector **920** will then determine which of the object images are actually object images that that have similar proportions (e.g., height and width) to the proportions that would be expected for a license plate image. For instance, typically a license plate is rectangular in shape. However, depending on several factors such as the angle that the license plate image was captured, the object image may appear more like a parallelogram or trapezoid. However, there is a limit to how much skew or keystone (trapezoidal shape) a license plate image undergoes before it becomes unreadable. Therefore, it is necessary to compute a skew factor and/or keystone to determine whether the object image may be a readable license plate image. Specifically, object images that have a skew factor and/or keystone below and/or above a threshold value are likely object images that do not have the proportions expected for a license plate image or would likely be unreadable. Since a license plate has an expected proportion a threshold skew factor and/or keystone may be set and any detected object image that has a skew factor and/or keystone indicating that the object image is not a readable license plate image will be discarded. For instance, license plate images with a high skew and/or high keystone may be discarded.

In some aspects of the apparatus, the skew and keystone thresholds may be determined by digitally distorting known license plate images with varying amounts of pitch and yaw to see where the identification process and/or OCR fails. The threshold may also be dependent on the size of the object image or quadrilateral/trapezoid. Thus, quadrilaterals or trapeziods must cover enough pixel space to be identified and read by the OCR software. Those that do not have a large enough pixel space, skew factors that are too high, and/or keystones that are too high would then be discarded as either being unlikely candidates for license plate images or unreadable license plate images.

The skew factor is computed by finding the distance between opposing vertices of the quadrilateral and taking the ratio of the shorter distance to the longer distance so that the skew factor is less than or equal to 1. Rectangles and certain parallelograms that are likely candidate license plate images will have a skew factor that is close to 0, while skewed parallelograms will have a high skew factor. Additionally, trapezoids that are likely candidate license plate images will have a keystone that is close to 0, while trapezoids that are unlikely candidate license plate images will have a high keystone. Therefore, object images with a high skew factor are discarded, while the parallelograms with a lower skew factor and trapezoids with a lower keystone are maintained. In some aspects of the apparatus, a threshold skew and a threshold keystone may be defined. In such aspects, parallelograms having a skew factor below the threshold are maintained while those above the threshold are discarded. Similarly, in such aspects, trapezoids having a keystone below the threshold are maintained while those above the threshold are discarded. When the value is equal to the threshold, the parallelogram or trapezoid may be maintained or discarded depending on the design of the apparatus.

The remaining parallelograms and trapezoids are then dewarped. The dewarping process is particularly important for the trapezoids because it is used to convert the trapezoid into a rectangular image. The dewarping process uses the four vertices of the quadrilateral and the 4 vertices of an un-rotated rectangle with an aspect ratio of 2:1 (width: height), or any other suitable license plate aspect ratio, to computer a perspective transform. The aspect ratio may be pixel width:pixel height of the image. The perspective transform is applied on the region around the quadrilateral and the 2:1 aspect ratio object image is cropped out. The cropped object image, or patch, is an object image comprising a candidate license plate image.

The patch is then provided to the patch processor **925**, which will search for alpha numeric characters in the patch, find new object images within the patch, fit rectangles around those object images, and compute a score from the fit rectangles. The score may be based on a virtual line that is drawn across the detected object images. If a line exists that has a minimal slope, the object images on that line may receive a score that indicates the object image is highly likely to be a license plate image. If no line with a minimal slope is detected, then an alert may be returned to the rendering module that a license plate image was not detected in the image. Scores may be calculated for several different patches from the same image and it follows that more than one license plate image may be detected in the same image. Once, the presence of a license plate image is detected, the license plate information **935** may be transmitted to a server for OCR and further processing. In some aspects of the apparatus, the license plate information is an image file comprising the license plate image. Additionally, the process for scoring the patch will be described in more detail with respect to FIG. **21**.

FIG. **13** illustrates an exemplary embodiment of a diagram of the rendering module **650**. The rendering module

650 may receive as input alert information from the image filter 1335, or information about detected object images from the license plate detector 1330. The rendering module will then communicate rendering instructions 1340 to the display 655. The rendering module 650 includes an overlay processor 1305, a detection failure engine 1310, and an image renderer 1315.

The overlay processor 1305 receives information about the detected object images 1330 from the license plate detector 630. As discussed above, such information may include coordinates of detected object images and rectangles determined to fit around those object images. The rectangle information is then provided to the detection failure engine 1310, which will determine that object images have been detected by the license plate detector 630. The detection failure engine 1310 may then forward the information about the rectangles to the image renderer 1315, which will provide rendering instructions 1340 to the display for how and where to display the rectangles around the image received from the imager 610. Such information my include pixel coordinates associated with the size and location of the rectangle and color information. For instance, if the license plate detector 630 determines that a detected object image is more likely to be an actual license plate image than the other detected object images, the rendering module 650 may instruct the display 655 to display the rectangle around the more likely object image in a way that is visually distinct from other rectangles. For instance, the rectangle around the object image more likely to be a license plate image may be displayed in a different color than the other rectangles in the display.

However, in some instances, the license plate detector 630 may not detect any object images. In such instances, the overlay processor will not forward any rectangle information to the detection failure engine 1310. The detection failure engine 1310 will then determine there has been an object image detection failure and signal an alert to the image renderer 1315. The image renderer 1315 will then communicate the display rendering instructions 1340 for the alert to the display 655. The license plate detection alerts have been described in greater detail above.

Additionally, the image filter 625 may provide information to the image renderer 1315 indicating an alert that the captured image cannot be processed for some reason such as darkness, noise, blur, or any other reason that may cause the image to be otherwise unreadable. The alert information from the image filter 625 is provided to the image renderer 1315, which then provides the rendering display instructions 1340 to the display 655 indicating how the alert will be displayed. The image filter alerts have been discussed in detail above.

The following FIGS. 14-22 provide exemplary illustrations and processes detailing the functionality of the license plate detection module 630. FIGS. 14-22 are devised to illustrate how the license plate detection apparatus goes from an optical image comprising many object images to detecting a license plate image among the object images.

FIG. 14 illustrates an exemplary embodiment of a scene 1400 that may be captured by a mobile apparatus 1410. The mobile apparatus 1410 may be similar to the mobile apparatus 130 described with respect to FIG. 1. The scene 1400 includes a structure 1425, a road 1430, a vehicle 1420, and a license plate 1405. The mobile apparatus 1410 includes a display area 1415.

As illustrated, the mobile apparatus 1410 has activated the image capture functionality of the mobile apparatus 1410. The image capture functionality may be an application that controls a camera lens and imager built into the apparatus 1410 that is capable of taking digital images. In some aspects of the apparatus, the image capture functionality may be activated by enabling an application which activates the license plate detection apparatus capabilities described in FIG. 6. In this example, the mobile apparatus 1410 may be capturing a still image, several images in burst mode, or video, in real-time for processing by the license plate detection apparatus. For instance, the vehicle 1420 may be moving while the image capture process occurs, and/or the mobile apparatus may not be in a stationary position. In such instances, the license plate detection apparatus may determine the best video frame taken from the video.

FIG. 15 provides a high level illustration of an exemplary embodiment of how an image may be rendered on an apparatus 1500 by the license plate detection apparatus and transmission of a detected license plate image to a server 1550. As shown, the apparatus 1500 includes a display area 1515 and an exploded view 1555 of the image that is rendered in display area 1515. The exploded view 1555 includes object images 1525, rectangles 1520 that surround the object images, overlapping rectangles 1530, candidate license plate image 1505, and a rectangle 1510 that surrounds the candidate license plate image 1505. In the event that a license plate image is detected and captured in the display area 1515, the apparatus 1500 may wirelessly transmit license plate image data 1535 over the Internet 1540 to a server 1550 for further processing. In some aspects of the apparatus, the license plate image data may be an image file comprising a license plate image.

As shown in exploded view 1555, the object detector 905 of the license plate detection apparatus has detected several object images 1525, as well as a candidate license plate image 1505. As shown, the rendering module 650 has used information communicated from the license plate detector 630 to overlay rectangles around detected object images 1525 including the candidate license plate image 1505. The rendering module 650 has also overlaid rectangles that differ in appearance around object images that are less likely to be license plate images. For instance, rectangles 1520 appear as dashed lines, while rectangle 1510 appears as a solid line. However, as those skilled in the art will appreciate, the visual appearance of the rectangles is not limited to only those illustrated in exploded view 1555. In fact, the visual appearance of the rectangles may differ by color, texture, thickness, or any other suitable way of indicating to a user that at least one rectangle is overlaid around an object image that is more likely to be a license plate image than the other object images in which rectangles are overlaid.

Exploded view 1555 also illustrates overlapping rectangles 1530. As discussed above, the quad filter 915 of the license plate detector 630 may recognize the overlapping rectangles 1530 and discard some of the rectangles, and detected object images within those discarded rectangles, as appropriate.

As is also illustrated by FIG. 15, the license plate detection apparatus has detected the presence of a candidate license plate image 1505 in the image. As a result, the mobile apparatus 1500 will transmit the license plate image data 1535 associated with the license plate image over the internet 1540 to the server 1550 for further processing. Such further processing may include OCR and using the license plate information derived from the OCR process to perform a number of different tasks that may be transmitted back to the mobile apparatus 1500 for rendering on the display area 1515. Alternatively, in some aspects of the apparatus, the OCR capability may be located on the mobile apparatus

1500 itself. In such aspects, the mobile apparatus may wirelessly transmit the license plate information such as state and number data rather than information about the license plate image itself.

FIG. **16** conceptually illustrates an exemplary embodiment of a more detailed process **1600** for processing an electrical signal to recover license plate information as discussed at a high level in process **400**. The process may also be applied to detecting license plate information in a sample of an electrical signal representing a frame of a video image presented on a display as described in process **500** of FIG. **5**. The process **1600** may be performed by the license plate detection apparatus. The process **1600** may begin after the mobile apparatus has activated an application, which enables the image capture feature of a mobile apparatus.

As shown, the process **1600** converts (at **1610**) the captured image to grayscale. As discussed above, converting the image to grayscale makes for greater efficiency in distinguishing object images from background according to the level of contrast between adjacent pixels. Several filtering processes may also be performed on the image during the grayscale conversion process. The process **1600** then detects (at **1615**) object image(s) from the grayscale image. Such object images may be the object images **1505** and **1525** as illustrated in FIG. **15**. The process **1600** processes (at **1620**) a first object image. The processing of object images will be described in greater detail in the foregoing description.

At **1625**, the process **1600** determines whether an object image fits the criteria for a license plate image. When the object image fits the criteria for a license plate image, the process **1600** transmits (at **1630**) the license plate image (or image data) to a server such as the server **1550**. In some aspects of the process, an object image fits the criteria for a license plate when a score of the object image is above a threshold value. Such a score may be determined by a process which will be discussed in the foregoing description. The process **1600** then determines (at **1635**) whether there are more object images detected in the image and/or whether the object image being processed does not exceed a threshold score.

When the process **1600** determines (at **1625**) that an object image does not fit the criteria for a license plate image, the process **1600** does not transmit any data and determines (at **1635**) whether more object images were detected in the image and/or whether the object image being processed did not exceed a threshold score. When the process **1600** determines that more object images were detected in the image and/or the object image being processed did not exceed a threshold score, the process **1600** processes (at **1640**) the next object image. The process then returns to **1625** to determine if the object image fits the criteria of a license plate image.

When the process **1600** determines (at **1635**) that no more object images were detected in the image and/or the object image being processed exceeds a threshold score, the process **1600** determines (at **1645**) whether at least one license plate image was detected in the process **1600**. When a license plate image was detected, the process ends. When a license plate image was not detected, an alert is generated (at **1650**) and the rendering module **650** sends instructions to display a detection failure message at the display **655**. In some aspects of the process, the detection failure alert may provide guidance to the user for capturing a better image. For instance, the alert may guide the user to move the mobile apparatus in a particular direction such as up or down and/or adjust the tilt of the mobile apparatus. Other alerts may guide the user to find a location with better lighting or any other suitable message that may assist the user such that the license plate detection apparatus has a greater likelihood of detecting at least one license plate image in an image.

The process **1600** may be performed in real-time. For instance, the process **1600** may be performed successively as more images are captured either by capturing several frames of video as the mobile apparatus or object images in the scene move and/or are tracked or by using an image capture device's burst mode. The process **1600** provides the advantage of being able to detect and read a license plate image in an image at virtually any viewing angle and under a variety of ambient conditions. Additionally, the criteria for determining a license plate image is determined based on the operations performed by the license plate detector. These operations will be further illustrated in the following figures as well.

FIGS. **17-19** illustrate the operations performed by the quad processor **910**. For instance, FIG. **17** illustrates an exemplary embodiment of an image **1700** comprising a license plate image **1710**. Although not shown, the license plate may be affixed to a vehicle which would also be part of the image. The image **1700** includes the license plate image **1710** and a rectangle **1705**. As shown in exemplary image portion **1700**, an object image has been detected by the object detector **905** of the license plate detector **630**. The object image in this example is the license plate image **1710**. After the object image was detected, the quad processor **910** fit a rectangle **1705** around the license plate image **1710**. Information associated with the rectangle may be provided to the rendering module **650** for overlaying a rectangle around the detected license plate image in the image displayed on the display **655**.

FIG. **18** illustrates an exemplary embodiment of a portion of an image **1800** comprising the same license plate image **1710** illustrated in FIG. **17**. Image portion **1800** includes the license plate image **1810** and a quadrilateral **1805**. As discussed above with respect to FIGS. **10-12**, the quad processor **910** of the license plate detector **630** performs several functions to derive a quadrilateral that closely fits the detected object image. Once the quadrilateral has been derived, the quad processor **910** then computes the skew factor and/or keystone discussed above.

Once the quadrilateral is determined to have a low skew (or a skew below a threshold value) or the trapezoid has been determined to have a low keystone (or a keystone below a threshold value), the region(s) of interest detector **920** can dewarp the image to move one step closer to confirming the presence of a license plate image in the image and to also generate patch that is easily read by OCR software. In some aspects of the apparatus, the patch is the license plate image that has been cropped out of the image.

FIG. **19** is an exemplary embodiment of the dewarping process being performed on a license plate image **1905** to arrive at license plate image **1910**. FIG. **19** illustrates two stages **1901** and **1902** of the dewarping process.

As shown, the first stage **1901** illustrates the license plate image **1905** in a trapezoidal shape similar to the shape of the quadrilateral **1805** illustrated in FIG. **18**. The second stage **1902** illustrates the license plate image **1910** after the dewarping process has been performed. As shown, license plate image **1910** has undergone a perspective transform and rotation. The license plate image **1910** as shown in the second stage **1902** is now in a readable rectangular shape. In some aspects of the dewarping process, the license plate image may also undergo corrections if the license plate image is skewed or may scale the license plate image to a suitable size.

The ability to accurately dewarp quadrilaterals and especially the quadrilaterals that are license plate images taken at any angle is an integral piece of the license plate detection apparatus. The dewarping capability enables a user to capture an image of a license plate at a variety of different angles and distances. For instance, the image may be taken with any mobile apparatus at virtually any height, direction, and/or distance. Additionally, it provides the added benefit of being able to capture a moving image from any position. Once the license plate image has been dewarped, the region(s) of interest detector **920** will crop the rectangular license plate image to generate a patch. The patch will be used for further confirmation that the license plate image **1910** is, in fact, an image of a license plate.

FIG. **20** conceptually illustrates an exemplary embodiment of a process **2000** for processing an image comprising a license plate image. The process **2000** may be performed by a license plate detection apparatus. The process **2000** may start after the license plate detection apparatus has instantiated an application that enables the image capture feature of a mobile apparatus.

As shown, the process **2000** detects (at **2010**) at least one object image, similar to the object image detection performed by process **1600**. The following describes in greater detail the process of processing (at **1620**) the image.

For instance, the process **2000** then fits (at **2015**) a rectangle to each detected object image in order to reduce the search space to the detected object images. The information associated with the rectangle may also be used as an overlay to indicate to users of the license plate detection apparatus the location(s) of the detected object image(s). The process then uses the rectangles to form (at **2020**) a convex hull around each object image. The convex hull, as discussed above, is a polygon of several vertices and edges that fits closely around an object image without having any edges that overlap the object image.

At **2025**, the process **2000** compresses the convex hull to a quadrilateral that closely fits around the detected object image. The process of compressing the convex hull into a quadrilateral was discussed in detail with respect to FIGS. **9-12**. The process **2000** then filters (at **2030**) duplicate rectangles and/or quadrilaterals. In some aspects of the process, rectangles or quadrilaterals that are similar in size and overlap may be discarded based on some set criteria. For example, the smaller rectangle and/or quadrilateral may be discarded.

The process **2000** calculates (at **2035**) a skew factor. The process **2000** then dewarps (at **2040**) the quadrilateral. The process then crops (at **2045**) the object image within the quadrilateral, which becomes the patch. The patch will be used for further processing as discussed below. In some aspects of the process, the object image is cropped at a particular ratio that is common for license plates of a particular region or type. For instance, the process may crop out a 2:1 aspect ratio patch, of the image, which is likely to contain the license plate image. Once the quadrilateral is cropped, the process **2000** then ends.

FIG. **21** illustrates an exemplary embodiment of a diagram that determines whether a patch **2100** is an actual license plate image. The patch **2100** includes a candidate license plate image **2105**, alpha-numeric characters **2120** and **2140**, rectangles **2115**, sloped lines **2130**, zero-slope line **2110**, and graphic **2125**.

As shown in the patch **2100**, rectangles are fit around detected object images within the patch. In some aspects of the apparatus, object images may be detected using the MSER object detection method. Conjunctively or conversely, some aspects of the apparatus, may use edge and or corner detection methods to detect the object images. In this case, the detected object images are alpha-numeric characters **2120** and **2140** as well as graphic **2125**. After detecting the alpha-numeric characters **2120** and **2140** as well as graphic **2125**, a stroke width transform (SWT) may be performed to partition the detected object images into those that are likely from an alpha-numeric character and those that are not. For instance, the SWT may try to capture the only alpha-numeric effective features and use certain geometric signatures of alpha-numeric characters to filter out non-alpha-numeric areas, resulting in more reliable text regions. In such instances, the SWT transform may partition the alphanumeric characters **2120** and **2140** from the graphic **2125**. Thus, only those object images that are determined to likely be alpha-numeric characters, such as alphanumeric characters **2120** and **2140**, are later used in a scoring process to be discussed below. In some aspects of the apparatus, some object images other than alpha-numeric characters may pass through the SWT partitioning. Thus, further processing may be necessary to filter out the object images that are not alpha-numeric characters and also to determine whether the alpha-numeric characters in the license plate image fit the characteristics common for a license plate images.

Following the partitioning of alpha-numeric characters from non-alpha numeric characters, a line is fit to the center of the rectangle pair for each pair of rectangles. For instance, a sloped line is shown for the D and object image **2125** pair. The distance of all other rectangles to the lines **2130** and **2110** are accumulated and the pair with the smallest summed distance is used as a text baseline. For instance, the zero-slope line **2110** has the smallest summed distance of the rectangles to the line **2110**. Some aspects of the apparatus may implement a scoring process to determine the presence of a license plate image. For instance, some aspects of the scoring process may determine a score for the determined alpha-numeric characters on the zero-slope line **2110**. The score may increase when the rectangle around the alpha-numeric character is not rotated beyond a threshold amount. The score may decrease if the detected alpha-numeric character is too solid. In some aspects of the scoring process, solidity may be defined as the character area/rectangle area. When the calculated area is over a threshold amount, then the detected object image may be deemed too solid and the score decreases.

In other aspects of the scoring process, for each rectangle **2115** in the patch **2100** the patch score increases by some scoring value if the center of the rectangle is within a particular distance of the baseline line where X is the shorter of the rectangle height and width. For instance, if the particular distance were to be defined as the shorter of the rectangle height and width and if the scoring value is set at 1, the patch score value of the patch **2100** would be 7 because the rectangles around the characters "1DDQ976" are within a shorter distance than the width of the rectangle. Furthermore, the zero-slope of the line **2110** between the alpha-numeric characters **2120** further confirm that this patch is likely a license plate image since typically license plates have a string of characters along a same line. Sloped lines **2130** are, therefore, unlikely to provide any indication that the patch is a license plate image because the distance between characters is too great and the slope is indicative of a low likelihood of a license plate image. Accordingly, in some aspects of the process, sloped lines **2130** are discarded in the process.

In some aspects of the process, when the patch has a score above a threshold value, the patch is determined to be a license plate image, and the license plate detection is complete. The license plate image data is then transmitted to a server for further processing and for use in other functions computed by the server, the results of which are provided to the license plate detection apparatus.

FIG. **22** conceptually illustrates an exemplary embodiment of a process **2200** for processing a patch comprising a candidate license plate image such as patch **2100**. The process may be performed by the license plate detection apparatus. The process may begin after a patch has been cropped from an image file.

As shown, the process **2200** processes (at **2205**) only substantially rectangular portion(s) of the patch to locate alpha-numeric characters. The process **2200** fits (at **2210**) rectangles around the located alpha-numeric characters and computes scores based on the distances between rectangle pairs as discussed above with respect to FIG. **21**. The process **2200** selects (at **2215**) the patch with the best score to recognize as a license plate image. Alternatively or conjunctively, the process **2200** may select all patches that have a score above a threshold level to be deemed as license plate images. In such instances, multiple patches, or instances of license plate information, would be transmitted to the server for further processing.

FIG. **23** illustrates an exemplary embodiment of an operating environment **2300** for communication between a gateway **2395** and client apparatuses **2310**, **2330**, and **2370**. In some aspects of the service, client apparatuses **2310**, **2330**, and **2370** communicate over one or more wired or wireless networks **2340** and **2360**. For example, wireless network **2340**, such as a cellular network, can communicate with a wide area network (WAN) **2380**, such as the internet, by use of mobile network gateway **2350**. A mobile network gateway in some aspects of the service provides a packet oriented mobile data service or other mobile data service allowing wireless networks to transmit data to other networks, such as the WAN **2380**. Likewise, access device **2360** (e.g., IEEE 802.11b/g/n wireless access device) provides communication access to the WAN **2380**. The apparatuses **2310**, **2330**, and **2370** can be any portable electronic computing apparatus capable of communicating with the gateway **2395**. For instance, the apparatuses **2310** and **2370** may have an installed application that is configured to communicate with the gateway **2395**. The apparatus **2330** may communicate with the gateway **2395** through a website having a particular URL. Alternatively, the apparatus **2330** may be a non-portable apparatus capable of accessing the internet through a web browser.

In order to process the license plate information to provide a broadcast radio service offer for the vehicle associated with the license plate information, the gateway **2395** may also communicate with third party services that provide radio broadcast services from vehicle related information that may be derived from the license plate information. As shown, the gateway **2395** may communicate directly with at least one third party processing service **2390** if the service is located on the same network as the gateway **2395**. Alternatively, the gateway **2395** may communicate with at least one of the third party processing services **2390** over the WAN **2380** (e.g., the internet).

In some aspects of the service, the process of providing broadcast radio service offer for the vehicle associated with the license plate information may incorporate the location with the vehicle. In such aspects, the service may use location information acquired through a global positioning service (GPS) satellite **2320**. The apparatuses **2310** and **2370** may be configured to use a GPS service and provide location information to the gateway **2395** using the connections discussed above. The provided location information may be used by the gateway **2395** for processing additional information relating to broadcast radio services and/or other services that may or may not be available in certain geographic locations.

FIG. **24** illustrates an exemplary embodiment of data flow between a gateway **2400** and various other modules. The gateway **2400** and modules **2410-2460** may be located on a server such as the server **230**. In some aspects of the data apparatus, the gateway **2400** may be a request router in that it receives requests from the various modules **2410-2460** and routes the requests to at least one of the appropriate module **2410-2460**. The gateway **2400** communicates with various modules **2410-2460**, which may communicate with various third party services to retrieve data that enables the gateway **2400** to provide a radio broadcasting service offer to a client apparatus **2470** from an image of a license plate.

As shown, the client apparatus **2470**, may use a network interface **2460** to transmit at least one license plate image recovered from an optical image taken by the client apparatus **2470**. The client apparatus **2470** may include an installed application providing instructions for how to communicate with the gateway **2400** through the network interface **2460**. In this example, the network interface **2460** provides license plate image information or text input of a license plate to the gateway **2400**. For instance, as discussed above, the network interface **2460** may transmit text strings received as user input at the client apparatus **2470** or a license plate image processed by the client apparatus **2470** to the gateway **2400**. As further shown in this example, the gateway **2400** may route the license plate image information to the OCR module **2410** to perform the OCR text extraction of the license plate information. In this example, the OCR module **2410** may have specialized or a commercial OCR software application installed that enables accurate extraction of the license plate number and state. The OCR module may be similar to the OCR module discussed in FIG. **6**. In one example, the OCR module **2410** may also have the capability of determining if a license plate image contains a clear enough image that will provide for accurate text extraction. In this example, if the license plate image does not contain a clear image or the image quality is too low, the OCR module may alert the gateway **2400** to transmit a warning to the client apparatus **2470**. In an alternative example, a license plate image may be recovered and transmitted to the gateway **2400** for further processing.

Once the license plate number and state information is extracted and converted to text strings, the gateway **2400** will provide the extracted text to a translator **2420**, which is capable of determining a VIN from the license plate information. The translator **2420** may communication with third party services using functionality provided in an application programming interface (API) associated with the third party services. Such services may retrieve VINs from license plate information. In some aspects of the service, the various modules **2410-2450** may also be configured to communicate with the third party services or apparatuses (not shown) using APIs associated with the third party services. In such aspects of the service, each module **2410-2450** may route a request through the gateway **2400** to the network interface **2460**, which will communicate with the appropriate third party service (not shown).

The gateway **2400** then routes the retrieved VIN to the broadcast radio service offer module **2450**. The broadcast

radio service offer module **2450** may first verify which services the vehicle associated with the license plate information is capable of receiving. For instance, if a particular vehicle is too old, it may not be prewired for satellite radio. Thus, the broadcast radio service offer module would not return any satellite radio offer options. However, if the vehicle is prewired to receive satellite transmissions, the broadcast radio service offer module may return several different offers to be displayed at the mobile apparatus **2470**.

FIG. **25** conceptually illustrates an exemplary embodiment of a process **2500** for transmitting a broadcast radio service offer for a vehicle associated with a license plate image. In some aspects of the process, the process **2500** is also capable of obtaining the broadcast radio service offer from user entered text input of vehicle license plate information received from the mobile apparatus. The process **2500** may be performed by a server such as the server **230**. The process may begin after a mobile apparatus has recovered a suitable license plate image for transmission to the server.

As shown, the process **2500** receives (at **2510**) license plate image information or text input from a mobile apparatus. The text input may be information associated with a vehicle license plate such as a state and alpha-numeric characters. The process **2500** then requests (at **2530**) a VIN associated with the license plate information. The process **2500** may request the VIN by sending the request to a third party server. In some aspects of the system, the process communicates with the third party server by using an API.

At **2540**, the process **2500** receives the VIN associated with the license plate information. The process **2500** then determines (at **2550**) whether the vehicle is prewired for satellite (or broadcast radio service). When the process **2500** determines (at **2550**) that the vehicle is not prewired for satellite radio the process ends. When the process **2500** determines (at **2550**) that the vehicle is prewired for satellite radio, the process **2500** requests (at **2580**) a broadcast radio service offer associated with the license plate image data. The process **2500** receives (at **2585**) a broadcast radio service offer for a vehicle associated with the license plate image data. The process **2500** transmits (at **2590**) the broadcast radio service offer for the vehicle associated with the license plate image data. The broadcast radio service offer may be received and displayed at a mobile apparatus such as mobile apparatus **300** described with respect to FIG. **3**.

FIG. **26** illustrates an exemplary embodiment of a system **2600** that may implement the license plate detection apparatus. The electronic system **2600** of some embodiments may be a mobile apparatus. The electronic system includes various types of machine readable media and interfaces. The electronic system includes a bus **2605**, processor(s) **2610**, read only memory (ROM) **2615**, input device(s) **2620**, random access memory (RAM) **2625**, output device(s) **2630**, a network component **2635**, and a permanent storage device **2640**.

The bus **2605** communicatively connects the internal devices and/or components of the electronic system. For instance, the bus **2605** communicatively connects the processor(s) **2610** with the ROM **2615**, the RAM **2625**, and the permanent storage **2640**. The processor(s) **2610** retrieve instructions from the memory units to execute processes of the invention.

The processor(s) **2610** may be implemented with one or more general-purpose and/or special-purpose processors. Examples include microprocessors, microcontrollers, DSP processors, and other circuitry that can execute software. Alternatively, or in addition to the one or more general-purpose and/or special-purpose processors, the processor may be implemented with dedicated hardware such as, by way of example, one or more FPGAs (Field Programmable Gate Array), PLDs (Programmable Logic Device), controllers, state machines, gated logic, discrete hardware components, or any other suitable circuitry, or any combination of circuits.

Many of the above-described features and applications are implemented as software processes of a computer programming product. The processes are specified as a set of instructions recorded on a machine readable storage medium (also referred to as machine readable medium). When these instructions are executed by one or more of the processor(s) **2610**, they cause the processor(s) **2610** to perform the actions indicated in the instructions.

Furthermore, software shall be construed broadly to mean instructions, data, or any combination thereof, whether referred to as software, firmware, middleware, microcode, hardware description language, or otherwise. The software may be stored or transmitted over as one or more instructions or code on a machine-readable medium. Machine-readable media include both computer storage media and communication media including any medium that facilitates transfer of a computer program from one place to another. A storage medium may be any available medium that can be accessed by the processor(s) **2610**. By way of example, and not limitation, such machine-readable media can comprise RAM, ROM, EEPROM, CD-ROM or other optical disk storage, magnetic disk storage or other magnetic storage devices, or any other medium that can be used to carry or store desired program code in the form of instructions or data structures and that can be accessed by a processor. Also, any connection is properly termed a machine-readable medium. For example, if the software is transmitted from a website, server, or other remote source using a coaxial cable, fiber optic cable, twisted pair, digital subscriber line (DSL), or wireless technologies such as infrared (IR), radio, and microwave, then the coaxial cable, fiber optic cable, twisted pair, DSL, or wireless technologies such as infrared, radio, and microwave are included in the definition of medium. Disk and disc, as used herein, include compact disc (CD), laser disc, optical disc, digital versatile disc (DVD), floppy disk, and Blu-ray® disc where disks usually reproduce data magnetically, while discs reproduce data optically with lasers. Thus, in some aspects machine-readable media may comprise non-transitory machine-readable media (e.g., tangible media). In addition, for other aspects machine-readable media may comprise transitory machine-readable media (e.g., a signal). Combinations of the above should also be included within the scope of machine-readable media.

Also, in some embodiments, multiple software inventions can be implemented as sub-parts of a larger program while remaining distinct software inventions. In some embodiments, multiple software inventions can also be implemented as separate programs. Any combination of separate programs that together implement a software invention described here is within the scope of the invention. In some embodiments, the software programs, when installed to operate on one or more electronic systems **2600**, define one or more specific machine implementations that execute and perform the operations of the software programs.

The ROM **2615** stores static instructions needed by the processor(s) **2610** and other components of the electronic system. The ROM may store the instructions necessary for the processor(s) **2610** to execute the processes provided by the license plate detection apparatus. The permanent storage **2640** is a non-volatile memory that stores instructions and

data when the electronic system **2600** is on or off. The permanent storage **2640** is a read/write memory device, such as a hard disk or a flash drive. Storage media may be any available media that can be accessed by a computer. By way of example, the ROM could also be EEPROM, CD-ROM or other optical disk storage, magnetic disk storage or other magnetic storage devices, or any other medium that can be used to carry or store desired program code in the form of instructions or data structures and that can be accessed by a computer.

The RAM **2625** is a volatile read/write memory. The RAM **2625** stores instructions needed by the processor(s) **2610** at runtime, the RAM **2625** may also store the real-time video images acquired during the license plate detection process. The bus **2605** also connects input and output devices **2620** and **2630**. The input devices enable the user to communicate information and select commands to the electronic system. The input devices **2620** may be a keypad, image capture apparatus, or a touch screen display capable of receiving touch interactions. The output device(s) **2630** display images generated by the electronic system. The output devices may include printers or display devices such as monitors.

The bus **2605** also couples the electronic system to a network **2635**. The electronic system may be part of a local area network (LAN), a wide area network (WAN), the Internet, or an Intranet by using a network interface. The electronic system may also be a mobile apparatus that is connected to a mobile data network supplied by a wireless carrier. Such networks may include 3G, HSPA, EVDO, and/or LTE.

It is understood that the specific order or hierarchy of steps in the processes disclosed is an illustration of exemplary approaches. Based upon design preferences, it is understood that the specific order or hierarchy of steps in the processes may be rearranged. Further, some steps may be combined or omitted. The accompanying method claims present elements of the various steps in a sample order, and are not meant to be limited to the specific order or hierarchy presented.

The various aspects of this disclosure are provided to enable one of ordinary skill in the art to practice the present invention. Various modifications to exemplary embodiments presented throughout this disclosure will be readily apparent to those skilled in the art, and the concepts disclosed herein may be extended to other apparatuses, devices, or processes. Thus, the claims are not intended to be limited to the various aspects of this disclosure, but are to be accorded the full scope consistent with the language of the claims. All structural and functional equivalents to the various components of the exemplary embodiments described throughout this disclosure that are known or later come to be known to those of ordinary skill in the art are expressly incorporated herein by reference and are intended to be encompassed by the claims. Moreover, nothing disclosed herein is intended to be dedicated to the public regardless of whether such disclosure is explicitly recited in the claims. No claim element is to be construed under the provisions of 35 U.S.C. §112(f) unless the element is expressly recited using the phrase "means for" or, in the case of a method claim, the element is recited using the phrase "step for."

What is claimed is:

1. A mobile apparatus, comprising:

an image sensor configured to convert an optical image into an electrical signal, the optical image including an image of a vehicle license plate;

a license plate detector configured to:

process, by a processor, the electrical signal to identify one or more object images from the image, each of said one or more images comprising a candidate vehicle license plate image,

process, by the processor, the electrical signal to crop the image to said identified one or more of the object images,

process, by the processor, the electrical signal to score each of said cropped one or more of the object images based on a probability that the cropped object image comprises the vehicle license plate image, wherein each of the cropped one or more object images is scored by:

detecting a plurality of alphanumeric characters in the object image, and

applying a score based on a position of one of the plurality of characters relative to a position of another one of the plurality of characters, and

based on said scored object images, process, by the processor the electrical signal to recover information from the vehicle license plate image; and

an interface configured to transmit the vehicle license plate information to a remote apparatus and receive a broadcast radio service offer corresponding to the vehicle license plate image in response to the transmission.

2. The mobile apparatus of claim **1**, wherein the license plate detector is further configured to process the electrical signal to identify one or more object images from the image, each of said one or more of the object images comprising a candidate vehicle license plate image.

3. The mobile apparatus of claim **2**, wherein the license plate detector is further configured to process the electrical signal to dewarp at least one of said one or more of the object images.

4. The mobile apparatus of claim **2**, further comprising a display and a rendering module configured to render the optical image to the display and overlay a detection indicator on each of said identified one or more of the object images in the optical image.

5. The mobile apparatus of claim **1**, wherein the license plate detector is further configured to recover the information from a portion of the electrical signal corresponding to the selected one of said identified one or more of the object images.

6. The mobile apparatus of claim **1**, further comprising an image filter configured to:

apply a set of filter parameters to the electrical signal; and

dynamically adjust the parameters based on at least one of color temperature, ambient light, object image location, and the location of the apparatus.

7. A mobile apparatus, comprising:

an image sensor configured to convert an optical image into an electrical signal, wherein the optical image comprises a plurality of object images, and wherein one of the plurality of object images comprises an image of a vehicle license plate;

a license plate detector configured to:

process, by a processor, the electrical signal to identify one or more object images from the image, each of said one or more images comprising a candidate vehicle license plate image,

process, by the processor, the electrical signal to crop the image to said identified one or more of the object images,

process, by the processor, the electrical signal to score each of said cropped one or more of the object

images based on a probability that the cropped object image comprises the vehicle license plate image, wherein each of the cropped one or more object images is scored by:

detecting a plurality of alphanumeric characters in the object image, and

applying a score based on a position of one of the plurality of characters relative to a position of another one of the plurality of characters, and

based on said scored object images, process, by the processor the electrical signal to recover information from the vehicle license plate image from a portion of the electrical signal corresponding to said one of the plurality of object images; and

an interface configured to transmit the vehicle license plate information to a remote apparatus and receive a broadcast radio service offer corresponding to the vehicle license plate image in response to the transmission.

8. The mobile apparatus of claim **7**, wherein the license plate detector is further configured to process the electrical signal to dewarp said one of the object images prior to recovering the information.

9. The mobile apparatus of claim **7**, further comprising a display and a rendering module configured to render the optical image to the display and overlay a detection indicator on each of the plurality of object images.

10. The mobile apparatus of claim **9**, wherein the rendering module is further configured to overlay a first detection indicator over said one of the plurality of object images and a second detection indicator over the other object images of said plurality of object images.

11. The mobile apparatus of claim **10**, wherein the rendering module is further configured to cause the first detection indicator to appear visually different from the second detection indicator on the display.

12. The mobile apparatus of claim **7**, wherein the license plate detector is further configured to process the electrical signal to score each of the plurality of object images based on a probability that the each of the plurality of object images comprises the vehicle license plate image.

13. The mobile apparatus of claim **12**, wherein the license plate detector is further configured to select said one of the plurality of object images based on the selected object image's score.

14. A mobile apparatus, comprising:

an image sensor configured to convert an optical image into an electrical signal, the optical image comprising an image of a vehicle license plate;

a display;

a rendering module configured to render the optical image to the display;

an image filter configured to apply one or more filter parameters to the electrical signal based on at least one of color temperature of the image, ambient light, and motion of the apparatus; and

a license plate detector configured to:

process, by a processor, the electrical signal to identify one or more object images from the image, each of said one or more images comprising a candidate vehicle license plate image,

process, by the processor, the electrical signal to crop the image to said identified one or more of the object images,

process, by the processor, the electrical signal to score each of said cropped one or more of the object images based on a probability that the cropped object image comprises the vehicle license plate image, wherein each of the cropped one or more object images is scored by:

detecting a plurality of alphanumeric characters in the object image, and

applying a score based on a position of one of the plurality of characters relative to a position of another one of the plurality of characters, and

based on said scored object images, process, by the processor the electrical signal to recover information from the vehicle license plate image;

wherein the rendering module is further configured to overlay a detection indicator on the displayed optical image to assist the user position of the apparatus with respect to the optical image in response to a signal from the image filter, and

wherein the rendering module is further configured to provide an alert to the display when the license plate detector fails to recover the vehicle license plate information; and

an interface configured to transmit the vehicle license plate information to a remote apparatus and receive a broadcast radio service offer corresponding to the vehicle license plate image in response to the transmission.

15. The mobile apparatus of claim **14**, wherein the optical image comprises a plurality of object images, and wherein the license plate detector is further configured to process the electrical signal to identify one or more of the plurality of object images from the image, each of said one or more of the plurality of object images comprising a candidate vehicle license plate image.

16. The mobile apparatus of claim **15**, wherein the license plate detector is further configured to process the electrical signal to dewarp at least one of said one or more of the plurality of object images.

17. A computer program product for a mobile apparatus having an image sensor configured to convert an optical image into an electrical signal, the optical image including a plurality of object images, wherein one of the object images comprises an image of a vehicle license plate, the computer program product comprising:

a non-transitory machine readable medium comprising code to:

process the electrical signal to select said one of the object images;

process the electrical signal to identify one or more object images from the image, each of said one or more images comprising a candidate vehicle license plate image,

process the electrical signal to crop the image to said identified one or more of the object images,

process the electrical signal to score each of said cropped one or more of the object images based on a probability that the cropped object image comprises the vehicle license plate image, wherein each of the cropped one or more object images is scored by:

detecting a plurality of alphanumeric characters in the object image, and

applying a score based on a position of one of the plurality of characters relative to a position of another one of the plurality of characters, and

based on said scored object images, process a portion of the electrical signal corresponding to the selected said one of the object images to recover information from the vehicle license plate image;

transmit the vehicle license plate information to a remote apparatus; and

receive a broadcast radio service offer corresponding to the vehicle license plate image in response to the transmission.

18. The computer program product of claim **17**, wherein the code to process the electrical signal is configured to process the electrical signal to identify one or more of the object images from the image, each of said one or more of the object images comprising a candidate vehicle license plate image.

19. The computer program product of claim **18**, wherein the code for processing the electrical signal is further configured to dewarp at least one of said one or more of the object images.

20. The computer program product of claim **17**, wherein the code to process the electrical signal is further configured to select said one of the object images from said identified one or more of the object images based on the scores.

21. The computer program product of claim **20**, wherein the code to process the electrical signal is further configured to recover the information from a portion of the electrical signal corresponding to the selected one of said identified one or more of the object images.

22. A mobile apparatus, comprising:

an image sensor configured to convert an optical image into an electrical signal, the optical image including an image of a vehicle license plate;

a timing circuit configured to sample the electrical signal at a frame rate;

a license plate detector configured to:

process, by a processor, the electrical signal to identify one or more object images from the image, each of said one or more images comprising a candidate vehicle license plate image,

process, by the processor, the electrical signal to crop the image to said identified one or more of the object images,

process, by the processor, the electrical signal to score each of said cropped one or more of the object images based on a probability that the cropped object image comprises the vehicle license plate image, wherein each of the cropped one or more object images is scored by:

detecting a plurality of alphanumeric characters in the object image, and

applying a score based on a position of one of the plurality of characters relative to a position of another one of the plurality of characters, and

based on said scored object images, process, by the processor the sampled electrical signal to recover information from the vehicle license plate image; and

an interface configured to transmit the vehicle license plate information to a remote apparatus and receive a broadcast radio service offer corresponding to the vehicle license plate image in response to the transmission.

23. The apparatus of claim **22**, wherein the sampled electrical signal comprises a plurality of samples, and wherein the license plate detector is further configured to identify one or more object images from at least one of the plurality of samples.

24. The apparatus of claim **23**, wherein at least one of said one or more of the object images comprising a candidate vehicle license plate image.

25. The apparatus of claim **24**, wherein the license plate detector is further configured to process said at least one of the plurality of samples to score each of said one or more of the object images based on a probability that the object image comprises the vehicle license plate image.

26. The apparatus of claim **25**, wherein the license plate detector is further configured to process at least first and second samples of the plurality of samples to score each of said one or more of the object images from each of said at least first and second samples.

27. The apparatus of claim **26**, wherein each of said one or more object images detected in the first sample is associated with location information, and wherein the license plate detector is further configured to use the location information to estimate the location of said one or more of the objects in the second sample.

28. The apparatus of claim **25**, wherein the license plate detector is further configured to stop processing the sampled electrical signal when said score is above a threshold value.

29. The apparatus of claim **23**, further comprising

a display, wherein each sample represents a frame of a video image presented to the display; and

a rendering module configured to render each frame of the video image to the display and overlay a detection indicator on each of said identified one or more of the object images.

30. The apparatus of claim **29**, wherein the overlay provides a visual indication of the object image associated with the score that is above a threshold value.

* * * * *