US009795334B2

(12) United States Patent
Freeman et al.

(10) Patent No.: US 9,795,334 B2
(45) Date of Patent: Oct. 24, 2017

(54) **METHOD AND APPARATUS FOR PENETRATING TISSUE**

(75) Inventors: **Dominique M. Freeman**, La Honda, CA (US); **Dirk Boecker**, Palo Alto, CA (US); **Don Alden**, Sunnyvale, CA (US); **Jason Hegener**, San Francisco, CA (US)

(73) Assignee: **SANOFI-AVENTIS DEUTSCHLAND GMBH**, Frankfurt am Main (DE)

(*) Notice: Subject to any disclaimer, the term of this patent is extended or adjusted under 35 U.S.C. 154(b) by 0 days.

(21) Appl. No.: **11/774,778**

(22) Filed: **Jul. 9, 2007**

(65) **Prior Publication Data**

US 2008/0021491 A1 Jan. 24, 2008

Related U.S. Application Data

(63) Continuation of application No. 11/536,720, filed on Sep. 29, 2006, now Pat. No. 8,690,796, which is a (Continued)

(51) **Int. Cl.**
A61B 5/151 (2006.01)
A61B 5/15 (2006.01)
(Continued)

(52) **U.S. Cl.**
CPC ***A61B 5/15146*** (2013.01); ***A61B 5/1411*** (2013.01); ***A61B 5/1427*** (2013.01); ***A61B 5/151*** (2013.01); ***A61B 5/157*** (2013.01); ***A61B 5/150022*** (2013.01); ***A61B 5/15087*** (2013.01); ***A61B 5/15113*** (2013.01); ***A61B 5/15123*** (2013.01); ***A61B 5/15151*** (2013.01); ***A61B 5/150152*** (2013.01); ***A61B 5/15153*** (2013.01);
(Continued)

(58) **Field of Classification Search**
CPC ... A61B 5/15146; A61B 5/1411; A61B 5/442; A61B 5/1427; A61B 5/15186; A61B 5/151; A61M 5/3295
USPC 600/573, 575–579, 583; 606/181–183
See application file for complete search history.

(56) **References Cited**

U.S. PATENT DOCUMENTS

2,061 A	4/1841	Osdel	.....	606/182
55,620 A	6/1866	Capewell	.....	606/181

(Continued)

FOREIGN PATENT DOCUMENTS

CN	1946340 A	4/2007	
DE	2206674	8/1972	..... C07D 39/10

(Continued)

OTHER PUBLICATIONS

A. Bott, W. Heineman, Chronocoulometry, Current Separations, 2004, 20, pp. 121.

(Continued)

Primary Examiner — Rene Towa
(74) *Attorney, Agent, or Firm* — Paul Davis; Beyer Law Group LLP

(57) **ABSTRACT**

A tissue penetrating system has a housing member, a plurality of penetrating members positioned in the housing member and a plurality of sample chambers. Each sample chamber is associated with a penetrating member. A tissue stabilizing member has a tissue interface surface configured to be applied to a tissue surface and provide for spontaneous flow of blood for sample capture. The tissue stabilizing member is coupled to the housing.

20 Claims, 33 Drawing Sheets

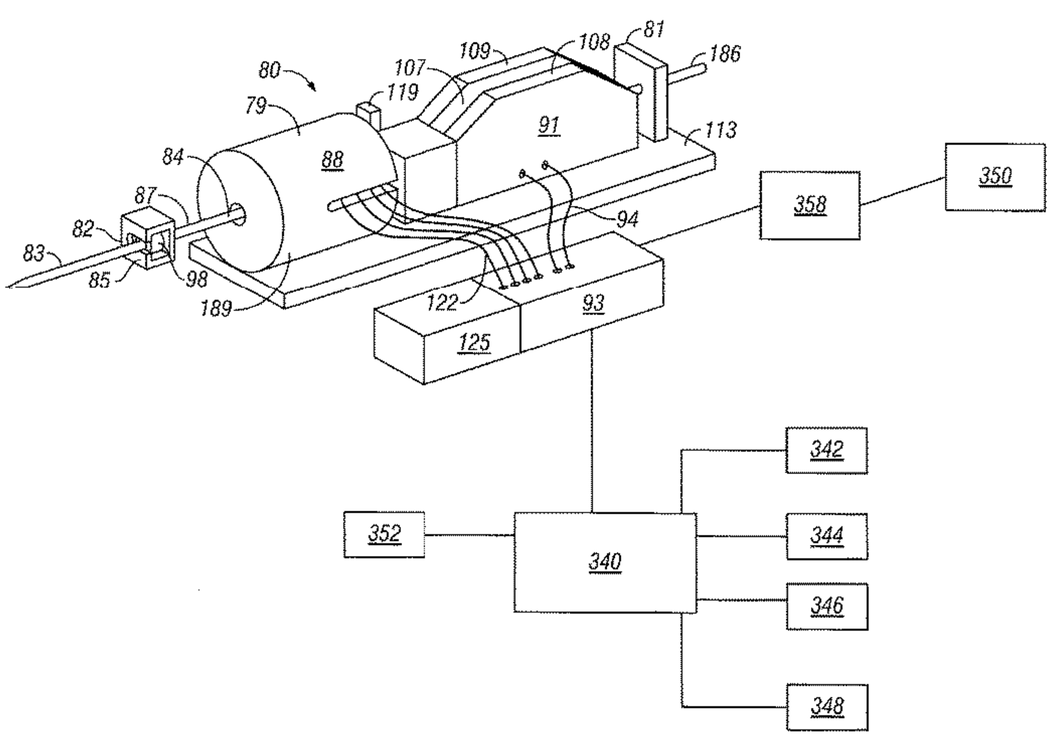

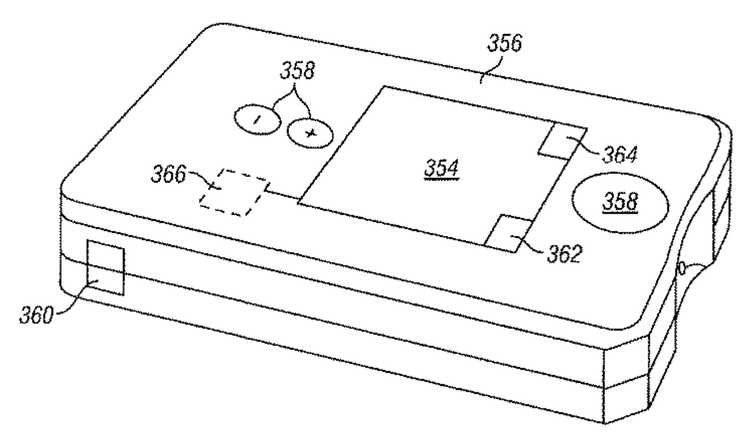

Related U.S. Application Data

continuation of application No. 10/335,212, filed on Dec. 31, 2002, now Pat. No. 7,547,287, which is a continuation-in-part of application No. 10/127,395, filed on Apr. 19, 2002, now Pat. No. 7,025,774, and application No. 11/536,720, which is a continuation of application No. 10/237,261, filed on Sep. 5, 2002, now Pat. No. 7,344,507, and a continuation of application No. 10/237,262, filed on Sep. 5, 2002, now Pat. No. 7,175,642.

(51) **Int. Cl.**

A61B 5/155	(2006.01)
A61M 5/32	(2006.01)
A61B 5/157	(2006.01)
A61B 5/145	(2006.01)
A61B 5/1486	(2006.01)
A61B 5/00	(2006.01)

(52) **U.S. Cl.**

CPC ***A61B 5/15163*** (2013.01); ***A61B 5/150167*** (2013.01); ***A61B 5/15169*** (2013.01); ***A61B 5/15171*** (2013.01); ***A61B 5/150175*** (2013.01); ***A61B 5/15176*** (2013.01); ***A61B 5/15178*** (2013.01); ***A61B 5/15184*** (2013.01); ***A61B 5/15186*** (2013.01); ***A61B 5/15194*** (2013.01); ***A61B 5/150221*** (2013.01); ***A61B 5/150343*** (2013.01); ***A61B 5/150358*** (2013.01); ***A61B 5/150412*** (2013.01); ***A61B 5/150427*** (2013.01); ***A61B 5/150503*** (2013.01); ***A61B 5/150572*** (2013.01); ***A61B 5/150755*** (2013.01); ***A61M 5/3295*** (2013.01); *A61B 5/14532* (2013.01); *A61B 5/14865* (2013.01); *A61B 5/6886* (2013.01)

(56) **References Cited**

U.S. PATENT DOCUMENTS

1,135,465	A	4/1915	Pollock	606/181
1,733,847	A	10/1929	Wilmot	292/332
2,258,857	A	10/1941	McCann	601/81
2,628,319	A	2/1953	Vang	310/15
2,714,890	A	8/1955	Alfred	606/169
2,763,935	A *	9/1956	Whaley et al.	33/511
2,801,633	A	8/1957	Ehrlich	606/181
2,880,876	A	4/1959	Dujardin	210/523
3,046,987	A	7/1962	Ehrlich	128/314
3,030,959	A	9/1962	Grunert	128/329
3,063,451	A	11/1962	Kowalk	600/576
3,086,288	A	4/1963	Balamuth	30/277.4
3,090,384	A	5/1963	Baldwin et al.	604/272
3,208,452	A	9/1965	Stern	606/182
3,358,689	A	12/1967	Higgins	128/329
3,412,729	A	11/1968	Smith, Jr.	128/2.05
3,424,154	A	1/1969	Kinsley	604/70
3,448,307	A	6/1969	Rudolph	310/23
3,494,358	A	2/1970	Grossenbacher	128/218
3,607,097	A	9/1971	Auphan et al.	422/66
3,620,209	A	11/1971	Kravitz	601/79
3,626,929	A	12/1971	Sanz	128/2 R
3,628,026	A	12/1971	Cronin	250/214.1
3,665,672	A	5/1972	Speelman	53/435
3,673,475	A	6/1972	Britton	318/122
3,712,293	A	1/1973	Mielke, Jr.	128/2 G
3,734,812	A	5/1973	Yazawa	428/107
3,742,954	A	7/1973	Strickland	128/302
3,780,960	A	12/1973	Tokuno	242/555.2
3,832,776	A	9/1974	Sawyer	30/272
3,836,148	A	9/1974	Manning	273/368
3,851,543	A	12/1974	Krom	74/493
3,853,010	A	12/1974	Christen	73/864.24
3,924,818	A	12/1975	Pfeifle	242/364.7
3,938,526	A	2/1976	Anderson	128/303.1
3,953,172	A	4/1976	Shapiro	23/230
3,971,365	A	7/1976	Smith	128/2.17
4,057,394	A	11/1977	Genshaw	23/230
4,077,406	A	3/1978	Sandhage	604/61
4,109,655	A	8/1978	Chacornac	128/253
4,139,011	A	2/1979	Benoit	606/182
4,154,228	A	5/1979	Feldstein	606/169
4,168,130	A	9/1979	Barth	404/99
4,184,486	A	1/1980	Papa	600/373
4,190,420	A	2/1980	Covington	422/63
4,191,193	A	3/1980	Seo	600/488
4,193,690	A	3/1980	Levenson	356/301
4,203,446	A	5/1980	Hofert	606/182
4,207,870	A	6/1980	Eldridge	128/766
4,223,674	A	9/1980	Fluent	604/504
4,224,125	A	9/1980	Nakamura	204/195 B
4,224,949	A	9/1980	Scott	128/734
4,230,118	A	10/1980	Holman et al.	128/314
4,240,439	A	12/1980	Abe	600/412
4,254,083	A	3/1981	Columbus	422/55
4,258,001	A	3/1981	Pierce	422/56
4,259,653	A	3/1981	McGonigal	310/15
4,299,230	A	11/1981	Kubota	600/300
4,301,412	A	11/1981	Hill	324/442
4,321,397	A	3/1982	Nix	548/366
4,338,174	A	7/1982	Tamura	204/195
4,340,669	A	7/1982	Bauer	435/14
4,350,762	A	9/1982	De Luca	435/10
4,353,984	A	10/1982	Yamada	435/14
4,356,826	A	11/1982	Kubota	600/300
4,360,016	A	11/1982	Sarrine	128/763
4,388,922	A	6/1983	Telang	604/319
4,391,905	A	7/1983	Bauer	435/14
4,391,906	A	7/1983	Bauer	435/14
4,392,933	A	7/1983	Nakamura	204/403.14
4,394,512	A	7/1983	Batz	548/365
4,397,556	A	8/1983	Muller	356/301
4,407,008	A	9/1983	Schmidt	356/301
4,411,266	A	10/1983	Cosman	128/303.18
4,414,975	A	11/1983	Ryder	128/314
4,418,037	A	11/1983	Katsuyama	422/56
4,420,564	A	12/1983	Tsuji	435/288
4,425,039	A	1/1984	Grant	356/35.5
4,426,451	A	1/1984	Columbus	436/518
4,426,884	A	1/1984	Polchaninoff	73/172
4,440,301	A	4/1984	Intengan	206/456
4,442,836	A	4/1984	Meinecke	128/314
4,442,972	A	4/1984	Sahay	
4,449,529	A	5/1984	Burns	606/182
4,462,405	A	7/1984	Ehrlich	606/182
4,469,110	A	9/1984	Slama	128/770
4,490,139	A	12/1984	Huizenga et al.	604/57
4,517,978	A	5/1985	Levin	128/314
4,518,384	A	5/1985	Tarello	604/61
4,523,994	A	6/1985	Shono	549/352
4,535,769	A	8/1985	Burns	128/314
4,535,773	A	8/1985	Yoon	606/185
4,537,197	A	8/1985	Hulka	128/633
4,539,988	A	9/1985	Shirley	128/314
4,545,382	A	10/1985	Higgins	128/635
4,553,541	A	11/1985	Burns	128/314
4,561,445	A	12/1985	Berke	128/642
4,577,630	A	3/1986	Nitzsche	128/314
4,580,564	A	4/1986	Anderson	502/8
4,580,565	A	4/1986	Cornell	128/314
4,586,819	A	5/1986	Tochigi	356/301
4,586,926	A	5/1986	Osborne	604/272
4,590,411	A	5/1986	Kelly	318/687
4,595,479	A	6/1986	Kimura	204/294
4,600,014	A	7/1986	Beraha	128/754
4,603,209	A	7/1986	Tsien	549/352
4,608,997	A	9/1986	Conway	128/763
4,615,340	A	10/1986	Cronenberg	128/635
4,616,649	A	10/1986	Burns	128/314
4,619,754	A	10/1986	Niki	204/290
4,622,974	A	11/1986	Coleman	128/634
4,624,253	A	11/1986	Burns	128/314

(56) **References Cited**

U.S. PATENT DOCUMENTS

4,627,445	A	12/1986	Garcia	600/583
4,637,393	A	1/1987	Ray	128/305
4,637,403	A	1/1987	Garcia	600/583
4,643,189	A	2/1987	Mintz	128/314
4,648,408	A	3/1987	Hutcheson	128/770
4,648,714	A	3/1987	Benner	356/301
4,653,511	A	3/1987	Goch	128/763
4,653,513	A	3/1987	Dombrowski	600/578
4,655,225	A	4/1987	Dahne	600/316
4,661,768	A	4/1987	Carusillo	324/678
4,666,438	A	5/1987	Raulerson	604/272
4,676,244	A	6/1987	Enstrom	128/514
4,677,979	A	7/1987	Burns	128/314
4,678,277	A	7/1987	Delhaye	356/301
4,682,892	A	7/1987	Chawla	356/353
4,695,273	A	9/1987	Brown	
4,702,594	A	10/1987	Grant	356/35.5
4,711,245	A	12/1987	Higgins	128/635
4,712,460	A	12/1987	Allen	83/208
4,712,548	A	12/1987	Enstrom	128/314
4,714,462	A	12/1987	DiDomenico	604/67
4,715,374	A	12/1987	Maggio	128/314
4,731,330	A	3/1988	Hilll	436/16
4,731,726	A	3/1988	Allen, III	600/300
4,734,360	A	3/1988	Phillips	435/25
4,735,203	A	4/1988	Ryder	128/314
4,737,458	A	4/1988	Batz	435/28
4,750,489	A	6/1988	Berkman	606/166
4,753,776	A	6/1988	Hillman	422/101
4,756,884	A	7/1988	Hillman	422/73
4,757,022	A	7/1988	Shults et al.	435/291
4,758,323	A	7/1988	Davis	204/403
4,774,192	A	9/1988	Teriniello	436/530
4,784,486	A	11/1988	Van Wagenen	356/301
4,787,398	A	11/1988	Garcia	600/583
4,790,979	A	12/1988	Teriniello	422/56
4,794,926	A	1/1989	Munsch et al.	606/183
4,797,283	A	1/1989	Allen	424/443
4,814,142	A	3/1989	Gleisner	422/56
4,814,661	A	3/1989	Ratzlaff	310/328
4,817,603	A	4/1989	Turner	606/182
4,818,493	A	4/1989	Coville	422/102
4,820,010	A	4/1989	Sciefres	385/43
4,820,399	A	4/1989	Senda	204/403
4,823,806	A	4/1989	Bajada	600/557
4,824,639	A	4/1989	Hildenbrand	422/56
RE32,922	E	5/1989	Levin	128/314
4,825,711	A	5/1989	Jensen	73/865.8
4,827,763	A	5/1989	Bourland	73/172
4,829,011	A	5/1989	Gibbons	436/512
4,830,959	A	5/1989	McNeill	435/53
4,836,904	A	6/1989	Armstron	204/294
4,840,893	A	6/1989	Hill	435/6
4,844,095	A	7/1989	Chiodo	128/314
4,845,392	A	7/1989	Mumbower	310/14
4,850,973	A	7/1989	Jordan	604/157
4,857,274	A	8/1989	Simon	422/72
4,868,129	A	9/1989	Gibbons	436/179
4,869,249	A	9/1989	Crossman	128/314
4,869,265	A	9/1989	McEwen	128/774
4,873,993	A	10/1989	Meserol	128/780
4,877,026	A	10/1989	de Laforcade	128/305
4,882,013	A	11/1989	Turner	204/1
4,883,055	A	11/1989	Merrick	128/633
4,883,068	A	11/1989	Dechow	128/760
4,886,499	A	12/1989	Cirelli	604/131
4,889,529	A	12/1989	Haindl	604/274
4,892,097	A	1/1990	Ranalletta	606/182
4,895,147	A	1/1990	Bodicky	606/182
4,895,156	A	1/1990	Schulze	600/342
4,897,173	A	1/1990	Nankai	204/403
4,900,424	A	2/1990	Birch	204/409
4,900,666	A	2/1990	Phillips	435/25
4,911,794	A	3/1990	Parce	204/1 T
4,920,977	A	5/1990	Haynes	128/770
4,924,879	A	5/1990	O'brien	600/583
4,935,346	A	6/1990	Phillips	435/14
4,938,218	A	7/1990	Goodman	128/633
4,940,468	A	7/1990	Petillo	606/170
4,944,304	A	7/1990	Nishina	128/667
4,945,045	A	7/1990	Forrest	435/25
4,946,795	A	8/1990	Gibbons	436/179
4,948,727	A	8/1990	Cass	435/18
4,948,961	A	8/1990	Hillman	250/252.1
4,952,373	A	8/1990	Sugarman	422/99
4,952,515	A	8/1990	Gleisner	436/169
4,953,552	A	9/1990	DeMarzo	128/635
4,953,976	A	9/1990	Adler-Golden	356/301
4,963,498	A	10/1990	Hillman	436/69
4,966,581	A	10/1990	Landau	604/72
4,966,646	A	10/1990	Zdeblick	156/633
4,966,671	A	10/1990	Nylander	204/153.14
4,975,581	A	12/1990	Robinson	250/339
4,976,724	A	12/1990	Nieto	606/182
4,977,910	A	12/1990	Miyahara	134/7
4,983,178	A	1/1991	Schnell	606/181
4,984,085	A	1/1991	Landowski	358/213
4,990,154	A	2/1991	Brown	606/182
4,995,402	A	2/1991	Smith	600/584
4,999,582	A	3/1991	Parks	324/438
5,001,054	A	3/1991	Wagner	435/14
5,001,873	A	3/1991	Rufin	451/39
5,004,923	A	4/1991	Hillman	250/341
5,010,772	A	4/1991	Bourland	73/862.04
5,010,774	A	4/1991	Kikuo	73/862.04
5,014,718	A	5/1991	Mitchen	128/771
5,019,974	A	5/1991	Beckers	364/413.02
5,026,388	A	6/1991	Ingalz	606/182
D318,331	S	7/1991	Phillips	D24/169
5,028,142	A	7/1991	Ostoich et al.	366/273
5,029,583	A	7/1991	Meserol	600/316
5,035,704	A	7/1991	Lambert	606/182
5,039,617	A	8/1991	McDonald	436/69
5,043,143	A	8/1991	Shaw	422/65
5,046,496	A	9/1991	Betts	600/352
5,047,044	A	9/1991	Smith	606/182
5,049,487	A	9/1991	Phillips	435/4
5,049,673	A	9/1991	Tsien	549/352
5,054,487	A	10/1991	Clarke	128/633
5,054,499	A	10/1991	Swierczek	128/770
5,057,082	A	10/1991	Burchette, Jr.	604/164
5,057,277	A	10/1991	Mauze	422/56
5,059,394	A	10/1991	Phillips	422/68.1
5,059,789	A	10/1991	Salcudean	435/4
5,060,174	A	10/1991	Gross	702/139
5,062,898	A	11/1991	McDermott	134/7
5,070,874	A	12/1991	Barnes	128/633
5,070,886	A	12/1991	Mitchen	128/771
5,073,500	A	12/1991	Saito et al.	436/53
5,074,872	A	12/1991	Brown	606/182
5,077,017	A	12/1991	Gorin	422/100
5,077,199	A	12/1991	Basagni	435/14
5,080,865	A	1/1992	Leiner	422/68.1
5,086,229	A	2/1992	Rosenthal	250/341
5,089,112	A	2/1992	Skotheim	204/403
5,092,842	A	3/1992	Bechtold	604/135
5,094,943	A	3/1992	Siedel	435/25
5,096,669	A	3/1992	Lauks	204/403.02
5,097,810	A	3/1992	Fishman	600/556
5,100,427	A	3/1992	Crossman	606/182
5,100,428	A	3/1992	Mumford	606/182
5,104,380	A	4/1992	Holman	604/117
5,104,382	A	4/1992	Brinkerhoff et al.	604/164.12
5,104,619	A	4/1992	Castro	422/56
5,104,813	A	4/1992	Besemer	436/179
5,107,764	A	4/1992	Gasparrini	101/425
5,108,564	A	4/1992	Szuminsky	204/153.12
5,108,889	A *	4/1992	Smith et al.	435/4
5,116,759	A	5/1992	Klainer	435/288
5,120,420	A	6/1992	Nankai	204/403
5,122,244	A	6/1992	Hoenes	204/153
5,126,034	A	6/1992	Carter	204/403
5,128,015	A	7/1992	Szuminsky	204/403
5,128,171	A	7/1992	Gleisner	427/2

(56) **References Cited**

U.S. PATENT DOCUMENTS

5,132,801	A	7/1992	Yamano	358/213
5,133,730	A	7/1992	Biro	606/182
5,135,719	A	8/1992	Hillman	422/101
5,139,685	A	8/1992	Castro	210/767
5,140,161	A	8/1992	Hillman	250/341
5,141,868	A	8/1992	Shanks	435/288
5,144,139	A	9/1992	Hillman	250/341
5,145,565	A	9/1992	Kater	600/341
5,146,091	A	9/1992	Knudson	250/341.6
5,152,296	A	10/1992	Simons	128/670
5,152,775	A	10/1992	Ruppert	606/182
5,153,671	A	10/1992	Miles	356/301
5,156,611	A	10/1992	Haynes	606/181
5,162,525	A	11/1992	Masilamani	549/352
5,163,442	A	11/1992	Ono	128/760
5,164,598	A	11/1992	Hillman	250/341
5,167,619	A	12/1992	Wuchinich	604/22
5,170,364	A	12/1992	Gross	702/139
5,174,726	A	12/1992	Findlay	417/205
D332,490	S	1/1993	Brown	D24/146
5,178,142	A	1/1993	Harjunmaa	128/633
5,179,005	A	1/1993	Phillips	435/14
5,181,910	A	1/1993	Scanlon	604/67
5,181,914	A	1/1993	Zook	604/307
5,183,042	A	2/1993	Harjunmaa	128/633
5,185,256	A	2/1993	Nankai	435/174
5,187,100	A	2/1993	Matzinger	436/16
5,188,118	A	2/1993	Terwilliger	600/566
5,189,751	A	3/1993	Giuliani	15/22.1
5,192,415	A	3/1993	Yoshioka	204/403
5,194,391	A	3/1993	Nauze	436/166
5,196,025	A	3/1993	Ranalletta	606/182
5,201,324	A	4/1993	Swierczek	128/770
5,205,920	A	4/1993	Oyama	204/403
5,208,163	A	5/1993	Charlton et al.	436/63
5,209,028	A	5/1993	McDermott	51/426
5,211,652	A	5/1993	Derbyshire	606/182
5,212,879	A	5/1993	Biro	29/437
5,215,587	A	6/1993	McConnellogue	118/699
5,216,597	A	6/1993	Beckers	364/413.02
5,217,476	A	6/1993	Wishinsky	606/167
5,217,480	A	6/1993	Haber	606/182
5,218,966	A	6/1993	Yamasawa	600/499
5,222,504	A	6/1993	Solomon	600/557
5,228,972	A	7/1993	Osaka	204/415
5,229,282	A	7/1993	Yoshioka	435/177
5,230,866	A	7/1993	Shartle	422/103
5,231,993	A	8/1993	Haber et al.	128/770
5,241,969	A	9/1993	Carson	600/566
5,247,932	A	9/1993	Chung	128/633
5,249,583	A	10/1993	Mallaby	600/567
5,250,066	A	10/1993	Lambert	606/181
5,251,126	A	10/1993	Kahn	364/413.11
5,253,656	A	10/1993	Rincoe	128/782
5,256,998	A	10/1993	Becker	335/229
5,264,103	A	11/1993	Yoshioka	204/403
5,264,105	A	11/1993	Gregg	204/403
5,264,106	A	11/1993	McAleer	204/403
5,266,179	A	11/1993	Nankai	204/401
5,266,359	A	11/1993	Spielvogel	427/388.4
D342,573	S	12/1993	Cerola	D24/147
5,267,974	A	12/1993	Lambert	604/195
5,272,087	A	12/1993	El Murr	435/291
5,277,181	A	1/1994	Mendelson	128/633
5,279,294	A	1/1994	Anderson	600/322
5,279,791	A	1/1994	Aldrich	422/58
5,282,822	A	2/1994	Macors	606/182
5,286,362	A	2/1994	Hoenes	204/403
5,286,364	A	2/1994	Yacynych	204/418
5,288,636	A	2/1994	Pollman	435/288
5,294,261	A	3/1994	McDermott	134/7
5,296,378	A	3/1994	Sakata	436/63
5,300,779	A	4/1994	Hillman	250/341
5,304,192	A	4/1994	Crouse	606/181
5,304,193	A	4/1994	Zhadanov	606/182
5,304,347	A	4/1994	Mann	422/67
5,304,468	A	4/1994	Phillips	435/14
5,306,623	A	4/1994	Kiser	435/14
5,307,263	A	4/1994	Brown	600/301
5,312,590	A	5/1994	Gunasingham	422/56
5,314,441	A	5/1994	Cusack	606/182
5,314,442	A	5/1994	Morita	606/182
5,315,793	A	5/1994	Peterson	451/2
5,316,012	A	5/1994	Siegal	128/744
5,318,583	A	6/1994	Rabenau	606/182
5,318,584	A	6/1994	Lange	606/182
5,320,607	A	6/1994	Ishibashi	604/115
5,320,808	A	6/1994	Holen	422/64
5,324,302	A	6/1994	Crouse	606/181
5,324,303	A	6/1994	Strong	606/181
5,330,634	A	7/1994	Wong	205/777.5
5,332,479	A	7/1994	Uenoyama	204/153.12
5,341,206	A	8/1994	Pittaro	356/301
5,342,382	A	8/1994	Brinkerhoff	606/184
5,344,703	A	9/1994	Kovar	428/312.6
5,350,392	A	9/1994	Purcell	606/182
5,352,351	A	10/1994	White	204/406
5,354,287	A	10/1994	Wacks	604/232
5,354,447	A	10/1994	Uenoyama	204/403
5,356,420	A	10/1994	Czernecki	606/182
5,360,410	A	11/1994	Wacks	604/232
5,365,699	A	11/1994	Armstrong	451/7
5,366,469	A	11/1994	Steg	606/182
5,366,470	A	11/1994	Ramel	606/183
5,366,609	A	11/1994	White	204/403
5,368,047	A	11/1994	Suzuki	600/578
5,370,509	A	12/1994	Golding	417/423.1
5,371,687	A	12/1994	Holmes	364/514
5,372,135	A	12/1994	Mendelson	600/322
5,375,397	A	12/1994	Ferrand	54/66
5,378,628	A	1/1995	Graetzel	435/288
5,382,346	A	1/1995	Uenoyama	204/403
5,383,885	A	1/1995	Bland	606/182
5,389,534	A	2/1995	Gentezkow	435/180
5,390,450	A	2/1995	Goenka	451/39
5,393,903	A	2/1995	Graetzel	556/137
5,395,339	A	3/1995	Talonn	604/111
5,395,387	A	3/1995	Burns	606/181
5,397,334	A	3/1995	Schenk	606/182
5,401,376	A	3/1995	Foos	204/415
5,402,798	A	4/1995	Swierczek	128/770
5,405,283	A	4/1995	Goenka	451/39
5,405,510	A	4/1995	Betts	205/782
5,405,511	A	4/1995	White	204/153.1
5,407,545	A	4/1995	Hirose	204/153.12
5,407,554	A	4/1995	Saurer	204/403
5,407,818	A	4/1995	Gentezkow	435/180
5,409,583	A	4/1995	Yoshioka	204/153.12
5,409,664	A	4/1995	Allen	422/56
5,410,059	A	4/1995	Fraser	546/10
5,410,474	A	4/1995	Fox	600/300
5,415,169	A	5/1995	Siczek	600/427
5,418,142	A	5/1995	Kiser	435/14
5,423,847	A	6/1995	Strong et al.	606/182
5,424,545	A	6/1995	Block	350/343
5,426,032	A	6/1995	Phillips	435/14
5,436,161	A	7/1995	Bergstrom	435/291
5,437,999	A	8/1995	Diebold	435/288
5,438,271	A	8/1995	White	324/444
5,443,701	A	8/1995	Willner	204/153
5,445,920	A	8/1995	Saito	430/311
D362,719	S	9/1995	Kaplan	D24/147
5,453,360	A	9/1995	Yu	435/28
5,454,828	A	10/1995	Schraga	606/181
5,456,875	A	10/1995	Lambert	264/328.1
5,459,325	A	10/1995	Hueton	250/458.1
5,460,182	A	10/1995	Goodman	600/342
5,462,533	A	10/1995	Daugherty	604/164
5,464,418	A	11/1995	Schraga	606/182
5,465,722	A	11/1995	Fort	600/447
5,471,102	A	11/1995	Becker	310/50
5,472,427	A	12/1995	Rammler	604/164.01
5,474,084	A	12/1995	Cunniff	600/557
5,476,474	A	12/1995	Davis	606/182

(56) **References Cited**

U.S. PATENT DOCUMENTS

5,480,387	A	1/1996	Gabriel	604/134
5,487,748	A	1/1996	Marshall	606/182
D367,109	S	2/1996	Ryner	D24/224
5,490,505	A	2/1996	Diab	600/323
5,496,274	A	3/1996	Graves	604/86
5,496,453	A	3/1996	Uenoyama	205/777.5
5,498,542	A	3/1996	Corey	435/283.1
5,501,836	A	3/1996	Myerson	42/57
5,501,893	A	3/1996	Laermer	428/161
5,507,288	A	4/1996	Bocker	128/633
5,507,629	A	4/1996	Jarvik	417/423.3
5,508,171	A	4/1996	Walling	205/777.5
5,509,410	A	4/1996	Hill	128/637
5,510,266	A	4/1996	Bonner et al.	436/43
5,512,159	A	4/1996	Yoshioka	201/403
5,514,152	A	5/1996	Smith	606/182
5,515,170	A	5/1996	Matzinger	356/423
5,518,006	A	5/1996	Mawhirt	128/770
D371,198	S	6/1996	Savage	D24/169
5,524,636	A	6/1996	Sarvazyan	128/774
5,525,511	A	6/1996	D'Costa	435/287.9
5,525,518	A	6/1996	Lundsgaard	436/68
5,526,120	A	6/1996	Jina	356/446
5,527,333	A	6/1996	Nikkels	606/182
5,527,334	A	6/1996	Kanner	606/182
5,529,074	A	6/1996	Greenfield	600/557
5,540,676	A	7/1996	Freiberg	606/3
5,540,709	A	7/1996	Ramel	606/183
5,543,326	A	8/1996	Heller	435/287.9
5,545,174	A	8/1996	Schenk	606/182
5,545,291	A	8/1996	Smith	438/107
5,547,702	A	8/1996	Gleisner	427/2.13
D373,419	S	9/1996	Muramatsu	D24/165
5,554,153	A	9/1996	Costello	606/9
5,554,166	A	9/1996	Lange	606/182
5,558,834	A	9/1996	Chu	422/55
5,562,384	A	10/1996	Alvite	414/226.01
5,562,696	A	10/1996	Nobles	606/185
5,563,031	A	10/1996	Yu	435/4
5,563,042	A	10/1996	Phillips	435/14
5,569,286	A	10/1996	Peckham	606/181
5,569,287	A	10/1996	Tezuka	606/182
5,571,132	A	11/1996	Mawhirt	606/182
5,575,284	A	11/1996	Athan	600/323
5,575,403	A	11/1996	Charlton	221/31
5,575,895	A	11/1996	Ikeda	204/403
5,582,697	A	12/1996	Ikeda	204/403
5,584,846	A	12/1996	Mawhirt	606/181
5,591,139	A	1/1997	Lin	604/264
5,593,852	A	1/1997	Heller	435/14
5,599,501	A	2/1997	Carey	422/64
5,605,837	A	2/1997	Karimi	436/14
D378,612	S	3/1997	Clark	D24/169
5,608,006	A	3/1997	Myerson	525/54.1
5,609,749	A	3/1997	Yamauchi	205/777.5
5,611,809	A	3/1997	Marshall	606/181
5,611,810	A	3/1997	Arnold	606/185
5,613,978	A	3/1997	Harding	606/181
5,616,135	A	4/1997	Thorne	604/192
5,617,851	A	4/1997	Lipkovker	600/573
5,618,297	A	4/1997	Hart	606/185
5,620,579	A	4/1997	Genshaw	204/402
5,620,863	A	4/1997	Tomasco	435/14
5,624,458	A	4/1997	Lipscher	606/181
5,624,459	A	4/1997	Kortenbach	606/185
5,624,537	A	4/1997	Turner	204/403
D379,516	S	5/1997	Rutter	D24/146
5,628,764	A	5/1997	Schraga	606/182
5,628,765	A	5/1997	Morita	606/182
5,628,890	A	5/1997	Carter	204/403
5,628,961	A	5/1997	Davis	422/63
5,630,828	A	5/1997	Mawhirt	606/187
5,630,986	A	5/1997	Charlton	422/64
5,632,410	A	5/1997	Moulton	221/79
5,640,954	A	6/1997	Pfeiffer	128/635
D381,591	S	7/1997	Rice	D10/81
5,643,306	A	7/1997	Schraga	606/182
5,643,308	A	7/1997	Markman	606/187
5,645,555	A	7/1997	Davis	606/182
5,647,851	A	7/1997	Pokras	604/131
5,650,062	A	7/1997	Ikeda	205/778
5,653,863	A	8/1997	Genshaw	205/777.5
5,657,760	A	8/1997	Ying et al.	128/660.03
5,658,444	A	8/1997	Black	204/415
5,660,791	A	8/1997	Brenneman	422/58
D383,550	S	9/1997	Larson	D24/225
5,662,127	A	9/1997	De Vaughn	128/765
5,662,672	A	9/1997	Pambianchi	606/181
5,666,966	A	9/1997	Horie	128/760
5,676,143	A	10/1997	Simonsen	128/633
5,678,306	A	10/1997	Bozeman	29/888.025
5,680,858	A	10/1997	Hansen et al.	128/635
5,680,872	A	10/1997	Sesekura	128/760
5,682,233	A	10/1997	Brinda	356/246
5,682,884	A	11/1997	Hill	128/637
5,683,562	A	11/1997	Schaffar	204/403
5,691,898	A	11/1997	Rosenberg	700/85
5,692,514	A	12/1997	Bowman	600/504
5,695,947	A	12/1997	Guo	435/11
5,700,695	A	12/1997	Yassinzadeh	436/180
5,705,045	A	1/1998	Park	204/403
5,707,384	A	1/1998	Kim	606/181
5,708,247	A	1/1998	McAleer	204/403
5,709,668	A	1/1998	Wacks	604/232
5,709,699	A	1/1998	Warner	606/181
5,710,011	A	1/1998	Forrow	435/25
5,714,123	A	2/1998	Sohrab	422/99
5,714,390	A	2/1998	Hallowitz	436/526
5,719,034	A	2/1998	Kiser	435/14
5,720,862	A	2/1998	Hamamoto	204/403
5,720,924	A	2/1998	Eikmeier	422/102
D392,391	S	3/1998	Douglas	D24/225
D392,740	S	3/1998	Yung	D24/169
5,723,284	A	3/1998	Ye	435/4
5,727,548	A	3/1998	Hill	128/637
5,729,905	A	3/1998	Mathiasmeier	33/3 R
5,730,753	A	3/1998	Morita	606/181
5,733,085	A	3/1998	Shida	411/442
5,733,300	A	3/1998	Pambianchi	606/181
D393,716	S	4/1998	Brenneman	D24/147
D393,717	S	4/1998	Brenneman	D24/147
5,735,868	A	4/1998	Lee	606/189
5,736,103	A	4/1998	Pugh	422/68.1
5,738,244	A	4/1998	Charlton	221/26
5,741,228	A	4/1998	Lambrecht	604/93
5,741,634	A	4/1998	Nozoe	435/4
RE35,803	E	5/1998	Lange	606/182
5,746,217	A	5/1998	Erickson	128/760
5,746,761	A	5/1998	Turchin	606/181
5,746,898	A	5/1998	Preidel	204/403
5,753,429	A	5/1998	Pugh	435/4
5,753,452	A	5/1998	Smith	435/14
5,755,228	A	5/1998	Wilson	600/459
5,755,733	A	5/1998	Morita	606/182
5,758,643	A	6/1998	Wong	600/309
5,759,364	A	6/1998	Charlton	204/403
5,762,770	A	6/1998	Pritchard	204/403
5,770,086	A	6/1998	Indriksons	210/643
5,770,369	A	6/1998	Meade	435/6
5,772,586	A	6/1998	Heinonen	600/300
5,772,677	A	6/1998	Mawhirt	606/181
5,773,270	A	6/1998	D'Orazio	435/177
5,776,157	A	7/1998	Thorne	606/182
5,776,719	A	7/1998	Douglas	435/28
5,779,365	A	7/1998	Takaki	374/161
5,780,304	A	7/1998	Matzinger	436/169
5,782,770	A	7/1998	Mooradian	600/476
5,782,852	A	7/1998	Foggia	606/182
5,788,651	A	8/1998	Weilandt	600/567
5,788,652	A	8/1998	Rahn	600/577
5,789,255	A	8/1998	Yu	536/95
5,794,219	A	8/1998	Brown	705/37
5,795,725	A	8/1998	Buechler	435/7.1
5,795,774	A	8/1998	Matsumoto	435/287.9

(56) **References Cited**

U.S. PATENT DOCUMENTS

5,797,940	A	8/1998	Mawhirt	606/167
5,797,942	A	8/1998	Schraga	606/182
5,798,030	A	8/1998	Raguse	204/403
5,798,031	A	8/1998	Charlton	204/403
5,800,781	A	9/1998	Gavin	422/73
5,801,057	A	9/1998	Smart	436/68
5,807,375	A	9/1998	Gross	604/890.1
5,810,199	A	9/1998	Charlton	221/31
D399,566	S	10/1998	Sohrab	D24/169
5,820,551	A	10/1998	Hill	600/347
5,822,715	A	10/1998	Worthington	702/19
5,823,973	A	10/1998	Racchini	600/573
5,824,491	A	10/1998	Priest	435/28
5,827,181	A	10/1998	Dias	600/322
5,828,943	A	10/1998	Brown	434/258
5,829,589	A	11/1998	Nguyen	206/366
5,830,219	A	11/1998	Bird	606/130
5,832,448	A	11/1998	Brown	705/2
5,840,020	A	11/1998	Heinonen	600/309
5,840,171	A	11/1998	Birch	205/335
5,843,691	A	12/1998	Douglas	435/14
5,843,692	A	12/1998	Phillips	435/14
5,846,216	A	12/1998	Gonzales	604/2
5,846,486	A	12/1998	Pugh	422/56
5,846,490	A	12/1998	Yokota	422/66
5,849,174	A	12/1998	Sanghera	205/775
5,853,373	A	12/1998	Griffith	600/554
5,854,074	A	12/1998	Charlton	436/46
D403,975	S	1/1999	Douglas	D10/81
5,855,377	A	1/1999	Murphy	279/50
5,855,801	A	1/1999	Lin	216/2
5,856,174	A	1/1999	Lipshutz	435/286.5
5,856,195	A	1/1999	Charlton	436/50
5,857,967	A	1/1999	Frid	600/301
5,857,983	A	1/1999	Douglas	600/538
5,858,804	A	1/1999	Zanzucchi	506/9
5,860,922	A	1/1999	Gordon et al.	600/431
5,863,800	A	1/1999	Eikmeier	436/48
5,866,353	A	2/1999	Berneth	435/26
5,868,135	A	2/1999	Kaufman	128/630
5,868,772	A	2/1999	LeVaughn	606/181
5,869,972	A	2/1999	Birch	324/439
5,871,494	A	2/1999	Simons	606/181
5,872,713	A	2/1999	Douglas	702/85
5,873,856	A	2/1999	Hjertman et al.	
5,873,887	A	2/1999	King	606/182
5,876,351	A	3/1999	Rohde	600/523
5,876,957	A	3/1999	Douglas	435/28
5,879,163	A	3/1999	Brown	434/236
5,879,310	A	3/1999	Sopp	600/578
5,879,311	A *	3/1999	Duchon	A61B 5/1411 600/573
5,879,373	A	3/1999	Roeper	606/344
5,880,829	A	3/1999	Kauhaniemi	356/246
5,882,494	A	3/1999	van Antwerp	204/403
5,885,211	A	3/1999	Eppstein	600/309
5,886,056	A	3/1999	Hershkowitz	518/703
5,887,133	A	3/1999	Brown	395/200.3
5,890,128	A	3/1999	Diaz	705/2
RE36,191	E	4/1999	Solomon	395/308
5,891,053	A *	4/1999	Sesekura	600/583
5,892,569	A	4/1999	Van de Velde	351/221
5,893,848	A	4/1999	Negus	606/41
5,893,870	A	4/1999	Talen	606/201
5,897,493	A	4/1999	Brown	600/300
5,897,569	A	4/1999	Kellogg	606/169
5,899,855	A	5/1999	Brown	600/301
5,899,915	A	5/1999	Saadat	606/170
5,900,130	A	5/1999	Benvegnu	204/453
5,902,731	A	5/1999	Ouyang	435/26
5,906,921	A	5/1999	Ikeda	435/25
D411,619	S	6/1999	Duchon	D24/146
5,908,416	A	6/1999	Costello	606/9
5,911,937	A	6/1999	Hekal	264/255
5,912,134	A	6/1999	Shartle	435/7.24
5,913,310	A	6/1999	Brown	128/897
5,916,156	A	6/1999	Hildenbrand	600/347
5,916,229	A	6/1999	Evans	606/171
5,916,230	A	6/1999	Brenneman	606/172
5,918,603	A	7/1999	Brown	128/897
5,919,711	A	7/1999	Boyd	436/178
5,921,963	A	7/1999	Erez	604/192
5,922,188	A	7/1999	Ikeda	204/777.5
5,922,530	A	7/1999	Yu	435/4
5,922,591	A	7/1999	Anderson	435/287.2
RE36,268	E	8/1999	Szuminsky	205/777.5
5,931,794	A	8/1999	Pitesky	600/556
5,933,136	A	8/1999	Brown	345/327
5,935,075	A	8/1999	Casscells et al.	600/474
5,938,635	A	8/1999	Kuhle	604/506
5,938,679	A	8/1999	Freeman	606/181
5,940,153	A	8/1999	Castaneda	349/58
5,942,102	A	8/1999	Hodges	205/775
5,942,189	A	8/1999	Wolfbeis	422/82.08
5,947,957	A	9/1999	Morris	606/13
5,951,300	A	9/1999	Brown	434/236
5,951,492	A	9/1999	Douglas	600/583
5,951,493	A	9/1999	Douglas	600/583
5,951,582	A	9/1999	Thorne	606/182
5,951,836	A	9/1999	McAleer	204/403
5,954,738	A	9/1999	LeVaughn	606/181
5,956,501	A	9/1999	Brown	395/500.32
5,957,846	A	9/1999	Chiang	600/447
5,958,199	A	9/1999	Miyamoto	204/403
5,959,098	A	9/1999	Goldberg	536/25.3
5,960,403	A	9/1999	Brown	705/2
5,961,451	A	10/1999	Reber	600/322
5,964,718	A	10/1999	Duchon	600/583
5,965,380	A	10/1999	Heller	435/14
5,968,063	A	10/1999	Chu	606/185
5,968,760	A	10/1999	Phillips	435/14
5,968,836	A	10/1999	Matzinger	436/169
5,971,941	A	10/1999	Simons	606/573
5,972,199	A	10/1999	Heller	205/777.5
5,972,294	A	10/1999	Smith	422/58
5,972,715	A	10/1999	Celentano	436/164
5,974,124	A	10/1999	Schlueter	379/106.02
5,976,085	A	11/1999	Kimball	600/309
5,983,193	A	11/1999	Heinonen	705/2
5,985,116	A	11/1999	Ikeda	204/403
5,985,559	A	11/1999	Brown	435/6
5,986,754	A	11/1999	Harding	356/246
5,993,400	A	11/1999	Rincoe	600/595
5,993,434	A	11/1999	Dev	604/501
D417,504	S	12/1999	Love	D24/169
5,997,476	A	12/1999	Brown	600/300
5,997,561	A	12/1999	Boecker	606/182
5,997,817	A	12/1999	Crismore	422/58
5,997,818	A	12/1999	Hackner	422/681
6,001,067	A	12/1999	Shults	600/584
6,007,497	A	12/1999	Huitema	600/567
D418,602	S	1/2000	Prokop	D24/169
6,014,577	A	1/2000	Henning	600/345
6,015,392	A	1/2000	Douglas	600/583
6,018,289	A	1/2000	Sekura	340/309.4
6,020,110	A	2/2000	Williams	430/315
6,022,324	A	2/2000	Skinner	600/566
6,022,366	A	2/2000	Schraga	606/181
6,022,748	A	2/2000	Charych	436/527
6,023,629	A	2/2000	Tamada	600/347
6,023,686	A	2/2000	Brown	705/37
6,027,459	A *	2/2000	Shain et al.	600/573
6,030,399	A	2/2000	Ignotz	606/167
6,030,827	A	2/2000	Davis	435/287
6,030,967	A	2/2000	Marui	514/215
6,032,059	A	2/2000	Henning	600/345
6,032,119	A	2/2000	Brown	705/2
6,033,421	A	3/2000	Theiss	606/186
6,033,866	A	3/2000	Guo	435/14
6,036,924	A	3/2000	Simons	422/100
6,037,178	A	3/2000	Leiner	436/50
6,041,253	A	3/2000	Kost	604/20
6,045,567	A	4/2000	Taylor	606/181
6,046,055	A	4/2000	Wolfbeis	436/172

(56) **References Cited**

U.S. PATENT DOCUMENTS

6,048,352	A	4/2000	Douglas	606/181
D424,696	S	5/2000	Ray	D24/169
6,056,701	A	5/2000	Duchon	600/583
6,059,815	A	5/2000	Lee	606/209
6,060,327	A	5/2000	Keen	436/518
6,061,128	A	5/2000	Zweig	356/243.4
6,063,039	A	5/2000	Cunningham	600/573
6,066,103	A	5/2000	Duchon	600/583
6,066,243	A	5/2000	Anderson	422/82.01
6,066,296	A	5/2000	Brady	422/63
6,067,463	A	5/2000	Jeng	600/336
6,068,615	A	5/2000	Brown	604/207
D426,638	S	6/2000	Ray	D24/169
6,070,761	A	6/2000	Bloom	222/81
6,071,249	A	6/2000	Cunningham	600/578
6,071,250	A	6/2000	Douglas	600/583
6,071,251	A	6/2000	Cunningham	600/584
6,071,294	A	6/2000	Simons	606/181
6,071,391	A	6/2000	Gotoh	204/403
6,074,360	A	6/2000	Haar	604/57
6,077,408	A	6/2000	Miyamoto	204/403
6,080,106	A	6/2000	Lloyd	600/300
6,080,172	A	6/2000	Fujiwara	606/166
D428,150	S	7/2000	Ruf	D24/146
6,083,196	A	7/2000	Trautman	604/46
6,083,710	A	7/2000	Heller	435/14
6,084,660	A	7/2000	Shartle	356/39
6,085,576	A	7/2000	Sunshine	73/29.01
6,086,544	A	7/2000	Hibner	600/568
6,086,545	A	7/2000	Roe	600/570
6,086,562	A	7/2000	Jacobsen	604/156
6,090,078	A	7/2000	Erskine	604/198
6,091,975	A	7/2000	Daddona	600/345
6,093,146	A	7/2000	Filangeri	600/300
6,093,156	A	7/2000	Cunningham et al.	600/573
D428,993	S	8/2000	Lubs	D24/165
6,099,484	A	8/2000	Douglas	600/583
6,099,802	A	8/2000	Pugh	422/58
6,100,107	A	8/2000	Lei	438/50
6,101,478	A	8/2000	Brown	705/2
6,102,933	A	8/2000	Lee	606/209
6,103,033	A	8/2000	Say	156/73.1
6,103,509	A	8/2000	Sode	435/190
6,104,940	A	8/2000	Watanabe	600/345
6,106,751	A	8/2000	Talbot	264/81
6,107,083	A	8/2000	Collins	435/288
6,113,578	A	9/2000	Brown	604/207
6,117,155	A	9/2000	Lee	606/189
6,117,630	A	9/2000	Reber	435/4
6,118,126	A	9/2000	Zanzucchi	250/458.1
6,119,033	A	9/2000	Spigelman	600/426
6,120,462	A	9/2000	Hibner	600/566
6,120,676	A	9/2000	Heller	205/777.5
6,121,009	A	9/2000	Heller	435/14
6,122,536	A	9/2000	Sun	600/341
6,126,804	A	10/2000	Andresen	204/601
6,126,899	A	10/2000	Woudenberg	422/50
6,129,823	A	10/2000	Hughes	204/403.01
6,132,449	A	10/2000	Lum	606/181
6,133,837	A	10/2000	Riley	340/573.1
6,134,461	A	10/2000	Say	600/345
6,136,013	A	10/2000	Marshall	606/167
6,139,562	A	10/2000	Mauze	606/171
6,143,164	A	11/2000	Heller	600/583
6,144,837	A	11/2000	Quy	434/307 R
6,144,976	A	11/2000	Silva et al.	708/100
6,149,203	A	11/2000	Hanlon	283/72
6,151,586	A	11/2000	Brown	705/14
6,152,875	A	11/2000	Hakamata	600/319
6,152,942	A	11/2000	Brenneman	606/181
6,153,069	A	11/2000	Pottgen	204/403
RE36,991	E	12/2000	Yamamoto	204/403
6,155,267	A	12/2000	Nelson	128/899
6,155,992	A	12/2000	Henning et al.	600/583
6,156,051	A	12/2000	Schraga	606/181
6,157,442	A	12/2000	Raskas	356/39
6,159,147	A	12/2000	Lichter	600/300
6,159,424	A	12/2000	Kauhaniemi	422/63
6,161,095	A	12/2000	Brown	705/2
6,162,397	A	12/2000	Jurik	422/56
6,162,611	A	12/2000	Heller	435/14
6,167,362	A	12/2000	Brown	703/11
6,167,386	A	12/2000	Brown	705/37
6,168,563	B1	1/2001	Brown	600/301
6,168,957	B1	1/2001	Matzinger	436/518
6,171,325	B1	1/2001	Mauze	606/171
6,172,743	B1	1/2001	Kley et al.	356/39
6,175,752	B1	1/2001	Say	600/345
6,176,847	B1	1/2001	Humphreys	604/246
6,176,865	B1	1/2001	Mauze	606/171
6,177,000	B1	1/2001	Peterson	205/777.5
6,177,931	B1	1/2001	Alexander	725/52
6,183,489	B1	2/2001	Douglas	606/181
6,186,145	B1	2/2001	Brown	128/897
6,190,612	B1	2/2001	Berger	422/82.07
6,191,852	B1	2/2001	Paffhausen	356/244
6,192,891	B1	2/2001	Gravel	128/920
6,193,673	B1	2/2001	Viola	600/568
6,193,873	B1	2/2001	Ohara	205/792
6,194,900	B1	2/2001	Freeman	324/321
6,197,040	B1	3/2001	LeVaughn	606/182
6,197,257	B1	3/2001	Raskas	422/82.05
6,200,773	B1	3/2001	Ouyang	435/26
6,203,504	B1	3/2001	Latterell	600/576
6,206,841	B1	3/2001	Cunningham et al.	600/584
6,210,133	B1	4/2001	Aboul-Hosn	417/423.1
6,210,272	B1	4/2001	Brown	463/1
6,210,369	B1	4/2001	Wilmot	604/157
6,210,420	B1	4/2001	Mauze	606/182
6,210,421	B1	4/2001	Bocker	606/182
6,212,417	B1	4/2001	Ikeda	204/403.14
6,214,626	B1	4/2001	Meller	436/165
6,214,804	B1	4/2001	Felgner	514/44
6,218,571	B1	4/2001	Zheng	562/61
6,219,574	B1	4/2001	Cormier	604/20
6,221,023	B1	4/2001	Matsuba	600/486
6,221,238	B1	4/2001	Grundig	205/777.5
6,224,617	B1	5/2001	Saadat et al.	606/170
6,225,078	B1	5/2001	Ikeda	435/25
6,228,100	B1	5/2001	Schraga	606/183
6,230,051	B1	5/2001	Cormier	604/20
6,230,501	B1	5/2001	Bailey	62/51.1
6,231,531	B1	5/2001	Lum	601/46
6,233,471	B1	5/2001	Berner	600/345
6,233,539	B1	5/2001	Brown	703/11
6,234,772	B1	5/2001	Wampler	417/423.12
6,240,393	B1	5/2001	Brown	705/1
D444,235	S	6/2001	Roberts	D24/169
6,241,862	B1	6/2001	McAleer	204/403
6,242,207	B1	6/2001	Douglas	435/25
6,245,060	B1	6/2001	Loomis	606/9
6,245,215	B1	6/2001	Douglas	205/775
6,246,992	B1	6/2001	Brown	705/2
6,248,065	B1	6/2001	Brown	600/300
6,251,083	B1	6/2001	Yum	600/584
6,251,121	B1	6/2001	Saadat	606/180
6,251,260	B1	6/2001	Heller	205/777.5
6,251,344	B1	6/2001	Goldstein	422/123
D444,557	S	7/2001	Levaughn	D24/146
6,254,831	B1	7/2001	Barnard	422/82.08
6,256,533	B1	7/2001	Vuzhakov	604/21
6,258,111	B1	7/2001	Ross	606/171
6,258,229	B1	7/2001	Winarta	204/403
6,258,254	B1	7/2001	Miyamoto	205/777.5
6,261,241	B1	7/2001	Burbank	600/564
6,261,245	B1	7/2001	Kawai	600/576
6,261,519	B1	7/2001	Harding	422/58
6,264,635	B1	7/2001	Wampler	604/151
6,268,161	B1	7/2001	Han	435/14
6,268,162	B1	7/2001	Phillips	435/14
6,269,314	B1	7/2001	Iitawaki	702/23
6,270,455	B1	8/2001	Brown	600/300
6,270,637	B1	8/2001	Crismore	204/403
6,272,359	B1	8/2001	Kivela	455/567

(56) **References Cited**

U.S. PATENT DOCUMENTS

6,272,364	B1	8/2001	Kurnik	600/345
6,275,717	B1	8/2001	Gross	600/345
6,280,254	B1	8/2001	Wu	439/630
6,281,006	B1	8/2001	Heller	435/287.9
6,283,926	B1	9/2001	Cunningham	600/573
6,283,982	B1	9/2001	Levaughn	606/172
6,284,478	B1	9/2001	Heller	435/14
6,285,448	B1	9/2001	Kuenstner	356/39
6,285,454	B1	9/2001	Douglas	356/446
6,289,254	B1	9/2001	Shimizu	700/96
6,290,683	B1	9/2001	Erez	604/273
6,294,897	B1	9/2001	Champlin	320/153
6,295,506	B1	9/2001	Heinonen	702/104
6,299,578	B1	10/2001	Kurnik	600/309
6,299,596	B1	10/2001	Ding	604/96.01
6,299,757	B1	10/2001	Feldman	205/775
6,302,844	B1	10/2001	Walker	600/300
6,302,855	B1	10/2001	Lav	600/584
6,305,804	B1	10/2001	Rice	351/221
6,306,104	B1	10/2001	Cunningham	600/573
6,306,152	B1	10/2001	Verdonk	606/182
6,306,347	B1	10/2001	Mason	422/58
6,309,351	B1	10/2001	Kurnik	600/309
6,309,535	B1	10/2001	Williams	205/777.5
6,312,612	B1	11/2001	Sherman	216/2
6,315,738	B1	11/2001	Nishikawa	600/583
6,318,970	B1	11/2001	Backhouse	417/92
6,319,210	B1	11/2001	Douglas	600/583
6,322,574	B1	11/2001	Lloyd	606/181
6,322,808	B1	11/2001	Trautman	424/448
6,322,963	B1	11/2001	Bauer	435/4
6,329,161	B1	12/2001	Heller	435/14
6,330,426	B2	12/2001	Brown	434/307 R
6,331,163	B1	12/2001	Kaplan	600/486
6,332,871	B1	12/2001	Douglas	600/583
6,334,363	B1	1/2002	Testud	73/862
6,334,778	B1	1/2002	Brown	434/258
6,334,856	B1	1/2002	Allen	604/191
6,335,203	B1	1/2002	Patel	436/169
6,336,900	B1	1/2002	Alleckson	600/485
6,338,790	B1	1/2002	Feldman	205/777.5
6,346,120	B1	2/2002	Yamazaki	623/3.13
6,349,229	B1	2/2002	Watanabe	600/345
6,350,273	B1	2/2002	Minagawa	606/186
6,350,451	B1	2/2002	Horn	424/184.1
6,352,514	B1	3/2002	Douglas	600/583
6,352,523	B1	3/2002	Brown	604/207
6,353,753	B1	3/2002	Flock	600/473
6,358,196	B1	3/2002	Rayman	
6,364,889	B1 *	4/2002	Kheiri et al.	606/181
6,364,890	B1	4/2002	Lum	606/181
6,368,273	B1	4/2002	Brown	600/300
6,375,469	B1	4/2002	Brown	434/236
6,375,626	B1	4/2002	Allen et al.	600/584
6,375,627	B1 *	4/2002	Mauze et al.	600/584
6,379,301	B1	4/2002	WOrthington	600/309
6,379,317	B1	4/2002	Kintzig	600/573
6,379,324	B1	4/2002	Gartstein	604/22
6,379,969	B1	4/2002	Mauze	436/68
6,381,577	B1	4/2002	Brown	705/2
D456,910	S	5/2002	Clark	D24/225
6,387,709	B1	5/2002	Mason	436/164
6,391,005	B1	5/2002	Lum	604/117
6,395,227	B1	5/2002	Kiser	422/56
6,398,522	B2	6/2002	Skill	417/410.3
6,398,562	B1	6/2002	Butler	439/91
6,399,394	B1	6/2002	Dahm	436/180
6,402,701	B1	6/2002	Kaplan	600/567
6,402,704	B1	6/2002	McMorrow	600/576
6,409,740	B1	6/2002	Kuhr	606/182
6,413,410	B1	7/2002	Hodges	205/775
6,413,411	B1	7/2002	Pottgen	205/777.5
6,415,821	B2	7/2002	Kamholz	137/827
6,419,661	B1	7/2002	Kuhr et al.	
6,420,128	B1	7/2002	Ouyang	435/14
6,421,633	B1	7/2002	Heinonen	703/11
6,423,014	B1	7/2002	Churchill	600/587
6,428,664	B1	8/2002	Bhullar	204/403.03
6,436,055	B1	8/2002	Roe	600/584
6,436,256	B1	8/2002	Williams	204/403.06
6,436,721	B1	8/2002	Kuo	436/514
6,440,645	B1	8/2002	Yon-Hin	430/322
6,444,115	B1	9/2002	Hodges	205/792
6,447,119	B1	9/2002	Stewart et al.	351/212
6,447,265	B1	9/2002	Antaki	417/354
6,451,040	B1	9/2002	Purcell	606/181
6,453,810	B1	9/2002	Rossmeisl	101/123
6,458,258	B2	10/2002	Taniike	204/403
6,461,496	B1	10/2002	Feldman	205/777.5
6,462,162	B2	10/2002	van Antwerp	528/77
6,464,649	B1	10/2002	Duchon	600/583
6,471,903	B2	10/2002	Sherman	264/328.1
6,472,220	B1	10/2002	Simons	436/63
6,475,360	B1	11/2002	Hodges	204/403.14
6,475,372	B1	11/2002	Ohara	205/777.5
6,475,436	B1	11/2002	Schabbach	422/64
6,475,750	B1	11/2002	Han	435/14
6,477,394	B2	11/2002	Rice et al.	600/318
6,477,424	B1	11/2002	Thompson	607/60
6,484,046	B1	11/2002	Say	600/345
6,485,439	B1	11/2002	Roe	600/578
6,485,461	B1	11/2002	Mason	604/132
6,485,923	B1	11/2002	Yani	435/14
6,488,827	B1	12/2002	Shartle	204/403
6,488,872	B1	12/2002	Beebe et al.	264/31
6,488,891	B2	12/2002	Mason	422/58
6,489,133	B2	12/2002	Phillips	435/14
6,491,709	B2	12/2002	Sharma	606/181
6,491,870	B2	12/2002	Patel	422/58
6,494,830	B1	12/2002	Wessel	600/300
6,497,845	B1	12/2002	Sacherer	422/104
6,501,404	B2	12/2002	Walker	341/143
6,501,976	B1	12/2002	Sohrab	600/347
6,503,209	B2	1/2003	Hakky et al.	
6,503,210	B1	1/2003	Hirao	600/576
6,503,231	B1	1/2003	Praunsnitz	604/272
6,503,290	B1	1/2003	Jarosinski	75/252
6,503,381	B1	1/2003	Gotoh	204/403.14
6,506,165	B1	1/2003	Sweeney	600/562
6,506,168	B1	1/2003	Fathallah	600/578
6,506,575	B1	1/2003	Knappe	435/25
6,508,785	B1	1/2003	Eppstein	604/113
6,512,986	B1	1/2003	Harmon	702/84
6,514,270	B1	2/2003	Schraga	606/182
6,514,460	B1	2/2003	Fendrock	422/55
6,519,241	B1	2/2003	Theimer	370/338
6,520,326	B2	2/2003	McIvor	206/305
6,521,110	B1	2/2003	Hodges	204/403.14
6,521,182	B1	2/2003	Shartle	422/58
6,527,521	B2	3/2003	Noda	417/355
6,527,716	B1	3/2003	Eppstein	600/309
6,527,778	B2	3/2003	Athanasiou	606/80
6,529,377	B1	3/2003	Nelson	361/699
6,530,892	B1	3/2003	Kelly	600/583
6,530,937	B1	3/2003	Schraga	606/182
6,531,322	B1	3/2003	Jurik	436/95
6,533,949	B1	3/2003	Yeshurun	216/11
6,537,207	B1	3/2003	Rice	600/121
6,537,242	B1	3/2003	Palmer	604/22
6,537,264	B1	3/2003	Cormier et al.	604/506
6,537,292	B1	3/2003	Lee	606/182
6,540,672	B1	4/2003	Simonsen	600/300
6,540,675	B2 *	4/2003	Aceti et al.	600/309
6,540,762	B1	4/2003	Bertling	606/182
6,540,891	B1	4/2003	Stewart	204/403.14
6,541,266	B2	4/2003	Modzelewski	436/95
6,547,954	B2	4/2003	Ikeda	205/777.5
6,549,796	B2	4/2003	Sohrab	600/345
6,551,494	B1	4/2003	Heller	205/777.5
6,553,244	B2	4/2003	Lesho	600/347
6,554,381	B2	4/2003	Locher	347/7
6,555,061	B1	4/2003	Leong	422/58
D475,136	S	5/2003	Taniguchi	D24/165
6,558,320	B1	5/2003	Causey	600/300

(56) **References Cited**

U.S. PATENT DOCUMENTS

6,558,361	B1	5/2003	Yeshurun	604/272
6,558,402	B1	5/2003	Chelak	606/182
6,558,528	B1	5/2003	Matzinger	205/777.5
6,560,471	B1	5/2003	Heller	600/347
6,561,978	B1	5/2003	Conn	600/309
6,561,989	B2	5/2003	Whitson	600/573
6,562,210	B1	5/2003	Bhullar	204/403.3
6,565,509	B1	5/2003	Say	600/365
6,565,808	B2	5/2003	Hudak	422/58
6,569,157	B1	5/2003	Shain	606/12
6,571,128	B2 *	5/2003	Lebel et al.	607/60
6,571,651	B1	6/2003	Hodges	73/864.72
6,572,566	B2	6/2003	Effenhauser	600/584
6,572,822	B2	6/2003	Jurik	422/56
6,574,490	B2	6/2003	Abbink	600/316
6,575,905	B2	6/2003	Knobbe	600/365
6,576,101	B1	6/2003	Heller	204/403.14
6,576,117	B1	6/2003	Iketaki et al.	205/777.5
6,576,416	B2	6/2003	Haviland	435/4
6,579,690	B1	6/2003	Bonnecaze et al.	435/14
6,582,573	B2	6/2003	Douglas	204/403.1
6,584,338	B1	6/2003	Van Muiswinkel	600/419
D477,670	S	7/2003	Jurik	D24/225
6,586,199	B2	7/2003	Ouyang	435/26
6,587,705	B1	7/2003	Kim	600/347
6,589,260	B1	7/2003	Schmelzeisen-Redeker et al.	606/181
6,589,261	B1	7/2003	Abulhaj	606/181
6,591,124	B2 *	7/2003	Sherman et al.	600/345
6,591,125	B1	7/2003	Buse	600/347
6,592,744	B1	7/2003	Hodges	205/775
6,592,745	B1	7/2003	Feldman	205/777.5
6,595,919	B2	7/2003	Berner	600/365
6,599,407	B2	7/2003	Taniike	204/403.1
6,599,693	B1	7/2003	Webb	435/4
6,599,769	B2	7/2003	Kondo	438/28
6,601,534	B2	8/2003	Hebrank	119/6.8
6,602,205	B1	8/2003	Erickson	600/573
6,602,268	B2	8/2003	Kuhr	606/181
6,602,678	B2	8/2003	Kwon	435/14
6,604,050	B2	8/2003	Trippel	702/19
6,607,362	B2	8/2003	Lum	417/53
6,607,494	B1	8/2003	Fowler	600/570
6,607,658	B1	8/2003	Heller	205/777.5
6,612,111	B1	9/2003	Hodges	60/593
6,616,616	B2	9/2003	Fritz	600/583
6,616,819	B1	9/2003	Liamos	204/403.02
6,618,934	B1	9/2003	Feldman	29/830
6,620,112	B2	9/2003	Klitmose	600/583
6,620,310	B1	9/2003	Ohara	205/792
6,623,501	B2	9/2003	Heller	606/181
6,626,851	B2	9/2003	Hirao	600/576
6,632,349	B1	10/2003	Hodges	205/792
6,635,222	B2	10/2003	Kent	422/22
6,638,415	B1	10/2003	Hodges	205/775
6,638,772	B1	10/2003	Douglas	436/518
6,641,533	B2	11/2003	Causey	600/300
6,645,142	B2	11/2003	Braig	600/300
6,645,219	B2	11/2003	Roe	606/182
6,645,368	B1	11/2003	Beatty	205/792
6,649,416	B1	11/2003	Kauer	436/164
6,650,915	B2	11/2003	Routt	600/319
6,652,720	B1	11/2003	Mansouri	204/403.11
6,652,734	B1	11/2003	Hodges	205/777.5
6,652,814	B1	11/2003	House	422/104
D484,600	S	12/2003	Kaar	D24/169
6,656,428	B1	12/2003	Clark et al.	422/404
6,656,697	B1	12/2003	Ouyang	435/7.9
6,656,702	B1	12/2003	Yugawa	435/26
6,659,966	B2	12/2003	Essenpreis	600/583
6,660,018	B2	12/2003	Lum	606/181
6,662,439	B1	12/2003	Bhullar	29/825
6,669,669	B2	12/2003	Flaherty	604/132
6,671,527	B2	12/2003	Peterson	600/316
D484,980	S	1/2004	Hartwein	D24/165
6,673,617	B2	1/2004	Patel	436/8
6,676,995	B2	1/2004	Dick	427/286
6,679,841	B2	1/2004	Bojan	600/309
6,679,852	B1	1/2004	Schmelzeisen-Redeker et al.	600/583
6,682,933	B2	1/2004	Patel	436/8
6,689,411	B2	2/2004	Dick	427/2.13
6,706,000	B2 *	3/2004	Perez et al.	600/583
6,706,049	B2	3/2004	Moerman	606/181
6,706,159	B2 *	3/2004	Moerman et al.	204/403.03
6,706,232	B2	3/2004	Hasegawa	264/403.09
6,709,692	B2	3/2004	Sudor	427/2.1
6,713,660	B1	3/2004	Roe	604/361
6,716,577	B1	4/2004	Yu	435/6
6,719,887	B2	4/2004	Hasegawa	204/403.09
6,719,923	B2	4/2004	Stiene	252/511
6,721,586	B2	4/2004	Kiser	600/345
6,723,046	B2	4/2004	Lichtenstein	600/300
6,723,111	B2	4/2004	Abulhaj	606/181
6,723,371	B2	4/2004	Chih-hui	472/2.13
6,723,500	B2	4/2004	Yu	435/4
6,726,818	B2	4/2004	Cui et al.	204/403.01
6,729,546	B2	5/2004	Roustaei	235/462.45
6,730,494	B1	5/2004	Toranto	435/28
6,731,966	B1	5/2004	Spigelman	600/407
6,733,493	B2	5/2004	Gruzdev	606/9
6,736,777	B2	5/2004	Kim	600/365
6,738,654	B2	5/2004	Sohrab	600/345
6,740,215	B1	5/2004	Nakaminami et al.	204/403.14
6,743,211	B1	6/2004	PraUSnitz	604/239
6,743,597	B1	6/2004	Guo	435/14
6,743,635	B2	6/2004	Neel	436/95
6,746,872	B2	6/2004	Zheng	436/16
6,749,618	B2	6/2004	Levaughn	606/182
6,749,740	B2	6/2004	Liamos	205/792
6,749,792	B2	6/2004	Olson	264/328.1
6,749,887	B1	6/2004	Dick	427/2.13
6,751,491	B2	6/2004	Lew	600/345
6,752,817	B2	6/2004	Flora	606/181
6,753,187	B2	6/2004	Cizdziel	436/169
6,759,190	B2	7/2004	Lin	435/4
6,764,496	B2	7/2004	Schraga	606/182
6,764,581	B1	7/2004	Forrow	204/403
6,767,441	B1	7/2004	Cai	204/403.03
6,773,671	B1	8/2004	Lewis	422/58
6,776,888	B2	8/2004	Yamamoto	204/403.06
6,780,645	B2	8/2004	Hayter	436/8
6,780,647	B2	8/2004	Fujiwara	436/169
6,783,502	B2	8/2004	Orloff	600/583
6,783,537	B1	8/2004	Kuhr	606/182
6,784,274	B2	8/2004	van Antwerp	528/77
6,786,874	B2	9/2004	Grace	600/573
6,787,013	B2	9/2004	Chang	204/412
6,787,109	B2	9/2004	Haar	422/82.05
6,790,327	B2	9/2004	Ikeda	204/403.1
6,790,599	B1	9/2004	Madou	430/320
6,792,791	B2	9/2004	Sato	73/1.02
6,793,632	B2	9/2004	Sohrab	600/573
6,793,633	B2	9/2004	Douglas	600/583
6,793,802	B2	9/2004	Lee	205/777.5
6,797,150	B2	9/2004	Kermani	205/777.5
6,800,488	B2	10/2004	Khan	436/166
6,801,041	B2	10/2004	Karinka	324/444
6,801,804	B2	10/2004	Miller	604/20
6,802,199	B2	10/2004	Hilgers	72/370.1
6,802,811	B1	10/2004	Slepian	600/309
6,802,957	B2	10/2004	Jung	205/777.5
6,805,780	B1	10/2004	Ryu	204/403.01
6,808,499	B1	10/2004	Churchill	600/587
6,808,908	B2	10/2004	Yao	435/181
6,808,937	B2	10/2004	Ligler	436/518
6,809,807	B1	10/2004	Erickson	356/213
6,811,406	B2	11/2004	Grube	439/66
6,811,557	B2	11/2004	Schraga	606/182
6,811,659	B2	11/2004	Vachon	204/224
6,811,753	B2	11/2004	Hirao	422/101
6,811,792	B2	11/2004	Roser	424/423
6,812,031	B1	11/2004	Carlsson	436/52
6,814,843	B1	11/2004	Bhullar	204/403.01

(56) **References Cited**

U.S. PATENT DOCUMENTS

6,814,844	B2	11/2004	Bhullar	204/403.1
6,814,845	B2	11/2004	Wilson	204/486
6,815,186	B2	11/2004	Clark	435/183
6,816,742	B2	11/2004	Kim	600/345
6,818,180	B2	11/2004	Douglas	422/58
6,821,483	B2	11/2004	Phillips	422/58
6,823,750	B2	11/2004	Hodges	73/864.72
6,825,047	B1	11/2004	Woudenberg	436/518
6,827,250	B2	12/2004	Uhland	228/110.1
6,827,829	B2	12/2004	Kawanaka	204/403.02
6,829,507	B1	12/2004	Lidman	607/19
6,830,551	B1	12/2004	Uchigaki	600/584
6,830,668	B2	12/2004	Musho	204/400
6,830,669	B2	12/2004	Miyazaki	204/409
6,830,934	B1	12/2004	Hardling	436/166
6,833,540	B2	12/2004	MacKenzie	250/214
6,835,184	B1	12/2004	Sage	604/46
6,835,553	B2	12/2004	Han	435/14
6,835,570	B2	12/2004	Patel	436/8
6,837,858	B2	1/2005	Cunningham	600/573
6,837,976	B2	1/2005	Cai	204/403.14
6,837,988	B2	1/2005	Leong	205/792
6,840,912	B2	1/2005	Kloepfer	600/583
6,841,052	B2	1/2005	Musho	204/401
6,843,254	B2	1/2005	Tapper	128/898
6,843,902	B1	1/2005	Penner	205/76
6,847,451	B2	1/2005	Pugh	356/436
6,849,052	B2	2/2005	Uchigaki	600/584
6,849,168	B2	2/2005	Crumly	204/416
6,849,216	B2	2/2005	Rappin	264/134
6,849,456	B2	2/2005	Patel	436/8
6,850,790	B2	2/2005	Berner	600/347
6,852,119	B1	2/2005	Abulhaj	606/182
6,852,212	B2	2/2005	Maxwell	205/775
6,852,500	B1	2/2005	Hoss	435/14
6,853,854	B1	2/2005	Proniewiez	600/319
6,855,243	B2	2/2005	Khan	205/777.5
6,856,125	B2	2/2005	Kermani	324/71.1
6,856,928	B2	2/2005	Harmon	702/84
6,858,015	B2	2/2005	List	600/583
6,858,401	B2	2/2005	Phillips	435/14
6,859,738	B2	2/2005	Bush	702/25
6,862,466	B2	3/2005	Ackerman	600/347
6,862,534	B2	3/2005	Sterling	702/23
6,863,800	B2	3/2005	Karinka	205/777.5
6,863,801	B2	3/2005	Hodges	205/792
6,865,408	B1	3/2005	Abbink	600/310
6,866,641	B2	3/2005	Marshall	600/583
6,866,675	B2	3/2005	Perez	606/181
6,866,758	B2	3/2005	Bhullar	204/403.2
6,866,822	B1	3/2005	House	422/82.05
6,869,418	B2	3/2005	Marano-Ford	604/192
6,872,200	B2	3/2005	Mann	604/890.1
6,872,297	B2	3/2005	Mansouri	205/775
6,872,298	B2	3/2005	Kermani	205/777.5
6,872,299	B2	3/2005	Kermani	205/777.5
6,872,358	B2	3/2005	Hagen	422/61
6,875,208	B2	4/2005	Santini	604/890.1
6,875,223	B2	4/2005	Argauer	606/181
6,875,327	B1	4/2005	Miyazaki	204/403.14
6,875,613	B2	4/2005	Shartle	436/63
6,878,120	B2	4/2005	Roe	600/583
6,878,251	B2	4/2005	Hodges	204/403.14
6,878,255	B1	4/2005	Wang	204/452
6,878,262	B2	4/2005	Taniike	205/777.5
6,880,968	B1	4/2005	Haar	374/131
6,881,203	B2	4/2005	Delmore	604/272
6,881,322	B2	4/2005	Tokunaga	205/775
6,881,378	B1	4/2005	Zimmer	422/58
6,881,541	B2	4/2005	Petersen	435/6
6,881,550	B2	4/2005	Phillips	435/14
6,881,551	B2	4/2005	Heller	435/14
6,881,578	B2	4/2005	Otake	436/44
6,882,940	B2	4/2005	Potts	702/23
6,884,592	B2	4/2005	Matzinger	435/7.1
6,885,196	B2	4/2005	Taniike	324/444
6,885,883	B2	4/2005	Parris	600/347
6,887,202	B2	5/2005	Currie	600/309
6,887,239	B2	5/2005	Elstrom	606/41
6,887,253	B2	5/2005	Schraga	606/181
6,887,254	B1	5/2005	Curie	606/181
6,887,426	B2	5/2005	Phillips	422/56
6,887,709	B2	5/2005	Leong	436/8
6,889,069	B2	5/2005	Routt	600/319
6,890,319	B1	5/2005	Crocker	604/131
6,890,421	B2	5/2005	Ohara	205/777.5
6,890,484	B2	5/2005	Bautista	422/58
6,891,936	B2	5/2005	Kai	379/106.02
6,892,085	B2	5/2005	McIvor	600/347
6,893,396	B2	5/2005	Schulze	600/300
6,893,545	B2	5/2005	Gotoh	204/403.5
6,893,552	B1	5/2005	Wang	205/777.5
6,895,263	B2	5/2005	Shin	600/316
6,895,264	B2	5/2005	Rice	600/319
6,895,265	B2	5/2005	Silver	600/345
6,896,793	B2	5/2005	Erdosy	205/775
6,897,788	B2	5/2005	Khair	340/870.16
6,902,905	B2	6/2005	Burson	435/14
6,904,301	B2	6/2005	Raskas	600/310
6,905,733	B2	6/2005	Russel	427/393.5
6,908,008	B2	6/2005	Pugh	221/135
6,908,535	B2	6/2005	Rankin	204/406
6,908,591	B2	6/2005	MacPhee	422/22
6,908,593	B1	6/2005	Shartle	422/58
6,911,130	B2	6/2005	Brenneman	204/400
6,911,131	B2	6/2005	Miyazaki	204/403.14
6,911,621	B2	6/2005	Bhullar	219/121.69
6,911,937	B1	6/2005	Sparrow	342/188
6,913,210	B2	7/2005	Baasch	239/407
6,913,668	B2	7/2005	Matzinger	156/256
6,916,410	B2	7/2005	Katsuki	204/403
6,918,901	B1	7/2005	Theeuwes	604/500
6,918,918	B1	7/2005	Schraga	606/182
6,922,576	B2	7/2005	Raskas	600/316
6,922,578	B2	7/2005	Eppstein	600/347
6,923,764	B2	8/2005	Aceti	600/309
6,923,894	B2	8/2005	Huang	204/403.06
6,923,936	B2	8/2005	Swanson	422/22
6,924,093	B2	8/2005	Haviland	435/4
6,925,317	B1	8/2005	Samuels	600/344
6,925,393	B1	8/2005	Kalatz	702/27
6,929,631	B1	8/2005	Brugger	604/502
6,929,649	B2	8/2005	Pugh	606/182
6,929,650	B2	8/2005	Fukuzawa	606/182
6,931,327	B2	8/2005	Goode	702/22
6,931,328	B2	8/2005	Braig	702/23
RE38,803	E	9/2005	Rodgers, Jr.	
6,939,310	B2	9/2005	Matzinger	600/573
6,939,312	B2	9/2005	Hodges	600/583
6,939,450	B2	9/2005	Karinka	204/409
6,939,685	B2	9/2005	Ouyang	435/26
6,940,591	B2	9/2005	Sopp	356/244
6,942,518	B2	9/2005	Liamos	439/495
6,942,769	B2	9/2005	Cheng	204/400
6,942,770	B2	9/2005	Cai	204/403.04
6,944,486	B2	9/2005	Braig	600/310
6,945,943	B2	9/2005	Pugh	600/584
6,946,067	B2	9/2005	Hodges	205/792
6,946,098	B2	9/2005	Miekka	422/22
6,946,299	B2	9/2005	Neel	436/95
6,949,111	B2	9/2005	Schraga	606/182
6,949,221	B2	9/2005	Kiser	422/56
6,951,631	B1	10/2005	Catt	422/56
6,951,728	B2	10/2005	Qian	435/14
6,952,603	B2	10/2005	Gerber	600/310
6,952,604	B2	10/2005	DeNuzzio	600/345
6,953,693	B2	10/2005	Neel	436/149
6,954,662	B2	10/2005	Freger	600/316
6,958,072	B2	10/2005	Schraga	606/182
6,958,129	B2	10/2005	Galen	422/57
6,958,809	B2	10/2005	Sterling	356/39
6,959,211	B2	10/2005	Rule	600/310
6,959,247	B2	10/2005	Neel	702/19
6,960,287	B2	11/2005	Charlton	205/775

(56) **References Cited**

U.S. PATENT DOCUMENTS

6,960,289	B2	11/2005	Hodges	205/778
6,960,323	B2	11/2005	Guo	422/60
6,964,871	B2	11/2005	Bell	436/95
6,965,791	B1	11/2005	Hitchcock	600/345
6,966,880	B2	11/2005	Boecker	600/583
6,966,977	B2	11/2005	Hasegawa	204/403.07
6,967,105	B2	11/2005	Nomura	436/169
6,968,375	B1	11/2005	Brown	709/224
6,969,359	B2	11/2005	Duchon	600/583
6,969,450	B2	11/2005	Taniike	204/403.01
6,969,451	B2	11/2005	Shin	204/412
6,973,706	B2	12/2005	Say	29/595
6,975,893	B2	12/2005	Say	600/347
6,977,032	B2	12/2005	Hasegawa	204/403.05
6,977,722	B2	12/2005	Wohlstadter et al.	356/246
6,979,544	B2	12/2005	Keen	435/6
6,979,571	B2	12/2005	Modzelewski	436/164
6,982,027	B2	1/2006	Yagi	204/403.06
6,982,431	B2	1/2006	Modlin	250/573
6,983,176	B2	1/2006	Gardner	600/310
6,983,177	B2	1/2006	Rule	600/310
6,984,307	B2	1/2006	Zweig	205/777.5
6,986,777	B2	1/2006	Kim	606/182
6,986,869	B2	1/2006	Tuohy	422/56
6,988,996	B2	1/2006	Roe	600/584
6,989,243	B2	1/2006	Yani	435/14
6,989,891	B2	1/2006	Braig	356/39
6,990,365	B1	1/2006	Parker	600/328
6,990,366	B2	1/2006	Say	600/345
6,990,367	B2	1/2006	Kiser	600/345
6,990,849	B2	1/2006	Bohm	73/53.01
6,991,918	B2	1/2006	Keith	435/31
6,991,940	B2	1/2006	Carroll	436/514
6,994,825	B2	2/2006	Haviland	422/58
6,997,317	B2	2/2006	Catelli	206/438
6,997,343	B2	2/2006	May	221/232
6,997,344	B2	2/2006	Brown	221/258
6,997,936	B2	2/2006	Marshall	606/181
6,998,247	B2	2/2006	Monfre	435/14
6,998,248	B2	2/2006	Yani	435/14
6,999,810	B2	2/2006	Berner	600/345
7,001,343	B2	2/2006	Erickson	600/573
7,001,344	B2	2/2006	Freeman	600/583
7,003,337	B2	2/2006	Harjunmaa	600/316
7,003,340	B2	2/2006	Say	600/345
7,003,341	B2	2/2006	Say	600/345
7,004,928	B2	2/2006	Aceti	604/191
7,005,048	B1	2/2006	Watanabe	204/403.04
7,005,273	B2	2/2006	Heller	435/25
7,005,459	B2	2/2006	Hekal	523/102
7,005,857	B2	2/2006	Stiene	324/449
7,006,857	B2	2/2006	Braig	600/310
7,006,858	B2	2/2006	Silver	600/345
7,008,384	B2	3/2006	Tapper	600/573
7,010,432	B2	3/2006	Kermani	702/19
7,011,630	B2	3/2006	Desai	600/309
7,011,954	B2	3/2006	Ouyang	435/7.9
7,014,615	B2	3/2006	Erickson	600/573
7,015,262	B2	3/2006	Leong	523/205
7,016,713	B2	3/2006	Gardner	600/310
7,018,568	B2	3/2006	Tierney	252/511
7,018,848	B2	3/2006	Douglas	436/524
7,022,217	B2	4/2006	Hodges	205/777.5
7,022,218	B2	4/2006	Taniike	205/777.5
7,022,286	B2	4/2006	Lemke	422/67
7,024,236	B2	4/2006	Ford	600/345
7,024,248	B2	4/2006	Penner	607/60
7,024,399	B2	4/2006	Sumner	706/45
7,025,425	B2	4/2006	Kovatchev	300/365
7,025,774	B2	4/2006	Freeman	606/181
7,027,848	B2	4/2006	Robinson	600/310
7,029,444	B2	4/2006	Shin	600/365
7,033,322	B2	4/2006	Silver	600/486
7,033,371	B2	4/2006	Alden	606/181
7,039,560	B2	5/2006	Kawatahara	702/187
7,041,057	B1	5/2006	Faupel	600/365
7,041,063	B2	5/2006	Abreu	600/549
7,041,068	B2	5/2006	Freeman	600/583
7,041,210	B2	5/2006	Hodges	205/792
7,041,254	B2	5/2006	Haviland	422/58
7,041,468	B2	5/2006	Drucker	435/14
7,043,287	B1	5/2006	Khalil	600/310
7,043,821	B2	5/2006	Hodges	29/594
7,044,911	B2	5/2006	Drinan	600/300
7,045,046	B2	5/2006	Chambers	204/400
7,045,054	B1	5/2006	Buck	205/778
7,045,097	B2	5/2006	Kovacs	422/82.08
7,045,310	B2	5/2006	Buck	435/7.93
7,045,361	B2	5/2006	Heiss	436/172
7,047,070	B2	5/2006	Wilkinson	604/20
7,047,795	B2	5/2006	Sato	73/64.56
7,049,087	B2	5/2006	Jenny	435/13
7,049,130	B2	5/2006	Carroll	435/287.2
7,050,843	B2	5/2006	Shartle	600/345
7,051,495	B2	5/2006	Lang	53/475
7,052,268	B2	5/2006	Powell	425/542
7,052,591	B2	5/2006	Gao	204/490
7,052,652	B2	5/2006	Zanzucchi	422/82.05
7,052,864	B2	5/2006	Durkop	435/25
7,054,682	B2	5/2006	Young	604/20
7,054,759	B2	5/2006	Fukunaga	702/23
D522,656	S	6/2006	Orr	D24/169
D523,555	S	6/2006	Loerwald	D24/146
7,056,425	B2	6/2006	Hasegawa	204/403.04
7,056,495	B2	6/2006	Roser	424/45
7,058,437	B2	6/2006	Buse	600/347
7,059,352	B2	6/2006	Bohm	137/828
7,060,059	B2	6/2006	Keith	604/504
7,060,168	B2	6/2006	Taniike	204/403.04
7,060,192	B2	6/2006	Yuzhakov	216/11
7,061,593	B2	6/2006	Braig	356/39
7,063,234	B2	6/2006	Giraud	221/271
7,063,774	B2	6/2006	Bhullar	204/403.02
7,063,775	B2	6/2006	Yamaoka	204/403.06
7,063,776	B2	6/2006	Huang	204/403.14
7,066,884	B2	6/2006	Custer	600/309
7,066,885	B2	6/2006	Erickson	600/309
7,070,564	B2	7/2006	Matzinger	600/300
7,070,680	B2	7/2006	Bae	204/403.04
7,073,246	B2	7/2006	Bhullar	29/595
7,074,307	B2	7/2006	Simpson	204/403.04
7,074,308	B2	7/2006	Mao	204/403.14
7,077,328	B2	7/2006	Krishnaswamy	235/472.01
7,077,828	B2	7/2006	Kuhr	604/207
7,078,480	B2	7/2006	Nagel	530/322
7,079,252	B1	7/2006	Debreezeny	356/451
7,081,188	B1	7/2006	Cho	204/403.04
7,083,712	B2	8/2006	Morita	205/775
7,086,277	B2	8/2006	Tess	73/53.01
7,087,149	B1	8/2006	Muguruma	205/778
7,090,764	B2	8/2006	Iyengar	205/775
7,096,053	B2	8/2006	Loeb	600/317
7,096,124	B2	8/2006	Sterling	702/23
7,097,631	B2	8/2006	Trautman	604/46
7,098,038	B2	8/2006	Fukuoka	436/164
7,103,578	B2	9/2006	Beck	705/75
7,105,066	B2	9/2006	Schraga	606/182
7,107,253	B1	9/2006	Sumner	706/45
7,108,680	B2	9/2006	Rohr	604/151
7,108,778	B2	9/2006	Simpson	205/778
7,109,271	B2	9/2006	Liu	525/283
7,110,112	B2	9/2006	Uchida	356/364
7,110,803	B2	9/2006	Shults	600/347
7,112,265	B1	9/2006	McAleer	204/403.09
7,112,451	B2	9/2006	Takahashi	436/514
7,113,172	B2	9/2006	Hohl	345/168
7,115,362	B2	10/2006	Douglas	435/4
7,118,351	B2	10/2006	Effenhauser	417/208
7,118,667	B2	10/2006	Lee	205/777.5
7,118,668	B1	10/2006	Edelbrock	205/777.5
7,118,916	B2	10/2006	Matzinger	436/34
7,118,919	B2	10/2006	Yatscoff	436/56
7,120,483	B2	10/2006	Russell	600/345
7,122,102	B2	10/2006	Wogoman	204/400

(56) **References Cited**

U.S. PATENT DOCUMENTS

7,122,110	B2	10/2006	Deng	205/777.5
7,122,111	B2	10/2006	Tokunaga	205/792
7,125,481	B2	10/2006	Musho	205/775
7,129,038	B2	10/2006	Gopalan	435/4
RE39,390	E	11/2006	Hasegawa	204/403.09
D531,725	S	11/2006	Loerwald	D24/146
7,131,342	B2	11/2006	Hodges	73/864.72
7,131,984	B2	11/2006	Sato	606/182
7,132,041	B2	11/2006	Deng	205/777.5
7,133,710	B2	11/2006	Acosta	600/316
7,134,550	B2	11/2006	Groth	206/366
7,134,999	B2	11/2006	Brauker	600/309
7,135,100	B1	11/2006	Lau	204/403.14
7,137,957	B2	11/2006	Erickson	600/573
7,138,041	B2	11/2006	Su	204/403.04
7,138,089	B2	11/2006	Aitken	422/82.01
7,141,034	B2	11/2006	Eppstein	604/22
7,141,058	B2	11/2006	Briggs	606/181
7,144,404	B2	12/2006	Whitson	606/181
7,144,485	B2	12/2006	Hsu	204/403.02
7,144,495	B2	12/2006	Teodorezyk	205/792
7,144,496	B2	12/2006	Meserol	205/792
7,144,709	B2	12/2006	Ouyang	435/7.9
7,147,825	B2	12/2006	Matsuda	422/58
7,150,755	B2	12/2006	Levaughn	606/181
7,150,975	B2	12/2006	Tamada	435/14
7,150,995	B2	12/2006	Xie	436/67
7,153,696	B2	12/2006	Fukuoka	436/164
7,155,371	B2	12/2006	Kawatahara	702/187
7,156,117	B2	1/2007	Bohm	137/14
7,156,810	B2	1/2007	Cho	600/365
7,157,723	B2	1/2007	Colvin	250/458.1
7,160,251	B2	1/2007	Neel	600/365
7,160,313	B2	1/2007	Galloway	606/167
7,160,678	B1	1/2007	Kayyem	435/6
7,162,289	B2	1/2007	Shah	600/345
7,163,616	B2	1/2007	Vreeke	205/777.5
7,166,074	B2	1/2007	Reghabi	600/365
7,166,208	B2	1/2007	Zweig	205/777.5
7,167,734	B2	1/2007	Khalil	600/310
7,167,735	B2	1/2007	Uchida	600/310
7,167,818	B2	1/2007	Brown	703/11
7,169,116	B2	1/2007	Day	600/583
7,169,117	B2	1/2007	Allen	600/584
7,169,289	B2	1/2007	Schulein	205/777.5
7,169,600	B2	1/2007	Hoss	435/287.1
7,172,728	B2	2/2007	Otake	422/58
7,174,199	B2	2/2007	Berner	600/347
7,175,641	B1	2/2007	Schraga	606/181
7,175,642	B2	2/2007	Briggs	606/181
7,179,233	B2	2/2007	Chang	600/584
7,182,910	B2	2/2007	Allen	422/50
7,183,068	B2	2/2007	Burson	435/14
7,183,102	B2	2/2007	Monfre et al.	200/51.09
7,188,034	B2	3/2007	Staib	702/22
7,189,576	B2	3/2007	Fukuoka	436/170
7,190,988	B2	3/2007	Say	600/345
7,192,405	B2	3/2007	DeNuzzio	600/583
7,192,450	B2	3/2007	Brauker	623/23.76
7,195,704	B2	3/2007	Kermani et al.	205/777.5
7,198,606	B2	4/2007	Boecker	600/583
7,199,594	B2	4/2007	Kermani	324/663
7,202,854	B2	4/2007	Hohl	345/168
7,206,620	B2	4/2007	Erickson	600/310
7,206,623	B2	4/2007	Blank	600/344
D542,681	S	5/2007	Young	D10/80
7,211,052	B2	5/2007	Roe	600/584
7,211,096	B2	5/2007	Kuhr	606/182
7,212,925	B2	5/2007	Genshaw	702/23
7,213,720	B2	5/2007	Giraud	220/839
7,215,982	B2	5/2007	Oshima	600/310
7,215,983	B2	5/2007	Cho	600/316
7,223,248	B2	5/2007	Erickson	600/584
7,225,008	B1	5/2007	Ward	600/345
D543,878	S	6/2007	Castillo	D10/81
D545,438	S	6/2007	Huang	D24/186
7,225,535	B2	6/2007	Feldman	29/831
7,226,414	B2	6/2007	Ballerstadt	600/365
7,226,461	B2	6/2007	Boecker	606/181
7,226,978	B2	6/2007	Tapsak	525/296
7,227,156	B2	6/2007	Colvin	250/458.1
7,228,159	B2	6/2007	Petersson	600/316
7,228,162	B2	6/2007	Ward	600/345
7,228,163	B2	6/2007	Ackerman	600/347
7,229,458	B2	6/2007	Freeman	606/181
7,232,451	B2	6/2007	Boecker	606/181
7,232,510	B2	6/2007	Miyazaki	204/403.1
7,233,816	B2	6/2007	Blank	600/310
7,235,056	B2	6/2007	Duchon	600/583
7,235,170	B2	6/2007	Watanabe	205/777.5
7,235,378	B2	6/2007	Yonehara	435/14
7,236,812	B1	6/2007	Ballerstadt	600/316
7,236,814	B2	6/2007	Shioi	600/344
D545,705	S	7/2007	Voege	D10/81
D546,216	S	7/2007	Bolognesi	D10/81
D546,218	S	7/2007	Grasso	D10/81
2,747,138	A1	7/2007	Reghabi	600/365
7,238,192	B2	7/2007	List	606/182
7,238,534	B1	7/2007	Zimmer	436/169
7,241,265	B2	7/2007	Cummings	600/300
7,244,264	B2	7/2007	Roe	606/181
7,244,265	B2	7/2007	Freeman	606/181
7,244,266	B2	7/2007	Garthe	606/181
7,247,144	B2	7/2007	Douglas	600/583
7,250,037	B2	7/2007	Shermer	604/134
7,250,056	B2	7/2007	Hamamoto	606/181
7,250,095	B2	7/2007	Black	204/403.14
7,250,105	B1	7/2007	Davies	205/777.5
7,251,513	B2	7/2007	Kondoh	600/310
7,251,514	B2	7/2007	Cho	600/316
7,251,515	B2	7/2007	Cho	600/316
7,251,516	B2	7/2007	Walker	600/316
7,251,517	B2	7/2007	Cho	600/316
7,251,518	B2	7/2007	Herrmann	600/322
7,252,804	B2	8/2007	Miyashita	422/104
7,254,426	B2	8/2007	Cho	600/316
7,254,427	B2	8/2007	Cho	600/316
7,254,428	B2	8/2007	Cho	600/316
7,254,429	B2	8/2007	Schurman	600/316
7,254,430	B2	8/2007	Cho	600/316
7,254,432	B2	8/2007	Fine	600/335
7,258,673	B2	8/2007	Racchini	600/58
7,258,693	B2	8/2007	Freeman	606/181
7,262,061	B2	8/2007	Petrich	436/169
7,264,139	B2	9/2007	Brickwood	221/270
7,264,627	B2	9/2007	Perez	606/181
7,266,400	B2	9/2007	Fine	600/316
7,267,665	B2	9/2007	Steil	604/131
7,267,750	B2	9/2007	Watanabe	204/403.04
7,270,247	B2	9/2007	Charlton	221/59
7,271,912	B2	9/2007	Sterling	356/436
7,273,484	B2	9/2007	Thoes	606/181
7,276,027	B2	10/2007	Haar	600/309
7,276,029	B2	10/2007	Goode	600/365
7,276,146	B2	10/2007	Wilsey	205/792
7,276,147	B2	10/2007	Wilsey	205/792
7,276,380	B2	10/2007	Fukuyama	436/164
7,277,740	B2	10/2007	Rohleder	600/316
7,278,983	B2	10/2007	Ireland	604/66
7,279,130	B2	10/2007	Brown	422/64
7,282,058	B2	10/2007	Levin	606/181
7,287,318	B2	10/2007	Bhullar	29/825
7,288,073	B2	10/2007	Effenhauser	600/584
7,288,102	B2	10/2007	Griffin	606/182
7,288,174	B2	10/2007	Cui	204/403.14
7,289,836	B2	10/2007	Colvin	600/316
7,291,117	B2	11/2007	Boecker	600/583
7,291,159	B2	11/2007	Schmelzeisen-Redeker et al.	606/181
7,291,256	B2	11/2007	Teodorezyk	205/777.5
7,291,497	B2	11/2007	Holmes	435/287.2
7,294,246	B2	11/2007	Gundel	204/403.14
7,295,867	B2	11/2007	Berner	600/345
7,297,122	B2	11/2007	Boecker	600/583

(56) **References Cited**

U.S. PATENT DOCUMENTS

7,297,151	B2	11/2007	Boecker	606/181
7,297,152	B2	11/2007	Fukuzawa	606/181
7,297,241	B2	11/2007	Kontschieder	204/403.01
7,297,248	B2	11/2007	Bae	205/777.5
7,297,627	B2	11/2007	Shah	438/622
7,299,079	B2	11/2007	Rebec	600/316
7,299,080	B2	11/2007	Acosta	600/316
7,299,081	B2	11/2007	Mace	600/345
7,299,082	B2	11/2007	Feldman	600/347
7,300,402	B2	11/2007	Iliff	600/300
7,301,629	B2	11/2007	Bambot	356/337
7,303,573	B2	12/2007	D'Agostino	606/181
7,303,726	B2	12/2007	McAllister	422/68.1
7,303,922	B2	12/2007	Jeng	436/164
7,305,896	B2	12/2007	Howell	73/864.02
7,306,560	B2	12/2007	Iliff	600/300
7,308,164	B1	12/2007	Banks	385/12
7,308,292	B2	12/2007	Colvin	600/310
7,310,542	B2	12/2007	Jeon	600/344
7,310,543	B2	12/2007	Smart	600/345
7,310,544	B2	12/2007	Brister	600/345
7,311,718	B2	12/2007	Schraga	606/181
7,311,812	B2	12/2007	Forrow	204/403.06
7,312,042	B1	12/2007	Petyt	435/7.1
7,313,425	B2	12/2007	Finarov	600/310
7,314,453	B2	1/2008	Kuo	600/584
7,315,752	B2	1/2008	Kraemer	600/316
7,316,700	B2	1/2008	Alden	606/181
7,316,766	B2	1/2008	Chen	204/403.01
7,316,929	B2	1/2008	Purcell	436/8
7,317,938	B2	1/2008	Lorenz	600/316
7,317,939	B2	1/2008	Fine	600/322
7,322,942	B2	1/2008	Roe	600/583
7,322,996	B2	1/2008	Taylor	606/181
7,322,997	B2	1/2008	Shi	606/181
7,322,998	B2	1/2008	Kuhr	606/182
7,323,098	B2	1/2008	Miyashita	205/777.5
7,323,141	B2	1/2008	Kirchhevel	422/68.1
7,323,315	B2	1/2008	Marfurt	435/7.25
7,324,012	B2	1/2008	Mann	340/870.07
7,328,052	B2	2/2008	Samsoondar	600/310
7,331,931	B2	2/2008	Freeman	600/583
7,335,292	B2	2/2008	Hodges	205/775
7,335,294	B2	2/2008	Heller	205/792
7,337,918	B2	3/2008	Fowler	221/65
7,338,639	B2	3/2008	Burke	422/82.1
7,343,188	B2	3/2008	Sohrab	600/345
7,344,499	B1	3/2008	Prausnitz	600/309
7,344,500	B2	3/2008	Talbot	600/365
7,344,507	B2	3/2008	Briggs	600/583
7,344,626	B2	3/2008	Harding	204/403.01
7,347,925	B2	3/2008	Hsieh	205/777.5
7,347,926	B2	3/2008	Morita	205/792
7,347,973	B2	3/2008	Douglas	422/61
RE40,198	E	4/2008	Buck	205/777.5
7,351,213	B2	4/2008	Wong	600/584
7,351,323	B2	4/2008	Iketaki	205/777.5
7,351,375	B2	4/2008	Noda	422/82.01
7,351,770	B2	4/2008	Liu	525/283
7,357,808	B2	4/2008	Kennedy	606/181
7,357,851	B2	4/2008	Reid	204/403.04
7,361,182	B2	4/2008	Fukuda	606/181
7,361,307	B2	4/2008	Schartle	422/82.01
7,371,247	B2	5/2008	Boecker	606/181
7,372,277	B2	5/2008	Diamond	324/444
7,374,544	B2	5/2008	Freeman	600/583
7,374,546	B2	5/2008	Roe	600/583
7,378,007	B2	5/2008	Moerman	204/403.03
7,378,270	B2	5/2008	Azarnia	435/287.2
7,402,616	B2	7/2008	Rodgers	523/160
7,404,815	B2	7/2008	Kollias	604/501
7,410,468	B2	8/2008	Freeman	600/583
7,429,630	B2	9/2008	Liu	525/283
7,431,814	B2	10/2008	Hodges	204/403.02
7,431,820	B2	10/2008	Hodges	205/777.5
7,438,694	B2	10/2008	Boozer	600/583
D579,652	S	11/2008	Lim	D3/201
D579,653	S	11/2008	Lim	D3/201
7,462,265	B2	12/2008	Leach	204/403.14
7,465,380	B2	12/2008	Rodgers	204/403.14
7,468,125	B2	12/2008	Kraft	205/792
D585,314	S	1/2009	Schvetz	D10/78
7,473,264	B2	1/2009	Allen	606/181
7,474,390	B2	1/2009	Robinson	356/42
7,474,391	B2	1/2009	Baskeyfield	356/42
7,481,776	B2	1/2009	Boecker	600/583
7,481,818	B2	1/2009	Allen	606/181
D586,465	S	2/2009	Faulkner	D24/146
D586,466	S	2/2009	Smith	D24/186
D586,678	S	2/2009	Schvetz	D10/81
D586,916	S	2/2009	Faulkner	D24/146
7,485,128	B2	2/2009	Boecker	606/181
7,491,178	B2	2/2009	Boecker	600/583
7,498,132	B2	3/2009	Yu	435/6
7,501,052	B2	3/2009	Iyengar	205/777.5
7,501,093	B2	3/2009	Demelo	422/58
7,521,019	B2	4/2009	Polak	422/82.06
7,524,293	B2	4/2009	Freeman	600/583
7,537,571	B2	5/2009	Freeman	600/583
7,547,287	B2	6/2009	Boecker	600/583
7,548,772	B2	6/2009	Shartle	600/345
7,553,511	B2	6/2009	Hleong	427/2.28
7,563,232	B2	7/2009	Freeman	600/583
D598,126	S	8/2009	Alvarez-Icaza	D24/225
7,572,356	B2	8/2009	Rodgers	204/403.05
7,575,558	B2	8/2009	Boecker	600/573
D600,349	S	9/2009	Bell	D24/169
D600,812	S	9/2009	Lei	D24/169
D600,813	S	9/2009	Bell	D24/169
D601,255	S	9/2009	Schvetz	D24/169
D601,258	S	9/2009	Bell	D24/169
7,582,063	B2	9/2009	Wurster	600/584
7,582,099	B2	9/2009	Freeman	606/181
7,586,590	B2	9/2009	Baskeyfield	356/42
7,588,670	B2	9/2009	Rodgers	204/403.14
7,589,828	B2	9/2009	Robinson	356/42
7,592,151	B2	9/2009	Liu	435/14
7,593,097	B2	9/2009	Robinson	356/42
7,604,592	B2	10/2009	Freeman	600/309
7,604,722	B2	10/2009	Hodges	204/403.02
7,608,175	B2	10/2009	Hodges	204/403.02
7,618,522	B2	11/2009	Davies	204/403.14
7,648,468	B2	1/2010	Boecker	600/583
7,648,469	B2	1/2010	Boecker	600/583
7,653,492	B2	1/2010	Davies	702/22
7,654,127	B2	2/2010	Krulevitch	73/1.16
7,655,119	B2	2/2010	Davies	204/403.14
7,665,303	B2	2/2010	Bohm	60/643
7,666,287	B2	2/2010	Zhao	204/600
D611,151	S	3/2010	Lei	D24/169
D611,372	S	3/2010	Salter	D10/81
D611,489	S	3/2010	Bell	D14/486
D611,853	S	3/2010	Salter	D10/81
D612,274	S	3/2010	Heidemann	D10/78
D612,275	S	3/2010	Salter	D10/81
D612,279	S	3/2010	Heidemann	D10/103
7,674,232	B2	3/2010	Boecker	600/583
7,682,318	B2	3/2010	Alden	600/583
7,713,214	B2	5/2010	Freeman et al.	600/583
7,749,174	B2	7/2010	Alden et al.	
7,833,172	B2	11/2010	Hein et al.	600/583
7,879,058	B2	2/2011	Ikeda	606/182
7,901,365	B2	3/2011	Freeman et al.	600/583
7,976,778	B2	7/2011	Drucker et al.	
8,062,235	B2	11/2011	Planman et al.	
8,079,960	B2	12/2011	Briggs et al.	600/583
8,162,968	B2	4/2012	Boozer et al.	606/182
8,197,421	B2	6/2012	Freeman et al.	
8,206,319	B2	6/2012	Freeman et al.	600/583
8,231,548	B2	7/2012	Hoenes	600/583
8,251,922	B2	8/2012	List et al.	600/584
8,282,576	B2	10/2012	Marsot et al.	
8,388,639	B2	3/2013	Nicholls et al.	
8,491,500	B2	7/2013	Briggs et al.	

(56) **References Cited**

U.S. PATENT DOCUMENTS

2001/0011157	A1	8/2001	Latterell	600/576
2001/0016682	A1	8/2001	Berner	600/345
2001/0017269	A1	8/2001	Heller	205/777.5
2001/0018353	A1	8/2001	Ishigaki	455/566
2001/0023349	A1	9/2001	Van Tassel et al.	606/53
2001/0027328	A1	10/2001	Lum	606/186
2001/0031931	A1	10/2001	Cunningham	600/573
2001/0037072	A1	11/2001	Virtanen	
2001/0037355	A1	11/2001	Britt	709/201
2001/0042004	A1	11/2001	Taub	705/11
2001/0045355	A1	11/2001	Gephart	204/400
2001/0054319	A1	12/2001	Heller	73/849
2002/0002326	A1	1/2002	Causey	600/300
2002/0002344	A1	1/2002	Douglas	600/583
2002/0004196	A1	1/2002	Whitson	600/573
2002/0016568	A1	2/2002	Lebel	604/131
2002/0016606	A1	2/2002	Moerman	606/181
2002/0016923	A1	2/2002	Knaus	713/200
2002/0019606	A1	2/2002	Lebel	604/66
2002/0019747	A1	2/2002	Ware	705/2
2002/0019748	A1	2/2002	Brown	705/2
2002/0025469	A1	2/2002	Heller	429/43
2002/0029058	A1	3/2002	Levaughn	606/181
2002/0040208	A1	4/2002	Flaherty	604/288.01
2002/0040230	A1	4/2002	Kuhr	606/181
2002/0042090	A1	4/2002	Heller	435/14
2002/0042594	A1	4/2002	Lum	604/117
2002/0044890	A1	4/2002	Black	422/56
2002/0052618	A1	5/2002	Haar et al.	
2002/0053523	A1	5/2002	Liamos	205/787
2002/0057993	A1	5/2002	Maisey	422/82.01
2002/0058902	A1	5/2002	Kollias et al.	604/20
2002/0076349	A1	6/2002	Aitken	422/58
2002/0078091	A1	6/2002	Vu	707/513
2002/0081559	A1	6/2002	Brown	434/307 R
2002/0081588	A1	6/2002	Lumley-Woodyear	435/6
2002/0082543	A1	6/2002	Park	604/21
2002/0084196	A1	7/2002	Liamos	205/792
2002/0087056	A1	7/2002	Aceti	
2002/0092612	A1	7/2002	Davies	156/292
2002/0096543	A1*	7/2002	Juselius	A61J 7/0409 222/631
2002/0099308	A1	7/2002	Bojan	600/573
2002/0103499	A1	8/2002	Perez	606/182
2002/0109600	A1	8/2002	Mault et al.	
2002/0120216	A1	8/2002	Fritz	600/583
2002/0120261	A1	8/2002	Morris	606/41
2002/0123335	A1	9/2002	Luna	455/419
2002/0130042	A1*	9/2002	Moerman et al.	204/403.01
2002/0133377	A1	9/2002	Brown	705/3
2002/0136667	A1	9/2002	Subramanian	422/100
2002/0136863	A1	9/2002	Subramanian	428/156
2002/0137998	A1	9/2002	Smart	600/347
2002/0138040	A1	9/2002	Flora	604/116
2002/0141032	A1	10/2002	Guarr et al.	359/265
2002/0148739	A2	10/2002	Liamos	205/787
2002/0156355	A1	10/2002	Gough	600/345
2002/0160520	A1	10/2002	Orloff	436/72
2002/0161289	A1	10/2002	Hopkins	600/322
2002/0168290	A1	11/2002	Yuzhakov	422/56
2002/0169393	A1	11/2002	Cunningham	600/573
2002/0169394	A1	11/2002	Eppstein	600/573
2002/0176984	A1	11/2002	Smart	428/336
2002/0177761	A1	11/2002	Orloff	600/309
2002/0177763	A1	11/2002	Burns	600/345
2002/0188224	A1	12/2002	Roe	600/584
2003/0014010	A1	1/2003	Carpenter	604/117
2003/0018282	A1	1/2003	Effenhauser	600/583
2003/0018300	A1	1/2003	Duchon	604/164.01
2003/0028125	A1	2/2003	Yuzhakov	
2003/0028126	A1	2/2003	List	600/583
2003/0032077	A1	2/2003	Itoh	435/14
2003/0038047	A1	2/2003	Sleva	206/370
2003/0050537	A1	3/2003	Wessel	600/300
2003/0050573	A1	3/2003	Kuhr	600/567
2003/0050656	A1	3/2003	Schraga	606/182
2003/0057391	A1	3/2003	Krulevitch	251/11
2003/0060730	A1	3/2003	Perez	600/576
2003/0069509	A1	4/2003	Matzinger et al.	600/504
2003/0069753	A1	4/2003	Brown	705/2
2003/0072647	A1	4/2003	Lum	415/1
2003/0073089	A1	4/2003	Mauze	435/6
2003/0073229	A1	4/2003	Greenstein	435/287.2
2003/0073931	A1	4/2003	Boecker et al.	
2003/0083685	A1	5/2003	Freeman	606/181
2003/0083686	A1	5/2003	Freeman	606/181
2003/0088160	A1	5/2003	Halleck	600/300
2003/0088191	A1	5/2003	Freeman	600/583
2003/0089730	A1	5/2003	May, Sr.	221/232
2003/0092982	A1	5/2003	Eppstein	
2003/0093010	A1	5/2003	Essenpreis	600/583
2003/0100040	A1	5/2003	Bonnecaze	435/14
2003/0106810	A1	6/2003	Douglas	205/777.5
2003/0109777	A1	6/2003	Kloepfer	600/367
2003/0109860	A1	6/2003	Black	606/10
2003/0111357	A1	6/2003	Black	205/775
2003/0113827	A1	6/2003	Burkoth	435/14
2003/0116447	A1	6/2003	Sturridge	205/777.5
2003/0120297	A1	6/2003	Beyerlein	606/185
2003/0135333	A1	7/2003	Aceti	702/31
2003/0136189	A1	7/2003	Lauman	73/304 C
2003/0139653	A1	7/2003	Manser	600/300
2003/0143113	A2	7/2003	Yuzhakov	422/56
2003/0144608	A1	7/2003	Kojima	600/583
2003/0144609	A1	7/2003	Kennedy	600/583
2003/0146110	A1	8/2003	Karinka	205/777.5
2003/0149348	A1	8/2003	Raskas	600/310
2003/0149377	A1	8/2003	Erickson	600/573
2003/0150745	A1	8/2003	Teodorczyk et al.	
2003/0153900	A1	8/2003	Aceti	604/890.1
2003/0159944	A1	8/2003	Pottgen	205/777.5
2003/0163351	A1	8/2003	Brown	705/2
2003/0175806	A1*	9/2003	Rule et al.	435/7.1
2003/0178322	A1	9/2003	Iyengar	205/775
2003/0191376	A1	10/2003	Samuels	600/309
2003/0191415	A1	10/2003	Moerman	600/584
2003/0195435	A1	10/2003	Williams	600/583
2003/0195540	A1	10/2003	Moerman	606/181
2003/0199744	A1	10/2003	Buse	600/347
2003/0199789	A1	10/2003	Boecker	600/575
2003/0199790	A1	10/2003	Boecker	600/576
2003/0199791	A1	10/2003	Boecker	600/576
2003/0199891	A1	10/2003	Argauer	606/181
2003/0199893	A1	10/2003	Boecker	606/181
2003/0199894	A1	10/2003	Boecker	606/181
2003/0199895	A1	10/2003	Boecker	606/181
2003/0199896	A1	10/2003	Boecker	606/181
2003/0199897	A1	10/2003	Boecker	606/181
2003/0199898	A1	10/2003	Boecker	606/181
2003/0199899	A1	10/2003	Boecker	606/181
2003/0199900	A1	10/2003	Boecker	606/181
2003/0199901	A1	10/2003	Boecker	606/181
2003/0199902	A1	10/2003	Boecker	606/181
2003/0199903	A1	10/2003	Boecker	606/181
2003/0199904	A1	10/2003	Boecker	606/181
2003/0199905	A1	10/2003	Boecker	606/181
2003/0199906	A1	10/2003	Boecker	606/181
2003/0199907	A1	10/2003	Boecker	606/181
2003/0199908	A1	10/2003	Boecker	606/181
2003/0199909	A1	10/2003	Boecker	606/181
2003/0199910	A1	10/2003	Boecker	606/181
2003/0199911	A1	10/2003	Boecker	606/181
2003/0199912	A1	10/2003	Pugh	606/182
2003/0201194	A1	10/2003	Heller	205/777.5
2003/0203352	A1	10/2003	Haviland	435/4
2003/0206828	A1	11/2003	Bell	422/44
2003/0208140	A1	11/2003	Pugh	600/584
2003/0210811	A1	11/2003	Dubowsky	382/128
2003/0211619	A1	11/2003	Olson et al.	436/44
2003/0212344	A1	11/2003	Yuzhakov	600/583
2003/0212345	A1	11/2003	McAllister	600/584
2003/0212346	A1	11/2003	McAllister	600/584
2003/0212347	A1	11/2003	Sohrab	600/584
2003/0212379	A1	11/2003	Bylund	604/504

(56) **References Cited**

U.S. PATENT DOCUMENTS

2003/0212423	A1	11/2003	Pugh	606/181
2003/0212424	A1	11/2003	Briggs	606/181
2003/0212579	A1	11/2003	Brown	705/2
2003/0216767	A1	11/2003	List	606/181
2003/0217918	A1	11/2003	Davies	204/403.14
2003/0220552	A1	11/2003	Reghabi	600/365
2003/0220663	A1	11/2003	Fletcher	606/182
2003/0223906	A1	12/2003	McAllister	422/58
2003/0225317	A1	12/2003	Schell	600/300
2003/0225429	A1	12/2003	Garthe	606/182
2003/0225430	A1	12/2003	Schraga	606/182
2003/0228637	A1	12/2003	Wang	435/7.9
2003/0229514	A2	12/2003	Brown	705/2
2003/0232370	A1	12/2003	Trifiro	435/6
2003/0233055	A1	12/2003	Erickson	600/573
2003/0233112	A1	12/2003	Alden et al.	606/181
2004/0006285	A1	1/2004	Douglas	600/583
2004/0007585	A1	1/2004	Griffith	221/232
2004/0009100	A1	1/2004	Simons	422/102
2004/0010279	A1	1/2004	Freeman	606/182
2004/0015064	A1	1/2004	Parsons	600/347
2004/0019250	A1	1/2004	Catelli	600/1
2004/0019259	A1	1/2004	Brown	600/300
2004/0026243	A1	2/2004	Davies	204/403.14
2004/0026244	A1	2/2004	Hodges	204/409
2004/0030353	A1	2/2004	Schmelzeisen-Redeker et al.	606/201
2004/0031682	A1	2/2004	Wilsey	204/403.1
2004/0034318	A1	2/2004	Fritz	604/19
2004/0038045	A1	2/2004	Smart	428/446
2004/0039303	A1	2/2004	Wurster	600/584
2004/0039342	A1	2/2004	Eppstein	604/200
2004/0039407	A1	2/2004	Schraga	606/181
2004/0039408	A1	2/2004	Abulhaj	606/181
2004/0049219	A1	3/2004	Briggs	606/181
2004/0049220	A1	3/2004	Boecker	606/181
2004/0050694	A1	3/2004	Yang	204/403.02
2004/0054267	A1	3/2004	Feldman	600/316
2004/0055898	A1	3/2004	Heller	205/777.5
2004/0059256	A1	3/2004	Perez	600/583
2004/0060818	A1	4/2004	Feldman	204/403.01
2004/0061841	A1	4/2004	Black	355/30
2004/0064068	A1	4/2004	DeNuzzio	600/583
2004/0065669	A1	4/2004	Giraud et al.	
2004/0068283	A1	4/2004	Fukuzawa et al.	606/181
2004/0069657	A1	4/2004	Hodges	205/787
2004/0087990	A1	5/2004	Boecker	606/181
2004/0092842	A1	5/2004	Boecker	600/575
2004/0092994	A1	5/2004	Briggs	606/181
2004/0092995	A1	5/2004	Boecker	606/181
2004/0096991	A1	5/2004	Zhang	436/518
2004/0098009	A1	5/2004	Boecker	606/181
2004/0098010	A1	5/2004	Davison	606/181
2004/0102803	A1	5/2004	Boecker	606/183
2004/0106855	A1	6/2004	Brown	600/301
2004/0106858	A1	6/2004	Say	600/345
2004/0106859	A1	6/2004	Say	600/345
2004/0106860	A1	6/2004	Say	600/345
2004/0106904	A1	6/2004	Gonnelli	604/173
2004/0106941	A1	6/2004	Roe	606/181
2004/0107116	A1	6/2004	Brown	705/2
2004/0115754	A1	6/2004	Chang	435/14
2004/0115831	A1	6/2004	Meathrel	436/514
2004/0116780	A1	6/2004	Brown	600/300
2004/0116829	A1	6/2004	Raney	600/573
2004/0117207	A1	6/2004	Brown	705/2
2004/0117208	A1	6/2004	Brown	705/2
2004/0117209	A1	6/2004	Brown	705/2
2004/0117210	A1	6/2004	Brown	705/2
2004/0122339	A1	6/2004	Roe	
2004/0127818	A1	7/2004	Roe	600/583
2004/0127819	A1	7/2004	Roe	600/583
2004/0127928	A1	7/2004	Whitson	606/181
2004/0127929	A1	7/2004	Roe	606/181
2004/0132167	A1	7/2004	Rule	435/287.1
2004/0133125	A1	7/2004	Miyashita	600/573
2004/0133127	A1	7/2004	Roe	600/583
2004/0137640	A1	7/2004	Hirao	436/514
2004/0138541	A1	7/2004	Ward	600/345
2004/0138588	A1	7/2004	Saikley	600/583
2004/0138688	A1	7/2004	Giraud	606/181
2004/0146958	A1	7/2004	Bae	435/14
2004/0154932	A1	8/2004	Deng	205/777.5
2004/0157017	A1	8/2004	Mauze	428/35.7
2004/0157149	A1	8/2004	Hofmann	430/131
2004/0157319	A1	8/2004	Keen	435/287.2
2004/0157338	A1	8/2004	Burke	436/147
2004/0157339	A1	8/2004	Burke	436/149
2004/0158137	A1	8/2004	Eppstein	600/347
2004/0158271	A1	8/2004	Hamamoto	606/181
2004/0161737	A1	8/2004	Yang	435/5
2004/0162473	A1	8/2004	Sohrab	600/345
2004/0162474	A1	8/2004	Kiser	600/345
2004/0162506	A1	8/2004	Duchon	600/583
2004/0162573	A1	8/2004	Keheiri	606/182
2004/0167383	A1	8/2004	Kim	600/365
2004/0171057	A1	9/2004	Yang	435/6
2004/0171968	A1	9/2004	Katsuki	600/583
2004/0172000	A1	9/2004	Roe	604/361
2004/0173472	A1	9/2004	Jung	205/777.5
2004/0173488	A1	9/2004	Griffin	206/363
2004/0176705	A1	9/2004	Stevens	600/584
2004/0176732	A1	9/2004	Frazier	604/345
2004/0178066	A1	9/2004	Miyazaki	204/403.01
2004/0178067	A1	9/2004	Miyazaki	204/403.1
2004/0178216	A1	9/2004	Brickwood	221/268
2004/0180379	A1	9/2004	van Duyne	435/7.1
2004/0182703	A1	9/2004	Bell	204/403.11
2004/0185568	A1	9/2004	Matsumoto	436/8
2004/0186359	A1	9/2004	Beaudoin	600/310
2004/0186394	A1	9/2004	Roe	600/598
2004/0186500	A1	9/2004	Koilke	606/181
2004/0193201	A1	9/2004	Kim	606/181
2004/0193377	A1	9/2004	Brown	702/19
2004/0194302	A1	10/2004	Bhullar	29/847
2004/0197231	A1	10/2004	Katsuki	422/68.1
2004/0197821	A1	10/2004	Bauer	437/7.1
2004/0199062	A1	10/2004	Petersson	600/316
2004/0199409	A1	10/2004	Brown	705/3
2004/0200720	A1	10/2004	Musho	204/403.01
2004/0200721	A1	10/2004	Bhullar	204/403.01
2004/0202576	A1	10/2004	Aceti	422/82.05
2004/0204662	A1	10/2004	Perez	600/583
2004/0206625	A1	10/2004	Bhullar	204/403.1
2004/0206636	A1	10/2004	Hodges	205/792
2004/0206658	A1	10/2004	Hammerstedt	206/524.1
2004/0209307	A1	10/2004	Valkirs	435/7.1
2004/0209350	A1	10/2004	Sakata	435/287.1
2004/0209354	A1	10/2004	Mathies	435/287.2
2004/0210279	A1	10/2004	Gruzdev	607/89
2004/0211666	A1	10/2004	Pamidi	204/403.01
2004/0214253	A1	10/2004	Paek	435/7.92
2004/0215224	A1	10/2004	Sakata	606/181
2004/0215225	A1	10/2004	Nakayama	606/182
2004/0216516	A1	11/2004	Sato	73/64.56
2004/0217019	A1	11/2004	Cai	205/792
2004/0219500	A1	11/2004	Brown	434/307 R
2004/0219535	A1	11/2004	Bell	435/6
2004/0220456	A1	11/2004	Eppstein	600/309
2004/0220495	A1	11/2004	Cahir	600/562
2004/0220564	A1	11/2004	Ho	606/47
2004/0220603	A1	11/2004	Rutynowski	606/181
2004/0222092	A1	11/2004	Musho	204/401
2004/0224369	A1	11/2004	Cai	435/7.7
2004/0225230	A1	11/2004	Liamos	600/583
2004/0225311	A1	11/2004	Levaughn	606/181
2004/0225312	A1	11/2004	Orloff	606/182
2004/0230216	A1	11/2004	Levaughn	606/181
2004/0231983	A1	11/2004	Shen	204/403.01
2004/0231984	A1	11/2004	Lauks	204/416
2004/0232009	A1	11/2004	Okuda	205/789
2004/0236250	A1	11/2004	Hodges	600/583
2004/0236251	A1	11/2004	Roe	600/583

(56) **References Cited**

U.S. PATENT DOCUMENTS

2004/0236268	A1	11/2004	Mitragotri	604/20
2004/0236362	A1	11/2004	Schraga	606/181
2004/0238357	A1	12/2004	Bhullar	204/400
2004/0238358	A1	12/2004	Forrow	204/403.01
2004/0238359	A1	12/2004	Ikeda	204/403.1
2004/0241746	A1	12/2004	Adlassnig	435/7.1
2004/0242977	A1	12/2004	Dosmann	600/315
2004/0243164	A1	12/2004	D'Agostino	606/181
2004/0243165	A1	12/2004	Koike	606/181
2004/0245101	A1	12/2004	Willner	204/403
2004/0248282	A1	12/2004	Sobha	435/287.2
2004/0248312	A1	12/2004	Vreeke	436/95
2004/0249254	A1	12/2004	Racchini	600/347
2004/0249310	A1	12/2004	Shartle	600/583
2004/0249311	A1	12/2004	Haar	600/584
2004/0249405	A1	12/2004	Watanabe	606/181
2004/0249406	A1	12/2004	Griffin	606/182
2004/0251131	A1	12/2004	Ueno	204/403
2004/0253634	A1	12/2004	Wang	435/7.1
2004/0254434	A1	12/2004	Goodnow	600/365
2004/0254599	A1	12/2004	Lipoma	606/181
2004/0256228	A1	12/2004	Huang	204/434
2004/0256248	A1	12/2004	Burke	205/792
2004/0256685	A1	12/2004	Chou	257/414
2004/0258564	A1	12/2004	Charlton	422/58
2004/0260204	A1	12/2004	Boecker	600/584
2004/0260324	A1	12/2004	Fukuzawa	606/181
2004/0260325	A1	12/2004	Kuhr	606/181
2004/0260326	A1	12/2004	Lipoma	606/182
2004/0260511	A1	12/2004	Burke	702/182
2004/0267105	A1	12/2004	Monfre	600/344
2004/0267160	A9	12/2004	Perez	600/583
2004/0267229	A1	12/2004	Moerman	604/500
2004/0267299	A1	12/2004	Kuriger	606/181
2004/0267300	A1	12/2004	Mace	606/182
2005/0000806	A1	1/2005	Hsieh	203/403.1
2005/0000807	A1	1/2005	Wang	204/403.81
2005/0000808	A1	1/2005	Cui	203/403.14
2005/0003470	A1	1/2005	Nelson	435/14
2005/0004437	A1	1/2005	Kaufmann	600/300
2005/0004494	A1	1/2005	Perez	600/583
2005/0008537	A1	1/2005	Mosolu	422/56
2005/0008851	A1	1/2005	Ezoe	428/336
2005/0009191	A1	1/2005	Swenson	436/43
2005/0010090	A1	1/2005	Acosta	600/316
2005/0010093	A1	1/2005	Ford	600/345
2005/0010134	A1	1/2005	Douglas	600/573
2005/0010137	A1	1/2005	Hodges	600/583
2005/0010198	A1	1/2005	Marchitto	606/9
2005/0011759	A1	1/2005	Moerman	204/403.03
2005/0013731	A1	1/2005	Burke	422/56
2005/0014997	A1	1/2005	Ruchti	600/310
2005/0015020	A1	1/2005	Levaughn	600/583
2005/0016844	A1	1/2005	Burke	204/403.1
2005/0019212	A1	1/2005	Bhullar	422/56
2005/0019219	A1	1/2005	Oshiman	422/82.12
2005/0019805	A1	1/2005	Groll	435/6
2005/0019945	A1	1/2005	Groll	436/169
2005/0019953	A1	1/2005	Groll	436/514
2005/0021066	A1	1/2005	Kuhr	606/181
2005/0027181	A1	2/2005	Goode, Jr.	600/365
2005/0027211	A1	2/2005	Kuhr	600/583
2005/0027562	A1	2/2005	Brown	705/2
2005/0033340	A1	2/2005	Lipoma	606/181
2005/0033341	A1	2/2005	Vreeke	606/181
2005/0034983	A1	2/2005	Chambers	204/403.01
2005/0036020	A1	2/2005	Li	347/100
2005/0036146	A1	2/2005	Braig	356/246
2005/0036906	A1	2/2005	Nakahara et al.	422/58
2005/0036909	A1	2/2005	Erickson	422/61
2005/0037482	A1	2/2005	Braig	435/287
2005/0038329	A1	2/2005	Morris	600/319
2005/0038330	A1	2/2005	Jansen	600/345
2005/0038463	A1	2/2005	Davar	606/181
2005/0038464	A1	2/2005	Schraga	606/182
2005/0038465	A1	2/2005	Schraga	606/182
2005/0038674	A1	2/2005	Braig	705/2
2005/0042766	A1	2/2005	Ohman	436/174
2005/0043894	A1	2/2005	Fernandez	702/19
2005/0043965	A1	2/2005	Heller	705/2
2005/0045476	A1	3/2005	Neel	204/403.2
2005/0049472	A1	3/2005	Manda	600/345
2005/0049473	A1	3/2005	Desai	600/347
2005/0050859	A1	3/2005	Coppeta	53/471
2005/0054082	A1	3/2005	Pachl	435/287.2
2005/0054908	A1	3/2005	Blank	600/316
2005/0059872	A1	3/2005	Shartle	600/347
2005/0059895	A1	3/2005	Brown	600/481
2005/0060194	A1	3/2005	Brown	705/2
2005/0061668	A1	3/2005	Brenneman	204/403.01
2005/0064528	A1	3/2005	Kwon	435/14
2005/0067280	A1	3/2005	Reid	204/403.14
2005/0067737	A1	3/2005	Rappin	264/272.19
2005/0070771	A1	3/2005	Rule	600/316
2005/0070819	A1	3/2005	Poux	600/576
2005/0070945	A1	3/2005	Schraga	606/182
2005/0072670	A1	4/2005	Hasegawa	204/403.01
2005/0077176	A1	4/2005	Hodges	204/403.01
2005/0077584	A1	4/2005	Uhland	257/414
2005/0079542	A1	4/2005	Cullen	435/7.1
2005/0080652	A1	4/2005	Brown	705/2
2005/0085839	A1	4/2005	Allen	606/181
2005/0085840	A1	4/2005	Yi	606/182
2005/0086083	A1	4/2005	Brown	705/2
2005/0090754	A1	4/2005	Wolf	600/509
2005/0090850	A1	4/2005	Toes	606/182
2005/0096520	A1	5/2005	Maekawa	600/365
2005/0096565	A1	5/2005	Chang	600/584
2005/0096586	A1	5/2005	Trautman	604/46
2005/0096587	A1	5/2005	Santini, Jr.	604/66
2005/0096686	A1	5/2005	Allen	606/181
2005/0098431	A1	5/2005	Hodges	204/403.01
2005/0098432	A1	5/2005	Grundel	204/403.2
2005/0098433	A1	5/2005	Grundel	204/403.2
2005/0098434	A1	5/2005	Grundel	204/403.02
2005/0100880	A1	5/2005	Chang	435/4
2005/0101841	A9	5/2005	Kaylor	600/300
2005/0101979	A1	5/2005	Alden	606/181
2005/0101980	A1	5/2005	Alden	606/181
2005/0101981	A1	5/2005	Alden	606/181
2005/0103624	A1	5/2005	Bhullar	204/403.01
2005/0106713	A1	5/2005	Phan	435/287.2
2005/0109637	A1	5/2005	Iyengar	205/775
2005/0112712	A1	5/2005	Ouyang	435/14
2005/0112782	A1	5/2005	Buechler	436/518
2005/0113658	A1	5/2005	Jacobson	600/342
2005/0113717	A1	5/2005	Matzinger	600/573
2005/0114062	A1	5/2005	Davies	702/104
2005/0114154	A1	5/2005	Wolkowiez	705/1
2005/0114444	A1	5/2005	Brown	709/203
2005/0118056	A1	6/2005	Swanson	423/23
2005/0118062	A1	6/2005	Otake	422/68.1
2005/0119681	A1	6/2005	Marshall	606/181
2005/0123443	A1	6/2005	Fujiwara	422/58
2005/0123680	A1	6/2005	Kang	427/248.1
2005/0124869	A1	6/2005	Hefti	600/316
2005/0125017	A1	6/2005	Kudrna	606/181
2005/0125018	A1	6/2005	Galloway	606/181
2005/0125019	A1	6/2005	Kudrna	606/182
2005/0126929	A1	6/2005	Mansouri	205/778
2005/0130248	A1	6/2005	Willner	435/14
2005/0130249	A1	6/2005	Parris	435/14
2005/0130292	A1	6/2005	Ahn	435/287.1
2005/0131286	A1	6/2005	Parker	600/328
2005/0131440	A1	6/2005	Starnes	
2005/0131441	A1	6/2005	Iio	606/182
2005/0133368	A1	6/2005	Davies	204/403.01
2005/0136471	A1	6/2005	Bhullar	435/6
2005/0136501	A1	6/2005	Kuriger	435/14
2005/0136529	A1	6/2005	Yang	435/287
2005/0136550	A1	6/2005	Yang	436/514
2005/0137531	A1	6/2005	Prausnitz et al.	604/173
2005/0137536	A1	6/2005	Gonnelli	604/264
2005/0140659	A1	6/2005	Hohl	345/169

(56) **References Cited**

U.S. PATENT DOCUMENTS

2005/0143675	A1	6/2005	Neel	600/583
2005/0143713	A1	6/2005	Delmore	604/506
2005/0143771	A1	6/2005	Stout	606/181
2005/0145490	A1	7/2005	Shinno	204/403
2005/0145491	A1	7/2005	Amano	204/403
2005/0145520	A1	7/2005	Ilo	206/365
2005/0149088	A1	7/2005	Fukuda	606/181
2005/0149089	A1	7/2005	Trissel	606/181
2005/0149090	A1	7/2005	Morita et al.	606/181
2005/0150762	A1	7/2005	Butters	204/403
2005/0150763	A1	7/2005	Butters	204/403
2005/0154277	A1	7/2005	Ting	600/407
2005/0154374	A1	7/2005	Hunter	604/890
2005/0154410	A1	7/2005	Conway	606/181
2005/0154616	A1	7/2005	Iliff	705/3
2005/0158850	A1	7/2005	Kubo	435/287.2
2005/0159656	A1	7/2005	Hockersmith	600/315
2005/0159768	A1	7/2005	Boehm	606/182
2005/0163176	A1	7/2005	You et al.	372/36
2005/0164299	A1	7/2005	Stewart	435/7.1
2005/0164322	A1	7/2005	Heller	435/14
2005/0164329	A1	7/2005	Wallace-Davis	435/25
2005/0165285	A1	7/2005	Iliff	600/300
2005/0165393	A1	7/2005	Eppstein	606/41
2005/0165622	A1	7/2005	Neel	705/2
2005/0169810	A1	8/2005	Hagen	422/102
2005/0169961	A1	8/2005	Hunter	424/423
2005/0170448	A1	8/2005	Burson	435/14
2005/0171567	A1	8/2005	DeHart	606/181
2005/0172021	A1	8/2005	Brown	709/224
2005/0172022	A1	8/2005	Brown	709/224
2005/0173245	A1	8/2005	Feldman	204/403.01
2005/0173246	A1	8/2005	Hodges	204/403.11
2005/0175509	A1	8/2005	Nakaminami	422/82.03
2005/0176084	A1	8/2005	Burkoth	435/14
2005/0176133	A1	8/2005	Miyashita	435/287.1
2005/0176153	A1	8/2005	O'hara	436/70
2005/0177071	A1	8/2005	Nakayama	600/583
2005/0177201	A1	8/2005	Freeman	607/46
2005/0177398	A1	8/2005	Watanabe	705/3
2005/0178218	A1	8/2005	Montagu	73/864.34
2005/0181010	A1	8/2005	Hunter	424/423
2005/0181497	A1	8/2005	Saito	435/287.1
2005/0182307	A1	8/2005	Currie	600/300
2005/0187439	A1	8/2005	Blank	600/310
2005/0187442	A1	8/2005	Cho et al.	
2005/0187444	A1	8/2005	Hubner	600/322
2005/0192488	A1	9/2005	Bryenton	600/301
2005/0196821	A1	9/2005	Monfre	435/14
2005/0197666	A1	9/2005	Raney	606/181
2005/0201897	A1	9/2005	Zimmer	422/82.05
2005/0202567	A1	9/2005	Zanzucchi	436/95
2005/0203358	A1	9/2005	Monfre	600/331
2005/0203364	A1	9/2005	Monfre	600/365
2005/0204939	A1	9/2005	Krejci	101/129
2005/0205136	A1	9/2005	Freeman	137/554
2005/0205422	A1	9/2005	Moser	204/403.06
2005/0205816	A1	9/2005	Hayenga	251/61.1
2005/0209515	A1	9/2005	Hockersmith	600/316
2005/0209564	A1	9/2005	Bonner	604/173
2005/0209625	A1	9/2005	Chan	606/181
2005/0211571	A1	9/2005	Schulein	205/777.5
2005/0211572	A1	9/2005	Buck	205/778
2005/0214881	A1	9/2005	Azarnia	435/7.92
2005/0214892	A1	9/2005	Kovatchev	435/25
2005/0215871	A1	9/2005	Feldman	600/309
2005/0215872	A1	9/2005	Berner	600/347
2005/0215923	A1	9/2005	Wiegel	600/573
2005/0215925	A1	9/2005	Chan	600/583
2005/0216046	A1	9/2005	Yeoh	606/181
2005/0218024	A1	10/2005	Lang	206/438
2005/0221276	A1	10/2005	Rozakis	435/4
2005/0221470	A1	10/2005	Matsumoto	435/287.1
2005/0222599	A1	10/2005	Czernecki	606/182
2005/0227372	A1	10/2005	Khan	436/514
2005/0228242	A1	10/2005	Kawamura	600/300
2005/0228883	A1	10/2005	Brown	709/224
2005/0230252	A1	10/2005	Tsai	204/450
2005/0230253	A1	10/2005	Marquant	204/451
2005/0232813	A1	10/2005	Karmali	422/58
2005/0232815	A1	10/2005	Ruhl	422/66
2005/0234368	A1	10/2005	Wong	600/583
2005/0234486	A1	10/2005	Allen	606/181
2005/0234487	A1	10/2005	Shi	600/181
2005/0234488	A1	10/2005	Allen	606/181
2005/0234489	A1	10/2005	Allen	606/181
2005/0234490	A1	10/2005	Allen	606/181
2005/0234491	A1	10/2005	Allen	606/181
2005/0234492	A1	10/2005	Tsai	606/181
2005/0234494	A1	10/2005	Conway	606/181
2005/0234495	A1	10/2005	Schraga	606/181
2005/0235060	A1	10/2005	Brown	709/224
2005/0239154	A1	10/2005	Feldman	435/14
2005/0239156	A1	10/2005	Drucker	435/14
2005/0239194	A1	10/2005	Takahashi	435/287.2
2005/0240090	A1	10/2005	Ruchti	600/316
2005/0240119	A1	10/2005	Draudt	600/583
2005/0240207	A1	10/2005	Marshall	606/181
2005/0240778	A1	10/2005	Saito	713/186
2005/0245798	A1	11/2005	Yamaguchi	600/345
2005/0245843	A1	11/2005	Day	600/583
2005/0245844	A1	11/2005	Mace	600/583
2005/0245845	A1	11/2005	Roe	600/583
2005/0245846	A1	11/2005	Casey	600/583
2005/0245954	A1	11/2005	Roe	606/181
2005/0245955	A1	11/2005	Schraga	606/181
2005/0256534	A1	11/2005	Alden	606/182
2005/0258035	A1	11/2005	Harding	204/403.01
2005/0258036	A1	11/2005	Harding	204/403.01
2005/0258050	A1	11/2005	Harding	205/775
2005/0265094	A1	12/2005	Harding	365/203
2005/0276133	A1	12/2005	Harding	365/203
2005/0278945	A1	12/2005	Feldman	29/830
2005/0279631	A1	12/2005	Celentano	204/403.01
2005/0279647	A1	12/2005	Beaty	205/792
2005/0283094	A1	12/2005	Thym	600/583
2005/0284110	A1	12/2005	Lang	53/473
2005/0284757	A1	12/2005	Allen	204/400
2005/0287620	A1	12/2005	Heller	435/14
2005/0288637	A1	12/2005	Kuhr	604/204
2005/0288698	A1	12/2005	Matsumoto	606/181
2005/0288699	A1	12/2005	Schraga	606/181
2006/0000549	A1	1/2006	Lang	156/320
2006/0003398	A1	1/2006	Heller	435/14
2006/0004270	A1	1/2006	Bedard	600/316
2006/0004271	A1	1/2006	Peyser	600/362
2006/0004272	A1	1/2006	Shah	600/365
2006/0006574	A1	1/2006	Lang	264/165
2006/0008389	A1	1/2006	Sacherer	422/102
2006/0015129	A1	1/2006	Shahrokni	606/181
2006/0016698	A1	1/2006	Lee	205/777.5
2006/0020228	A1	1/2006	Fowler	600/583
2006/0024774	A1	2/2006	Zocchi	435/14
2006/0025662	A1	2/2006	Buse	600/347
2006/0029979	A1	2/2006	Bai	435/7.1
2006/0029991	A1	2/2006	Hagino	435/14
2006/0030028	A1	2/2006	Nakaminami	435/287.2
2006/0030050	A1	2/2006	Milne	436/67
2006/0030761	A1	2/2006	Raskas	600/316
2006/0030788	A1	2/2006	Wong	600/583
2006/0034728	A1	2/2006	Kloepfer	422/68.1
2006/0037859	A1	2/2006	Hodges	204/400
2006/0040333	A1	2/2006	Zocchi	435/14
2006/0047220	A1	3/2006	Sakata	600/583
2006/0047294	A1	3/2006	Mori	606/181
2006/0052723	A1	3/2006	Roe	600/583
2006/0052724	A1	3/2006	Roe	600/583
2006/0052809	A1	3/2006	Karbowniczek	606/181
2006/0052810	A1	3/2006	Freeman	606/181
2006/0058827	A1	3/2006	Sakata	606/181
2006/0058828	A1	3/2006	Shi	606/181
2006/0062852	A1	3/2006	Holmes	424/484
2006/0063988	A1	3/2006	Schurman	600/316
2006/0064035	A1	3/2006	Wang	600/583

(56) **References Cited**

U.S. PATENT DOCUMENTS

2006/0079739	A1	4/2006	Chen Wang	600/300
2006/0079810	A1	4/2006	Patel	600/583
2006/0079811	A1	4/2006	Roe	600/583
2006/0079920	A1	4/2006	Schraga	606/181
2006/0081469	A1	4/2006	Lee	204/403.02
2006/0085020	A1	4/2006	Freeman	606/181
2006/0085137	A1	4/2006	Bartkowiak	702/19
2006/0086624	A1	4/2006	Tapsak	205/775
2006/0088945	A1	4/2006	Douglas	436/518
2006/0089566	A1	4/2006	DeHart	600/573
2006/0091006	A1	5/2006	Wang	204/403.02
2006/0094944	A1	5/2006	Chuang	600/347
2006/0094947	A1	5/2006	Kovatchev	600/365
2006/0094985	A1	5/2006	Aceti	600/575
2006/0094986	A1	5/2006	Neel	600/583
2006/0095061	A1	5/2006	Trautman	606/185
2006/0096859	A1	5/2006	Lau	204/403.14
2006/0099107	A1	5/2006	Yamamoto	422/57
2006/0099703	A1	5/2006	Choi	435/287.1
2006/0100542	A9	5/2006	Wong	600/583
2006/0100543	A1	5/2006	Raney	600/583
2006/0100654	A1	5/2006	Fukuda	606/181
2006/0100655	A1	5/2006	Leong	606/181
2006/0100656	A1	5/2006	Olsen	606/181
2006/0106373	A1	5/2006	Cahir	606/9
2006/0108236	A1	5/2006	Kasielke	205/792
2006/0113187	A1	6/2006	Deng	204/403.01
2006/0115857	A1	6/2006	Keen	435/7.1
2006/0116562	A1	6/2006	Acosta	600/316
2006/0116704	A1	6/2006	Ashby	606/167
2006/0116705	A1	6/2006	Schraga	606/181
2006/0119362	A1	6/2006	Kermani	324/324
2006/0121547	A1	6/2006	McIntire	435/14
2006/0121625	A1	6/2006	Clemens	436/514
2006/0121759	A1	6/2006	Kasai	439/188
2006/0122099	A1	6/2006	Aoki	514/3
2006/0122536	A1	6/2006	Haar	600/581
2006/0129065	A1	6/2006	Matsumoto	600/583
2006/0129172	A1	6/2006	Crossman	606/181
2006/0129173	A1	6/2006	Wilkinson	606/181
2006/0134713	A1	6/2006	Rylatt	435/7.92
2006/0140457	A1	6/2006	Simshauser	382/124
2006/0144704	A1	7/2006	Ghesquiere	204/403.01
2006/0151323	A1	7/2006	Cho	204/403.04
2006/0151342	A1	7/2006	Yaguchi	206/306
2006/0155215	A1	7/2006	Cha	600/583
2006/0155316	A1	7/2006	Perez	606/181
2006/0155317	A1	7/2006	List	606/181
2006/0156796	A1	7/2006	Burke	73/61.44
2006/0157362	A1	7/2006	Schraga	206/363
2006/0160100	A1	7/2006	Gao	435/6
2006/0161078	A1	7/2006	Schraga	600/583
2006/0161194	A1	7/2006	Freeman	606/185
2006/0163061	A1	7/2006	Hodges	204/401
2006/0166302	A1	7/2006	Clarke	435/25
2006/0167382	A1	7/2006	Deshmukh	600/583
2006/0169599	A1	8/2006	Feldman	205/792
2006/0173254	A1	8/2006	Acosta	600/316
2006/0173255	A1	8/2006	Acosta	600/316
2006/0173379	A1	8/2006	Rasch-Menges	600/583
2006/0173380	A1	8/2006	Hoenes	600/583
2006/0173478	A1	8/2006	Schraga	606/181
2006/0175216	A1	8/2006	Freeman	206/363
2006/0178573	A1	8/2006	Kermani	600/347
2006/0178599	A1	8/2006	Faupel	600/578
2006/0178600	A1	8/2006	Kennedy	600/584
2006/0178686	A1	8/2006	Schraga	606/181
2006/0178687	A1	8/2006	Freeman	606/181
2006/0178688	A1	8/2006	Freeman	606/181
2006/0178689	A1	8/2006	Freeman	606/181
2006/0178690	A1	8/2006	Freeman	606/181
2006/0183871	A1	8/2006	Ward	525/464
2006/0183983	A1	8/2006	Acosta	600/316
2006/0184065	A1	8/2006	Deshmukh	600/583
2006/0184101	A1	8/2006	Srinivasan	604/68
2006/0188395	A1	8/2006	Taniike	422/57
2006/0189895	A1	8/2006	Neel	600/584
2006/0191787	A1	8/2006	Wang	204/400
2006/0195023	A1	8/2006	Acosta	600/316
2006/0195047	A1	8/2006	Freeman	600/583
2006/0195128	A1	8/2006	Alden	606/181
2006/0195129	A1	8/2006	Freeman	606/181
2006/0195130	A1	8/2006	Freeman	606/181
2006/0195131	A1	8/2006	Freeman	606/181
2006/0195132	A1	8/2006	Freeman	606/181
2006/0195133	A1	8/2006	Freeman	606/181
2006/0196031	A1	9/2006	Hoenes	29/432
2006/0196795	A1	9/2006	Windus-Smith	206/438
2006/0200044	A1	9/2006	Freeman	600/583
2006/0200045	A1	9/2006	Roe	600/583
2006/0200046	A1	9/2006	Windus-Smith	600/583
2006/0200181	A1	9/2006	Fukuzawa	606/181
2006/0200981	A1	9/2006	Bhullar	29/847
2006/0200982	A1	9/2006	Bhullar	29/847
2006/0201804	A1	9/2006	Chambers	204/400
2006/0204399	A1	9/2006	Freeman	422/58
2006/0205029	A1	9/2006	Heller	435/25
2006/0205060	A1	9/2006	Kim	435/287.2
2006/0206135	A1	9/2006	Uehata	606/181
2006/0211127	A1	9/2006	Iwaki	436/169
2006/0211927	A1	9/2006	Acosta	600/316
2006/0211931	A1	9/2006	Blank	600/344
2006/0219551	A1	10/2006	Edelbrock	204/403.14
2006/0222566	A1	10/2006	Brauker et al.	422/68.1
2006/0222567	A1	10/2006	Kloepfer	422/68.1
2006/0224171	A1	10/2006	Sakata	606/181
2006/0224172	A1	10/2006	Levaughn	606/181
2006/0229532	A1	10/2006	Wong	600/583
2006/0229533	A1	10/2006	Hoenes	600/584
2006/0229651	A1	10/2006	Marshall	606/181
2006/0229652	A1	10/2006	Lio et al.	606/182
2006/0231396	A1	10/2006	Yamaoka	204/403.14
2006/0231418	A1	10/2006	Harding	205/775
2006/0231421	A1	10/2006	Diamond	205/777.5
2006/0231423	A1	10/2006	Harding	205/792
2006/0231425	A1	10/2006	Harding	205/792
2006/0231442	A1	10/2006	Windus-Smith	206/438
2006/0232278	A1	10/2006	Diamond	324/444
2006/0232528	A1	10/2006	Harding	345/87
2006/0233666	A1	10/2006	Vu	422/68.1
2006/0234263	A1	10/2006	Light, II	C12Q 1/68
2006/0234369	A1	10/2006	Sih	435/287.1
2006/0235284	A1	10/2006	Lee	600/345
2006/0235454	A1	10/2006	LeVaughn	606/181
2006/0241517	A1	10/2006	Fowler	600/583
2006/0241666	A1	10/2006	Briggs	606/181
2006/0241667	A1	10/2006	Freeman	606/181
2006/0241668	A1	10/2006	Schraga	606/181
2006/0241669	A1	10/2006	Stout	606/182
2006/0247154	A1	11/2006	Palmieri	514/8
2006/0247554	A1	11/2006	Roe	600/583
2006/0247555	A1	11/2006	Harttig	600/584
2006/0247670	A1	11/2006	LeVaughn	606/181
2006/0247671	A1	11/2006	Levaughn	606/182
2006/0254932	A1	11/2006	Hodges	205/775
2006/0259057	A1	11/2006	Kim	606/181
2006/0259058	A1	11/2006	Schiff	606/181
2006/0259060	A1	11/2006	Whitson	606/182
2006/0264718	A1	11/2006	Ruchti	600/310
2006/0264996	A1	11/2006	Levaughn	606/181
2006/0264997	A1	11/2006	Colonna	606/181
2006/0266644	A1	11/2006	Pugh	204/400
2006/0266765	A1	11/2006	Pugh	222/1
2006/0271083	A1	11/2006	Boecker	606/181
2006/0271084	A1	11/2006	Schraga	606/182
2006/0276724	A1	12/2006	Freeman	600/583
2006/0277048	A1	12/2006	Kintzig	704/275
2006/0278545	A1	12/2006	Henning	206/363
2006/0279431	A1	12/2006	Bakarania	340/870.02
2006/0281187	A1	12/2006	Emery	436/169
2006/0282109	A1	12/2006	Jansen	606/181
2006/0286620	A1	12/2006	Werner	435/14
2006/0287664	A1	12/2006	Grage	606/181
2006/0293577	A1	12/2006	Morrison	600/365

(56) **References Cited**

U.S. PATENT DOCUMENTS

2007/0004989	A1	1/2007	Dhillon	600/583
2007/0004990	A1	1/2007	Kistner	600/583
2007/0007183	A1	1/2007	Schulat	209/573
2007/0009381	A1	1/2007	Schulat	422/58
2007/0010839	A1	1/2007	Galloway	606/167
2007/0010841	A1	1/2007	Teo	606/181
2007/0015978	A1	1/2007	Kanayama	600/310
2007/0016079	A1	1/2007	Freeman	600/476
2007/0016103	A1	1/2007	Calasso	600/583
2007/0016104	A1	1/2007	Jansen	600/583
2007/0016239	A1	1/2007	Sato	606/181
2007/0017805	A1	1/2007	Hodges	204/400
2007/0027370	A1	2/2007	Brauker	600/309
2007/0027427	A1	2/2007	Trautman	604/46
2007/0032812	A1	2/2007	Loerwald	606/181
2007/0032813	A1	2/2007	Flynn	606/181
2007/0038149	A1	2/2007	Calasso	600/583
2007/0038235	A1	2/2007	Freeman	606/181
2007/0043305	A1	2/2007	Boecker	600/583
2007/0043386	A1	2/2007	Freeman	606/181
2007/0049901	A1	3/2007	Wu	604/506
2007/0049959	A1	3/2007	Feaster	606/181
2007/0055174	A1	3/2007	Freeman	600/583
2007/0055297	A1	3/2007	Fukuzawa	606/181
2007/0055298	A1	3/2007	Uehata	606/181
2007/0060842	A1	3/2007	Alvarez-Icaza	600/583
2007/0060843	A1	3/2007	Alvarez-Icaza	600/583
2007/0060844	A1	3/2007	Alvarez-Icaza	600/583
2007/0060845	A1	3/2007	Perez	600/583
2007/0061393	A1	3/2007	Moore	205/777.5
2007/0062250	A1	3/2007	Krulevitch	73/1.16
2007/0062251	A1	3/2007	Anex	73/1.36
2007/0062315	A1	3/2007	Hodges	73/864.72
2007/0064516	A1	3/2007	Briggs	365/230.05
2007/0066939	A1	3/2007	Krulevitch	604/152
2007/0066940	A1	3/2007	Karunaratne	604/152
2007/0068807	A1	3/2007	Feldman	204/403.01
2007/0073188	A1	3/2007	Freeman	600/583
2007/0073189	A1	3/2007	Freeman	600/583
2007/0074977	A1	4/2007	Guo	205/792
2007/0078358	A1	4/2007	Escutia	600/573
2007/0078360	A1	4/2007	Matsumoto	600/583
2007/0078474	A1	4/2007	Kim	606/181
2007/0080093	A1	4/2007	Boozer	206/569
2007/0083130	A1	4/2007	Thomson	600/583
2007/0083131	A1	4/2007	Escutia	600/583
2007/0083222	A1	4/2007	Schraga	606/181
2007/0083335	A1	4/2007	Moerman	702/19
2007/0084749	A1	4/2007	Demelo	206/569
2007/0088377	A1	4/2007	LeVaughn	606/181
2007/0092923	A1	4/2007	Chang	435/14
2007/0093728	A1	4/2007	Douglas	600/583
2007/0093752	A1	4/2007	Zhao	604/131
2007/0093753	A1	4/2007	Krulevitch	604/131
2007/0093863	A1	4/2007	Pugh	606/181
2007/0093864	A1	4/2007	Pugh	606/181
2007/0095178	A1	5/2007	Schraga	83/13
2007/0100255	A1	5/2007	Boecker	600/583
2007/0100256	A1	5/2007	Sansom	600/583
2007/0100364	A1	5/2007	Sansom	606/181
2007/0102312	A1	5/2007	Cha	206/363
2007/0106178	A1	5/2007	Roe	600/583
2007/0108048	A1	5/2007	Wang	204/403.01
2007/0112281	A1	5/2007	Olson	600/583
2007/0112367	A1	5/2007	Olson	606/181
2007/0118051	A1	5/2007	Korner et al.	600/583
2007/0119710	A1	5/2007	Goldberger	204/403.01
2007/0123801	A1	5/2007	Goldberger	600/583
2007/0123802	A1	5/2007	Freeman	600/583
2007/0123803	A1	5/2007	Fujiwara et al.	600/583
2007/0129618	A1	6/2007	Goldberger	600/345
2007/0129650	A1	6/2007	Freeman	600/583
2007/0131565	A1	6/2007	Fujiwara	205/777.5
2007/0135828	A1	6/2007	Rutynowski	606/181
2007/0142747	A1	6/2007	Boecker	600/583
2007/0142748	A1	6/2007	Freeman	600/583
2007/0142776	A9	6/2007	Kovelman	604/136
2007/0142854	A1	6/2007	Schraga	606/181
2007/0144235	A1	6/2007	Werner	73/1.82
2007/0149875	A1	6/2007	Ouyang	600/347
2007/0149897	A1	6/2007	Ghesquiere	600/583
2007/0161960	A1	7/2007	Chen	604/187
2007/0162064	A1	7/2007	Starnes	606/181
2007/0162065	A1	7/2007	Li	606/182
2007/0167869	A1	7/2007	Roe	600/583
2007/0167870	A1	7/2007	Freeman	600/583
2007/0167871	A1	7/2007	Freeman	600/583
2007/0167872	A1	7/2007	Freeman	600/583
2007/0167873	A1	7/2007	Freeman	600/583
2007/0167874	A1	7/2007	Freeman	600/583
2007/0167875	A1	7/2007	Freeman	600/583
2007/0173739	A1	7/2007	Chan	600/583
2007/0173740	A1	7/2007	Chan	600/583
2007/0173741	A1	7/2007	Boecker	600/583
2007/0173742	A1	7/2007	Freeman et al.	600/583
2007/0173743	A1	7/2007	Freeman	600/583
2007/0173874	A1	7/2007	Uschold	606/181
2007/0173875	A1	7/2007	Uschold	606/181
2007/0173876	A1	7/2007	Aylett	606/181
2007/0176120	A1	8/2007	Schwind	250/492.1
2007/0179356	A1	8/2007	Wessel	600/300
2007/0179404	A1	8/2007	Escutia	600/583
2007/0179405	A1	8/2007	Emery	600/583
2007/0179406	A1	8/2007	DeNuzzio	600/583
2007/0182051	A1	8/2007	Harttig	264/138
2007/0185412	A1	8/2007	Boecker	600/583
2007/0185515	A1	8/2007	Stout	606/181
2007/0185516	A1	8/2007	Schosnig	606/181
2007/0191702	A1	8/2007	Yodfat	600/365
2007/0191737	A1	8/2007	Freeman	600/583
2007/0191738	A1	8/2007	Raney	600/583
2007/0191739	A1	8/2007	Roe	600/583
2007/0193019	A1	8/2007	Feldman	29/592.1
2007/0193882	A1	8/2007	Dai	204/403.02
2007/0196240	A1	8/2007	Boozer	422/102
2007/0196242	A1	8/2007	Boozer	422/102
2007/0203514	A1	8/2007	Flaherty	606/181
2007/0203903	A1	8/2007	Attaran Rezaei	707/5
2007/0205103	A1	9/2007	Hodges	204/403.01
2007/0207498	A1	9/2007	Palmieri	435/7.1
2007/0213601	A1	9/2007	Freeman	600/300
2007/0213637	A1	9/2007	Boozer	600/583
2007/0213682	A1	9/2007	Haar	604/500
2007/0213756	A1	9/2007	Freeman	606/181
2007/0218543	A1	9/2007	Flaherty	435/287.1
2007/0219346	A1	9/2007	Trifiro	530/308
2007/0219432	A1	9/2007	Thompson	600/300
2007/0219436	A1	9/2007	Takase	600/310
2007/0219462	A1	9/2007	Briggs	600/583
2007/0219463	A1	9/2007	Briggs	600/583
2007/0219572	A1	9/2007	Deck	606/181
2007/0219573	A1	9/2007	Freeman	606/183
2007/0219574	A1	9/2007	Freeman	606/185
2007/0225741	A1	9/2007	Ikeda	606/182
2007/0225742	A1	9/2007	Abe	606/182
2007/0227907	A1	10/2007	Shah	205/777.5
2007/0227911	A1	10/2007	Wang	205/792
2007/0227912	A1	10/2007	Chatelier	205/792
2007/0229085	A1	10/2007	Kawai	324/450
2007/0232872	A1	10/2007	Prough	600/316
2007/0232956	A1	10/2007	Harman	600/573
2007/0233013	A1	10/2007	Schoenberg	604/192
2007/0233166	A1	10/2007	Stout	606/182
2007/0233167	A1	10/2007	Weiss	606/182
2007/0233395	A1	10/2007	Neel	702/19
2007/0235329	A1	10/2007	Harding	204/403.01
2007/0235347	A1	10/2007	Chatelier	205/792
2007/0239068	A1	10/2007	Rasch-Menges	600/573
2007/0239188	A1	10/2007	Boozer	606/181
2007/0239189	A1	10/2007	Freeman	606/181
2007/0239190	A1	10/2007	Alden	606/181
2007/0240984	A1	10/2007	Popovich	204/403.01
2007/0240986	A1	10/2007	Reymond	204/412
2007/0244380	A1	10/2007	Say	600/347

(56) **References Cited**

U.S. PATENT DOCUMENTS

2007/0244412	A1	10/2007	Lav	600/584
2007/0244498	A1	10/2007	Steg	606/181
2007/0244499	A1	10/2007	Briggs	606/182
2007/0249921	A1	10/2007	Groll	600/347
2007/0249962	A1	10/2007	Alden	600/583
2007/0249963	A1	10/2007	Alden	600/583
2007/0250099	A1	10/2007	Flora	606/181
2007/0251836	A1	11/2007	Hsu	205/792
2007/0254359	A1	11/2007	Rezania	435/325
2007/0255141	A1	11/2007	Esenaliev	600/475
2007/0255178	A1	11/2007	Alvarez-Icaza	600/583
2007/0255179	A1	11/2007	Alvarez-Icaza	600/583
2007/0255180	A1	11/2007	Alvarez-Icaza	600/583
2007/0255181	A1	11/2007	Alvarez-Icaza	600/583
2007/0255300	A1	11/2007	Vanhiel	606/181
2007/0255301	A1	11/2007	Freeman	606/181
2007/0255302	A1	11/2007	Koeppel	606/182
2007/0260271	A1	11/2007	Freeman	606/181
2007/0260272	A1	11/2007	Weiss	606/181
2007/0264721	A1	11/2007	Buck	436/150
2007/0265511	A1	11/2007	Renouf	600/319
2007/0265532	A1	11/2007	Maynard	600/477
2007/0265654	A1	11/2007	Iio	606/185
2007/0273901	A1	11/2007	Baskeyfield	358/1.9
2007/0273903	A1	11/2007	Baskeyfield	358/1.9
2007/0273904	A1	11/2007	Robinson	358/1.9
2007/0273928	A1	11/2007	Robinson	358/1.9
2007/0276197	A1	11/2007	Harmon	600/300
2007/0276211	A1	11/2007	Mir	600/345
2007/0276290	A1	11/2007	Boecker	600/583
2007/0276425	A1	11/2007	Kim	606/186
2007/0276621	A1	11/2007	Davies	702/104
2007/0278097	A1	12/2007	Bhullar	204/403.01
2007/0282186	A1	12/2007	Gilmore	600/365
2007/0282362	A1	12/2007	Berg	606/181
2007/0288047	A1	12/2007	Thoes	606/182
2007/0293743	A1	12/2007	Monfre	600/316
2007/0293744	A1	12/2007	Monfre	600/316
2007/0293790	A1	12/2007	Bainczyk	600/583
2007/0293882	A1	12/2007	Harttig	606/181
2007/0293883	A1	12/2007	Horie	606/181
2007/0295616	A1	12/2007	Harding	205/777.5
2008/0004651	A1	1/2008	Nicholls	606/182
2008/0007141	A1	1/2008	Deck	310/328
2008/0009767	A1	1/2008	Effenhauser	600/583
2008/0009768	A1	1/2008	Sohrab	600/583
2008/0009892	A1	1/2008	Freeman	606/181
2008/0009893	A1	1/2008	LeVaughn	606/181
2008/0015425	A1	1/2008	Douglas	600/347
2008/0015623	A1	1/2008	Deck	606/181
2008/0017522	A1	1/2008	Heller	205/777.5
2008/0019870	A1	1/2008	Newman	422/68.1
2008/0021291	A1	1/2008	Zocchi	600/300
2008/0021293	A1	1/2008	Schurman	600/316
2008/0021295	A1	1/2008	Wang	600/347
2008/0021296	A1	1/2008	Creaven	600/365
2008/0021346	A1	1/2008	Haar	600/583
2008/0021490	A1	1/2008	Briggs	606/181
2008/0021491	A1	1/2008	Freeman	606/181
2008/0021492	A1	1/2008	Freeman	606/181
2008/0021493	A1	1/2008	Levaughn	606/181
2008/0021494	A1	1/2008	Schmelzeisen-Redeker	606/181
2008/0027385	A1	1/2008	Freeman	604/117
2008/0031778	A1	2/2008	Kramer	422/68.1
2008/0033268	A1	2/2008	Stafford	600/345
2008/0033318	A1	2/2008	Mace	600/583
2008/0033319	A1	2/2008	Kloepfer	600/583
2008/0033468	A1	2/2008	Lathrop	606/181
2008/0033469	A1	2/2008	Winheim	606/181
2008/0034834	A1	2/2008	Schell	73/1.02
2008/0034835	A1	2/2008	Schell	73/1.02
2008/0039885	A1	2/2008	Purcell	606/182
2008/0039886	A1	2/2008	Shi	606/182
2008/0039887	A1	2/2008	Conway	606/182
2008/0040919	A1	2/2008	Griss	29/777
2008/0045825	A1	2/2008	Melker	600/365
2008/0045992	A1	2/2008	Schraga	606/182
2008/0047764	A1	2/2008	Lee	G08C 21/00
2008/0053201	A1	3/2008	Roesicke	73/61.41
2008/0057484	A1	3/2008	Miyata	434/739
2008/0058624	A1	3/2008	Smart	600/345
2008/0058626	A1	3/2008	Miyata	600/365
2008/0058631	A1	3/2008	Draudt	600/385
2008/0058847	A1	3/2008	Abe	606/181
2008/0058848	A1	3/2008	Griffin	606/182
2008/0058849	A1	3/2008	Conway	606/183
2008/0060424	A1	3/2008	Babic	73/61.41
2008/0064986	A1	3/2008	Kraemer	600/583
2008/0064987	A1	3/2008	Escutia	600/583
2008/0065130	A1	3/2008	Patel	606/181
2008/0065131	A1	3/2008	List	606/181
2008/0065132	A1	3/2008	Trissel	606/182
2008/0065133	A1	3/2008	Kennedy	606/182
2008/0065134	A1	3/2008	Conway	606/182
2008/0073224	A1	3/2008	Diamond	205/775
2008/0077048	A1	3/2008	Escutia	600/583
2008/0077167	A1	3/2008	Flynn	606/172
2008/0077168	A1	3/2008	Nicholls	606/182
2008/0081969	A1	4/2008	Feldman	600/322
2008/0081976	A1	4/2008	Hodges	600/345
2008/0082023	A1	4/2008	Deck	600/583
2008/0082116	A1	4/2008	Lathrop	606/181
2008/0082117	A1	4/2008	Ruf	606/182
2008/0086042	A1	4/2008	Brister	600/347
2008/0086044	A1	4/2008	Brister	600/365
2008/0086273	A1	4/2008	Shults	702/19
2008/0093227	A1	4/2008	Diamond	205/775
2008/0093228	A1	4/2008	Diamond	205/782
2008/0093230	A1	4/2008	Diamond	205/792
2008/0094804	A1	4/2008	Reynolds	361/727
2008/0097171	A1	4/2008	Smart	600/309
2008/0097241	A1	4/2008	Maltezos	600/576
2008/0097503	A1	4/2008	Creaven	606/182
2008/0098802	A1	5/2008	Burke	73/61.61
2008/0103396	A1	5/2008	Johnson	600/477
2008/0103415	A1	5/2008	Roe	600/583
2008/0103517	A1	5/2008	Takemoto	606/182
2008/0105024	A1	5/2008	Creaven	73/1.02
2008/0105568	A1	5/2008	Wu	205/780.5
2008/0108130	A1	5/2008	Nakaminami	435/287.1
2008/0108942	A1	5/2008	Brister	604/118
2008/0109024	A1	5/2008	Berkovitch	606/181
2008/0109025	A1	5/2008	Yang	606/182
2008/0109259	A1	5/2008	Thompson	705/3
2008/0114227	A1	5/2008	Haar	600/347
2008/0114228	A1	5/2008	McCluskey	600/365
2008/0118400	A1	5/2008	Neel	422/68.1
2008/0119703	A1	5/2008	Brister	600/347
2008/0119704	A1	5/2008	Brister	600/347
2008/0119706	A1	5/2008	Brister	600/365
2008/0119761	A1	5/2008	Boecker	600/583
2008/0119883	A1	5/2008	Conway	606/181
2008/0119884	A1	5/2008	Flora	606/182
2008/0121533	A1	5/2008	Hodges	205/775
2008/0125800	A1	5/2008	List	606/181
2008/0125801	A1	5/2008	List	606/181
2008/0134806	A1	6/2008	Capriccio	73/863.21
2008/0134810	A1	6/2008	Neel	73/866
2008/0135559	A1	6/2008	Byrd	220/506
2008/0140105	A1	6/2008	Zhong	606/182
2008/0144022	A1	6/2008	Schulat	356/213
2008/0146899	A1	6/2008	Ruchti	600/316
2008/0146966	A1	6/2008	LeVaughn	600/583
2008/0147108	A1	6/2008	Kennedy	606/182
2008/0149268	A1	6/2008	Zhao	156/299
2008/0149599	A1	6/2008	Bohm	216/94
2008/0152507	A1	6/2008	Bohm	417/44.1
2008/0154187	A1	6/2008	Krulevitch	604/48
2008/0154513	A1	6/2008	Kovatchev	702/19
2008/0159913	A1	7/2008	Jung	422/57
2008/0161664	A1	7/2008	Mastrototaro	600/347
2008/0161724	A1	7/2008	Roe	600/583
2008/0161725	A1	7/2008	Wong	600/583
2008/0166269	A1	7/2008	Jansen	422/63

(56) **References Cited**

U.S. PATENT DOCUMENTS

2008/0167578	A1	7/2008	Bryer	600/583
2008/0167673	A1	7/2008	Zhong	606/181
2008/0188771	A1	8/2008	Boecker	600/583
2008/0194987	A1	8/2008	Boecker	600/583
2008/0194989	A1	8/2008	Briggs	600/583
2008/0200782	A1	8/2008	Planman et al.	
2008/0208026	A1	8/2008	Noujaim	600/365
2008/0208079	A1	8/2008	Hein	600/583
2008/0210574	A1	9/2008	Boecker	205/777.5
2008/0214909	A1	9/2008	Fuerst	600/309
2008/0214917	A1	9/2008	Boecker	600/347
2008/0214919	A1	9/2008	Harmon	600/365
2008/0214956	A1	9/2008	Briggs	600/575
2008/0228212	A1	9/2008	List	606/182
2008/0249435	A1	10/2008	Haar	600/583
2008/0249554	A1	10/2008	Freeman	606/181
2008/0255598	A1	10/2008	LeVaughn et al.	606/183
2008/0262387	A1	10/2008	List	600/583
2008/0262388	A1	10/2008	List	600/583
2008/0267822	A1	10/2008	List	422/68.1
2008/0269723	A1	10/2008	Mastrototaro	604/890.1
2008/0269791	A1	10/2008	Hoenes	606/181
2008/0275365	A1	11/2008	Guthrie	600/584
2008/0275384	A1	11/2008	Mastrototaro	604/66
2008/0277291	A1	11/2008	Heller	205/777.5
2008/0277292	A1	11/2008	Heller	205/777.5
2008/0277293	A1	11/2008	Heller	205/777.5
2008/0277294	A1	11/2008	Heller	205/777.5
2008/0286149	A1	11/2008	Roe	422/58
2008/0294068	A1	11/2008	Briggs	600/583
2008/0300614	A1	12/2008	Freeman	606/181
2008/0318193	A1	12/2008	Alvarez-Icaza	434/262
2008/0319284	A1	12/2008	Alvarez-Icaza	600/309
2008/0319291	A1	12/2008	Freeman	600/347
2009/0005664	A1	1/2009	Freeman	600/347
2009/0020438	A1	1/2009	Hodges	205/782
2009/0024009	A1	1/2009	Freeman	600/309
2009/0026075	A1	1/2009	Harding	204/403.14
2009/0026091	A1	1/2009	Harding	205/777.5
2009/0027040	A1	1/2009	Kermani	324/123
2009/0029479	A1	1/2009	Docherty	436/149
2009/0030441	A1	1/2009	Kudrna et al.	600/583
2009/0043177	A1	2/2009	Milledge	600/309
2009/0043183	A1	2/2009	Kermani	600/365
2009/0048536	A1	2/2009	Freeman	600/583
2009/0054813	A1	2/2009	Freeman	600/584
2009/0057146	A1	3/2009	Teodorezyk	204/403.01
2009/0069716	A1	3/2009	Freeman	600/583
2009/0084687	A1	4/2009	Chatelier	205/792
2009/0105572	A1	4/2009	Malecha	600/365
2009/0105573	A1	4/2009	Malecha	600/365
2009/0112123	A1	4/2009	Freeman	600/583
2009/0112155	A1	4/2009	Zhao	604/67
2009/0112180	A1	4/2009	Krulevitch	604/506
2009/0112185	A1	4/2009	Krulevitch	604/523
2009/0112247	A1	4/2009	Freeman et al.	
2009/0119760	A1	5/2009	Hung et al.	
2009/0124932	A1	5/2009	Freeman	606/181
2009/0131829	A1	5/2009	Freeman	600/583
2009/0131830	A1	5/2009	Freeman	600/583
2009/0131964	A1	5/2009	Freeman	606/181
2009/0131965	A1	5/2009	Freeman	606/181
2009/0137930	A1	5/2009	Freeman	600/583
2009/0138032	A1	5/2009	Freeman	606/181
2009/0139300	A1	6/2009	Pugh	73/1.36
2009/0177117	A1	7/2009	Amano et al.	600/583
2009/0184004	A1	7/2009	Chatelier	205/777.5
2009/0187351	A1	7/2009	Orr	702/19
2009/0192410	A1	7/2009	Freeman	600/583
2009/0192411	A1	7/2009	Freeman	600/583
2009/0196580	A1	8/2009	Freeman	386/124
2009/0204025	A1	8/2009	Marsot	600/573
2009/0216100	A1	8/2009	Ebner	600/347
2009/0237262	A1	9/2009	Smith	340/634
2009/0240127	A1	9/2009	Ray	600/365
2009/0247838	A1	10/2009	Cummings	600/309
2009/0247982	A1	10/2009	Krulevitch	604/500
2009/0259146	A1	10/2009	Freeman	600/583
2009/0270765	A1	10/2009	Ghesquiere et al.	600/583
2009/0280551	A1	11/2009	Cardosi	435/190
2009/0281457	A1	11/2009	Faulkner	600/583
2009/0281458	A1	11/2009	Faulkner	600/583
2009/0281459	A1	11/2009	Faulkner	600/583
2009/0301899	A1	12/2009	Hodges	205/777.5
2009/0302872	A1	12/2009	Haggett	324/715
2009/0302873	A1	12/2009	Haggett	324/724
2009/0322630	A1	12/2009	Friman	343/720
2009/0325307	A1	12/2009	Haggett	436/150
2010/0016700	A1	1/2010	Sieh	600/365
2010/0018878	A1	1/2010	Davies	205/782
2010/0030110	A1	2/2010	Choi	600/583
2010/0041084	A1	2/2010	Stephens	435/14
2010/0094170	A1	4/2010	Wilson et al.	
2010/0094324	A1	4/2010	Huang et al.	
2010/0113981	A1	5/2010	Oki et al.	600/587
2010/0145377	A1	6/2010	Lai et al.	
2010/0198107	A1	8/2010	Groll et al.	600/583
2010/0210970	A1	8/2010	Horikawa et al.	
2010/0256525	A1	10/2010	List et al.	600/583
2010/0292611	A1	11/2010	Lum et al.	600/583
2010/0324452	A1	12/2010	Freeman et al.	600/583
2010/0324582	A1	12/2010	Nicholls et al.	
2011/0041449	A1	2/2011	Espinosa	
2011/0077478	A1	3/2011	Freeman et al.	600/309
2011/0077553	A1	3/2011	Alroy	600/573
2011/0098541	A1	4/2011	Freeman et al.	600/309
2012/0149999	A1	6/2012	Freeman et al.	600/309
2012/0184876	A1	7/2012	Freeman et al.	
2012/0232425	A1	9/2012	Freeman et al.	600/583
2012/0271197	A1	10/2012	Castle et al.	600/583
2012/0296233	A9	11/2012	Freemam	600/583

FOREIGN PATENT DOCUMENTS

DE	3538313	A1	4/1986	B08B 5/02
DE	4212315	A1	10/1993	A61B 5/14
DE	4320347		12/1994	C07D 239/82
DE	4344452		6/1995	C07D 471/04
DE	4420232		12/1995	A61B 17/34
DE	4420232	A1	12/1995	
DE	29800611	U	7/1998	A61B 17/32
DE	19819407		11/1999	C01N 33/48
DE	200 09 475		9/2000	
DE	20009475		10/2000	A61B 5/15
DE	29824204		10/2000	G01N 33/48
DE	10053974		12/2000	A61M 1/00
DE	10032042		1/2002	
DE	10057832		2/2002	
DE	10057832	C1	2/2002	A61B 5/14
DE	10142232		3/2003	
DE	10208575	C1	8/2003	A61B 5/145
DE	10208575	C1	8/2003	
DE	10245721		12/2003	A61B 5/15
DE	10245721	A1	12/2003	
DE	10361560	A1	7/2005	
DE	10361560	A1	7/2005	
EP	0112498	A2	7/1984	A47L 1/00
EP	137975	A2	4/1985	A61B 5/14
EP	0160768		11/1985	A61B 5/00
EP	0199484	A2	10/1986	
EP	199484	A2	10/1986	
EP	0254246		1/1988	G01N 21/03
EP	0289 269		11/1988	
EP	0317847	A1	5/1989	A61B 5/14
EP	0320109		6/1989	
EP	359831	A1	3/1990	
EP	0 364 208	A1	4/1990	
EP	364208	A1	4/1990	
EP	0170375		5/1990	
EP	0136362		12/1990	G01N 27/327
EP	406304	A1	1/1991	
EP	0449525		10/1991	A61B 5/14
EP	0453283		10/1991	
EP	0263948		2/1992	

(56) **References Cited**

FOREIGN PATENT DOCUMENTS

EP	0449147	A2	8/1992	A61M 5/32
EP	505475	A1	9/1992	
EP	505494	A1	9/1992	
EP	505504	A1	9/1992	
EP	0530994		3/1993	C07D 239/80
EP	0374355		6/1993	
EP	552223	A1	7/1993	
EP	0351891		9/1993	
EP	0593096		4/1994	G01N 27/327
EP	0630609	A2	12/1994	A61B 5/14
EP	0415388		5/1995	
EP	0654659		5/1995	G01N 3/52
EP	0505494		7/1995	
EP	0662367	A1	7/1995	B24C 1/00
EP	0359831		8/1995	
EP	0471986		10/1995	
EP	0368474		12/1995	
EP	0461601		12/1995	
EP	0429076		1/1996	C12M 1/140
EP	0552223		7/1996	G01N 33/48
EP	0735363		10/1996	
EP	759553	A1	2/1997	
EP	0505504		3/1997	
EP	0777123		6/1997	G01N 33/487
EP	0406304		8/1997	
EP	0537761		8/1997	
EP	0795601		9/1997	
EP	0562370		11/1997	G01N 27/327
EP	0415393		12/1997	
EP	817809	A1	1/1998	
EP	0823239		2/1998	A61N 1/36
EP	0560336		5/1998	
EP	847447	A1	6/1998	
EP	0878 708		11/1998	G01N 27/327
EP	874984	A1	11/1998	
EP	0 898 936	A2	3/1999	
EP	0505475		3/1999	
EP	898936	A2	3/1999	
EP	0901018		3/1999	G01N 33/48
EP	0470649		6/1999	
EP	937249	A1	8/1999	
EP	938493	A1	9/1999	
EP	0 951 939		10/1999	
EP	0 951 939	A2	10/1999	
EP	951939	A2	10/1999	
EP	0847447		11/1999	
EP	0964059		12/1999	
EP	0964060		12/1999	C12Q 1/00
EP	0969097		1/2000	
EP	985376	A1	3/2000	
EP	0 985 376		5/2000	
EP	1021950		7/2000	
EP	0894869		2/2001	
EP	1074832		2/2001	G01N 27/327
EP	1093854		4/2001	
EP	1 101 443		5/2001	
EP	1101443		5/2001	
EP	1114995		7/2001	G01N 33/487
EP	0736607		8/2001	G01N 27/327
EP	1 157 660		11/2001	
EP	0874984		11/2001	
EP	1157660		11/2001	A61B 5/15
EP	0730037		12/2001	
EP	0636879		1/2002	
EP	01174083		1/2002	A61B 5/15
EP	1174083	A2	1/2002	
EP	0851224		3/2002	G01N 27/327
EP	0759553		5/2002	
EP	0856586		5/2002	
EP	0817809		7/2002	C08G 77/26
EP	0872728		7/2002	
EP	0795748		8/2002	G01N 27/327
EP	0685737		9/2002	G01N 27/327
EP	0958495		11/2002	
EP	0937249		12/2002	
EP	1337182		8/2003	
EP	1337182	A1	8/2003	
EP	0880692		1/2004	G01N 27/327
EP	01374770		1/2004	A61B 5/15
EP	1374770	A1	1/2004	
EP	1401233	A2	3/2004	
EP	1404232		4/2004	
EP	1404232	A2	4/2004	
EP	1404233		4/2004	
EP	1246688		5/2004	B01D 71/10
EP	1486766		12/2004	G01N 1/00
EP	1492457	A1	1/2005	
EP	1502614		2/2005	A61M 5/172
EP	1502614	A2	2/2005	
EP	1643908		4/2006	
EP	1643908	A1	4/2006	
EP	1779780	A2	5/2007	
EP	1790288		5/2007	A61B 5/151
EP	1790288	A1	5/2007	
EP	1881322	A1	1/2008	G01N 33/487
EP	1921992		5/2008	
EP	1921992	A1	5/2008	
EP	2039294		3/2009	A61B 5/151
EP	2039294	A1	3/2009	
EP	2119396	A1	11/2009	
EP	2130493	A1	12/2009	A61B 5/15
FR	2 555 432	A	5/1985	
FR	2555432	A1	5/1985	
FR	2622457		11/1987	A61M 5/20
GB	1558111		12/1979	A61B 5/05
GB	2168815		6/1986	
GB	233936	A	6/1999	
GB	2331936	A	6/1999	
GB	2335860	A	10/1999	
GB	2335860	A	10/1999	
GB	2335990	A	10/1999	
GB	2335990	A	10/1999	
JP	HEI 4 1946600		7/1992	G01N 27/28
JP	1996010208		12/1992	
JP	10-104906		1/1998	
JP	1014906		1/1998	A61B 5/14
JP	2000-116768		4/2000	A61M 1/02
JP	04-194660	B2	12/2008	
JP	2009082631	A	4/2009	
WO	WO 80/01389		7/1980	
WO	WO 85/04089		9/1985	
WO	WO 86/07632		12/1985	
WO	WO86/05966		10/1986	A61B 5/00
WO	WO 91/09139		6/1991	
WO	WO92/03099		3/1992	A61B 17/32
WO	WO92/06971		4/1992	C07D 401/06
WO	WO92/07263		4/1992	C12Q 1/00
WO	WO92/07468		5/1992	A01N 43/90
WO	WO93/00044		1/1993	A61B 17/32
WO	WO 93/06979		4/1993	
WO	WO93/09723		5/1993	A61B 17/32
WO	WO 93/25898		12/1993	G01N 27/327
WO	WO 94/27140		11/1994	G01N 27/327
WO	WO 94/29703		12/1994	
WO	WO 94/29704		12/1994	
WO	WO 94/29731		12/1994	
WO	WO 95/00662		1/1995	
WO	WO 95/06240		3/1995	
WO	WO 95/10223		4/1995	
WO	WO95/12583		5/1995	C07D 239/80
WO	WO 95/22597		8/1995	
WO	WO96/14799		5/1996	A61B 17/32
WO	WO 96/30431		10/1996	
WO	WO96/37148		11/1996	A61B 5/15
WO	WO 97/02359		1/1997	G01N 27/327
WO	WO 97/02487		1/1997	
WO	WO 97/11883		4/1997	B65B 1/00
WO	WO 97/11883	A1	4/1997	
WO	WO 97/18464		5/1997	
WO	WO97/28741		8/1997	A61B 5/15
WO	WO 97/30344		8/1997	
WO	WO 97/42882		11/1997	
WO	WO 97/42888		11/1997	A61B 5/00
WO	WO 97/45720		12/1997	

(56) **References Cited**

FOREIGN PATENT DOCUMENTS

WO	WO 98/03431	1/1998	
WO	WO98/14436	4/1998	C07B 59/00
WO	WO 98/19159	5/1998	
WO	WO98/19609	5/1998	A61B 17/32
WO	WO 98/20332	5/1998	
WO	WO 98/20348	5/1998	
WO	WO98/20867	5/1998	A61K 31/00
WO	WO 98/24366	6/1998	
WO	WO 98/24373	6/1998	A61B 17/00
WO	WO 98/35225	8/1998	
WO	WO98/45276	10/1998	C07D 239/80
WO	WO 99/03584	1/1999	
WO	WO 99/05966	2/1999	
WO	WO99/07295	2/1999	
WO	WO 99/07431 A1	2/1999	A61M 25/06
WO	WO 99/13100	3/1999	
WO	WO 99/17854	4/1999	G06F 3/28
WO	WO 99/18532	4/1999	G06F 19/00
WO	WO 99/19507	4/1999	
WO	WO 99/19717	4/1999	
WO	WO 99/27483	6/1999	G06F 19/00
WO	WO 99/27852	6/1999	
WO	WO 99/62576	12/1999	A61M 5/168
WO	WO 99/64580	12/1999	C12N 15/00
WO	WO 00/06024	2/2000	A61B 5/16
WO	WO 00/09184	2/2000	
WO	WO 00/11578	3/2000	G06F 17/40
WO	WO 00/15103	3/2000	A61B 5/00
WO	WO 00/17799	3/2000	G06F 17/60
WO	WO 00/17800	3/2000	G06F 17/60
WO	WO 00/18293	4/2000	A61B 5/00
WO	WO 00/19346	4/2000	G06F 17/60
WO	WO 00/20626	4/2000	C12Q 1/00
WO	WO00/29577	5/2000	C07K 14/705
WO	WO 00/30186	5/2000	H01L 41/09
WO	WO 00/32097	6/2000	A61B 5/00
WO	WO 00/32098	6/2000	A61B 5/00
WO	WO 00/39914	7/2000	
WO	WO 00/42422	7/2000	
WO	WO 00/44084	7/2000	
WO	WO00/46854	8/2000	G02F 1/1333
WO	WO 00/50771	8/2000	
WO	WO00/55915	9/2000	H01L 21/98
WO	WO 00/60340	10/2000	
WO	WO 00/64022	10/2000	
WO	WO 00/67245	11/2000	
WO	WO 00/67268	11/2000	
WO	WO 00/72452	11/2000	G06F 17/60
WO	WO 01/00090	1/2001	
WO	WO 01/15807	3/2001	
WO	WO 01/16578 A1	3/2001	G01N 21/35
WO	WO 01/75433	3/2001	G01N 33/00
WO	WO 01/23885	4/2001	
WO	WO 01/25775	4/2001	G01N 27/30
WO	WO 01/26813	4/2001	
WO	WO01/29037	4/2001	A61K 31/44
WO	WO 01/33216	5/2001	G01N 33/487
WO	WO 01/34029	5/2001	
WO	WO 01/36955	5/2001	G01N 27/327
WO	WO 01/37174	5/2001	G06F 17/60
WO	WO 01/45014 A1	6/2001	G06F 17/60
WO	WO 01/40788	7/2001	G01N 27/327
WO	WO 01/57510	8/2001	G01N 27/30
WO	WO 01/63271	8/2001	G01N 27/327
WO	WO 01/64105	9/2001	
WO	WO 01/66010	9/2001	
WO	WO 01/69505	9/2001	G06F 17/60
WO	WO-0166010 A1	9/2001	
WO	WO 01/72220 A	10/2001	
WO	WO 01/72225	10/2001	
WO	WO 01/73124	10/2001	
WO	WO 01/73395	10/2001	
WO	WO 01/89691	11/2001	
WO	WO 01/91634 A2	12/2001	A61B 5/00
WO	WO 01/95806	12/2001	A61B 5/15
WO	WO 02/00101	1/2002	
WO	WO 02/02796	1/2002	
WO	WO 02/08750	1/2002	
WO	WO 02/08753	1/2002	
WO	WO 02/08950	1/2002	
WO	WO 02/18940	3/2002	
WO	WO 02/21317	3/2002	G06F 17/00
WO	WO 02/25551	3/2002	G06F 17/60
WO	WO 02/32559	4/2002	B01D 71/10
WO	WO 02/41227	5/2002	G06F 17/60
WO	WO 02/41779	5/2002	
WO	WO 02/44948	6/2002	
WO	WO 02/49507	6/2002	A61B 10/00
WO	WO/0249507	6/2002	A61B 10/00
WO	WO 02/056769	7/2002	A61B 5/00
WO	WO 02/059734	8/2002	
WO	WO 02/069791	9/2002	
WO	WO 02/077638	10/2002	
WO	WO 02/100251	12/2002	
WO	WO 02/100252	12/2002	
WO	WO 02/100253	12/2002	
WO	WO 02/100254	12/2002	
WO	WO 02/100460	12/2002	
WO	WO 02/100461	12/2002	
WO	WO 02/101343	12/2002	
WO	WO 02/101359	12/2002	
WO	WO 03/000321	1/2003	
WO	WO 03/023389	3/2003	
WO	WO 03/042691	5/2003	
WO	WO 03039369 A	5/2003	A61B 10/00
WO	WO 03/045557	6/2003	
WO	WO 03/046542	6/2003	
WO	WO 03/049609	6/2003	
WO	WO 03/050534	6/2003	
WO	WO 03/066128	8/2003	
WO	WO 03/070099	8/2003	A61B 5/15
WO	WO 03/071940	9/2003	
WO	WO 03/082091	10/2003	A61B 5/00
WO	WO 03/082091 A2	10/2003	
WO	WO 03/088824	10/2003	A61B 5/15
WO	WO 03/088834	10/2003	A61B 5/00
WO	WO 03/088835	10/2003	A61B 5/15
WO	WO 03/088851 A1	10/2003	A61B 17/14
WO	WO/03088834	10/2003	
WO	WO 03/094752	11/2003	
WO	WO 03/101297	12/2003	A61B 5/15
WO	WO 2004/008130	1/2004	
WO	WO 2004/022133	3/2004	
WO	WO-2004017964 A1	3/2004	
WO	WO 2004/026130	4/2004	
WO	WO 2004/040285 A2	5/2004	
WO	WO 2004/040287 A1	5/2004	
WO	WO 2004/040948	5/2004	
WO	WO 2004/041082	5/2004	
WO	WO 2004/045375	6/2004	A61B 5/15
WO	WO 2004/054455	7/2004	
WO	WO 2004/060174	7/2004	
WO	WO 2004/060446	7/2004	
WO	WO 2004/091693	10/2004	
WO	WO 2004/098405	11/2004	
WO	WO 2004/003147	12/2004	
WO	WO 2004/107964	12/2004	
WO	WO 2004/107975	12/2004	
WO	WO 2004/112602	12/2004	
WO	WO 2004/112612	12/2004	A61B 5/15
WO	WO 2004/112612 A1	12/2004	
WO	WO-2004103147 A2	12/2004	
WO	WO 2005/001418	1/2005	
WO	WO 2005/006939	1/2005	
WO	WO 2005/011774	2/2005	
WO	WO 2005/013824	2/2005	A61B 5/15
WO	WO 2005/016125	2/2005	
WO	WO 2005/018425	3/2005	
WO	WO 2005/018430	3/2005	
WO	WO 2005/018454	3/2005	A61M 5/15
WO	WO 2005/018709	3/2005	
WO	WO 2005/018710	3/2005	
WO	WO 2005/018711	3/2005	A61B 17/32
WO	WO 2005/022143	3/2005	

(56) **References Cited**

FOREIGN PATENT DOCUMENTS

WO	WO 2005/023088	3/2005	
WO	WO 2005/033659	4/2005	
WO	WO 2005/034720	4/2005	
WO	WO 2005/034721	4/2005	
WO	WO 2005/034741	4/2005	A61B 5/00
WO	WO 2005/034778	4/2005	A61M 17/32
WO	WO 2005/035017	4/2005	
WO	WO 2005/035018	4/2005	A61B 17/34
WO	WO 2005/037095	4/2005	
WO	WO 2005/046477	5/2005	
WO	WO 2005045414 A1	5/2005	C12Q 1/00
WO	WO 2005/065399	7/2005	
WO	WO 2005/065414	7/2005	
WO	WO 2005/065415	7/2005	
WO	WO 20065545 A2	7/2005	
WO	WO 2005/072604	8/2005	A61B 5/00
WO	WO2005/084546 A2	9/2005	A61B 5/15
WO	WO 2005/084557	9/2005	A61B 17/14
WO	WO 2005/104948	11/2005	A61B 5/15
WO	WO 2005/104948 A1	11/2005	
WO	WO 2005/114185	12/2005	G01N 21/64
WO	WO 2005/116622	12/2005	
WO	WO 2005/119234	12/2005	
WO	WO 2005/120197	12/2005	A61B 17/14
WO	WO 2005/120199	12/2005	A61B 5/00
WO	WO 2005/120365	12/2005	A61B 17/32
WO	WO 2005/120365 A1	12/2005	
WO	WO 2005/121759	12/2005	
WO	WO 2006/001797	1/2006	A61B 17/14
WO	WO 2006/001973	1/2006	A61B 5/15
WO	WO-2006005545 A1	1/2006	
WO	WO 2006/011062	2/2006	
WO	WO 2006/013045	2/2006	A61B 5/15
WO	WO 2006/015615	2/2006	C12Q 1/00
WO	WO 2006/027702 A2	3/2006	
WO	WO 2006/031920	3/2006	A61B 5/00
WO	WO 2006/032391	3/2006	A61B 5/15
WO	WO-2006037646 A2	4/2006	
WO	WO 00/33236	6/2006	G06F 159/00
WO	WO 2006/072004	7/2006	
WO	WO 2006/105146	10/2006	A61B 5/05
WO	WO 2006/116441	11/2006	A61B 5/151
WO	WO 2007/010087 A2	1/2007	A61B 5/151
WO	WO 2007/025635	3/2007	A61B 5/15
WO	WO 2007/044834	4/2007	A61B 5/00
WO	WO 2007/054335	5/2007	A61B 5/15
WO	WO 2007/070719	6/2007	A61B 5/00
WO	WO 2007/084367	7/2007	A61B 5/00
WO	WO 2007/088905 A1	8/2007	A61B 5/1473
WO	WO 2007/106470	9/2007	G01N 1/00
WO	WO 2007/119900	10/2007	A61B 5/157
WO	WO 2008/085052 A2	7/2008	A61B 5/15
WO	WO 2008/112268	9/2008	A61B 17/32
WO	WO 2008/112279	9/2008	A61B 5/155
WO	WO-2008112268 A2	9/2008	
WO	WO-2008112279 A1	9/2008	
WO	WO 2010109461 A1	9/2010	A61B 5/151

OTHER PUBLICATIONS

Wolfbeis et al. (Sol-gel based glucose biosensors employing optical oxygen transducers, and a method for compensating for variable oxygen background, Biosensors & Bioelectronics 15 (2000) pp. 69-76).

Machine translation of DE 10053974 pp. 1-4, provided by epo.org.

G. Jarzabek, Z. Borkowska, On the Real Surface Area of Smooth Solid Electrodes, 1997, Electrochimica Acta, vol. 42, No. 19, pp. 2915-2918.

* cited by examiner

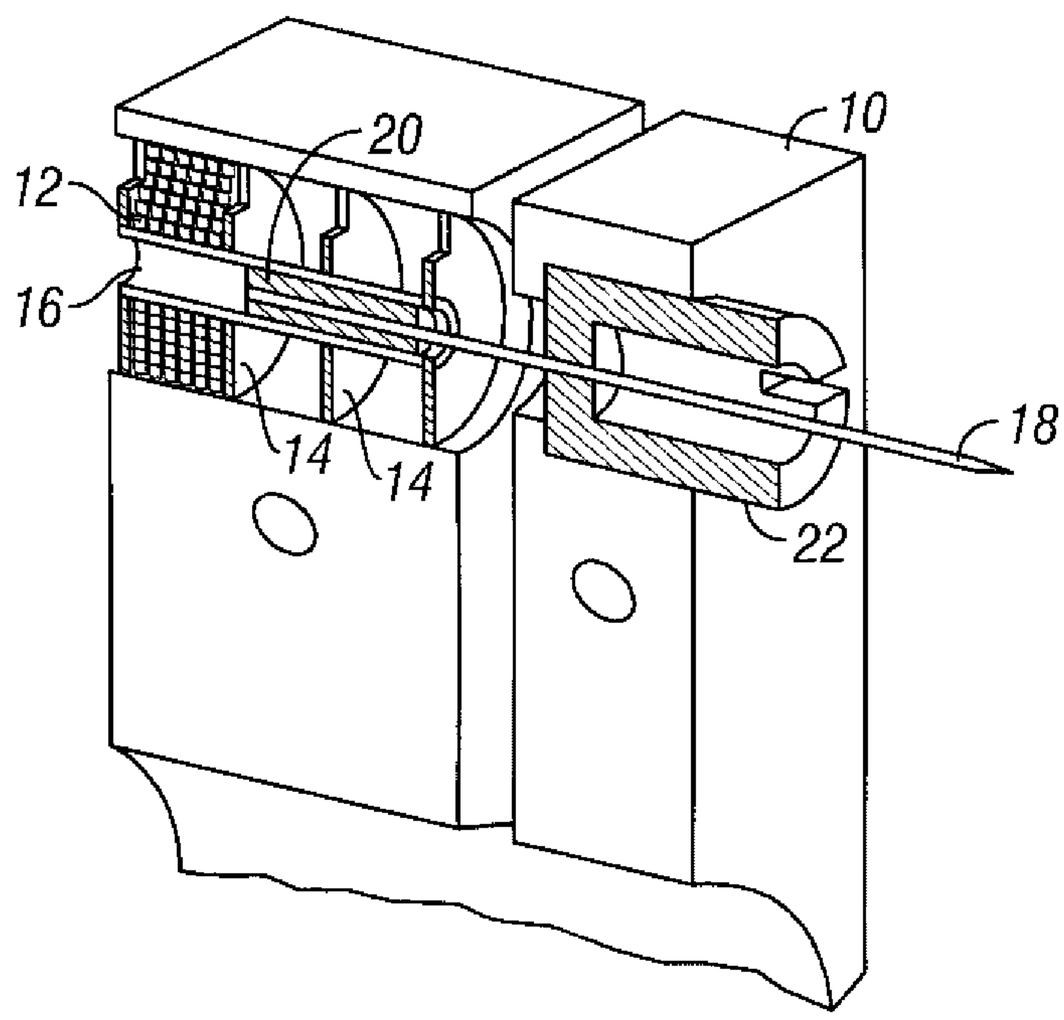

FIG. 1

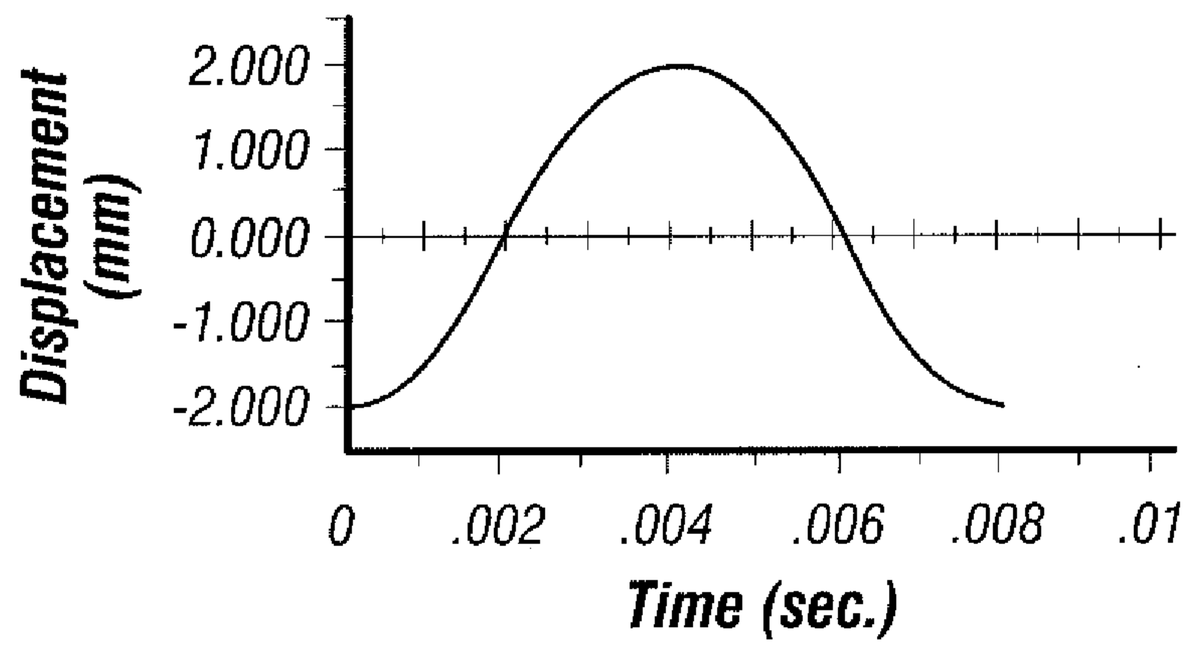
Displacement (mm)
2.000
1.000
0.000
-1.000
-2.000
0
.002
.004
.006
.008
.01
Time (sec.)

FIG. 2A

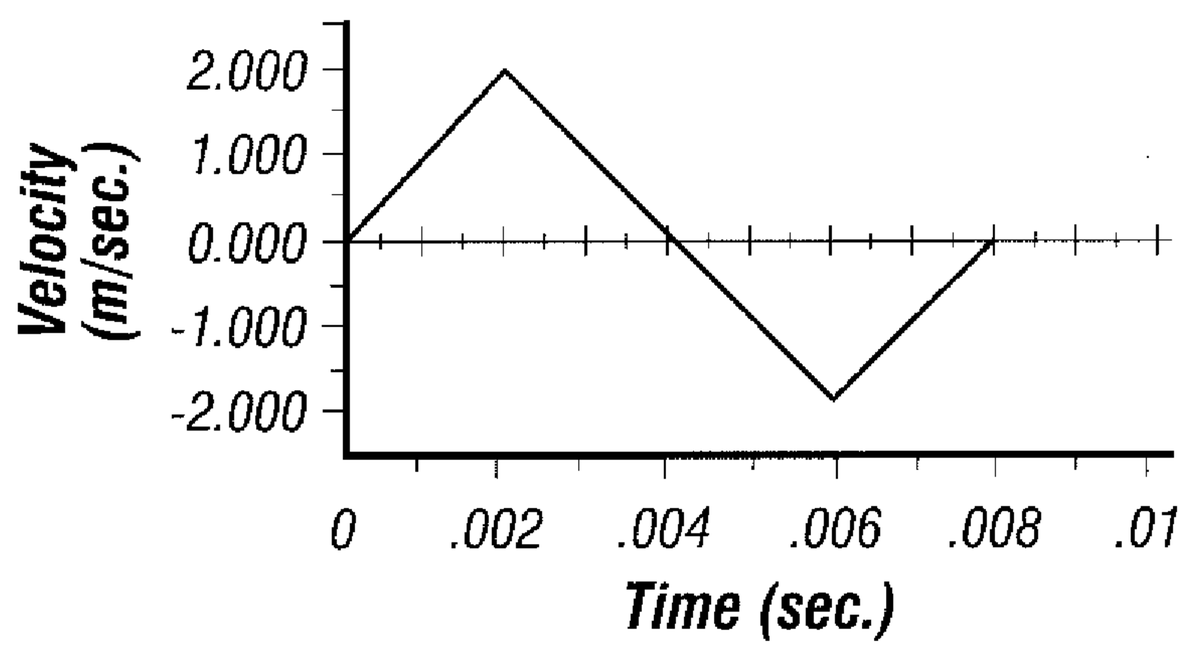
Velocity (m/sec.)
2.000
1.000
0.000
-1.000
-2.000
0
.002
.004
.006
.008
.01
Time (sec.)

FIG. 2B

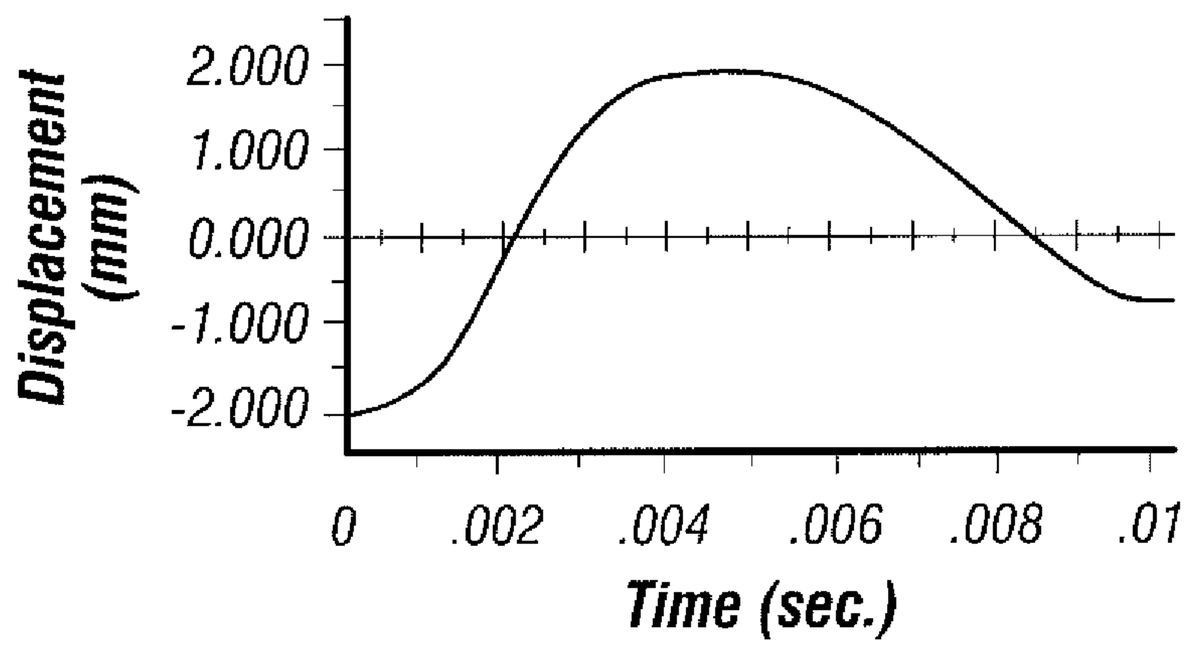
Displacement (mm)
2.000
1.000
0.000
-1.000
-2.000
0
.002
.004
.006
.008
.01
Time (sec.)

FIG. 2C

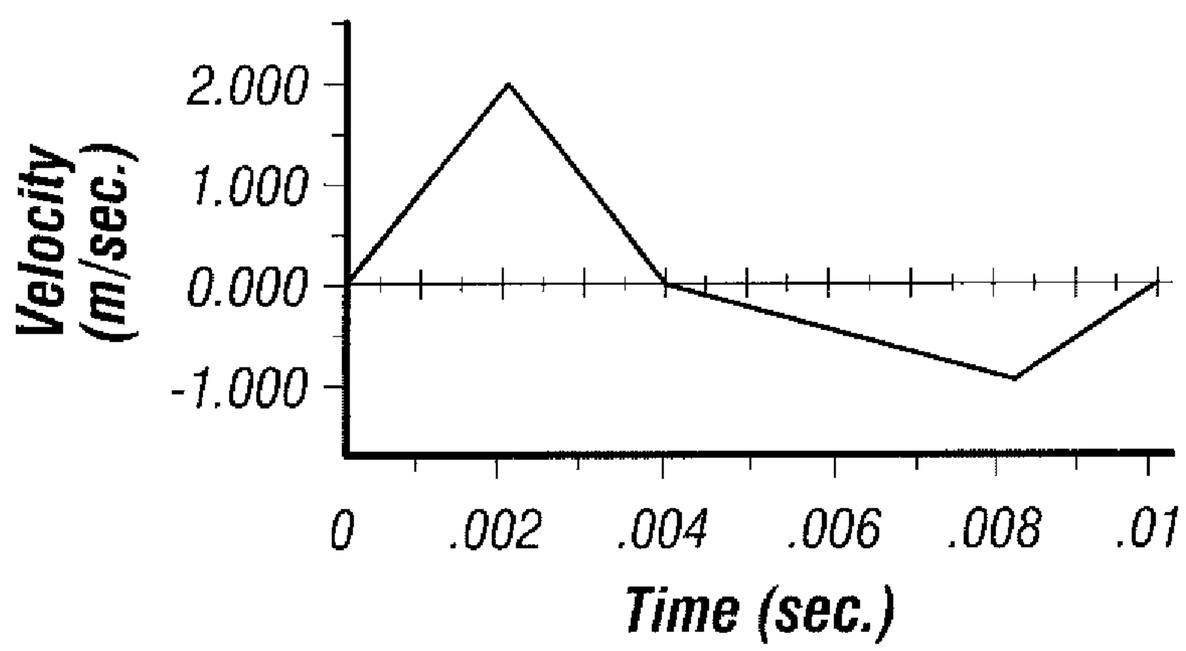
Velocity (m/sec.)
2.000
1.000
0.000
-1.000
0
.002
.004
.006
.008
.01
Time (sec.)

FIG. 2D

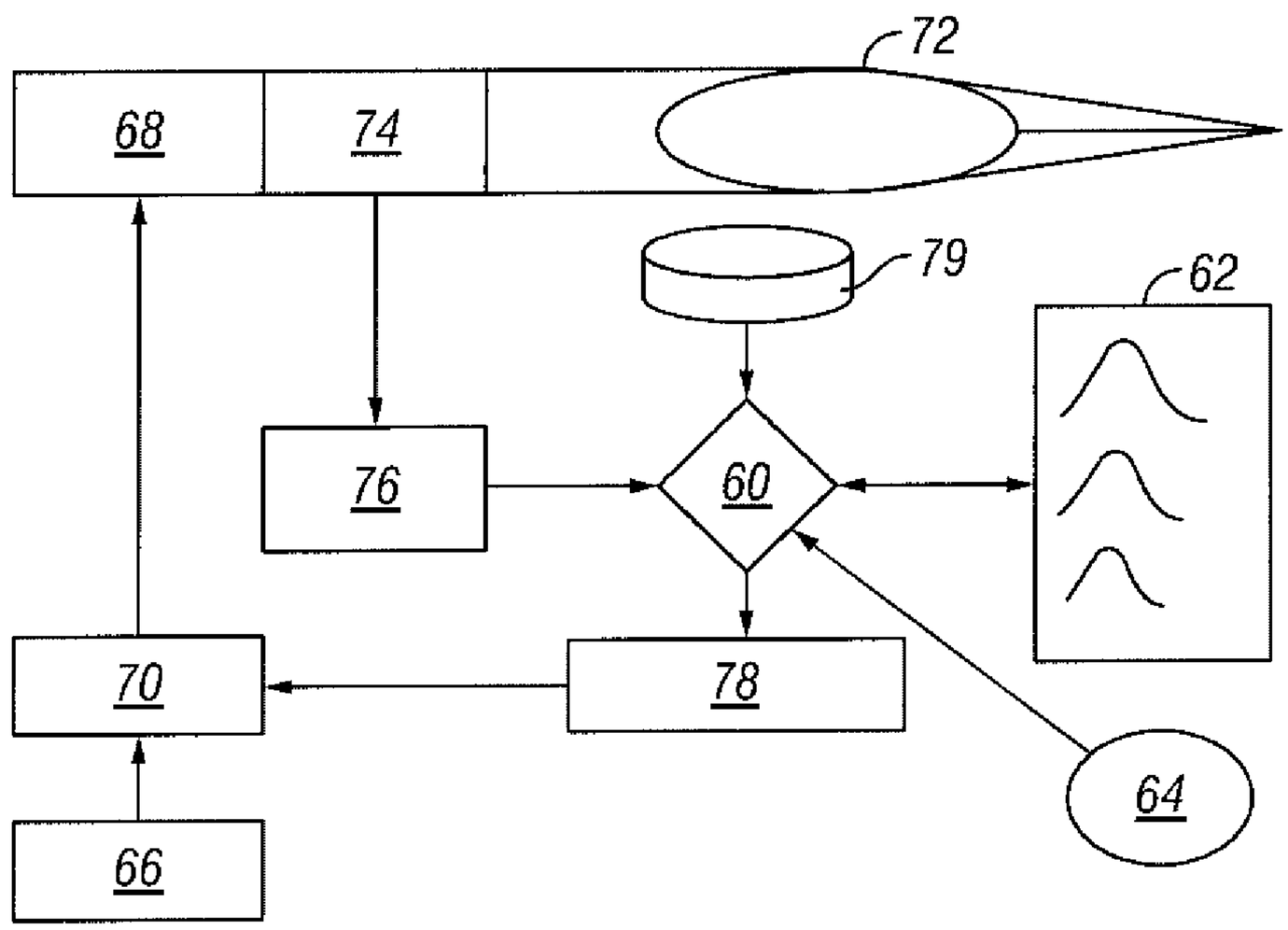

FIG. 3

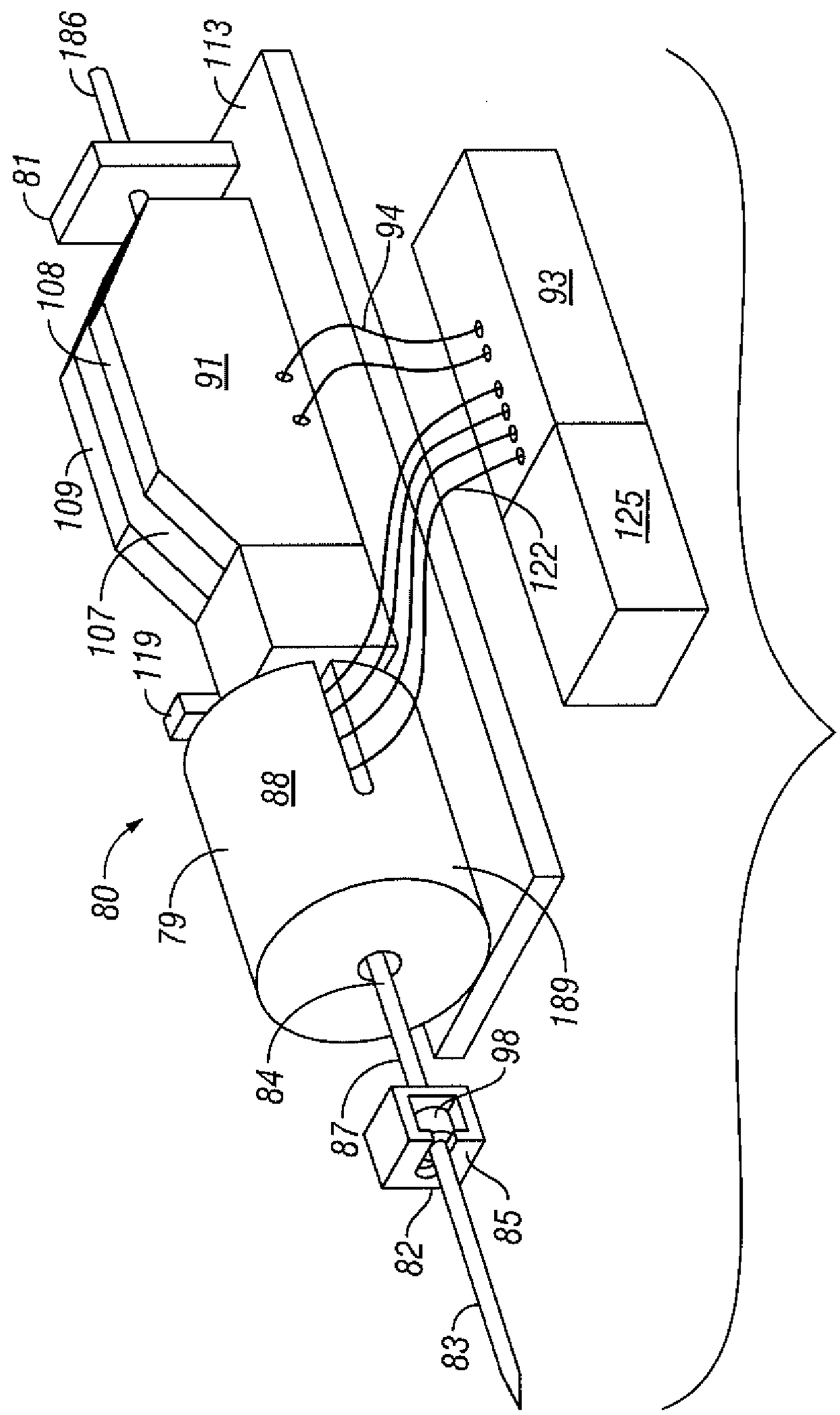
186
113
81
108
91
94
93
109
107
119
122
125
88
80
79
189
84
98
87
82
85
83

FIG. 4

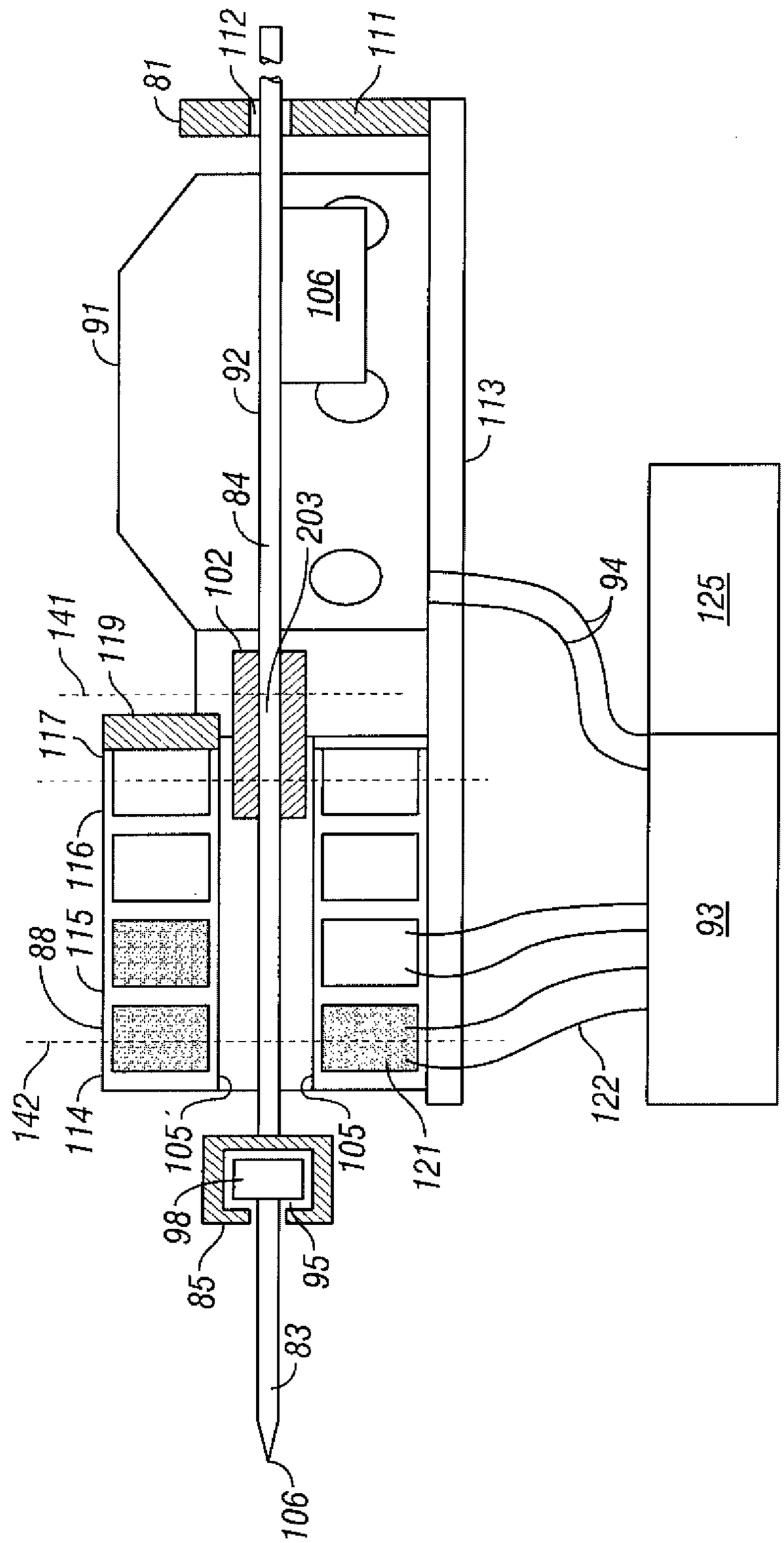
81
112
111
91
92
106
113
84
203
102
94
125
141
119
117
116
115
88
93
142
114
105
105
121
122
98
85
95
83
106

FIG. 5

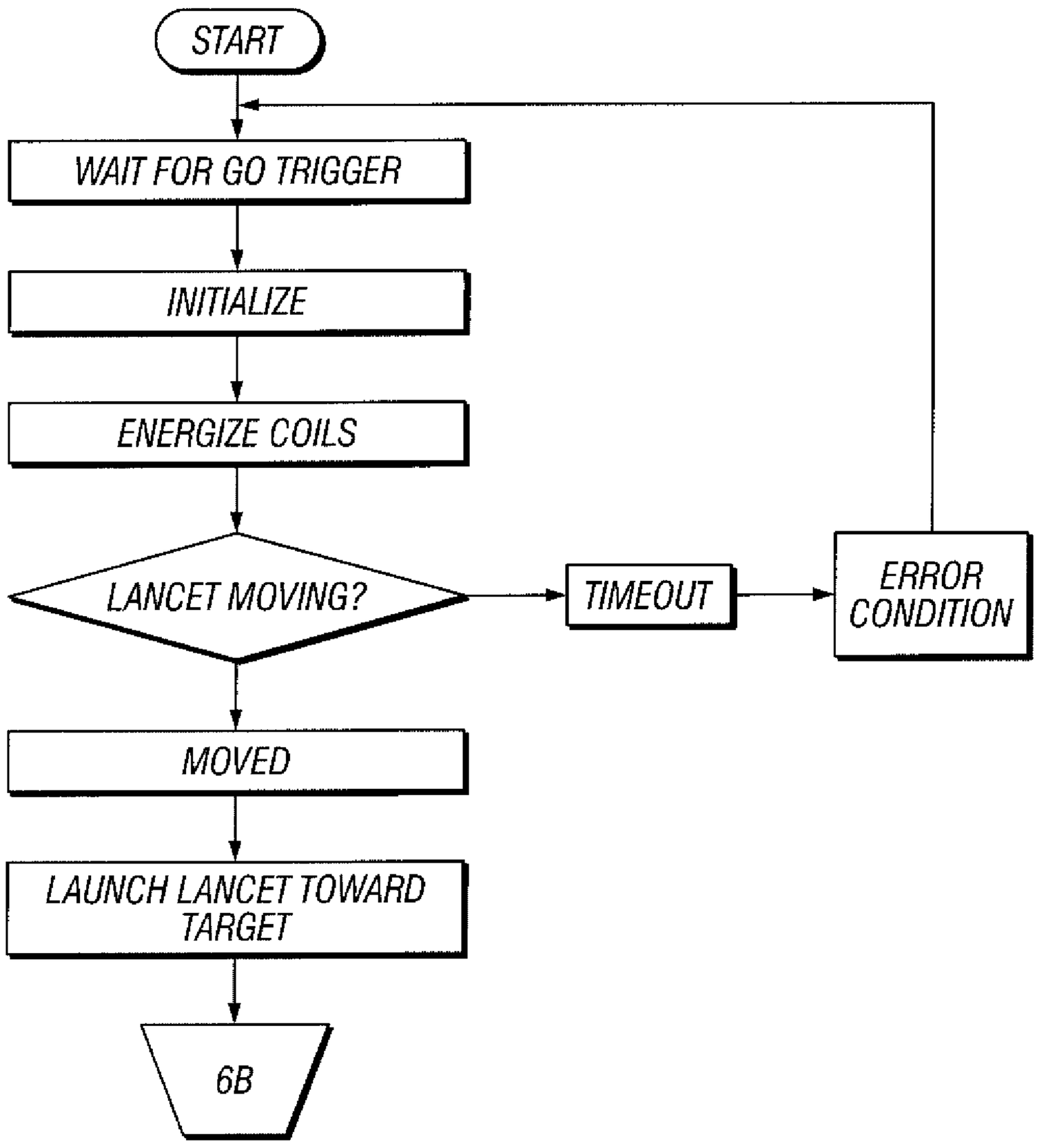
START
WAIT FOR GO TRIGGER
INITIALIZE
ENERGIZE COILS
LANCET MOVING?
TIMEOUT
ERROR CONDITION
MOVED
LAUNCH LANCET TOWARD TARGET
6B

FIG. 6A

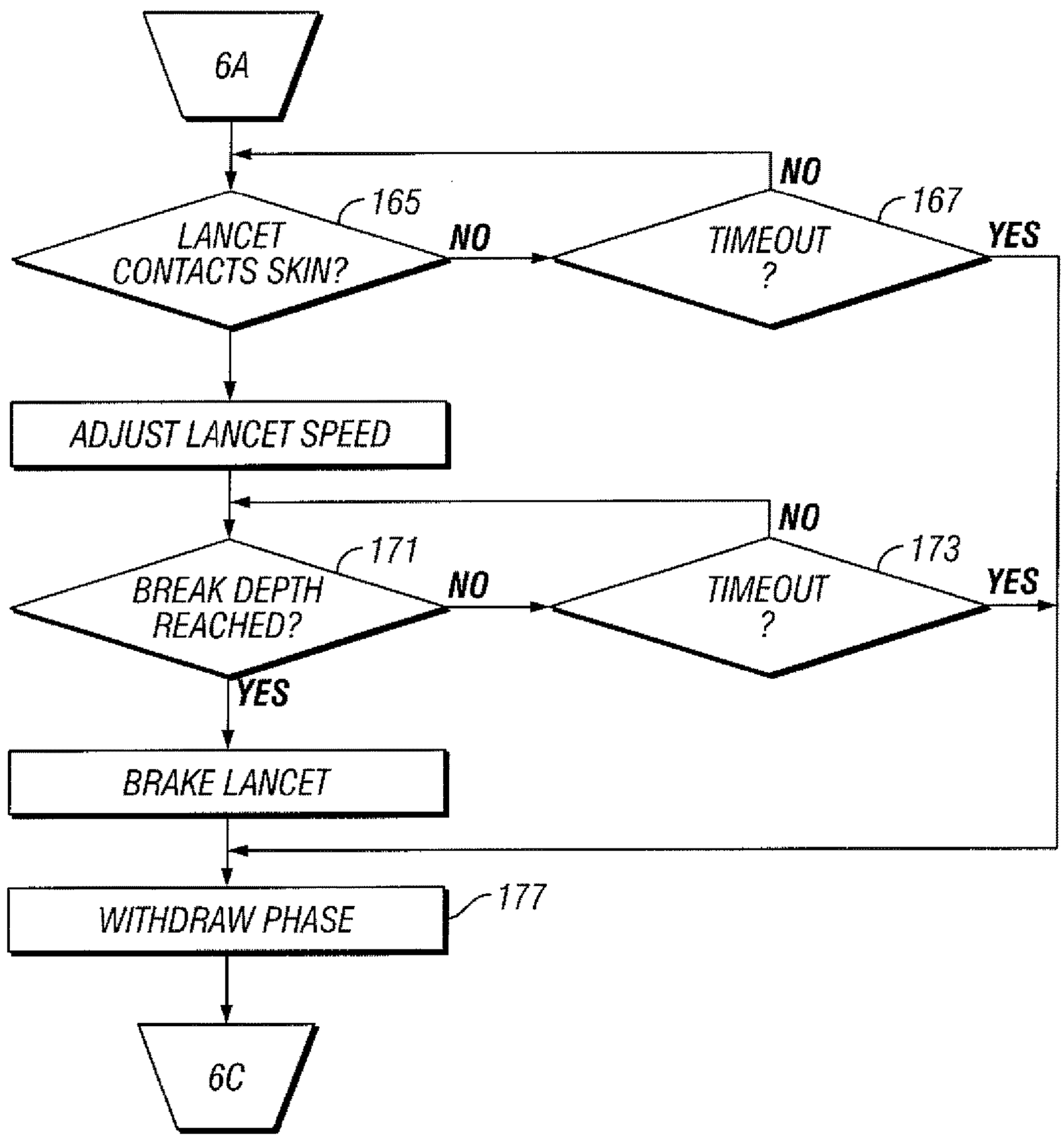
6A
LANCET CONTACTS SKIN?
165
NO
TIMEOUT ?
167
NO
YES
ADJUST LANCET SPEED
BREAK DEPTH REACHED?
171
NO
TIMEOUT ?
173
NO
YES
YES
BRAKE LANCET
WITHDRAW PHASE
177
6C

FIG. 6B

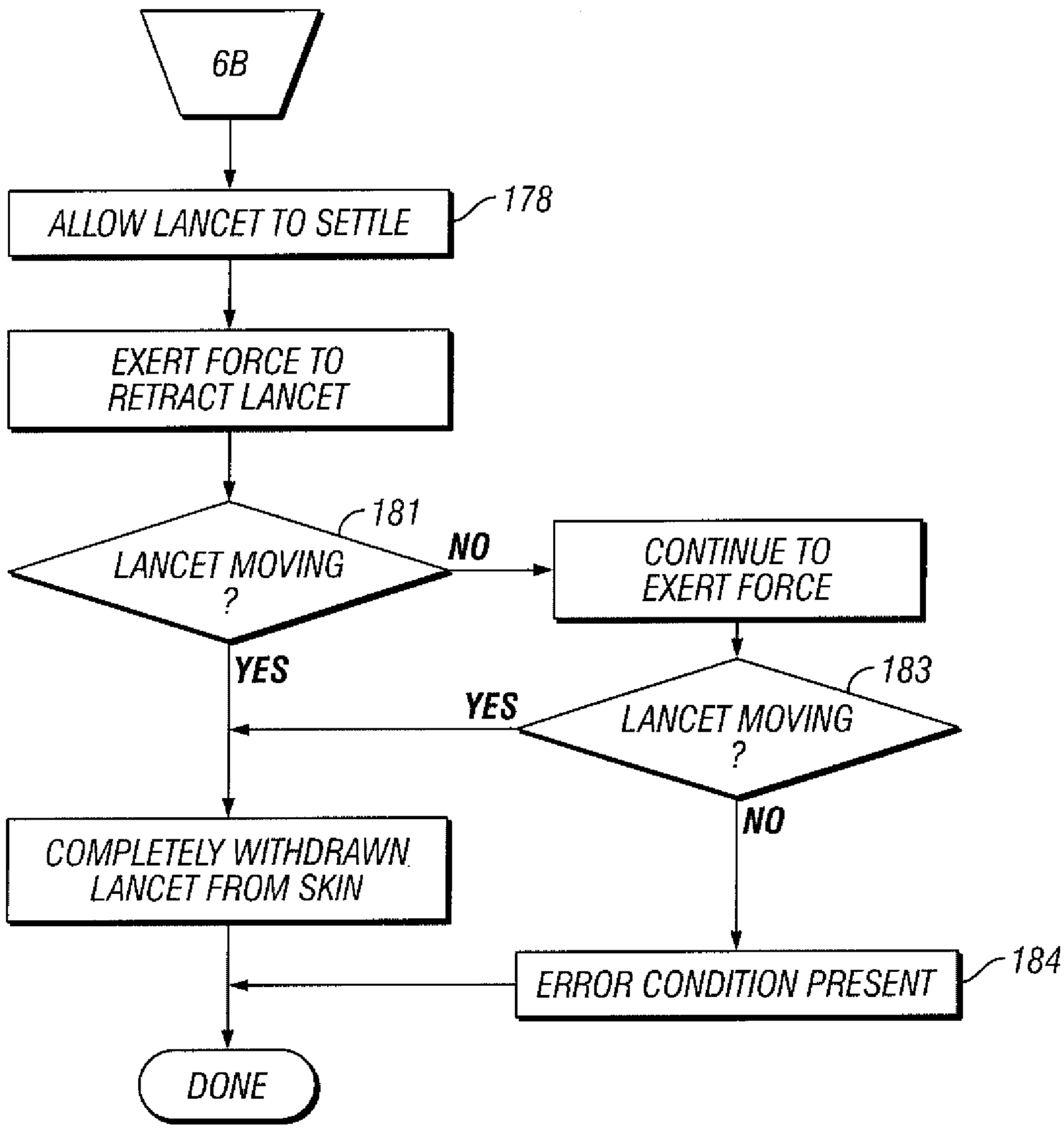
6B
ALLOW LANCET TO SETTLE
178
EXERT FORCE TO RETRACT LANCET
LANCET MOVING ?
181
NO
CONTINUE TO EXERT FORCE
YES
YES
LANCET MOVING ?
183
NO
COMPLETELY WITHDRAWN LANCET FROM SKIN
ERROR CONDITION PRESENT
184
DONE

FIG. 6C

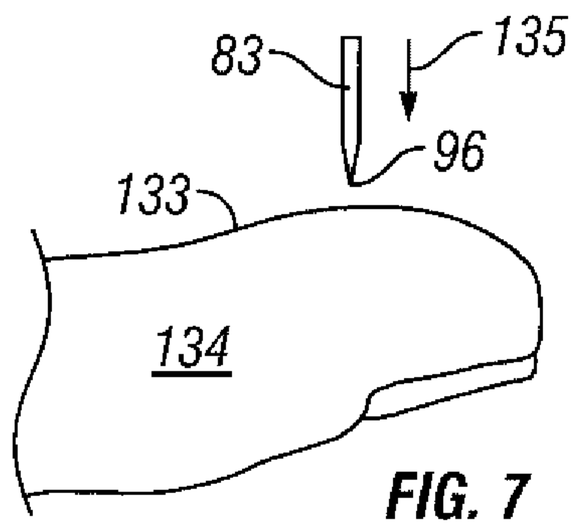

FIG. 7

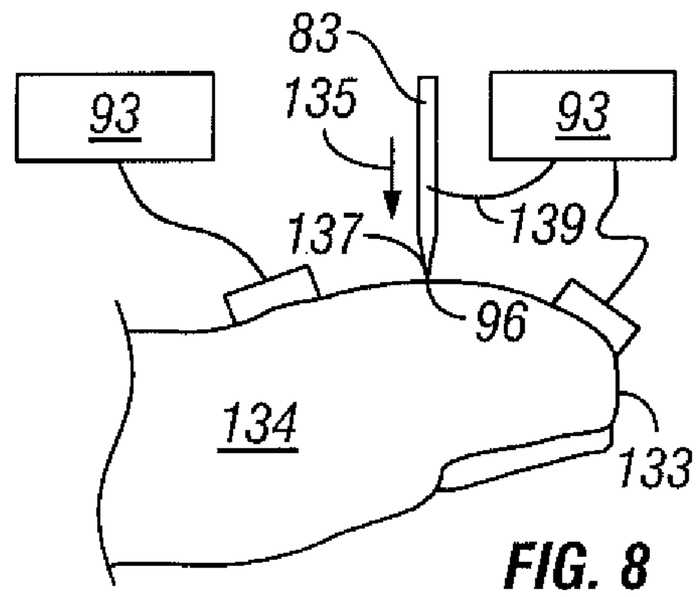

FIG. 8

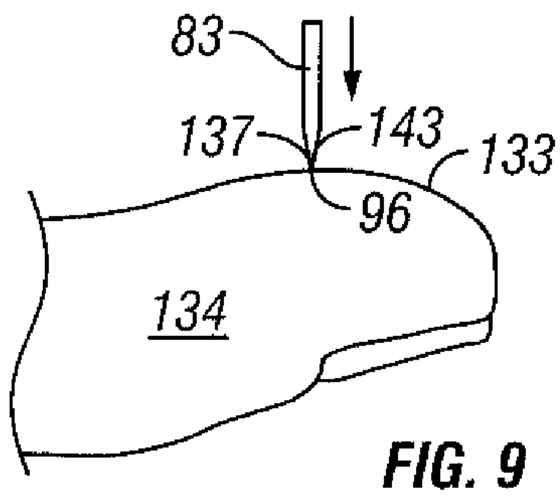

FIG. 9

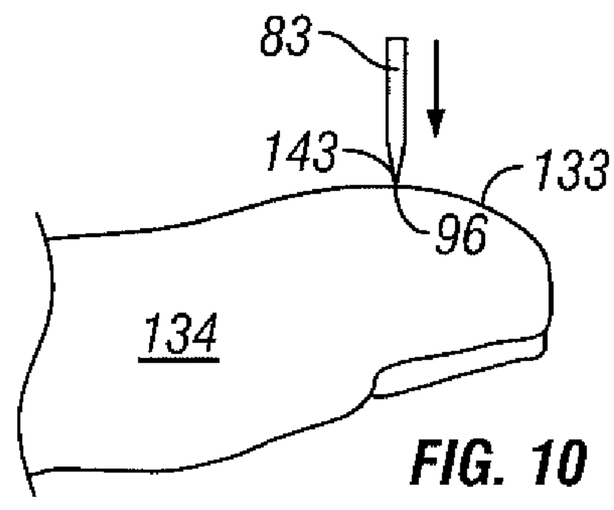

FIG. 10

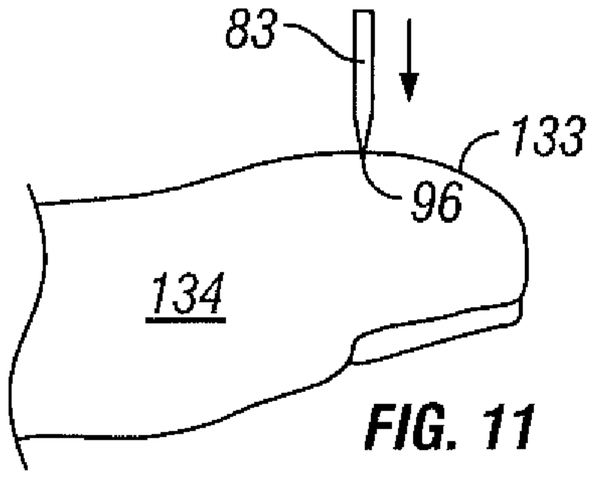

FIG. 11

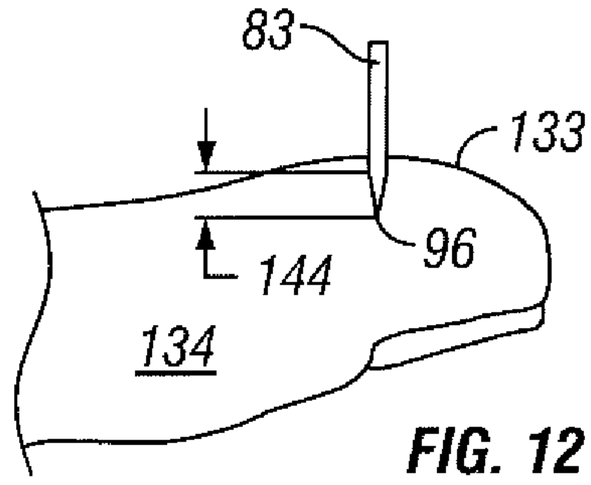

FIG. 12

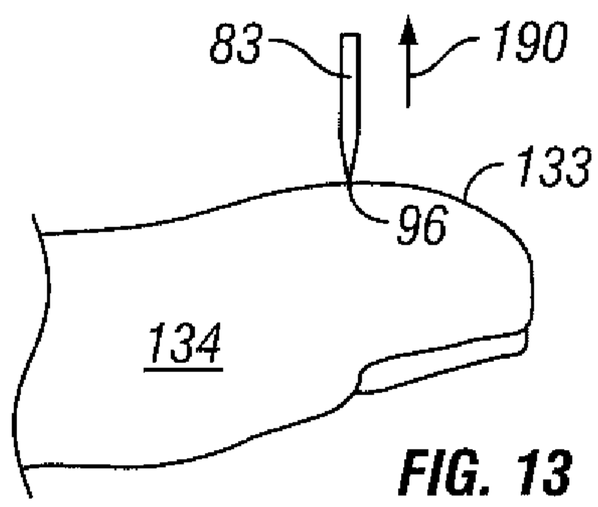

FIG. 13

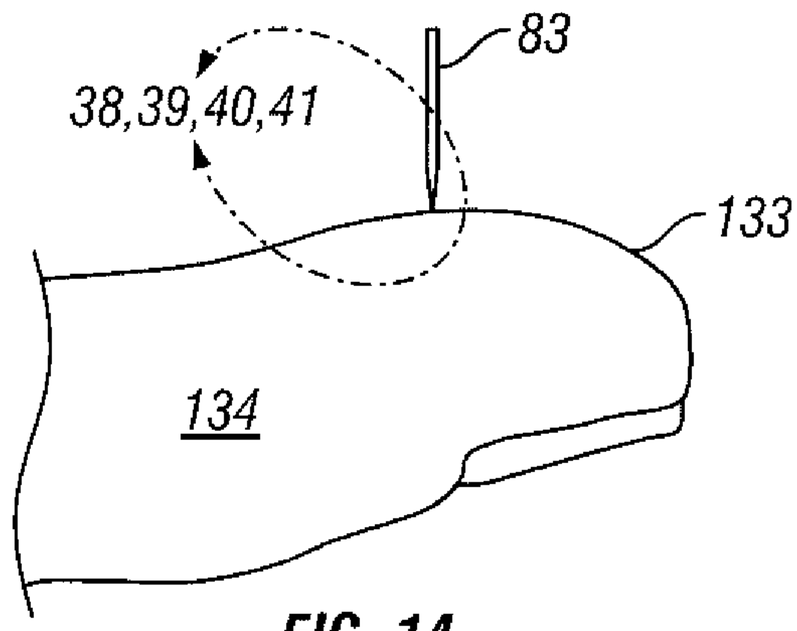

FIG. 14

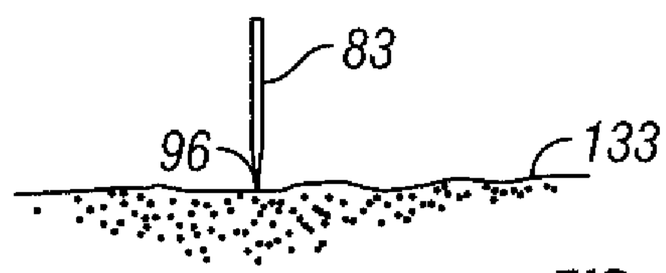

FIG. 15

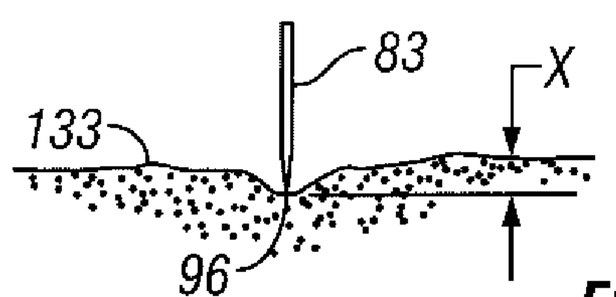

FIG. 16

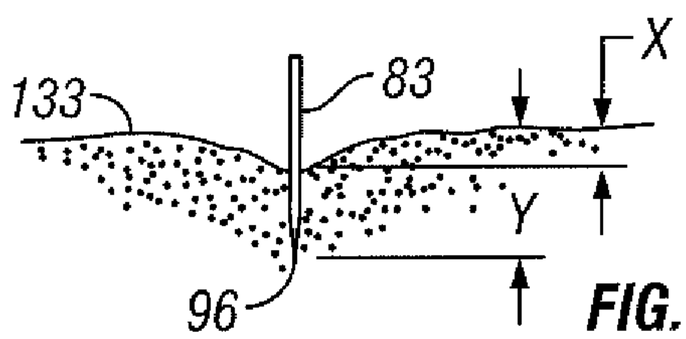

FIG. 17

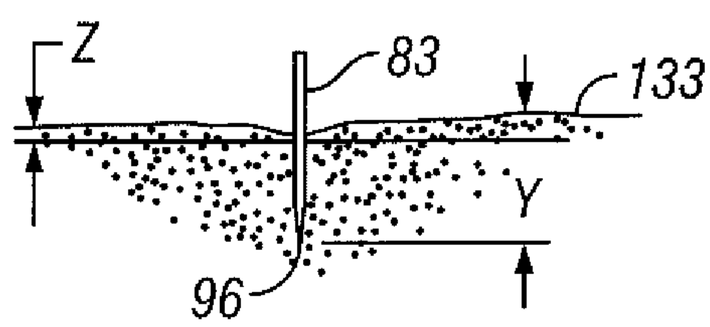

FIG. 18

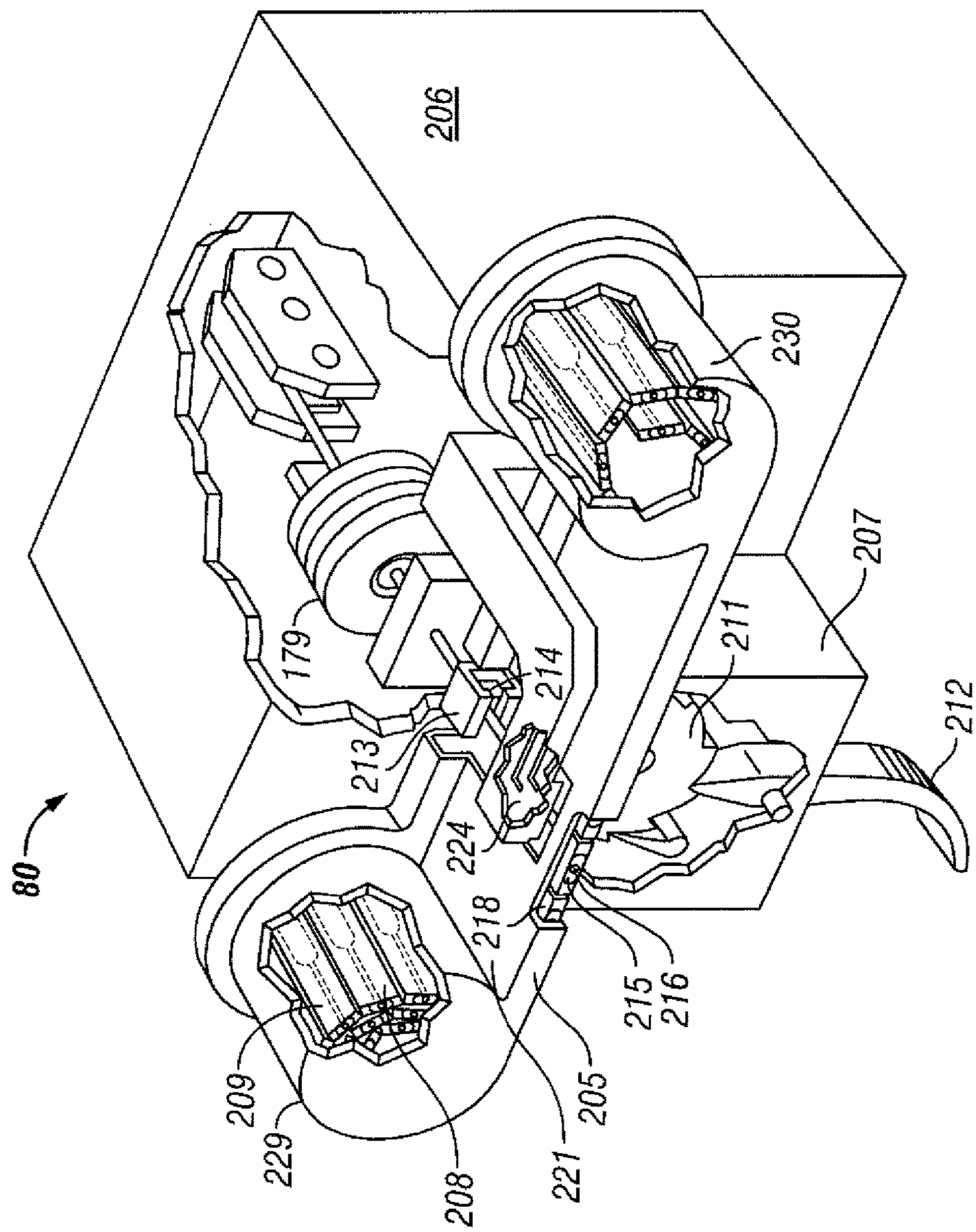
80
206
230
207
211
212
179
214
213
224
218
215
216
209
229
208
221
205

FIG. 19

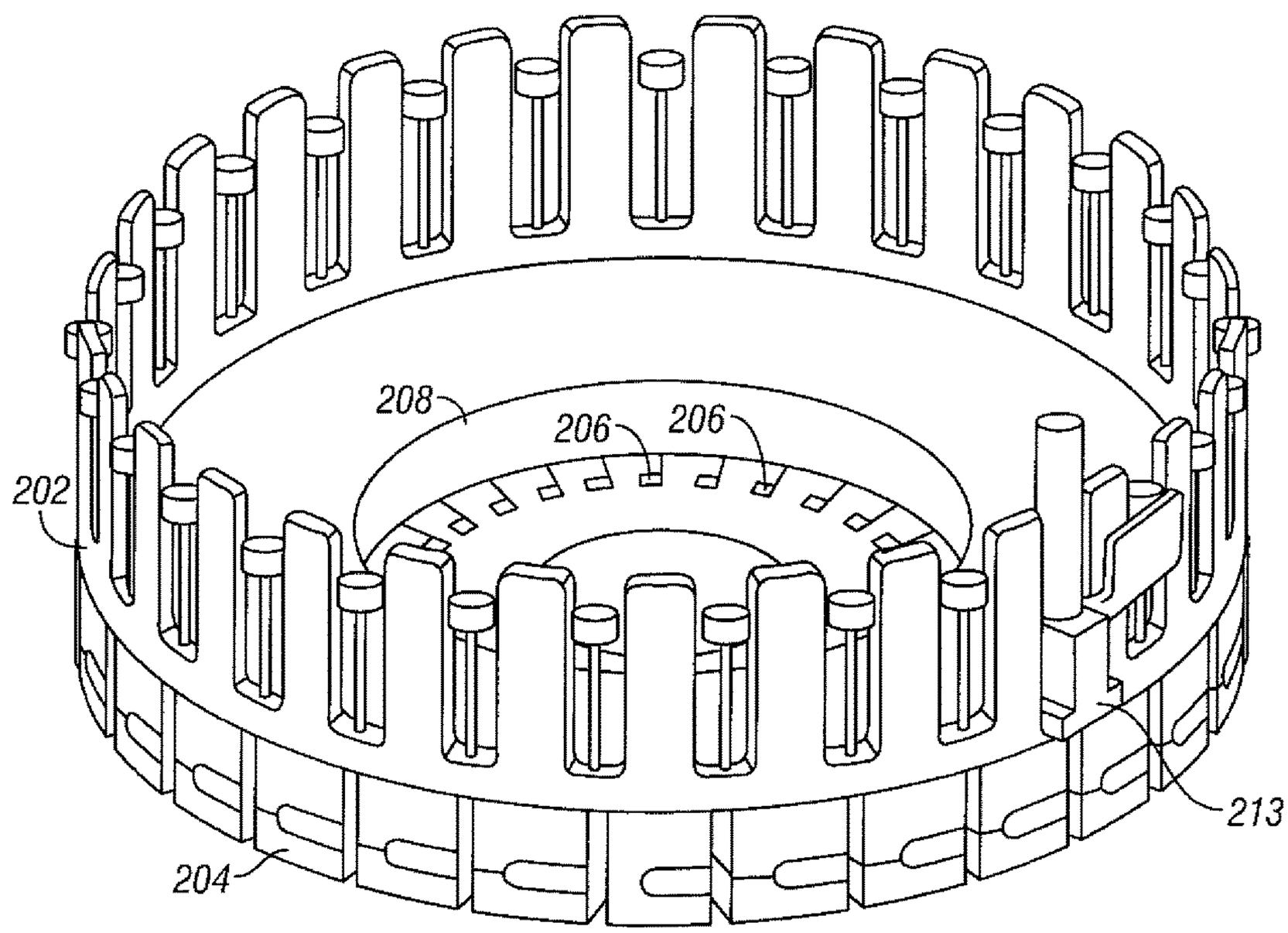

FIG. 20

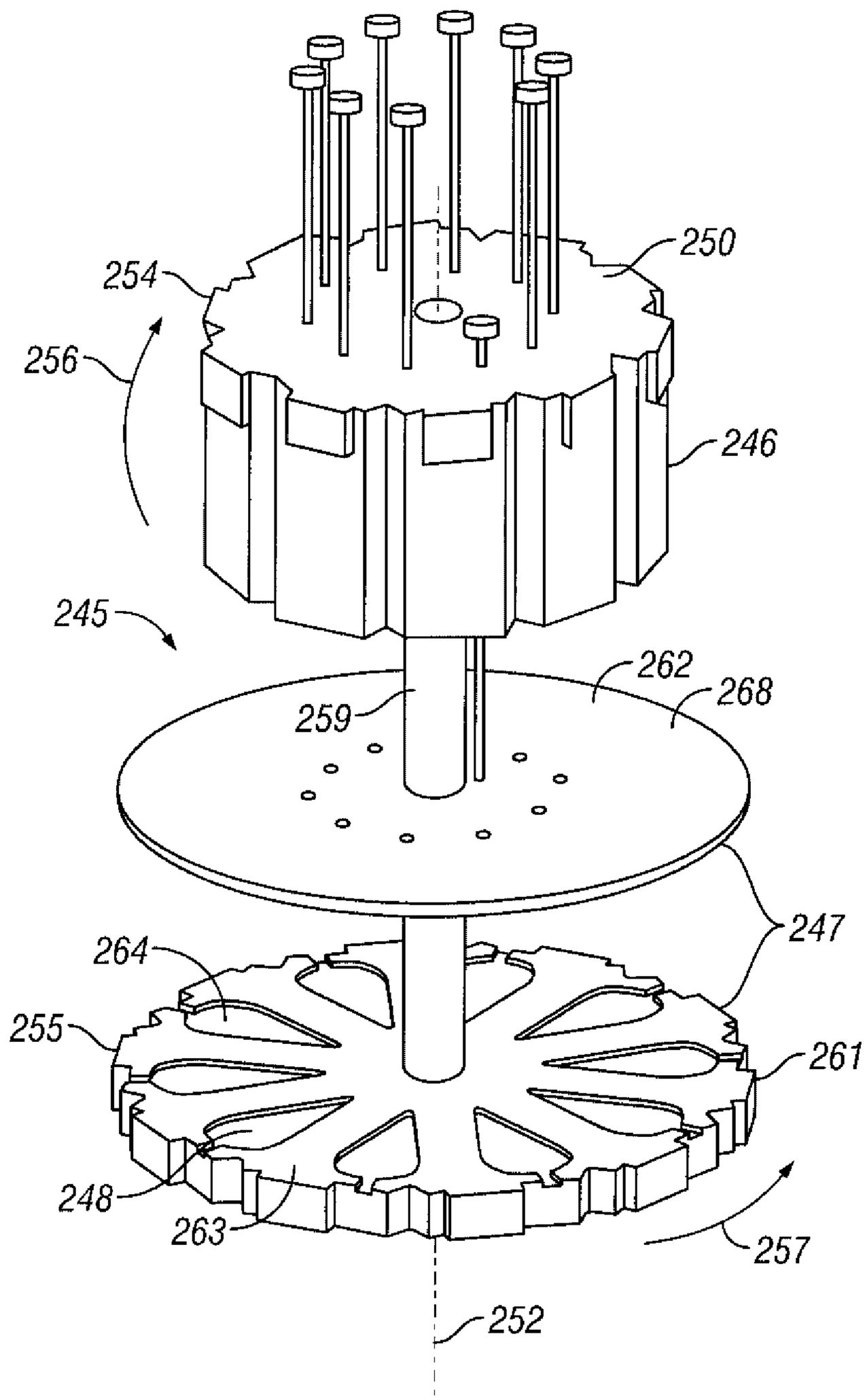

FIG. 21

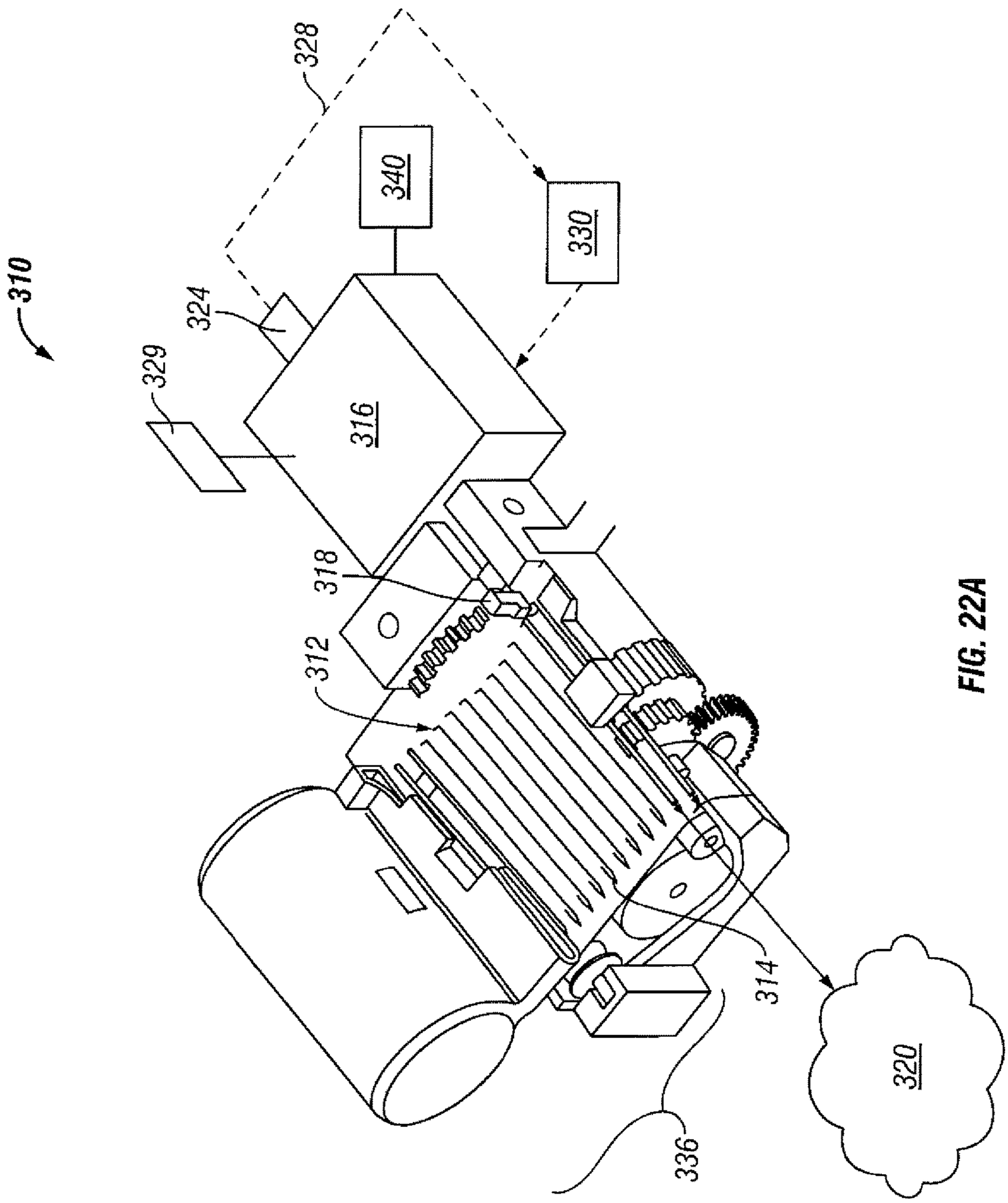

FIG. 22A

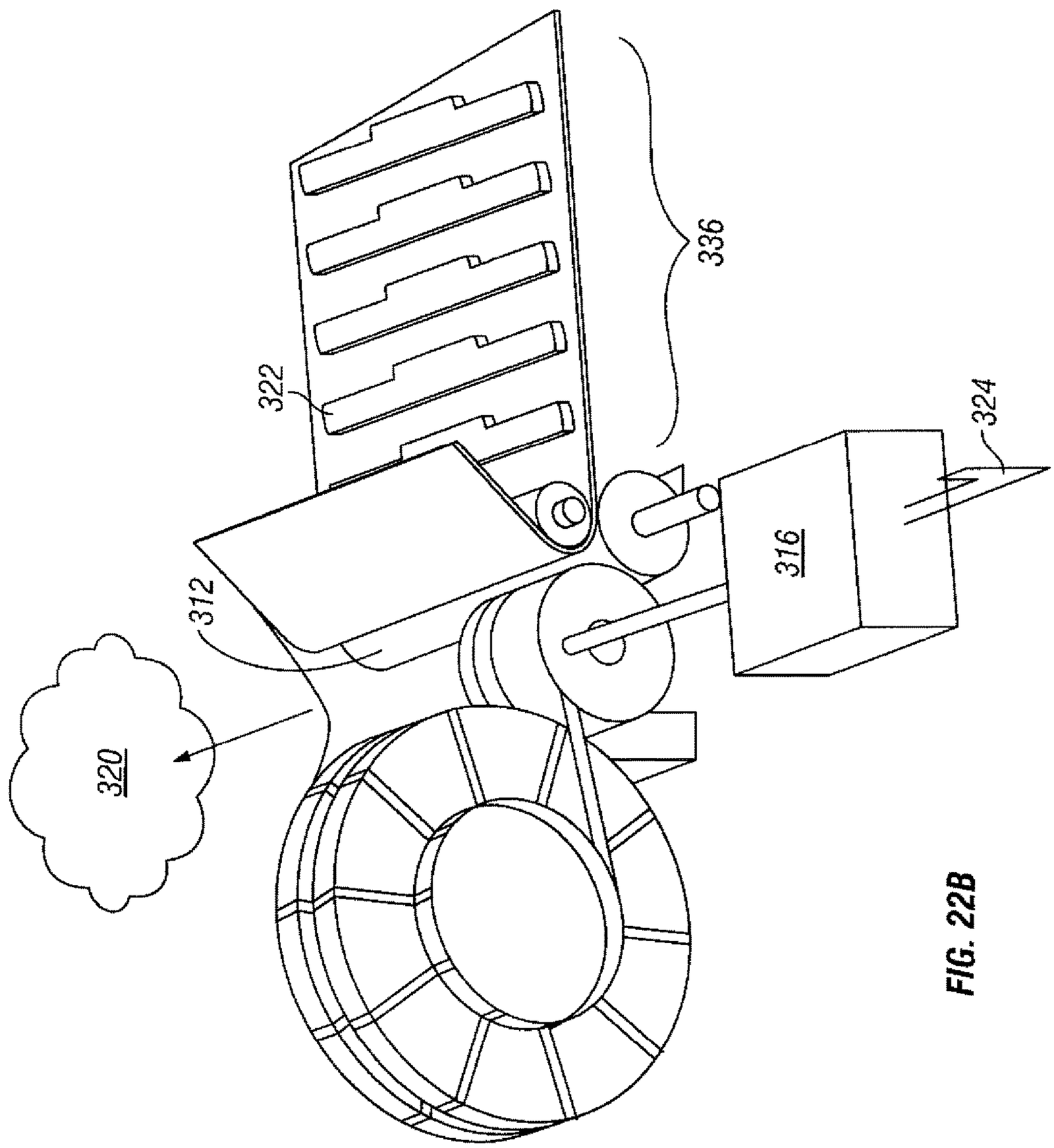

FIG. 22B

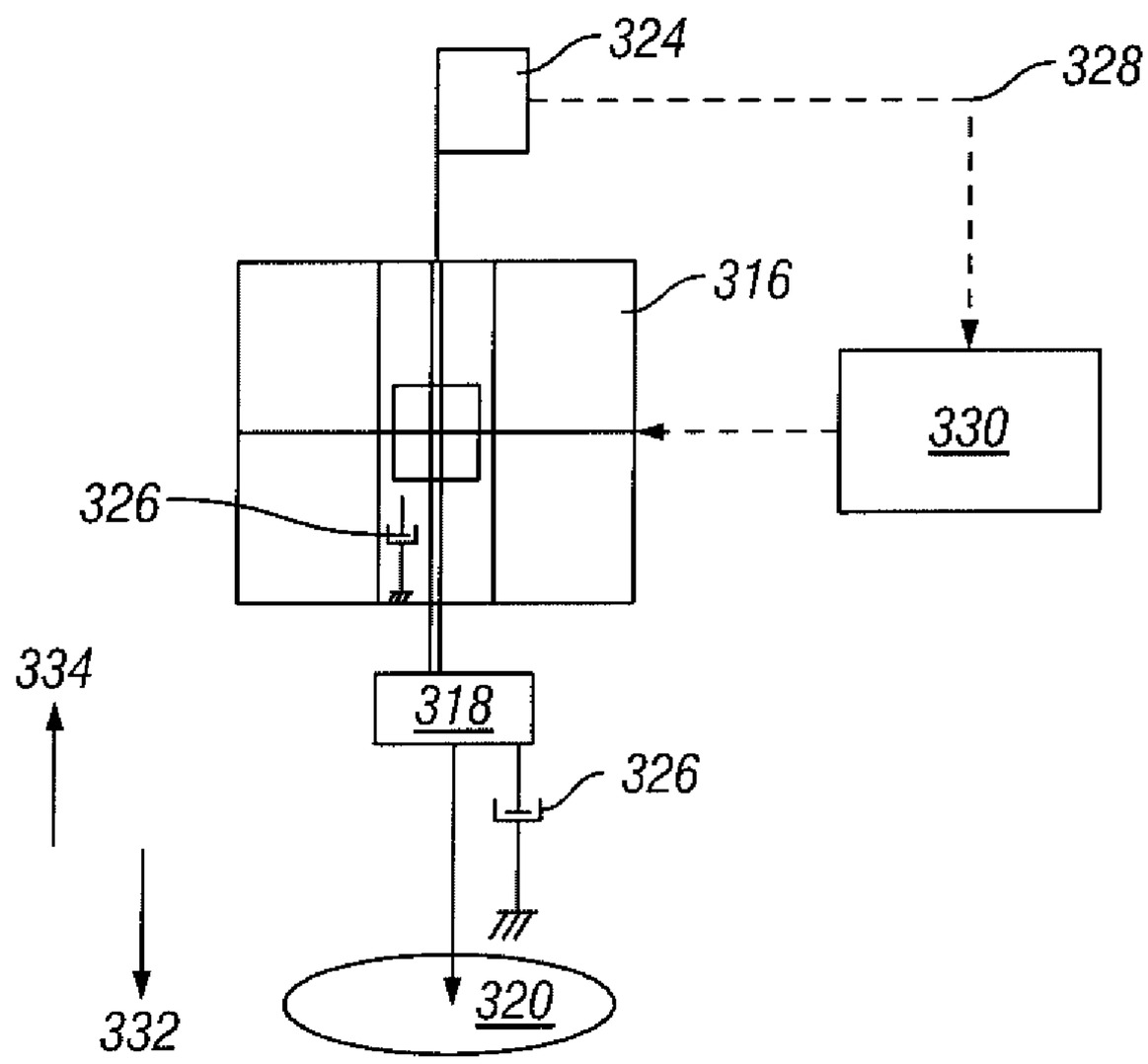

FIG. 22C

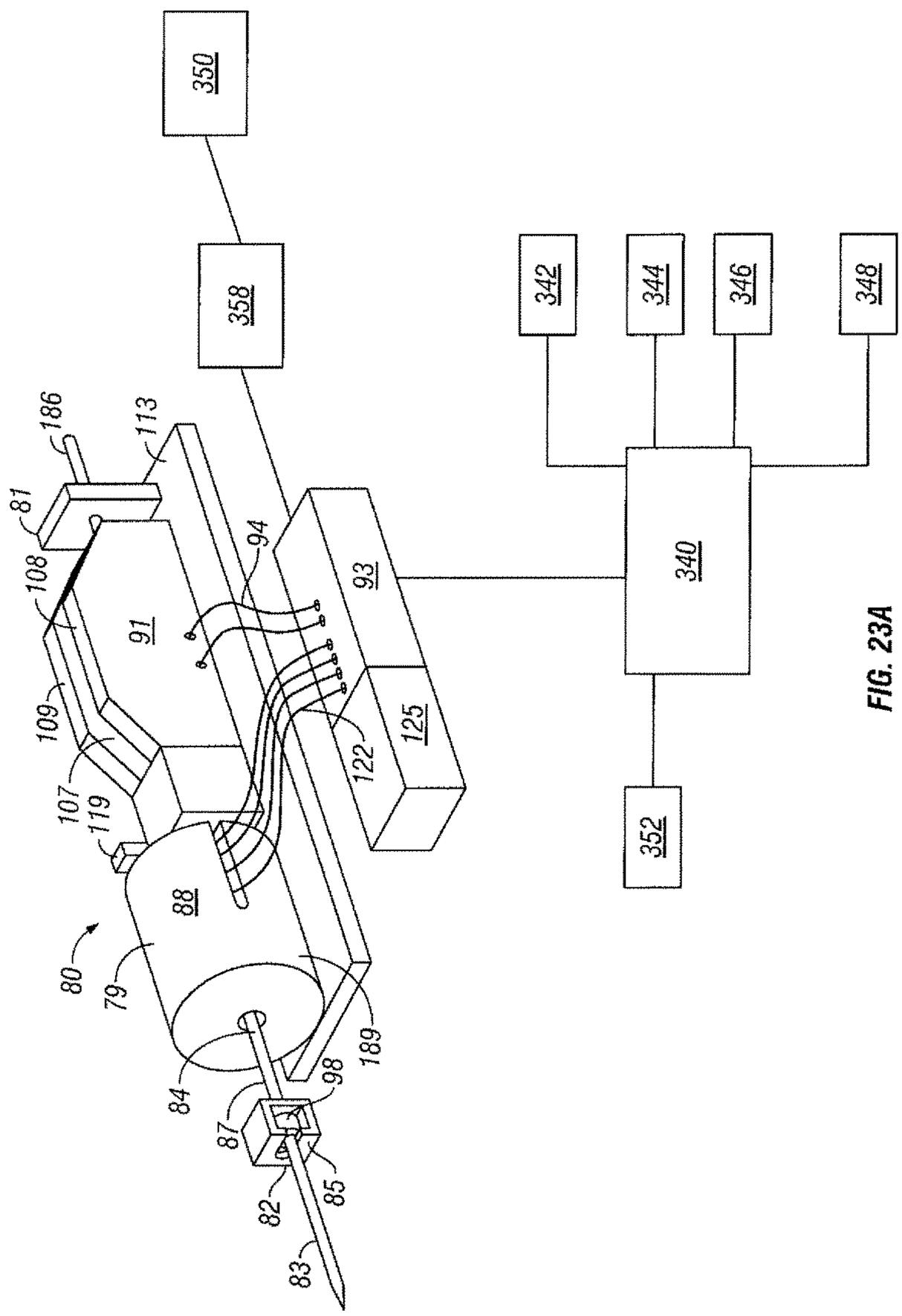
350
358
342
344
346
348
340
352
93
125
122
94
91
88
80
79
81
108
109
107
119
186
113
84
87
82
83
85
98
189

FIG. 23A

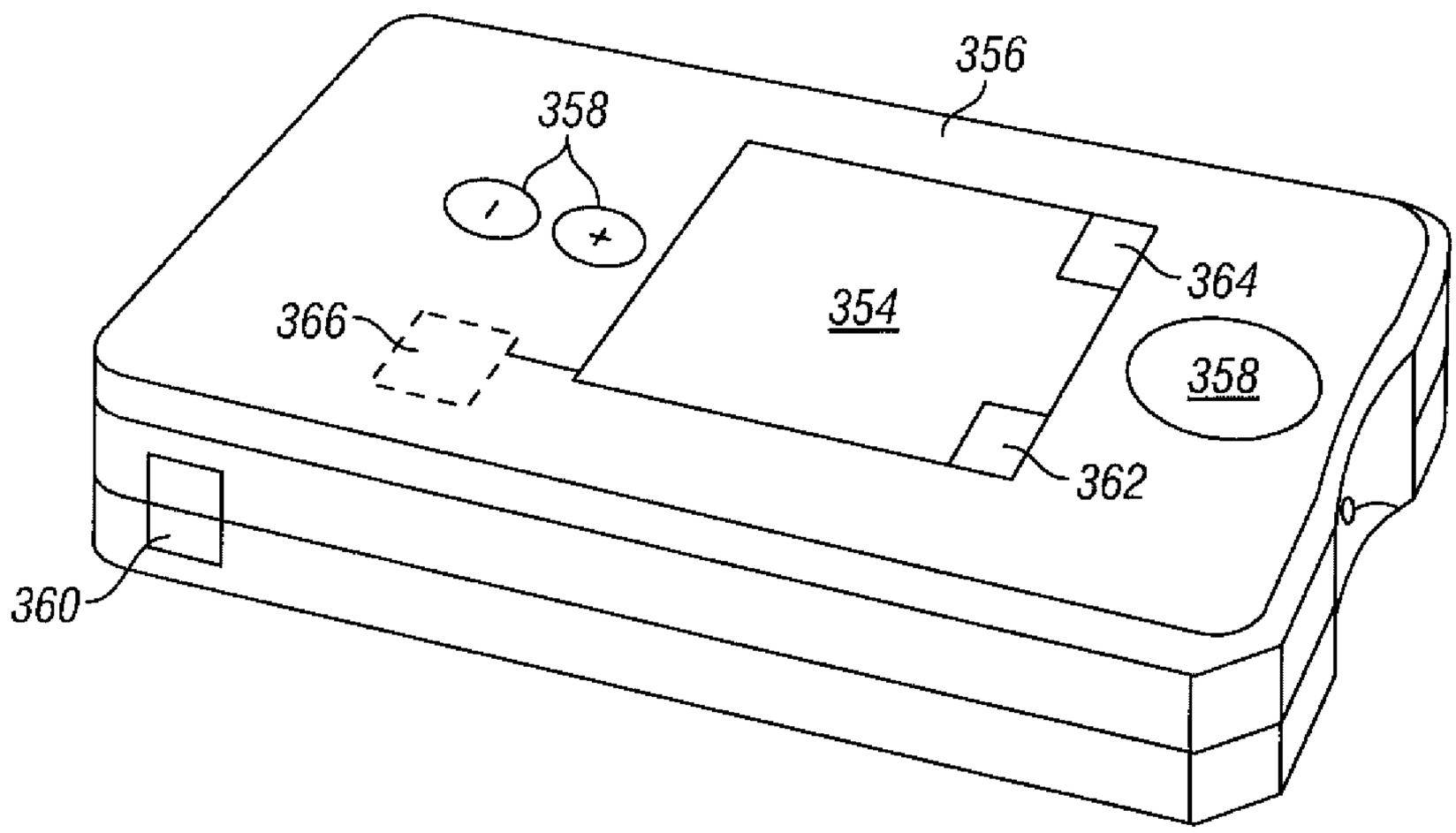

FIG. 23B

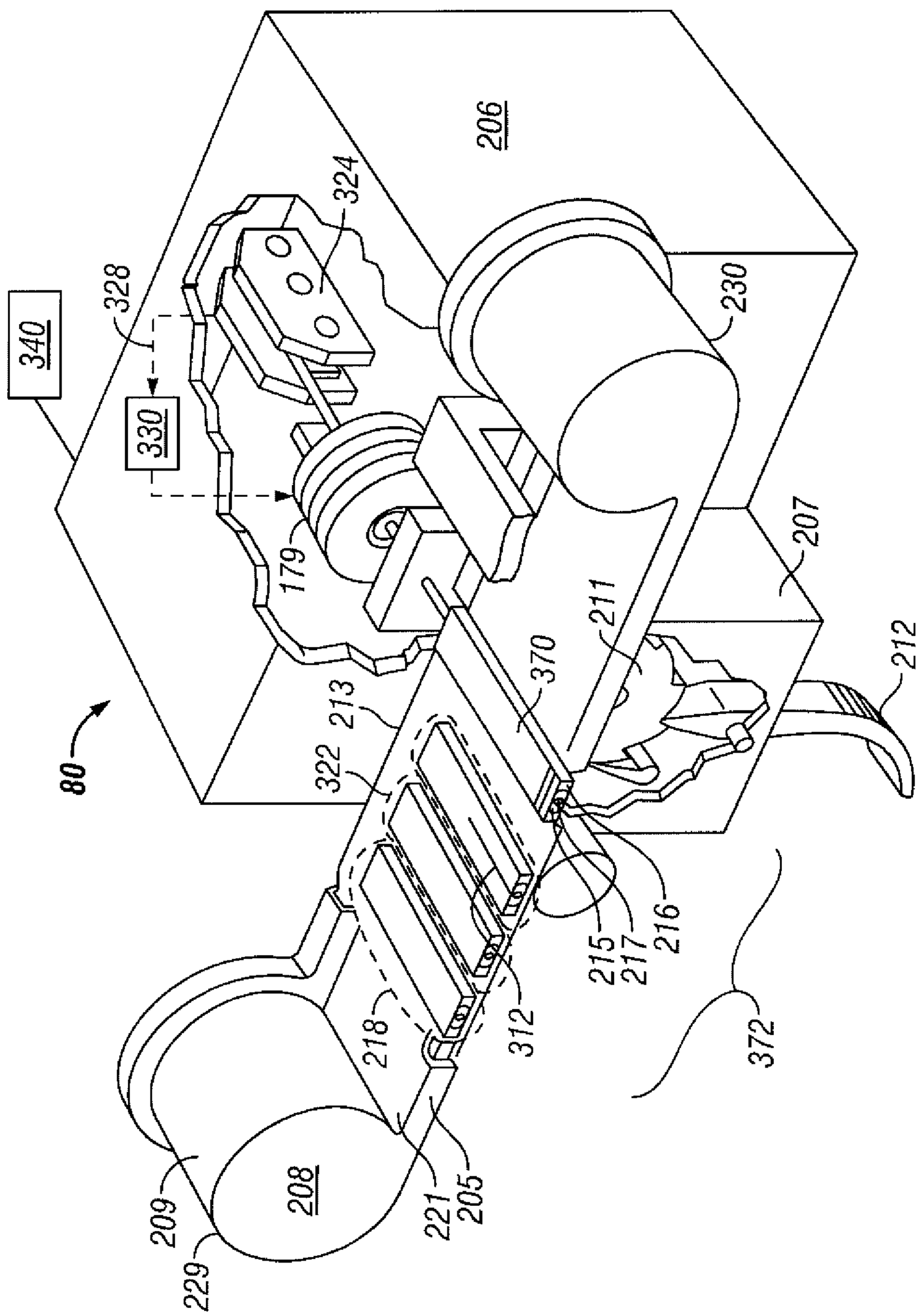
340
328
330
324
206
230
207
179
211
212
370
213
322
80
215
217
216
312
218
372
208
209
229
221
205

FIG. 24

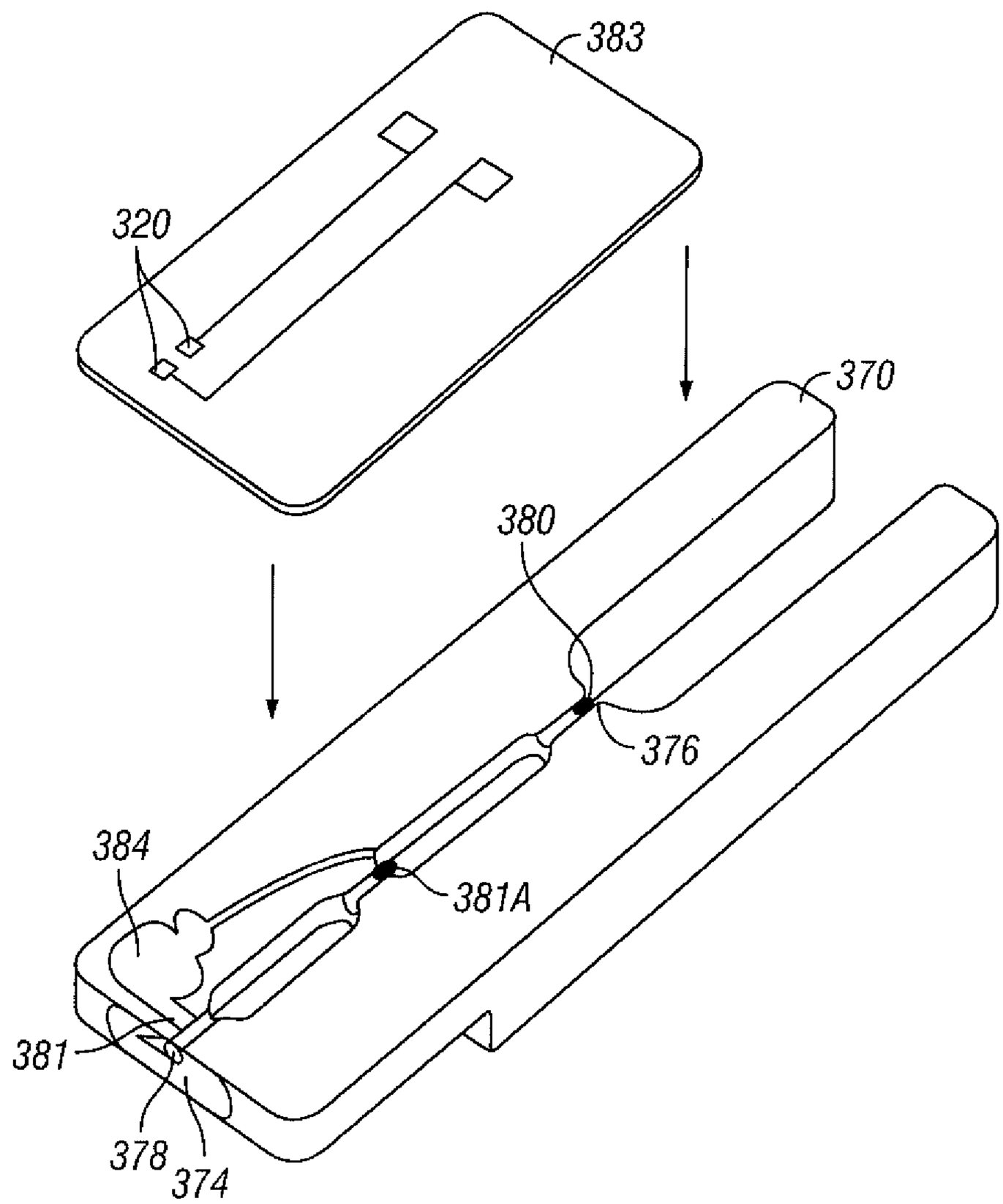

FIG. 25

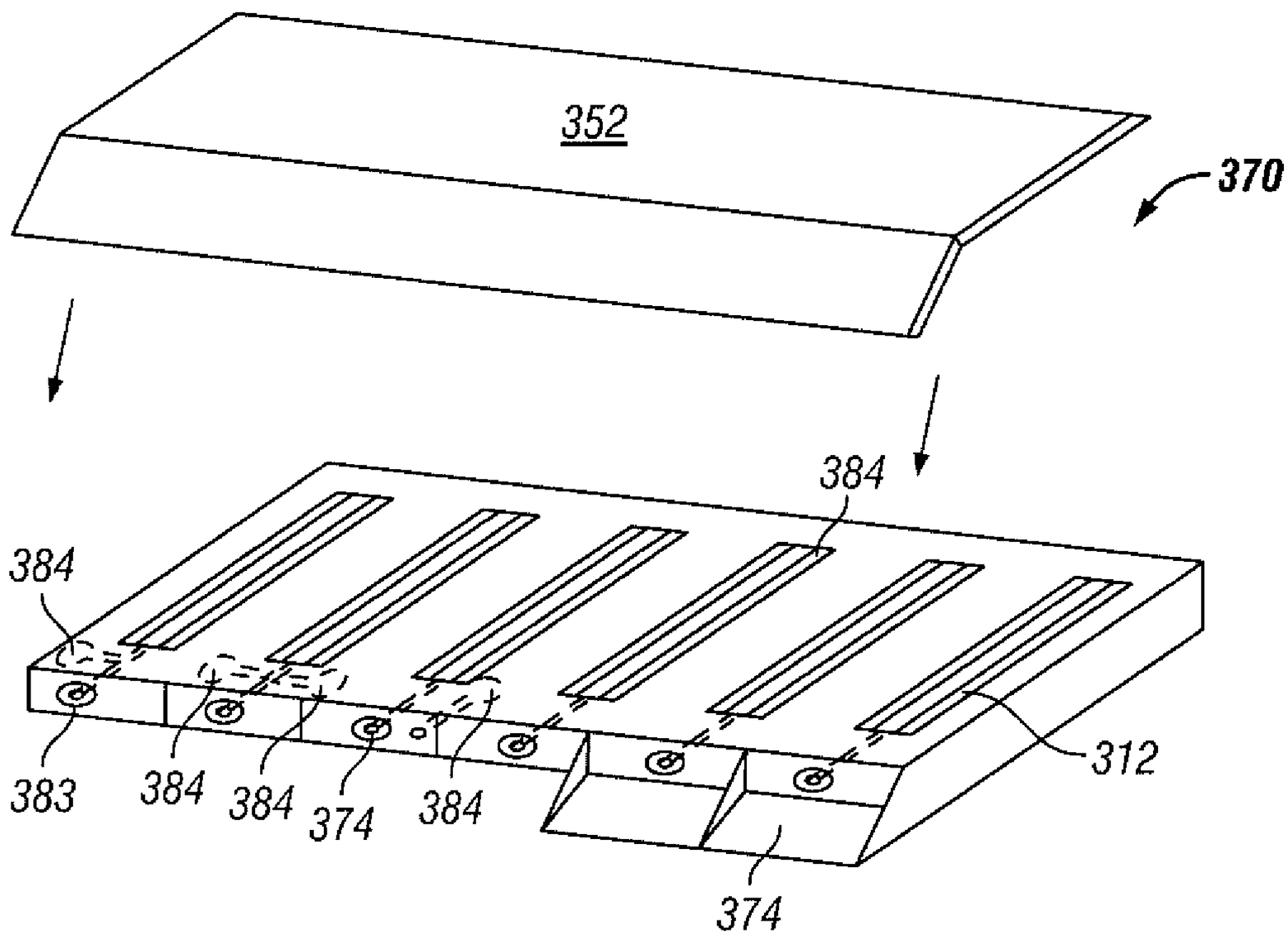

FIG. 26

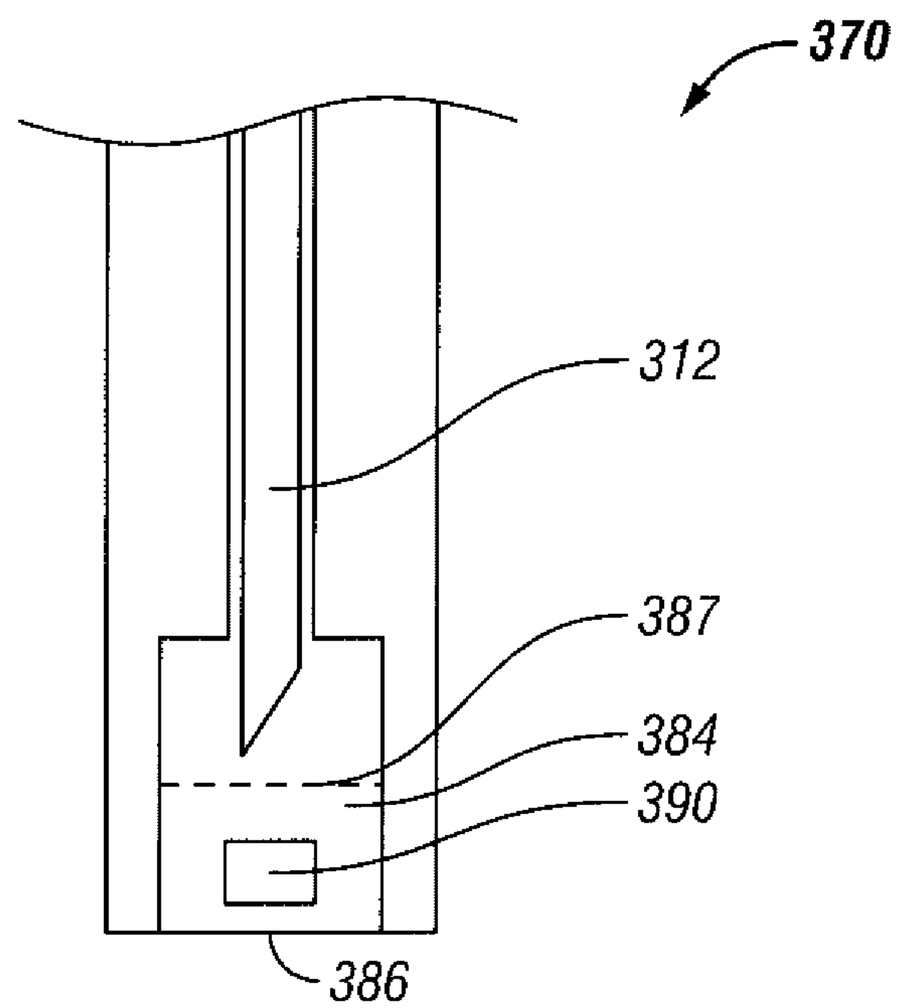

FIG. 27

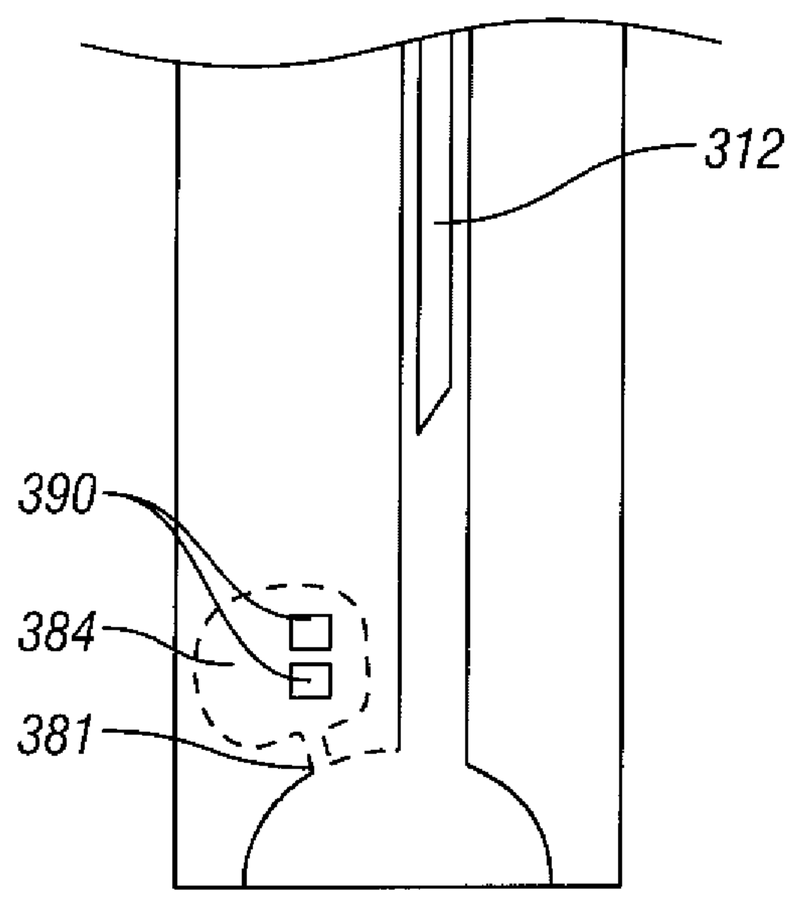

FIG. 28

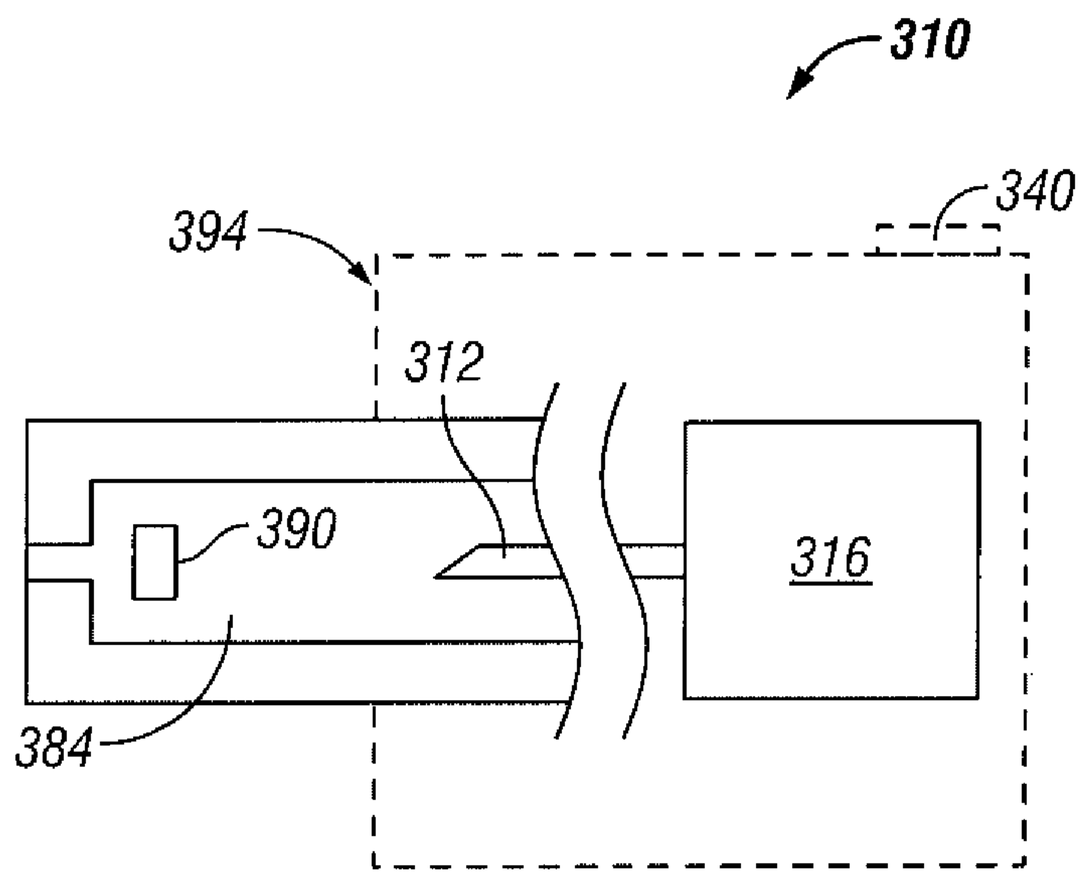

FIG. 29

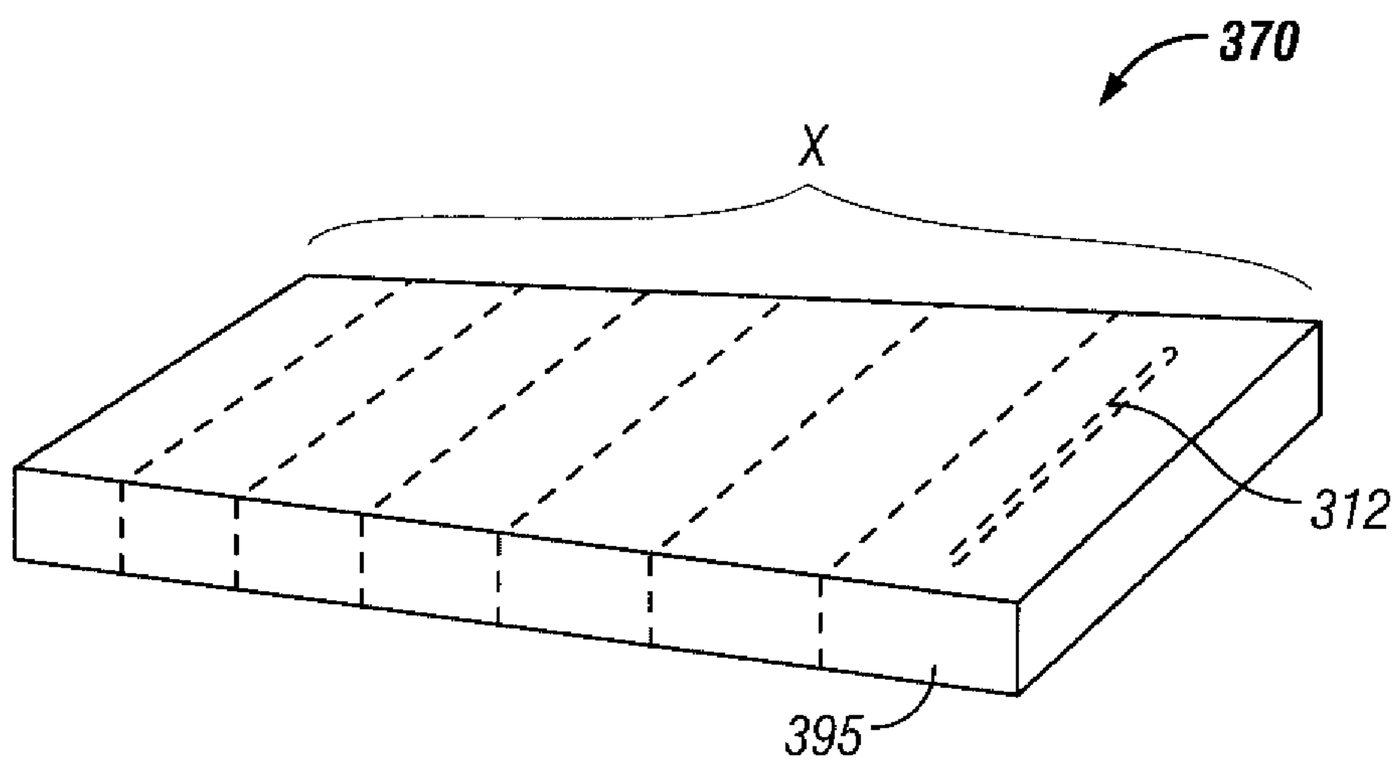

FIG. 30

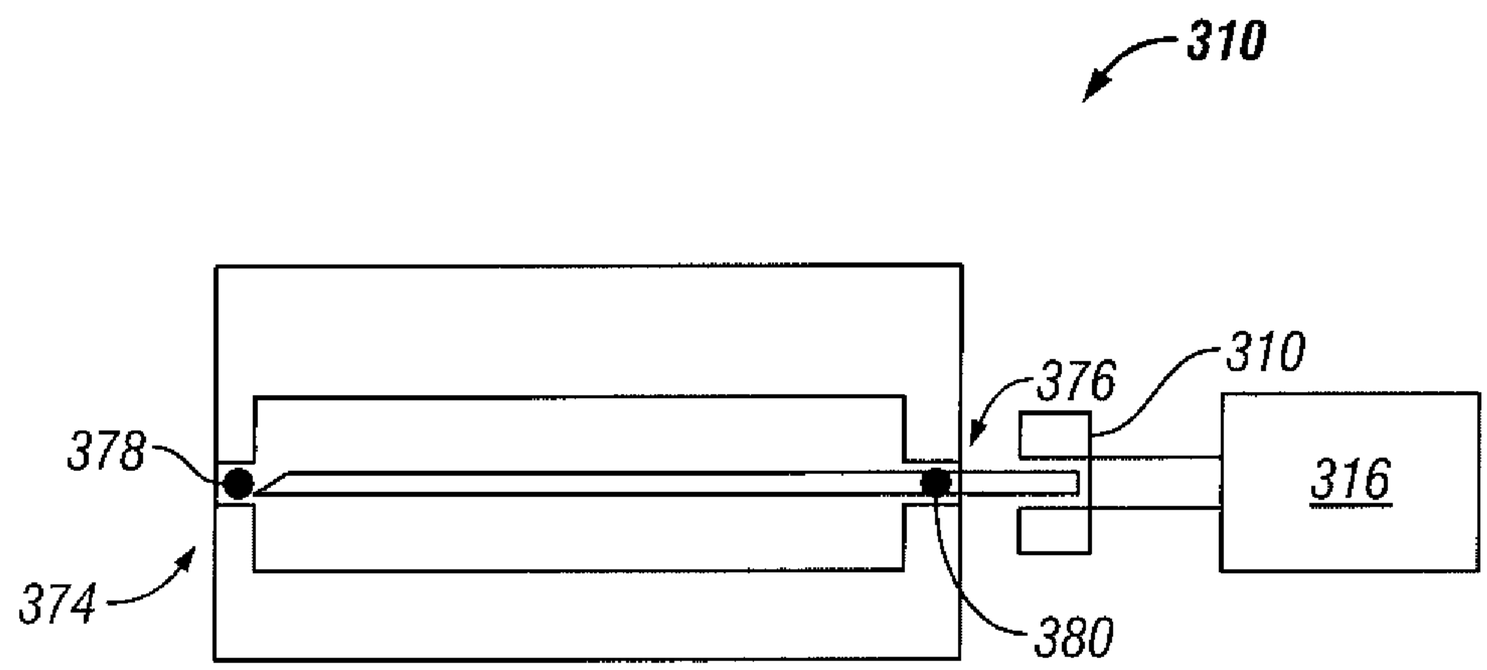

FIG. 31

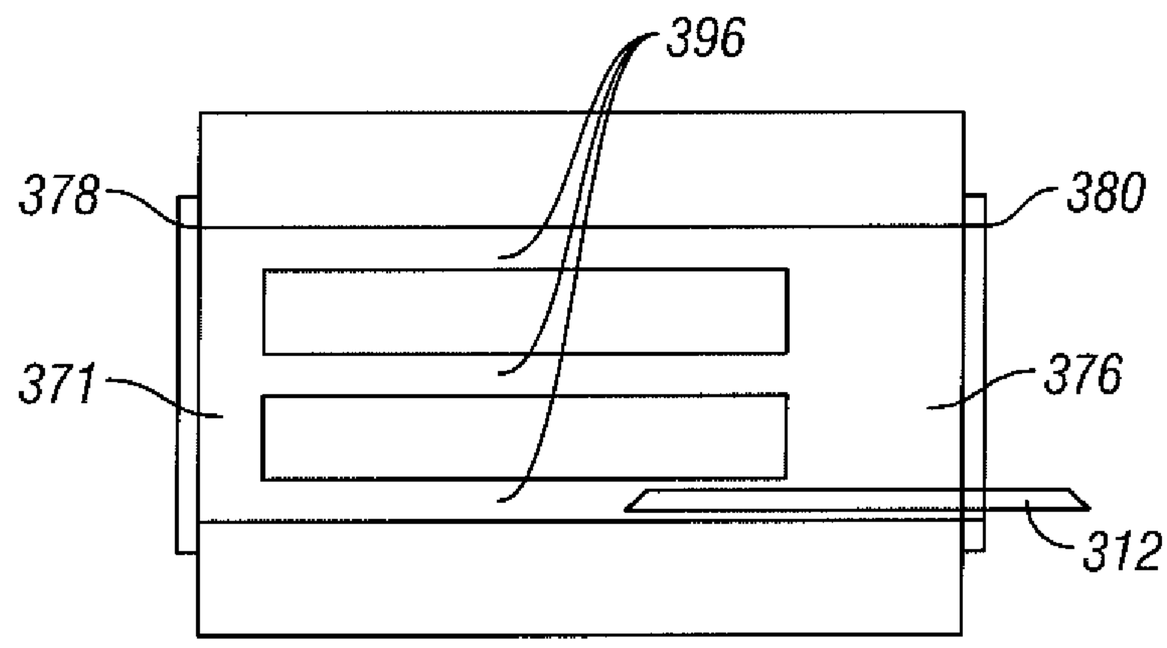

FIG. 32

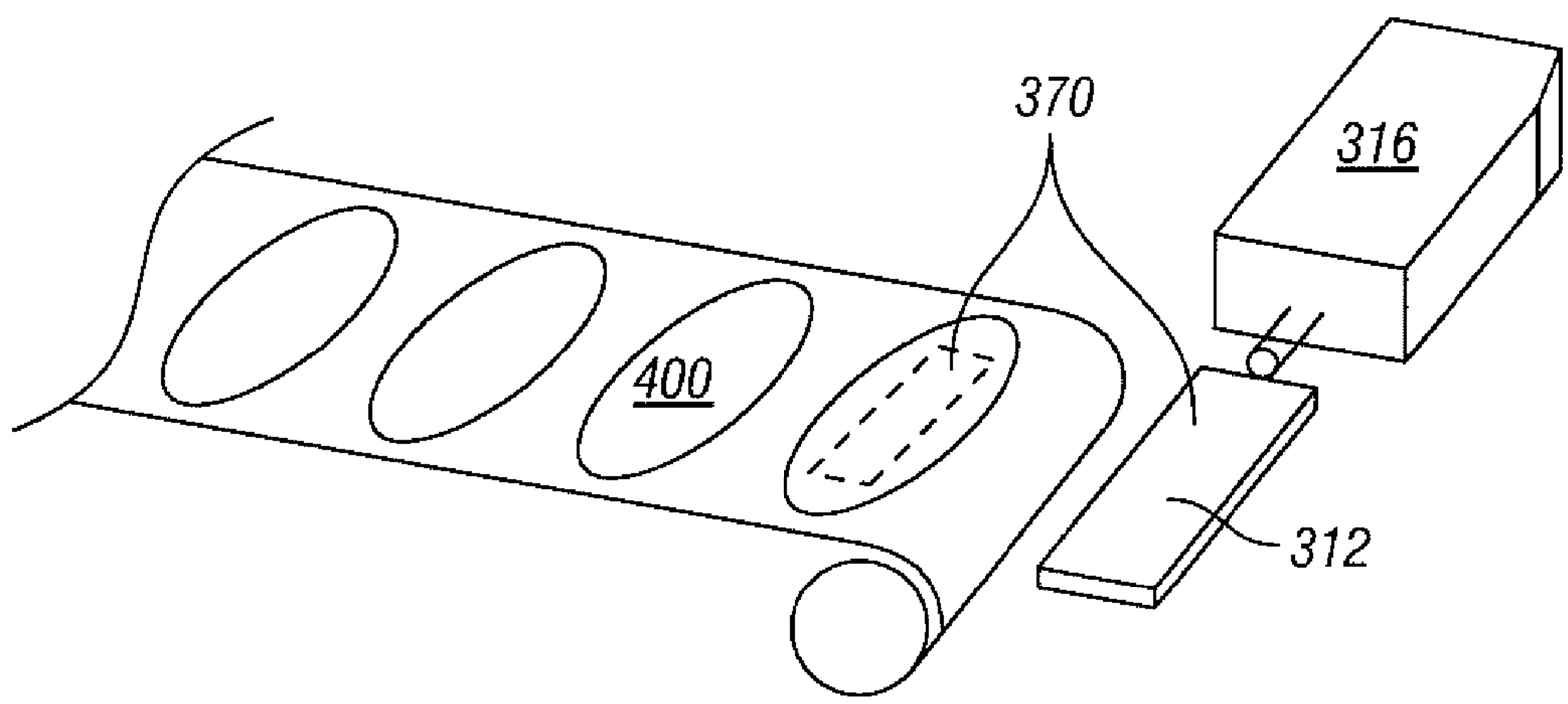

FIG. 33

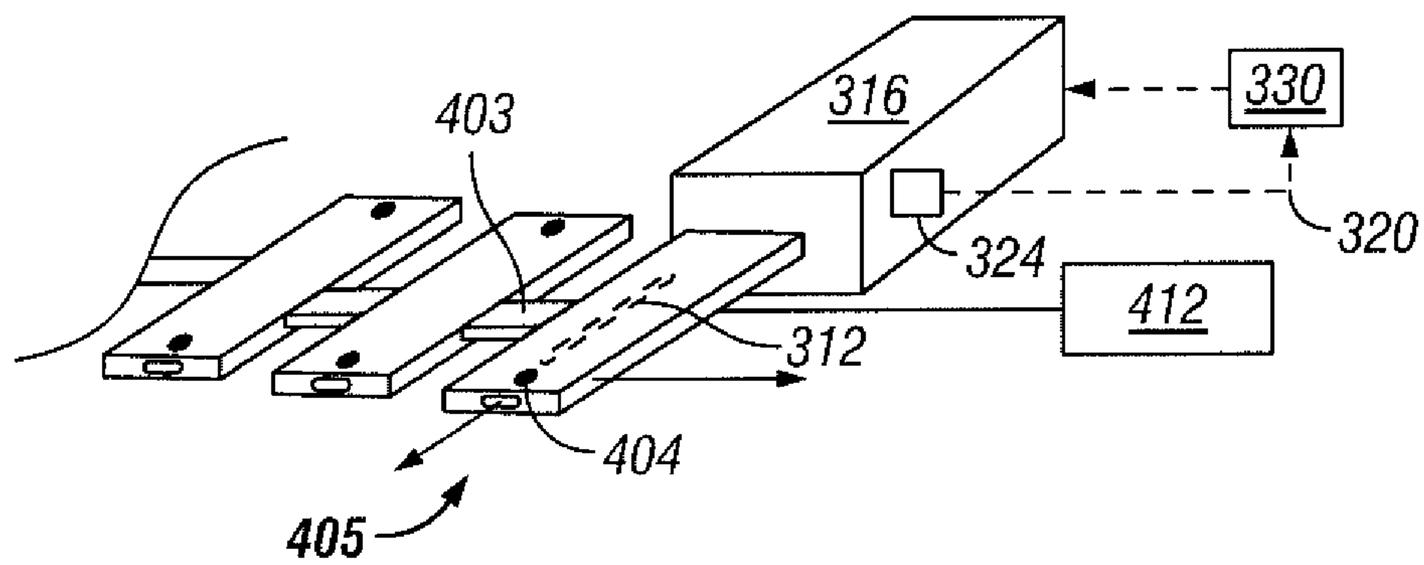

FIG. 34

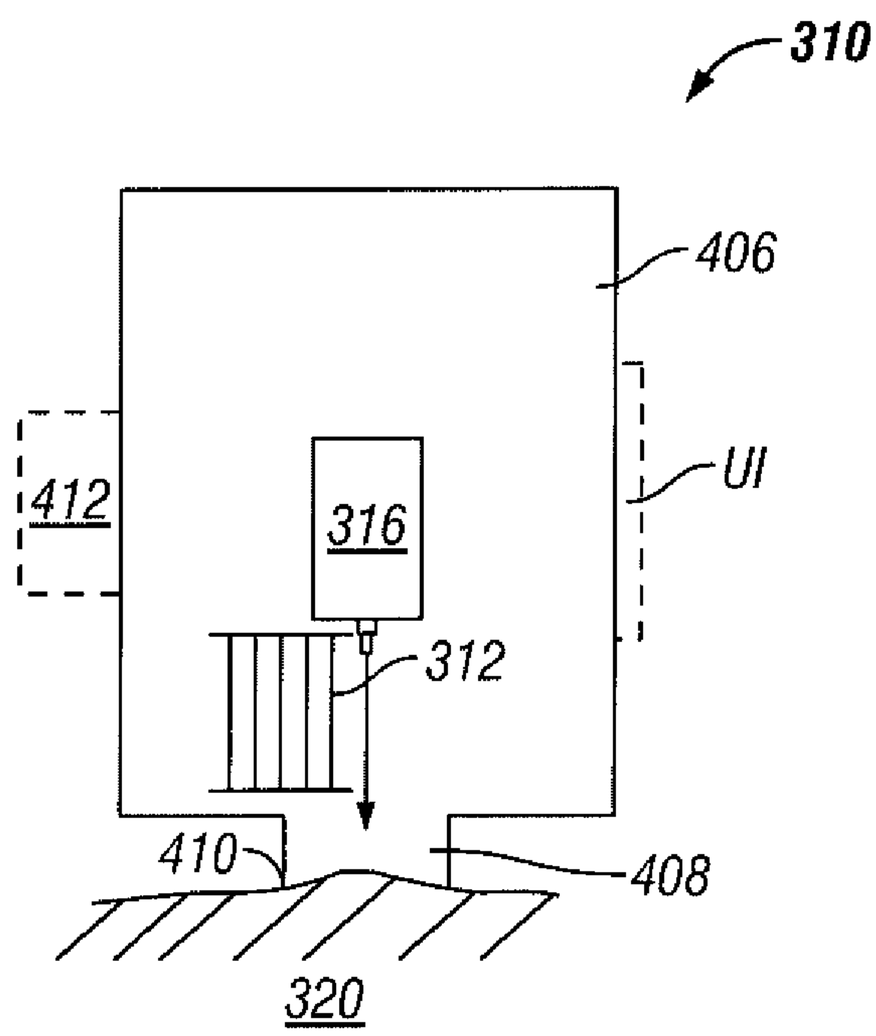

FIG. 35

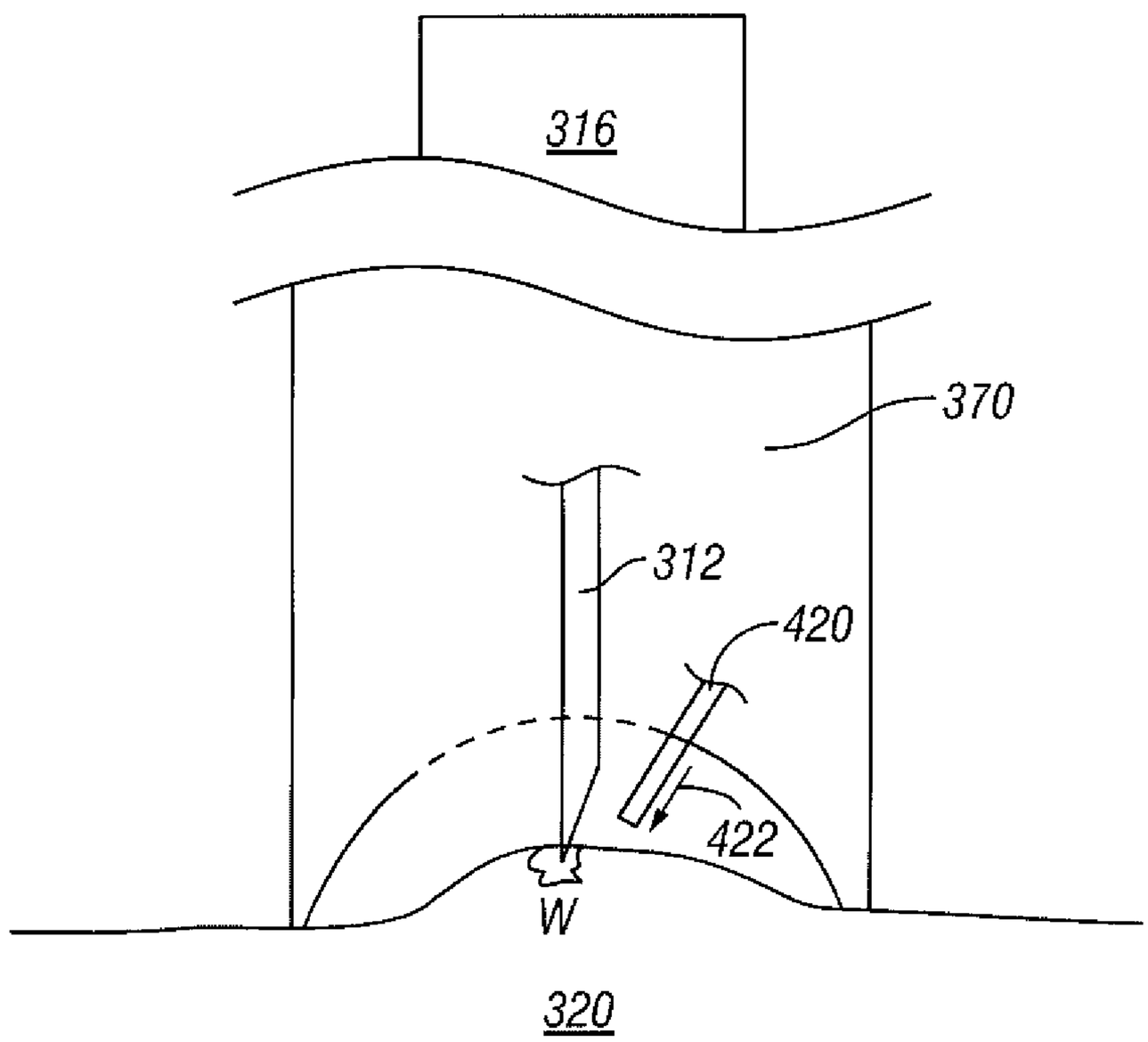

FIG. 36

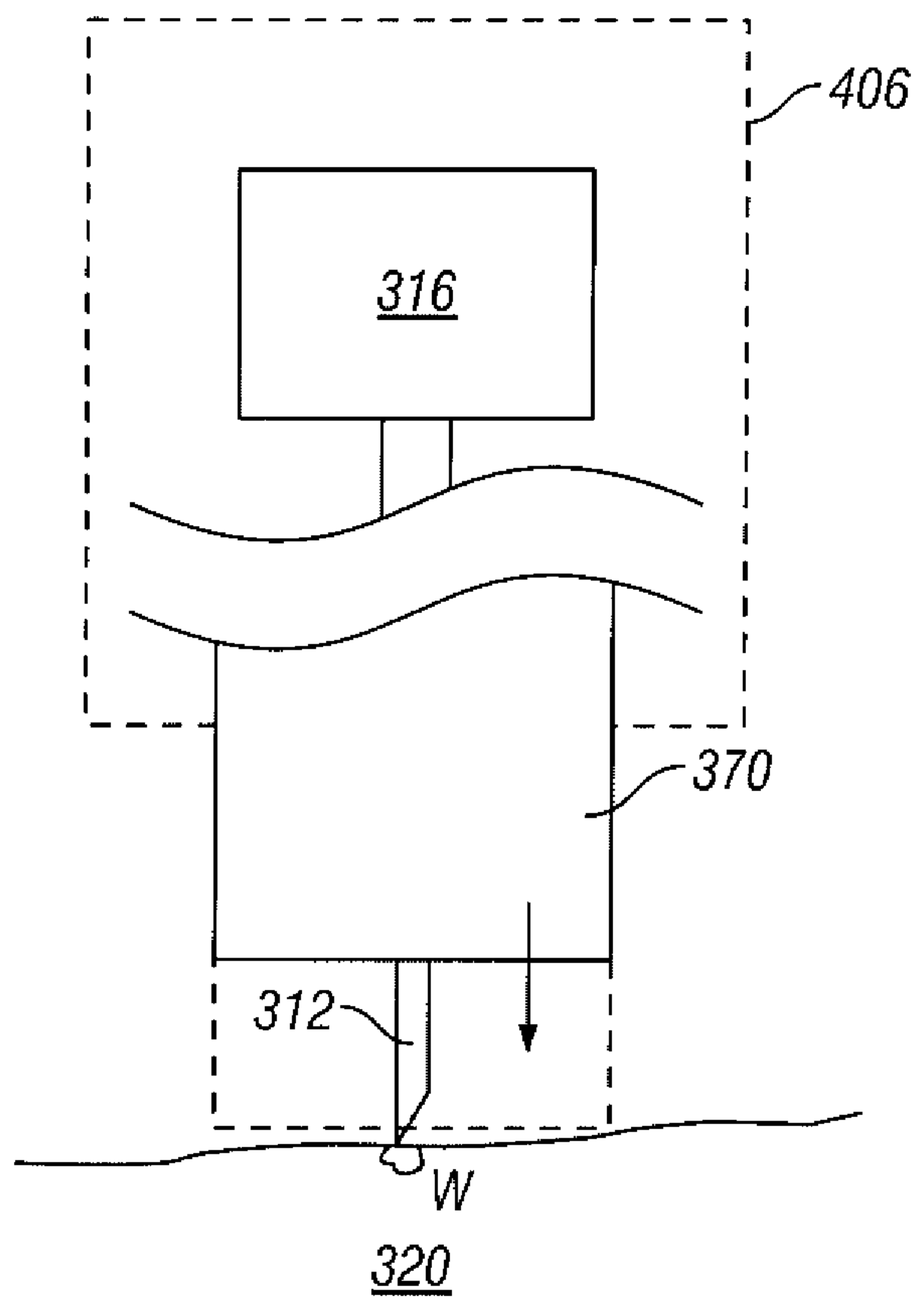

FIG. 37

METHOD AND APPARATUS FOR PENETRATING TISSUE

CROSS-REFERENCE TO RELATED APPLICATIONS

This application is a continuation of U.S. Ser. No. 11/536,720 filed Sep. 29, 2006 now U.S. Pat. No. 8,690,796, which is a continuation of U.S. Ser. No. 10/335,212, filed Dec. 31, 2002 now U.S. Pat. No. 7,547,287, which application is a continuation-in-part and of U.S. Ser. No. 10/127,395, filed Apr. 19, 2002 now U.S. Pat. No. 7,025,774. This application is also a continuation of U.S. Ser. No. 10/237,261, filed Sep. 5, 2002 now U.S. Pat. No. 7,344,507, and U.S. Ser. No. 10/237,262, filed Sep. 5, 2002 now U.S. Pat. No. 7,175,642. All applications listed above are fully incorporated herein by reference for all purposes.

BACKGROUND OF THE INVENTION

Lancing devices are known in the medical health-care products industry for piercing the skin to produce blood for analysis. Typically, a drop of blood for this type of analysis is obtained by making a small incision in the fingertip, creating a small wound, which generates a small blood droplet on the surface of the skin.

Early methods of lancing included piercing or slicing the skin with a needle or razor. Current methods utilize lancing devices that contain a multitude of spring, cam and mass actuators to drive the lancet. These include cantilever springs, diaphragms, coil springs, as well as gravity plumbs used to drive the lancet. The device may be held against the skin and mechanically triggered to ballistically launch the lancet. Unfortunately, the pain associated with each lancing event using known technology discourages patients from testing. In addition to vibratory stimulation of the skin as the driver impacts the end of a launcher stop, known spring based devices have the possibility of harmonically oscillating against the patient tissue, causing multiple strikes due to recoil. This recoil and multiple strikes of the lancet against the patient is one major impediment to patient compliance with a structured glucose monitoring regime.

Another impediment to patient compliance is the lack of spontaneous blood flow generated by known lancing technology. In addition to the pain as discussed above, a patient may need more than one lancing event to obtain a blood sample since spontaneous blood generation is unreliable using known lancing technology. Thus the pain is multiplied by the number of tries it takes to successfully generate spontaneous blood flow. Different skin thickness may yield different results in terms of pain perception, blood yield and success rate of obtaining blood between different users of the lancing device. Known devices poorly account for these skin thickness variations.

A still further impediment to improved compliance with glucose monitoring are the many steps and hassle associated with each lancing event. Many diabetic patients that are insulin dependent may need to self-test for blood glucose levels five to six times daily. The large number of steps required in traditional methods of glucose testing, ranging from lancing, to milking of blood, applying blood to the test strip, and getting the measurements from the test strip, discourages many diabetic patients from testing their blood glucose levels as often as recommended. Older patients and those with deteriorating motor skills encounter difficulty loading lancets into launcher devices, transferring blood onto a test strip, or inserting thin test strips into slots on

glucose measurement meters. Additionally, the wound channel left on the patient by known systems may also be of a size that discourages those who are active with their hands or who are worried about healing of those wound channels from testing their glucose levels.

SUMMARY OF THE INVENTION

Accordingly, an object of the present invention is to provide improved tissue penetrating systems, and their methods of use.

Another object of the present invention is to provide tissue penetrating systems, and their methods of use, that provide reduced pain when penetrating a target tissue.

Yet another object of the present invention is to provide tissue penetrating systems, and their methods of use, that provide controlled depth of penetration.

Yet another object of the present invention is to provide tissue penetrating systems, and their methods of use, that provide controlled depth of penetration.

Still a further object of the present invention is to provide tissue penetrating systems, and their methods of use, that provide controlled velocities into and out of target tissue.

A further object of the present invention is to provide tissue penetrating systems, and their methods of use, that provide stimulation to a target tissue.

Another object of the present invention is to provide tissue penetrating systems, and their methods of use, that apply a pressure to a target tissue.

Yet another object of the present invention is to provide tissue penetrating systems, and their methods of use, that have low volume sample chambers.

Still another object of the present invention is to provide tissue penetrating systems, and their methods of use, that have sample chambers with volumes that do not exceed 1 μL.

Another object of the present invention is to provide tissue penetrating systems, and their methods of use, that have multiple penetrating members housed in a cartridge.

These and other objects of the present invention are achieved in a tissue penetrating system that has a housing member, a plurality of penetrating members positioned in the housing member and a plurality of sample chambers. Each sample chamber is associated with a penetrating member. A tissue stabilizing member has a tissue interface surface configured to be applied to a tissue surface and provide for spontaneous flow of blood for sample capture. The tissue stabilizing member is coupled to the housing.

BRIEF DESCRIPTION OF THE DRAWINGS

FIG. **1** illustrates an embodiment of a controllable force driver in the form of a cylindrical electric penetrating member driver using a coiled solenoid-type configuration.

FIG. **2**A illustrates a displacement over time profile of a penetrating member driven by a harmonic spring/mass system.

FIG. **2**B illustrates the velocity over time profile of a penetrating member driver by a harmonic spring/mass system.

FIG. **2**C illustrates a displacement over time profile of an embodiment of a controllable force driver.

FIG. **2**D illustrates a velocity over time profile of an embodiment of a controllable force driver.

FIG. **3** is a diagrammatic view illustrating a controlled feed-back loop.

FIG. **4** is a perspective view of a tissue penetration device having features of the invention.

FIG. **5** is an elevation view in partial longitudinal section of the tissue penetration device of FIG. **4**.

FIGS. **6**A-**6**C show a flowchart illustrating a penetrating member control method.

FIG. **7** is a diagrammatic view of a patient's finger and a penetrating member tip moving toward the skin of the finger.

FIG. **8** is a diagrammatic view of a patient's finger and the penetrating member tip making contact with the skin of a patient's finger.

FIG. **9** is a diagrammatic view of the penetrating member tip depressing the skin of a patient's finger.

FIG. **10** is a diagrammatic view of the penetrating member tip further depressing the skin of a patient's finger.

FIG. **11** is a diagrammatic view of the penetrating member tip penetrating the skin of a patient's finger.

FIG. **12** is a diagrammatic view of the penetrating member tip penetrating the skin of a patient's finger to a desired depth.

FIG. **13** is a diagrammatic view of the penetrating member tip withdrawing from the skin of a patient's finger.

FIGS. **14**-**18** illustrate a method of tissue penetration that may measure elastic recoil of the skin.

FIG. **19** is a perspective view in partial section of a tissue penetration sampling device with a cartridge of sampling modules.

FIG. **20** is a perspective view of a sampling module cartridge with the sampling modules arranged in a ring configuration.

FIG. **21** illustrate an embodiment of a cartridge for use in sampling having a sampling cartridge body and a penetrating member cartridge body.

FIG. **22**A shows a device for use on a tissue site having a plurality of penetrating members.

FIG. **22**B shows rear view of a device for use on a tissue site having a plurality of penetrating members.

FIG. **22**C shows a schematic of a device for use on a tissue site with a feedback loop and optionally a damper.

FIG. **23**A shows an embodiment of a device with a user interface.

FIG. **23**B shows an outer view of a device with a user interface.

FIG. **24** is a cut away view of a system for sampling body fluid.

FIG. **25** is an exploded view of a cartridge for use with a system for sampling body fluid.

FIG. **26** is an exploded view of a cartridge having multiple penetrating members for use with a system for sampling body fluid.

FIGS. **27**-**28** show cartridges for use with a system for sampling body fluid.

FIG. **29** shows a cutaway view of another embodiment of a system for sampling body fluid.

FIG. **30** shows the density associated with a cartridge according to the present invention.

FIG. **31** shows a cutaway view of another embodiment of a system for sampling body fluid.

FIG. **32** is a cut away view of a cartridge according to the present invention.

FIGS. **33** and **34** illustrates embodiments with a plurality of cartridges.

FIG. **35** shows an embodiment of the present invention with a tissue stabilizing member.

FIG. **36** shows a cartridge according to the present invention with a tissue stabilizing member.

FIG. **37** shows a system according to the present invention with a moveable cartridge.

DESCRIPTION OF THE SPECIFIC EMBODIMENTS

The present invention provides a solution for body fluid sampling. Specifically, some embodiments of the present invention provides a penetrating member device for consistently creating a wound with spontaneous body fluid flow from a patient. The invention may be a multiple penetrating member device with an optional high density design. It may use penetrating members of smaller size than known penetrating members. The device may be used for multiple lancing events without having to remove a disposable from the device or for the user to handle sharps. The invention may provide improved sensing capabilities. At least some of these and other objectives described herein will be met by embodiments of the present invention.

It is to be understood that both the foregoing general description and the following detailed description are exemplary and explanatory only and are not restrictive of the invention, as claimed. It should be noted that, as used in the specification and the appended claims, the singular forms "a", "an" and "the" include plural referents unless the context clearly dictates otherwise. Thus, for example, reference to "a material" may include mixtures of materials, reference to "a chamber" may include multiple chambers, and the like. References cited herein are hereby incorporated by reference in their entirety, except to the extent that they conflict with teachings explicitly set forth in this specification.

In this specification and in the claims which follow, reference will be made to a number of terms which shall be defined to have the following meanings:

"Optional" or "optionally" means that the subsequently described circumstance may or may not occur, so that the description includes instances where the circumstance occurs and instances where it does not. For example, if a device optionally contains a feature for analyzing a blood sample, this means that the analysis feature may or may not be present, and, thus, the description includes structures wherein a device possesses the analysis feature and structures wherein the analysis feature is not present.

"Analyte detecting member" refers to any use, singly or in combination, of chemical test reagents and methods, electrical test circuits and methods, physical test components and methods, optical test components and methods, and biological test reagents and methods to yield information about a blood sample. Such methods are well known in the art and may be based on teachings of, e.g. Tietz Textbook of Clinical Chemistry, 3d Ed., Sec. V, pp. 776-78 (Burtis & Ashwood, Eds., W.B. Saunders Company, Philadelphia, 1999); U.S. Pat. No. 5,997,817 to Chrismore et al. (Dec. 7, 1999); U.S. Pat. No. 5,059,394 to Phillips et al. (Oct. 22, 1991); U.S. Pat. No. 5,001,054 to Wagner et al. (Mar. 19, 1991); and U.S. Pat. No. 4,392,933 to Nakamura et al. (Jul. 12, 1983), the teachings of which are hereby incorporated by reference, as well as others. Analyte detecting member may include tests in the sample test chamber that test electrochemical properties of the blood, or they may include optical means for sensing optical properties of the blood (e.g. oxygen saturation level), or they may include biochemical reagents (e.g. antibodies) to sense properties (e.g. presence of antigens) of the blood. The analyte detecting member may comprise biosensing or reagent material that will react with an analyte in blood (e.g. glucose) or other body fluid so that

an appropriate signal correlating with the presence of the analyte is generated and can be read by the reader apparatus. By way of example and not limitation, analyte detecting member may "associated with", "mounted within", or "coupled to" a chamber or other structure when the analyte detecting member participates in the function of providing an appropriate signal about the blood sample to the reader device. Analyte detecting member may also include nanowire analyte detecting members as described herein. Analyte detecting member may use potentiometric, coulometric, or other method useful for detection of analyte levels.

The present invention may be used with a variety of different penetrating member drivers. It is contemplated that these penetrating member drivers may be spring based, solenoid based, magnetic driver based, nanomuscle based, or based on any other mechanism useful in moving a penetrating member along a path into tissue. It should be noted that the present invention is not limited by the type of driver used with the penetrating member feed mechanism. One suitable penetrating member driver for use with the present invention is shown in FIG. **1**. This is an embodiment of a solenoid type electromagnetic driver that is capable of driving an iron core or slug mounted to the penetrating member assembly using a direct current (DC) power supply. The electromagnetic driver includes a driver coil pack that is divided into three separate coils along the path of the penetrating member, two end coils and a middle coil. Direct current is alternated to the coils to advance and retract the penetrating member. Although the driver coil pack is shown with three coils, any suitable number of coils may be used, for example, 4, 5, 6, 7 or more coils may be used.

Referring to the embodiment of FIG. **1**, the stationary iron housing **10** may contain the driver coil pack with a first coil **12** flanked by iron spacers **14** which concentrate the magnetic flux at the inner diameter creating magnetic poles. The inner insulating housing **16** isolates the penetrating member **18** and iron core **20** from the coils and provides a smooth, low friction guide surface. The penetrating member guide **22** further centers the penetrating member **18** and iron core **20**. The penetrating member **18** is protracted and retracted by alternating the current between the first coil **12**, the middle coil, and the third coil to attract the iron core **20**. Reversing the coil sequence and attracting the core and penetrating member back into the housing retracts the penetrating member. The penetrating member guide **22** also serves as a stop for the iron core **20** mounted to the penetrating member **18**.

As discussed above, tissue penetration devices which employ spring or cam driving methods have a symmetrical or nearly symmetrical actuation displacement and velocity profiles on the advancement and retraction of the penetrating member as shown in FIGS. **2** and **3**. In most of the available lancet devices, once the launch is initiated, the stored energy determines the velocity profile until the energy is dissipated. Controlling impact, retraction velocity, and dwell time of the penetrating member within the tissue can be useful in order to achieve a high success rate while accommodating variations in skin properties and minimize pain. Advantages can be achieved by taking into account of the fact that tissue dwell time is related to the amount of skin deformation as the penetrating member tries to puncture the surface of the skin and variance in skin deformation from patient to patient based on skin hydration.

In this embodiment, the ability to control velocity and depth of penetration may be achieved by use of a controllable force driver where feedback is an integral part of driver control. Such drivers can control either metal or polymeric penetrating members or any other type of tissue penetration element. The dynamic control of such a driver is illustrated in FIG. **2**C which illustrates an embodiment of a controlled displacement profile and FIG. **2**D which illustrates an embodiment of a the controlled velocity profile. These are compared to FIGS. **2**A and **2**B, which illustrate embodiments of displacement and velocity profiles, respectively, of a harmonic spring/mass powered driver. Reduced pain can be achieved by using impact velocities of greater than about 2 m/s entry of a tissue penetrating element, such as a lancet, into tissue. Other suitable embodiments of the penetrating member driver are described in commonly assigned, copending U.S. patent application Ser. No. 10/127,395, filed Apr. 19, 2002 and previously incorporated herein.

FIG. **3** illustrates the operation of a feedback loop using a processor **60**. The processor **60** stores profiles **62** in non-volatile memory. A user inputs information **64** about the desired circumstances or parameters for a lancing event. The processor **60** selects a driver profile **62** from a set of alternative driver profiles that have been preprogrammed in the processor **60** based on typical or desired tissue penetration device performance determined through testing at the factory or as programmed in by the operator. The processor **60** may customize by either scaling or modifying the profile based on additional user input information **64**. Once the processor has chosen and customized the profile, the processor **60** is ready to modulate the power from the power supply **66** to the penetrating member driver **68** through an amplifier **70**. The processor **60** may measure the location of the penetrating member **72** using a position sensing device performance determined through testing at the factory or as programmed in by the operator. The processor **60** may customize by either scaling or modifying the profile based on additional user input information **64**. Once the processor has chosen and customized the profile, the processor **60** is ready to modulate the power from the power supply **66** to the penetrating member driver **68** through an amplifier **70**. The processor **60** may measure the location of the penetrating member **72** using a position sensing mechanism **74** through an analog to digital converter **76** linear encoder or other such transducer. Examples of position sensing mechanisms have been described in the embodiments above and may be found in the specification for commonly assigned, copending U.S. patent application Ser. No. 10/127,395, filed Apr. 19, 2002 and previously incorporated herein. The processor **60** calculates the movement of the penetrating member by comparing the actual profile of the penetrating member to the predetermined profile. The processor **60** modulates the power to the penetrating member driver **68** through a signal generator **78**, which may control the amplifier **70** so that the actual velocity profile of the penetrating member does not exceed the predetermined profile by more than a preset error limit. The error limit is the accuracy in the control of the penetrating member.

After the lancing event, the processor **60** can allow the user to rank the results of the lancing event. The processor **60** stores these results and constructs a database **80** for the individual user. Using the database **79**, the processor **60** calculates the profile traits such as degree of painlessness, success rate, and blood volume for various profiles **62** depending on user input information **64** to optimize the profile to the individual user for subsequent lancing cycles. These profile traits depend on the characteristic phases of penetrating member advancement and retraction. The processor **60** uses these calculations to optimize profiles **62** for each user. In addition to user input information **64**, an internal clock allows storage in the database **79** of informa-

tion such as the time of day to generate a time stamp for the lancing event and the time between lancing events to anticipate the user's diurnal needs. The database stores information and statistics for each user and each profile that particular user uses.

In addition to varying the profiles, the processor **60** can be used to calculate the appropriate penetrating member diameter and geometry suitable to realize the blood volume required by the user. For example, if the user requires about 1-5 microliter volume of blood, the processor **60** may select a 200 micron diameter penetrating member to achieve these results. For each class of lancet, both diameter and lancet tip geometry, is stored in the processor **60** to correspond with upper and lower limits of attainable blood volume based on the predetermined displacement and velocity profiles.

The lancing device is capable of prompting the user for information at the beginning and the end of the lancing event to more adequately suit the user. The goal is to either change to a different profile or modify an existing profile. Once the profile is set, the force driving the penetrating member is varied during advancement and retraction to follow the profile. The method of lancing using the lancing device comprises selecting a profile, lancing according to the selected profile, determining lancing profile traits for each characteristic phase of the lancing cycle, and optimizing profile traits for subsequent lancing events.

FIG. **4** illustrates an embodiment of a tissue penetration device, more specifically, a lancing device **80** that includes a controllable driver **179** coupled to a tissue penetration element. The lancing device **80** has a proximal end **81** and a distal end **82**. At the distal end **82** is the tissue penetration element in the form of a penetrating member **83**, which is coupled to an elongate coupler shaft **84** by a drive coupler **85**. The elongate coupler shaft **84** has a proximal end **86** and a distal end **87**. A driver coil pack **88** is disposed about the elongate coupler shaft **84** proximal of the penetrating member **83**. A position sensor **91** is disposed about a proximal portion **92** of the elongate coupler shaft **84** and an electrical conductor **94** electrically couples a processor **93** to the position sensor **91**. The elongate coupler shaft **84** driven by the driver coil pack **88** controlled by the position sensor **91** and processor **93** form the controllable driver, specifically, a controllable electromagnetic driver.

Referring to FIG. **5**, the lancing device **80** can be seen in more detail, in partial longitudinal section. The penetrating member **83** has a proximal end **95** and a distal end **96** with a sharpened point at the distal end **96** of the penetrating member **83** and a drive head **98** disposed at the proximal end **95** of the penetrating member **83**. A penetrating member shaft **201** is disposed between the drive head **98** and the sharpened point **97**. The penetrating member shaft **201** may be comprised of stainless steel, or any other suitable material or alloy and have a transverse dimension of about 0.1 to about 0.4 mm. The penetrating member shaft may have a length of about 3 mm to about 50 mm, specifically, about 15 mm to about 20 mm. The drive head **98** of the penetrating member **83** is an enlarged portion having a transverse dimension greater than a transverse dimension of the penetrating member shaft **201** distal of the drive head **98**. This configuration allows the drive head **98** to be mechanically captured by the drive coupler **85**. The drive head **98** may have a transverse dimension of about 0.5 to about 2 mm.

A magnetic member **102** is secured to the elongate coupler shaft **84** proximal of the drive coupler **85** on a distal portion **203** of the elongate coupler shaft **84**. The magnetic member **102** is a substantially cylindrical piece of magnetic material having an axial lumen **204** extending the length of the magnetic member **102**. The magnetic member **102** has an outer transverse dimension that allows the magnetic member **102** to slide easily within an axial lumen **105** of a low friction, possibly lubricious, polymer guide tube **105'** disposed within the driver coil pack **88**. The magnetic member **102** may have an outer transverse dimension of about 1.0 to about 5.0 mm, specifically, about 2.3 to about 2.5 mm. The magnetic member **102** may have a length of about 3.0 to about 5.0 mm, specifically, about 4.7 to about 4.9 mm. The magnetic member **102** can be made from a variety of magnetic materials including ferrous metals such as ferrous steel, iron, ferrite, or the like. The magnetic member **102** may be secured to the distal portion **203** of the elongate coupler shaft **84** by a variety of methods including adhesive or epoxy bonding, welding, crimping or any other suitable method.

Proximal of the magnetic member **102**, an optical encoder flag **206** is secured to the elongate coupler shaft **84**. The optical encoder flag **206** is configured to move within a slot **107** in the position sensor **91**. The slot **107** of the position sensor **91** is formed between a first body portion **108** and a second body portion **109** of the position sensor **91**. The slot **107** may have separation width of about 1.5 to about 2.0 mm. The optical encoder flag **206** can have a length of about 14 to about 18 mm, a width of about 3 to about 5 mm and a thickness of about 0.04 to about 0.06 mm.

The optical encoder flag **206** interacts with various optical beams generated by LEDs disposed on or in the position sensor body portions **108** and **109** in a predetermined manner. The interaction of the optical beams generated by the LEDs of the position sensor **91** generates a signal that indicates the longitudinal position of the optical flag **206** relative to the position sensor **91** with a substantially high degree of resolution. The resolution of the position sensor **91** may be about 200 to about 400 cycles per inch, specifically, about 350 to about 370 cycles per inch. The position sensor **91** may have a speed response time (position/time resolution) of 0 to about 120,000 Hz, where one dark and light stripe of the flag constitutes one Hertz, or cycle per second. The position of the optical encoder flag **206** relative to the magnetic member **102**, driver coil pack **88** and position sensor **91** is such that the optical encoder **91** can provide precise positional information about the penetrating member **83** over the entire length of the penetrating member's power stroke.

An optical encoder that is suitable for the position sensor **91** is a linear optical incremental encoder, model HEDS 9200, manufactured by Agilent Technologies. The model HEDS 9200 may have a length of about 20 to about 30 mm, a width of about 8 to about 12 mm, and a height of about 9 to about 11 mm. Although the position sensor **91** illustrated is a linear optical incremental encoder, other suitable position sensor embodiments could be used, provided they posses the requisite positional resolution and time response. The HEDS 9200 is a two channel device where the channels are 90 degrees out of phase with each other. This results in a resolution of four times the basic cycle of the flag. These quadrature outputs make it possible for the processor to determine the direction of penetrating member travel. Other suitable position sensors include capacitive encoders, analog reflective sensors, such as the reflective position sensor discussed above, and the like.

A coupler shaft guide **111** is disposed towards the proximal end **81** of the lancing device **80**. The guide **111** has a guide lumen **112** disposed in the guide **111** to slidingly accept the proximal portion **92** of the elongate coupler shaft

84. The guide **111** keeps the elongate coupler shaft **84** centered horizontally and vertically in the slot **102** of the optical encoder **91**.

The driver coil pack **88**, position sensor **91** and coupler shaft guide **111** are all secured to a base **113**. The base **113** is longitudinally coextensive with the driver coil pack **88**, position sensor **91** and coupler shaft guide **111**. The base **113** can take the form of a rectangular piece of metal or polymer, or may be a more elaborate housing with recesses, which are configured to accept the various components of the lancing device **80**.

As discussed above, the magnetic member **102** is configured to slide within an axial lumen **105** of the driver coil pack **88**. The driver coil pack **88** includes a most distal first coil **114**, a second coil **115**, which is axially disposed between the first coil **114** and a third coil **116**, and a proximal-most fourth coil **117**. Each of the first coil **114**, second coil **115**, third coil **116** and fourth coil **117** has an axial lumen. The axial lumens of the first through fourth coils are configured to be coaxial with the axial lumens of the other coils and together form the axial lumen **105** of the driver coil pack **88** as a whole. Axially adjacent each of the coils **114-117** is a magnetic disk or washer **118** that augments completion of the magnetic circuit of the coils **114-117** during a lancing cycle of the device **80**. The magnetic washers **118** of the embodiment of FIG. **5** are made of ferrous steel but could be made of any other suitable magnetic material, such as iron or ferrite. The outer shell **89** of the driver coil pack **88** is also made of iron or steel to complete the magnetic path around the coils and between the washers **118**. The magnetic washers **118** have an outer diameter commensurate with an outer diameter of the driver coil pack **88** of about 4.0 to about 8.0 mm. The magnetic washers **118** have an axial thickness of about 0.05, to about 0.4 mm, specifically, about 0.15 to about 0.25 mm.

Wrapping or winding an elongate electrical conductor **121** about an axial lumen until a sufficient number of windings have been achieved forms the coils **114-117**. The elongate electrical conductor **121** is generally an insulated solid copper wire with a small outer transverse dimension of about 0.06 mm to about 0.88 mm, specifically, about 0.3 mm to about 0.5 mm. In one embodiment, 32 gauge copper wire is used for the coils **114-117**. The number of windings for each of the coils **114-117** of the driver pack **88** may vary with the size of the coil, but for some embodiments each coil **114-117** may have about 30 to about 80 turns, specifically, about 50 to about 60 turns. Each coil **114-117** can have an axial length of about 1.0 to about 3.0 mm, specifically, about 1.8 to about 2.0 mm. Each coil **114-117** can have an outer transverse dimension or diameter of about 4.0, to about 2.0 mm, specifically, about 9.0 to about 12.0 mm. The axial lumen **105** can have a transverse dimension of about 1.0 to about 3.0 mm.

It may be advantageous in some driver coil **88** embodiments to replace one or more of the coils with permanent magnets, which produce a magnetic field similar to that of the coils when the coils are activated. In particular, it may be desirable in some embodiments to replace the second coil **115**, the third coil **116** or both with permanent magnets. In addition, it may be advantageous to position a permanent magnet at or near the proximal end of the coil driver pack in order to provide fixed magnet zeroing function for the magnetic member (Adams magnetic Products 23A0002 flexible magnet material (800) 747-7543).

A permanent bar magnet **119** disposed on the proximal end of the driver coil pack **88**. As shown in FIG. **5**, the bar magnet **119** is arranged so as to have one end disposed adjacent the travel path of the magnetic member **102** and has a polarity configured so as to attract the magnetic member **102** in a centered position with respect to the bar magnet **119**. Note that the polymer guide tube **105'** can be configured to extend proximally to insulate the inward radial surface of the bar magnet **119** from an outer surface of the magnetic member **102**. This arrangement allows the magnetic member **119** and thus the elongate coupler shaft **84** to be attracted to and held in a zero point or rest position without the consumption of electrical energy from the power supply **125**.

Having a fixed zero or start point for the elongate coupler shaft **84** and penetrating member **83** may be useful to properly controlling the depth of penetration of the penetrating member **83** as well as other lancing parameters. This can be because some methods of depth penetration control for a controllable driver measure the acceleration and displacement of the elongate coupler shaft **84** and penetrating member **83** from a known start position. If the distance of the penetrating member tip **96** from the target tissue is known, acceleration and displacement of the penetrating member is known and the start position of the penetrating member is know, the time and position of tissue contact and depth of penetration can be determined by the processor **93**.

Any number of configurations for a magnetic bar **119** can be used for the purposes discussed above. In particular, a second permanent bar magnet (not shown) could be added to the proximal end of the driver coil pack **88** with the magnetic fields of the two bar magnets configured to complement each other. In addition, a disc magnet could be used as illustrated in FIG. **23**(*a*). The disc magnet is shown disposed at the proximal end of the driver coiled pack **88** with a polymer non-magnetic disc disposed between the proximal-most coil **117** and disc magnet and positions disc magnet away from the proximal end of the proximal-most coil **117**. The polymer non-magnetic disc spacer is used so that the magnetic member **102** can be centered in a zero or start position slightly proximal of the proximal-most coil **117** of the driver coil pack **88**. This allows the magnetic member to be attracted by the proximal-most coil **117** at the initiation of the lancing cycle instead of being passive in the forward drive portion of the lancing cycle.

An inner lumen of the polymer non-magnetic disc can be configured to allow the magnetic member **102** to pass axially there through while an inner lumen of the disc magnet can be configured to allow the elongate coupler shaft **84** to pass through but not large enough for the magnetic member **102** to pass through. This results in the magnetic member **102** being attracted to the disc magnet and coming to rest with the proximal surface of the magnetic member **102** against a distal surface of the disc magnet. This arrangement provides for a positive and repeatable stop for the magnetic member, and hence the penetrating member.

Typically, when the electrical current in the coils **114-117** of the driver coil pack **88** is off, a magnetic member **102** made of soft iron is attracted to the bar magnet **119** or the disc magnet. The magnetic field of the driver coil pack **88** and the bar magnet **119** or the disc magnet, or any other suitable magnet, can be configured such that when the electrical current in the coils **114-117** is turned on, the leakage magnetic field from the coils **114-117** has the same polarity as the bar magnet **119** or the disc magnet. This results in a magnetic force that repels the magnetic member **102** from the bar magnet **119** or disc magnet and attracts the magnetic member **102** to the activated coils **114-117**. For this configuration, the bar magnet **119** or disc magnet thus act to facilitate acceleration of the magnetic member **102** as opposed to working against the acceleration.

Electrical conductors **122** couple the driver coil pack **88** with the processor **93** which can be configured or programmed to control the current flow in the coils **114-117** of the driver coil pack **88** based on position feedback from the position sensor **91**, which is coupled to the processor **93** by electrical conductors **94**. A power source **125** is electrically coupled to the processor **93** and provides electrical power to operate the processor **93** and power the coil driver pack **88**. The power source **125** may be one or more batteries that provide direct current power to the **93** processor.

Referring to FIGS. **29**A-**29**C, a flow diagram is shown that describes the operations performed by the processor **93** in controlling the penetrating member **83** of the lancing device **80** discussed above during an operating cycle. FIGS. **30-36** illustrate the interaction of the penetrating member **83** and skin **133** of the patient's finger **134** during an operation cycle of the penetrating member device **83**. The processor **93** operates under control of programming steps that are stored in an associated memory. When the programming steps are executed, the processor **93** performs operations as described herein. Thus, the programming steps implement the functionality of the operations described with respect to the flow diagram of FIG. **29**. The processor **93** can receive the programming steps from a program product stored in recordable media, including a direct access program product storage device such as a hard drive or flash ROM, a removable program product storage device such as a floppy disk, or in any other manner known to those of skill in the art. The processor **93** can also download the programming steps through a network connection or serial connection.

In the first operation, represented by the flow diagram box numbered **245** in FIG. **6**A, the processor **93** initializes values that it stores in memory relating to control of the penetrating member, such as variables that it uses to keep track of the controllable driver **179** during movement. For example, the processor may set a clock value to zero and a penetrating member position value to zero or to some other initial value. The processor **93** may also cause power to be removed from the coil pack **88** for a period of time, such as for about 10 ms, to allow any residual flux to dissipate from the coils.

In the initialization operation, the processor **93** also causes the penetrating member to assume an initial stationary position. When in the initial stationary position, the penetrating member **83** is typically fully retracted such that the magnetic member **102** is positioned substantially adjacent the fourth coil **117** of the driver coil pack **88**, shown in FIG. **5** above. The processor **93** can move the penetrating member **83** to the initial stationary position by pulsing an electrical current to the fourth coil **117** to thereby attract the magnetic member **102** on the penetrating member **83** to the fourth coil **117**. Alternatively, the magnetic member can be positioned in the initial stationary position by virtue of a permanent magnet, such as bar magnet **119**, the disc magnet or any other suitable magnet as discussed above with regard to the tissue penetration device illustrated in FIGS. **20** and **21**.

In the next operation, represented by the flow diagram box numbered **247**, the processor **93** energizes one or more of the coils in the coil pack **88**. This should cause the penetrating member **83** to begin to move (i.e., achieve a non-zero speed) toward the skin target **133**. The processor **93** then determines whether or not the penetrating member is indeed moving. The processor **93** can determine whether the penetrating member **83** is moving by monitoring the position of the penetrating member **83** to determine whether the position changes over time. The processor **93** can monitor the position of the penetrating member **83** by keeping track of the position of the optical encoder flag **106** secured to the elongate coupler shaft **84** wherein the encoder **91** produces a signal coupled to the processor **93** that indicates the spatial position of the penetrating member **83**.

If the processor **93** determines (via timeout without motion events) that the penetrating member **83** is not moving (a "No" result from the decision box), then the process proceeds to the operation, where the processor deems that an error condition is present. This means that some error in the system is causing the penetrating member **83** not to move. The error may be mechanical, electrical, or software related. For example, the penetrating member **83** may be stuck in the stationary position because something is impeding its movement.

If the processor **93** determines that the penetrating member **83** is indeed moving (a "Yes" result from the decision box numbered **249**), then the process proceeds to the operation represented by the flow diagram box numbered **257**. In this operation, the processor **93** causes the penetrating member **83** to continue to accelerate and launch toward the skin target **133**, as indicated by the arrow **135** in FIG. **7**. The processor **93** can achieve acceleration of the penetrating member **83** by sending an electrical current to an appropriate coil **114-117** such that the coil **114-117** exerts an attractive magnetic launching force on the magnetic member **102** and causes the magnetic member **102** and the penetrating member **83** coupled thereto to move in a desired direction. For example, the processor **93** can cause an electrical current to be sent to the third coil **116** so that the third coil **116** attracts the magnetic member **102** and causes the magnetic member **102** to move from a position adjacent the fourth coil **117** toward the third coil **116**. The processor preferably determines which coil **114-117** should be used to attract the magnetic member **102** based on the position of the magnetic member **102** relative to the coils **114-117**. In this manner, the processor **93** provides a controlled force to the penetrating member that controls the movement of the penetrating member.

During this operation, the processor **93** periodically or continually monitors the position and/or velocity of the penetrating member **83**. In keeping track of the velocity and position of the penetrating member **83** as the penetrating member **83** moves towards the patient's skin **133** or other tissue, the processor **93** also monitors and adjusts the electrical current to the coils **114-117**. In some embodiments, the processor **93** applies current to an appropriate coil **114-117** such that the penetrating member **83** continues to move according to a desired direction and acceleration. In the instant case, the processor **93** applies current to the appropriate coil **114-117** that will cause the penetrating member **83** to continue to move in the direction of the patient's skin **133** or other tissue to be penetrated.

The processor **93** may successively transition the current between coils **114-117** so that as the magnetic member **102** moves past a particular coil **114-117**, the processor **93** then shuts off current to that coil **114-117** and then applies current to another coil **114-117** that will attract the magnetic member **102** and cause the magnetic member **102** to continue to move in the desired direction. In transitioning current between the coils **114-117**, the processor **93** can take into account various factors, including the speed of the penetrating member **83**, the position of the penetrating member **83** relative to the coils **114-117**, the number of coils **114-117**, and the level of current to be applied to the coils **114-117** to achieve a desired speed or acceleration.

In the next operation, the processor **93** determines whether the cutting or distal end tip **96** of the penetrating

member **83** has contacted the patient's skin **133**, as shown in FIG. **8** and as represented in FIG. **6**B. The processor **93** may determine whether the penetrating member **83** has made contact with the target tissue **133** by a variety of methods, including some that rely on parameters which are measured prior to initiation of a lancing cycle and other methods that are adaptable to use during a lancing cycle without any predetermined parameters.

In one embodiment, the processor **93** determines that the skin has been contacted when the end tip **96** of the penetrating member **83** has moved a predetermined distance with respect to its initial position. If the distance from the tip **261** of the penetrating member **83** to the target tissue **133** is known prior to initiation of penetrating member **83** movement, the initial position of the penetrating member **83** is fixed and known, and the movement and position of the penetrating member **83** can be accurately measured during a lancing cycle, then the position and time of penetrating member contact can be determined.

This method requires an accurate measurement of the distance between the penetrating member tip **96** and the patient's skin **133** when the penetrating member **83** is in the zero time or initial position. This can be accomplished in a number of ways. One way is to control all of the mechanical parameters that influence the distance from the penetrating member tip **96** to the patient's tissue or a surface of the lancing device **80** that will contact the patient's skin **133**. This could include the start position of the magnetic member **102**, magnetic path tolerance, magnetic member **102** dimensions, driver coil pack **88** location within the lancing device **80** as a whole, length of the elongate coupling shaft **84**, placement of the magnetic member **102** on the elongate coupling shaft **84**, length of the penetrating member **83** etc.

If all these parameters, as well as others can be suitably controlled in manufacturing with a tolerance stack-up that is acceptable, then the distance from the penetrating member tip **96** to the target tissue **133** can be determined at the time of manufacture of the lancing device **80**. The distance could then be programmed into the memory of the processor **93**. If an adjustable feature is added to the lancing device **80**, such as an adjustable length elongate coupling shaft **84**, this can accommodate variations in all of the parameters noted above, except length of the penetrating member **83**. An electronic alternative to this mechanical approach would be to calibrate a stored memory contact point into the memory of the processor **93** during manufacture based on the mechanical parameters described above.

In another embodiment, moving the penetrating member tip **96** to the target tissue **133** very slowly and gently touching the skin **133** prior to actuation can accomplish the distance from the penetrating member tip **96** to the tissue **133**. The position sensor can accurately measure the distance from the initialization point to the point of contact, where the resistance to advancement of the penetrating member **83** stops the penetrating member movement. The penetrating member **83** is then retracted to the initialization point having measured the distance to the target tissue **133** without creating any discomfort to the user.

In another embodiment, the processor **93** may use software to determine whether the penetrating member **83** has made contact with the patient's skin **133** by measuring for a sudden reduction in velocity of the penetrating member **83** due to friction or resistance imposed on the penetrating member **83** by the patient's skin **133**. The optical encoder **91** measures displacement of the penetrating member **83**. The position output data provides input to the interrupt input of the processor **93**. The processor **93** also has a timer capable of measuring the time between interrupts. The distance between interrupts is known for the optical encoder **91**, so the velocity of the penetrating member **83** can be calculated by dividing the distance between interrupts by the time between the interrupts.

This method requires that velocity losses to the penetrating member **83** and elongate coupler **84** assembly due to friction are known to an acceptable level so that these velocity losses and resulting deceleration can be accounted for when establishing a deceleration threshold above which contact between penetrating member tip **96** and target tissue **133** will be presumed. This same concept can be implemented in many ways. For example, rather than monitoring the velocity of the penetrating member **83**, if the processor **93** is controlling the penetrating member driver in order to maintain a fixed velocity, the power to the driver **88** could be monitored. If an amount of power above a predetermined threshold is required in order to maintain a constant velocity, then contact between the tip of the penetrating member **96** and the skin **133** could be presumed.

In yet another embodiment, the processor **93** determines skin **133** contact by the penetrating member **83** by detection of an acoustic signal produced by the tip **96** of the penetrating member **83** as it strikes the patient's skin **133**. Detection of the acoustic signal can be measured by an acoustic detector **136** placed in contact with the patient's skin **133** adjacent a penetrating member penetration site **137**, as shown in FIG. **8**. Suitable acoustic detectors **136** include piezo electric transducers, microphones and the like. The acoustic detector **136** transmits an electrical signal generated by the acoustic signal to the processor **93** via electrical conductors **138**. In another embodiment, contact of the penetrating member **83** with the patient's skin **133** can be determined by measurement of electrical continuity in a circuit that includes the penetrating member **83**, the patient's finger **134** and an electrical contact pad **240** that is disposed on the patient's skin **133** adjacent the contact site **137** of the penetrating member **83**, as shown in FIG. **8**. In this embodiment, as soon as the penetrating member **83** contacts the patient's skin **133**, the circuit **139** is completed and current flows through the circuit **139**. Completion of the circuit **139** can then be detected by the processor **93** to confirm skin **133** contact by the penetrating member **83**.

If the penetrating member **83** has not contacted the target skin **133**, then the process proceeds to a timeout operation, as represented in FIG. **6**B. In the timeout operation, the processor **93** waits a predetermined time period. If the timeout period has not yet elapsed, then the processor continues to monitor whether the penetrating member has contacted the target skin **133**. The processor **93** preferably continues to monitor the position and speed of the penetrating member **83**, as well as the electrical current to the appropriate coil **114-117** to maintain the desired penetrating member **83** movement.

If the timeout period elapses without the penetrating member **83** contacting the skin, then it is deemed that the penetrating member **83** will not contact the skin and the process proceeds to a withdraw phase, where the penetrating member is withdrawn away from the skin **133**, as discussed more fully below. The penetrating member **83** may not have contacted the target skin **133** for a variety of reasons, such as if the patient removed the skin **133** from the lancing device or if something obstructed the penetrating member **83** prior to it contacting the skin.

The processor **93** may also proceed to the withdraw phase prior to skin contact for other reasons. For example, at some point after initiation of movement of the penetrating member

83, the processor 93 may determine that the forward acceleration of the penetrating member 83 towards the patient's skin 133 should be stopped or that current to all coils 114-117 should be shut down. This can occur, for example, if it is determined that the penetrating member 83 has achieved sufficient forward velocity, but has not yet contacted the skin 133. In one embodiment, the average penetration velocity of the penetrating member 83 from the point of contact with the skin to the point of maximum penetration may be about 2.0 to about 10.0 m/s, specifically, about 3.8 to about 4.2 m/s. In another embodiment, the average penetration velocity of the penetrating member may be from about 2 to about 8 meters per second, specifically, about 2 to about 4 m/s.

The processor 93 can also proceed to the withdraw phase if it is determined that the penetrating member 83 has fully extended to the end of the power stroke of the operation cycle of lancing procedure. In other words, the process may proceed to withdraw phase when an axial center 141 of the magnetic member 102 has moved distal of an axial center 142 of the first coil 114 as show in FIG. 5. In this situation, any continued power to any of the coils 114-117 of the driver coil pack 88 serves to decelerate the magnetic member 102 and thus the penetrating member 83. In this regard, the processor 93 considers the length of the penetrating member 83 (which can be stored in memory) the position of the penetrating member 83 relative to the magnetic member 102, as well as the distance that the penetrating member 83 has traveled.

With reference again to FIG. 6B, if the processor 93 determines that the penetrating member 83 has contacted the skin 133, then the processor 93 can adjust the speed of the penetrating member 83 or the power delivered to the penetrating member 83 for skin penetration to overcome any frictional forces on the penetrating member 83 in order to maintain a desired penetration velocity of the penetrating member.

As the velocity of the penetrating member 83 is maintained after contact with the skin 133, the distal tip 96 of the penetrating member 83 will first begin to depress or tent the contacted skin 137 and the skin 133 adjacent the penetrating member 83 to form a tented portion 243 as shown in FIG. 9 and further shown in FIG. 10. As the penetrating member 83 continues to move in a distal direction or be driven in a distal direction against the patient's skin 133, the penetrating member 83 will eventually begin to penetrate the skin 133, as shown in FIG. 11. Once penetration of the skin 133 begins, the static force at the distal tip 96 of the penetrating member 83 from the skin 133 will become a dynamic cutting force, which is generally less than the static tip force. As a result in the reduction of force on the distal tip 96 of the penetrating member 83 upon initiation of cutting, the tented portion 243 of the skin 133 adjacent the distal tip 96 of the penetrating member 83 which had been depressed as shown in FIGS. 32 and 24 will spring back as shown in FIG. 11.

In the next operation, represented by the decision box numbered 171 in FIG. 6B, the processor 93 determines whether the distal end 96 of the penetrating member 83 has reached a brake depth. The brake depth is the skin penetration depth for which the processor 93 determines that deceleration of the penetrating member 83 is to be initiated in order to achieve a desired final penetration depth 144 of the penetrating member 83 as show in FIG. 12. The brake depth may be pre-determined and programmed into the processor's memory, or the processor 93 may dynamically determine the brake depth during the actuation. The amount of penetration of the penetrating member 83 in the skin 133 of the patient may be measured during the operation cycle of the penetrating member device 80. In addition, as discussed above, the penetration depth suitable for successfully obtaining a useable sample can depend on the amount of tenting of the skin 133 during the lancing cycle. The amount of tenting of the patient's skin 133 can in turn depend on the tissue characteristics of the patient such as elasticity, hydration etc. A method for determining these characteristics is discussed below with regard to skin 133 tenting measurements during the lancing cycle and illustrated in FIGS. 37-41.

Penetration measurement can be carried out by a variety of methods that are not dependent on measurement of tenting of the patient's skin. In one embodiment, the penetration depth of the penetrating member 83 in the patient's skin 133 is measured by monitoring the amount of capacitance between the penetrating member 83 and the patient's skin 133. In this embodiment, a circuit includes the penetrating member 83, the patient's finger 134, the processor 93 and electrical conductors connecting these elements. As the penetrating member 83 penetrates the patient's skin 133, the greater the amount of penetration, the greater the surface contact area between the penetrating member 83 and the patient's skin 133. As the contact area increases, so does the capacitance between the skin 133 and the penetrating member 83. The increased capacitance can be easily measured by the processor 93 using methods known in the art and penetration depth can then be correlated to the amount of capacitance. The same method can be used by measuring the electrical resistance between the penetrating member 83 and the patient's skin.

If the brake depth has not yet been reached, then a "No" results from the decision box 171 and the process proceeds to the timeout operation represented by the flow diagram box numbered 173. In the timeout operation, the processor 93 waits a predetermined time period. If the timeout period has not yet elapsed (a "No" outcome from the decision box 173), then the processor continues to monitor whether the brake depth has been reached. If the timeout period elapses without the penetrating member 83 achieving the brake depth (a "Yes" output from the decision box 173), then the processor 93 deems that the penetrating member 83 will not reach the brake depth and the process proceeds to the withdraw phase, which is discussed more fully below. This may occur, for example, if the penetrating member 83 is stuck at a certain depth.

With reference again to the decision box numbered 171 in FIG. 6B, if the penetrating member does reach the brake depth (a "Yes" result), then the process proceeds to the operation represented by the flow diagram box numbered 275. In this operation, the processor 93 causes a braking force to be applied to the penetrating member to thereby reduce the speed of the penetrating member 83 to achieve a desired amount of final skin penetration depth 144, as shown in FIG. 26. Note that FIGS. 32 and 33 illustrate the penetrating member making contact with the patient's skin and deforming or depressing the skin prior to any substantial penetration of the skin. The speed of the penetrating member 83 is preferably reduced to a value below a desired threshold and is ultimately reduced to zero. The processor 93 can reduce the speed of the penetrating member 83 by causing a current to be sent to a 114-117 coil that will exert an attractive braking force on the magnetic member 102 in a proximal direction away from the patient's tissue or skin 133, as indicated by the arrow 190 in FIG. 13. Such a negative force reduces the forward or distally oriented speed of the penetrating member 83. The processor 93 can determine which coil 114-117 to energize based upon the position

of the magnetic member **102** with respect to the coils **114-117** of the driver coil pack **88**, as indicated by the position sensor **91**.

In the next operation, the process proceeds to the withdraw phase, as represented by the flow diagram box numbered **177**. The withdraw phase begins with the operation represented by the flow diagram box numbered **178** in FIG. **6**C. Here, the processor **93** allows the penetrating member **83** to settle at a position of maximum skin penetration **144**, as shown in FIG. **12**. In this regard, the processor **93** waits until any motion in the penetrating member **83** (due to vibration from impact and spring energy stored in the skin, etc.) has stopped by monitoring changes in position of the penetrating member **83**. The processor **93** preferably waits until several milliseconds (ms), such as on the order of about 8 ms, have passed with no changes in position of the penetrating member **83**. This is an indication that movement of the penetrating member **83** has ceased entirely. In some embodiments, the penetrating member may be allowed to settle for about 1 to about 2000 milliseconds, specifically, about 50 to about 200 milliseconds. For other embodiments, the settling time may be about 1 to about 200 milliseconds.

It is at this stage of the lancing cycle that a software method can be used to measure the amount of tenting of the patient's skin **133** and thus determine the skin **133** characteristics such as elasticity, hydration and others. Referring to FIGS. **37-41**, a penetrating member **83** is illustrated in various phases of a lancing cycle with target tissue **133**. FIG. **14** shows tip **96** of penetrating member **83** making initial contact with the skin **133** at the point of initial impact.

FIG. **15** illustrates an enlarged view of the penetrating member **83** making initial contact with the tissue **133** shown in FIG. **14**. In FIG. **16**, the penetrating member tip **96** has depressed or tented the skin **133** prior to penetration over a distance of X, as indicated by the arrow labeled X in FIG. **16**. In FIG. **17**, the penetrating member **83** has reached the full length of the cutting power stroke and is at maximum displacement. In this position, the penetrating member tip **96** has penetrated the tissue **133** a distance of Y, as indicated by the arrow labeled Y in FIG. **16**. As can be seen from comparing FIG. **15** with FIG. **17**, the penetrating member tip **96** was displaced a total distance of X plus Y from the time initial contact with the skin **133** was made to the time the penetrating member tip **96** reached its maximum extension as shown in FIG. **17**. However, the penetrating member tip **96** has only penetrated the skin **133** a distance Y because of the tenting phenomenon.

At the end of the power stroke of the penetrating member **83**, as discussed above with regard to box **179** of FIG. **6**C, the processor **93** allows the penetrating member to settle for about 8 msec. It is during this settling time that the skin **133** rebounds or relaxes back to approximately its original configuration prior to contact by the penetrating member **83** as shown in FIG. **18**. The penetrating member tip **96** is still buried in the skin to a depth of Y, as shown in FIG. **18**, however the elastic recoil of the tissue has displaced the penetrating member rearward or retrograde to the point of inelastic tenting that is indicated by the arrows Z in FIG. **18**. During the rearward displacement of the penetrating member **83** due to the elastic tenting of the tissue **133**, the processor reads and stores the position data generated by the position sensor **91** and thus measures the amount of elastic tenting, which is the difference between X and Z.

Referring to FIG. **19**, a tissue penetration sampling device **80** is shown with the controllable driver **179** of FIG. **4** coupled to a sampling module cartridge **205** and disposed within a driver housing **206**. A ratchet drive mechanism **207** is secured to the driver housing **206**, coupled to the sampling module cartridge **205** and configured to advance a sampling module belt **208** within the sampling module cartridge **205** so as to allow sequential use of each sampling module **209** in the sampling module belt **208**. The ratchet drive mechanism **207** has a drive wheel **211** configured to engage the sampling modules **209** of the sampling module belt **208**. The drive wheel **211** is coupled to an actuation lever **212** that advances the drive wheel **211** in increments of the width of a single sampling module **209**. A T-slot drive coupler **213** is secured to the elongated coupler shaft **84**.

A sampling module **209** is loaded and ready for use with the drive head **98** of the penetrating member **83** of the sampling module **209** loaded in the T-slot **214** of the drive coupler **213**. A sampling site **215** is disposed at the distal end **216** of the sampling module **209** disposed about a penetrating member exit port **217**. The distal end **216** of the sampling module **209** is exposed in a module window **218**, which is an opening in a cartridge cover **221** of the sampling module cartridge **205**. This allows the distal end **216** of the sampling module **209** loaded for use to be exposed to avoid contamination of the cartridge cover **221** with blood from the lancing process.

A reader module **222** is disposed over a distal portion of the sampling module **209** that is loaded in the drive coupler **213** for use and has two contact brushes **224** that are configured to align and make electrical contact with analyte detecting member contacts **225** of the sampling module **209** as shown in FIG. **77**. With electrical contact between the analyte detecting member contacts **225** and contact brushes **224**, the processor **93** of the controllable driver **179** can read a signal from an analytical region **226** of the sampling module **209** after a lancing cycle is complete and a blood sample enters the analytical region **226** of the sampling module **209**. The contact brushes **224** can have any suitable configuration that will allow the sampling module belt **208** to pass laterally beneath the contact brushes **224** and reliably make electrical contact with the sampling module **209** loaded in the drive coupler **213** and ready for use. A spring loaded conductive ball bearing is one example of a contact brush **224** that could be used. A resilient conductive strip shaped to press against the inside surface of the flexible polymer sheet **227** along the analyte detecting member region **228** of the sampling module **209** is another embodiment of a contact brush **224**.

The sampling module cartridge **205** has a supply canister **229** and a receptacle canister **230**. The unused sampling modules of the sampling module belt **208** are disposed within the supply canister **229** and the sampling modules of the sampling module belt **208** that have been used are advanced serially after use into the receptacle canister **230**.

FIG. **20** illustrates a further embodiment of sampling module cartridges. FIG. **20** shows a sampling module cartridge **202** in a carousel configuration with adjacent sampling modules **204** connected rigidly and with analyte detecting members **206** from the analytical regions of the various sampling modules **204** disposed near an inner radius **208** of the carousel. The sampling modules **204** of the sampling module cartridge **202** are advanced through a drive coupler **213** but in a circular as opposed to a linear fashion.

FIG. **21** shows an exploded view in perspective of the cartridge **245**, which has a proximal end portion **254** and a distal end portion **255**. The penetrating member cartridge body **246** is disposed at the proximal end portion **254** of the cartridge **245** and has a plurality of penetrating member module portions **250**, such as the penetrating member module portion **250**. Each penetrating member module portion

250 has a penetrating member channel 251 with a penetrating member 83 slidably disposed within the penetrating member channel 251. The penetrating member channels 251 are substantially parallel to the longitudinal axis 252 of the penetrating member cartridge body 246. The penetrating members 83 shown have a drive head 98, shaft portion 201 and sharpened tip 96. The drive head 98 of the penetrating members are configured to couple to a drive coupler (not shown), such as the drive coupler 85 discussed above.

The penetrating members 83 are free to slide in the respective penetrating member channels 251 and are nominally disposed with the sharpened tip 96 withdrawn into the penetrating member channel 251 to protect the tip 96 and allow relative rotational motion between the penetrating member cartridge body 246 and the sampling cartridge body 247 as shown by arrow 256 and arrow 257 in FIG. 21. The radial center of each penetrating member channel 251 is disposed a fixed, known radial distance from the longitudinal axis 252 of the penetrating member cartridge body 246 and a longitudinal axis 258 of the cartridge 245. By disposing each penetrating member channel 251 a fixed known radial distance from the longitudinal axes 252 and 258 of the penetrating member cartridge body 246 and cartridge 245, the penetrating member channels 251 can then be readily and repeatably aligned in a functional arrangement with penetrating member channels 253 of the sampling cartridge body 247. The penetrating member cartridge body 246 rotates about a removable pivot shaft 259 which has a longitudinal axis 260 that is coaxial with the longitudinal axes 252 and 250 of the penetrating member cartridge body 246 and cartridge 245.

The sampling cartridge body 247 is disposed at the distal end portion 255 of the cartridge and has a plurality of sampling module portions 248 disposed radially about the longitudinal axis 249 of the sampling cartridge body 247. The longitudinal axis 249 of the sampling cartridge body 247 is coaxial with the longitudinal axes 252, 258 and 260 of the penetrating member cartridge body 246, cartridge 245 and pivot shaft 259. The sampling cartridge body 247 may also rotate about the pivot shaft 259. In order to achieve precise relative motion between the penetrating member cartridge body 246 and the sampling cartridge body 247, one or both of the cartridge bodies 246 and 247 may be rotatable about the pivot shaft 259, however, it is not necessary for both to be rotatable about the pivot shaft 259, that is, one of the cartridge bodies 246 and 247 may be secured, permanently or removably, to the pivot shaft 259.

The sampling cartridge body 247 includes a base 261 and a cover sheet 262 that covers a proximal surface 263 of the base forming a fluid tight seal. Each sampling module portion 248 of the sampling cartridge body 247, such as the sampling module portion 248, has a sample reservoir 264 and a penetrating member channel 253. The sample reservoir 264 has a vent 965 at an outward radial end that allows the sample reservoir 264 to readily fill with a fluid sample. The sample reservoir 264 is in fluid communication with the respective penetrating member channel 253 which extends substantially parallel to the longitudinal axis 249 of the sampling cartridge body 247. The penetrating member channel 253 is disposed at the inward radial end of the sample reservoir 264. Still further description of the device of FIG. 21 may be found in commonly assigned, copending U.S. patent application Ser. No. 10/127,395 filed Apr. 19, 2002.

Referring to FIG. 22A, one embodiment of the present invention is a tissue penetrating system 310 with a plurality of penetrating members 312 that each have a tissue penetrating tip 314. The number of penetrating members 310 can vary, but numbers in the ranges of 10, 15, 25, 50, 75, 100, 500 or any other number, are suitable. Each penetrating member 312 can be a lancet, a traditional lancet with a molded body, a needle with a lumen, a knife like element, an elongate member without molded attachments, and the like, and may have a size in the range of 20 mm to 10 mm in length and between 0.012-0.040 mm in diameter. It should be understood of course that penetrating members of a variety of different sizes useful for lancing such as those of conventional lancets may be used in other embodiments. As seen in FIG. 22A, the penetrating member may have an elongate portion with a bend near a proximal end of the member.

Each penetrating member 312 is coupled to a penetrating member driver 316. Suitable penetrating member drivers 316 include but are not limited to, an electric drive force member, a voice coil drive force generator, a linear voice coil device, a rotary voice coil device, and the like. Suitable drive force generators can be found in commonly assigned, copending U.S. patent application Ser. No. 10/127,395 filed Apr. 19, 2002. In one embodiment, the penetrating member driver or drive force generator 316 may be a single actuator used to advance the penetrating member and to withdraw the member. The driver 316 may also be used to stop the penetrating member in the tissue site. Penetrating member driver 316 can be a non-spring actuator for drawing penetrating member 312 in a direction back towards penetrating member driver 316. A coupler 318 on penetrating member driver 316 is configured to engage at least a portion of an elongate portion of a penetrating member 312 in order to drive the penetrating member 312 along a path into and through target tissue 320, and then withdrawn from target tissue 320.

Referring now to FIG. 22B, the tips of the penetrating members 312 can be uncovered when they are launched into a selected target tissue 320. In one embodiment, sterility enclosures 322 are provided for covering at least the tip of each penetrating member 312. FIG. 22B shows that the enclosure may also cover the entire lancet. In one embodiment, each sterility enclosure 322 is removed from the penetrating member 312 prior to actuation, launch, of penetrating member 312 and positioned so that penetrating member 312 does not contact the associated sterility enclosure 322 during actuation. As seen in FIG. 22B, the enclosure 322 may be peel away to reveal the penetrating member 312 prior to coupling of the member 312 to the drive force generator 316. In another embodiment, each penetrating member 312 breaches its associated sterility enclosure 322 during launch.

Tissue penetrating system 310 can also include one or more penetrating member sensors 324 that are coupled to penetrating members 312. Examples of suitable penetrating member sensors 324 include but are not limited to, a capacitive incremental encoder, an incremental encoder, an optical encoder, an interference encoder, and the like. Each penetrating member sensor 324 is configured to provide information relative to a depth of penetration of a penetrating member 312 through a target tissue 320 surface, including but not limited to a skin surface, and the like. The penetrating member sensor 324 may be positioned as shown in FIG. 22B. The penetrating member sensor 324 may also be positioned in a variety of location such as but not limited to being closer to the distal end of the penetrating member, in a position as shown in FIG. 5, or in any other location useful for providing an indication of the position of a penetrating member 312 being driven by the force generator 316.

In various embodiments, the penetration depth of a penetrating member **312** through the surface of a target tissue **320** can be, 100 to 2500 microns, 500 to 750 microns, and the like. Each penetrating member sensor **324** can also provide an indication of velocity of a penetrating member **312**. Referring to FIG. **22**C, a damper **326** can be coupled to penetrating member driver **316**. Damper **326** prevents multiple oscillations of penetrating member **312** in target tissue **320**, particularly after penetrating member **312** has reached a desired depth of penetration. The damper **326** may be placed in a variety of positions such as but not limited to being coupled to the penetrating member, being coupled to the coupler **318**, being coupled to a core or shaft in the drive force generator **316**, or at any other position useful for slowing the motion of the penetrating member **312**.

A feedback loop **328** can also be included that is coupled to penetrating member sensor **324**. Each penetrating member **312** sensor can be coupled to a processor **330** that has control instructions for penetrating member driver **316**. By way of illustration, and without limitation, processor **330** can include a memory for storage and retrieval of a set of penetrating member **312** profiles utilized with penetrating member driver **316**. Processor **330** can also be utilized to monitor position and speed of a penetrating member **312** as it moves in first direction **332** to and through the target tissue **320**.

Processor **330** can adjust an application of force to a penetrating member **312** in order to achieve a desired speed of a penetrating member **312**. Additionally, processor **330** can also be used to adjust an application of force applied to a penetrating member **312** when penetrating member **312** contacts target tissue **320** so that penetrating member **312** penetrates target tissue **320** within a desired range of speed. Further, processor **330** can also monitor position and speed of a penetrating member **312** as penetrating member **312** moves in first direction **332** toward the target tissue **320**. Application of a launching force to penetrating member **312** can be controlled based on position and speed of penetrating member **312**. Processor **330** can control a withdraw force, from target tissue **320**, to penetrating member **312** so that penetrating member **312** moves in second direction **334** away from target tissue **320**.

Processor **330** can produce a signal that is indicative of a change in direction and magnitude of force exerted on penetrating member **312**. Additionally, processor **330** can cause a braking force to be applied to penetrating member **312**.

In one embodiment, in first direction **332** penetrating member **312** moves toward target tissue **320** at a speed that is different than a speed at which penetrating member **312** moves away from target tissue **320** in second direction **334**. In one embodiment, the speed of penetrating member **312** in first direction **332** is greater than the speed of penetrating member **312** in second direction **334**. The speed of penetrating member **312** in first direction **332** can be a variety of different ranges including but not limited to, 0.05 to 60 m/sec, 0.1 to 20.0 m/sec, 1.0 to 10.0 m/sec, 3.0 to 8.0 m/sec, and the like. Additionally, the dwell time of penetrating member **312** in target tissue **320**, below a surface of the skin or other structure, can be in the range of, 1 microsecond to 2 seconds, 500 milliseconds to 1.5 second, 100 milliseconds to 1 second, and the like.

As seen in FIGS. **22**A and **22**B, tissue penetrating system **310** can include a penetrating member transport device **336** for moving each of penetrating member **312** into a position for alignment with penetrating member driver **316**. Penetrating members **312** can be arranged in an array configuration by a number of different devices and structures defining support **338**, including but not limited to, a belt, a flexible or non-flexible tape device, support channel, cog, a plurality of connectors, and the like. Support **338** can have a plurality of openings each receiving a penetrating member **312**. Suitable supports **338** may also include but are not limited to, a bandolier, drum, disc and the like. A description of supports **338** can be found in commonly assigned, copending U.S. patent application Ser. No. 10/127,395 filed Apr. 19, 2002; commonly assigned, U.S. Provisional Patent Application Ser. No. 60/437,359 filed Dec. 31, 2002; and commonly assigned U.S. Provisional Patent Application Ser. No. 60/437,205 filed Dec. 31, 2002. All applications listed above are fully incorporated herein by reference for all purposes.

As illustrated in FIG. **22**(*a*), tissue penetrating system **310** can include a single penetrating member driver **316** and a plurality of penetrating members **312**. Penetrating member driver **316** moves each penetrating member **312** along a path out of a housing that has a penetrating member exit and then into target tissue **320**, stopping in target tissue **320**, and then withdrawing out of the target tissue **320**. Support **338** couples the penetrating members **312** to define a linear array. Support **338** is movable and configured to move each penetrating member **312** to a launch position associated with penetrating member driver **316**. Penetrating member driver **316** can be controlled to follow a predetermined velocity trajectory into and out of target tissue **320**.

Tissue penetrating system **310** can include a user interface **340** configured to relay different information, including but not limited to, skin penetrating performance, a skin penetrating setting, and the like. User interface **340** can provide a user with at a variety of different outputs, including but not limited to, penetration depth of a penetrating member **312**, velocity of a penetrating member **312**, a desired velocity profile, a velocity of penetrating member **312** into target tissue **320**, velocity of the penetrating member **312** out of target tissue **320**, dwell time of penetrating member **312** in target tissue **320**, a target tissue relaxation parameter, and the like. User interface **340** can include a variety of components including but not limited to, a real time clock **342**, one or more alarms **344** to provide a user with a reminder of a next target penetrating event is needed, a user interface processor **346**, and the like.

User interface **340** can provide a variety of different outputs to a user including but not limited to, number of penetrating members **312** available, number of penetrating members **312** used, actual depth of penetrating member **312** penetration on target tissue **320**, stratum corneum thickness in the case where the target tissue **320** is the skin and an area below the skin, force delivered on target tissue **320**, energy used by penetrating member driver **316** to drive penetrating member **312** into target tissue **320**, dwell time of penetrating member **312**, battery status of tissue penetrating system **310**, status of tissue penetrating system **310**, the amount of energy consumed by tissue penetrating system **310**, or any component of tissue penetrating system **310**, speed profile of penetrating member **312**, information relative to contact of penetrating member **312** with target tissue **320** before penetration by penetrating member **312**, information relative to a change of speed of penetrating member **312** as in travels in target tissue **320**, and the like.

User interface **340** can include a data interface **348** that couples tissue penetrating system **310** to support equipment **350** with an interface, the internet, and the like. The data interface **348** may also be coupled to the processor **93**. Suitable support equipment **350** includes but is not limited to, a base station, home computer, central server, main

processing equipment for storing analyte, such as glucose, level information, and the like.

Data interface **348** can be a variety of interfaces including but not limited to, Serial RS-232, modem interface, USB, HPNA, Ethernet, optical interface, IRDA, RF interface, Bluetooth interface, cellular telephone interface, two-way pager interface, parallel port interface standard, near field magnetic coupling, RF transceiver, telephone system, and the like.

User interface **340** be coupled to a memory **352** that stores, a target tissue parameter, target tissue **320** penetrating performance, and the like. The memory **352** may also be connected to processor **93** and store data from the user interface **340**.

In one embodiment, memory **352** can store, the number of target tissue penetrating events, time and date of the last selected number of target tissue penetrating events, time interval between alarm and target tissue penetrating event, stratum corneum thickness, time of day, energy consumed by penetrating member driver **316** to drive penetrating member **312** into target tissue **320**, depth of penetrating member **312** penetration, velocity of penetrating member **312**, a desired velocity profile, velocity of penetrating member **312** into target tissue **320**, velocity of penetrating member **312** out of target tissue **320**, dwell time of penetrating member **312** in target tissue **320**, a target tissue relaxation parameter, force delivered on target tissue **320** by any component of tissue penetrating device, dwell time of penetrating member **312**, battery status of tissue penetrating system **310**, tissue penetrating system **310** status, consumed energy by tissue penetrating system **310** or any of its components, speed profile of penetrating member **312** as it penetrates and advances through target tissue **320**, a tissue target tissue relaxation parameter, information relative to contact of penetrating member **312** with target tissue **320** before penetration by penetrating member **312**, information relative to a change of speed of penetrating member **312** as in travels in and through target tissue **320**, information relative to consumed analyte detecting members, and information relative to consumed penetrating members **312**.

In one embodiment, processor **330** is coupled to and receives any of a different type of signals from user interface **340**. User interface **340** can respond to a variety of different commands, including but not limited to audio commands, and the like. User interface **340** can include a sensor for detecting audio commands. Information can be relayed to a user of tissue penetrating system **310** by way of an audio device, wireless device, and the like.

In another embodiment as seen in FIG. **23**B, tissue penetrating device includes a human interface **354** with at least one output. The human interface **354** is specific for use by humans while a user interface **340** may be for any type of user, with user defined generically. Human interface **354** can be coupled to processor **330** and penetrating member sensor **324**. Human interface **354** can be a variety of different varieties including but not limited to, LED, LED digital display, LCD display, sound generator, buzzer, vibrating device, and the like.

The output of human interface **354** can be a variety of outputs including but not limited to, a penetration event by penetrating member **312**, number of penetrating members **312** remaining, time of day, alarm, penetrating member **312** trajectory waveform profile information, force of last penetration event, last penetration event, battery status of tissue penetrating system **310**, analyte status, time to change cassette status, jamming malfunction, tissue penetrating system **310** status, and the like.

Human interface **354** is coupled to a housing **356**. Suitable housings **356** include but are not limited to a, telephone, watch, PDA, electronic device, medical device, point of care device, decentralized diagnostic device and the like. An input device **358** is coupled to housing. Suitable input devices **358** include but are not limited to, one or more pushbuttons, a touch pad independent of the display device, a touch sensitive screen on a visual display, and the like.

A data exchange device **360** can be utilized for coupling tissue penetrating system **310** to support equipment **350** including but not limited to, personal computer, modem, PDA, computer network, and the like. Human interface **354** can include a real time clock **362**, and one or more alarms **364** that enable a user to set and use for reminders for the next target tissue penetration event. Human interface **354** can be coupled to a human interface processor **366** which is distinct from processor **330**. Human interface processor **366** can include a sleep mode and can run intermittently to conserve power. Human interface processor **366** includes logic that can provide an alarm time set for a first subset of days, and a second alarm time set for a second subset of days. By way of example, and without limitation, the first subset of days can be Monday through Friday, and the second subset of days can be Saturday and Sunday.

Human interface **354** can be coupled to a memory **368** for storing a variety of information, including but not limited to, the number of target tissue penetrating events, time and date of the last selected number of target tissue penetrating events, time interval between alarm and target tissue penetrating event, stratum corneum thickness when target tissue **320** is below the skin surface and underlying tissue, time of day, energy consumed by penetrating member driver **316** to drive penetrating member **312** into target tissue **320**, depth of penetrating member **312** penetration, velocity of penetrating member **312**, a desired velocity profile, velocity of penetrating member **312** into target tissue **320**, velocity of penetrating member **312** out of target tissue **320**, dwell time of penetrating member **312** in target tissue **320**, a target tissue relaxation parameter, force delivered on target tissue **320**, dwell time of penetrating member **312**, battery status of tissue penetrating system **310** and its components, tissue penetrating system **310** status, consumed energy, speed profile of penetrating member **312** as it advances through target tissue **320**, a target tissue relaxation parameter, information relative to contact of a penetrating member **312** with target tissue **320** before penetration by penetrating member **312**, information relative to a change of speed of penetrating member **312** as in travels in target tissue **320**, information relative to consumed sensors, information relative to consumed penetrating members **312**.

As illustrated in FIG. **24**, tissue penetrating system **310** can include a penetrating member driver **316** and a plurality of cartridges **370**. Each cartridge **370** contains a penetrating member **312**. The cartridges **370** can be coupled together in an array, which can be a flexible array. A cartridge transport device **372** moves cartridges **370** into a launch position that operatively couples a penetrating member **312** to penetrating member driver **316**. A support couples cartridges **370** to define an array. A plurality of sterility enclosures **322** can be provided to at least cover tips of penetrating members **312**. Sterility enclosure **322** (shown in phantom) is removed from their associated penetrating members **312** prior to launch of the penetrating member **312**. The enclosure may be peeled away (not shown) in a manner similar to that as seen in FIG. **22**B, with the enclosure **322** on one tape surface being peeled away. The enclosure **322** may be a blister sack, a sack tightly formed about each cartridge **370**, or other enclosure

useful for maintaining a sterile environment about the cartridge **370** prior to actuation or launch. The enclosure **322** may contain the entire cartridge **370** or some portion of the cartridge **370** which may need to remain sterile prior to launch. During launch, enclosure or sterility barrier **322** can be breached by a device other than penetrating member **312**, or can be breached by penetrating member **312** itself. An analyte detection member, sensor, may be positioned to receive fluid from a wound created by the penetrating member **312**. The member may be on the cartridge **370** or may be on the device **80**.

Referring to FIGS. **24** and **25**, one embodiment of tissue penetrating system **310** includes cartridge transport device **372** and a plurality of cartridges **370**. Each cartridge **370** is associated with a penetrating member **312**. Cartridge transport device **372** moves each cartridge **370** to a position to align the associated penetrating member **312** with penetrating member driver **316** to drive penetrating member **312** along a path into target tissue **320**. In one embodiment as seen in FIG. **25**, each cartridge **370** has at least one of a distal port **374** and a proximal port **376**. A first seal **378** is positioned at distal or proximal ports. As seen in FIG. **25**, the seal **378** may be placed at the distal port. First seal **378** is formed of a material that is fractured by penetrating member **312** before it is launched. A second seal **380** can be positioned at the other port. It will be appreciated that only one or both of distal and proximal ports **374** and **376** can be sealed, and that each cartridge **370** can include only one port **374** and **376**. For ease of illustration, the penetrating member **312** extending longitudinally through the lumen in the cartridge **370** is not shown. The seals **380** and **378** may be fracturable seals formed between the penetrating member and the cartridge **370**. During actuation, the seals **378** and **380** are broken. Seal **378** may be also be positioned to cover the distal port or exit port **374** without being sealed against the penetrating member (i.e. covering the port without touching the penetrating member). A third seal **381** may be positioned to cover an entrance to sample chamber **384**. The seal **381** may be configured to be broken when the penetrating member **312** is actuated. A still further seal **381**A may be placed in the lumen. The tip of a penetrating member may be located at any position along the lumen, and may also be at or surrounded by one of the seals **378**, **381**, **381**A, or **376**.

Referring still to FIG. **25**, a cover sheet **383** may be a flexible polymer sheet as described in commonly assigned, copending U.S. patent application Ser. No. 10/127,395 filed Apr. 19, 2002. It should be understood of course that the sheet may be made of a variety of materials useful for coupling an analyte detecting member **390**. This allows the analyte detecting member **390** to be sterilized separately from the cartridge **370** and assembled together with the cartridge at a later time. This process may be used on certain analyte detecting members **390** that may be damaged if exposed to the sterilization process used on the cartridge **370**. Of course, some embodiments may also have the analyte detecting member **390** coupled to the cartridge **370** during sterilization. The cover sheet **383** may also form part of the seal to maintain a sterile environment about portions of the penetrating member. In other embodiments, the lumen housing penetrating member may be enclosed and not use a sheet **383** to help form a sterile environment. In still further embodiments, the sheet **383** may be sized to focus on covering sample chamber **384**.

As illustrated in FIG. **26**, cartridge **370** has at least one port **374**. A plurality of penetrating members **312** are in cartridge **370**. Although cartridge **370** is shown in FIG. **26** to have a linear design, the cartridge **370** may also have a curved, round, circular, triangular, or other configuration useful for positioning a penetrating member for use with a drive force generator. A seal **382** is associated with each penetrating member **312** in order to maintain each penetrating member **312** in a sterile environment in cartridge **370** prior to launch. Prior to launch, seal **382** associated with the penetrating member **312** to be launched is broken. In one embodiment, a punch (not shown) is used to push down on the seal **382** covering the port **376** of the cartridge **370**. This breaks the seal **382** and also pushes it downward, allowing the penetrating member to exit the cartridge without contacting the seal **382**. The timing of the breaking of the seal **382** may be varied so long as the penetrating member remains substantially sterile when being launched towards the tissue site **320**. In other embodiments, the port **376** may have a seal **383** that protrudes outward and is broken off by the downward motion of the punch. One or more sample chambers **384** are included in cartridge **370**. In one embodiment, each penetrating member **312** has an associated sample chamber **384**. In one embodiment, illustrated in FIG. **27**, penetrating member **312** is extendable through an opening **386** of its associated sample chamber **384**. In some embodiments, a seal **387** may be included in the sample chamber **384**. Seals **382** and **387** may be made from a variety of materials such as but not limited to metallic foil, aluminum foil, paper, polymeric material, or laminates combining any of the above. The seals may also be made of a fracturable material. The seals may be made of a material that can easily be broken when a device applies a force thereto. The seals alone or in combination with other barriers may be used to create a sterile environment about at least the tip of the penetrating member prior to lancing or actuation.

With reference now to the embodiment of FIG. **28**, each sample chamber **384** may have an opening **388** for transport of a body fluid into the sample chamber **384**. The size of sample chambers **384** in FIGS. **26** through **28** can vary. In various embodiments, sample chambers **384** are sized to receive, no more than 1.0 μL of the body fluid, no more than 0.75 μL of the body fluid, no more than 0.5 μL of the body fluid, no more than 0.25 μL of the body fluid, no more than 0.1 μL of the body fluid, and the like. It will be appreciated that sample chambers **384** can have larger or smaller sizes.

An analyte detecting member **390** may associated with each sample chamber **384**. The analyte detecting member **390** may be designed for use with a variety of different sensing techniques as described in commonly assigned, copending U.S. patent application Ser. No. 10/127,395 filed Apr. 19, 2002. Analyte detecting member **390** can be positioned in sample chamber **384**, at an exterior of sample chamber **384**, or at other locations useful for obtaining an analyte. Analyte detecting member **390** can be in a well **392**, or merely be placed on a support.

In one embodiment, analyte detecting member **390** includes chemistries that are utilized to measure and detect glucose, and other analytes. In another embodiment, analyte detecting member **390** is utilized to detect and measure the amount of different analytes in a body fluid or sample. In various embodiments, analyte detecting member **390** determines a concentration of an analyte in a body fluid using a sample that does not exceed a volume of, 1 μL of a body fluid disposed in sample chamber **384**, 0.75 μL of a body fluid disposed in sample chamber **384**, 0.5 μL of a body fluid disposed in sample chamber **384**, 0.25 μL of a body fluid disposed in sample chamber **384**, 0.1 μL of a body fluid disposed in sample chamber **384**, and the like. For example and not by way of limitation, the sample chamber **384** may be of a size larger than the volumes above, but the analyte

detecting member **390** can obtain an analyte reading using the amounts of fluid described above.

As illustrated in FIG. **29**, tissue penetrating system **310** can include a housing member **394**, a penetrating member **312** positioned in housing member **394**, and analyte detecting member **390** coupled to a sample chamber **384**. Analyte detecting member **390** is configured to determine a concentration of an analyte in a body fluid using with a variety of different body fluid, sample, volumes. In various embodiments, the volume is less than 1 μL of body fluid disposed in sample chamber **384**, 0.75 of body fluid disposed in sample chamber **384**, 0.5 of body fluid disposed in sample chamber **384**, 0.25 of body fluid disposed in sample chamber **384**, 0.1 of body fluid disposed in sample chamber **384** and the like. Each tip of a penetrating member **312** is configured to extend through an opening of sample chamber **384**. A plurality of penetrating members **312** can be positioned in housing member **394**. Housing member **394** can be the same as cartridge **370**. Cartridge **370** can have distal and proximal ports **374** and **376**, respectively. Additionally, in this embodiment, a plurality of cartridges **370** can be provided, each associated with a penetrating member **312**.

Referring to FIG. **30**, each penetrating member **312** has a packing density, or occupied volume, in cartridge **370**. In various embodiments, the packing density of each penetrating member **312** in cartridge **370** can be no more than, 5.0 cm3/penetrating member **312**, 4.0 cm3/penetrating member **312**, 3.0 cm3/penetrating member **312**, 2.0 cm3/penetrating member **312**, 1.0 cm3/penetrating member **312**, 0.75 cm3/penetrating member **312**, 0.5 cm3/penetrating member **312**, 0.25 cm3/penetrating member **312**, 0.1 cm3/penetrating member **312**, and the like. In other words, the volume required for each penetrating member does not exceed 5.0 cm3/penetrating member **312**, 4.0 cm3/penetrating member **312**, 3.0 cm3/penetrating member **312**, 2.0 cm3/penetrating member **312**, 1.0 cm3/penetrating member **312**, 0.75 cm3/penetrating member **312**, 0.5 cm3/penetrating member **312**, 0.25 cm3/penetrating member **312**, 0.1 cm3/penetrating member **312**, and the like. So, as seen in FIG. **30**, if the total package volume of the cartridge is defined as X and the cartridge includes Y number of penetrating members **312**, penetrating members **312** and test area, or other unit **395**, the volume for each unit does not exceed 5.0 cm3/unit, 4.0 cm3/unit, 3.0 cm3/unit, 2.0 cm3/unit, 1.0 cm3/unit, 0.75 cm3/unit, 0.5 cm3/unit, 0.25 cm3/unit, 0.1 cm3/unit, and the like.

In various embodiments, each penetrating member **312** and its associated sample chamber **384** have a combined packing density of no more than about 5.0 cm3, 4.0 cm3, 3.0 cm3, 2.0 cm3, 1.0 cm3, 0.75 cm3, 0.5 cm3, 0.25 cm3, 0.1 cm3, and the like.

With reference now to FIG. **31**, tissue penetrating system **310** can have a first seal **378** formed at distal port **374** and a second seal **380** formed at proximal port **376** of cartridge **370**. Prior to launching of penetrating member **312**, distal seal **378** and second seal **380** maintain a distal tip of penetrating member **312** and sample chamber **384** in a sterile environment. Second seal **380** is breached, and penetrating member **312** is then launched.

As illustrated in FIG. **32**, a plurality of lumens **396** can be positioned between distal port **374** and proximal port **376** of cartridge **370** for slidably receiving a penetrating member **312**. Sample chamber **384** is defined by cartridge **370**, has an opening **398** and is associated with penetrating member **312**. First seal **378** covers distal port **374**, and a second seal **380** covers proximal port **376**.

In another embodiment as shown in FIG. **33**, tissue penetrating system **310** includes a plurality of cartridges **370**, penetrating member driver **316**, and a plurality of penetrating members **312** coupled to penetrating member driver **316**. Each penetrating member **312** is associated with a cartridge **370**. A plurality of gas-tightly sealed enclosures **400** are coupled in an array. Each enclosure **400** fully contains at least one of cartridge **370**. Enclosures **400** are configured to be advanceable on cartridge transport device **372** that individually releases cartridges **370** from sacks or enclosures **400** and loads them individually onto penetrating member driver **316**. The enclosures **400** may be removed by peeling back a top portion of the tape as shown in FIG. **22**B.

In another embodiment, a plurality of penetrating members **312** each have a sharpened distal tip. A penetrating member driver **316** is coupled to each penetrating member **312**. A plurality of cartridges **370** are coupled in an array. Each cartridge **370** houses a penetrating member **312** and is configured to permit penetrating member driver **316** to engage each of penetrating members **312** sequentially. Each cartridge **370** has a plurality of seals positioned to provide that the sharpened distal tips remain in a sterile environment before penetrating target tissue **320**. Penetrating members **312** are launched without breaking a seal using the penetrating member.

Referring now to FIG. **34**, a plurality of cartridges **370** are provided, each having distal and proximal ports **374** and **376**, respectively. A plurality of penetrating members **312** are each associated with a cartridge **370**. Each penetrating member **312** has a sharpened distal tip and a shaft portion slidably disposed within cartridge **370**. As seen in FIG. **34**, the cartridges **370** may be coupled together by a connector or flexible support **403**. A seal **404** is formed by a fracturable material between the penetrating member **312** and each cartridge **370**. Seal **404** is positioned in at least one of distal or proximal ports **374** and **376**, respectively, of cartridge **370**. Cartridge transport device **372** moves each cartridge **370** to a position **405** that aligns penetrating member **312** with penetrating member driver **316** so that penetrating member **312** can be driven along a path into target tissue **320**.

In another embodiment of the present invention as seen in FIG. **35**, tissue penetrating system **310** includes a housing member **406**, the plurality of penetrating members **312** positioned in housing member **406**, and a tissue stabilizing member **408**, which can also be a pressure applicator, stimulating member, stimulating vibratory member that imparts motion to a tissue surface, and the like. Tissue stabilizing member **408** can be positioned to at least partially surround an impact location of the penetrating member **312** on the target tissue **320** site. Tissue stabilizing member **408** can, enhance fluid flow from target tissue **320**, stretch a target tissue **320** surface, apply a vacuum to target tissue **320**, apply a force to target tissue **320** and cause target tissue **320** to press in an inward direction relative to housing member **406**, apply a stimulation to target tissue **320**, and the like. Tissue stabilizing member **408** can have a variety of different configurations. In one embodiment, tissue stabilizer member **408** includes a plurality of protrusions **410**. In some further embodiments, a vacuum source **412** may be provided to assist the creation of a low pressure environment in the tissue stabilizing member **408** or along the fluid path to a sample chamber associated with the system **310**. In some embodiments, the tissue stabilizing member **408** is mounted on the cartridge **370**. In other embodiments, the member **408** may be mounted on the housing **406**. The member **408** may also be pressed against the tissue site **320**

and act as a pressure applicator. The member **408** may also be used against a variety of tissue including but not limited to skin or other body tissue.

Referring now to FIGS. **36** and **37**, a cartridge **370** is shown with a penetrating member **312** creating a wound W in the tissue site **320**. In FIG. **36**, a movable capillary member **420** is extended towards the wound W as indicated by arrow **422** to gather body fluid being expressed from the wound. The fluid may be drawn to a sample chamber **384** (not shown). In FIG. **37**, the wound W is created and then the entire cartridge is moved to the tissue site **320** to gather body fluid from the wound W. In some embodiments, the cartridge **370** moves towards the wound W relative to the housing **406**.

Tissue penetrating systems **310** of FIGS. **22** through **37**, can be utilized in a variety of different applications to detect any number of different analytes, including but not limited to glucose. The systems **310** may be used to measure potassium, other ions, or analytes associated with the process of glucose monitoring. The analyte detecting member **390** may further be adapted to measure other analytes found in body fluid.

In a still further embodiment, penetrating member **312** may be moved and positioned to be in engagement with penetrating member driver **316**. Penetrating member **312** is in a sterile environment, and prior to launch, the sterilizing covering, which can be a seal is removed. Tissue stabilizing member can apply a stimulation to a surface of the target tissue **320** prior to, and during penetration by penetration member. Penetrating member **312** is engaged with penetrating driving member and controllably pierces a target tissue **320** site. Penetrating member sensor **324** is utilized to control penetration depth and velocity of penetrating member **312**. Penetrating member **312** is stopped at a desired depth below a surface of target tissue **320** in order to reduce or eliminate without multiple oscillations against the surface of target tissue **320**. A wound is created, causing blood to flow into sample chamber **384**. In various embodiments, no more than 1 μL of a body fluid is collected in sample chamber **384**.

A number of different preferences, options, embodiment, and features have been given above, and following any one of these may results in an embodiment of this invention that is more presently preferred than a embodiment in which that particular preference is not followed. These preferences, options, embodiment, and features may be generally independent, and additive; and following more than one of these preferences may result in a more presently preferred embodiment than one in which fewer of the preferences are followed.

While the invention has been described and illustrated with reference to certain particular embodiments thereof, those skilled in the art will appreciate that various adaptations, changes, modifications, substitutions, deletions, or additions of procedures and protocols may be made without departing from the spirit and scope of the invention. Any of the embodiments of the invention may be modified to include any of the features described above or feature incorporated by reference herein. For example, the cartridge of FIG. **26** may be adapted to include a distal portion with a tissue stabilizing member. The cartridge of FIG. **26** may be adapted for use with a vacuum device. The cartridge may include indexing features such as notches on the distal portion or outer radial periphery for those cartridges with a radial configuration. The notches will facilitate positioning, among other things, and may be used for movement. Other cartridges or tapes herein may be modified with notches or tractor holes to facilitate movement. User interfaces, human interfaces, and other interfaces may be added to any of the embodiments of the present invention.

With any of the above embodiments, the location of the penetrating member drive device may be varied, relative to the penetrating members or the cartridge. With any of the above embodiments, the penetrating member tips may be uncovered during actuation (i.e. penetrating members do not pierce the penetrating member enclosure or protective foil during launch). With any of the above embodiments, the penetrating members may be a bare penetrating member during launch. With any of the above embodiments, the penetrating members may be bare penetrating members prior to launch as this may allow for significantly tighter densities of penetrating members. In some embodiments, the penetrating members may be bent, curved, textured, shaped, or otherwise treated at a proximal end or area to facilitate handling by an actuator. The penetrating member may be configured to have a notch or groove to facilitate coupling to a gripper or coupler. The notch or groove may be formed along an elongate portion of the penetrating member. The coupler may be designed to create a frictional only type grip on the penetrating member.

With any of the above embodiments, any open cavity housing the penetrating may be on the bottom or the top of the cartridge, with the gripper on the other side. In some embodiments, sensors may be printed on the top, bottom, or side of the cavities. The front end of the cartridge maybe in contact with a user during lancing. The same driver may be used for advancing and retraction of the penetrating member. The penetrating member may have a diameters and length suitable for obtaining the blood volumes described herein. The penetrating member driver may also be in substantially the same plane as the cartridge. The driver may use a through hole or other opening to engage a proximal end of a penetrating member to actuate the penetrating member along a path into and out of the tissue.

Any of the features described in this application or any reference disclosed herein may be adapted for use with any embodiment of the present invention. For example, the devices of the present invention may also be combined for use with injection penetrating members or needles as described in commonly assigned, copending U.S. patent application Ser. No. 10/127,395 filed Apr. 19, 2002. A sensor to detect the presence of foil may also be included in the lancing apparatus. For example, if a cavity has been used before, the foil or sterility barrier will be punched. The sensor can detect if the cavity is fresh or not based on the status of the barrier. It should be understood that in optional embodiments, the oxidase or other analyte detection material on a nanowire or nanotube may be used with the present invention. Expected variations or differences in the results are contemplated in accordance with the objects and practices of the present invention. It is intended, therefore, that the invention be defined by the scope of the claims which follow and that such claims be interpreted as broadly as is reasonable.

What is claimed is:

1. A tissue penetrating device, comprising: a housing member;

an electronic penetrating member driver positioned in the housing member a plurality of penetrating members positioned in the housing member,

each penetrating member coupled to and driven by the electronic penetrating member driver;

a first processor coupled to the electronic penetrating member driver and to a feedback loop, the first pro-

cessor storing penetrating member driver profiles in a memory, selecting a penetrating member driver profile from a set of alternative driver profiles based on a desired tissue penetration performance, and modifying an electronic penetrating member driver profile based on additional user input information, the first processor configured to modulate power from a power supply to the electronic penetrating member driver in response to a modification of the electronic penetrating member driver profile;

a plurality of sample chambers positioned in the housing member, each sample chamber associated with a penetrating member;

an interface coupled with the first processor coupled to a second processor, the second processor including a sleep mode and can run intermittently to conserve power, the second processor providing an alarm time set;

a real time clock coupled to one or more alarms to provide a user with a reminder of a next penetrating event; and

an interface surface that is coupled to the housing member.

2. The device of claim **1**, wherein the interface surface includes a tissue stabilizing member to cause at least a portion of the tissue surface to press in an inward direction relative to the housing member.

3. The device of claim **2**, wherein the interface surface is configured to enhance fluid flow from a wound created below the tissue surface.

4. The device of claim **2**, wherein the interface surface is configured to stretch the tissue surface.

5. The device of claim **2**, wherein the interface surface is configured to apply a force to the tissue surface.

6. The device of claim **2**, wherein the interface surface is configured to be positioned to at least partially surround an impact location of the penetrating member on the tissue surface.

7. The device of claim **2**, wherein the interface surface is a stimulating member.

8. The device of claim **1**, further comprising:

a vacuum source configured to assist creation of a low pressure environment in the interface surface or along a fluid path to a sample chamber.

9. The device of claim **1**, wherein each sample chamber has a volume no greater than 1 μL.

10. The device of claim **1**, wherein in a first direction each of the penetrating members moves toward the tissue surface at a speed that is different than a speed at which each of the penetrating members moves away from the tissue surface.

11. The device of claim **1**, wherein in a first direction each penetrating member moves toward the tissue surface at a speed that is greater than a speed at which the penetrating member moves away from the tissue surface.

12. The device of claim **10**, wherein a speed of a penetrating member in the first direction towards is the range of 0.05 to 60 m/sec.

13. The device of claim **10**, wherein a speed of a penetrating member in the first direction is the range of 0.1 to 20.0 m/sec.

14. The device of claim **10**, wherein a speed of a penetrating member in the first direction is the range of 1.0 to 10.0 m/sec.

15. The device of claim **1**, wherein further comprising:

an interface coupled to the clock.

16. The device of claim **1**, wherein in a first direction the penetrating member driver moves each penetrating member toward the tissue surface at a speed that is different than a speed at which each of the penetrating members moves away from the tissue surface.

17. The device of claim **1**, wherein in a first direction each penetrating member moves by the penetrating member driver towards the tissue surface at a speed that is greater than a speed at which the penetrating member moves away from the tissue surface.

18. The device of claim **17**, wherein a speed of a penetrating member in the first direction towards is the range of 0.05 to 60 m/sec.

19. The device of claim **17**, wherein a speed of a penetrating member in the first direction is the range of 0.1 to 20.0 m/sec.

20. The device of claim **17**, wherein a speed of a penetrating member in the first direction is the range of 1.0 to 10.0 m/sec.

* * * * *