US009801527B2

(12) **United States Patent**
Ferren et al.

(10) **Patent No.: US 9,801,527 B2**
(45) **Date of Patent: *Oct. 31, 2017**

(54) **LUMEN-TRAVELING BIOLOGICAL INTERFACE DEVICE**

(75) Inventors: **Bran Ferren**, Beverly Hills, CA (US); **W. Daniel Hillis**, Encino, CA (US); **Roderick A. Hyde**, Redmond, WA (US); **Muriel Y. Ishikawa**, Livermore, CA (US); **Edward K. Y. Jung**, Bellevue, WA (US); **Eric C. Leuthardt**, St. Louis, MO (US); **Nathan P. Myhrvold**, Medina, WA (US); **Clarence T. Tegreene**, Bellevue, WA (US); **Lowell L. Wood, Jr.**, Bellevue, WA (US); **Victoria Y. H. Wood**, Livermore, CA (US)

(73) Assignee: **Gearbox, LLC**, Bellevue, WA (US)

(*) Notice: Subject to any disclaimer, the term of this patent is extended or adjusted under 35 U.S.C. 154(b) by 1740 days.

This patent is subject to a terminal disclaimer.

(21) Appl. No.: **11/725,982**

(22) Filed: **Mar. 19, 2007**

(65) **Prior Publication Data**

US 2008/0103440 A1 May 1, 2008

Related U.S. Application Data

(63) Continuation-in-part of application No. 10/949,186, filed on Sep. 24, 2004, now Pat. No. 8,092,549, and
(Continued)

(51) **Int. Cl.**
A61B 1/04 (2006.01)
A61B 1/00 (2006.01)
(Continued)

(52) **U.S. Cl.**
CPC ***A61B 1/00156*** (2013.01); ***A61B 1/041*** (2013.01); ***A61B 5/0031*** (2013.01);
(Continued)

(58) **Field of Classification Search**
CPC A61B 1/00156; A61B 1/041
(Continued)

(56) **References Cited**

U.S. PATENT DOCUMENTS

3,391,697 A 7/1968 Greatbatch
3,802,417 A 4/1974 Lang
(Continued)

FOREIGN PATENT DOCUMENTS

CA 2 426 746 A1 5/2002
CA 2 433 147 A1 7/2002
(Continued)

OTHER PUBLICATIONS

UK Intellectual Property Office Examination Report Under Section 18(3), App. No. GB0821523.8; Jul. 2, 2009; pp. 1-2.
(Continued)

Primary Examiner — Eric D. Bertram
(74) *Attorney, Agent, or Firm* — Suiter Swantz pc llo

(57) **ABSTRACT**

Lumen-traveling biological interface devices and associated methods and systems are described. Lumen-traveling biological interface devices capable of traveling within a body lumen may include a propelling mechanism to produce movement of the lumen-traveling device within the lumen, electrodes or other electromagnetic transducers for detecting biological signals and electrodes, coils or other electromagnetic transducers for delivering electromagnetic stimuli to stimulus responsive tissues. Lumen-traveling biological interface devices may also include additional components such as sensors, an active portion, and/or control circuitry.

24 Claims, 91 Drawing Sheets

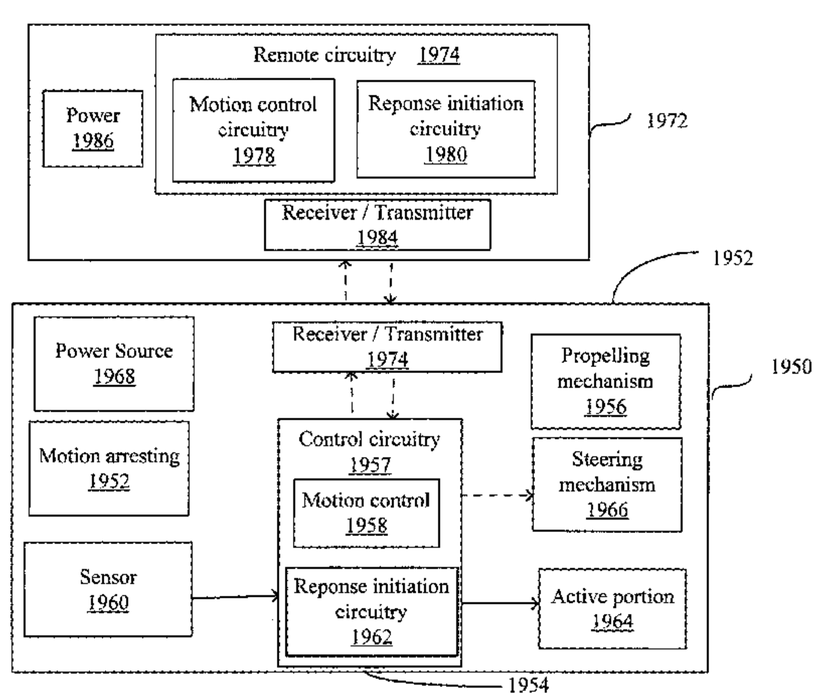

Related U.S. Application Data

a continuation-in-part of application No. 10/827,576, filed on Apr. 19, 2004, now Pat. No. 8,337,482, and a continuation-in-part of application No. 10/827,578, filed on Apr. 19, 2004, now abandoned, and a continuation-in-part of application No. 10/827,572, filed on Apr. 19, 2004, now Pat. No. 7,850,676, and a continuation-in-part of application No. 10/827,390, filed on Apr. 19, 2004, now Pat. No. 8,361,013, and a continuation-in-part of application No. 11/403,230, filed on Apr. 12, 2006, now Pat. No. 9,011,329, and a continuation-in-part of application No. 11/417,898, filed on May 4, 2006, now Pat. No. 8,353,896, and a continuation-in-part of application No. 11/478,368, filed on Jun. 28, 2006, now abandoned, and a continuation-in-part of application No. 11/485,619, filed on Jul. 11, 2006, now Pat. No. 9,173,837, and a continuation-in-part of application No. 11/645,357, filed on Dec. 21, 2006, now Pat. No. 7,857,767, and a continuation-in-part of application No. 11/645,358, filed on Dec. 21, 2006, now Pat. No. 8,000,784, and a continuation-in-part of application No. 11/651,946, filed on Jan. 9, 2007, now Pat. No. 7,998,060, and a continuation-in-part of application No. 11/726,031, filed on Mar. 19, 2007, and a continuation-in-part of application No. 11/726,025, filed on Mar. 19, 2007.

(51) **Int. Cl.**

A61B 10/04	(2006.01)
A61B 17/29	(2006.01)
A61B 17/295	(2006.01)
A61F 2/04	(2013.01)
A61B 34/32	(2016.01)
A61B 34/20	(2016.01)
A61B 34/00	(2016.01)
A61B 5/00	(2006.01)
A61B 5/0205	(2006.01)
A61B 5/0215	(2006.01)
A61B 5/03	(2006.01)
A61B 5/04	(2006.01)
A61B 5/145	(2006.01)
A61B 7/00	(2006.01)
A61B 8/12	(2006.01)
A61B 8/00	(2006.01)
A61B 17/22	(2006.01)
A61B 17/3207	(2006.01)
A61B 17/00	(2006.01)
A61F 2/30	(2006.01)
A61N 1/05	(2006.01)
A61N 1/372	(2006.01)
A61B 90/00	(2016.01)
A61B 34/30	(2016.01)

(52) **U.S. Cl.**

CPC ***A61B 5/14539*** (2013.01); ***A61B 5/4839*** (2013.01); ***A61B 8/56*** (2013.01); ***A61B 10/04*** (2013.01); ***A61B 17/29*** (2013.01); ***A61B 17/295*** (2013.01); ***A61B 34/20*** (2016.02); ***A61B 34/32*** (2016.02); ***A61B 34/72*** (2016.02); ***A61F 2/04*** (2013.01); *A61B 1/00016* (2013.01); *A61B 1/00029* (2013.01); *A61B 5/0008* (2013.01); *A61B 5/0084* (2013.01); *A61B 5/0215* (2013.01); *A61B 5/02055* (2013.01); *A61B 5/03* (2013.01); *A61B 5/04* (2013.01); *A61B 5/145* (2013.01); *A61B 5/415* (2013.01); *A61B 5/418* (2013.01); *A61B 7/00* (2013.01); *A61B 8/12* (2013.01); *A61B 8/4472* (2013.01); *A61B 17/22* (2013.01); *A61B 17/3207* (2013.01); *A61B 2017/00022* (2013.01); *A61B 2017/00345* (2013.01); *A61B 2034/2051* (2016.02); *A61B 2034/301* (2016.02); *A61B 2034/303* (2016.02); *A61B 2090/064* (2016.02); *A61B 2560/0219* (2013.01); *A61F 2002/3067* (2013.01); *A61F 2002/30668* (2013.01); *A61F 2250/0001* (2013.01); *A61F 2250/0002* (2013.01); *A61F 2250/0068* (2013.01); *A61N 1/05* (2013.01); *A61N 1/37205* (2013.01)

(58) **Field of Classification Search**

USPC 607/2

See application file for complete search history.

(56) **References Cited**

U.S. PATENT DOCUMENTS

3,821,469	A	6/1974	Whetstone et al.
3,837,339	A	9/1974	Aisenberg et al.
3,941,127	A	3/1976	Froning
3,983,474	A	9/1976	Kuipers
4,054,881	A	10/1977	Raab
4,119,900	A	10/1978	Kremnitz
4,202,349	A	5/1980	Jones
4,262,306	A	4/1981	Renner
4,267,831	A	5/1981	Aguilar
4,314,251	A	2/1982	Raab
4,317,078	A	2/1982	Weed et al.
4,339,953	A	7/1982	Iwasaki
4,367,741	A	1/1983	Michaels
4,396,885	A	8/1983	Constant
4,403,321	A	9/1983	Krüger
4,418,422	A	11/1983	Richter et al.
4,431,005	A	2/1984	McCormick
4,583,190	A	4/1986	Salb
4,585,652	A	4/1986	Miller et al.
4,628,928	A	12/1986	Lowell
4,638,798	A	1/1987	Shelden et al.
4,642,786	A	2/1987	Hansen
4,651,732	A	3/1987	Frederick
4,658,214	A	4/1987	Petersen
4,714,460	A	12/1987	Calderon
4,717,381	A	1/1988	Papantonakos
4,733,661	A	3/1988	Palestrant
4,750,488	A	6/1988	Wuchinich et al.
4,763,667	A	8/1988	Manzo
4,769,006	A	9/1988	Papantonakos
4,771,772	A	9/1988	DeWitt
4,785,806	A	11/1988	Deckelbaum
4,795,434	A	1/1989	Kujawski
4,800,898	A	1/1989	Hess et al.
4,805,615	A	2/1989	Carol
4,817,601	A	4/1989	Roth et al.
4,871,351	A	10/1989	Feingold
4,889,526	A	12/1989	Rauscher et al.
4,905,689	A	3/1990	Stack et al.
4,943,296	A	7/1990	Funakubo et al.
4,944,659	A	7/1990	Labbe et al.
4,962,453	A	10/1990	Pong et al.
4,981,138	A	1/1991	Deckelbaum et al.
4,994,071	A	2/1991	MacGregor
5,019,372	A	5/1991	Folkman et al.
5,031,109	A	7/1991	Gloton
5,042,494	A	8/1991	Alfano
5,046,501	A	9/1991	Crilly
5,051,906	A	9/1991	Evans, Jr. et al.
5,078,140	A	1/1992	Kwoh
5,086,401	A	2/1992	Glassman et al.
5,115,137	A	5/1992	Andersson-Engels et al.
5,153,827	A	10/1992	Coutre et al.
5,165,064	A	11/1992	Mattaboni
5,176,638	A	1/1993	Don Michael
5,188,111	A	2/1993	Yates et al.

(56) **References Cited**

U.S. PATENT DOCUMENTS

5,204,814 A 4/1993 Noonan et al.
5,234,457 A 8/1993 Andersen
5,261,892 A 11/1993 Bertaud et al.
5,269,303 A 12/1993 Wernicke et al.
5,275,594 A 1/1994 Baker et al.
5,279,607 A 1/1994 Schentag et al.
5,289,557 A 2/1994 Sheinis et al.
5,293,872 A 3/1994 Alfano et al.
5,310,404 A 5/1994 Gyory et al.
5,313,835 A 5/1994 Dunn
5,314,451 A 5/1994 Mulier
5,321,614 A 6/1994 Ashworth
5,331,966 A 7/1994 Bennett et al.
5,335,657 A 8/1994 Terry, Jr. et al.
5,337,732 A 8/1994 Grundfest et al.
5,338,625 A 8/1994 Bates et al.
5,339,051 A 8/1994 Koehler et al.
5,350,375 A 9/1994 Deckelbaum et al.
5,353,807 A 10/1994 DeMarco
5,374,285 A 12/1994 Vaiani et al.
5,381,786 A 1/1995 Spears
5,386,741 A 2/1995 Rennex
5,395,390 A 3/1995 Simon et al.
5,398,670 A 3/1995 Ortiz et al.
5,403,311 A 4/1995 Abele et al.
5,411,551 A 5/1995 Winston et al.
5,437,660 A 8/1995 Johnson et al.
5,476,450 A 12/1995 Ruggio
5,497,147 A 3/1996 Arms et al.
5,502,638 A 3/1996 Takenaka
5,507,287 A 4/1996 Palcic et al.
5,522,394 A 6/1996 Zurbrügg
5,531,679 A 7/1996 Schulman et al.
5,551,953 A 9/1996 Lattin et al.
5,554,914 A 9/1996 Miyazawa
5,569,968 A 10/1996 Lal et al.
5,574,347 A 11/1996 Neubauer
5,589,932 A 12/1996 García-Rubio et al.
5,593,434 A 1/1997 Williams
5,599,324 A 2/1997 McAlister et al.
5,604,531 A 2/1997 Iddan et al.
5,610,488 A 3/1997 Miyazawa
5,624,398 A 4/1997 Smith et al.
5,632,754 A 5/1997 Farley et al.
5,634,920 A 6/1997 Hohla
5,643,296 A 7/1997 Hundertmark et al.
5,662,587 A 9/1997 Grundfest et al.
5,669,874 A 9/1997 Feiring
5,670,329 A 9/1997 Oberhardt
5,674,276 A 10/1997 Andersen et al.
5,688,269 A 11/1997 Newton et al.
5,695,457 A 12/1997 St. Goar et al.
5,697,967 A 12/1997 Dinh et al.
5,702,432 A 12/1997 Chen et al.
5,705,293 A 1/1998 Hobson
5,728,089 A 3/1998 Lal et al.
5,735,276 A 4/1998 Lemelson
5,737,279 A 4/1998 Carter
5,758,298 A 5/1998 Guldner
5,782,798 A 7/1998 Rise
5,804,563 A 9/1998 Still et al.
5,807,395 A 9/1998 Mulier et al.
5,819,736 A 10/1998 Avny et al.
5,827,190 A 10/1998 Palcic et al.
5,830,179 A 11/1998 Mikus et al.
5,830,207 A 11/1998 Leeb et al.
5,831,012 A 11/1998 Nilsson et al.
5,833,603 A 11/1998 Kovacs et al.
5,843,139 A 12/1998 Goedeke et al.
5,855,801 A 1/1999 Lin et al.
5,865,754 A 2/1999 Sevick-Muraca et al.
5,865,828 A 2/1999 Jeng
5,873,835 A 2/1999 Hastings et al.
5,902,282 A 5/1999 Balbierz
5,908,027 A 6/1999 Butterfield et al.
5,921,982 A 7/1999 Lesh et al.
5,931,788 A 8/1999 Keen et al.
5,947,119 A 9/1999 Reznick
5,951,600 A 9/1999 Lemelson
5,954,675 A 9/1999 Dellagatta
5,964,773 A 10/1999 Greenstein
6,004,269 A 12/1999 Crowley et al.
6,016,449 A 1/2000 Fischell et al.
6,019,729 A 2/2000 Itoigawa et al.
6,022,316 A 2/2000 Eppstein et al.
6,053,873 A 4/2000 Govari et al.
6,058,932 A 5/2000 Hughes
6,086,528 A 7/2000 Adair
6,102,845 A 8/2000 Woodard et al.
6,108,597 A 8/2000 Kirchner et al.
6,111,520 A 8/2000 Allen et al.
6,128,538 A 10/2000 Fischell et al.
6,134,474 A 10/2000 Fischell et al.
6,149,603 A 11/2000 Parker
6,159,230 A 12/2000 Samuels
6,164,284 A 12/2000 Schulman et al.
6,165,170 A 12/2000 Wynne et al.
6,170,488 B1 1/2001 Spillman, Jr. et al.
6,175,757 B1 1/2001 Watkins et al.
6,179,789 B1 1/2001 Tu et al.
6,185,452 B1 2/2001 Schulman et al.
6,186,986 B1 2/2001 Berg et al.
6,187,599 B1 2/2001 Asher et al.
6,197,013 B1 3/2001 Reed et al.
6,219,577 B1 4/2001 Brown, III et al.
6,221,099 B1 4/2001 Andersen et al.
6,240,312 B1 * 5/2001 Alfano A61B 1/00016 128/903
6,240,316 B1 5/2001 Richmond et al.
6,248,345 B1 6/2001 Goldenheim et al.
6,249,076 B1 6/2001 Madden et al.
6,255,361 B1 7/2001 Rajagopalan et al.
6,255,793 B1 7/2001 Peless et al.
6,258,576 B1 7/2001 Richards-Kortum et al.
6,263,245 B1 7/2001 Snell
6,278,379 B1 8/2001 Allen et al.
6,280,386 B1 8/2001 Alfano et al.
6,289,270 B1 9/2001 Baumgarten
6,290,668 B1 9/2001 Gregory et al.
6,295,990 B1 10/2001 Lewis et al.
6,296,638 B1 10/2001 Davison et al.
6,322,532 B1 11/2001 D'Sa et al.
6,337,997 B1 1/2002 Rise
6,372,248 B1 4/2002 Qin et al.
6,383,162 B1 5/2002 Sugarbaker
6,384,741 B1 5/2002 O'Leary, Sr.
6,385,472 B1 5/2002 Hall et al.
6,398,280 B1 6/2002 Parker et al.
6,400,980 B1 6/2002 Lemelson
6,402,678 B1 6/2002 Fischell et al.
6,409,674 B1 6/2002 Brockway et al.
6,417,641 B2 7/2002 Peless et al.
6,431,171 B1 8/2002 Burton
6,436,120 B1 8/2002 Meglin
6,442,413 B1 8/2002 Silver
6,443,978 B1 9/2002 Zharov
6,450,937 B1 9/2002 Mercereau et al.
6,453,199 B1 * 9/2002 Kobozev A61N 1/36007 340/573.1
6,464,687 B1 10/2002 Ishikawa et al.
6,475,639 B2 11/2002 Shahinpoor et al.
6,490,483 B2 12/2002 Willis
6,491,618 B1 12/2002 Ganz
6,493,607 B1 12/2002 Bourne et al.
6,497,714 B1 12/2002 Ishikawa et al.
6,500,174 B1 12/2002 Maguire et al.
6,512,940 B1 1/2003 Brabec et al.
6,512,949 B1 1/2003 Combs et al.
6,512,950 B2 1/2003 Li et al.
6,514,237 B1 2/2003 Maseda
6,530,950 B1 3/2003 Alvarado et al.
6,547,723 B1 4/2003 Ouchi
6,547,825 B1 4/2003 Shimizu et al.
6,548,982 B1 4/2003 Papanikolopoulos et al.

(56) **References Cited**

U.S. PATENT DOCUMENTS

6,554,798 B1 4/2003 Mann et al.
6,564,106 B2 5/2003 Guck et al.
6,575,969 B1 6/2003 Rittman, III et al.
6,584,352 B2 6/2003 Combs et al.
6,585,763 B1 7/2003 Keilman et al.
6,591,137 B1 7/2003 Fischell et al.
6,592,567 B1 7/2003 Levin et al.
6,597,954 B1 7/2003 Pless et al.
6,607,553 B1 8/2003 Healy et al.
6,612,982 B1 9/2003 Ouchi
6,616,676 B2 9/2003 Bashiri et al.
6,623,519 B2 9/2003 Edwin et al.
6,631,290 B1 10/2003 Guck et al.
6,632,216 B2 10/2003 Houzego et al.
6,638,273 B1 10/2003 Farley et al.
6,648,908 B2 11/2003 Dobak, III et al.
6,666,860 B1 12/2003 Takahashi
6,669,683 B2 12/2003 Santini, Jr. et al.
6,673,042 B1 1/2004 Samson et al.
6,673,363 B2 1/2004 Luo et al.
6,679,893 B1 1/2004 Tran
6,709,388 B1 * 3/2004 Mosse et al. 600/114
6,711,423 B2 3/2004 Colvin, Jr.
6,712,835 B2 3/2004 Mazzocchi et al.
6,719,684 B2 4/2004 Kim et al.
6,723,092 B2 4/2004 Brown et al.
6,733,485 B1 5/2004 Whitehurst et al.
6,735,474 B1 5/2004 Loeb et al.
6,735,475 B1 5/2004 Whitehurst et al.
6,743,211 B1 6/2004 Prausnitz et al.
6,754,536 B2 6/2004 Swoyer et al.
6,755,802 B2 6/2004 Bell
6,755,803 B1 6/2004 Le et al.
6,764,441 B2 * 7/2004 Chiel A61B 1/00156 600/115
6,770,071 B2 8/2004 Woloszko et al.
6,773,429 B2 8/2004 Sheppard, Jr. et al.
6,776,165 B2 8/2004 Jin
6,797,522 B1 9/2004 Still et al.
6,802,811 B1 10/2004 Slepian
6,816,632 B1 11/2004 Slice
6,817,998 B2 11/2004 LaHaye
6,824,508 B2 11/2004 Kim et al.
6,824,510 B2 11/2004 Kim et al.
6,824,561 B2 11/2004 Soykan et al.
RE38,670 E 12/2004 Asah et al.
6,834,118 B2 12/2004 Kim
6,849,183 B2 2/2005 Gorsuch et al.
6,855,115 B2 2/2005 Fonseca et al.
6,860,867 B2 3/2005 Seward et al.
6,861,001 B2 3/2005 Lee et al.
6,866,626 B2 3/2005 Long et al.
6,869,430 B2 3/2005 Balbierz et al.
6,875,209 B2 4/2005 Zvuloni et al.
6,882,881 B1 4/2005 Lesser et al.
6,889,091 B2 5/2005 Hine et al.
6,890,303 B2 5/2005 Fitz
6,898,464 B2 5/2005 Edell et al.
6,911,004 B2 6/2005 Kim et al.
6,911,496 B2 6/2005 Rhee et al.
6,920,359 B2 7/2005 Meadows et al.
6,921,413 B2 7/2005 Mahadevan-Jansen et al.
6,925,357 B2 8/2005 Wang et al.
6,929,636 B1 8/2005 Von Alten
6,936,003 B2 8/2005 Iddan
6,939,290 B2 9/2005 Iddan
6,939,376 B2 9/2005 Shulze et al.
6,950,707 B2 9/2005 Whitehurst
6,953,589 B1 10/2005 Trautman et al.
6,958,034 B2 10/2005 Iddan
6,959,215 B2 10/2005 Gliner et al.
6,960,227 B2 11/2005 Jones et al.
6,963,792 B1 11/2005 Green
6,984,205 B2 1/2006 Gazdzinski
6,984,952 B2 1/2006 Peless et al.
6,991,617 B2 1/2006 Hektner et al.
7,003,352 B1 2/2006 Whitehurst
7,013,177 B1 3/2006 Whitehurst et al.
7,020,231 B1 3/2006 Frey et al.
7,027,134 B1 4/2006 Garcia-Rubio et al.
7,037,343 B2 5/2006 Imran
7,039,453 B2 5/2006 Mullick et al.
7,042,184 B2 5/2006 Oleynikov et al.
7,044,911 B2 5/2006 Drinan et al.
RE39,133 E 6/2006 Clayton et al.
7,066,180 B2 6/2006 Aylsworth et al.
7,066,879 B2 6/2006 Fowler et al.
7,083,578 B2 8/2006 Lewkowicz et al.
7,101,386 B2 9/2006 Dobak, III
7,115,109 B2 10/2006 Gerdts et al.
7,118,531 B2 10/2006 Krill
7,125,382 B2 10/2006 Zhou et al.
7,131,979 B2 11/2006 DiCarlo et al.
7,160,258 B2 1/2007 Imran et al.
7,171,285 B2 1/2007 Kim et al.
7,181,261 B2 2/2007 Silver et al.
7,194,063 B2 3/2007 Dilmanian et al.
7,195,641 B2 3/2007 Palmaz et al.
7,212,110 B1 5/2007 Martin et al.
7,214,182 B2 5/2007 Shimizu et al.
7,228,162 B2 6/2007 Ward et al.
7,236,821 B2 6/2007 Cates et al.
7,244,232 B2 7/2007 Connelly et al.
7,245,954 B2 7/2007 Glukhovsky
7,297,113 B1 11/2007 Russell et al.
7,341,577 B2 3/2008 Gill
7,359,574 B2 4/2008 Lennon et al.
7,365,509 B2 * 4/2008 Park A61B 1/00156 318/568.12
7,365,614 B2 4/2008 McCorquodale et al.
7,383,071 B1 6/2008 Russell et al.
7,398,734 B1 7/2008 Jean
7,451,537 B2 11/2008 Liu et al.
7,486,967 B2 2/2009 Pan et al.
7,510,699 B2 3/2009 Black et al.
7,572,228 B2 8/2009 Wolinsky et al.
7,596,403 B2 9/2009 Horn
7,625,338 B2 12/2009 Gilad et al.
7,684,840 B2 3/2010 Palti
7,713,196 B2 5/2010 Baker, Jr.
7,736,300 B2 6/2010 Ziegler et al.
7,744,542 B2 6/2010 Piaget et al.
7,801,626 B2 9/2010 Moser
7,840,271 B2 11/2010 Kieval et al.
7,857,767 B2 12/2010 Ferren et al.
7,967,016 B2 6/2011 Anderson et al.
8,036,731 B2 10/2011 Kimchy et al.
8,055,329 B2 11/2011 Kimchy et al.
8,140,141 B2 3/2012 McGreevy et al.
8,180,436 B2 5/2012 Boyden et al.
8,294,333 B2 10/2012 Salomon et al.
8,317,688 B2 11/2012 Glozman et al.
8,323,263 B2 12/2012 Wood, Jr.
9,011,329 B2 4/2015 Ferren et al.
2001/0029348 A1 10/2001 Willis
2001/0039385 A1 11/2001 Ellenz
2001/0051766 A1 12/2001 Gazdzinski
2002/0026188 A1 2/2002 Balbierz et al.
2002/0049370 A1 4/2002 Laufer et al.
2002/0065509 A1 5/2002 Lebel et al.
2002/0068080 A1 6/2002 Lerner
2002/0077369 A1 6/2002 Noolandi et al.
2002/0090388 A1 7/2002 Humes et al.
2002/0103417 A1 8/2002 Gazdzinski
2002/0107573 A1 8/2002 Steinberg
2002/0111601 A1 8/2002 Thompson
2002/0116029 A1 8/2002 Miller et al.
2002/0116034 A1 8/2002 Miller et al.
2002/0120263 A1 8/2002 Brown et al.
2002/0123674 A1 9/2002 Plicchi et al.
2002/0123770 A1 9/2002 Combs et al.
2002/0147480 A1 10/2002 Mamayek
2002/0156462 A1 10/2002 Stultz
2002/0165592 A1 11/2002 Glukhovsky et al.

(56) **References Cited**

U.S. PATENT DOCUMENTS

2002/0169436 A1 11/2002 Gurm et al.
2002/0171385 A1 11/2002 Kim et al.
2002/0183721 A1 12/2002 Santini, Jr. et al.
2002/0188323 A1 12/2002 Penner et al.
2002/0193679 A1 12/2002 Malave et al.
2002/0193855 A1 12/2002 Dobak, III
2002/0193874 A1 12/2002 Crowley
2002/0198470 A1* 12/2002 Imran A61M 31/002 600/587
2002/0198521 A1 12/2002 Maguire
2002/0198604 A1 12/2002 Schulman et al.
2003/0004403 A1 1/2003 Drinan et al.
2003/0023150 A1 1/2003 Yokoi et al.
2003/0024534 A1 2/2003 Silvestri et al.
2003/0040704 A1 2/2003 Dorros et al.
2003/0060723 A1 3/2003 Joo et al.
2003/0065250 A1 4/2003 Chiel et al.
2003/0065358 A1 4/2003 Frecker et al.
2003/0069475 A1 4/2003 Banik et al.
2003/0069523 A1 4/2003 Williams et al.
2003/0078485 A1 4/2003 Hartlep
2003/0093031 A1 5/2003 Long et al.
2003/0097082 A1 5/2003 Purdy et al.
2003/0151524 A1 8/2003 Clark
2003/0152823 A1 8/2003 Heller
2003/0153866 A1 8/2003 Long et al.
2003/0158584 A1 8/2003 Cates et al.
2003/0163177 A1 8/2003 Eggers et al.
2003/0167000 A1 9/2003 Mullick et al.
2003/0171738 A1 9/2003 Konieczynski et al.
2003/0191430 A1 10/2003 D'Andrea et al.
2003/0214579 A1 11/2003 Iddan
2003/0214580 A1 11/2003 Iddan
2003/0220556 A1 11/2003 Porat et al.
2003/0220557 A1 11/2003 Cleary et al.
2004/0008853 A1 1/2004 Pelrine et al.
2004/0018508 A1 1/2004 Friedman
2004/0019374 A1 1/2004 Hojeibane et al.
2004/0034332 A1 2/2004 Uhland
2004/0044332 A1 3/2004 Stergiopulos
2004/0049240 A1 3/2004 Gerber et al.
2004/0064093 A1 4/2004 Hektner et al.
2004/0073177 A1 4/2004 Hickle
2004/0073190 A1 4/2004 Deem et al.
2004/0073278 A1 4/2004 Pachys
2004/0092825 A1 5/2004 Madar et al.
2004/0097805 A1 5/2004 Verard et al.
2004/0097819 A1 5/2004 Duarte
2004/0098030 A1 5/2004 Makower et al.
2004/0111019 A1 6/2004 Long
2004/0133147 A1 7/2004 Woo
2004/0138517 A1 7/2004 Osorio et al.
2004/0138586 A1 7/2004 Ganz et al.
2004/0147939 A1 7/2004 Rabkin et al.
2004/0148034 A1 7/2004 Kagan et al.
2004/0152988 A1 8/2004 Weirich
2004/0162469 A1 8/2004 Imran
2004/0162501 A1 8/2004 Imran
2004/0176664 A1 9/2004 Iddan
2004/0193010 A1 9/2004 Fujimori et al.
2004/0193235 A1 9/2004 Altshuler et al.
2004/0199238 A1 10/2004 Brown et al.
2004/0199246 A1 10/2004 Chu et al.
2004/0220552 A1 11/2004 Heruth et al.
2004/0225325 A1 11/2004 Bonutti
2004/0225326 A1 11/2004 Weiner et al.
2004/0230182 A1 11/2004 Heruth et al.
2004/0260278 A1 12/2004 Anderson et al.
2004/0260391 A1 12/2004 Santini, Jr. et al.
2004/0267240 A1 12/2004 Gross et al.
2005/0004474 A1 1/2005 Iddan
2005/0004553 A1 1/2005 Douk
2005/0021023 A1 1/2005 Guglielmi et al.
2005/0027236 A1 2/2005 Douk
2005/0043583 A1 2/2005 Killmann et al.
2005/0058701 A1 3/2005 Gross et al.
2005/0062562 A1 3/2005 Ries
2005/0065592 A1 3/2005 Holzer
2005/0069925 A1 3/2005 Ford et al.
2005/0079132 A1 4/2005 Wang et al.
2005/0096712 A1 5/2005 Abraham-Fuchs et al.
2005/0107870 A1 5/2005 Wang et al.
2005/0113460 A1 5/2005 Glick
2005/0113745 A1 5/2005 Stultz
2005/0121411 A1 6/2005 Cohen
2005/0126916 A1 6/2005 Lockard et al.
2005/0137577 A1 6/2005 Heruth et al.
2005/0149170 A1 7/2005 Tassel et al.
2005/0151524 A1 7/2005 Sae-Ueng et al.
2005/0171418 A1 8/2005 Lin
2005/0171434 A1 8/2005 Madden et al.
2005/0177223 A1 8/2005 Palmaz
2005/0177239 A1 8/2005 Steinberg
2005/0182482 A1 8/2005 Wang et al.
2005/0197701 A1 9/2005 Steinberg
2005/0203613 A1 9/2005 Arney et al.
2005/0215911 A1 9/2005 Alfano et al.
2005/0216074 A1 9/2005 Sahatjian et al.
2005/0221529 A1 10/2005 Bang et al.
2005/0228259 A1 10/2005 Glukhovsky et al.
2005/0234393 A1 10/2005 Wood, Jr.
2005/0234440 A1 10/2005 Wood, Jr.
2005/0238689 A1 10/2005 Carpenter et al.
2005/0272806 A1 12/2005 Falotico et al.
2005/0272974 A1 12/2005 Iddan
2005/0277839 A1 12/2005 Alderman et al.
2005/0277912 A1 12/2005 John
2005/0278020 A1 12/2005 Wang et al.
2006/0004395 A1 1/2006 Chiel et al.
2006/0009810 A1 1/2006 Mann et al.
2006/0015146 A1 1/2006 Girouard et al.
2006/0037617 A1 2/2006 Walke et al.
2006/0042631 A1 3/2006 Martin et al.
2006/0052667 A1 3/2006 Palti et al.
2006/0058647 A1 3/2006 Strommer et al.
2006/0074479 A1 4/2006 Bailey et al.
2006/0119304 A1 6/2006 Farritor et al.
2006/0152309 A1 7/2006 Mintchev et al.
2006/0167339 A1* 7/2006 Gilad A61B 1/00087 600/101
2006/0169294 A1 8/2006 Kaler et al.
2006/0173444 A1 8/2006 Choy et al.
2006/0195015 A1 8/2006 Mullick et al.
2006/0235275 A1 10/2006 Rabinovitz et al.
2006/0241717 A1 10/2006 Whitehurst et al.
2006/0252987 A1 11/2006 Hasegawa et al.
2007/0010868 A1 1/2007 Ferren et al.
2007/0066929 A1 3/2007 Ferren et al.
2007/0083099 A1 4/2007 Henderson et al.
2007/0088334 A1 4/2007 Hillis et al.
2007/0100398 A1 5/2007 Sloan
2007/0156211 A1 7/2007 Ferren et al.
2007/0213613 A1 9/2007 Ishida et al.
2007/0213698 A1 9/2007 Altshuler et al.
2007/0225634 A1 9/2007 Ferren et al.
2007/0270782 A1 11/2007 Miesel et al.
2008/0063703 A1 3/2008 Gross et al.
2008/0066929 A1 3/2008 Costa et al.
2008/0121054 A1 5/2008 Goldenberg et al.
2008/0241847 A1 10/2008 Hoon et al.
2008/0243056 A1 10/2008 Hillis et al.
2008/0266106 A1 10/2008 Lim et al.
2009/0054883 A1 2/2009 Stolen et al.
2009/0062646 A1 3/2009 Creighton, IV et al.
2009/0069821 A1 3/2009 Farritor et al.
2009/0082652 A1 3/2009 Koh et al.
2009/0105686 A1 4/2009 Snow et al.
2009/0182388 A1 7/2009 Von Arx et al.
2009/0306728 A1 12/2009 Wright et al.
2010/0022947 A1 1/2010 Hassidov et al.
2010/0041951 A1 2/2010 Glozman et al.
2010/0145143 A1 6/2010 Salomon et al.
2010/0204546 A1 8/2010 Hassidov et al.
2010/0249505 A1 9/2010 Shoham et al.

(56) **References Cited**

U.S. PATENT DOCUMENTS

2011/0112549	A1	5/2011	Neubach et al.
2011/0158244	A1	6/2011	Long et al.
2013/0274658	A1	10/2013	Steinke et al.
2013/0304446	A1	11/2013	Rabinovitz et al.

FOREIGN PATENT DOCUMENTS

CN	99810271.7		10/2001
EP	1 245 201	A1	10/2002
EP	1 464 362	A1	10/2004
EP	1 618 831	A2	1/2006
EP	1 345 653	B1	7/2006
EP	1 331 878	B1	11/2006
EP	1 331 970	B1	8/2007
EP	2 163 206	A1	3/2010
JP	H06505662	A	6/1994
JP	2001-506871		3/1998
JP	10-099261		4/1998
JP	2002-010990		1/2002
JP	2002-153569		5/2002
JP	2003-111720	A	4/2003
JP	2005-74229		3/2005
KR	2002-0010990	A	2/2002
WO	WO 92/17240		10/1992
WO	WO 96/39999		12/1996
WO	WO 98/09582		3/1998
WO	WO 98/14243		4/1998
WO	WO 99/20335		4/1999
WO	WO 99/44665		9/1999
WO	WO 00/69515		11/2000
WO	WO 01/24731	A1	4/2001
WO	WO 02/34332	A1	5/2002
WO	WO 02/051497	A2	7/2002
WO	WO 03/072157	A1	9/2003
WO	WO 03/090618	A2	11/2003
WO	WO 03/106966	A2	12/2003
WO	WO 2004/028335	A2	4/2004
WO	WO 2004/058041	A2	7/2004
WO	WO 2004/086958	A1	10/2004
WO	WO 2005/067792	A1	7/2005
WO	WO 2005/082248	A1	9/2005
WO	WO 2006/066099	A1	6/2006
WO	WO 2011/158244	A2	12/2011

OTHER PUBLICATIONS

Martel, Sylvain; Mathieu, Jean-Baptiste; Felfoul, Ouajdi; Chanu, Arnaud; Aboussouan, Eric; Tamaz, Samer; Pouponneau, Pierre; "Automatic Navigation of an Untethered Device in the Artery of a Living Animal using a Conventional Clinical Magnetic Resonance Imaging System"; Applied Physics Letters; 2007; pp. 114105-1-114105-3; vol. 90, No. 114105; American Institute of Physics.

Rattay, F.; "The Basic Mechanism for the Electrical Stimulation of the Nervous System"; Neuroscience; 1999; pp. 335-346; vol. 89. No. 2; Elsevier Science Ltd; printed on Mar. 20, 2007.

UK Intellectual Property Office Examination Report Under Section 18(3); App. No. GB0706802.6; bearing a date of Dec. 1, 2008; pp. 1-2.

U.S. Appl. No. 11/726,031, Ferren et al.
U.S. Appl. No. 11/726,025, Ferren et al.
U.S. Appl. No. 11/651,946, Ferren et al.
U.S. Appl. No. 11/645,358, Ferren et al.
U.S. Appl. No. 11/645,357, Ferren et al.
U.S. Appl. No. 11/478,368, Ferren et al.
U.S. Appl. No. 11/403,230, Ferren et al.
U.S. Appl. No. 11/485,619, Hillis et al.
U.S. Appl. No. 11/417,898, Hillis et al.
U.S. Appl. No. 10/949,186, Hillis et al.
U.S. Appl. No. 12/075,480, Hillis et al.
U.S. Appl. No. 10/827,572, Wood, Jr., Lowell L.
U.S. Appl. No. 10/827,576, Wood, Jr., Lowell L.
U.S. Appl. No. 10/827,578, Wood, Jr., Lowell L.
U.S. Appl. No. 10/827,390, Wood, Jr., Lowell L.
U.S. Appl. No. 11/891,333, Wood, Jr., Lowell L.
U.S. Appl. No. 11/891,355, Wood, Jr., Lowell L.
U.S. Appl. No. 11/891,334, Wood, Jr., Lowell L.
U.S. Appl. No. 11/891,356, Wood, Jr., Lowell L.
U.S. Appl. No. 11/891,573, Wood, Jr., Lowell L.
U.S. Appl. No. 11/891,371, Wood, Jr., Lowell L.

"A Hydrogel-based CO2 sensor"; BIOS—The lab on a chip group; bearing a date of Aug. 29, 2005; pp. 1-2; located at: http://bios.ewi.utwente.nl/research/analysissystemssenors/ahydrogelbased.doc/index.html; printed on Apr. 25, 2006; University of Twente; the Netherlands.

Smith, Michael; "PAS: Nasal Spray Flu Vaccine Seems Safe and Effective in Young"; May 2, 2006; pp. 1-2; MedPage Today, LLC; bearing dates of 2004-2006; printed on May 4, 2006; located at http://www.medpagetoday.com/tbprint.cfm?tbid=3213.

UK Examination Report Under Section 18(3); App. No. GB0821524.6; bearing a date of May 6, 2010 (received by our Agent on May 7, 2010); pp. 1-3.

U.S. Appl. No. 11/541,492, Jung et al.
U.S. Appl. No. 11/541,452, Jung et al.
U.S. Appl. No. 11/541,448, Jung et al.
U.S. Appl. No. 11/541,378, Jung et al.
U.S. Appl. No. 11/541,377, Jung et al.
U.S. Appl. No. 11/526,203, Jung et al.
U.S. Appl. No. 11/526,201, Jung et al.
U.S. Appl. No. 11/526,144, Jung et al.
U.S. Appl. No. 11/526,089, Jung et al.
U.S. Appl. No. 11/454,343, Jung et al.
U.S. Appl. No. 11/453,343, Jung et al.
U.S. Appl. No. 11/455,010, Jung et al.

"001_08 Comparison of Capsule Cameras: M2A (Given Imaging) vs. NORIKA3 (RF System lab)" RF System lab; bearing dates of 2001-2004; pp. 1-2; located at http://www.rfnorika.com/eng/system/sys_008.html; printed on May 4, 2006.

Agarwal, Abhishek K.; Atencia, Javier; Beebe, David J.; Jiang, Hongrui; "Magnetically-driven temperature-controlled microfluidic actuators"; pp. 1-5; located at: http://www unl.im.dendai.ac.jp/INSS2004/INSS2004_papers/OralPresentations/C2.pdf.

"Agile new plastics change shape with heat"; MIT News Office; Nov. 20, 2006; pp. 1-4; Massachusetts Institute of Technology; printed on Nov. 22, 2006; located at http://web.mit.edu/newsoffice/2006/triple-shape.html.

"Agile new plastics change shape with heat"; MIT Tech Talk; Nov. 22, 2006; p. 5 (1 page).

Ananthaswamy, Anil; "First robot moved by muscle power"; bearing a date of Feb. 27, 2004; pp. 1-3; New Scientist; located at http://www.newscientist.com/article.ns?id=dn4714; printed on Sep. 12, 2006.

Asari, Vijayan K.; Kumar, Sanjiv; Kassim, Irwan M.; "A Fully Autonomous Microrobotic Endoscopy System"; Journal of Intelligent and Robotic Systems; bearing a date of 2000; pp. 325-341; vol. 28; Kluwer Academic Publishers.

Behkam, Bahareh; Sitti, Metin; "Towards Hybrid Swimming Microrobots: Bacteria Assisted Propulsion of Polystyrene Beads"; Proceedings of the 28th IEEE EMBS Annual International Conference; bearing dates of Aug. 30, 2006-Sep. 3, 2006 and 2006; pp. 2421-2424; IEEE.

Berlinger, Norman T.; "Robotic Surgery—Squeezing into Tight Places"; New England Journal of Medicine; bearing dates of May 17, 2006, May 18, 2006, and 2006; pp. 2099-2101; Massachusetts Medical Society; located at www.nejm.org.

Bezrouk, A.; Hanuš, J.; Záhora, J.; "Temperature Characteristics of Nitinol Spiral Stents"; Scripta Medica (BRNO); bearing dates of Aug. 2005, Oct. 2005; pp. 219-226; vol. 78, No. 4.

Bialek, William; Rieke, Fred; De Ruyter Van Steveninck, Rob R.; Warland, David; "Reading a Neural Code"; Science; bearing a date of Jun. 28, 1991; pp. 1854-1857; vol. 252.

Bucher, Volker; Graf, Michael; Stelzle, Martin; Nisch, Wilfried; "Low-Impedance Thin-Film Polycrystalline Silicon Microelectrodes for Extracellular Stimulation and Recording";

(56) **References Cited**

OTHER PUBLICATIONS

Biosensors and Bioelectronics; bearing a date of 1999; pp. 639-649; vol. 14; Elsevier Science S.A.; located at: www.elsevier.com/locate/bios.
Butson, Christopher R.; McIntyre, Cameron C.; "Role of Electrode Design on the Volume of Tissue Activated During Deep Brain Stimulation"; Journal of Neural Engineering; bearing a date of 2006; vol. 3; pp. 1-8; IOP Publishing Ltd.
Chang, Suk Tai; Paunov, Vesselin N.; Petsev, Dimiter N.; Velev, Orlin D.; "Articles: Remotely Powered Self-Propelling Particles and Micropumps Based on Miniature Diodes"; Nature Materials; bearing a date of 2007; pp. 1-6; Nature Publishing Group; located at: www.nature.com/naturematerials.
Chen, Haitao; Ebner, Armin D.; Ritter, James A.; Kaminski, Michael D.; Rosengart, Axel J.; "Sequestration of Blood-Borne Magnetic Drug Carrier Particles Using Magnetizable Intravascular Stents"; Collaborative Investigators for Applied Nanotechnology in Medicine; pp. 1; Chicago, Illinois.
Chen, Ting; Barton, Scott Calabrese, Binyamin, Gary; Gao, Zhiqiang; Zhang, Yongchao, Kim, Hyug-Han; Heller, Adam; "A Miniature Biofuel Cell"; Journal of the American Chemical Society; Aug. 11, 2001; pp. 8630-8631; vol. 123; 2001 American Chemical Society.
Christensen, Bill; "Musclebot: Microrobot with a Heart"; Technovelgy.com; pp. 1-2; bearing a date of Feb. 27, 2004; located at http://www.technovelgy.com/ct/Science-Fiction-News.asp?NewsNum=46; printed on Sep. 12, 2006.
Christensen, Bill; "Propulsion System for 'Fantastic Voyage' Robot"; Technovelgy.com; pp. 1-4; Technovelgy.com; located http://www.technovelgy.com/ct/Science-Fiction-News.asp?NewsNum=811; printed on Jan. 4, 2007.
Costamagna; Guido M.D.; "PillCam™ SB Capsule Endoscopy"; GivenImaging.com; bearing dates of 2001-2006; pp. 1-4; located at http://www.givenimaging.com/Cultures/en-US/Given/English/Products/CapsuleEndoscopy/; printed on May 4, 2006.
Cui, Xinyan; Hetke, Jamille F.; Wiler, James A.; Anderson, David J.; Martin, David C.; "Electrochemical Deposition and Characterization of Conducting Polymer Polypyrrole/PPS on Multichannel Neural Probes"; Sensors and Actuators A Physical; bearing a date of 2001; pp. 8-18; vol. 93; Elsevier Science B.V.; located at: www.elsevier.com/locate/sna.
Dario, P.; Carrozza, M.C.; Lencioni, L.; Magnani, B.; D'Attanasio, S.; "A Micro Robotic System for Colonoscopy"; Proceedings of the 1997 IEEE International Conference on Robotics and Automation; bearing dates of Apr. 1997 and 1997; pp. 1567-1572; IEEE.
Dillier, Norbert; Lai, Wai Kong; Almqvist, Bengt; Frohne, Carolin; Müller-Deile, Joachim; Stecker, Matthias; Von Wallenberg, Ernst; "Measurement of the Electrically Evoked Compound Action Potential Via a Neural Response Telemetry System"; Annals of Otology Rhinology and Laryngology; bearing a date of May 2002; pp. 407-414; vol. 111, No. 5; Annals Publishing Company.
Dongxiang, Chi; Guozheng, Yan; "An earthworm based miniature robot for intestinal inspection"; Proceedings of SPIE; bearing dates of Nov. 7, 2001-Nov. 9, 2001; pp. 396-400; vol. 4601; SPIE.
Donoghue, John P.; "Review: Connecting Cortex to Machines: Recent Advances in Brain Interfaces"; Nature Neuroscience Supplement; bearing a date on Nov. 2002; pp. 1085-1088; vol. 5; Nature Publishing Group; located at: http://www.nature.com/natureneuroscience.
Fang, Zi-Ping; Mortimer, J. Thomas; "Selective Activation of Small Motor Axons by Quasitrapezoidal Current Pulses"; IEEE Transactions on Biomedical Engineering; bearing a date of Feb. 1991; pp. 168-174; vol. 38, No. 2; IEEE.
Fiaccabrino, G.C.; Tang, X.-M.; Skinner, N.; De Rooij, N. F.; Koudelka-Hep, M.; "Electrochemical Characterization of Thin-Film Carbon Interdigitated Electrode Arrays"; Analytica Chimica Acta; bearing a date of 1996; pp. 155-160; vol. 326; Elsevier Science B.V.
Freitas Jr., Robert A.; "8.2.1.2 Arteriocenous Microcirculation"; "9.4.3.5 Legged Ambulation"; "9.4.3.6 Tank-Tread Rolling"; "9.4.3.7 Amoeboid Locomotion"; "9.4.3.8 Inchworm Locomotion"; "Nanomedicine vol. I: Basic Capabilities"; bearing a date of 1999; pp. 211-214, pp. 316-318; Landes Bioscience; Georgetown, Texas, USA.
Gitter, Alfred H.; Fromm, Michael; Schulzke, Jörg-Dieter; "Impedance Analysis for the Determination of Epithelial and Subepithelial Resistance in Intestinal Tissues"; Journal of Biochemical and Biophysical Methods, bearing a date of 1998; pp. 35-46; vol. 37; Elsevier Science B.V.
Goda, Yukiko; Colicos, Michael A.; "Protocol: Photoconductive Stimulation of Neurons Cultured on Silicon Wafers"; Nature Protocols; bearing a date of 2006; pp. 461-467; vol. 1, No. 1; Nature Publishing Group; located at: http://www.nature.com/natureprotocols.
Gozani, Shai N.; Miller, John P.; "Optimal Discrimination and Classification of Neuronal Action Potential Waveforms from Multiunit, Multichannel Recordings Using Software-Based Linear Filters"; IEEE Transactions on Biomedical Engineering; bearing a date of Apr. 1994; pp. 358-372; vol. 41, No. 4; IEEE.
Gray, Charles M.; Maldonado, Pedro E.; Wilson, Mathew; McNaughton, Bruce; "Tetrodes Markedly Improve the Reliability and Yield of Multiple Single-Unit Isolation from Multi-Unit Recordings in Cat Striate Cortex"; Journal of Neuroscience Methods; bearing a date of 1995; pp. 43-54; vol. 63; Elsevier Science B.V.
Hagleitner, C.; Hierlemann, A.; Lange, D.; Kummer, A.; Kerness, N.; Brand, O.; Baltes, H.; "Smart single-chip gas sensor microsystem"; Nature; Nov. 15, 2001; pp. 293-296; vol. 414; Macmillan Magazines Ltd.; www.nature.com.
Hanna, Darrin M.; Oakley, Barbara A.; Stryker, Gabrielle A.; "Using a System-on-a-Chip Implantable Device to Filter Circulating Infected Cells in Blood or Lymph"; IEEE Transactions on Nanobioscience; bearing dates of Jan. 25, 2003, Mar. 2003; pp. 6-13; vol. 2, No. 1; IEEE.
Hodgkin, A.L.; Huxley, A.F.; "A Quantitative Description of Membrane Current and its Application to Conduction and Excitation in Nerve"; Journal of Physiology; bearing a date of 1952; pp. 500-544; vol. 117.
Høeg, H.D.; Slatkin, A.B.; Burdick, J.W.; Grundfest, Dr. Warren S.; "Biomechanical Modeling of the Small Intestine as Required for the Design and Operation of a Robotic Endoscope"; Proceedings ICRA '00 IEEE International Conference on Robotics and Automation; Apr. 24, 2000-Apr. 28, 2000; pp. 1-8; vol. 2.
Hofmann, U.G.; Folkers, A.; Mösch, F.; Höhl, D.; Kindlundh, M.; Norlin, P.; "A 64(128)-Channel Multisite Neuronal Recording System"; bearing a date of 2002; pp. 1-4.
Ikeuchi, K.; Yoshinaka, K.; Hashimoto, S.; Tomita, N.; "Locomotion of Medical Micro Robot with Spiral Ribs Using Mucus"; Seventh International Symposium on Micro Machine and Human Science; bearing a date of 1996; pp. 217-222; IEEE.
Inmann, Andreas; Haugland, Morten; Haase, Jens; Biering-Sørensen, Fin; Sinkjaer, Thomas; "NeuroReport: Signals from Skin Mechanoreceptors used in Control of a Hand Grasp Neuroprosthesis"; Motor Systems; bearing a date of Sep. 17, 2001; pp. 2817-2819; vol. 12, No. 13; Lippincott Williams & Wilkins.
Janders, M.; Egert, U.; Stelze, M.; Nisch, W.; "Novel Thin Film Titanium Nitride Micro-Electrodes with Excellent Charge Transfer Capability for Cell Stimulation and Sensing Applications"; IEEE Engineering in Medicine and Biology Society; bearing a date of 1996; pp. 245-247; IEEE.
"Japanese Researchers Unveil Medical Mini Robot"; Yahoo! News; bearing a date of Mar. 8, 2007; pp. 1-2; Yahoo! Inc.; located at: http://news.yahoo.com/s/afp/20070308/hl_afp/afplifestyleshealthscience; printed on Mar. 8, 2007.
Ji, Jin; Najafi, Khalil, Wise, Kensall D.; "A Low-Noise Demultiplexing System for Active Multichannel Microelectrode Arrays"; IEEE Transactions of Biomedical Engineering; bearing a date of Jan. 1991; pp. 77-81; vol. 38, No. 1; IEEE.
Kassim, Irwan; Phee, Louis; Ng, Wan S.; Gong, Feng; Dario, Paolo; Mosse, Charles A.; "Locomotion Techniques for Robotic Colonoscopy"; IEEE Engineering in Medicine and Biology Magazine; bearing dates of May/Jun. 2006 and 2006; pp. 49-56; IEEE.

(56) **References Cited**

OTHER PUBLICATIONS

Kennedy, P.R.; Bakay, R.A.E.; Moore, M.M.; Adams, K.; Goldwaithe, J.; "Direct Control of a Computer from the Human Central Nervous System"; IEEE Transactions on Rehabilitation Engineering; bearing a date of Jun. 2000; pp. 198-202; vol. 8, No. 2; IEEE.
Kobetic, Rudi; Triolo, Ronald J.; Uhlir, James P.; Bieri, Carole; Wibowo, Michael; Polando, Gordie; Marsolais, E. Byron; Davis Jr., John A.; Ferguson, Kathleen A.; Sharma, Mukut; "Implanted Functional Electrical Stimulation System for Mobility in Paraplegia: A Follow-Up Case Report"; IEEE Transactions on Rehabilitation Engineering; bearing a date of Dec. 1999; pp. 390-398; vol. 7, No. 4; IEEE.
Krueger, Curtis; "New light on blood testing"; Oct. 20, 2006; pp. 1-2; St. Petersburg Times; printed on Dec. 24, 2006; located at http://www.sptimes.com/2006/10/20news_pf/Tampabay/New_light_on_blood_te.shtml.
Loeb, Gerald E.; Peck, Raymond A.; Moore, William H.; Hood, Kevin; "BION System for Distributed Neural Prosthetic Interfaces"; Medical Engineering and Physics; bearing a date of 2001; pp. 9-18; vol. 23; Elsevier Science Ltd.; located at: www.elsevier.com/locate/medengphy.
Loeb, G.E.; Peck, R.A.; Martyniuk, J.; "Toward the Ultimate Metal Microelectrode"; Journal of Neuroscience Methods; bearing a date of 1995; pp. 175-183; vol. 63; Elsevier Science B.V.
Lu, Zhao; Martel, Sylvain; "Preliminary Investigation of Biocarriers Using Magnetotactic Bacteria"; Proceedings of the 28th IEEE EMBS Annual International Conference; bearing dates of Aug. 30, 2006-Sep. 3, 2006 and 2006; pp. 3415-3418; IEEE.
Mangan, Elizabeth V.; Kingsley, Dan A.; Quinn, Roger D.; Chiel, Hillel J.; "Development of a Peristaltic Endoscope"; IEEE International Conference on Robotics & Automation 2002; pp. 1-6; located at http://biorobots.cwru.edu/publications/ICRA02_Mangan_Endoscope.pdf.
Marks, William B.; Loeb, Gerald E.; "Action Currents, Internodal Potentials, and Extracellular Records of Myelinated Mammalian Nerve Fibers Derived from Node Potentials"; Biophysical Journal; 1976; pp. 655-668; vol. 16.
Martel, Sylvain; "Fundamentals of high-speed piezo-actuated three-legged motion for miniature robots designed for nanometer-scale operations"; pp. 1-8.
Martel, Sylvain; "Towards MRI-Controlled Ferromagnetic and MC-1 Magnetotactic Bacterial Carriers for Targeted Therapies in Arteriolocapillar Networks Stimulated by Tumoral Angiogenesis"; Proceedings of the 28th IEEE EMBS Annual International Conference; bearing dates of Aug. 30, 2006-Sep. 3, 2006 and 2006; pp. 3399-3402; IEEE.
Mathieu, J-B.; Martel, S.; Yahia, L'H.; Soulez, G.; Beaudoin, G.; "MRI Systems as a Mean of Propulsion for a Microdevice in Blood Vessels"; bearing a date of 2003; pp. 3419-3422; IEEE.
Matsui, Takemi; Matsumura, Kouji; Hagisawa, Kousuke; Ishihara, Masayuki; Ishizuka, Toshiaki; Suzuki, Minoru; Kurita, Akira; Kikuchi, Makoto; "A Novel Ferromagnetic Thermo-Stent for Plaque Stabilization That Self-Regulates the Temperature"; IEEE Transactions on Biomedical Engineering; bearing dates of Jun. 2002 and 2002; pp. 621-623; vol. 49, No. 6; IEEE.
McNeal, Donald R.; "Analysis of a Model for Excitation of Myelinated Nerve"; IEEE Transactions on Biomedical Engineering; bearing a date of Jul. 1976; pp. 329-337; vol. BME-23, No. 4.
Meier, P.; Oberthür, S.; Lang, M.; "Development of a compliant device for minimally invasive surgery"; Proceedings of the 28th IEEE EMBS Annual International Conference; bearing dates of Aug. 30, 2006-Sep. 3, 2006 and 2006; pp. 331-334; IEEE.
"MEMS at the cutting edge®, Patent Pending"; Verimetra; pp. 1-2; located at http://www.verimetra.com/flow.htm; printed on May 4, 2006.
Menciassi, A.; Park, Jong H.; Lee, S.; Gorini, S.; Dario, P.; Park, Jong-Oh; "Robotic Solutions and Mechanisms for a Semi-Autonomous Endoscope"; Proceedings of the 2002 IEEE/RSJ International Conference on Intelligent Robots and Systems; bearing a date of 2002; pp. 1379-1384; IEEE.
Mohseni, Kamran; "Biomimetic & Bio-Inspired Aerial and Underwater Vehicles"; bearing a date of Sep. 23, 2006; pp. 1-10; printed on Jan. 4, 2007; located at http://enstrophy.colorado.edu/~mohseni/MicroVehicles1.html#UUV1#UUV1.
Mosse, Charles; Mills, Tim; Appleyard, Mark; Swain, Paul; "Electrostimulation to move endoscopes in the small bowel"; Proceedings of SPIE; bearing a date of 2001; pp. 24-28; vol. 4158.
Murthy, S. Narasimha; Hiremath, Shobha Rani R.; "Physical and Chemical Permeation Enhancers in Transdermal Delivery of Terbutaline Sulphate"; AAPS PharmSciTech; bearing a date of 2001; pp. 1-5; vol. 2001, 2(1); Technical Note 1; located at http://www.pharmscitech.com/.
Nakayama, Yasuhide; Ji-Youn, Kim; Nishi, Shogo; Ueno, Hikaru; Matsuda, Takehisa; "Development of high-performance stent: gelatinous photogel-coated stent that permits drug delivery and gene transfer"; J Biomed Mater Res; bearing dates of Nov. 13, 2000, Apr. 23, 2001, May 10, 2001 and 2001; pp. 559-566; vol. 57; John Wiley & Sons, Inc.
Naqvi, Nasir H.; Rudrauf, David; Damasio, Hanna; Bechara, Antoine; "Damage to the Insula Disrupts Addiction to Cigarette Smoking"; Science; bearing a date of Jan. 26, 2007; pp. 531-534, plus additional cover page; vol. 315, No. 531; located at: www.sciencemag.org; printed on Jan. 25, 2007.
Neto, A.M. Figueiredo; Godinho, M.H.; Toth-Katona, T.; Palffy-Muhoray, P.; "Optical, Magnetic and Dielectric Properties of Non-Liquid Crystalline Elastomers Doped with Magnetic Colloids"; Brazilian Journal of Physics; Bearing a date of Mar. 2005; pp. 184-189; vol. 35, No. 1.
"New Medical Device Combines Wireless and MEMS Technology"; Georgia Institute of Technology; pp. 1-4; PhysOrg.com; located at: http://www.physorg.com/printnews.php?newsid=10533; printed on Feb. 20, 2006.
Nieuwenhuizen-Berkovits, P.; "lubrelastic medical appliances"; Lubrelastic Medical Appliances; pp. 1-4; located at: http://www.xs4all.nl/~plien070/caeng.html; printed on Feb. 20, 2006.
Nyitrai, Zsolt; Illyefalvi-Vitéz, Zsolt; Pinkola, János; "Preparing Stents with Masking & Etching Technology"; 26th International Spring Seminar on Electronics Technology; bearing dates of May 8, 2003-May 11, 2003 and 2003; pp. 321-324; IEEE.
Olsson III, R.H.; Gulari, M.N.; Wise, K.D.; "Poster 114: Silicon Neural Recording Arrays with On-Chip Electronics for In-Vivo Data Acquisition"; Microtechnologies in Medicine and Biology; bearing dates of May 2, 2002-May 4, 2002; pp. 237-240; IEEE.
Oweiss, Karim G.; Anderson, David J.; "A New Technique for Blind Source Separation Using Subband Subspace Analysis in Correlated Multichannel Signal Environments"; bearing a date of 2001; pp. 2813-2816; IEEE.
Patronik, N.A.; Ota, T.; Zenati, M.A.; Riviere, C.N.; "Improved Traction for a Mobile Robot Traveling on the Heart"; Proceedings of the 28th IEEE EMBS Annual International Conference; bearing dates of Aug. 30, 2006-Sep. 3, 2006 and 2006; pp. 339-342; IEEE.
Peckham, P. Hunter; Knutson, Jayme S.; "Functional Electrical Stimulation for Neuromuscular Applications"; Annual Review Biomedical Engineering; bearing a date of 2005; pp. 327-360; vol. 7; Annual Reviews.
Rattay, Frank; "Analysis of Models for Extracellular Fiber Stimulation"; IEEE Transactions on Biomedical Engineering; bearing a date of Jul. 1989; pp. 676-682; vol. 36, No. 7; IEEE.
Rattay, Frank, Aberham, Matthias; "Modeling Axon Membranes from Functional Electrical Stimulation"; IEEE Transactions on Biomedical Engineering; bearing a date of Dec. 1993; pp. 1201-1209; vol. 40, No. 12; IEEE.
"Remote-Control Electrostimulation Capsule"; Popular Science; bearing dates of 2002 and 2003; pp. 1-2; located at http://www.popsci.com/popsci/brown/2003/article/0,18881,537028,00.html; printed on May 4, 2006.
"Researchers: Squid-Inspired Vortex Generators Could Mean Better Propulsion for Unmanned Underwater Vehicles"; UnderwaterTimes.com; Dec. 12, 2006; pp. 1-2; UnderwaterTimes.

(56) **References Cited**

OTHER PUBLICATIONS

com; printed on Jan. 4, 2007; located at http://www.underwatertimes.com/print.php?article_id=51030782641.
Rice, Mike; "Implantable Neurostimulation Device Market Poised for Explosive Growth"; Future Fab International; Jan. 7, 2006; pp. 1-4; printed on Oct. 6, 2006; located at http://www.future-fab.com/documents.asp?d_ID=3725.
Rice, Mike; "New Products, Emphasis on Miniaturization Driving Medical Device Innovation"; bearing a date Aug. 23, 2006; pp. 1-3; Advantage Business Media; located at http://www.mdtmag.com/scripts/ShowPR.asp?PUBCODE=046&ACCT=0006109&ISSUE=0603&RELTYPE=PR&PRODCODE=0790 &PRODLETT=A; printed on Aug. 23, 2006.
Riedmüller, J.; Bolz, A.; Rebling, H.; Schaldach, M.; "Improvement of Stimulation and Sensing Performance of Bipolar Pacemaker Leads"; IEEE Eng. Med. Biol. Soc.; 1992; pp. 2364-2365; IEEE.
Robinson, David A.; "The Electrical Properties of Metal Microelectrodes"; Proceedings of the IEEE; bearing a date of Jun. 1968; pp. 1065-1071; vol. 56, No. 6.
Rousche, Patrick J.; Pellinen, David S.; Pivin, David P.; Williams, Justin C.; Vetter, Rio J.; Kipke, Daryl R.; "Flexible Polyimide-Based Intracortical Electrode Arrays with Bioactive Capability"; IEEE Transactions on Biomedical Engineering; bearing a date Mar. 2001; pp. 361-371; vol. 48, No. 3; IEEE.
Rutten, Wim; Mouveroux, Jean-Marie; Buitenweg, Jan; Heida, Ciska; Ruardij, Teun; Marani, Enrico; Lakke, Egbert; "Neuroelectronic Interfacing with Cultured Multielectrode Arrays Toward a Cultured Probe"; Proceedings of the IEEE; bearing a date of Jul. 2001; pp. 1013-1029; vol. 89, No. 7; IEEE.
Saltzman, John R.; "Endoscopic Advances—A View Toward the Future"; bearing dates of May 4, 2006, 2005 and 1994-2006; pp. 1-4; Medscape; located at http://www.medscape.com/viewarticle/505100; printed on May 4, 2006.
Schmidt, W.; Behrens, P.; Behrend, D.; Schmitz, K.-P.; Andresen, R.; "Experimental Study of Peripheral, Balloon-expandable Stent Systems"; Progress in Biomedical Research; pp. 246-255; bearing a date of May 2001.
Schoonhoven, R.; Stegeman, D.F.; "Models and Analysis of Compound Nerve Action Potentials"; Critical Reviews in Biomedical Engineering; bearing a date of 1991; pp. 47-111; vol. 19, No. 1; CRC Press, Inc.
Senel, Sevda; Hincal, A. Atilla; "Drug permeation enhancement via buccal route: possibilities and limitations"; Journal of Controlled Release; bearing a date of 2001; pp. 133-144; vol. 72 (2001); Elsevier; located at www.elsevier.com/locate/jconrel.
Serruya, Mijail D.; Hatsopoulos, Nicholas G.; Paninski, Liam; Fellows, Matthew R.; Donoghue, John P.; "Brief Communications: Instant Neural Control of a Movement Signal"; Nature; bearing a date of Mar. 14, 2002; pp. 141-142; vol. 416; Macmillan Magazines Ltd; located at: www.nature.com.
Serruys, Patrick W.; Kutryk, Michael J.B.; Ong, Andrew T.L.; "Coronary-Artery Stents"; The New England Journal of Medicine; bearing dates of Feb. 2, 2006 and Feb. 15, 2006; pp. 483-495; vol. 354;5; Massachusetts Medical Society.
Shabalovskaya, Svetlana, A.; "Surface, corrosion and biocompatibility aspects of Nitinol as an implant material"; Bio-Medical Materials and Engineering; bearing dates of Apr. 4, 2001, and 2002; pp. 69-109; vol. 12; IOS Press.
Shahinpoor, Mohsen; Kim, Kwang J.; Ionic polymer-metal composites: IV. Industrial and medical applications; Smart Materials and Structures; 2005; pp. 197-214; vol. 14; Institute of Physics Publishing.
Snoek, GJ; Ijzerman, MJ; In 'T Groen, FACG; Stoffers, TS; Zilvold, G; "Use of the NESS Handmaster to Restore Handfunction in Tetraplegia: Clinical Experiences in Ten Patients"; Spinal Cord; bearing a date of 2000; pp. 244-249; vol. 38; International Medical Society of Paraplegia.
Snow, E.S.; Perkins, F.K.; Houser, E.J.; Badescu, S.C.; Reinecke, T. L.; "Chemical Detection with a Single-Walled Carbon Nanotube Capacitor"; Science; Mar. 25, 2005; pp. 1942-1945; vol. 307; www.sciencemag.org.
Stoeckel, Dieter; Pelton, Alan; Duerig, Tom; "Self-expanding nitinol stents: material and design considerations"; European Radiology; bearing dates of Jan. 28, 2003, May 22, 2003, Jul. 1, 2003, Sep. 3, 2003, Feb. 2004 and 2004; pp. 292-301(1-2); vol. 14, No. 2; Springer-Verlag GmbH-SpringerLink—Article; located at: http://www.springerlink.com/(1begg455gtgjfseqqptyb43m)/app/home/contribution.asp?referrer=parent &backto=issue,17,26;journal,27,147;browsepublicationsresults,444,1551; printed on Feb. 22, 2006.
Strauss, Bradley H., M.D., Ph.D.; Li, Chris, M.D.; Whittingham, Heather A., M.Sc; Tio, Fermin O., M.D.; Kutryk, Michael J.B., M.D., Ph.D.; Janicki, Christian, Ph.D.; Sparkes, John, D., M.Sc.; Turnlund, Todd, B.Sc.; Sweet, William L., M.D.; "Late Effects of Low-Energy Gamma-Emitting Stents in a Rabbit Iliac Artery Model"; Int. J. Radiation Oncology Biol. Phys.; bearing dates of Oct. 23, 2001, May 13, 2002 and May 15, 2002 and 2002; pp. 551-561; vol. 54, No. 2; Elsevier Science Inc.
Struijk, Johannes Jan; "The Extracellular Potential of a Myelinated Nerve Fiber in an Unbounded Medium and in Nerve Cuff Models"; Biophysical Journal; bearing a date of Jun. 1997; pp. 2457-2469; vol. 72; Biophysical Society.
Taylor, Dawn M.; Helms Tillery, Stephen I.; Schwartz, Andrew B.; "Research Article: Direct Cortical Control of 3D Neuroprosthetic Devices"; Science; bearing a date of Jun. 7, 2002; pp. 1829-1832; vol. 296; located at: www.sciencemag.org.
"Tiny Robot Reduces Need for Surgery"; Pink Tentacle; bearing a date of Feb. 26, 2007; p. 1; located at: http://www.pinktentacle.com/2007/02/tiny-robot-reduces-need-for-surgery; printed on Mar. 8, 2007.
"Trying to control pain can be a double-edged sword, say scientists"; PhysOrg.com; printed on Nov. 2, 2006; pp. 1-2; located at http://www.physorg.com/printnews.php?newsid=81599312.
Tummala, R. Lal; Mukherjee, R.; Aslam, D.; Xi, Ning; Mahadevan, S.; Weng, J.; "Reconfigurable Adaptable Micro-robot"; IEEE; bearing a date of 1999; pp. 687-691.
Twardoch, U.M.; "Integrity of Ultramicro-Stimulation Electrodes Determined from Electrochemical Measurements"; Journal of Applied Electrochemistry; bearing a date of 1994; pp. 835-857; vol. 24; Chapman & Hall.
Warland, David K.; Reinagel, Pamela; Meister, Markus; "Decoding Visual Information from a Population of Retinal Ganglion Cells"; bearing a date of 1997; pp. 2336-2350; The American Physiological Society.
Weis, Rolf; Müller, Bernt; Fromherz, Peter; "Neuron Adhesion on a Silicon Chip Probed by an Array of Field-Effect Transitors"; Physical Review Letters; bearing a date of Jan. 8, 1996; pp. 327-330; vol. 76, No. 2; The American Physical Society.
Wessberg, Johan; Stambaugh, Christopher R.; Kralik, Jerald D.; Beck, Pamela D.; Laubach, Mark; Chapin, John K.; Kim, Jung; Biggs, S. James; Srinivasan, Mandayam A.; Nicolelis, Miguel A.L.; "Letters to Nature: Real-Time Prediction of Hand Trajectory by Ensembles of Cortical Neurons in Primates"; Nature; bearing a date of Nov. 16, 2000; pp. 361-365; vol. 408; Macmillan Magazines Ltd; located at: www.nature.com.
White, Dave; "Mini Robot Explores, Gives you Medicine from Within"; Mobile Magazine; bearing a date of Feb. 27, 2007; p. 1; located at: http://www.mobilemag.com/content/100/313/C11869/; printed on Mar. 8, 2007.
Yusa, Go; Muraki, Koji; Takashina, Kei; Hashimoto, Katsushi; Hirayama, Yoshiro; "Controlled multiple quantum coherences of nuclear spins in a nanometre-scale device"; Nature; Apr. 21, 2005; pp. 1001-1005; vol. 434; 2005 Nature Publishing Group; www.nature.com/nature.
"Zyvex NanoEffector Microgrippers"; Nanotechnology at Zyvex; printed on Dec. 7, 2006; pp. 1-2; located at http://www.zyvex.com/Products/Grippers_Features.html.
"Zyvex NanoEffector Microgrippers"; Zyvex.com; bearing a date of 2006; pp. 1-2; Zyvex Corporation.

(56) **References Cited**

OTHER PUBLICATIONS

UK Intellectual Property Office Examination Report Under Section 18(3); App. No. GB0821519.6; Nov. 12, 2009; 1-4.
UK Intellectual Property Office Examination Report Under Section 18(3); App. No. GB0821526.1; Nov. 11, 2009; 1-5.
UK Intellectual Property Office Examination Report Under Section 18(3); App. No. GB0706802.6; Nov. 23, 2009; pp. 1-2.
Japanese Office Action; Japanese App. No. 2007-533572; Sep. 22, 2010 (received by our Agent on Sep. 28, 2010); pp. 1-4; (no English translation currently available).
UK Intellectual Property Office Examination Report Under Section 18(3); App. No. GB0821524.6; Aug. 9, 2010 (received by our Agent on Aug. 10, 2010); pp. 1-2.
UK Intellectual Property Office Examination Report Under Section 18(3); App. No. GB0821519.6; Aug. 9, 2010 (received by our Agent on Aug. 10, 2010); pp. 1-3.
UK Intellectual Property Office Examination Report under Section 18(3); App. No. GB0821521.2; Jan. 12, 2011; pp. 1-4.
UK Intellectual Property Office Examination Report Under Section 18(3); App. No. GB0821519.6; Oct. 19, 2010; 1 page.
U.S. Appl. No. 12/928,455, Wood, Jr., Lowell L.
UK Intellectual Property Office Examination Report Under Section 18(3); App. No. GB0821530.3; Aug. 27, 2010 (received by our Agent on Sep. 3, 2010); pp. 1-6.
UK Intellectual Property Office Combined Search and Examination Report Under Sections 17 & 18(3); App. No. GB1016383.0 ; Nov. 1, 2010; pp. 1-4.
U.S. Appl. No. 12/930,916, Wood, Jr., Lowell.
Arkin, Ronald C.; "Towards the Unification of Navigational Planning and Reactive Control"; Working Notes of the AAAI Spring Symposium on Robot Navigation; bearing dates of Mar. 20-28, 1989; pp. 1-6.
Arleo et al.; "Spatial Cognition and Neuro-Mimetic Navigation: A Model of Hippocampal Place Cell Activity"; bearing a date of Oct. 28, 1999; pp. 1-13.
Balakrishnan et al.; "Spatial Learning and Localization in Rodents: A Computational Model of the Hippocampus and its Implications for Mobile Robots"; Adaptive Behavior; bearing a date of 1999; pp. 173-216 plus cover page; vol. 7, No. 2; SAGE Publications.
Bellin et al.; "Polymeric triple-shape materials"; PNAS; bearing dates of Nov. 18, 2006 and 2006; pp. 18043-18047; vol. 103, No. 48; The National Academy of Sciences of the USA; located at www.pnas.org/cgi/doi/10.1073/pnas.0608586103.
Berman et al.; "Decentralized Autonomous AGV System for Material Handling"; iFirst; bearing a date of Oct. 2002; pp. 3995-4006 (Only the Abstract is being provided); vol. 40, No. 15; located at: bttp://www.informaworld.com/smpp/
content~content=a713846479~db=ai; printed on Apr. 24, 2007.
Bianco et al.; "Carbon Nanotube-based Vectors for Delivering Immunotherapeutics and Drugs"; Nanotechnologies for the Live Sciences: Nanomaterials for Medical Diagnosis and Therapy; bearing a date of 2007; Chapter 3; pp. 85-142.; vol. 10; WILEY-VCH Verlag GmbH & Co. KGaA; Weinheim.
Breslin et al.; "Autofluorescence and Diffuse Reflectance Properties Malignant and Benign Breast Tissues"; Annals of Surgical Oncology; bearing dates of 2003 and 2004; pp. 65-70; vol. 11, No. 1; Lippincott Williams & Wilkin.
Bright et al.; "Automated Pipe Inspection Robot"; Industrial Robot: An International Journal; bearing a date of Aug. 1997; pp. 285-289 (Only the Abstract is being provided); vol. 24, No. 4; located at: http://www.emeraldinsight.com/10.1108/01439919710176372; printed on Apr. 23, 2007.
Brinn, David; "A incredible journey from an Israeli robotics team"; ISRAEL21c: A Focus Beyond; bearing a date of Nov. 12, 2006; pp. 1-3; ISRAEL21c.org.
Brown et al.; "Performance Test Results of an Integrated GPS/MEMS Inertial Navigation Package"; Proceedings of ION GNSS 2004, bearing a date of Sep. 2004; pp. 1-8.
Budgett et al.; "Novel technology for the provision of power to implantable physiological devices"; Journal of Applied Physiology; bearing dates of Jan. 27, 2006, Jan. 5, 2007, and 2007; pp. 1658-1663; vol. 102; The American Physiological Society.
Bullitt et al.; "Analysis of Time-Varying Images Using 3D Vascular Models"; Proceedings 30th Applied Imagery Pattern Recognition Workshop; bearing a date of Apr. 2001; pp. 9-14; IEEE Computer Society; Piscataway, NJ.
Burke et al.; "Towards a single-chip, implantable RFID system: is a single-cell radio possible?"; Biomed Microdevices; bearing a date of 2009; pp. 1-8; Springer.
Cady et al.; "Optimized linkage and quenching strategies for quantum dot molecular beacons"; Molecular and Cellular Probes; bearing dates of Jul. 5, 2006, Sep. 7, 2006, Sep. 17, 2006, 2006, and 2007; pp. 116-124; vol. 21; Elsevier Ltd.
Cavalcanti et al.; "Autonomous Multi-Robot Sensor-Based Cooperation for Nanomedicine"; Nanotechnology Special Edition; bearing a date of Aug. 2002; pp. 1-4; International Journal of Nonlinear Science and Numerical Stimulation.
Chen et al.; "Review on the Achievements in Simultaneous Localization and Map Building for Mobile Robot" CSA Illumina; bearing a date of Jun. 2005; pp. 455-460 (Only the Abstract is being provided); vol. 22, No. 3; ProQuest-CSA LLC; located at: http://mdl.csa.com/partners/viewrecord.php?requester=gs
&collection=TRD&recid=A056354818AH
&recid=2005134422784EA
&q=Review+on+the+Achievements+in+Simultaneous+Localization+and+Map+Building+for+
Chiyo et al.; "Effective detection of bronchial preinvasive lesions by a new autofluorescence imaging bronchovideoscope system"; Lung Cancer; bearing dates of May 12, 2004, Nov. 17, 2004, Nov. 23, 2004, 2004, and 2005; pp. 307-313; vol. 48; Elsevier Ireland Ltd.
Chung et al.; "Advanced Optical Imaging Requiring No Contrast Agents—A New Armamentarium for Medicine and Surgery"; Current Surgery; bearing dates of May/Jun. 2005 and 2005; pp. 365-370; vol. 62, No. 3; Elsevier Inc.
Dacosta et al.; "Autofluorescence characterisation of isolated whole crypts and primary cultured human epithelial cells from normal, hyperplastic, and adenomatous colonic mucosa"; Journal of Clinical Pathology; bearing dates of 2004 and 2005; pp. 766-774; vol. 58.
Degani et al.; "Minimalistic, Dynamic, Tube Climbing Robot"; 2010 IEEE International Conference on Robotics and Automation; bearing dates of May 3-8, 2010 and 2010; pp. 1100-1101; IEEE.
Desouza et al.; "Vision for Mobile Robot Navigation: A Survey"; IEEE Transactions on Pattern Analysis and Machine Intelligence; bearing a date of Feb. 2002; pp. 237-267 (Only the Abstract is being provided); vol. 24, No. 2; located at: http://csdl2.computer.org/persagen/DLAbsToc.jsp?resourcePath=/dl/trans/tp/&toc=comp/trans/tp/2002/02/i2toc.xml&DOI=10.1109/34.982903; printed on Apr. 23, 2007.
Diard et al.; "A theoretical comparison of probabilistic and biomimetic models of mobile robot navigation"; Proceedings of the 2004 IEEE International Conference on Robotics & Automation; bearing dates of Apr. 2004 and 2004; pp. 933-938; IEEE.
Dweik et al.; "Exhaled breath analysis: the new frontier in medical testing"; Journal of Breath Research; bearing a date of 2008; pp. 1-3; vol. 2; IOP Publishing Ltd; UK.
Edwards, Lin; "Spider pill to seek out disease"; PhysOrg.com; bearing dates of Oct. 16, 2009 and 2009; p. 1.
Eker et al.; "Clinical spectral characterisation of colonic mucosal lesions using autofluorescence and δ aminolevulinic acid sensitization"; Gut; bearing dates of 1998 and 1999; pp. 511-518; vol. 44.
Eulenstein et al.; "Ultrasound-Based Navigation System Incorporating Preoperative Planning for Liver Surgery"; International Congress Series CARS 2004—Computer Assisted Radiology and Surgery, Proceedings of the 18th International Congress and Exhibition; bearing a date of 2004; pp. 758-763; vol. 1268.
Filliat et al.; "Map Based Navigation in Mobile Robots: I. A Review of Localization Strategies"; Science Direct—Cognitive Systems Research; bearing dates of Feb. 12, 2003 and Dec. 2003; pp. 1-58; vol. 4, No. 4; Elsevier Science.
Foxlin et al.; "Miniature 6-DOF inertial system for tracking HMDs"; Helmet and Head-Mounted Displays III, AeroSense 98; bearing dates of Apr. 13-14, 1998; pp. 1-15; vol. 3362; SPIE.
Gabrecht et al.; "Detection of early bronchial cancer by autofluorescence: results in patients with H&N cancer"; Diagnostic

(56) **References Cited**

OTHER PUBLICATIONS

Optical Spectroscopy in Biomedicine IV, Proc. SPIE-OSA Biomedical Optics; bearing a date of 2007; pp. 1-8; vol. 6628; SPIE-OSA.
Gao et al., "A Micro Sensing Probe for Detecting Individual Biological Cells"; Proceedings of the 25th Annual International Conference of the IEEE EMBS; bearing dates of Sep. 17-21, 2003 and 2003; pp. 3348-3351; IEEE.
Gillenwater et al.; "Noninvasive Diagnosis of Oral Neoplasia Based on Fluorescence Spectroscopy and Native Tissue Autofluorescence"; Archives of Otolaryngology—Head & Neck Surgery; bearing a date of Nov. 1998 and 1998; pp. 1251-1258; vol. 124.
Grifantini, Kristina; "Voyage of the Bacteria Bots"; Technology Review; bearing a date of Oct. 31, 2008; pp. 1-4; Technology Review.
Groothuis et al.; "The entry of antiviral and antiretroviral drugs into the central nervous system"; Journal of NeuroVirology; bearing a date of 1997; pp. 387-400; vol. 3; Journal of NeuroVirology, Inc.
"Guessing Robots Predict Their Environments, Navigate Better"; PhysOrg.com; printed on Sep. 16, 2008; pp. 1-2; original story found at www.phyorg.com/news100887209.html.
Gur, Amir; "The Nanobots are Coming"; TFOT; bearing a date of Jul. 9, 2007; pp. 1-2; The Future of Things.
Hattori, Kevin; "Robot Can Crawl Through Human Body"; American Technion Society; bearing a date of Jul. 7, 2009; pp. 1-2; American Technion Society; located at http://www.ats.org/site/News2?page=NewsArticle&id=6063&news_iv_ctrl=1161 &printer_friendly=1.
Herth et al.; "Successful Bronchoscopic Placement of Tracheobronchial Stents Without Fluoroscopy"; Chest; bearing a date of Jun. 2001; pp. 1910-1912; vol. 119, No. 6; American College of Chest Physicians.
Hertzberg et al.; "Landmark-Based Autonomous Navigation in Sewerage Pipes"; Proceedings of EUROBOT; bearing a date of 1996; pp. 68-73; IEEE.
Hirsch et al.; "A new device with PZT ultrasonic transducers in MEMS technology"; Journal of Physics: Conference Series 34, International MEMS Conference 2006; bearing a date of 2006; pp. 475-480; IOP Publishing Ltd.
Hollings et al.; "Diagnostic imaging of lung cancer"; European Respiratory Journal; bearing a date of 2002, pp. 722-742; vol. 19; ERS Journals Ltd.
Hornyak, Tim; "RFID Powder"; Scientific American Magazine; bearing dates of Feb. 2008 and 2008; pp. 68-71; Scientific American, Inc.
Hosseini-Khayat, Saied; "A Lightweight Security Protocol for Ultra-low Power ASIC Implementation for Wireless Implantable Medical Devices"; 2011 Symposium on Medical Information and Communication Technology (ISMICT); bearing dates of 2011 and Mar. 27-30, 2011; pp. 6-9; IEEE.
Howell et al.; "Practical Mobile Robot Self-Localization"; Proceedings of the IEEE International Conference on Robotics and Automation, 2000; bearing dates of Apr. 24-28, 2000; pp. 3485-3492; vol. 4.
Jaiswal et al.; "Long-term multiple color imaging of live cells using quantum dot bioconjugates"; Nature Biotechnology; bearing dates of Jan. 2003 and 2003; pp. 47-51; vol. 21; Nature Publishing Group.
Jovanov et al.; "A wireless body area network of intelligent motion sensors for computer assisted physical rehabilitation"; Journal of NeuroEngineering and Rehabilitation; bearing dates of Mar. 1, 2005, Jan. 28, 2005, Mar. 1, 2005, and 2005; pp. 1-10; vol. 2, No. 6; BioMed Central Ltd.
Karino et al.; "Flow Patterns in Vessels of Simple and Complex Geometries"; Annals of the New York Academy of Sciences; bearing a date of 1987; pp. 422-441; vol. 516.
Kawaguchi et al.; "Internal Pipe Inspection Robot"; IEEE Xplore; bearing dates of May 21, 1995-May 27, 1995 and 2005; pp. 857-862 (Only the Abstract is being provided); vol. 1; IEEE; located at: http://ieeexplore.ieee.org/xpls/abs_all.jsp?rnumber=525390; printed on Apr. 23, 2007.
Kharitonov et al.; "Exhaled Markers of Pulmonary Disease"; American Journal of Respiratory and Critical Care Medicine; bearing dates of Sep. 5, 2000, Jan. 24, 2001, and 2001; pp. 1693-1722; vol. 163.
Kim et al.; "Inchworm-Like Microbot for Capsule Endoscope"; Proceedings of the 2004 IEEE International Conference on Robotics and Biomimetics; bearing dates of Aug. 22-26, 2004 and 2004; pp. 458-463; IEEE.
Kim et al.; "Ultrasensitive carbon nanotube-based biosensors using antibody-binding fragments"; Analytical Biochemistry; bearing a date of 2008; pp. 193-198; vol. 381; Elsevier Inc.
Kirchner et al.; "A Prototype Study of an Autonomous Robot Platform for Sewerage System Maintenance"; Autonomous Robots; bearing a date of 1997; pp. 319-331; vol. 4; Kluwer Academic Publishers.
Kitaoka et al.; "A three-dimensional model of the human airway tree"; Journal of Applied Physiology; bearing a date of 1999; pp. 2207-2217; vol. 87; The American Physiological Society.
Kitching, John; "Time for a Better Receiver: Chip-Scale Atomic Frequency References"; GPS World; bearing a date of Nov. 2007; pp. 52-57.
Knappe, Svenja; "Emerging Topics: MEMS Atomic Clocks"; Comprehensive Microsystems; bearing a date of 2007; pp. 571-612; vol. 3; Elsevier B.V.; Netherlands.
Koenig et al.; "Laser-Induced Autofluorescence for Medical Diagnosis"; Journal of Fluorescence; bearing a date of 1994, pp. 17-40; vol. 4, No. 1; Plenum Publishing Corporation.
Kuipers et al.; "A Robot Exploration and Mapping Strategy Based on a Semantic Hierarchy of Spatial Representations"; Robotics and Autonomous Systems; bearing a date of 1981; pp. 47-63; vol. 8; Elsevier Science Publishers B.V.
Kuntze et al.; "Experiences With the Development of a Robot for Smart Multisensoricpipe Inspection"; IEEE Xplore; bearing dates of May 16, 1998-May 20, 1998 and 2005; pp. 1773-1778 (Only the Abstract is being provided); vol. 2; IEEE; located at: http://ieeexplore.ieee.org/xpls/abs_all.jsp?rnumber=677423; printed on Apr. 23, 2007.
Latombe, Jean-Claude; "Chapter 1: Introduction and Overview"; Robot Motion Planning; bearing a date of 1991; 11 pages total, pp. 12-20; Kluwer Academic Publishers.
Laumond et al.; "Robot Motion Planning and Control"; bearing a date of 1998; pp. 1-343 plus cover page, foreword and table of contents (353 total pages); Springer.
Leong et al.; "Tetherless thermobiochemically actuated microgrippers"; PNAS; bearing dates of Jan. 20, 2009 and 2009; pp. 703-708; vol. 106, No. 3; The National Academy of Sciences of the USA; located at www.pnas.org_cgi_doi_10.1073_pnas.0807698106.
Luckevich, Mark, "MEMS microvalves: the new valve world"; Valve-World; bearing a date of May 2007; pp. 79-83.
Lynch et al.; "Design of Piezoresistive MEMS-Based Accelerometer for Integration with Wireless Sensing Unit for Structural Monitoring"; Journal of Aerospace Engineering; bearing a date of Jul. 2003; pp. 108-114; vol. 3; ASCE.
Machado et al., "Detection of Lung Cancer by Sensor Array Analyses of Exhaled Breath"; American Journal of Respiratory and Critical Care Medicine; bearing a date of 2005; pp. 1286-1291; vol. 171.
Marcu et al.; "In vivo detection of macrophages in a rabbit atherosclerotic model by time-resolved laser-induced fluorescence spectroscopy"; Atherosclerosis; bearing a date of 2005, pp. 295-303; vol. 181; Elsevier Ireland Ltd.
Martel, Sylvain; "Fundamental Principles and Issues of High-speed Piezoactuated Three-legged Motion for Miniature Robots Designed for Nanometer-scale Operations"; The International Journal of Robotics Research; bearing dates of Jul. 2005 and 2005; pp. 575-588; vol. 24, No. 7; Sage Publications.
Mataric, Maja J.; "Integration of Representation into Goal-Driven Behavior-Based Robots"; IEEE Transactions on Robotics and Automation; bearing dates of Jun. 1992 and 1992; pp. 304-312; vol. 8, No. 3; IEEE.
Mattley et al.; "Blood Characterization using uv/vis Spectroscopy"; Advances in Fluorescence Sensing Technology II (Proceedings Volume); bearing a date of 1995; pp. 462-470; vol. 2388; SPIE.

(56) **References Cited**

OTHER PUBLICATIONS

Mehmood et al.; "Autonomous Navigation of Mobile Agents Using RFID-Enabled Space Partitions"; ACMGIS '08; bearing dates of Nov. 5-7, 2008 and 2008; pp. 1-10; ACM.
Menciassi et al.; "Towards Active Capsular Endoscopy: Preliminary Results on a Legged Platform"; Proceedings of the 28th IEEE EMBS Annual International Conference; bearing dates Aug. 30, 2006-Sep. 3, 2006 and 2006; pp. 2215-2218; IEEE.
Meyer et al.; "Map-Based Navigation in Mobile Robots: II. A Review of Map-Learning and Path-Learning Strategies"; Science Direct—Cognitive Systems Research; bearing dates of Feb. 12, 2003 and Dec. 4, 2003; pp. 1-51; vol. 4, No. 4; Elsevier Science.
Mohan et al., "Bokode: Imperceptible Visual tags for Camera Based Interaction from a Distance"; ACM Transactions on Graphics (Proceedings of SIGGRAPH 2009); bearing dates of Aug. 3-7, 2009; pp. 1-8.
Mok et al.; "Recent Progress in Nucleic Acid Aptamer-Based Biosensors and Bioassays"; Sensors; bearing a date of 2008; pp. 7050-7084; vol. 8.
Morrison et al., "Clinical Applications of Micro- and Nanoscale Biosensors"; Biomedical Nanostructures; bearing a date of 2008; Chapter 17; pp. 433-454; John Wiley & Sons, Inc.
Motomiya et al.; "Flow Patterns in the Human Carotid Artery Bifurcation"; Stroke; bearing dates of Jan.-Feb. 1984; pp. 50-56; vol. 15, No. 1.
Nehmzow et al.; "Robot Navigation in the Real World: Experiments with Manchester's FortyTwo in Unmodified, Large Environments"; Robotics and Autonomous Systems; bearing a date of 2000; pp. 223-242; vol. 33; Elsevier Science B.V.
Nguyen, Clark T.-C.; "MEMS Technology for Timing and Frequency Control"; IEEE Transactions on Ultrasonics, Ferroelectrics, and Frequency Controls; bearing dates of Feb. 2007 and 2007; pp. 251-270; vol. 54, No. 2; IEEE.
Nordstrom et al.; "Identification of Cervical Intraepithelial Neoplasia (CIN) Using UV-Excited Fluorescence and Diffuse-Reflectance Tissue Spectroscopy"; Lasers in Surgery and Medicine; bearing a date of 2001; pp. 118-127; vol. 29; Wiley-Liss, Inc.
Nowinski et al.; "Three-dimensional Atlas of the Brain Anatomy and Vasculature"; RadioGraphics; bearing dates of Jan.-Feb. 2005 and 2005; pp. 263-271; vol. 25, No. 1; RSNA.
Pan et al.; "A magnetically driven PDMS micropump with ball check-valves"; Journal of Micromechanics and Microengineering; bearing a date of 2005, pp. 1021-1026; vol. 15; IOP Publishing Ltd.
Pavlidis, N.; "The diagnostic and therapeutic management of leptomeningeal carcinomatosis"; Annals of Oncology; bearing a date of 2004; pp. iv285-iv291; vol. 15 (Supp. 4); European Society for Medical Oncology.
Peng et al.; "Ultraviolet light-emitting diodes operating in the 340 nm wavelength range and application to time-resolved fluorescence spectroscopy"; Applied Physics Letters; bearing dates of Aug. 23, 2004 and 2004; pp. 1436-1438; vol. 85, No. 8; American Institute of Physics.
Pfister et al.; "Weighted Line Fitting Algorithms for Mobile Robot Map Building and Efficient Data Representation"; Proceedings of the 2003 IEEE International Conference on Robotics and Automation; bearing a date of Sep. 14-19, 2003; pp. 1-8.
"Philips develops "intelligent pill""; Reuters; bearing a date of Nov. 11, 2008; p. 1; Thomson Reuters.
"Philips' intelligent pill targets drug development and treatment for digestive tract diseases"; PhysOrg.com; bearing a date of Nov. 11, 2008; pp. 1-3; located at http://www.physorg.com/news145640874.html.
Phillips et al.; "Detection of Lung Cancer With Volatile Markers in the Breath"; Chest; bearing dates of Jun. 2003 and 2003; pp. 2115-2123; vol. 123, No. 6; American College of Chest Physicians.
Pisupati et al.; "A Central Axis Algorithm for 3D Bronchial Tree Structures"; Proceedings of the International Symposium on Computer Vision; bearing a date of 1995; pp. 259-264; IEEE.
Psathakis et al.; "8-Isoprostane, a Marker of Oxidative Stress, is Increased in the Expired Breath Condensate of Patients With Pulmonary Sarcoidosis"; Chest; bearing dates of Mar. 2004 and 2004, pp. 1005-1011; vol. 125, No. 3; American College of Chest Physicians.
Quaglia et al.; "An endoscopic capsule robot: a meso-scale engineering case study"; Journal of Micromechanics and Microengineering; bearing a date of 2009; pp. 1-11; vol. 19; IOP Publishing Ltd.
Quirini et al.; "Design of a Pill-Sized 12-legged Endoscopic Capsule Robot"; 2007 IEEE International Conference on Robotics and Automation; bearing dates of Apr. 10-14, 2007 and 2007; pp. 1856-1862; IEEE.
Raman et al.; "In Vivo Atherosclerotic Plaque Characterization Using Magnetic Susceptibility Distinguishes Symptom-Producing Plaques"; JACC: Cardiovascular Imaging; bearing dates of Jan. 2008 and 2008; pp. 49-57; vol. 1, No. 1; Elsevier.
Rasmussen et al.; "Proximity-based Access Control for Implantable Medical Devices"; CCS '09, Proceedings of the 16th ACM Conference on Computer and Communications Security; bearing dates of Nov. 9-13, 2009 and 2009; pp. 1-10.
"Remote-controlled capsule endoscope safely examines the stomach"; PhysOrg.com; bearing a date of Jan. 18, 2011; pp. 1-2; located at http://www.physorg.com/news-2011-01-remote-controlled-capsule-endoscope-safely-stomach.html.
"Researchers Create Tiny, Self-Propelled Devices"; PhysOrg.com; printed on Feb. 12, 2007; pp. 1-3; located at: http://www.physorg.com/printnews.php?newsid=90521279.
Roh et al.; "Strategy for Navigation Inside Pipelines With Differential-Driveinpipe Robot"; IEEE Xplore; 2002 and 2005; pp. 2575-2580 (Only the Abstract is being provided); vol. 3; IEEE; located at: http://ieeexplore.ieee.org/xpls/abs_all.jsp?arnumber=1013619 ; printed on Apr. 23, 2007.
Roh et al.; "Actively Steerable In-Pipe Inspection Robots for Underground Urban Gas Pipelines"; IEEE Xplore; bearing dates of 2001 and 2005; pp. 761-766 (Only the Abstract is being provided); vol. 1; IEEE; located at: http://ieeexplore.ieee.org/xpls/abs_all.jsp?arnumber=932642; printed on Apr. 23, 2007.
Rolfe, Brigitte; "Toward Nanometer-Scale Sensing Systems: Natural and Artificial Noses as Models for Ultra-Small, Ultra-Dense Sensing Systems"; Advances in Computers; bearing dates of Nov. 2004, 2004, and 2007; pp. 11-46; vol. 71; Elsevier, B.V.
Schertler et al.; "Effects of ECG Gating and Postprocessing Techniques on 3D MDCT of the Bronchial Tree"; AJR; bearing a date of Jul. 2004; pp. 83-89; vol. 183; American Roentgen Ray Society.
Schnakenberg et al.; "Intravascular pressure monitoring system"; Sensors and Actuators A: Physical; bearing a date of 2004; pp. 61-67; vol. 110; Elsevier B.V.
Schwartz, John; "In the Lab: Robots That Slink and Squirm"; The New York Times: Science; bearing a date of Mar. 27, 2007; pp. 1-4; The New York Times Company; located at: http://www.nytimes.com/2007/03/27/science/27robo.html?ex=1332648000 &en=d4541141c174b454&ei=5124&partner=digg&exprod=digg; printed on Mar. 27, 2007.
"Spider pill to seek out diseases"; PhysOrg.com; bearing a date of Oct. 16, 2009 and 2009; p. 1; located at http://www.physorg.com/news174893082.html.
Sun et al.; "A Miniature RF Communication System for Micro Gastrointestinal Robots"; Journal of Medical Engineering & Technology; bearing a date of 2003; pp. 160-163; vol. 27.
Suzumori et al.; "Micro Inspection Robot for 1-in Pipes"; IEEE/ASME Transactions on Mechatronics; bearing dates of Sep. 1999 and 1999; pp. 286-292; vol. 4, No. 3; IEEE.
Tang et al.; "Cerebral Vascular Tree Matching of 3D-RA Data Based on Tree Edit Distance"; Medical Imaging and Augmented Reality; bearing a date of 2006; pp. 116-123.
The Biomedical Engineering Handbook, Second Edition; bearing a date of 2000; pp. IV-1-43-31; vol. I; CRC Press LLC.
The Biomedical Engineering Handbook, Second Edition; bearing a date of 2000; pp. V-1-51-9; vol. I; CRC Press LLC.
Thrun, Sebastian; "Learning Metric-Topological Maps for Indoor Mobile Robot Navigation"; Artificial Intelligence; bearing a date of 1998; pp. 21-71; vol. 99; Elsevier Science B.V.

(56) **References Cited**

OTHER PUBLICATIONS

Thrun, Sebastian; "Probabilistic Algorithms in Robotics"; AI Magazine; bearing dates of Winter 2000 and 2000; pp. 93-109; vol. 21, No. 4; American Association for Artificial Intelligence.
Thrun, Sebastian; "Robotic Mapping: A Survey"; Exploring Artificial Intelligence in the New Millenium; bearing a date of Feb. 2002; pp. 1-29 (31 total pages); Morgan Kaufmann.
Thrun et al.; "A Real-Time Algorithm for Mobile Robot Mapping With Applications to Multi-Robot and 3D Mapping"; IEEE International Conference on Robotics and Automation; bearing a date of Apr. 2000; pp. 1-8.
Thrun et al.; "Integrating Topological and Metric Maps for Mobile Robot Navigation: A Statistical Approach"; pp. 1-7.
Tomatis et al.; "Simultaneous Localization and Map Building: A Global Topological Model with Local Metric Maps"; Robotics Autonomous Systems; bearing a date of 2003; pp. 1-6; vol. 44.
Tsuruta et al.; "Control Circuit in an In-Pipe Wireless Micro Inspection Robot"; IEEE Xplore; bearing dates of 2000 and 2005; pp. 59-64 (Only the Abstract is being provided); IEEE; located at: http://ieeexplore.ieee.org/xpls/abs_all.jsp?arnumber=903290; printed on Apr. 23, 2007.
Ulrich et al.; "Appearance-Based Place Recognition for Topological Localization"; IEEE International Conference on Robotics and Automation; bearing a date of Apr. 2000; pp. 1023-1029.
Verheye et al.; "Selective Clearance of Macrophages in Atherosclerotic Plaques by Autophagy"; Journal of the American College of Cardiology; bearing dates of Feb. 13, 2007 and 2007; pp. 706-715; vol. 49, No. 6; Elsevier Inc.
Wacharasindhu et al.; "Radioisotope microbattery based on liquid semiconductor"; Applied Physics Letters; bearing dates of Dec. 11, 2008, Jun. 9, 2009, Jul. 6, 2009, Dec. 8, 2009 and 2009; pp. 014103-1-014103-3; vol. 95; American Institute of Physics.
Wakimoto et al.; "A Micro Snake-Like Robot for Small Pipe Inspection"; International Symposium on Micromechatronics and Human Science; bearing a date of 2003; pp. 303-308; IEEE.
Wang et al.; "A MEMS-based Air Flow Sensor with a Free-standing Micro-cantilever Structure"; Sensors; bearing dates of Aug. 27, 2007, Oct. 10, 2007, Oct. 17, 2007, and 2007; pp. 2389-2401; vol. 7; MDPI.
Watson et al.; "Piezoelectric ultrasonic resonant motor with stator diameter less than 250 μm: the Proteus motor"; Journal of Micromechanics and Microengineering; bearing dates of Sep. 25, 2008, Nov. 18, 2008, Jan. 20, 2009, and 2009; pp. 1-5; vol. 19; IOP Publishing Ltd.
Weingandt et al.; "Autofluorescence spectroscopy for the diagnosis of cervical intraepithelial neoplasia"; BJOG: an International Journal of Obstetrics and Gynaecology; bearing dates of Aug. 2002 and 2002; pp. 947-951; vol. 109; RCOG.
Xi et al.; "Self-assembled microdevices driven by muscle"; Nature Materials; bearing dates of Feb. 2005 and 2005; pp. 180-184 (10 pages total); vol. 4; Nature Publishing Group.
Yang et al.; "Power generation with laterally packaged piezoelectric fine wires"; Nature Nanotechnology; bearing dates of Nov. 9, 2008, Jan. 2009, and 2009; pp. 34-39; vol. 4; Macmillan Publishers Limited.
Yang et al.; "Converting Biomechanical Energy into Electricity by a Muscle-Movement-Driven Nanogenerator"; Nano Letters; bearing dates of Dec. 25, 2008, Jan. 31, 2009, and 2009; pp. 1201-1205; vol. 9, No. 3; American Chemical Society.
Yu et al.; "System for the analysis and visualization of large 3D anatomical trees"; Computers in Biology and Medicine; bearing dates of Oct. 6, 2006, May 31, 2007, Jun. 4, 2007, and 2007; pp. 1802-1820; vol. 37; Elsevier Ltd.
Zhao et al.; "Physicist Develops Natural Motor Technique"; PhysOrg.com; bearing dates of Apr. 21, 2007 and 2007; 1 page; United Press International; located at: http://www.physorg.com/news96357975.html; printed on Apr. 23, 2007.
Zheng et al.; "Design and Fabrication of a Micro Coulter Counter with Thin Film Electronics"; Proceedings of 2006 International Conference on Microtechnologies in Medicine and Biology; bearing dates of May 9-12, 2006 and 2006; pp. 16-19; IEEE.
Zhu et al.; "Flattening Maps for the Visualization of Multibranched Vessels"; IEEE Transactions on Medical Imaging; bearing dates of Feb. 10, 2004, Sep. 27, 2004, Feb. 2005, and 2005; pp. 191-198; vol. 24, No. 2; IEEE.
Zrimec et al.; "3D Modelling and Visualization of the Human Lung"; Proceedings of the 2nd International Symposium on 3D Data Processing, Visualization, and Transmission (3DPVT'04); bearing a date of 2004; pp. 110-115; IEEE.
Zyga, Lisa; "Microswimmer Propels Itself With Near-Zero Friction"; PhysOrg.com; bearing dates of Jun. 4, 2007 and 2007; pp. 1-2; PhyOrg.com; located at: http://www.physorg.com/news100176842.html; printed on Jun. 6, 2007.
U.S. Appl. No. 13/136,680, Ferren et al.
U.S. Appl. No. 13/136,679, Ferren et al.
U.S. Appl. No. 13/136,677, Ferren et al.
U.S. Appl. No. 13/136,676, Ferren et al.
U.S. Appl. No. 13/136,675, Ferren et al.
U.S. Appl. No. 13/136,678, Ferren et al.
U.S. Appl. No. 13/136,674, Ferren et al.
U.S. Appl. No. 13/135,696, filed Jul. 12, 2011, Ferren et al.
U.S. Appl. No. 13/135,694, filed Jul. 12, 2011, Ferren et al.
Mosby's Dictionary of Medicine, Nursing & Health Professions; "endoscopy"; 2009; Credo Reference. Web. Jun. 29, 2011; 1 page; Elsevier Health Sciences.
UK Intellectual Property Office Examination Report Under Section 18(3); App. No. GB0821526.1; bearing a date of Jul. 15, 2010; received by our agent Jul. 16, 2010; pp. 1-2.
Korean Intellectual Property Office (KIPO); Notice of Office Action; App. No. 10-2007-7009231; Jun. 8, 2012; pp. 1-5 (translation provided, 2 pages).
Hammer-Wilson et al.; "Fluorescence Diagnostics of *Helicobacter pylori*-Infected Human Gastric Mucosa: Establishing Technique and Validity"; Scandinavian Journal of Gastroenterology; bearing a date of 2007, accepted Jan. 2, 2007; pp. 941-950; vol. 42; Taylor& Francis.
So, Peter TC; "Two-Photon Fluorescence Light Microscopy"; Encyclopedia of Life Sciences; bearing a date of 2002; pp. 1-5; Macmillan Publishers Ltd, Nature Publishing Group; located at: http://web.mit.edu/solab/Documents/Assets/So-2PF%20light%20microscopy.pdf.
Thomas et al.; "Detection and Analysis of Tumor Fluorescence Using a Two-Photon Optical Fiber Probe"; Biophysical Journal; bearing a date of Jun. 2004; 7 pages (3959-3965); vol. 86, No. 6.
European Patent Office, Supplementary European Search Report, Pursuant to Rule 62 EPC; App. No. EP 08795525; Jan. 21, 2015 (received by our Agent on Jan. 16, 2015); pp. 1-7.
Ganz et al.; "Helicobacter pylori in Patients Can Be Killed by Visible Light"; Lasers in Surgery and Medicine; vol. 36; Mar. 24, 2005; pp. 260-265; Wiley-Liss, Inc.
Li et al.; "Capsule Design for Blue Light Therapy against Helicobacter pylori"; PLOS ONE; Jan. 27, 2016; pp. 1-10; located at: DOI:10.1371/journal.pone.0147531.
Richard et al., "Angiogenesis and G-protein-coupled receptors: signals that bridge the gap," Oncogene, 2001, pp. 1556-1562, vol. 20, Nature Publishing Group.

* cited by examiner

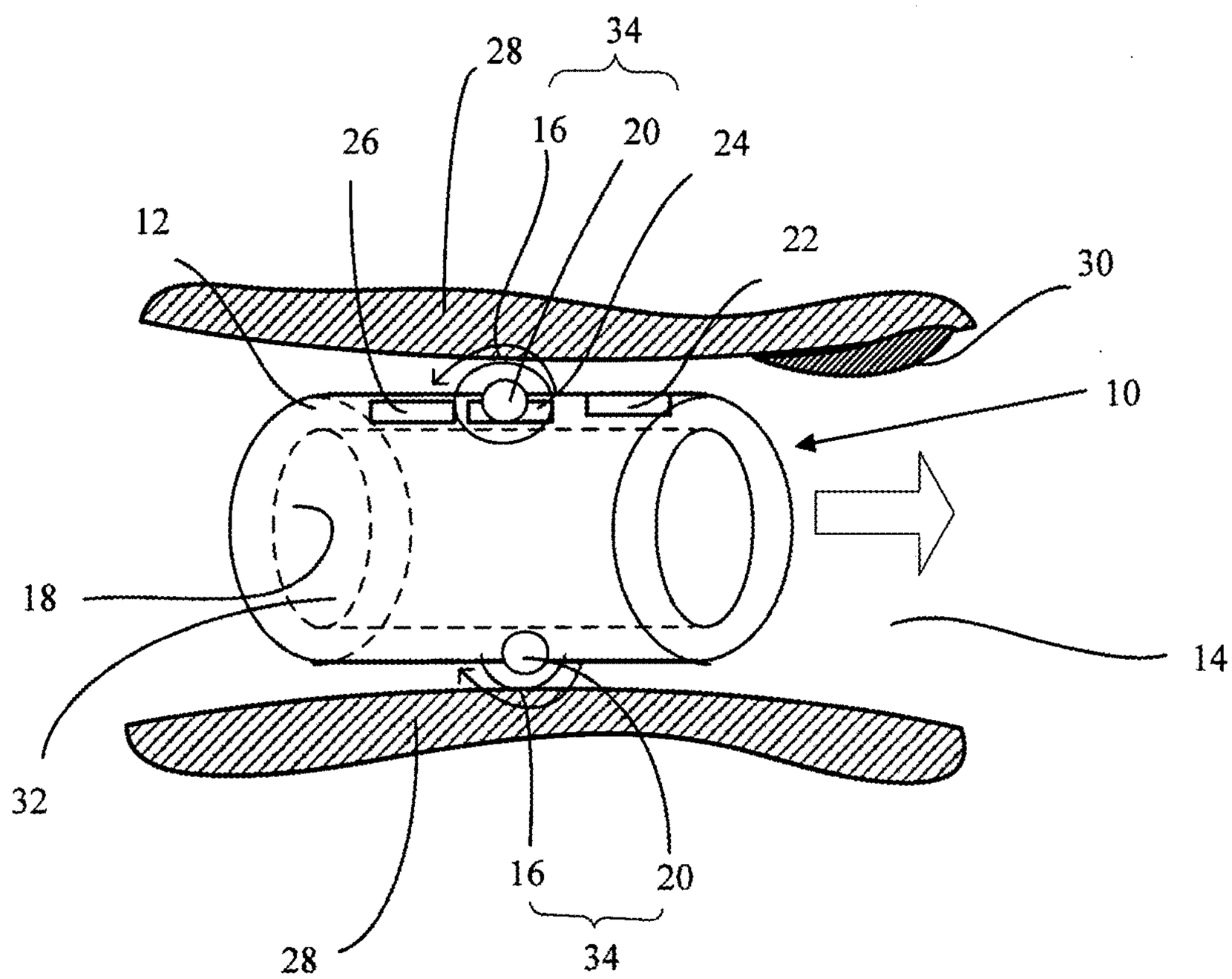

FIG. 1

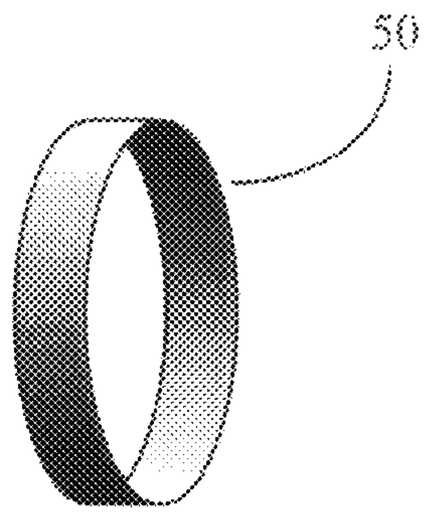

FIG. 2A

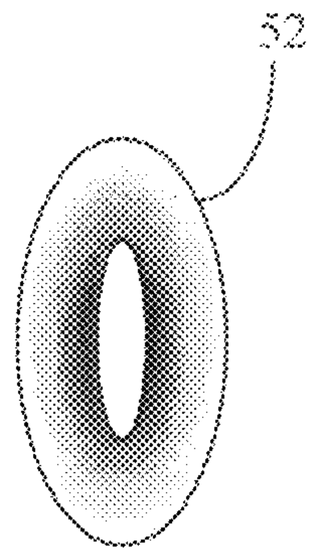

FIG. 2B

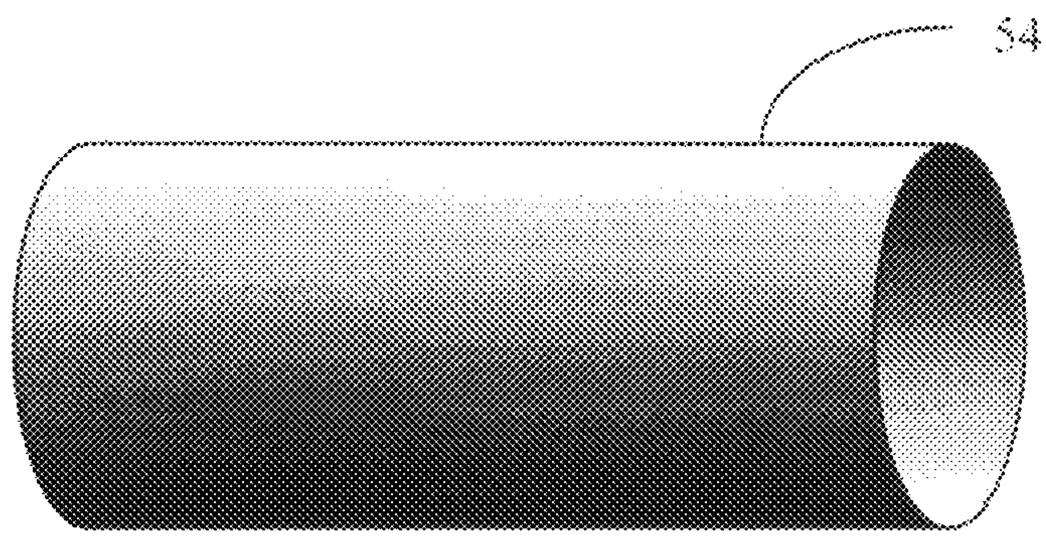

FIG. 2C

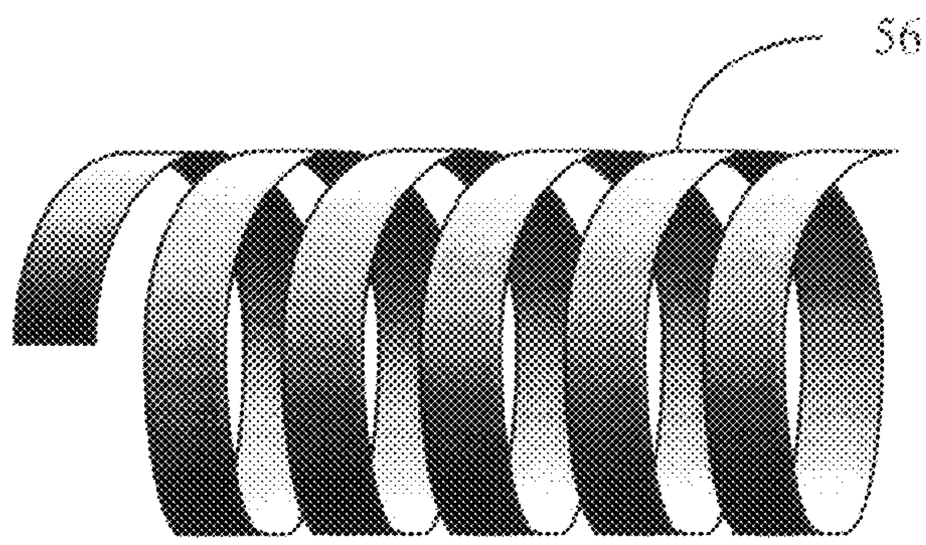

FIG. 2D

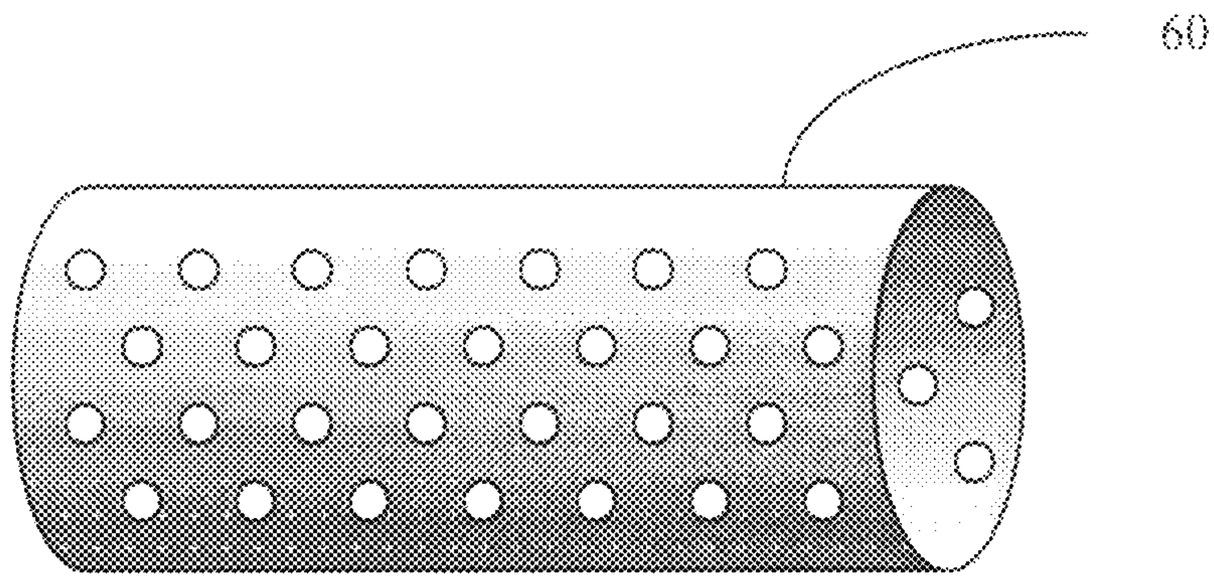

FIG. 3A

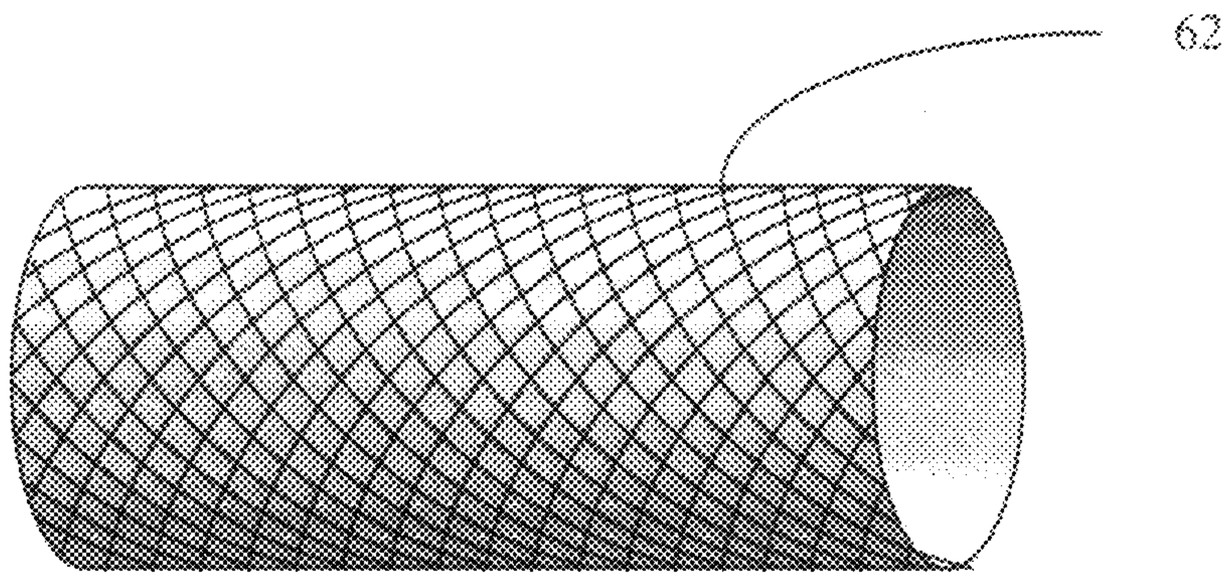

FIG. 3B

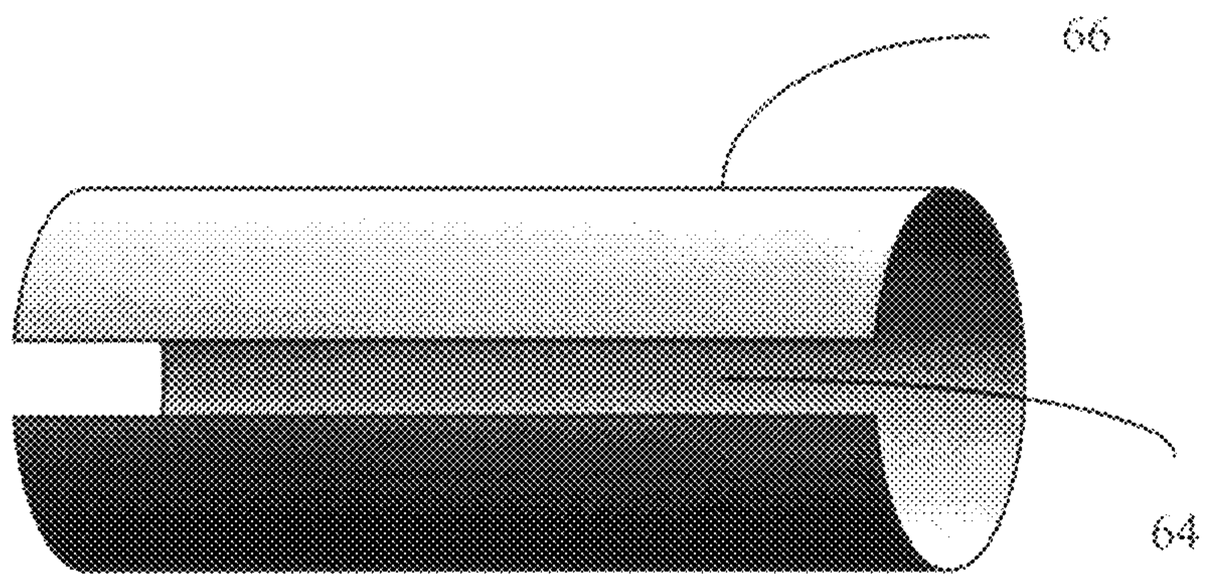

FIG. 3C

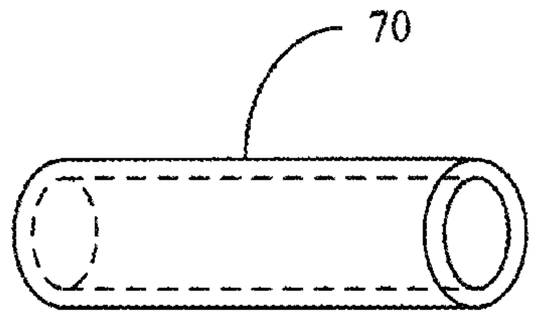

FIG. 4A

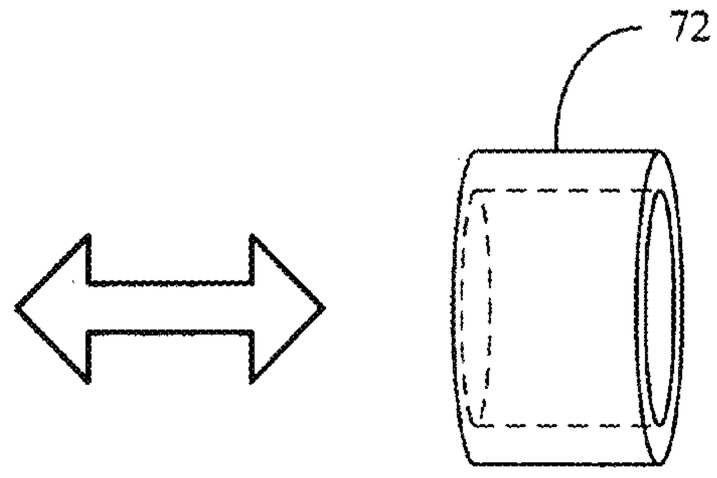

FIG. 4B

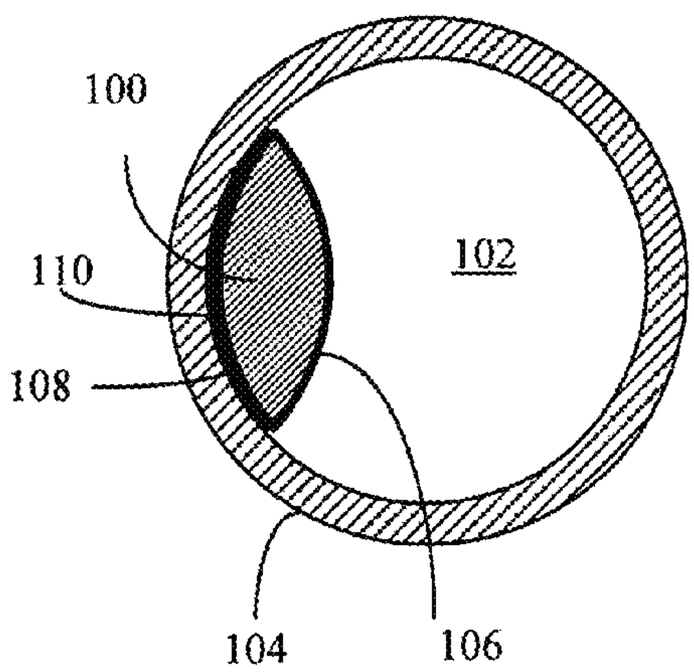

FIG. 5A

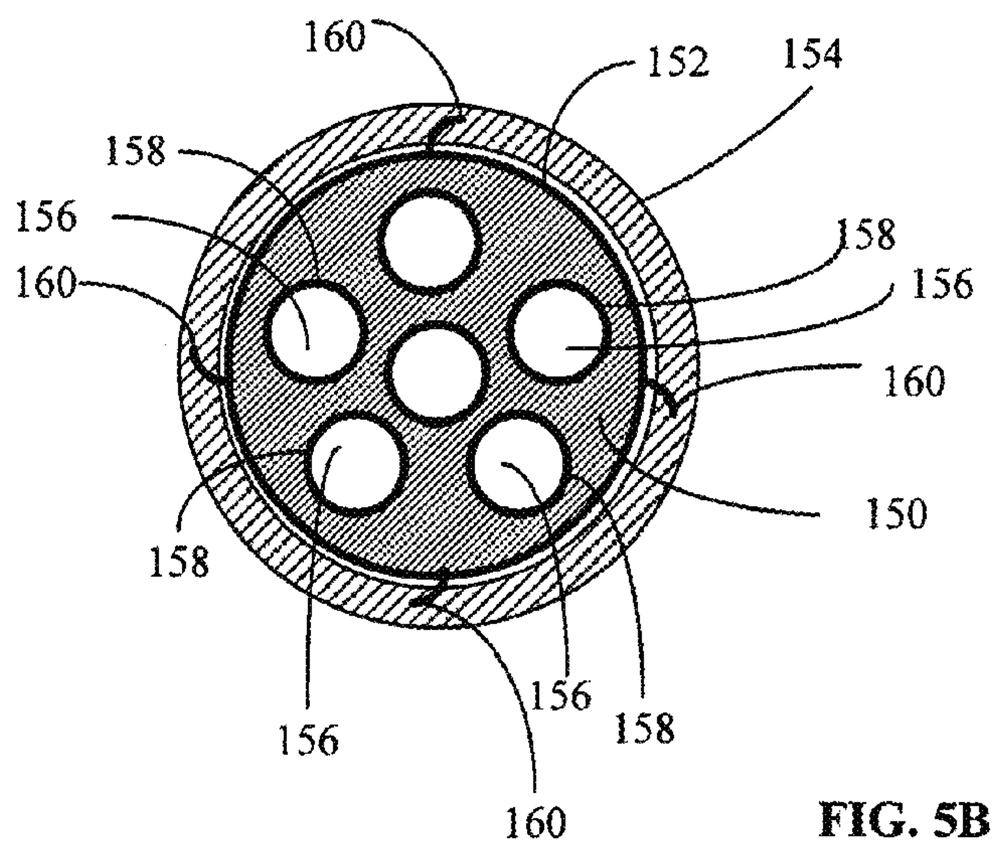

FIG. 5B

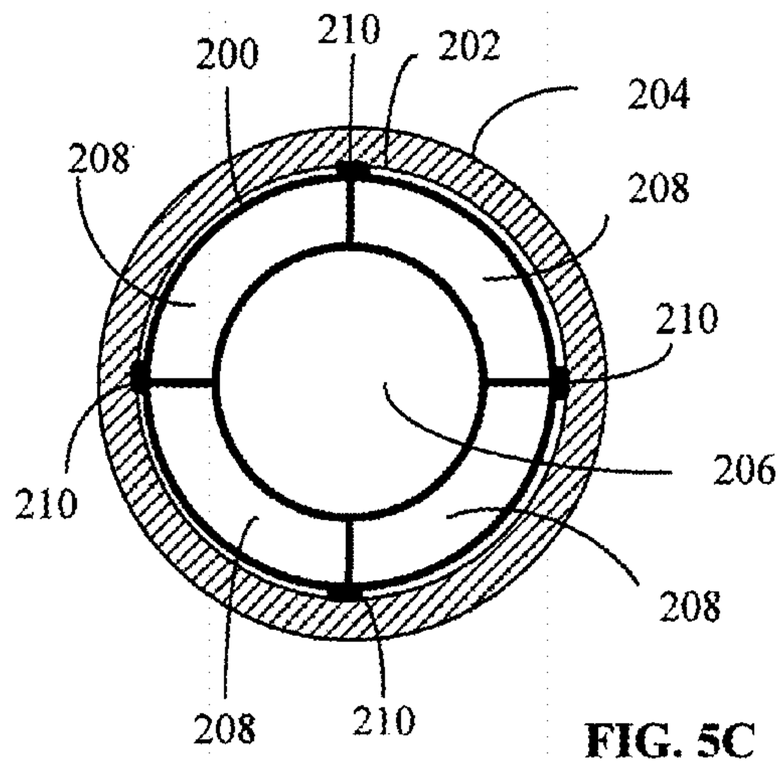

FIG. 5C

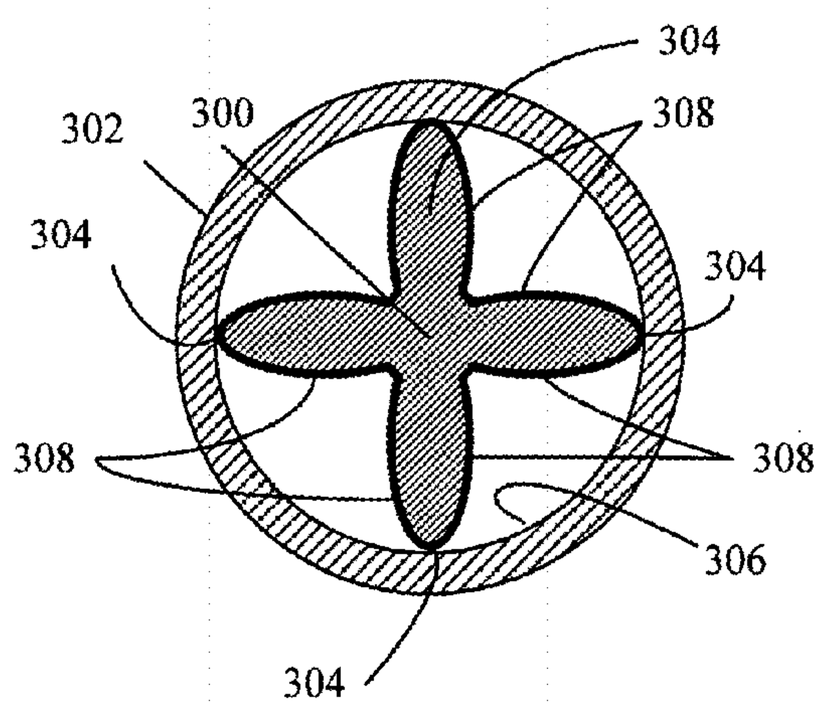

FIG. 5E

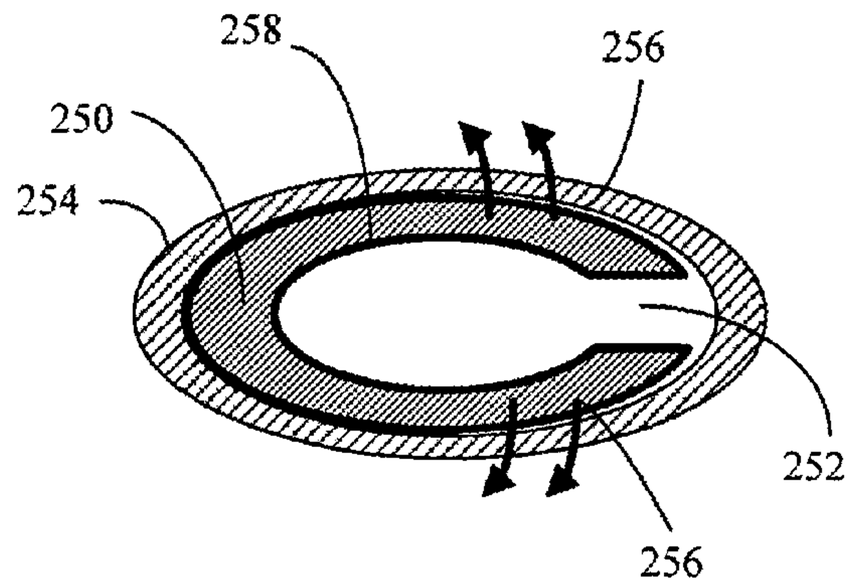

FIG. 5D

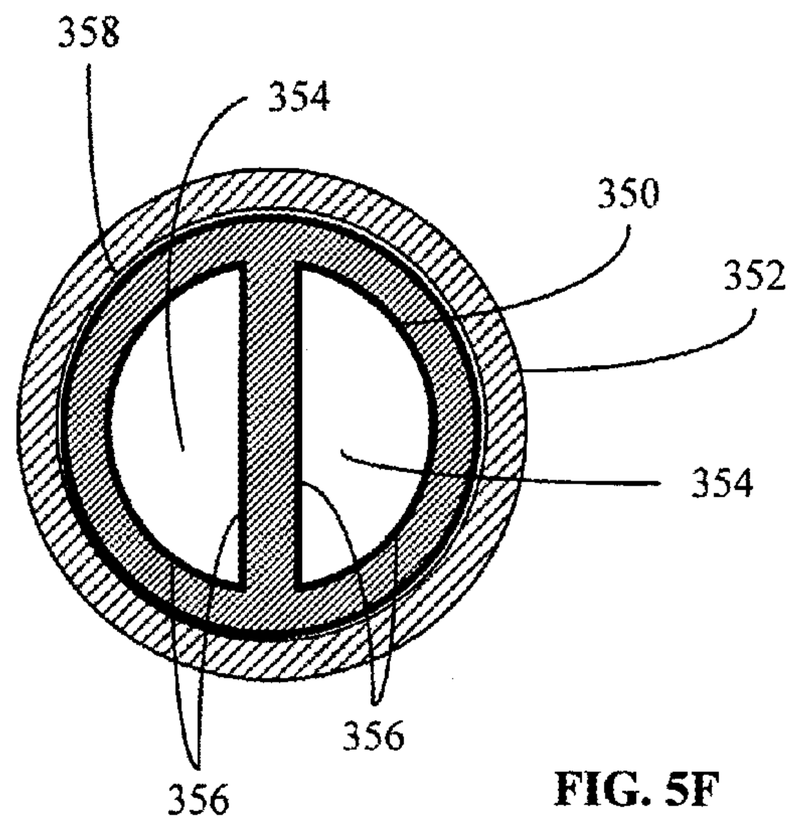

FIG. 5F

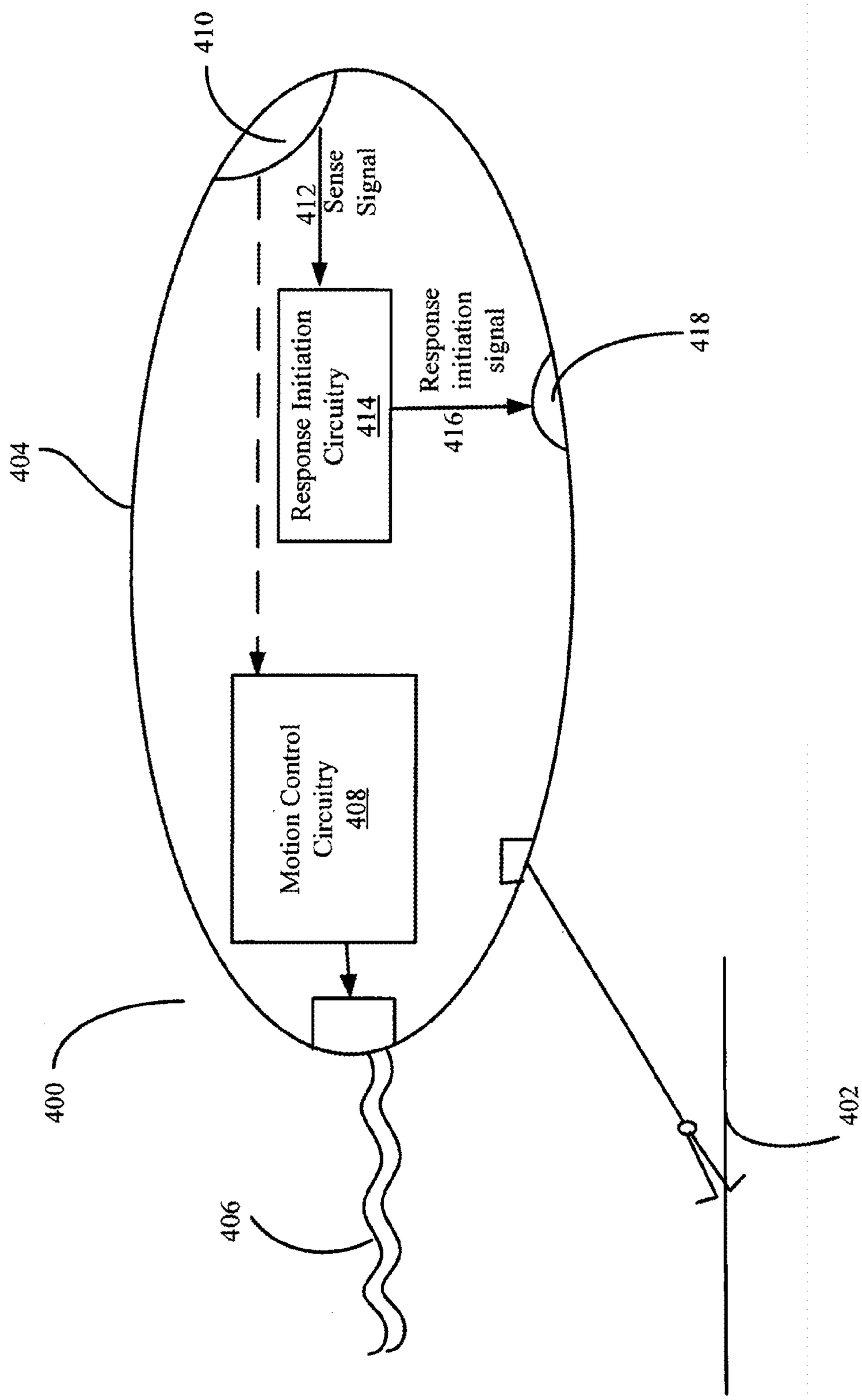
410
412
Sense
Signal
Response Initiation
Circuitry
414
Response
initiation
signal
416
418
404
Motion Control
Circuitry
408
400
406
402

FIG. 6

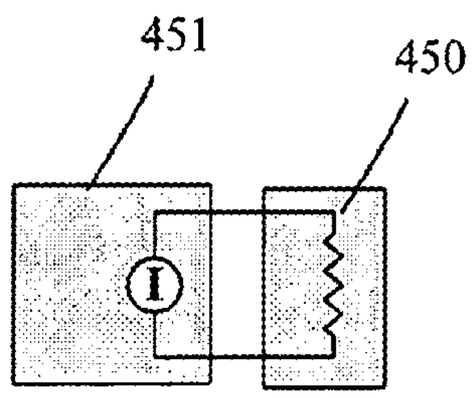

FIG. 7A

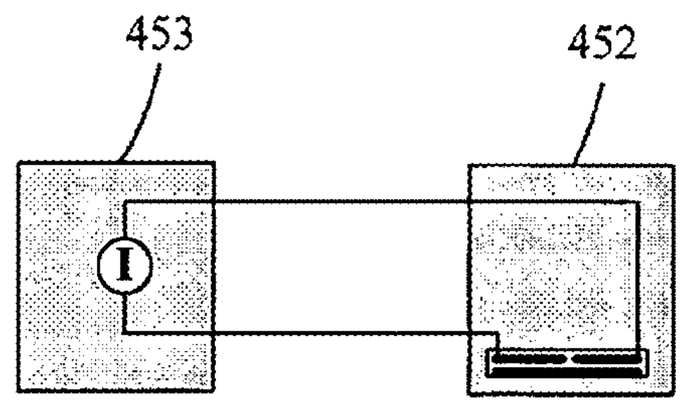

FIG. 7B

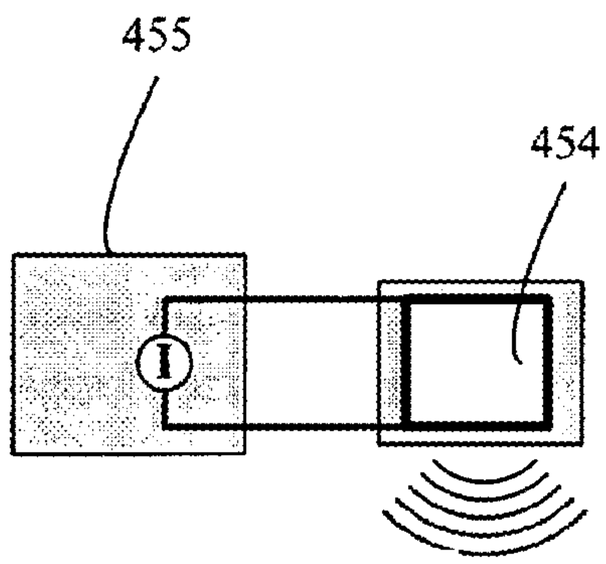

FIG. 7C

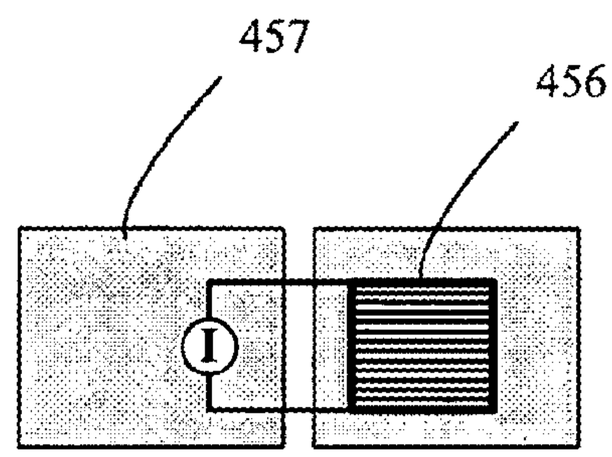

FIG. 7D

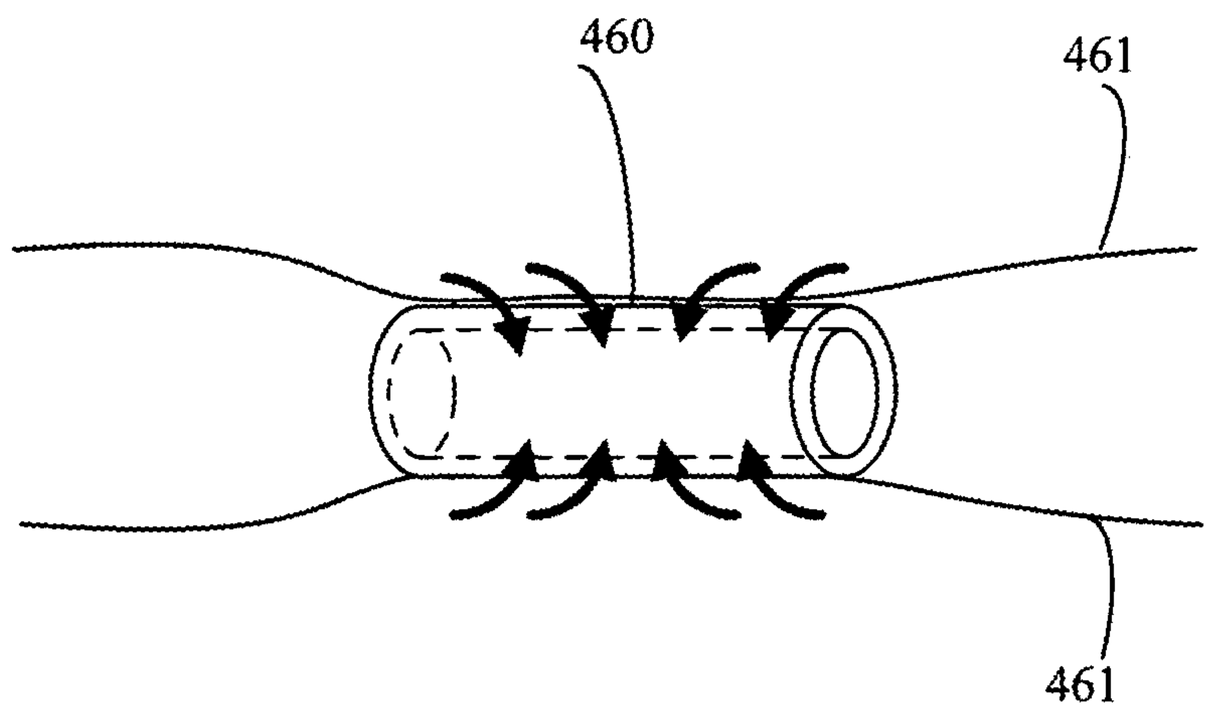

FIG. 8A

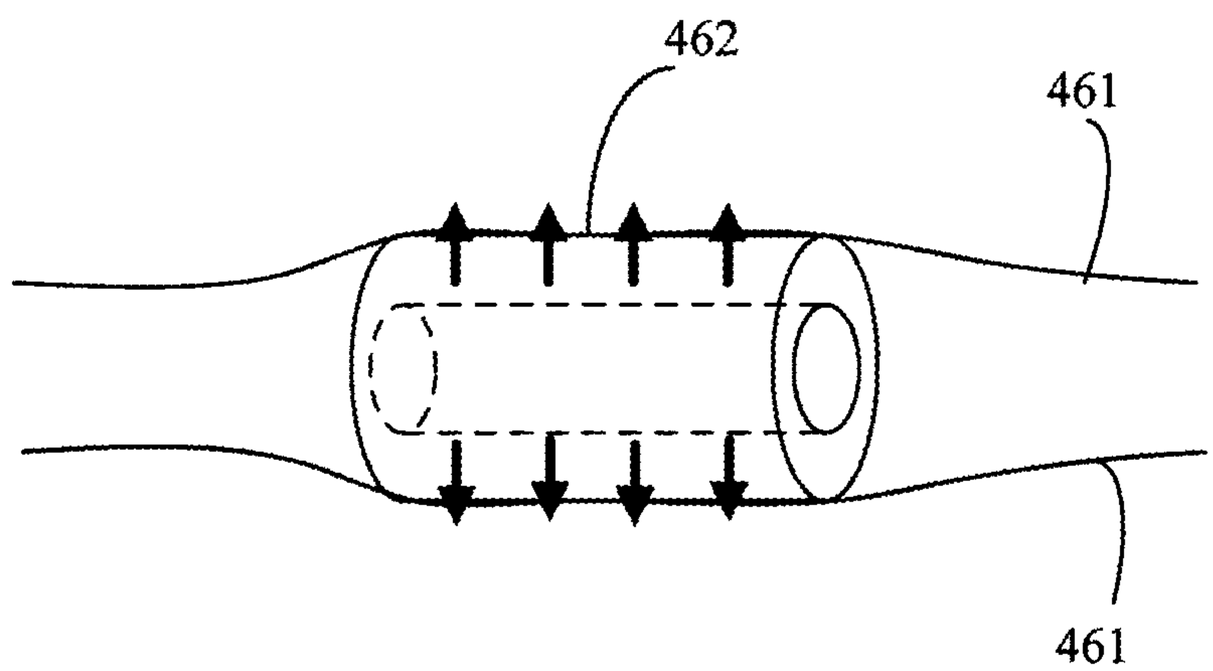

FIG. 8B

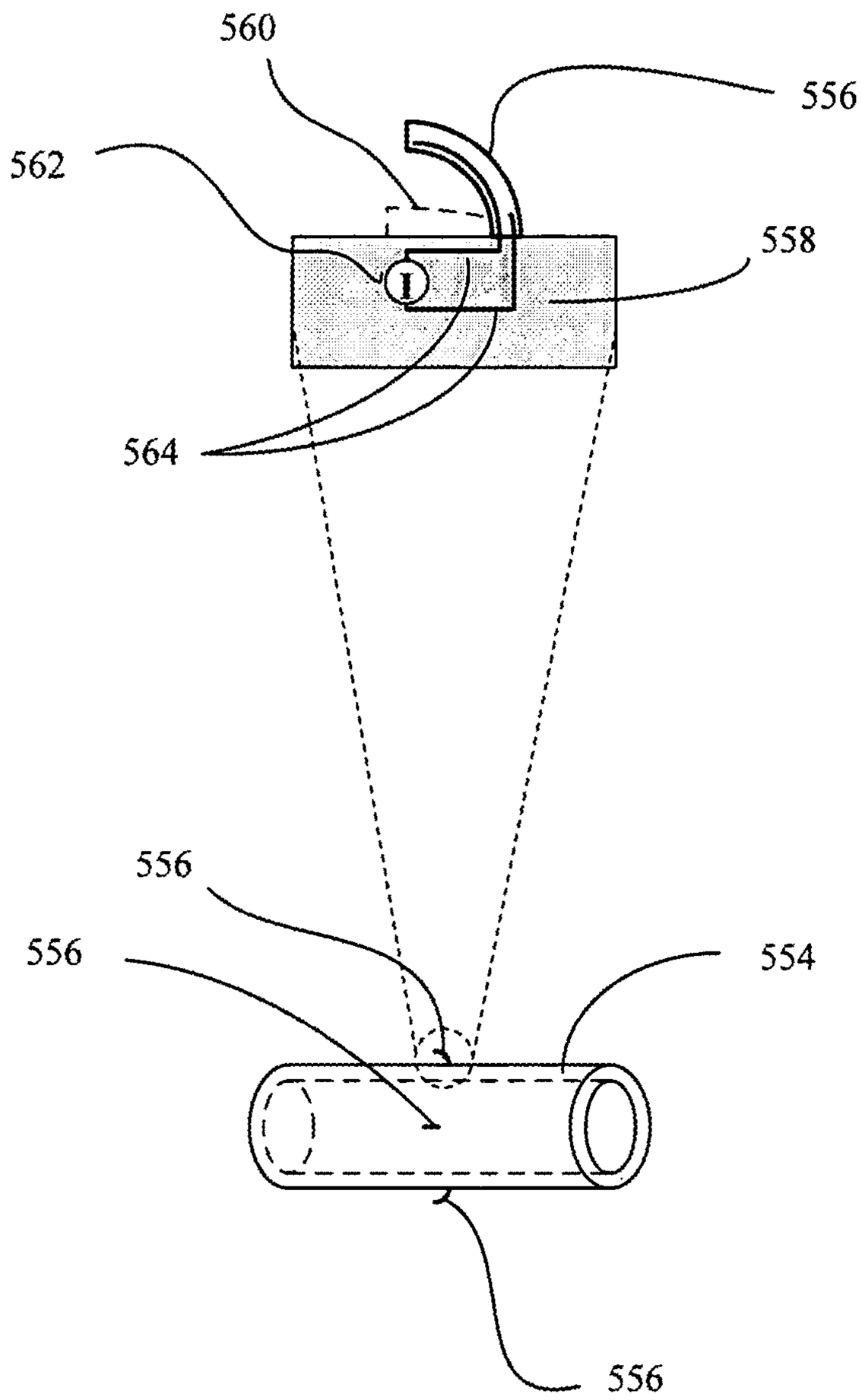

FIG. 9B

FIG. 9A

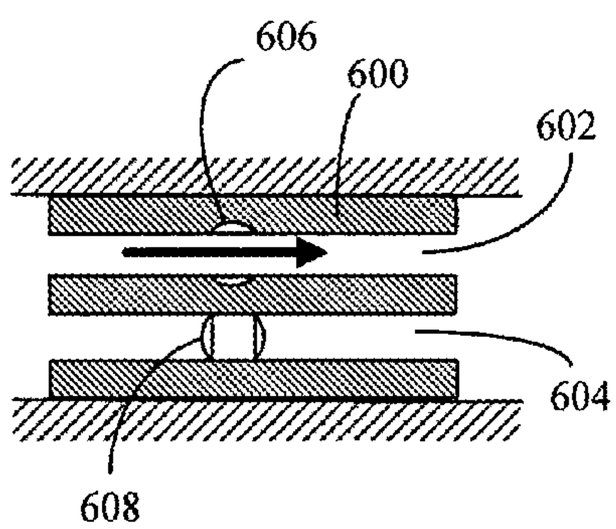

FIG. 10A

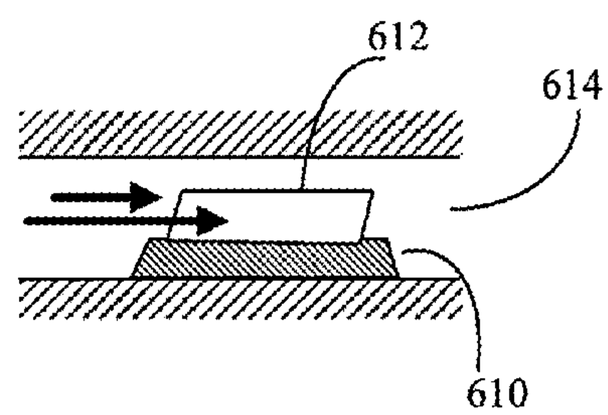

FIG. 10B

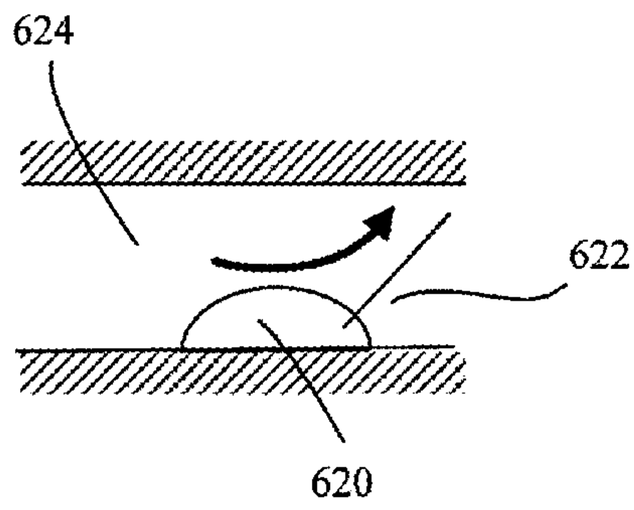

FIG. 10C

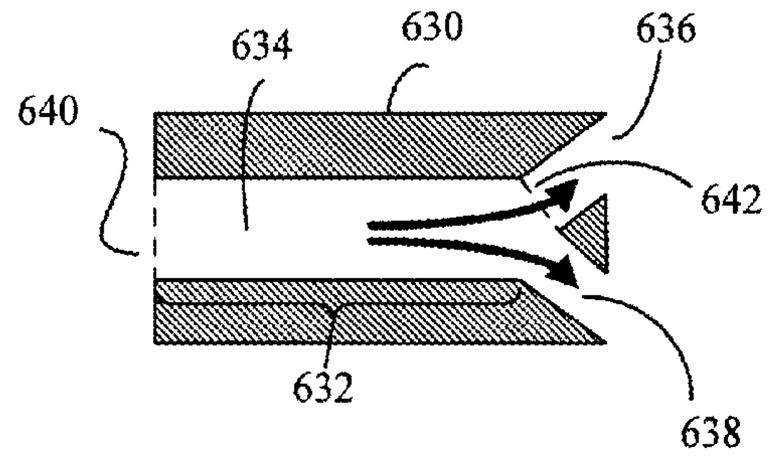

FIG. 10D

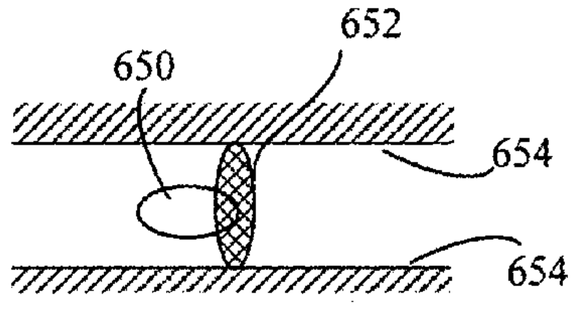

FIG. 10E

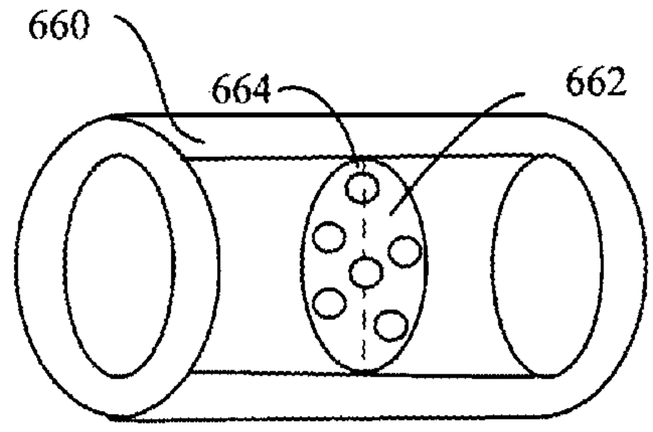

FIG. 10F

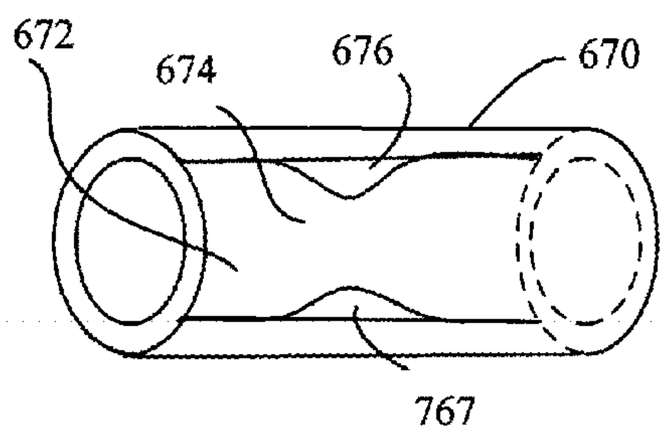

FIG. 10G

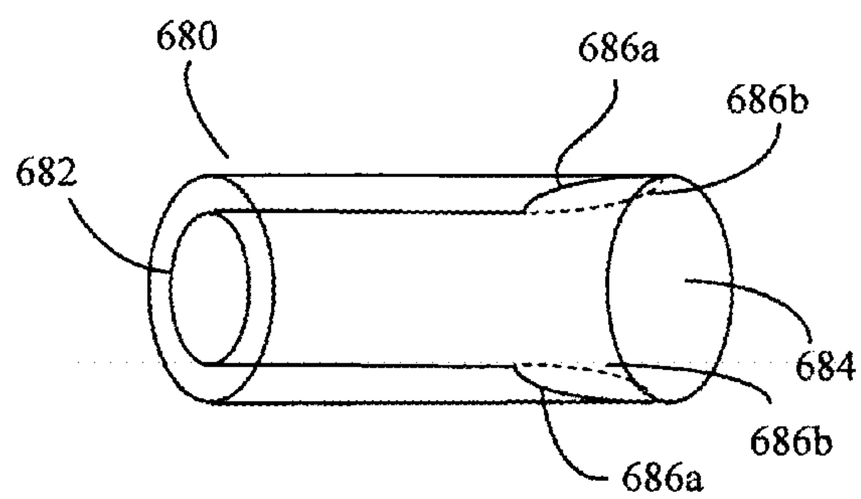

FIG. 10H

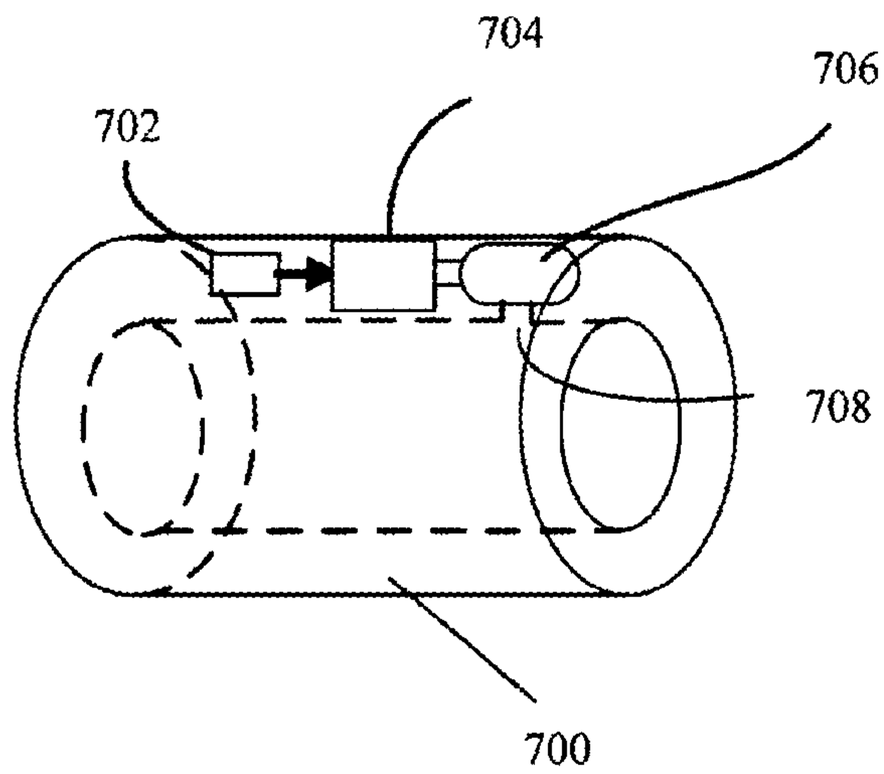

FIG. 11

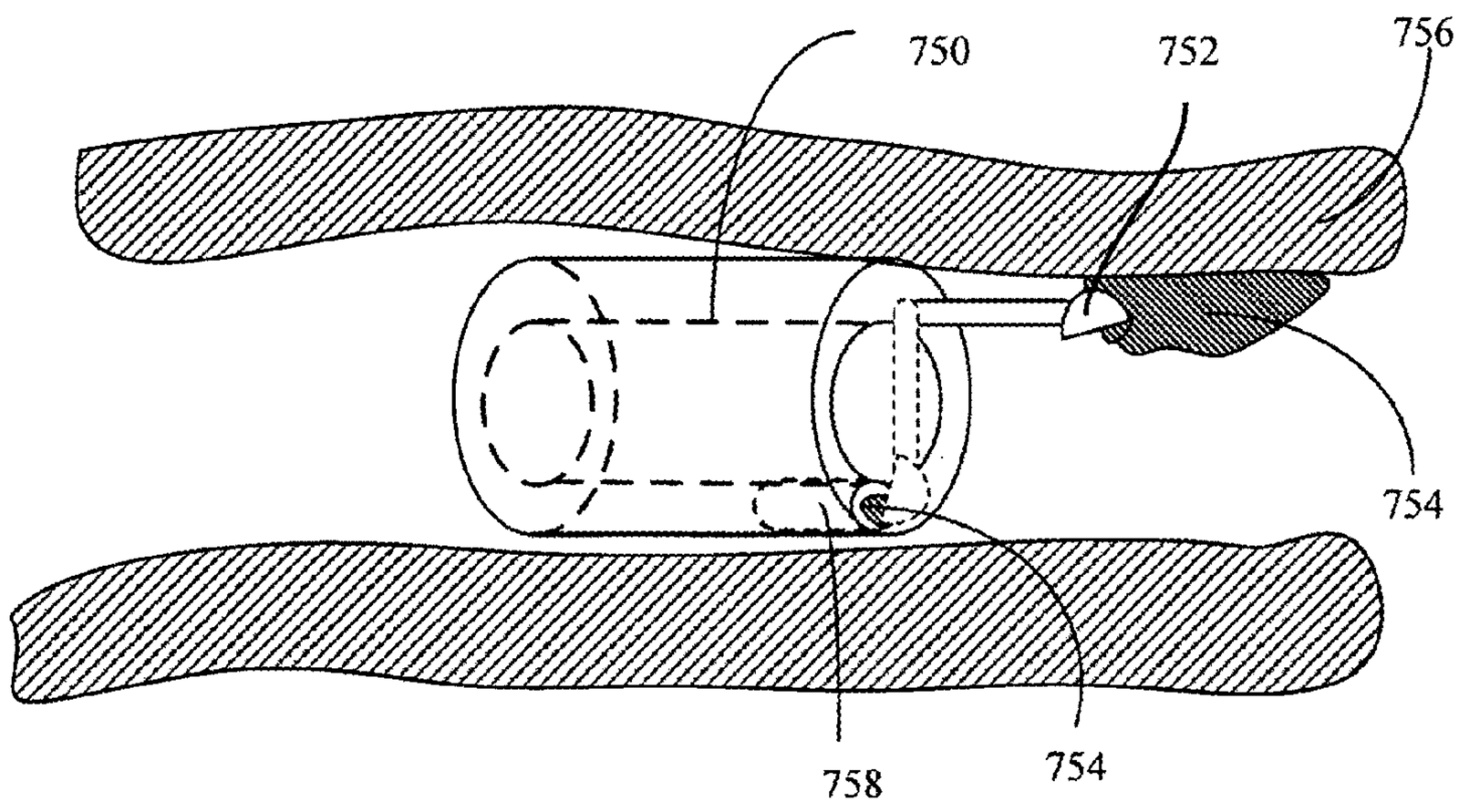

FIG. 12

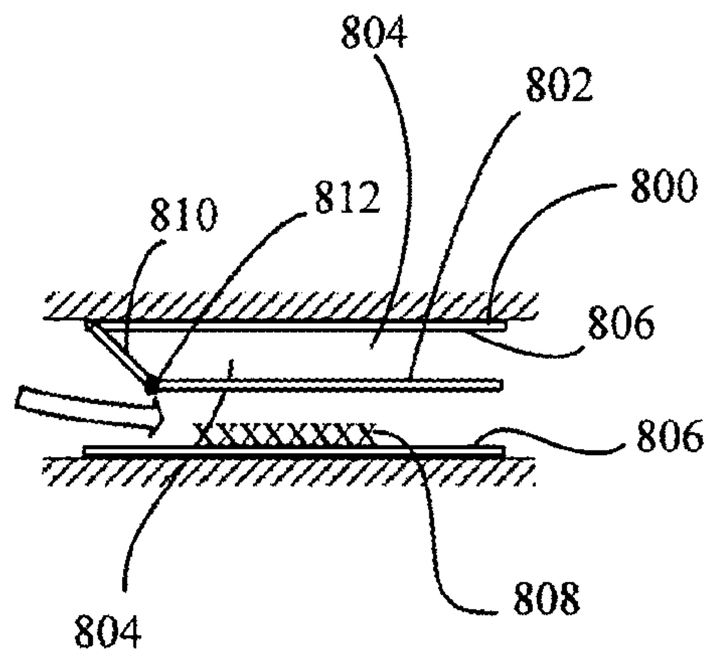

FIG. 13

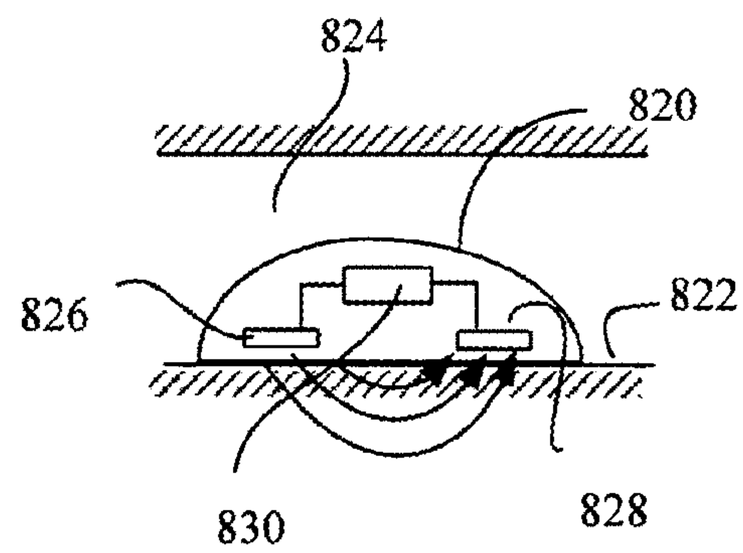

FIG. 14

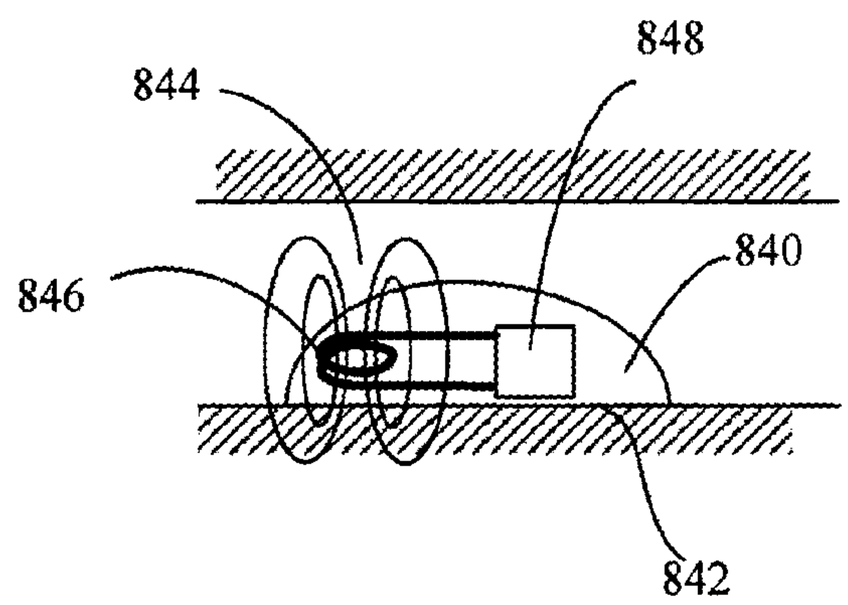

FIG. 15

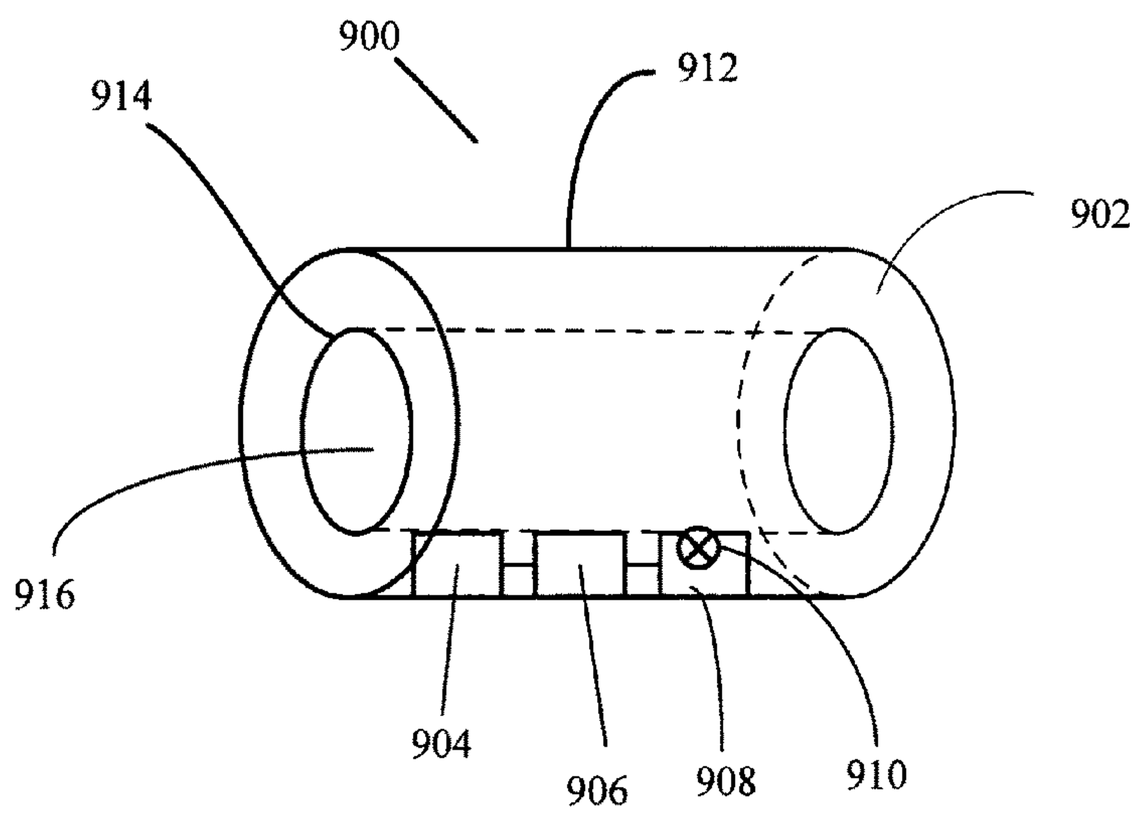

FIG. 16

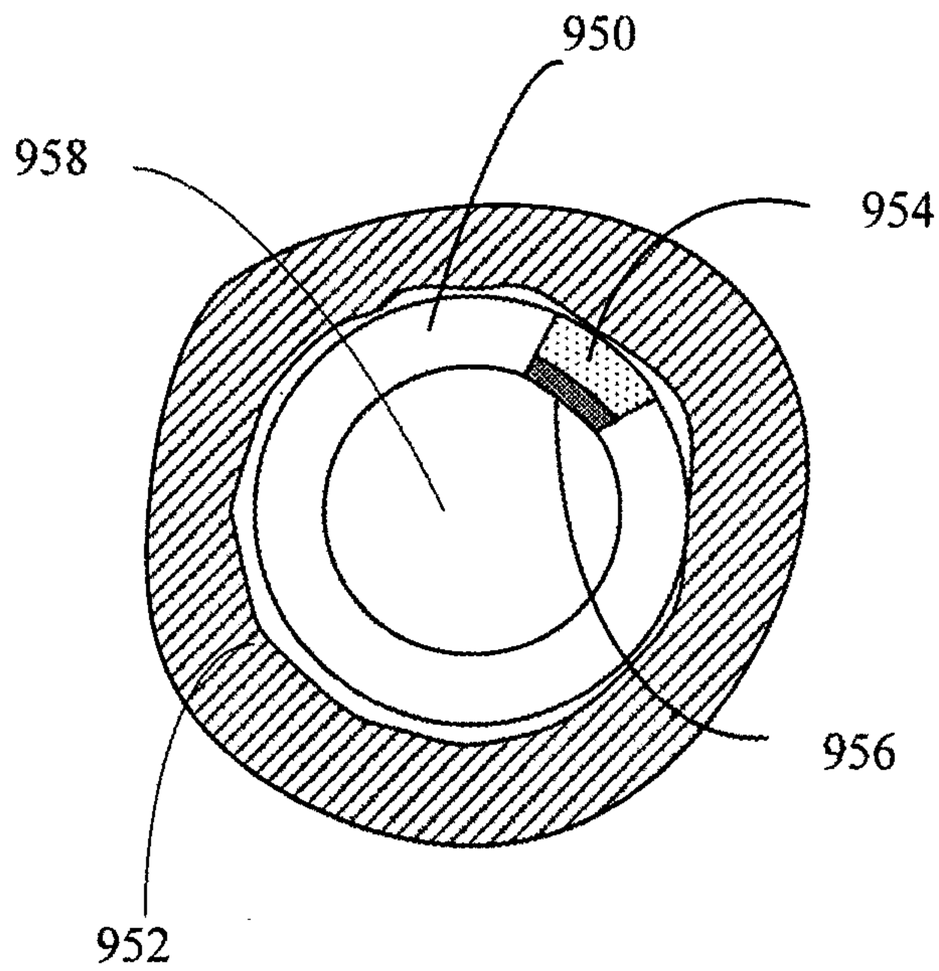

FIG. 17

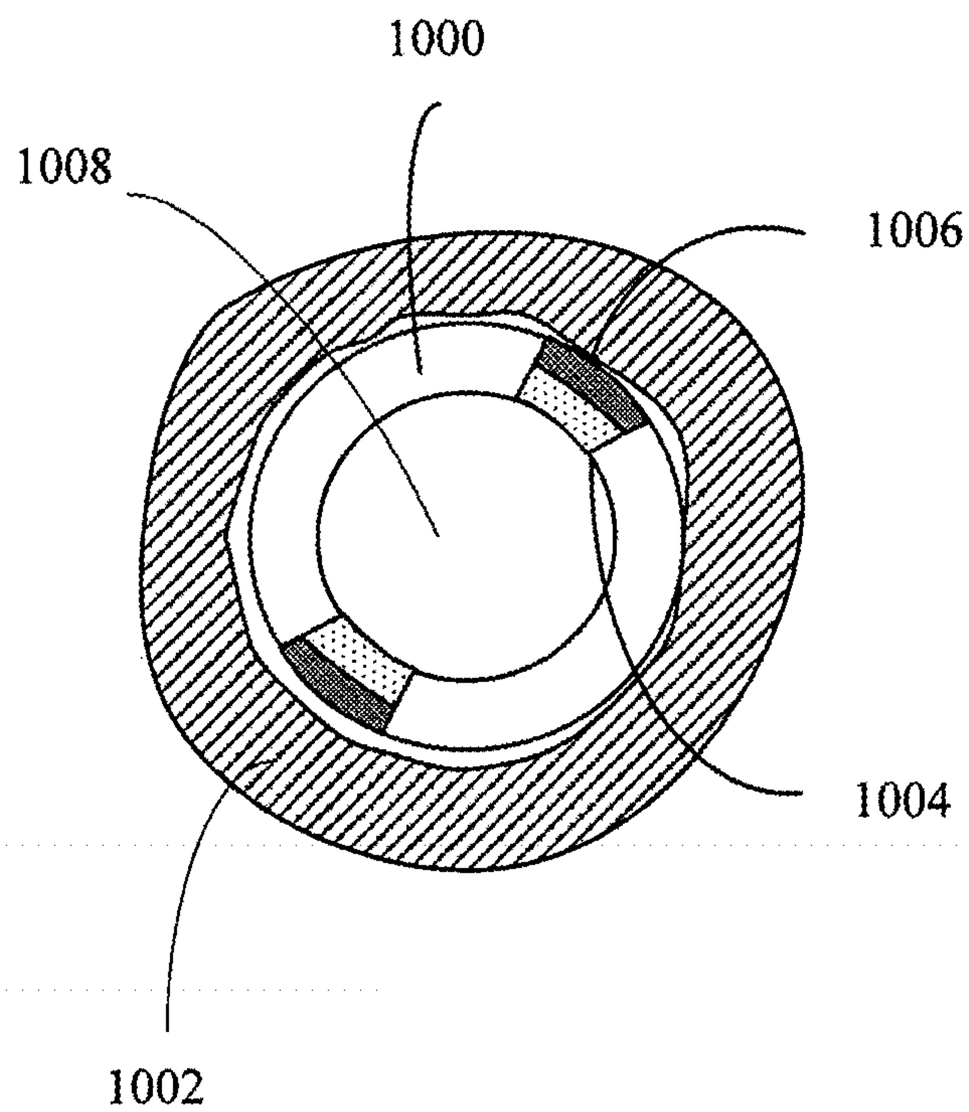

FIG. 18

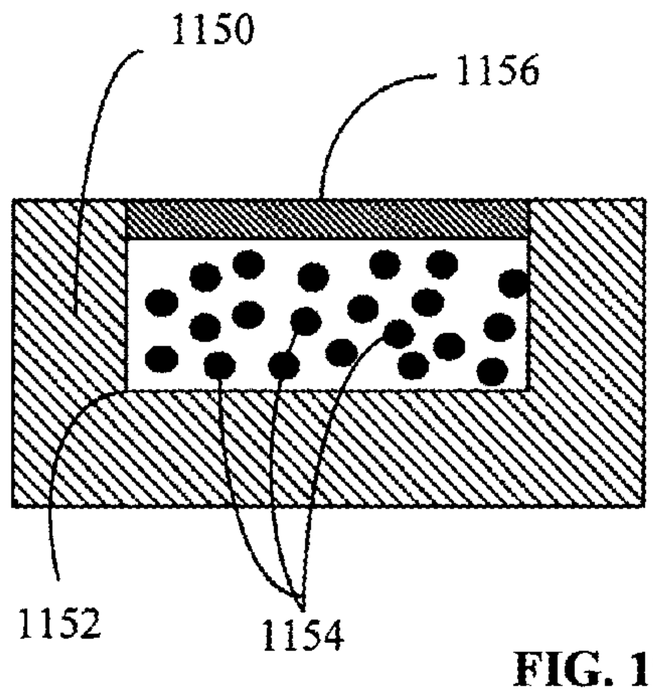

FIG. 19A

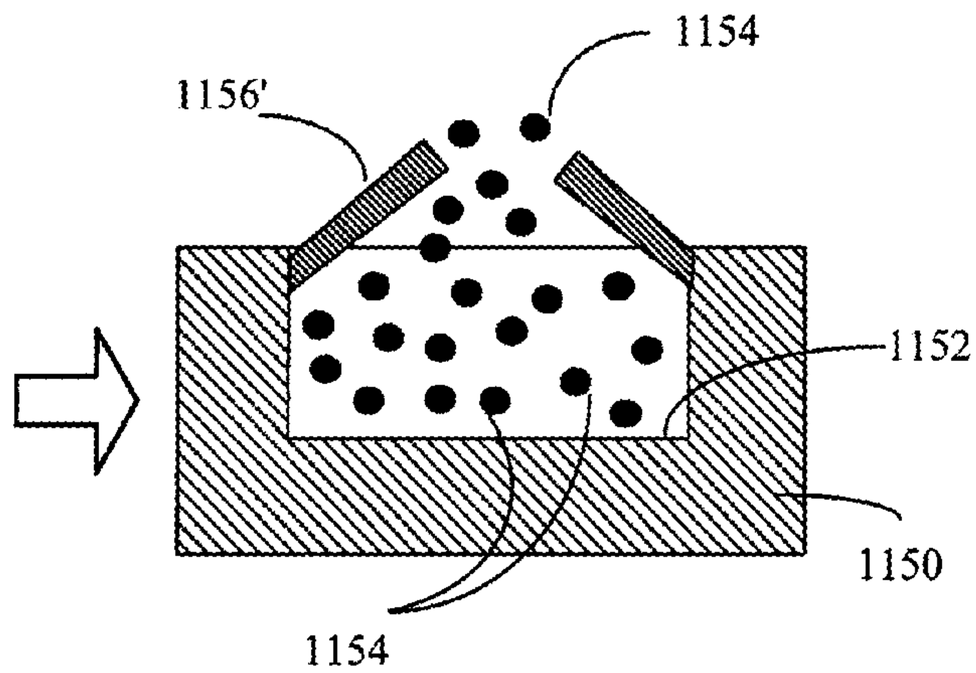

FIG. 19B

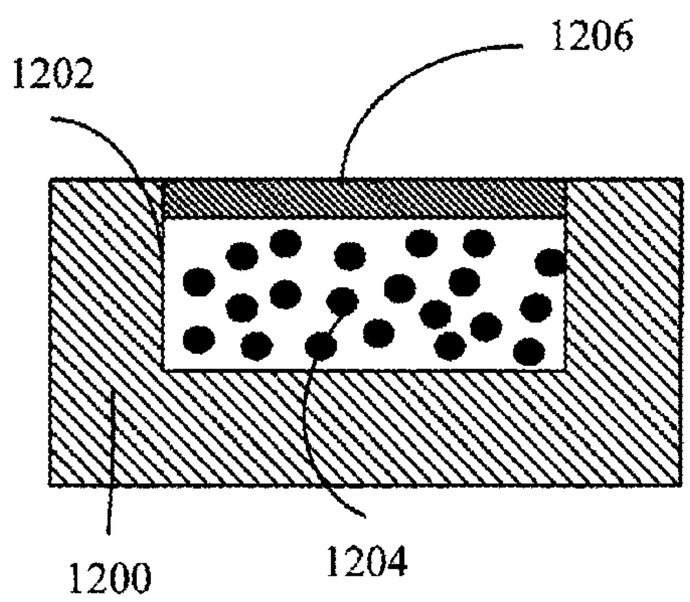

FIG. 20A

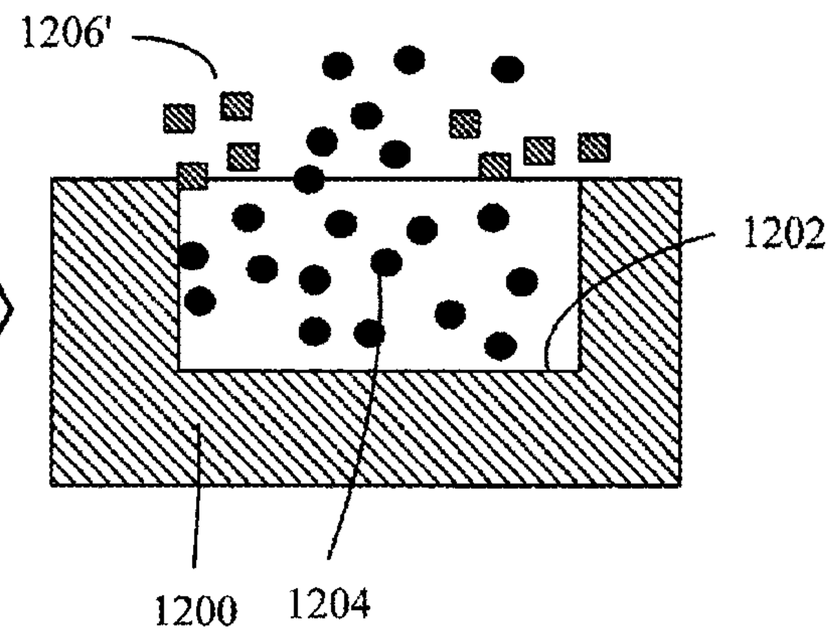

FIG. 20B

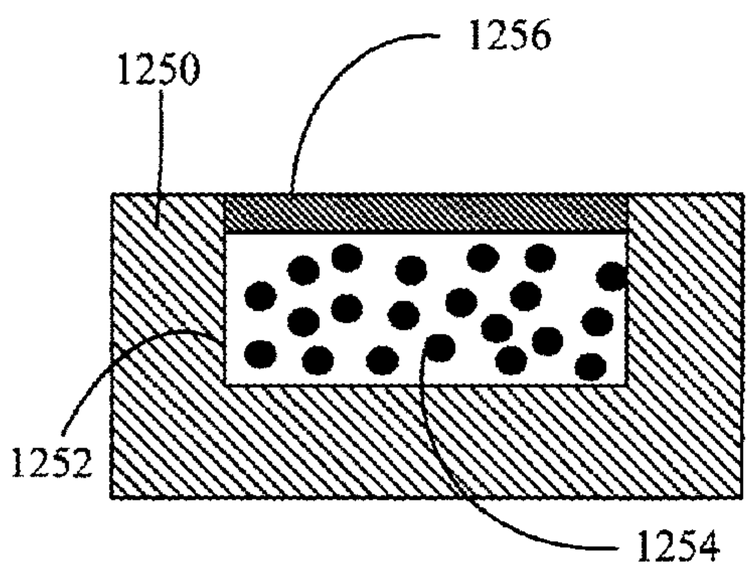

FIG. 21A

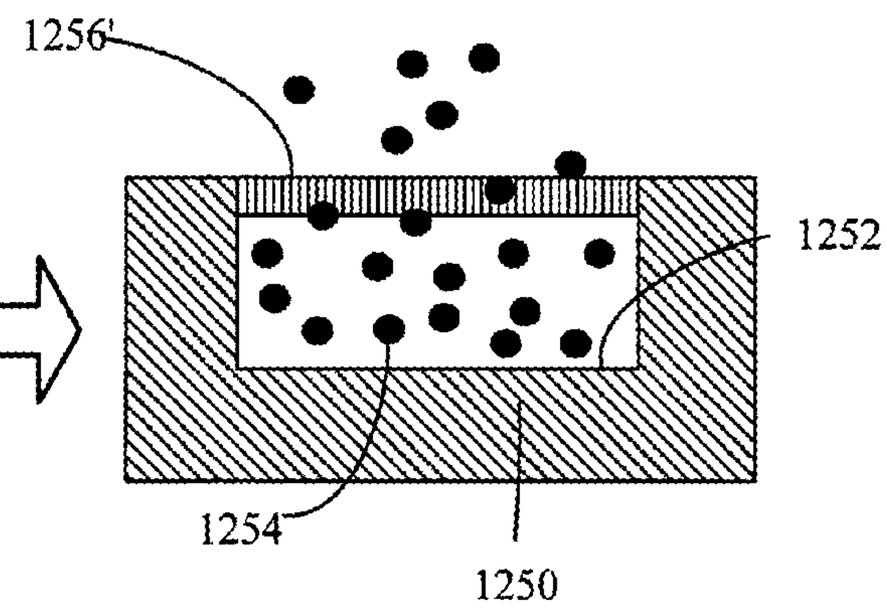

FIG. 21B

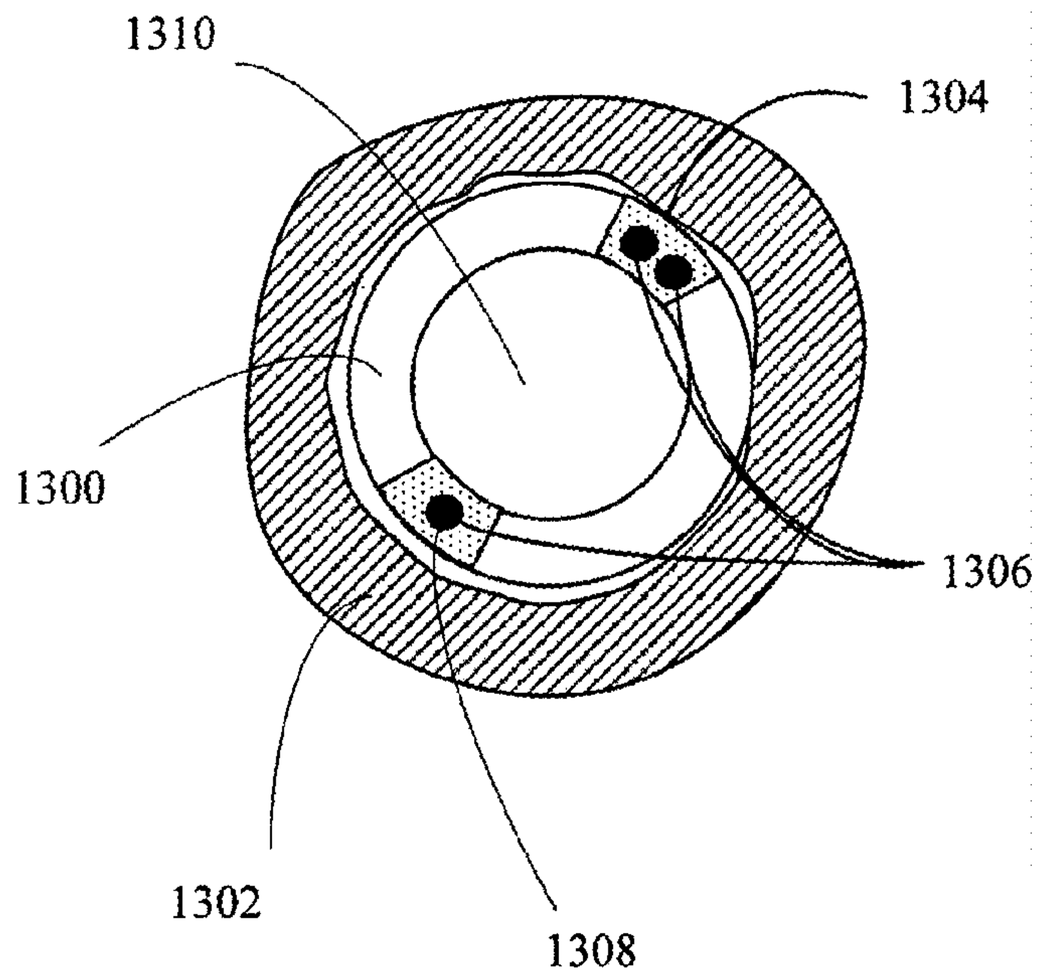

FIG. 22

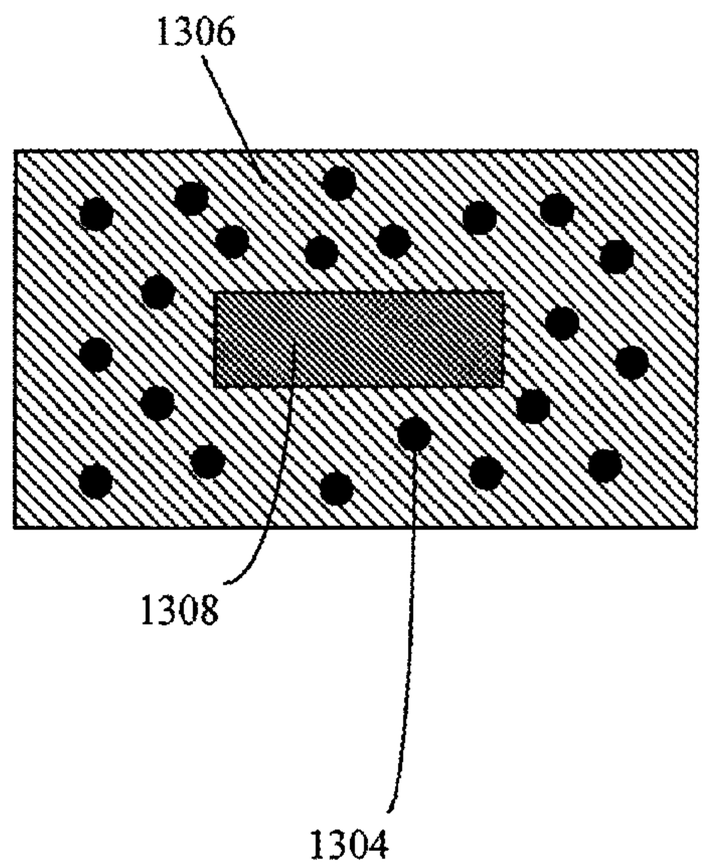

FIG. 23A

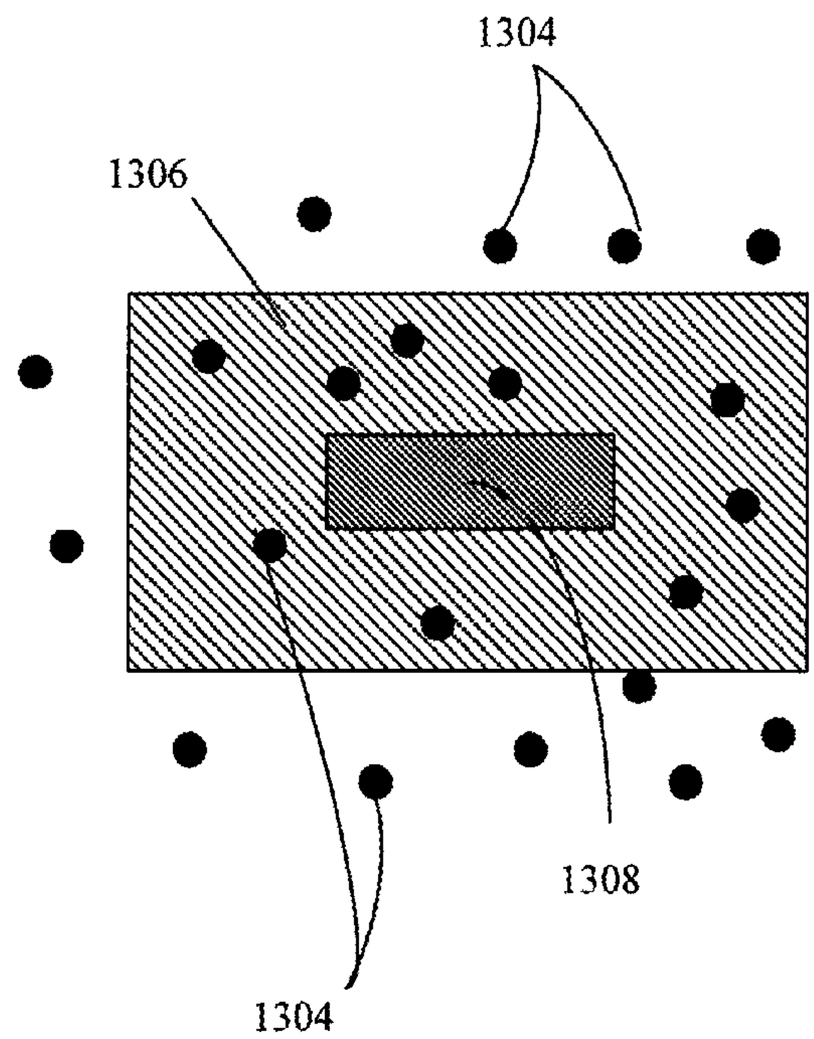

FIG. 23B

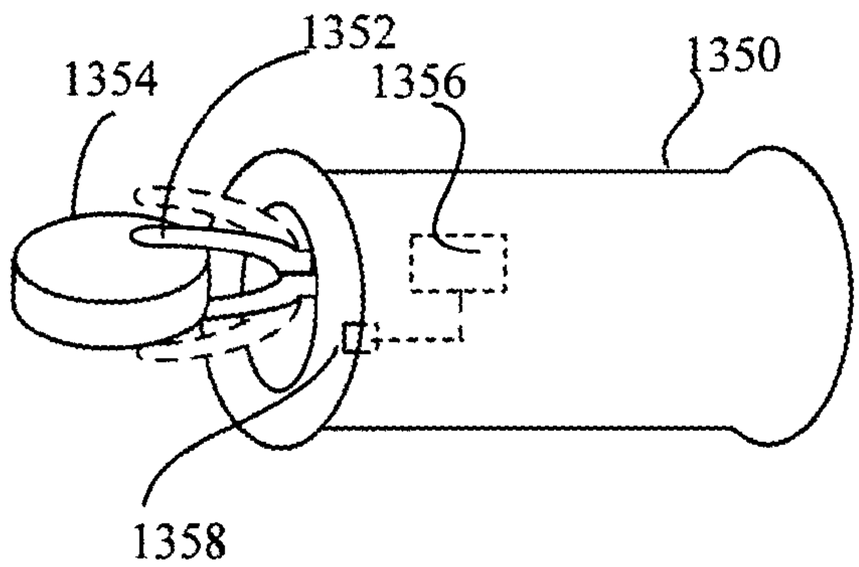

FIG. 24

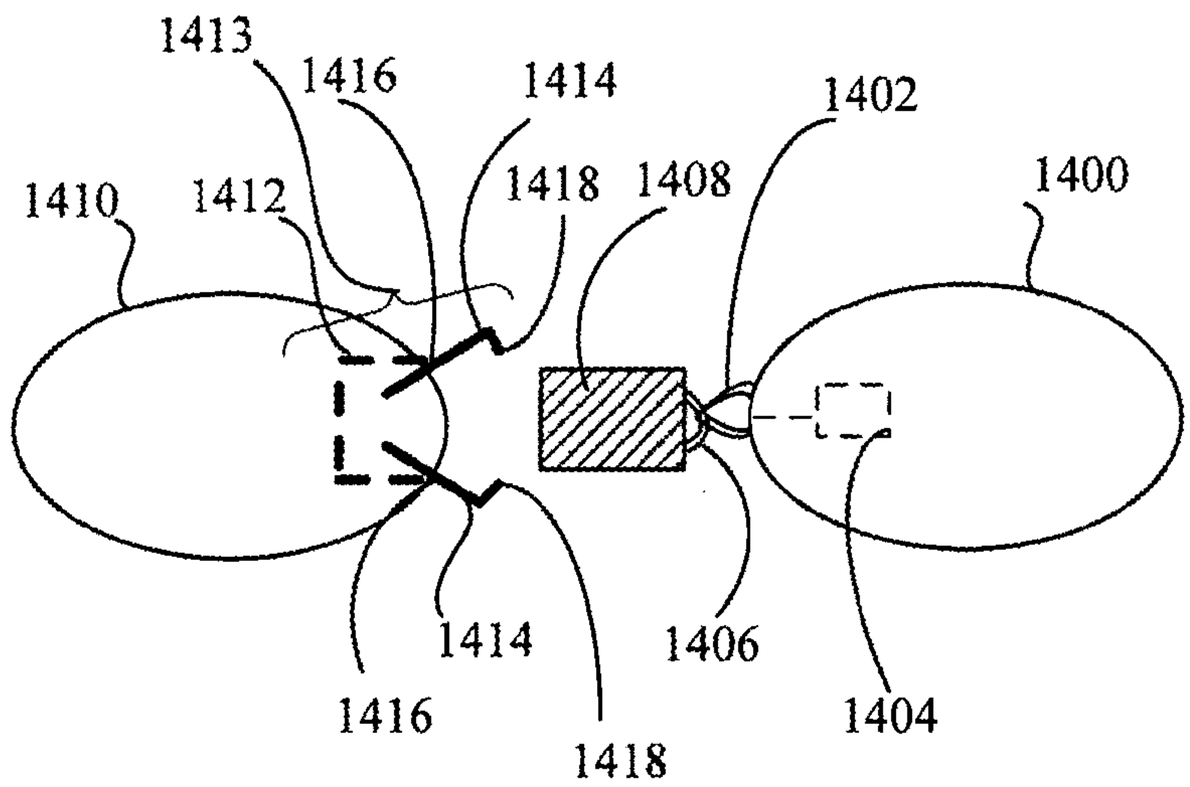

FIG. 25A

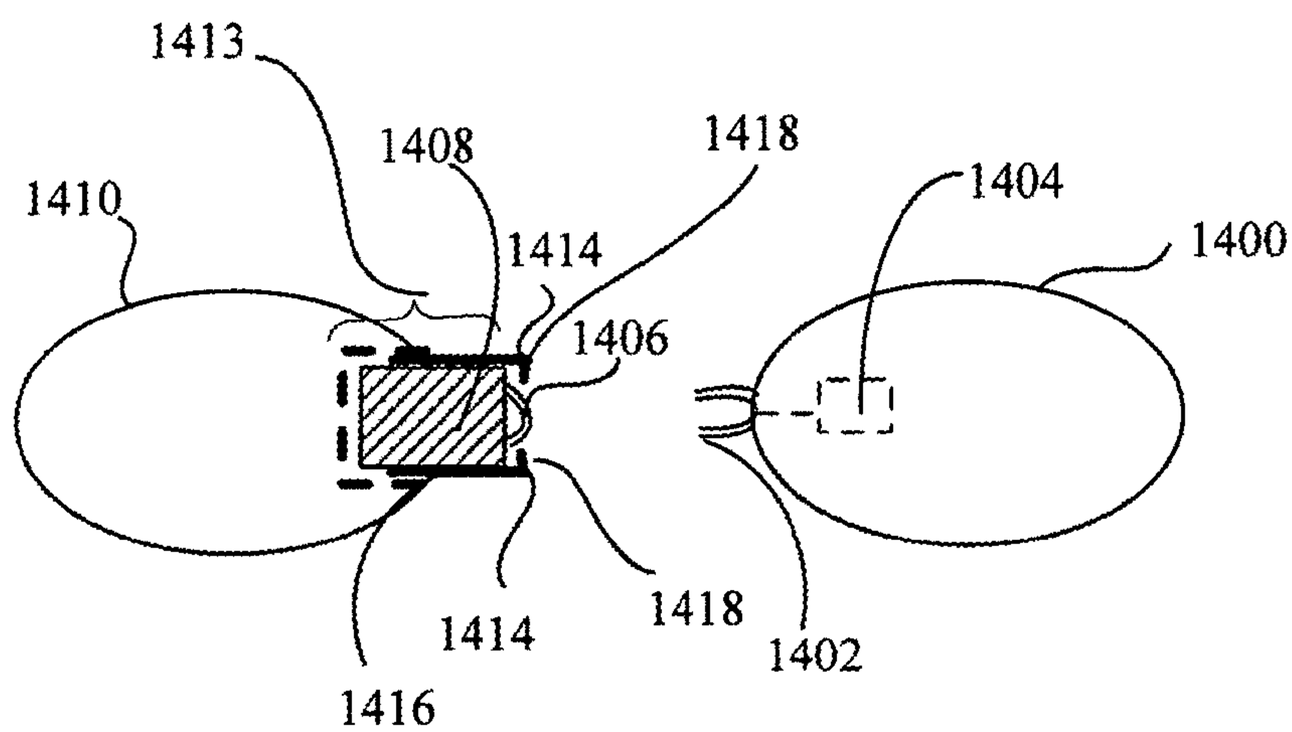

FIG. 25B

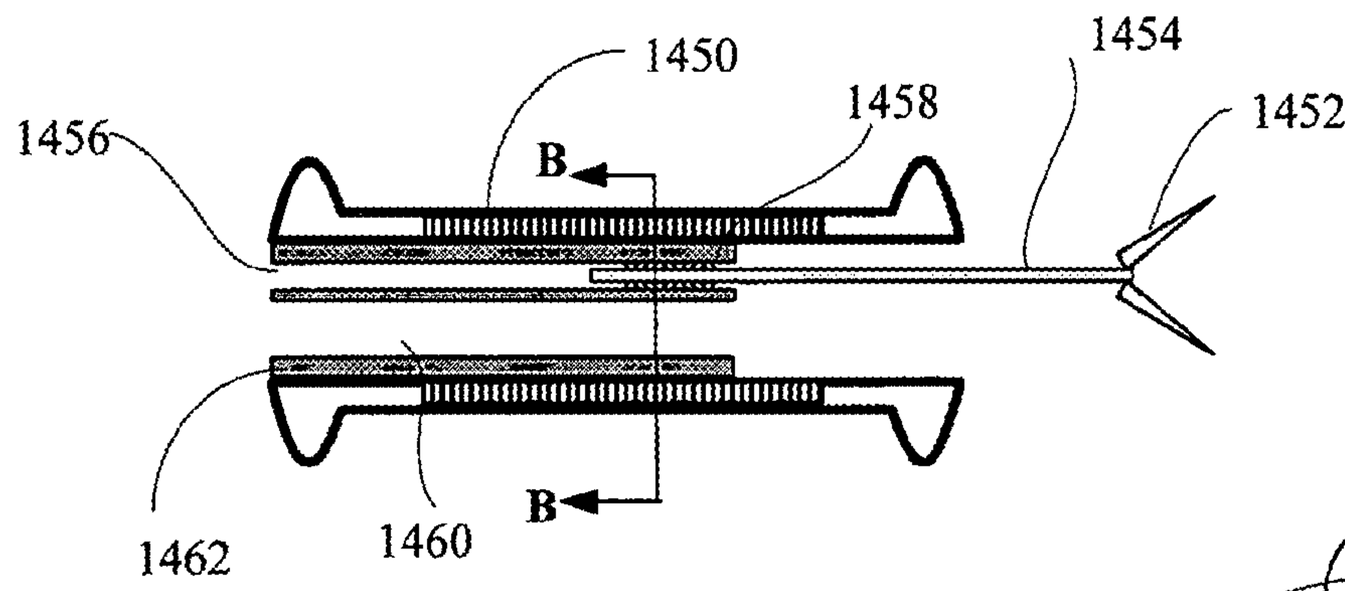

FIG. 26A

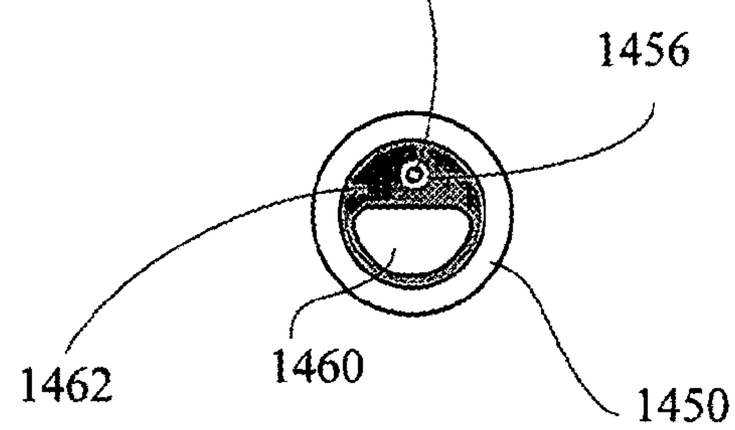

FIG. 26B

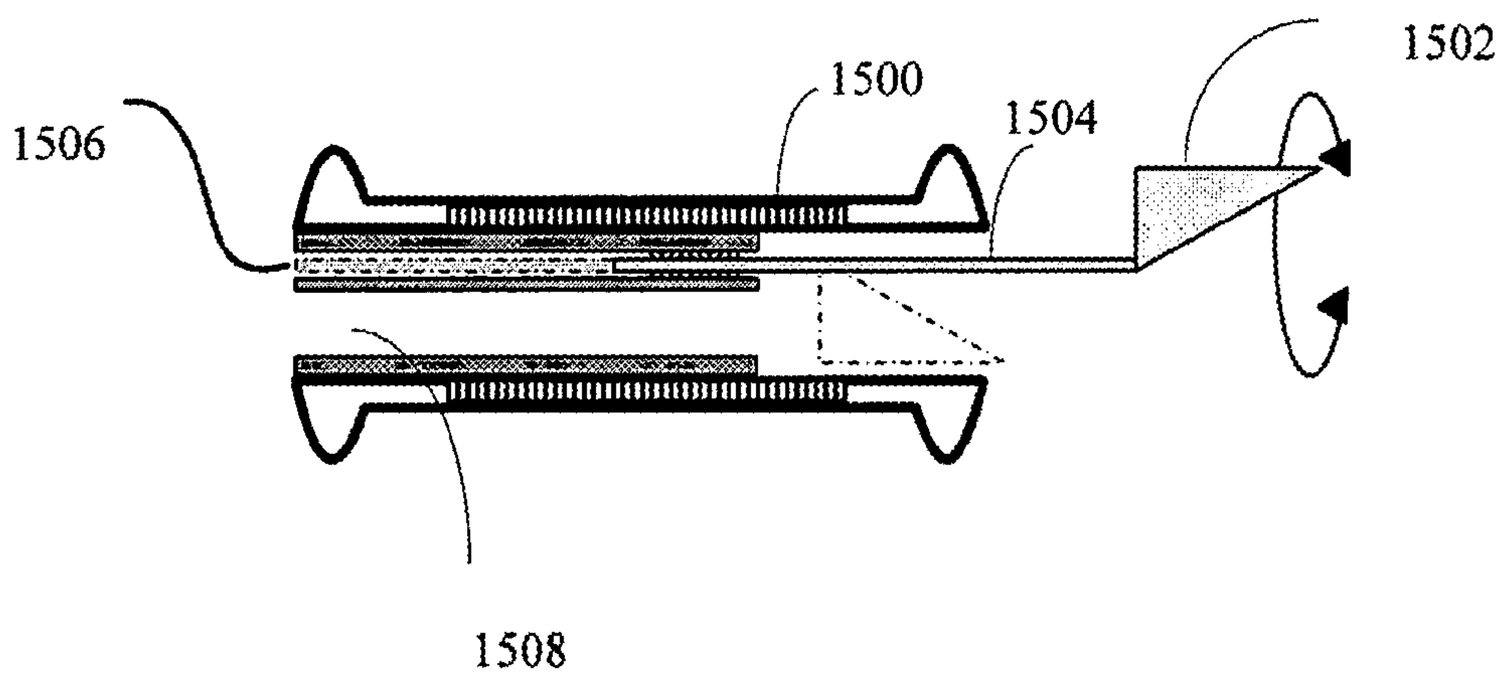

FIG. 27

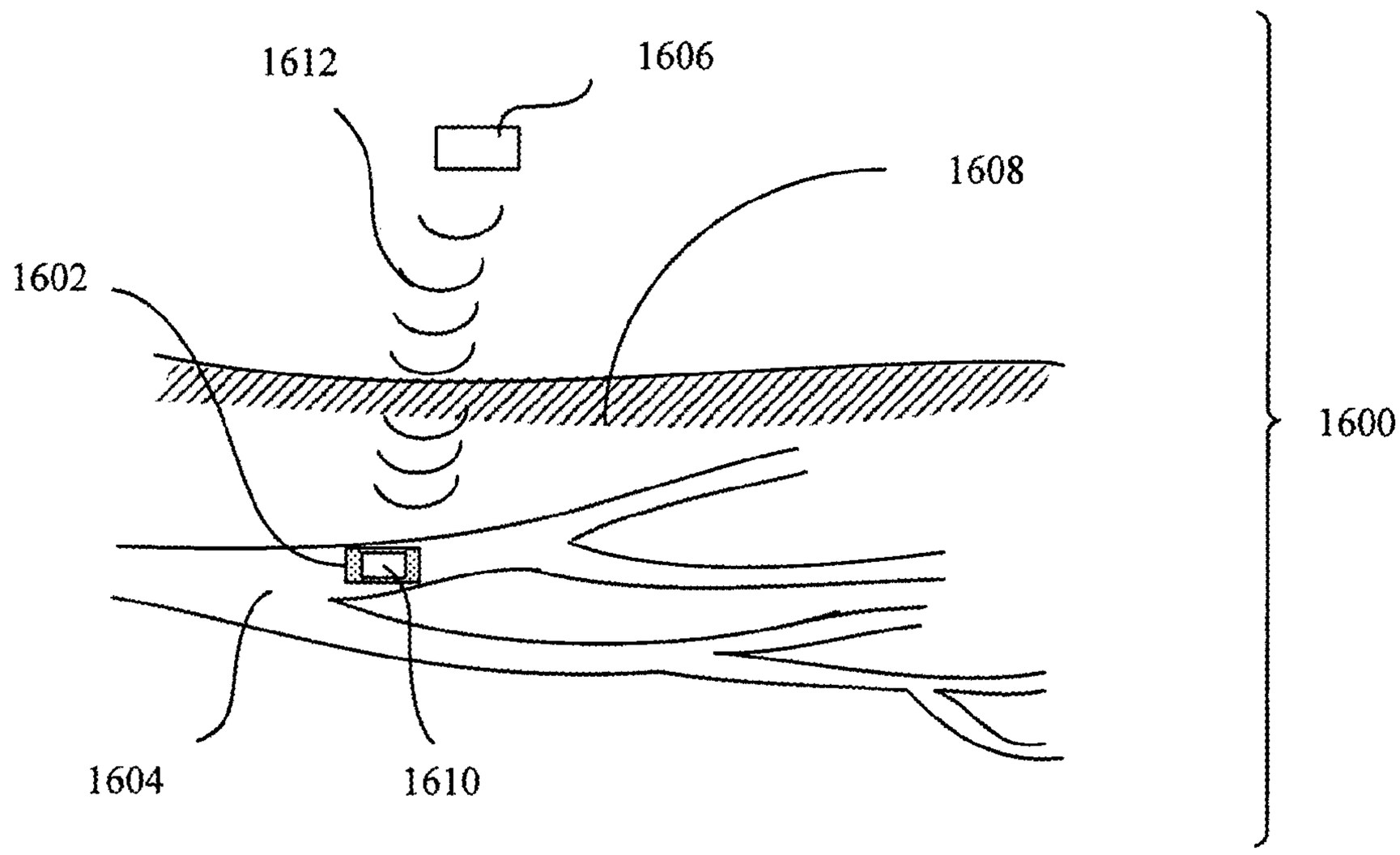

FIG. 28

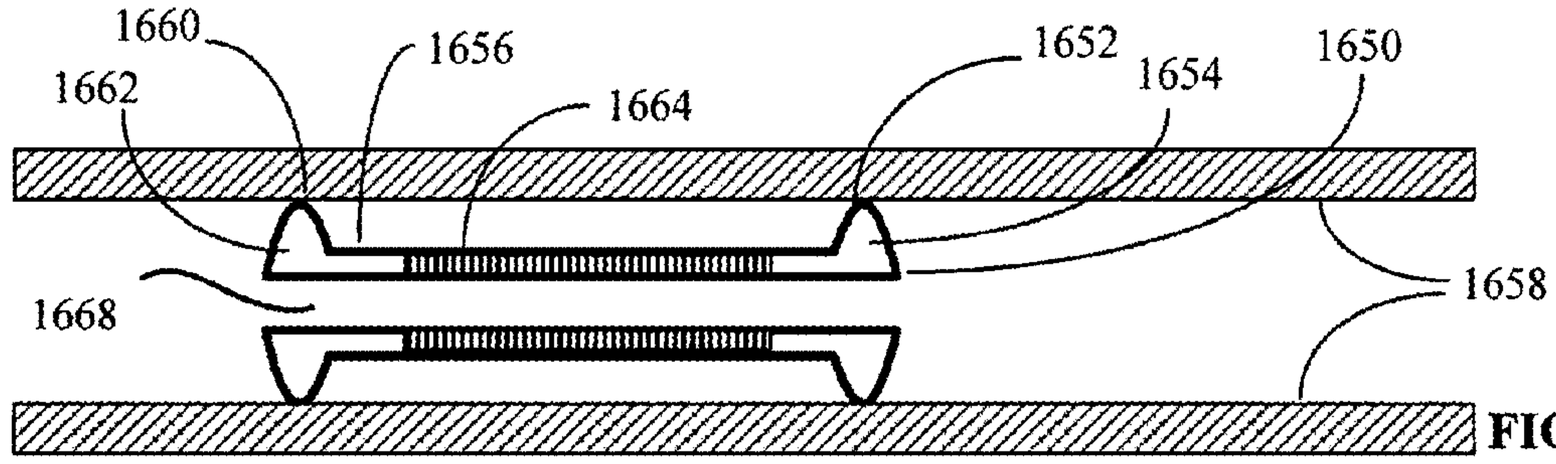

FIG. 29A

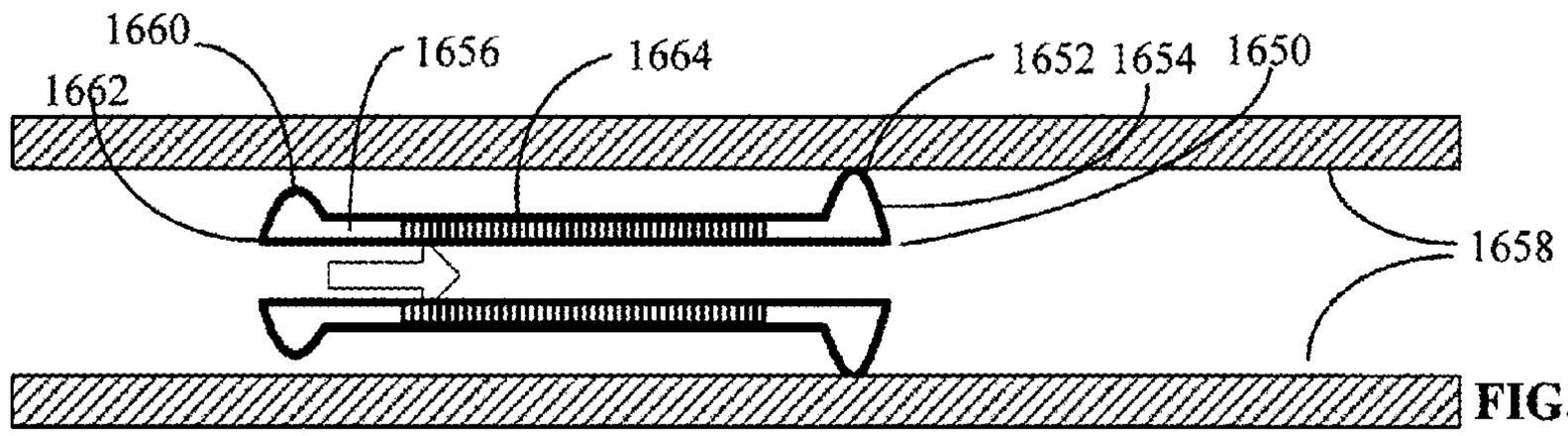

FIG. 29B

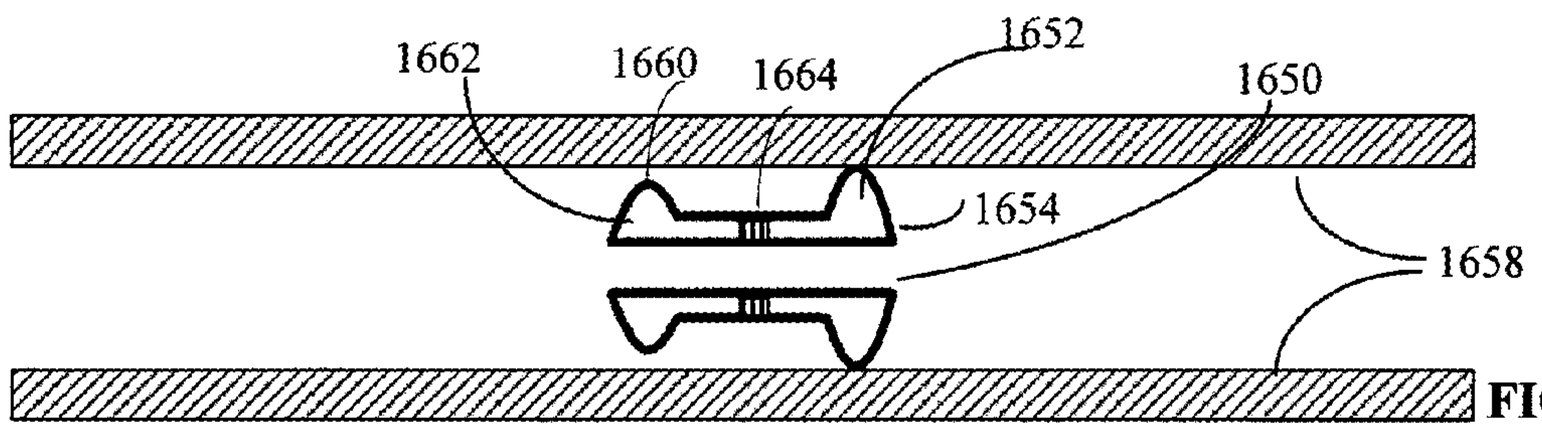

FIG. 29C

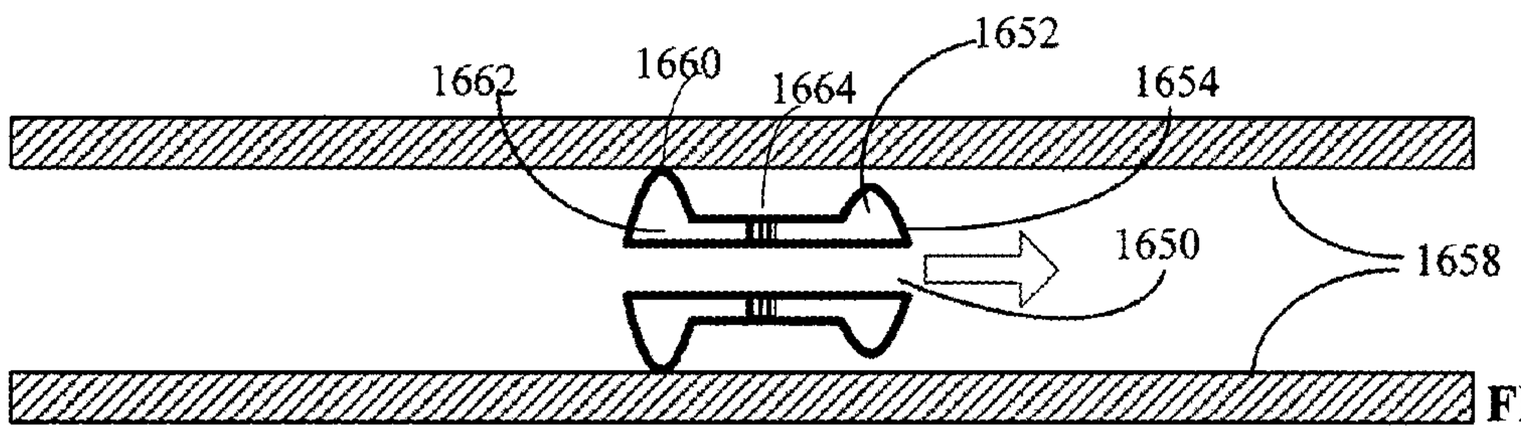

FIG. 29D

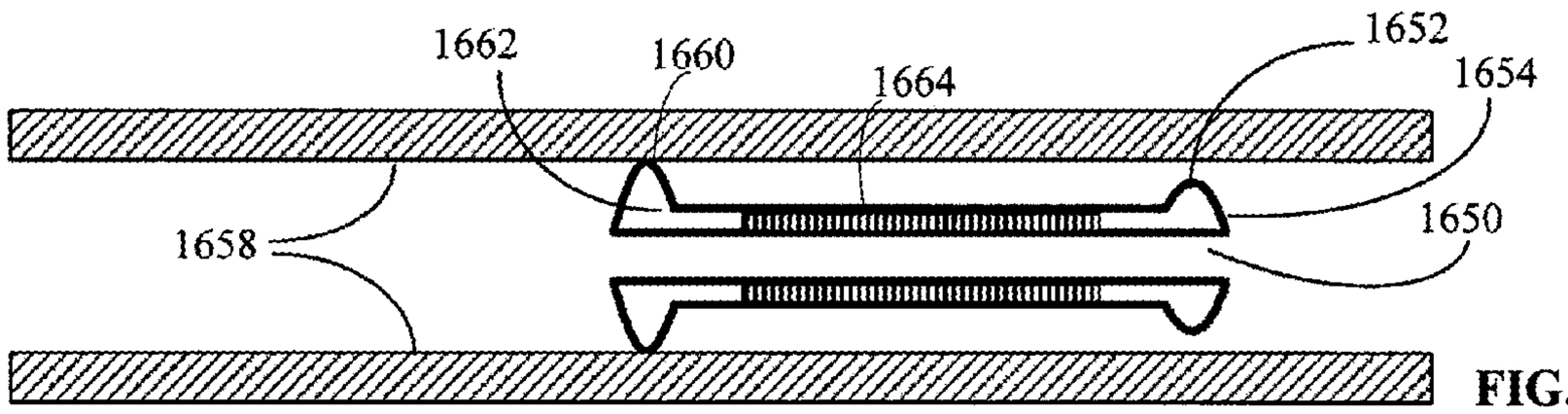

FIG. 29E

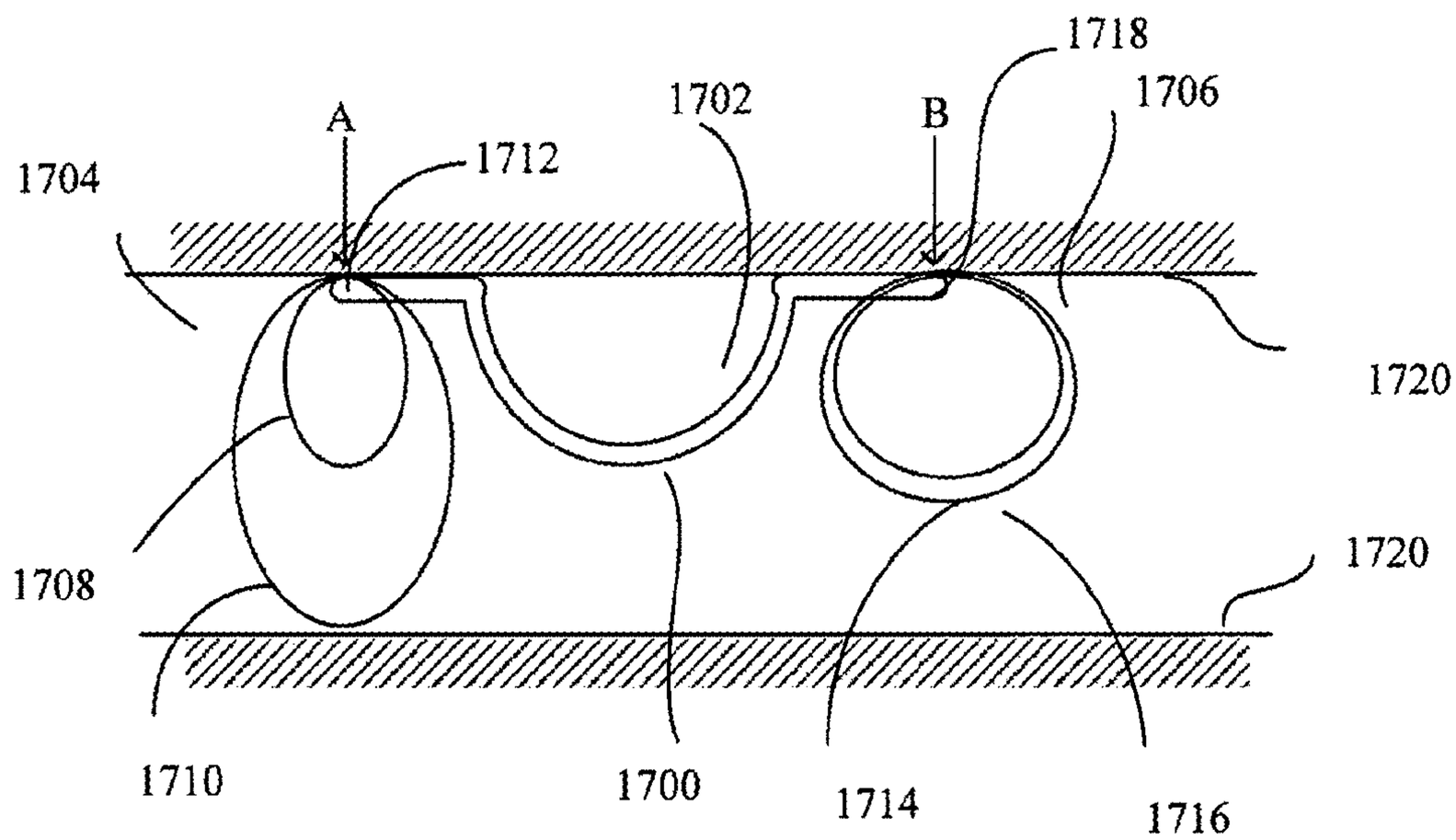

FIG. 30A

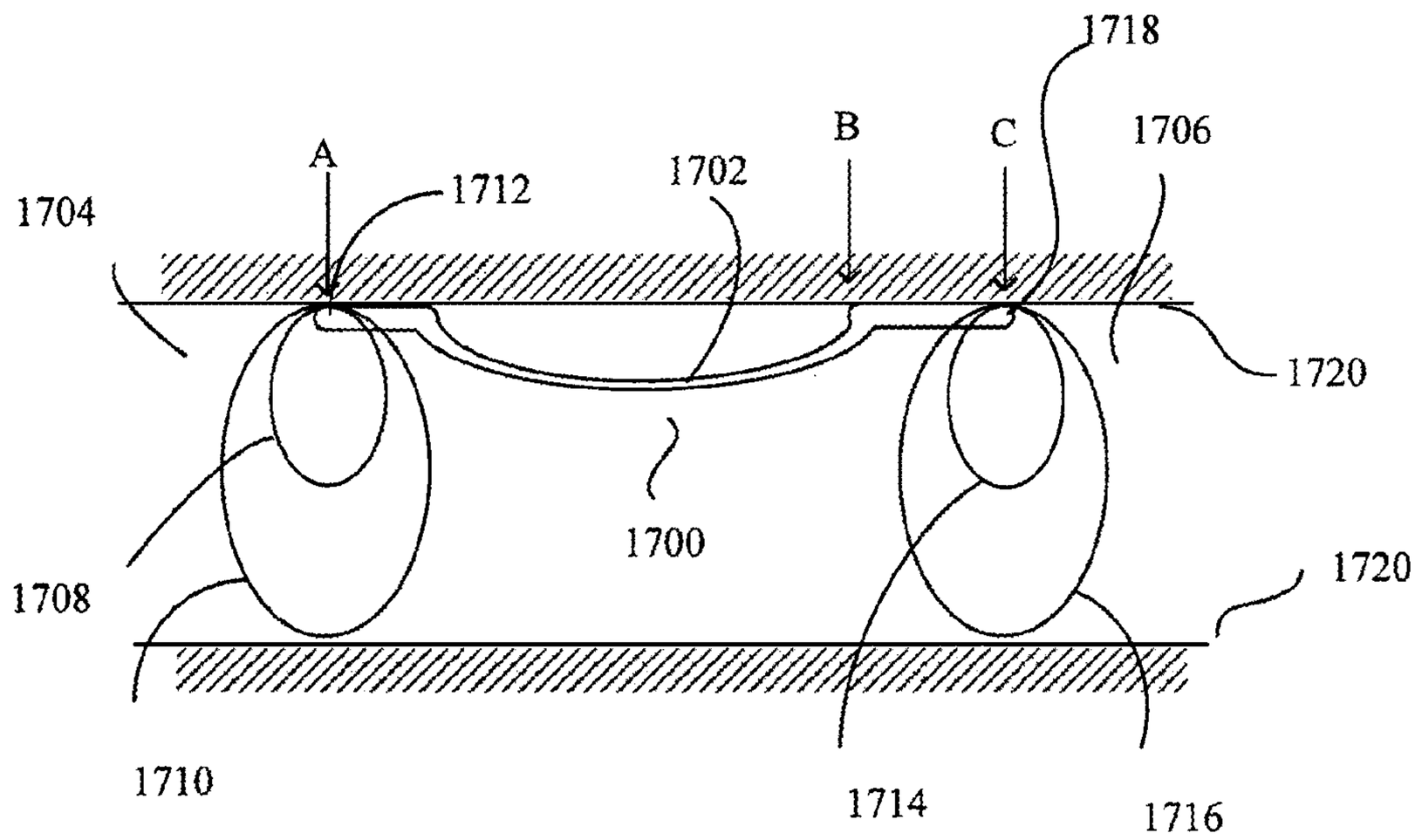

FIG. 30B

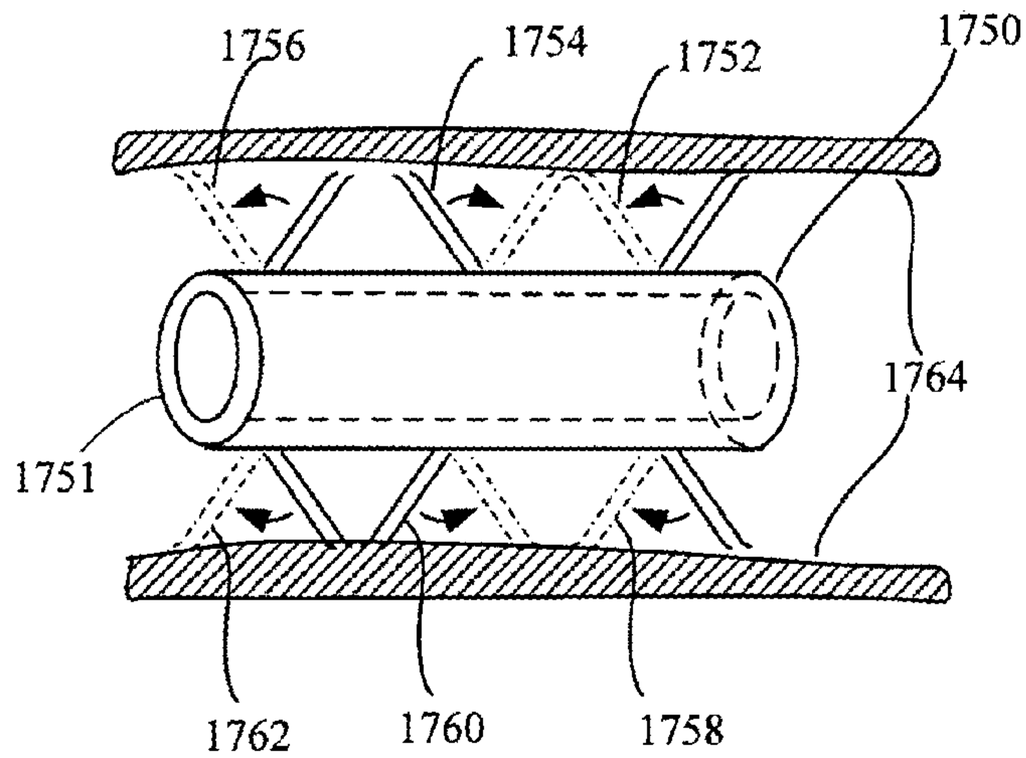

FIG. 31

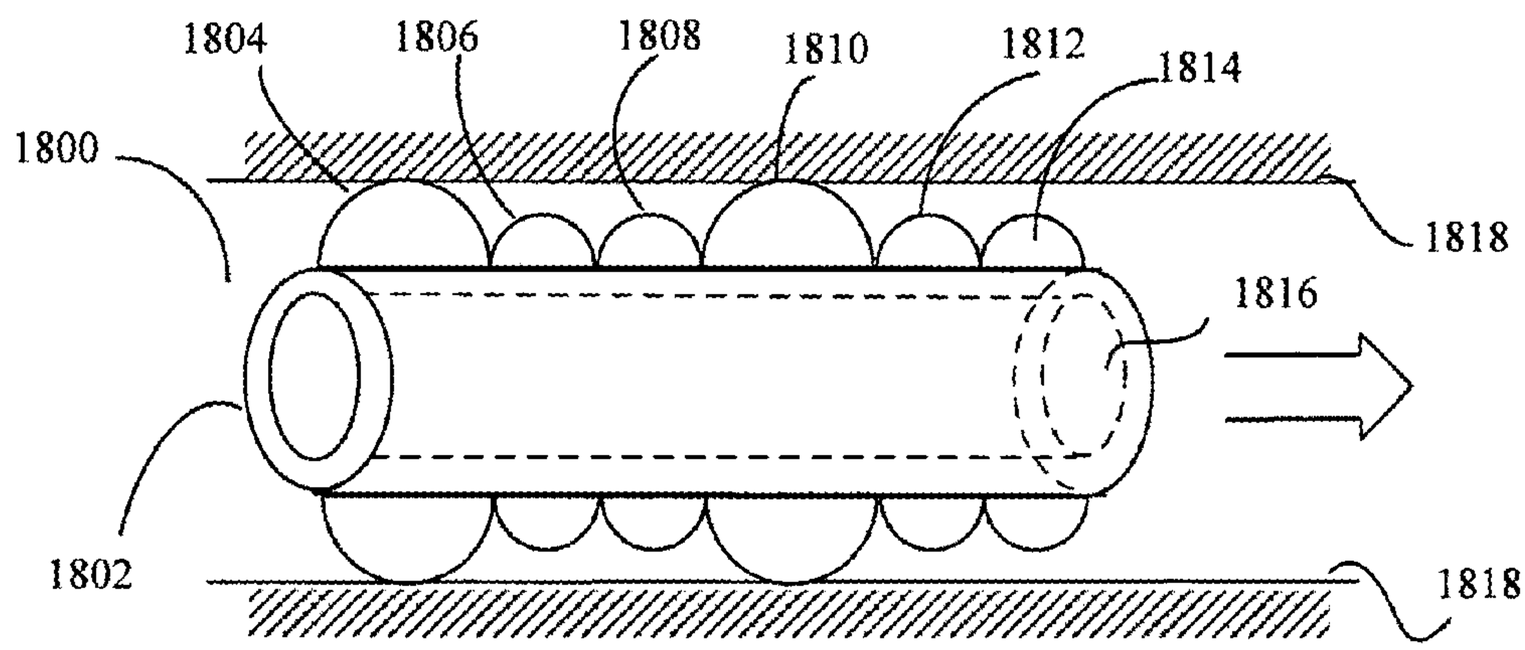

FIG. 32A

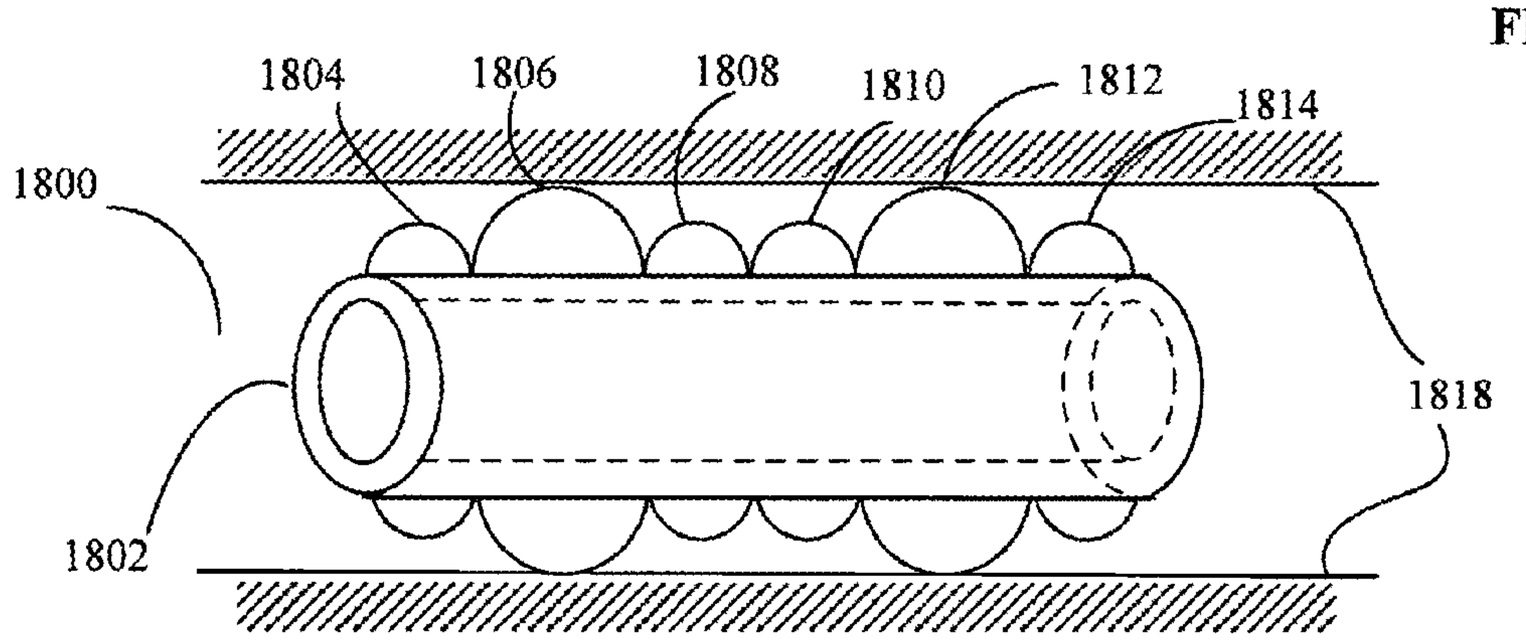

FIG. 32B

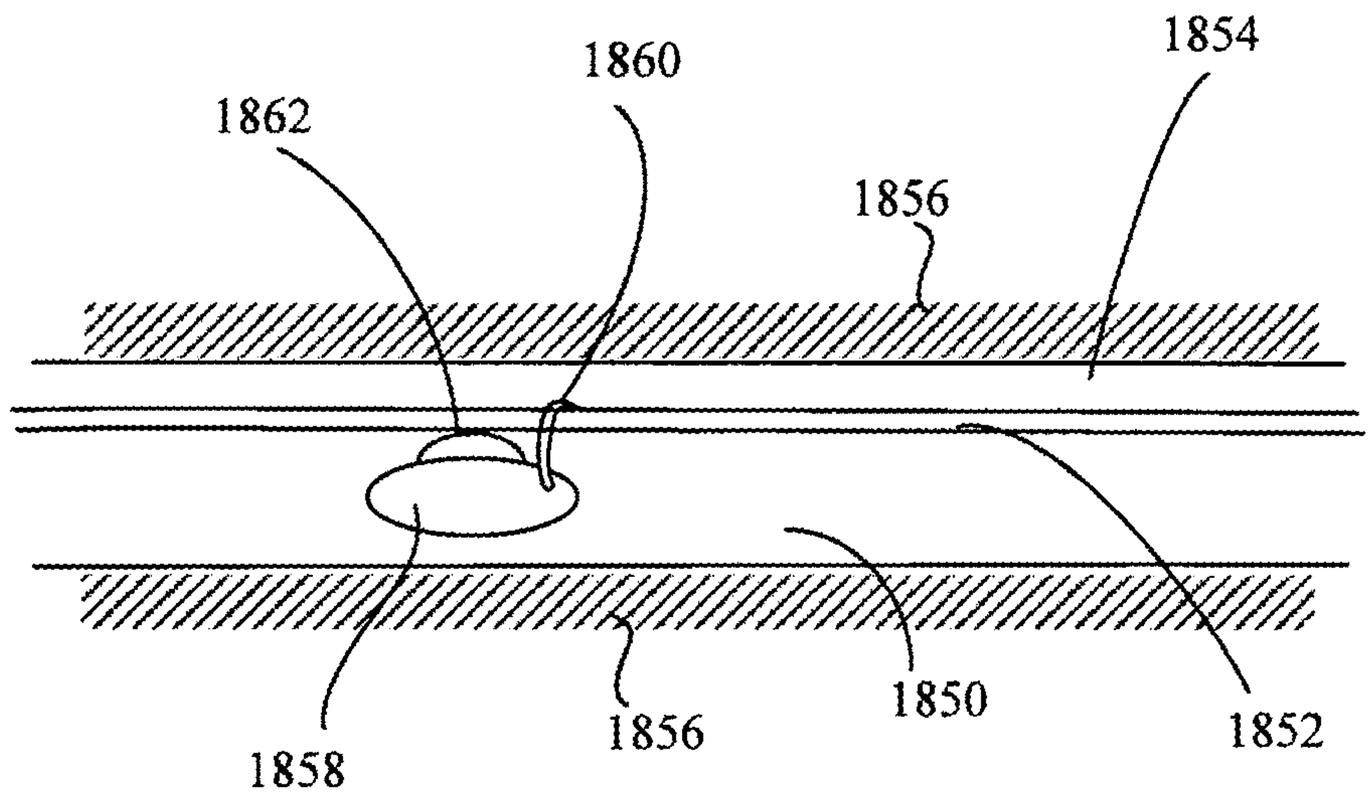

FIG. 33

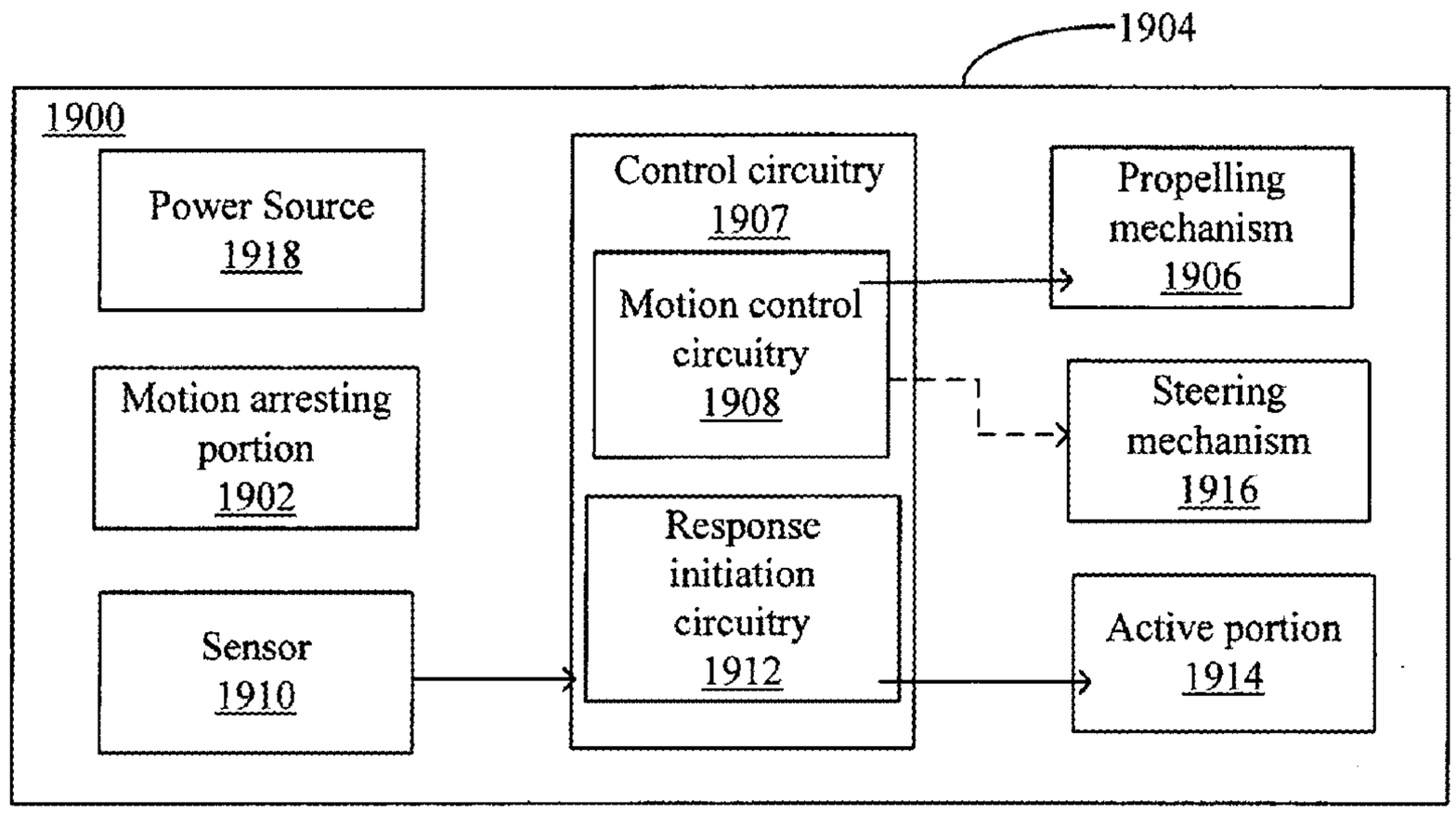
1904
1900
Power Source
1918
Motion arresting portion
1902
Sensor
1910
Control circuitry
1907
Motion control circuitry
1908
Response initiation circuitry
1912
Propelling mechanism
1906
Steering mechanism
1916
Active portion
1914

FIG. 34

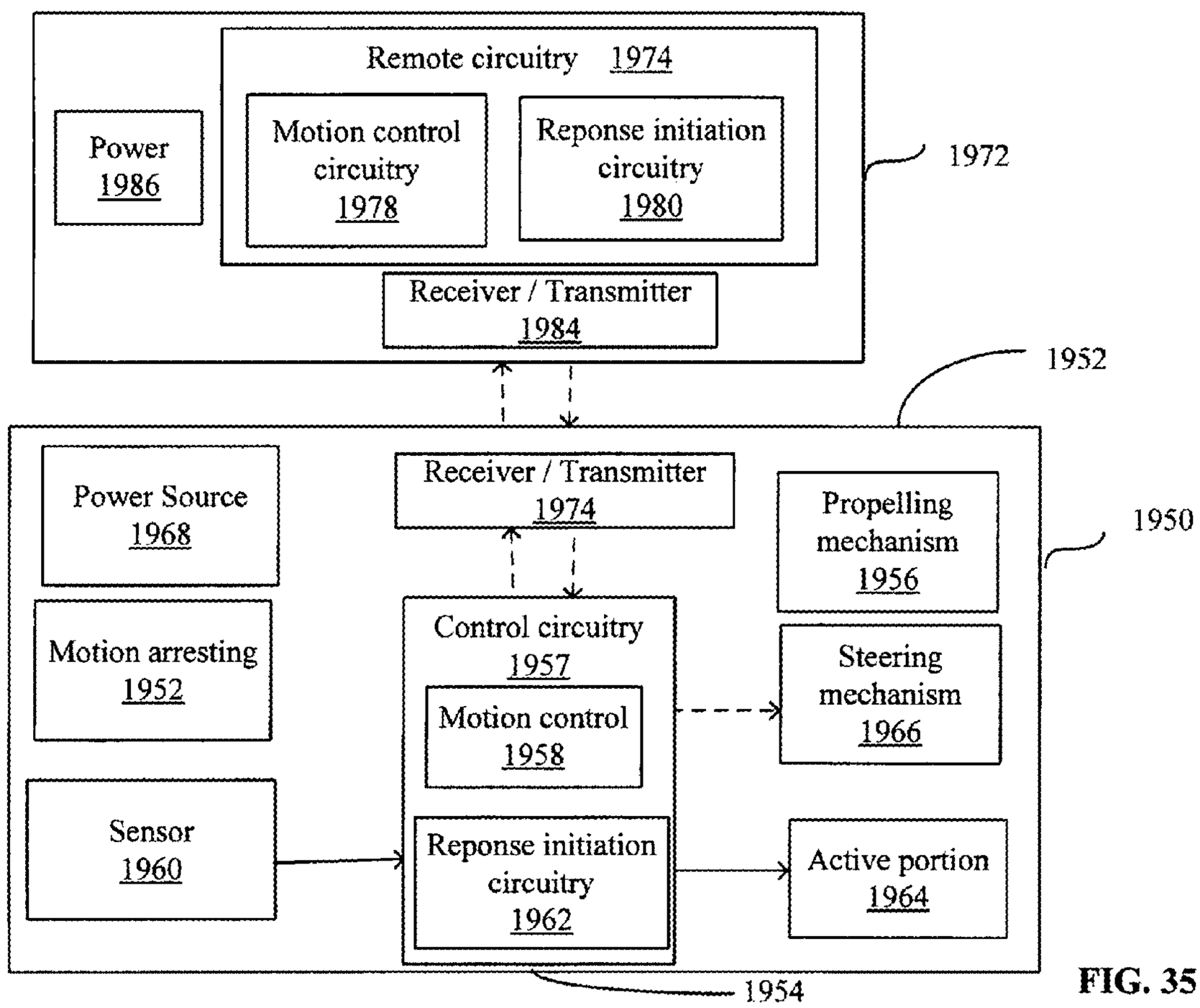
Remote circuitry 1974
Power
1986
Motion control circuitry
1978
Reponse initiation circuitry
1980
Receiver / Transmitter
1984
1972
1952
Power Source
1968
Receiver / Transmitter
1974
Propelling mechanism
1956
1950
Motion arresting
1952
Control circuitry
1957
Motion control
1958
Steering mechanism
1966
Sensor
1960
Reponse initiation circuitry
1962
Active portion
1964
1954

FIG. 35

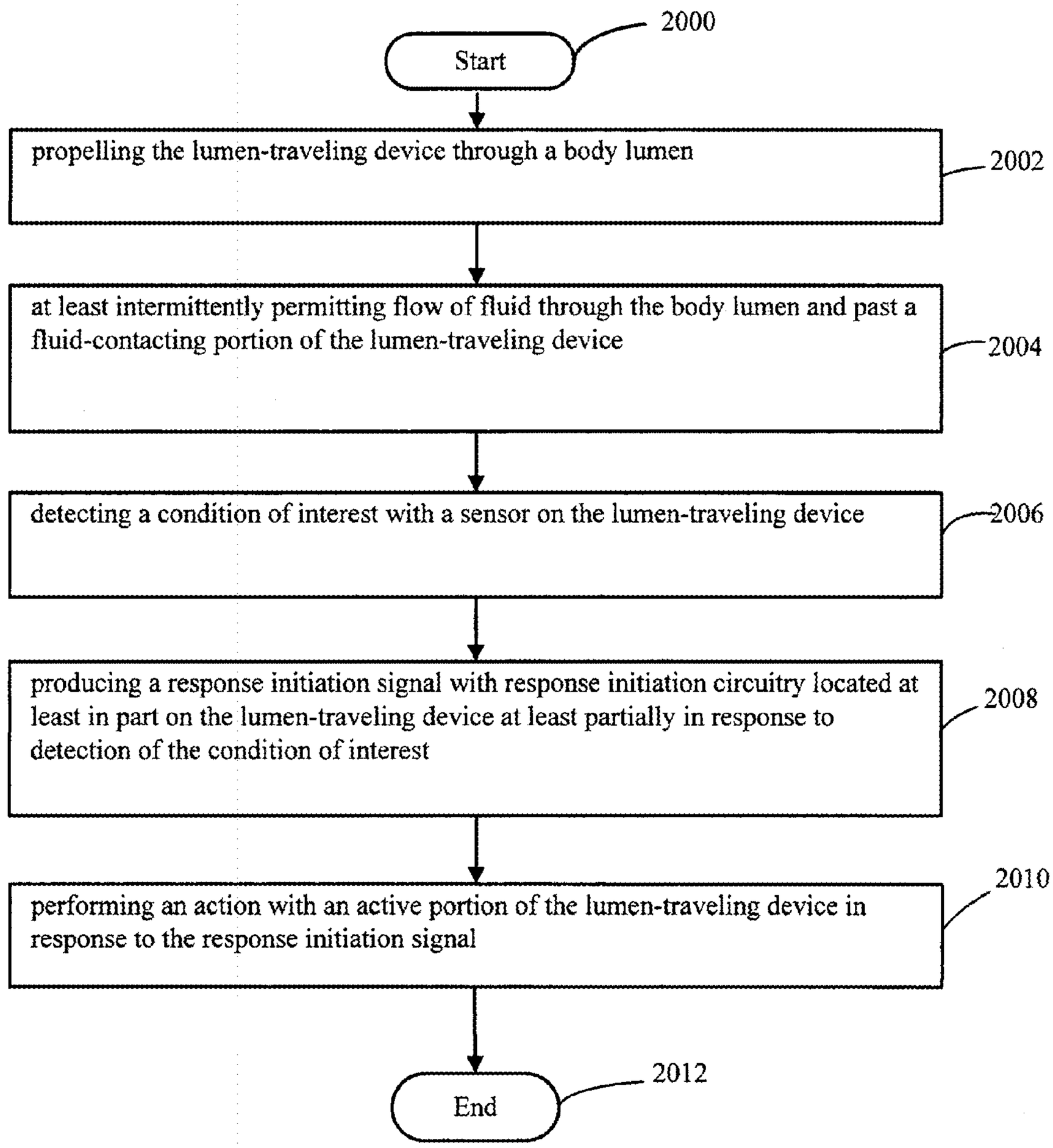
Start
2000
propelling the lumen-traveling device through a body lumen
2002
at least intermittently permitting flow of fluid through the body lumen and past a fluid-contacting portion of the lumen-traveling device
2004
detecting a condition of interest with a sensor on the lumen-traveling device
2006
producing a response initiation signal with response initiation circuitry located at least in part on the lumen-traveling device at least partially in response to detection of the condition of interest
2008
performing an action with an active portion of the lumen-traveling device in response to the response initiation signal
2010
End
2012

FIG. 36

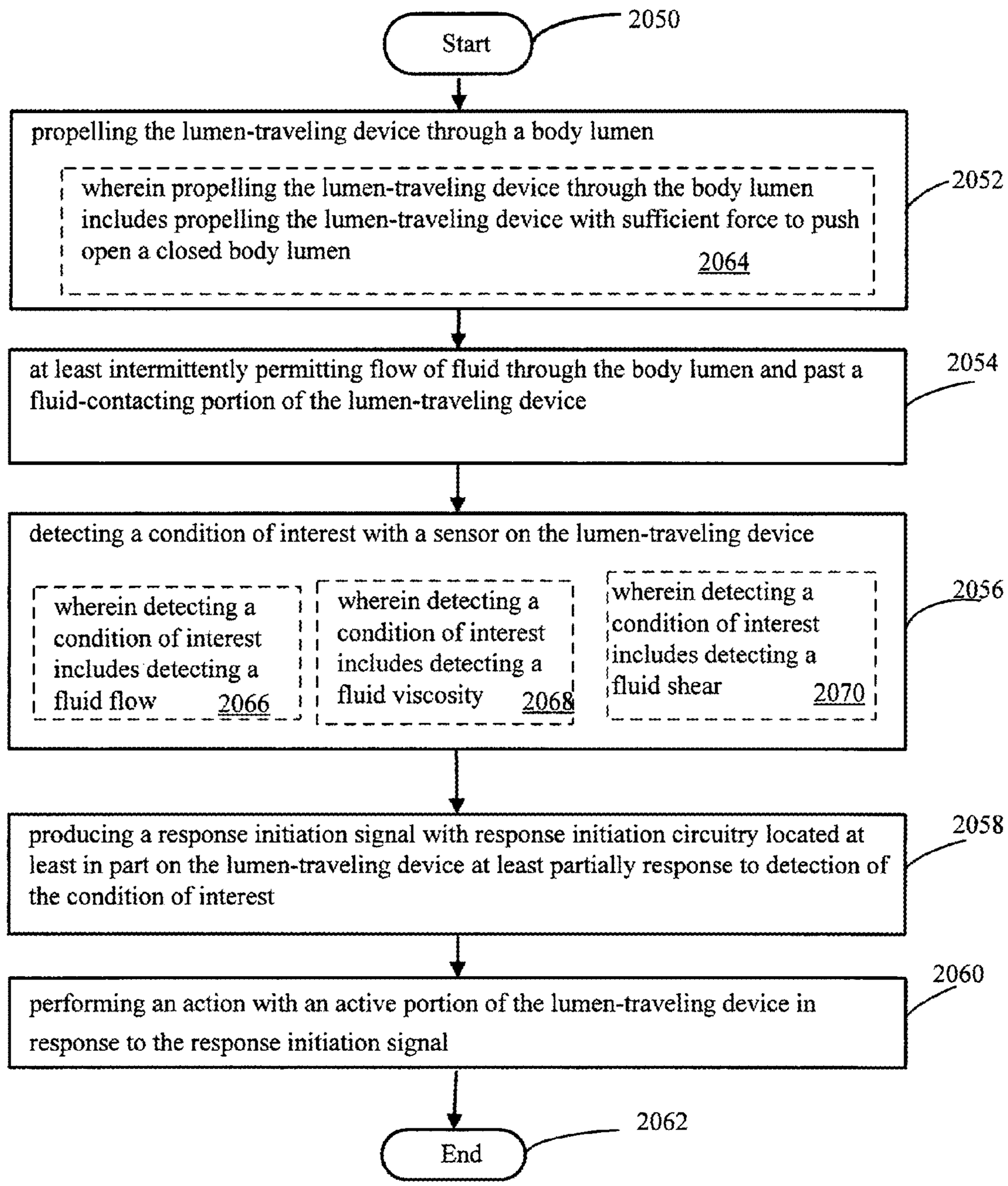
Start
2050
propelling the lumen-traveling device through a body lumen
wherein propelling the lumen-traveling device through the body lumen includes propelling the lumen-traveling device with sufficient force to push open a closed body lumen
2064
2052
at least intermittently permitting flow of fluid through the body lumen and past a fluid-contacting portion of the lumen-traveling device
2054
detecting a condition of interest with a sensor on the lumen-traveling device
wherein detecting a condition of interest includes detecting a fluid flow
2066
wherein detecting a condition of interest includes detecting a fluid viscosity
2068
wherein detecting a condition of interest includes detecting a fluid shear
2070
2056
producing a response initiation signal with response initiation circuitry located at least in part on the lumen-traveling device at least partially response to detection of the condition of interest
2058
performing an action with an active portion of the lumen-traveling device in response to the response initiation signal
2060
End
2062

FIG. 37

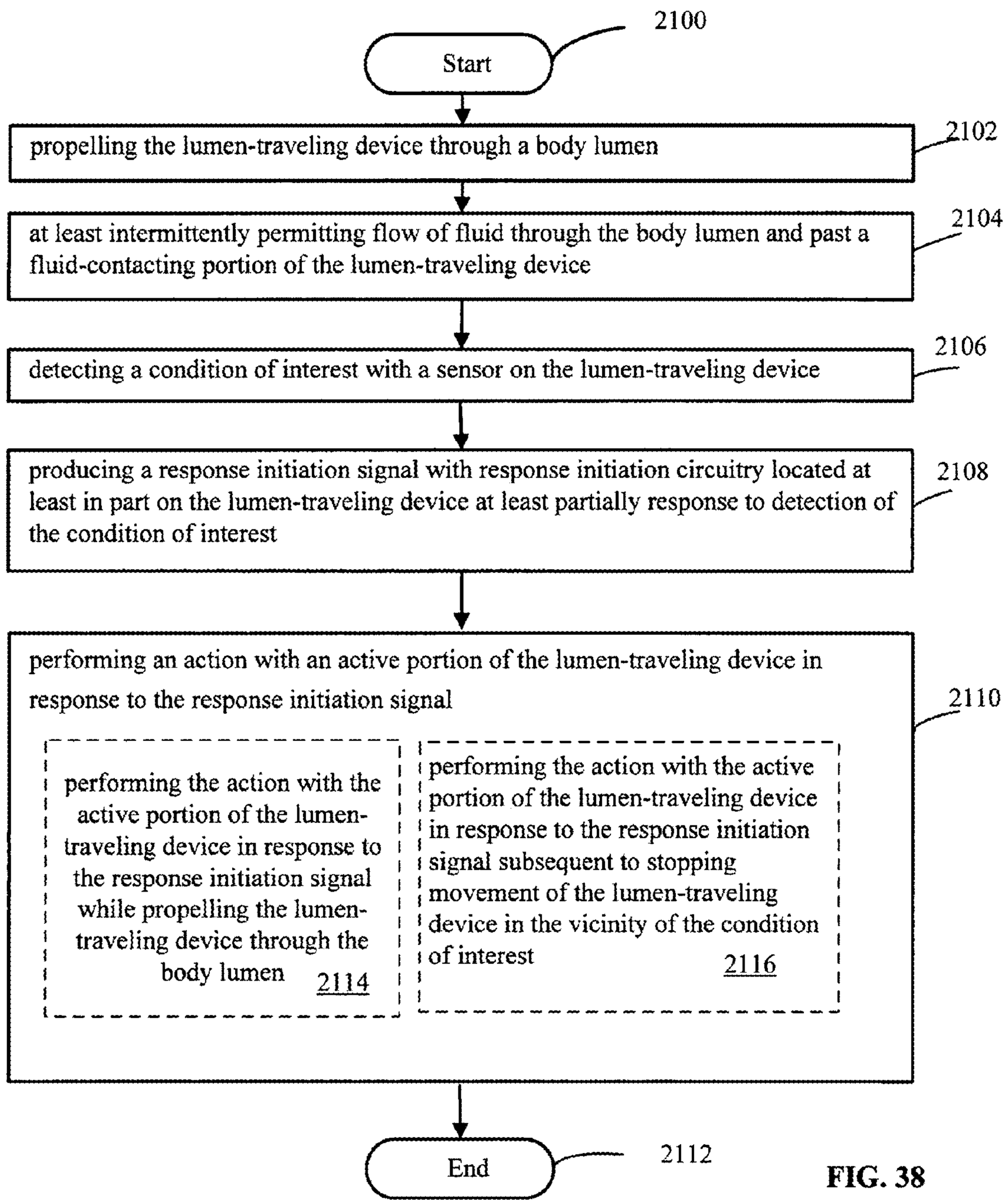
2100
Start
propelling the lumen-traveling device through a body lumen
2102
at least intermittently permitting flow of fluid through the body lumen and past a fluid-contacting portion of the lumen-traveling device
2104
detecting a condition of interest with a sensor on the lumen-traveling device
2106
producing a response initiation signal with response initiation circuitry located at least in part on the lumen-traveling device at least partially response to detection of the condition of interest
2108
performing an action with an active portion of the lumen-traveling device in response to the response initiation signal
2110
performing the action with the active portion of the lumen-traveling device in response to the response initiation signal while propelling the lumen-traveling device through the body lumen
2114
performing the action with the active portion of the lumen-traveling device in response to the response initiation signal subsequent to stopping movement of the lumen-traveling device in the vicinity of the condition of interest
2116
End
2112

FIG. 38

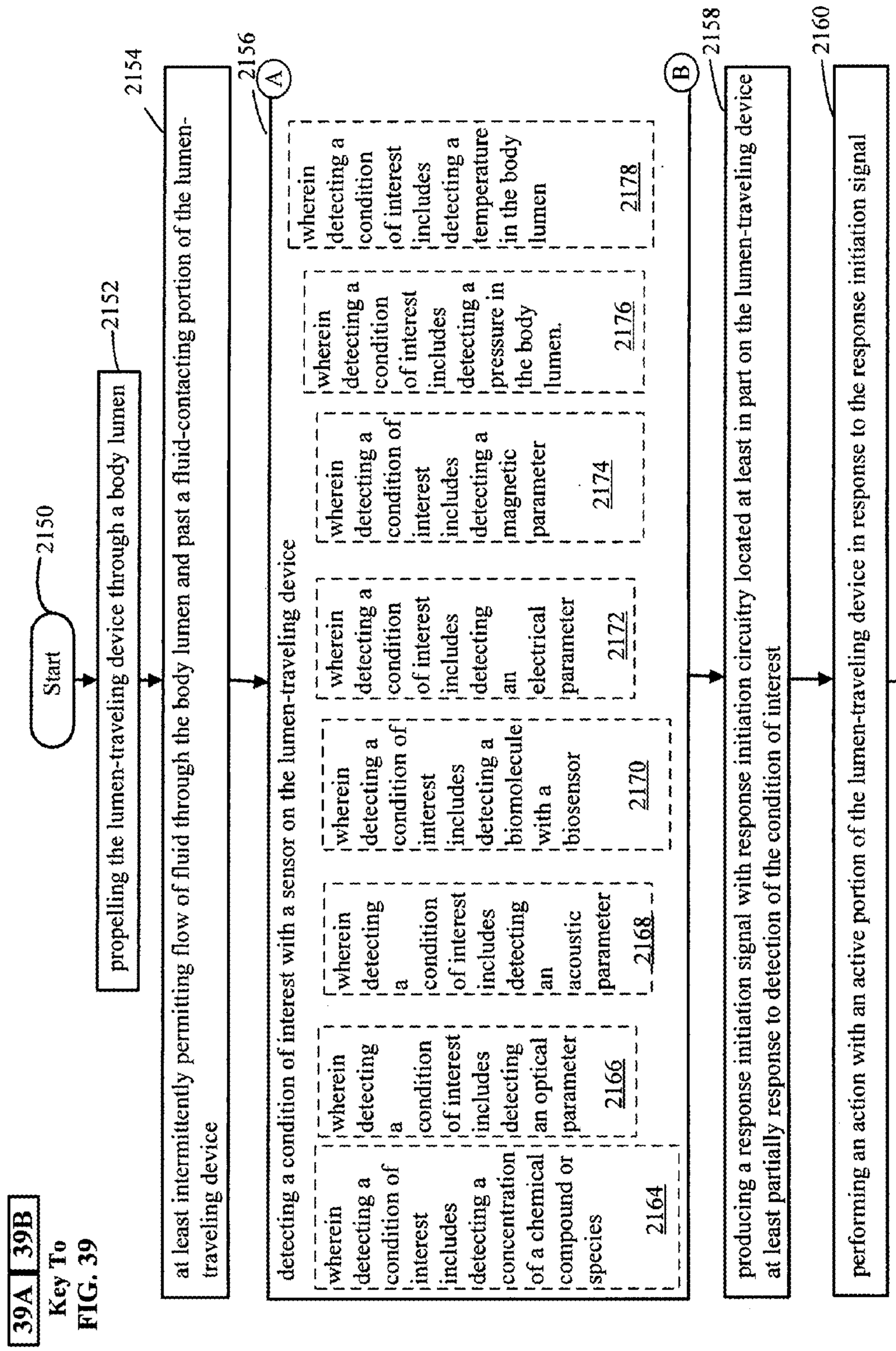
39A 39B
Key To
FIG. 39
Start
2150
propelling the lumen-traveling device through a body lumen
2152
at least intermittently permitting flow of fluid through the body lumen and past a fluid-contacting portion of the lumen-traveling device
2154
A
2156
detecting a condition of interest with a sensor on the lumen-traveling device
wherein detecting a condition of interest includes detecting a concentration of a chemical compound or species
2164
wherein detecting a condition of interest includes detecting an optical parameter
2166
wherein detecting a condition of interest includes detecting an acoustic parameter
2168
wherein detecting a condition of interest includes detecting an electrical parameter
2172
wherein detecting a condition of interest includes detecting a biomolecule with a biosensor
2170
wherein detecting a condition of interest includes detecting a magnetic parameter
2174
wherein detecting a condition of interest includes detecting a pressure in the body lumen.
2176
wherein detecting a condition of interest includes detecting a temperature in the body lumen
2178
B
producing a response initiation signal with response initiation circuitry located at least in part on the lumen-traveling device
2158
at least partially response to detection of the condition of interest
performing an action with an active portion of the lumen-traveling device in response to the response initiation signal
2160
End
2162

FIG. 39A

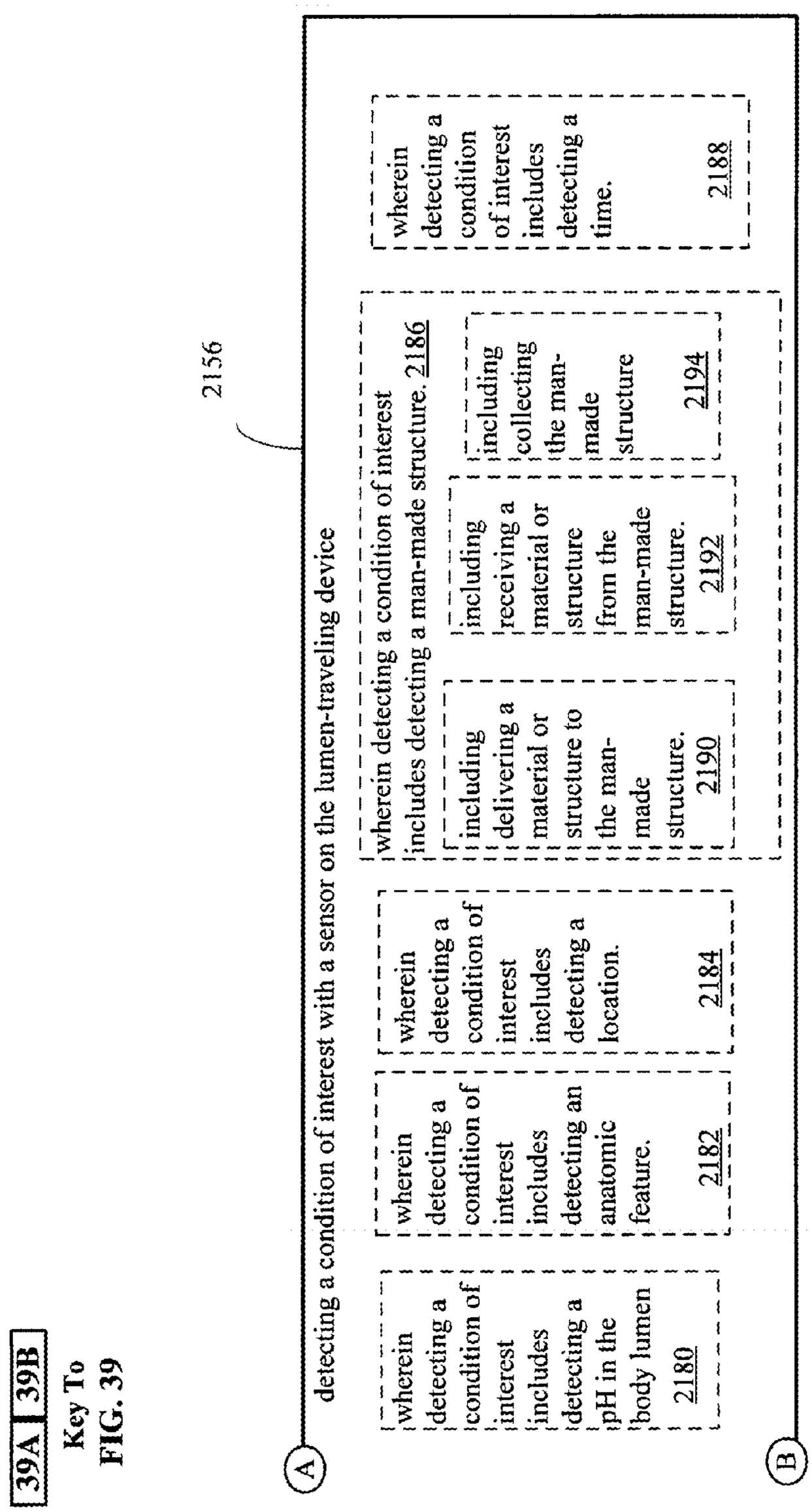
39A
39B
Key To
FIG. 39
2156
A
detecting a condition of interest with a sensor on the lumen-traveling device
wherein detecting a condition of interest includes detecting a pH in the body lumen 2180
wherein detecting a condition of interest includes detecting an anatomic feature. 2182
wherein detecting a condition of interest includes detecting a location. 2184
wherein detecting a condition of interest includes detecting a man-made structure. 2186
including delivering a material or structure to the man-made structure. 2190
including receiving a material or structure from the man-made structure. 2192
including collecting the man-made structure 2194
wherein detecting a condition of interest includes detecting a time. 2188
B

FIG. 39B

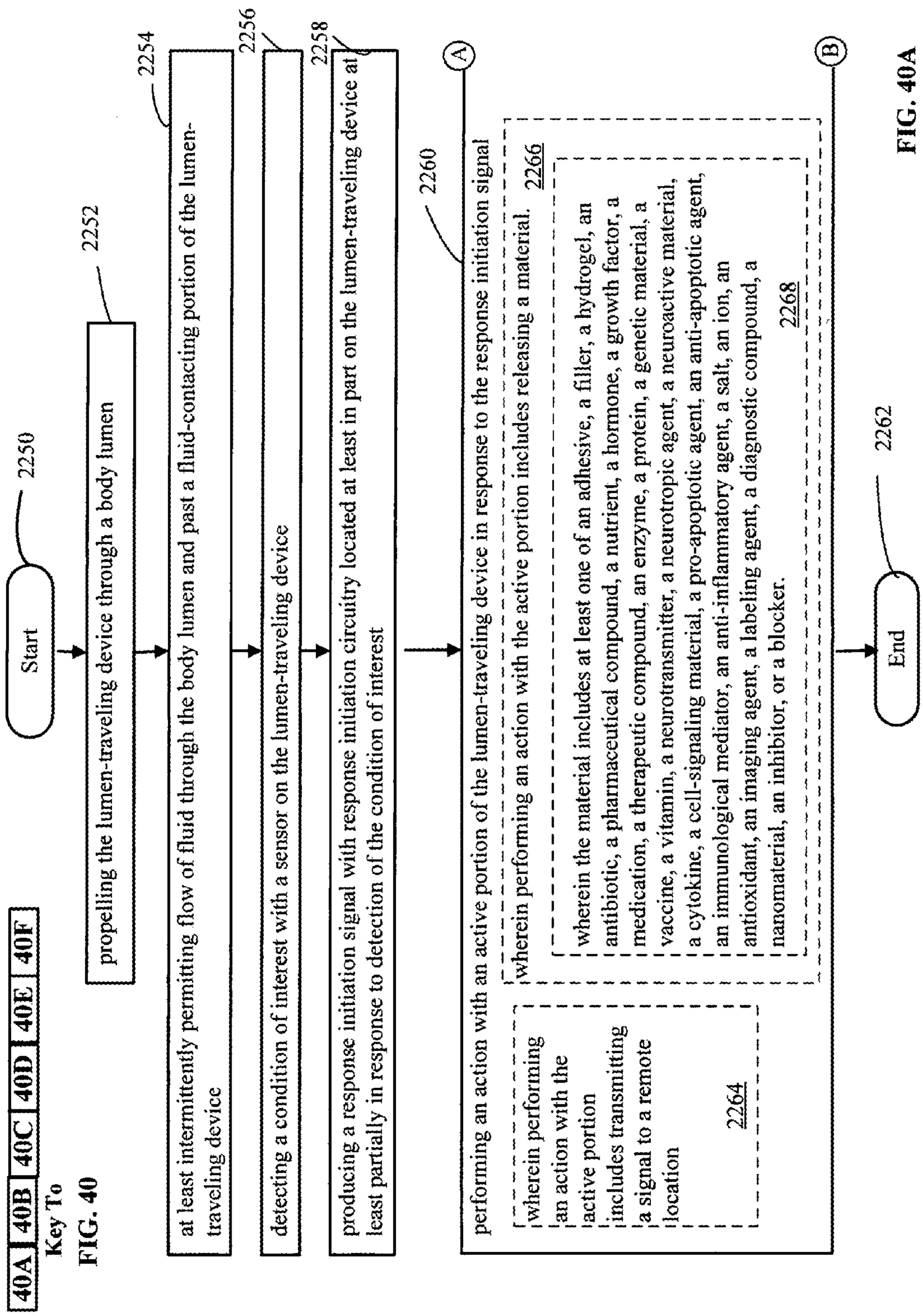
40A
40B
40C
40D
40E
40F
Key To
FIG. 40
Start
2250
propelling the lumen-traveling device through a body lumen
2252
at least intermittently permitting flow of fluid through the body lumen and past a fluid-contacting portion of the lumen-traveling device
2254
detecting a condition of interest with a sensor on the lumen-traveling device
2256
producing a response initiation signal with response initiation circuitry located at least in part on the lumen-traveling device at least partially in response to detection of the condition of interest
2258
performing an action with an active portion of the lumen-traveling device in response to the response initiation signal
2260
A
wherein performing an action with the active portion includes releasing a material.
2266
wherein the material includes at least one of an adhesive, a filler, a hydrogel, an antibiotic, a pharmaceutical compound, a nutrient, a hormone, a growth factor, a medication, a therapeutic compound, an enzyme, a protein, a genetic material, a vaccine, a vitamin, a neurotransmitter, a neurotropic agent, a neuroactive material, a cytokine, a cell-signaling material, a pro-apoptotic agent, an anti-apoptotic agent, an immunological mediator, an anti-inflammatory agent, a salt, an ion, an antioxidant, an imaging agent, a labeling agent, a diagnostic compound, a nanomaterial, an inhibitor, or a blocker.
2268
wherein performing an action with the active portion includes transmitting a signal to a remote location
2264
B
End
2262

FIG. 40A

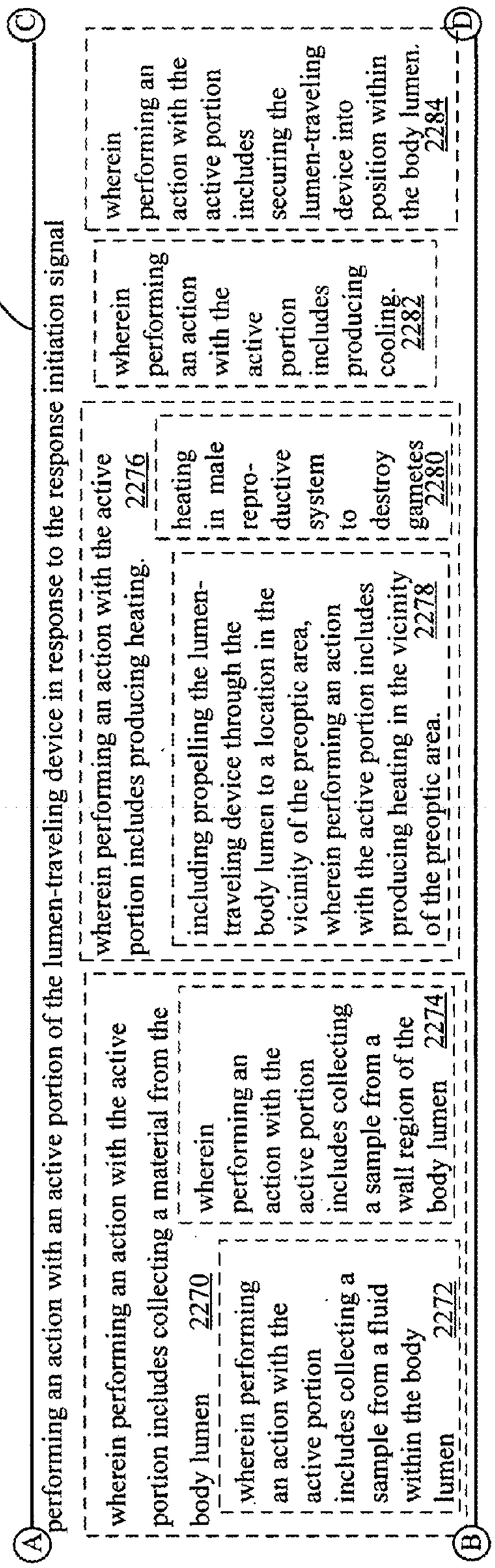

FIG. 40B

Key To
FIG. 40
32/91

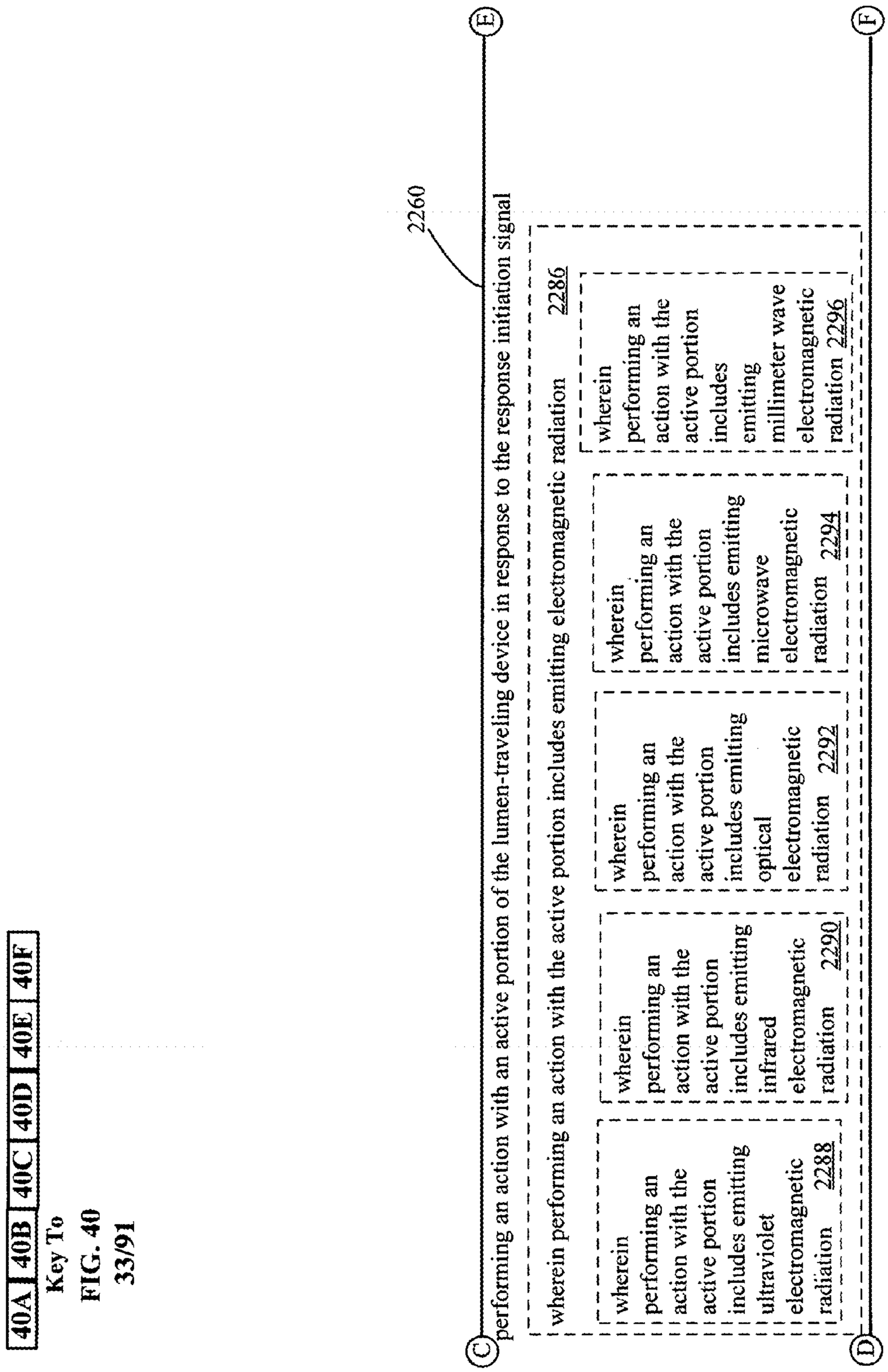
40A
40B
40C
40D
40E
40F
Key To
FIG. 40
33/91
E
F
2260
performing an action with an active portion of the lumen-traveling device in response to the response initiation signal
C
wherein performing an action with the active portion includes emitting electromagnetic radiation 2286
wherein performing an action with the active portion includes emitting ultraviolet electromagnetic radiation 2288
wherein performing an action with the active portion includes emitting infrared electromagnetic radiation 2290
wherein performing an action with the active portion includes emitting optical electromagnetic radiation 2292
wherein performing an action with the active portion includes emitting microwave electromagnetic radiation 2294
wherein performing an action with the active portion includes emitting millimeter wave electromagnetic radiation 2296
D

FIG. 40C

40A	40B	40C	40D	40E	40F

Key To
FIG.40
34/91

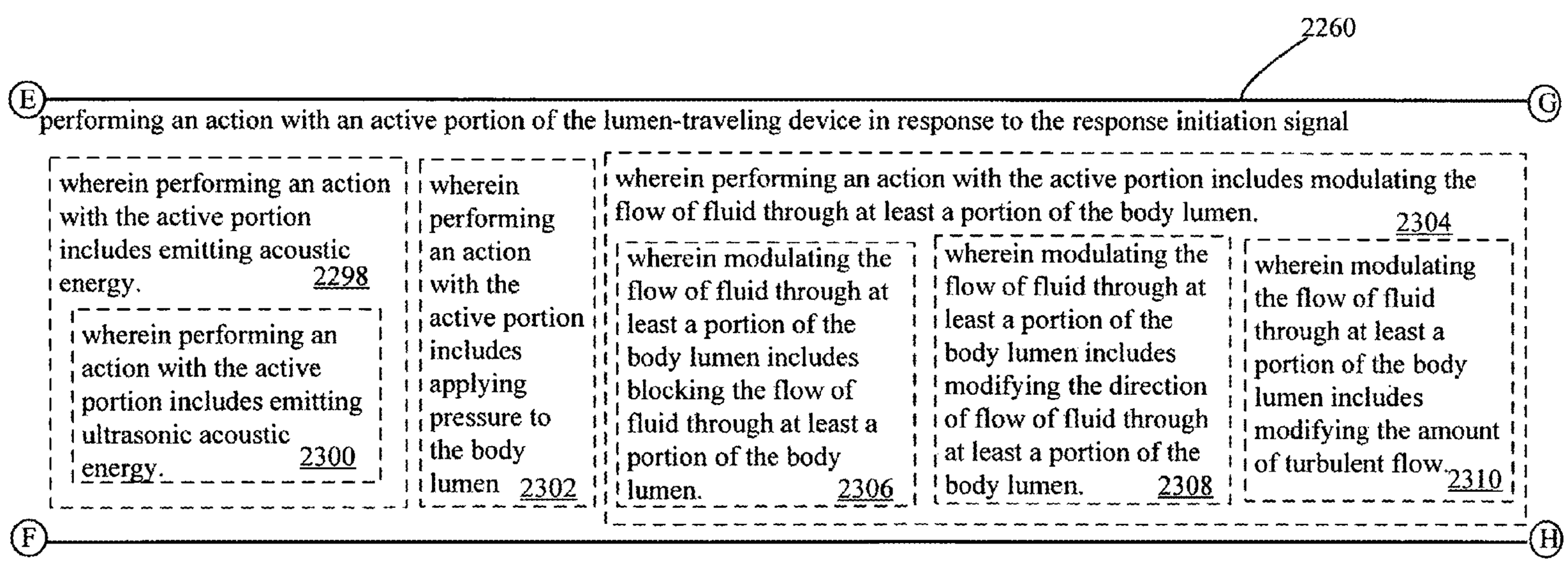

FIG. 40D

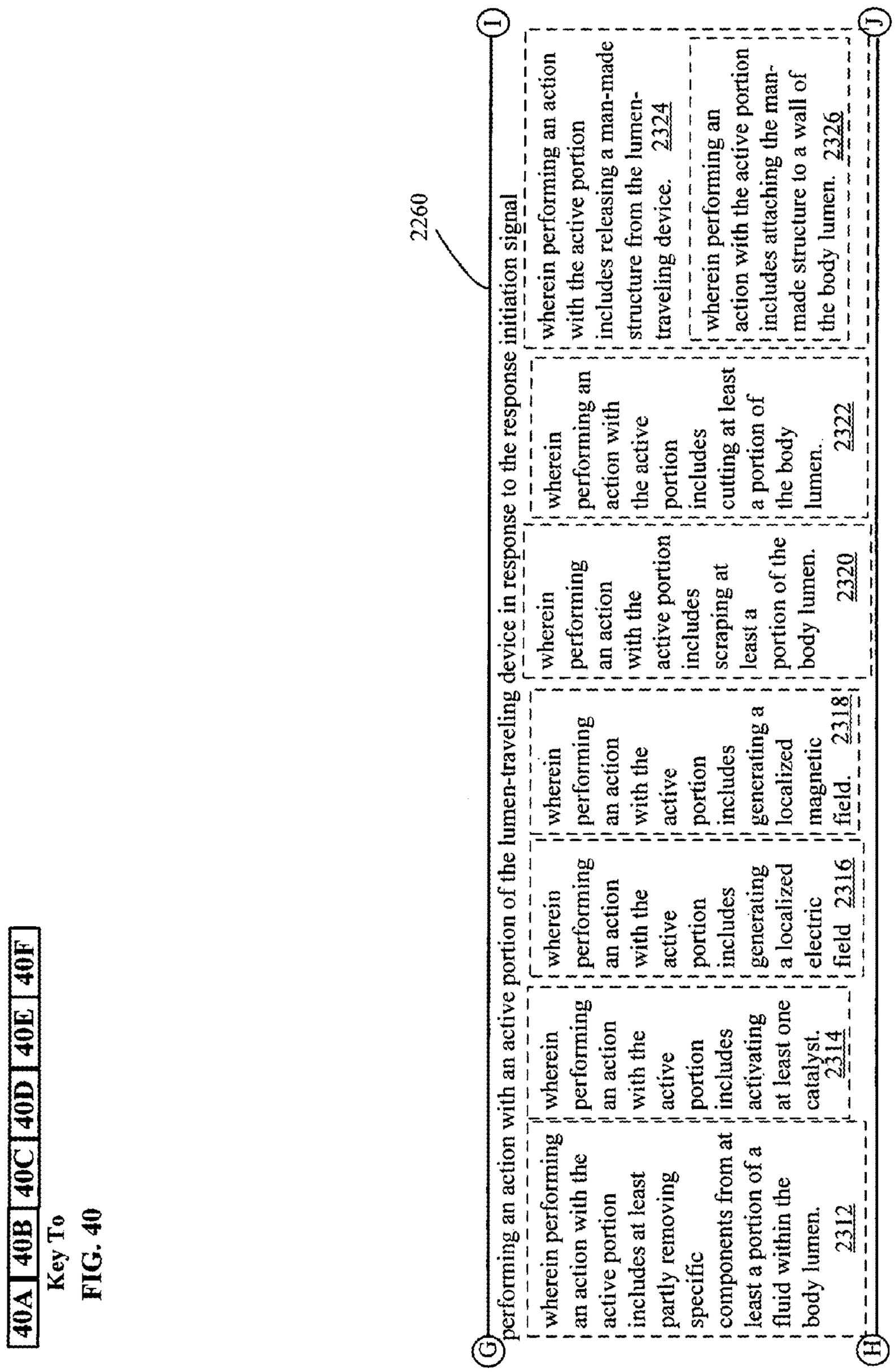
40A
40B
40C
40D
40E
40F
Key To
FIG. 40
2260
I
J
G
H
performing an action with an active portion of the lumen-traveling device in response to the response initiation signal
wherein performing an action with the active portion includes at least partly removing specific components from at least a portion of a fluid within the body lumen. 2312
wherein performing an action with the active portion includes activating at least one catalyst. 2314
wherein performing an action with the active portion includes generating a localized electric field 2316
wherein performing an action with the active portion includes generating a localized magnetic field. 2318
wherein performing an action with the active portion includes scraping at least a portion of the body lumen. 2320
wherein performing an action with the active portion includes cutting at least a portion of the body lumen. 2322
wherein performing an action with the active portion includes releasing a man-made structure from the lumen-traveling device. 2324
wherein performing an action with the active portion includes attaching the man-made structure to a wall of the body lumen. 2326

FIG. 40E

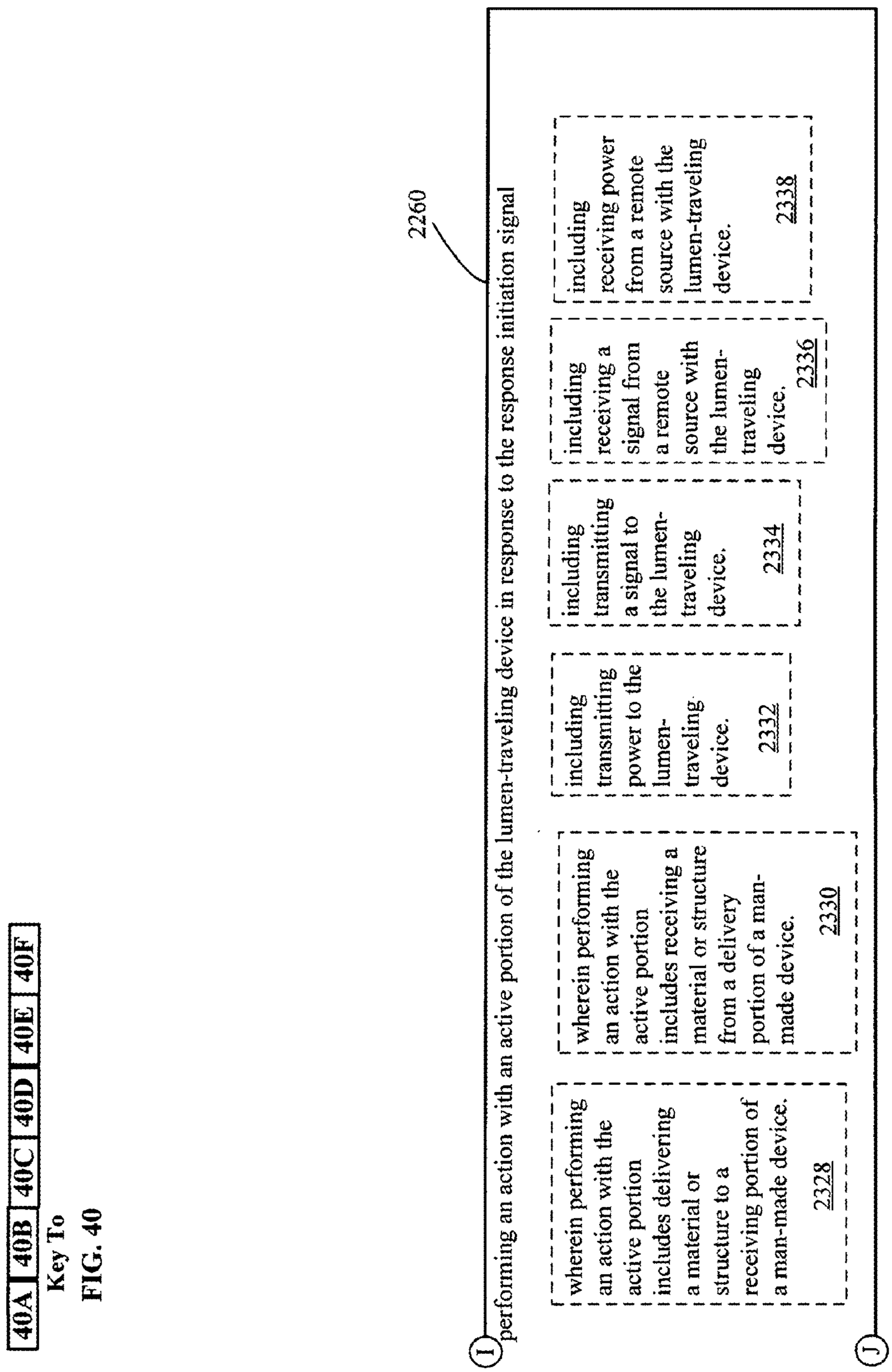
40A
40B
40C
40D
40E
40F
Key To
FIG. 40
2260
I
performing an action with an active portion of the lumen-traveling device in response to the response initiation signal
wherein performing an action with the active portion includes delivering a material or structure to a receiving portion of a man-made device.
2328
wherein performing an action with the active portion includes receiving a material or structure from a delivery portion of a man-made device.
2330
including transmitting power to the lumen-traveling device.
2332
including transmitting a signal to the lumen-traveling device.
2334
including receiving a signal from a remote source with the lumen-traveling device.
2336
including receiving power from a remote source with the lumen-traveling device.
2338
J

FIG. 40F

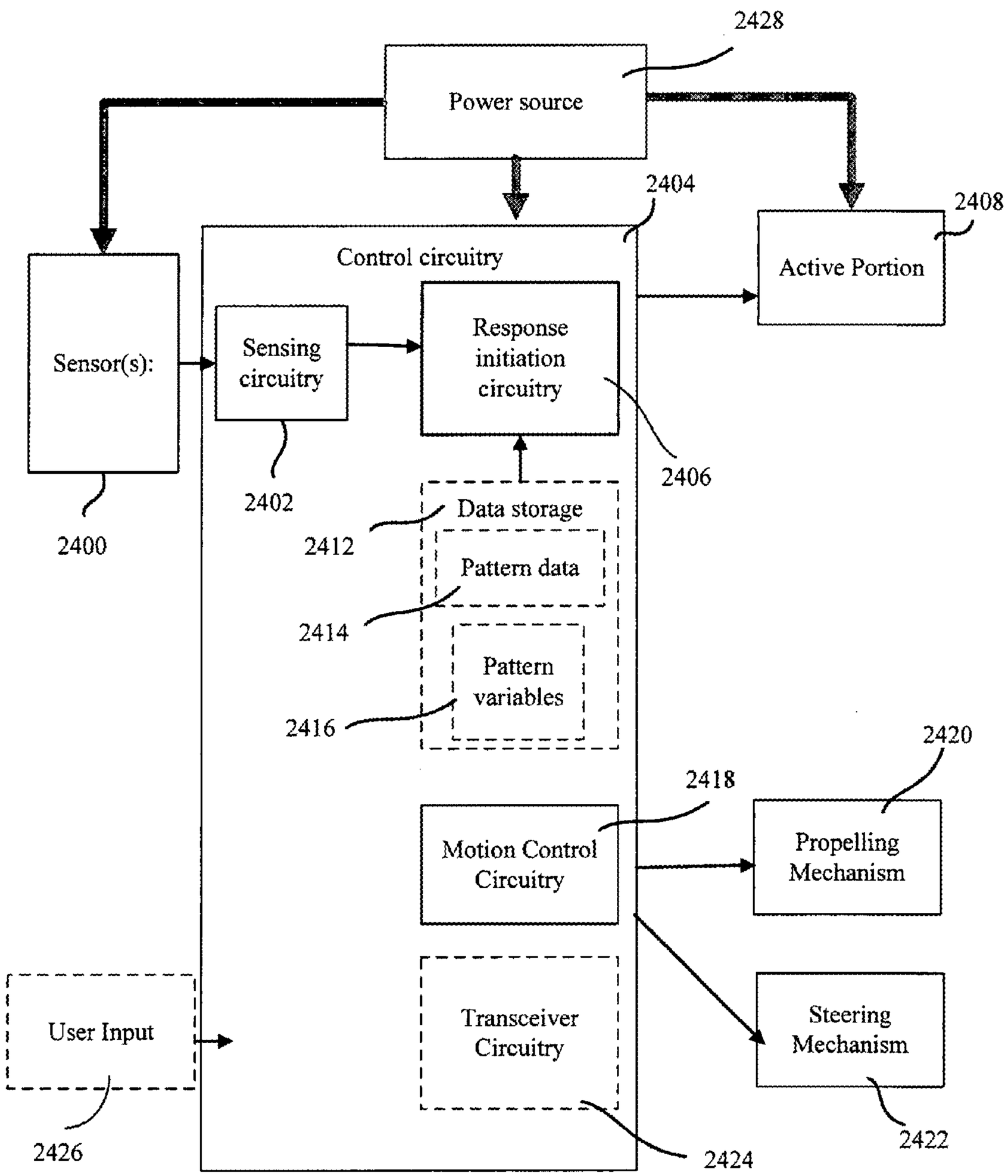
2428
Power source
2404
2408
Control circuitry
Active Portion
Sensor(s):
Sensing circuitry
Response initiation circuitry
2400
2402
2406
Data storage
2412
Pattern data
2414
Pattern variables
2416
2420
2418
Motion Control Circuitry
Propelling Mechanism
User Input
Transceiver Circuitry
Steering Mechanism
2426
2424
2422

FIG. 41

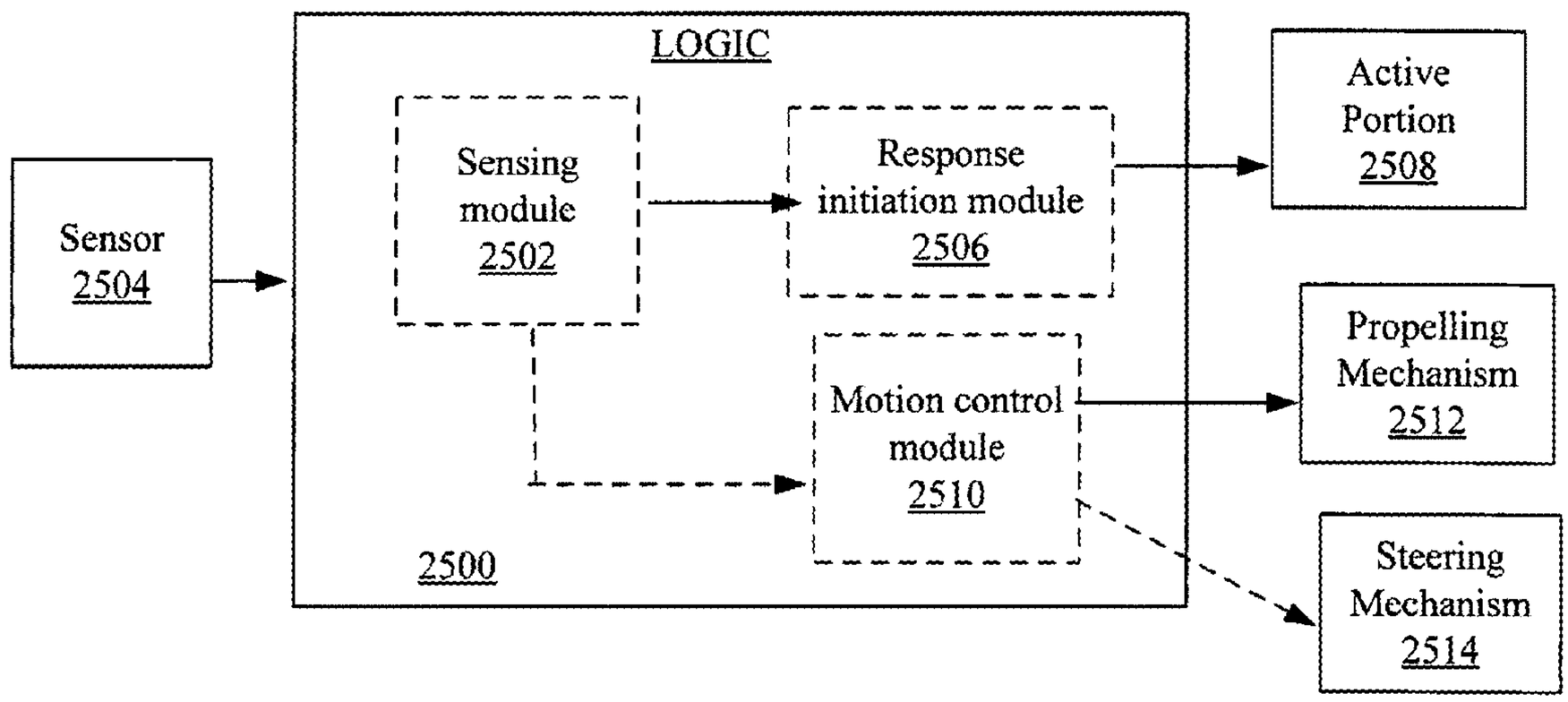
LOGIC
Sensor
2504
Sensing
module
2502
Response
initiation module
2506
Motion control
module
2510
2500
Active
Portion
2508
Propelling
Mechanism
2512
Steering
Mechanism
2514

FIG. 42

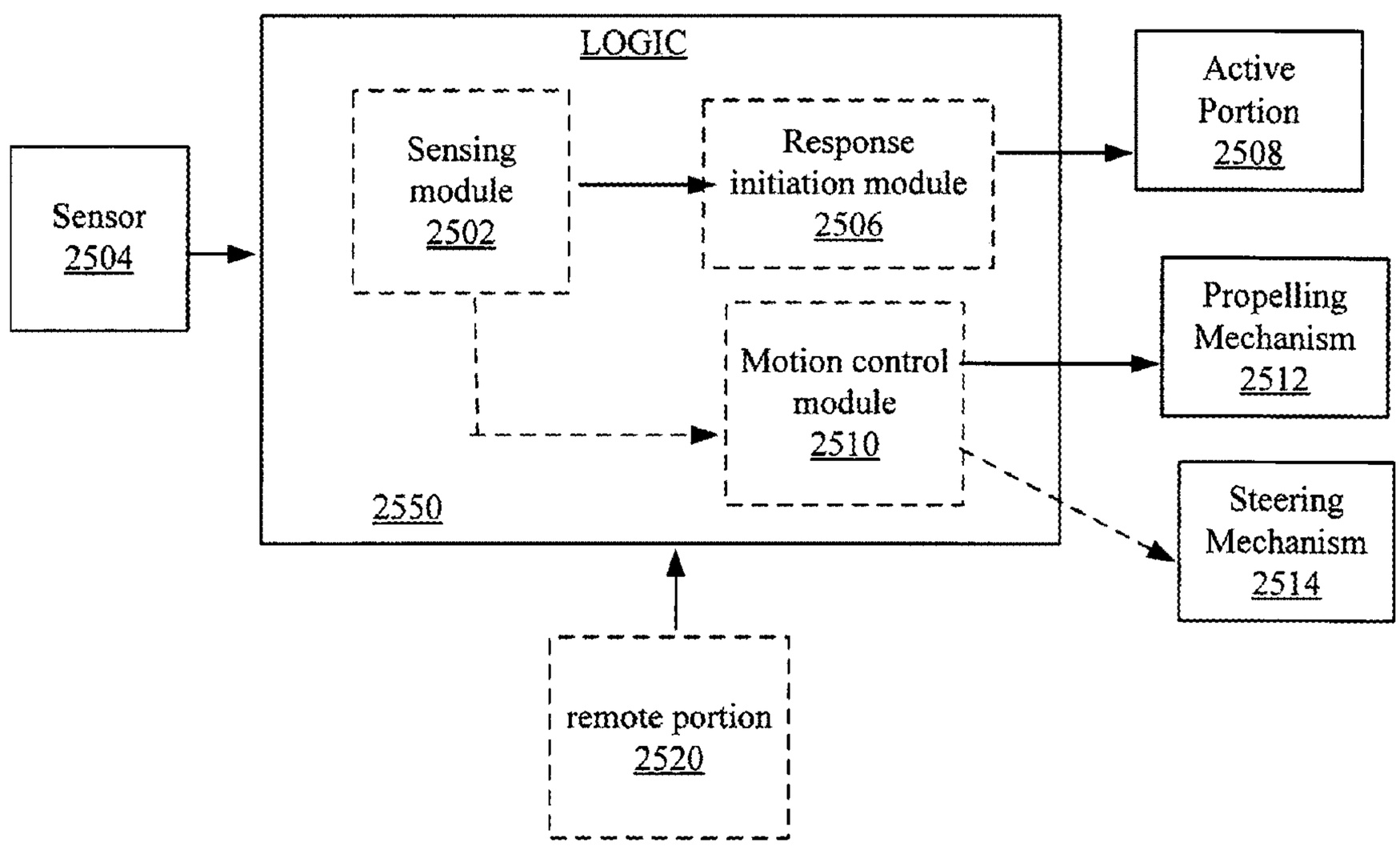
LOGIC
Sensor
2504
Sensing
module
2502
Response
initiation module
2506
Motion control
module
2510
2550
Active
Portion
2508
Propelling
Mechanism
2512
Steering
Mechanism
2514
remote portion
2520

FIG. 43

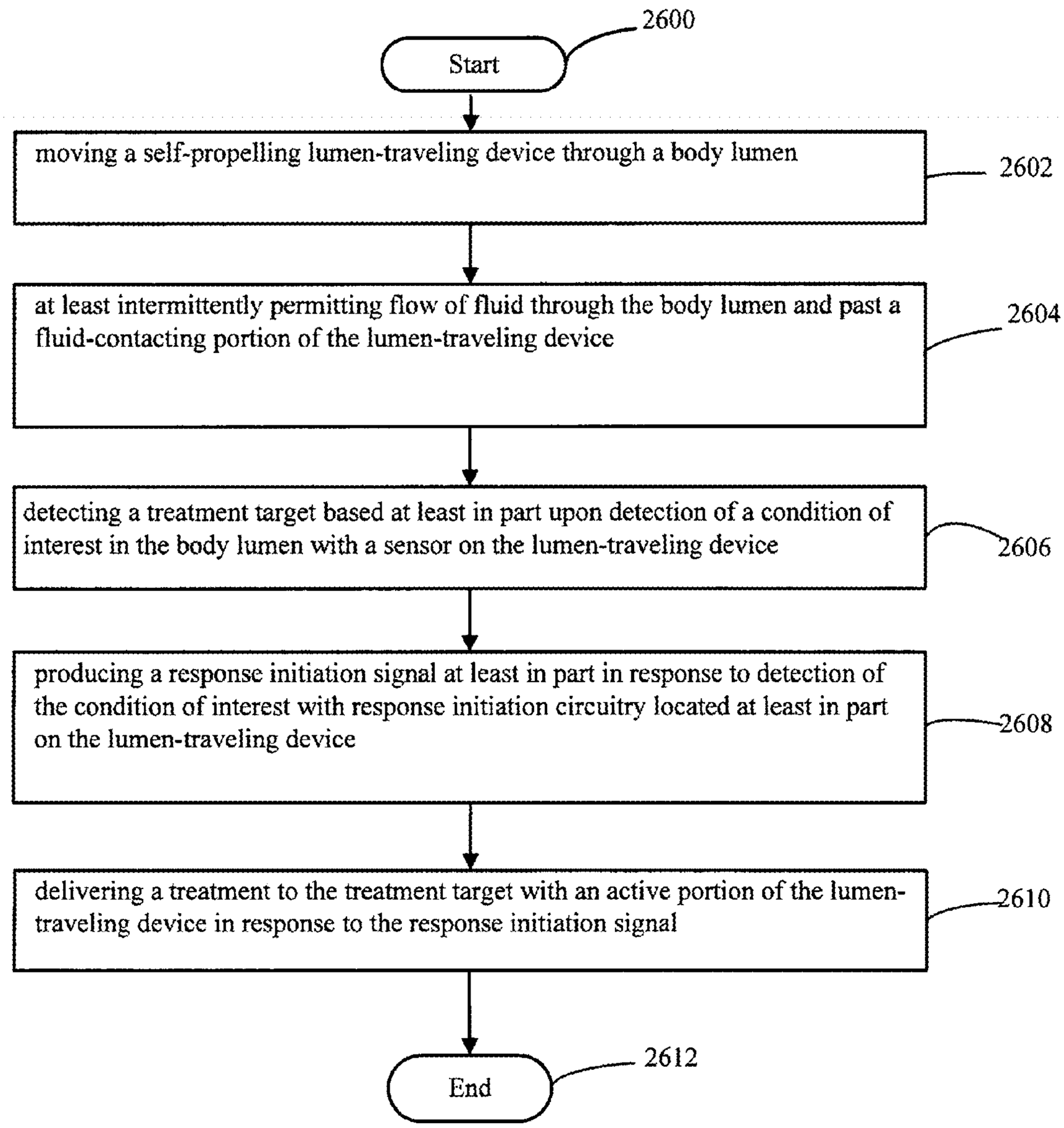
2600
Start
moving a self-propelling lumen-traveling device through a body lumen
2602
at least intermittently permitting flow of fluid through the body lumen and past a fluid-contacting portion of the lumen-traveling device
2604
detecting a treatment target based at least in part upon detection of a condition of interest in the body lumen with a sensor on the lumen-traveling device
2606
producing a response initiation signal at least in part in response to detection of the condition of interest with response initiation circuitry located at least in part on the lumen-traveling device
2608
delivering a treatment to the treatment target with an active portion of the lumen-traveling device in response to the response initiation signal
2610
End
2612

FIG. 44

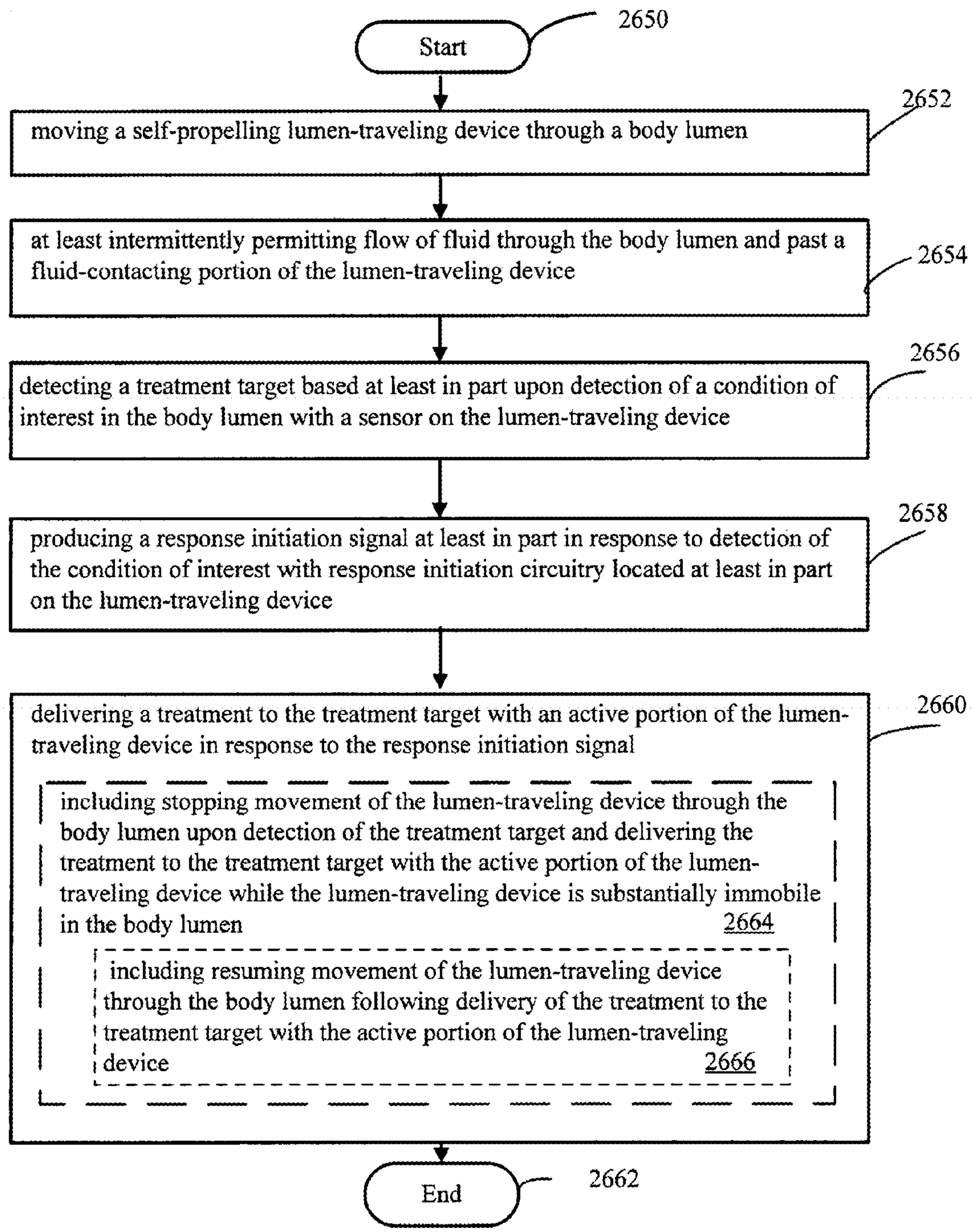
Start
2650
moving a self-propelling lumen-traveling device through a body lumen
2652
at least intermittently permitting flow of fluid through the body lumen and past a fluid-contacting portion of the lumen-traveling device
2654
detecting a treatment target based at least in part upon detection of a condition of interest in the body lumen with a sensor on the lumen-traveling device
2656
producing a response initiation signal at least in part in response to detection of the condition of interest with response initiation circuitry located at least in part on the lumen-traveling device
2658
delivering a treatment to the treatment target with an active portion of the lumen-traveling device in response to the response initiation signal
2660
including stopping movement of the lumen-traveling device through the body lumen upon detection of the treatment target and delivering the treatment to the treatment target with the active portion of the lumen-traveling device while the lumen-traveling device is substantially immobile in the body lumen
2664
including resuming movement of the lumen-traveling device through the body lumen following delivery of the treatment to the treatment target with the active portion of the lumen-traveling device
2666
End
2662

FIG. 45

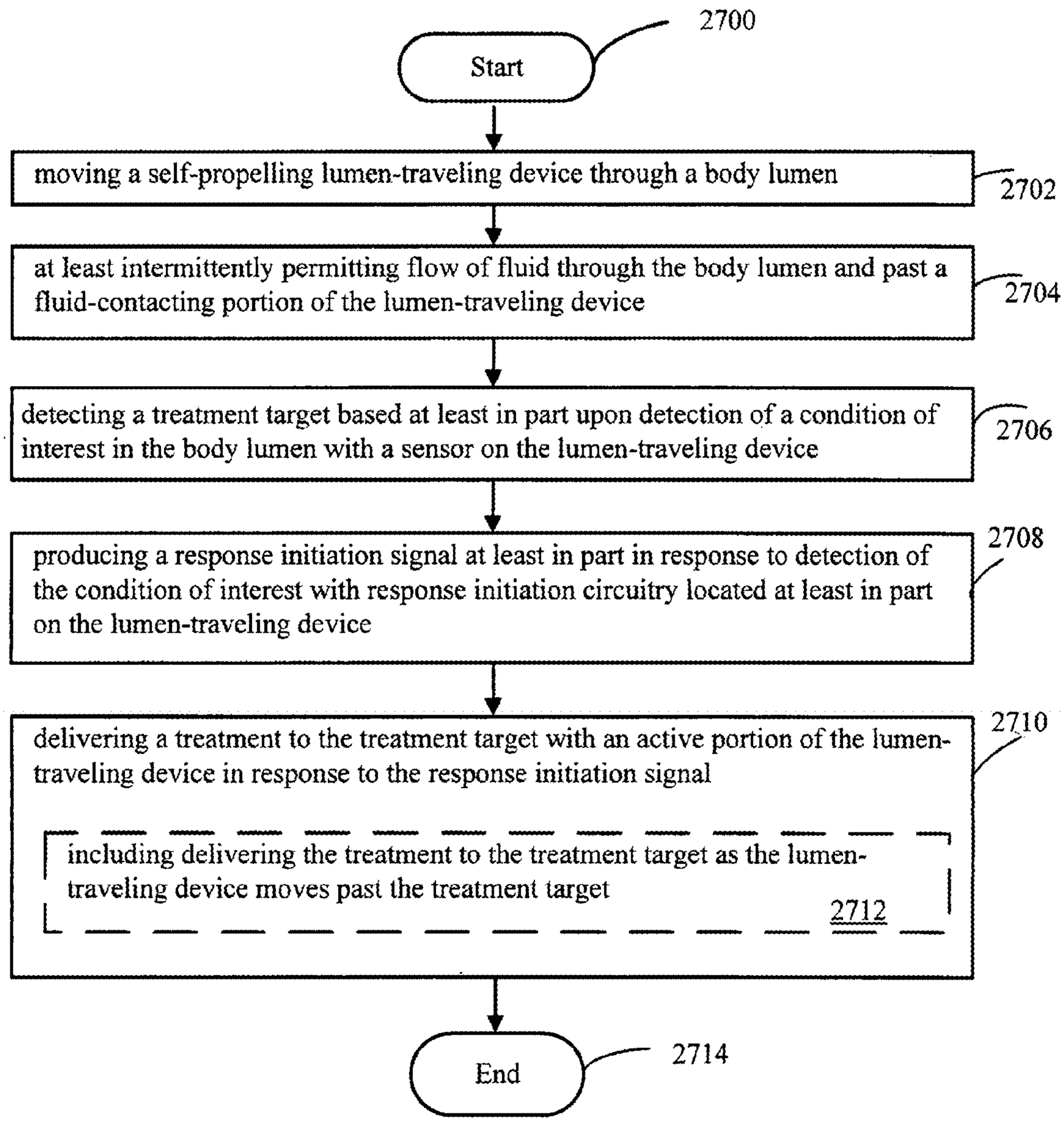
2700
Start
moving a self-propelling lumen-traveling device through a body lumen
2702
at least intermittently permitting flow of fluid through the body lumen and past a fluid-contacting portion of the lumen-traveling device
2704
detecting a treatment target based at least in part upon detection of a condition of interest in the body lumen with a sensor on the lumen-traveling device
2706
producing a response initiation signal at least in part in response to detection of the condition of interest with response initiation circuitry located at least in part on the lumen-traveling device
2708
delivering a treatment to the treatment target with an active portion of the lumen-traveling device in response to the response initiation signal
2710
including delivering the treatment to the treatment target as the lumen-traveling device moves past the treatment target
2712
End
2714

FIG. 46

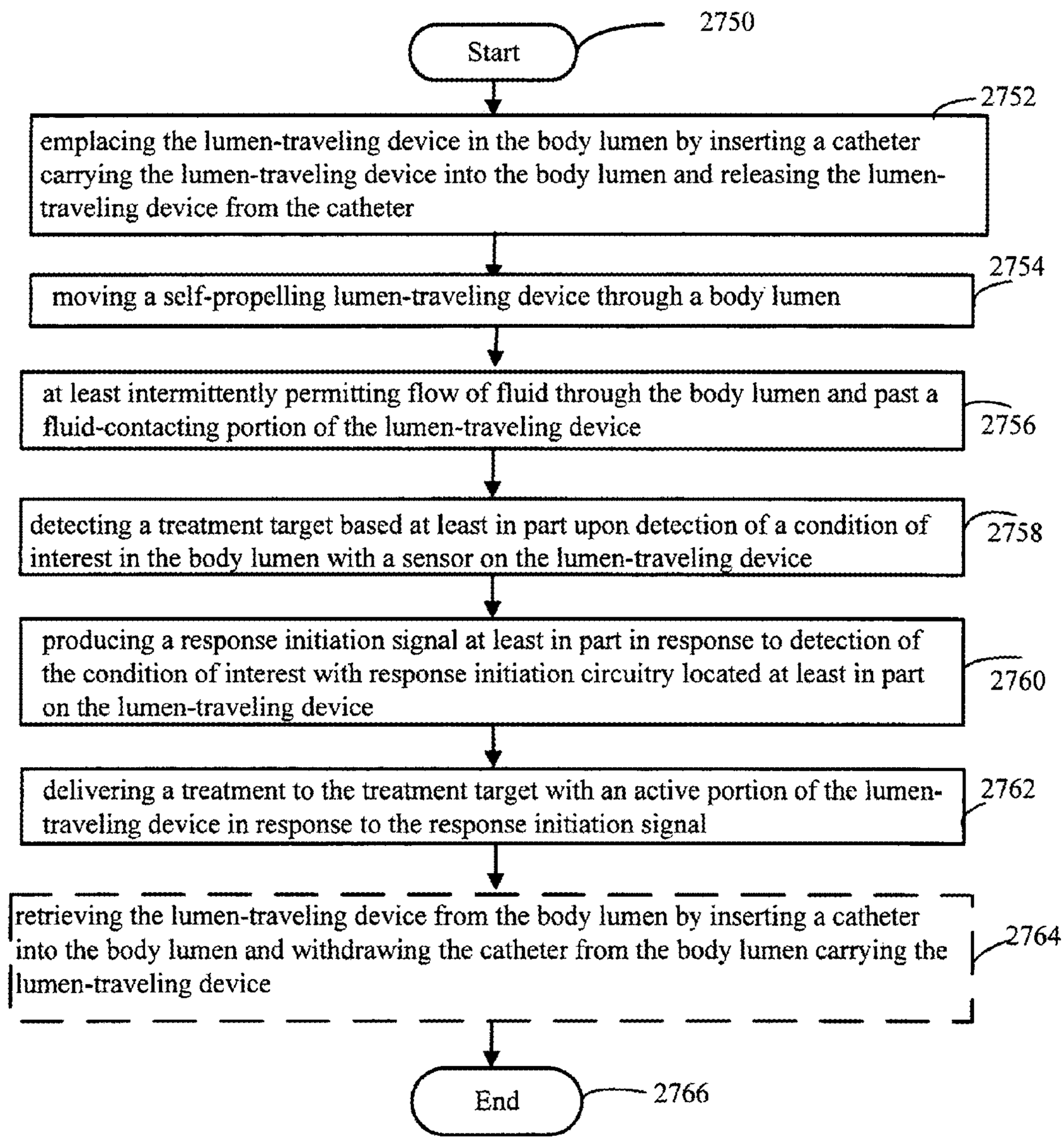
Start
2750
emplacing the lumen-traveling device in the body lumen by inserting a catheter carrying the lumen-traveling device into the body lumen and releasing the lumen-traveling device from the catheter
2752
moving a self-propelling lumen-traveling device through a body lumen
2754
at least intermittently permitting flow of fluid through the body lumen and past a fluid-contacting portion of the lumen-traveling device
2756
detecting a treatment target based at least in part upon detection of a condition of interest in the body lumen with a sensor on the lumen-traveling device
2758
producing a response initiation signal at least in part in response to detection of the condition of interest with response initiation circuitry located at least in part on the lumen-traveling device
2760
delivering a treatment to the treatment target with an active portion of the lumen-traveling device in response to the response initiation signal
2762
retrieving the lumen-traveling device from the body lumen by inserting a catheter into the body lumen and withdrawing the catheter from the body lumen carrying the lumen-traveling device
2764
End
2766

FIG. 47

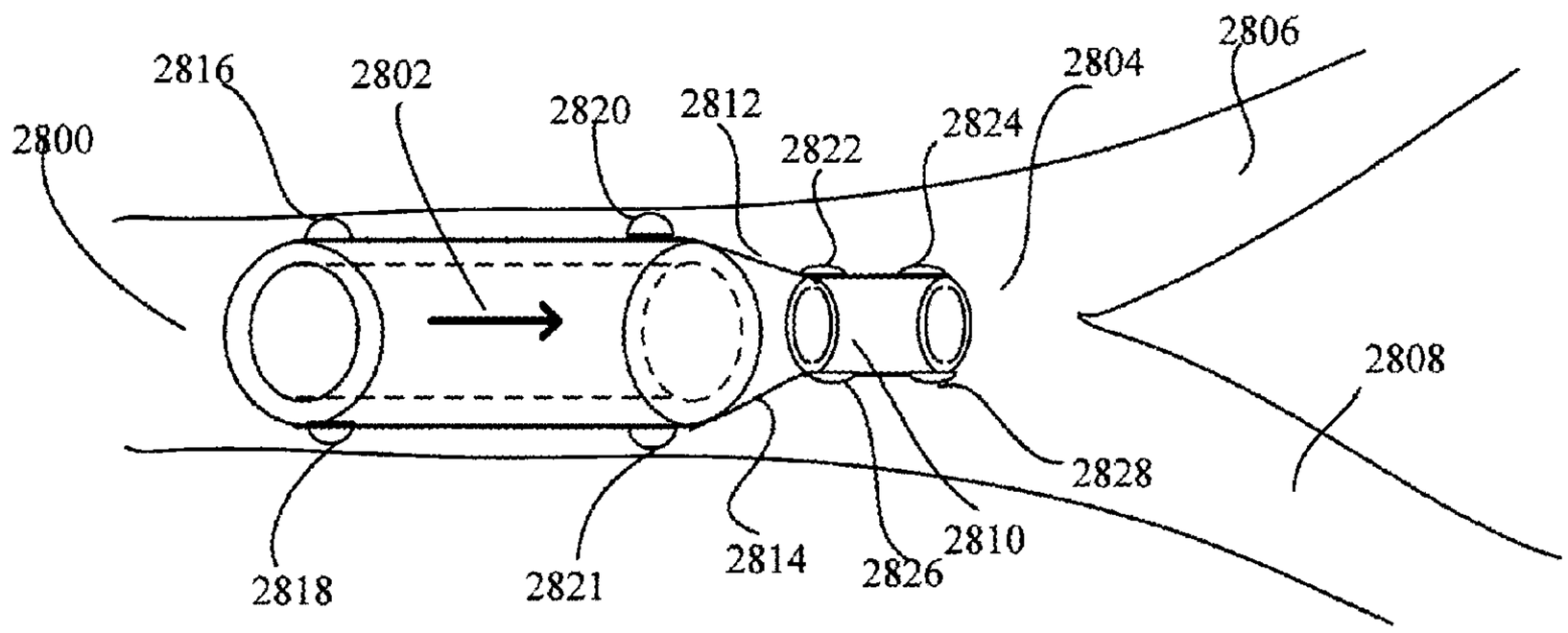

FIG. 48A

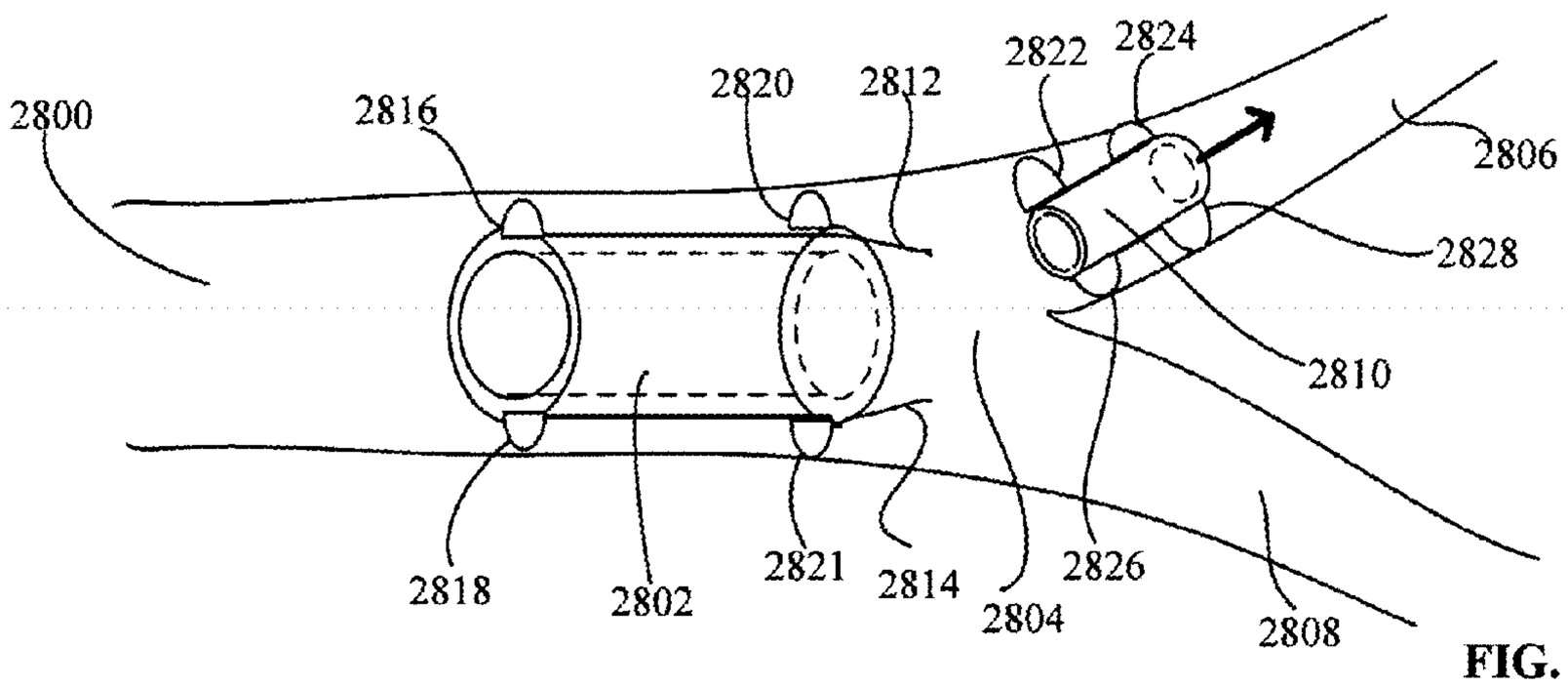

FIG. 48B

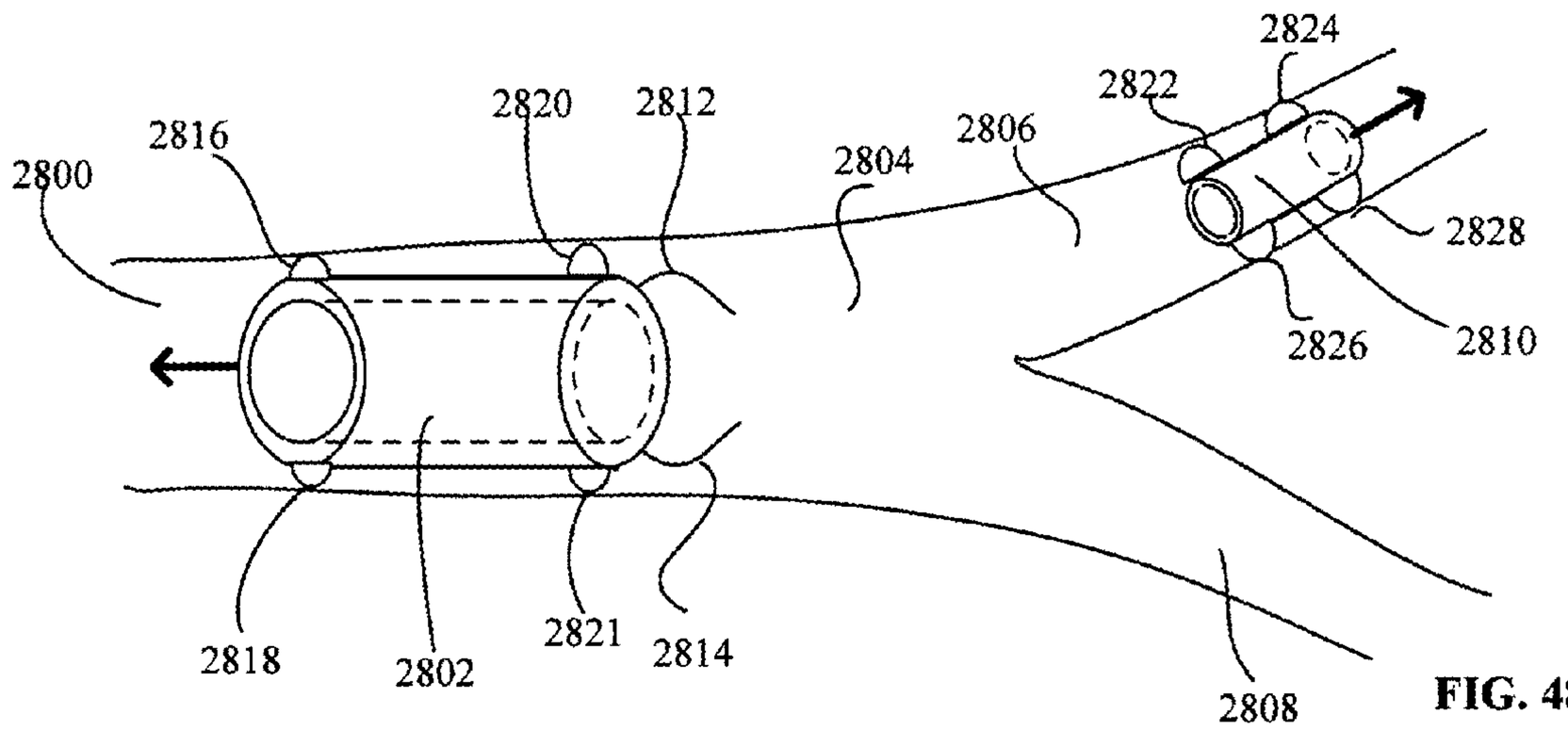

FIG. 48C

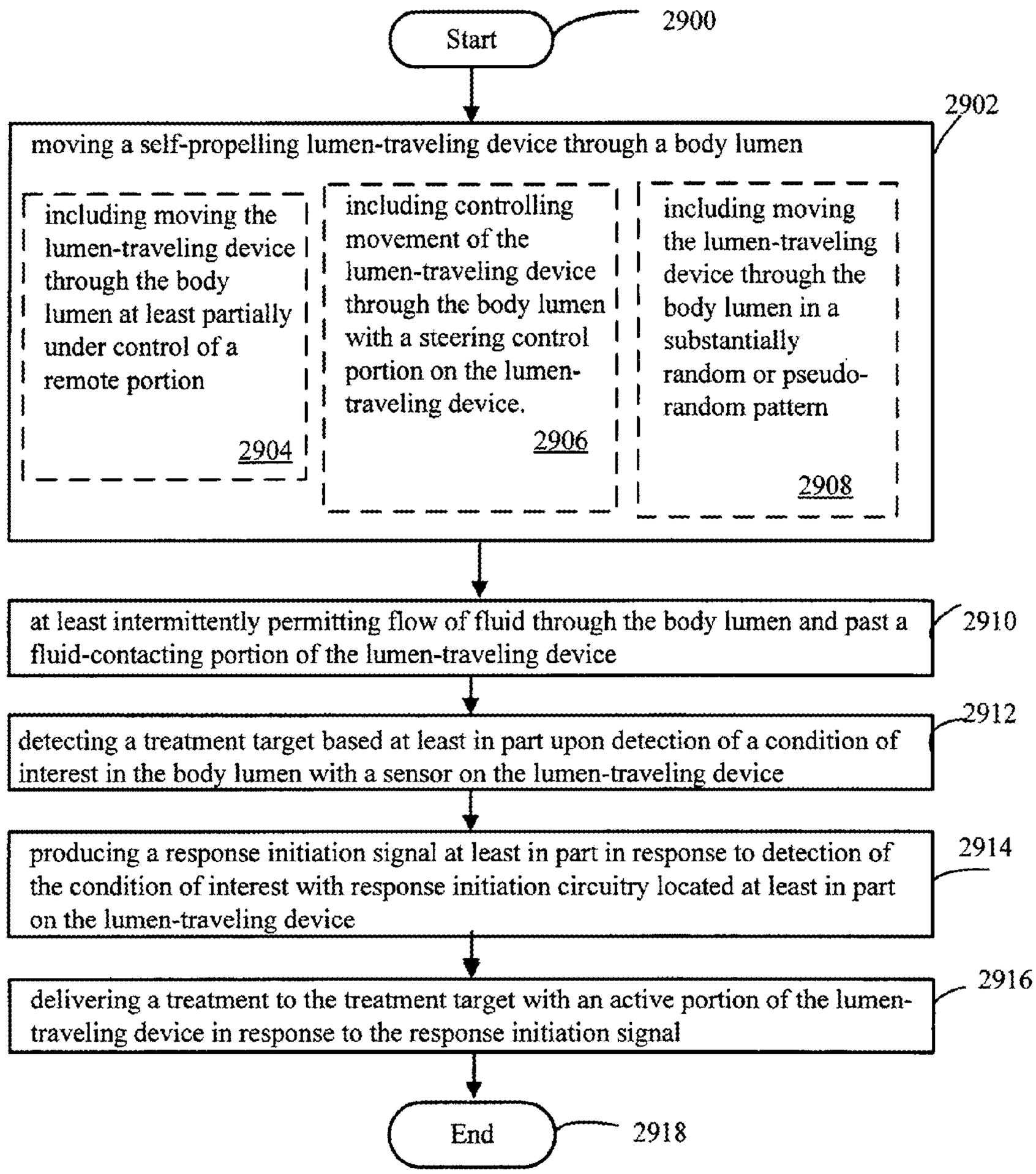
Start
2900
moving a self-propelling lumen-traveling device through a body lumen
2902
including moving the lumen-traveling device through the body lumen at least partially under control of a remote portion
2904
including controlling movement of the lumen-traveling device through the body lumen with a steering control portion on the lumen-traveling device.
2906
including moving the lumen-traveling device through the body lumen in a substantially random or pseudo-random pattern
2908
at least intermittently permitting flow of fluid through the body lumen and past a fluid-contacting portion of the lumen-traveling device
2910
detecting a treatment target based at least in part upon detection of a condition of interest in the body lumen with a sensor on the lumen-traveling device
2912
producing a response initiation signal at least in part in response to detection of the condition of interest with response initiation circuitry located at least in part on the lumen-traveling device
2914
delivering a treatment to the treatment target with an active portion of the lumen-traveling device in response to the response initiation signal
2916
End
2918

FIG. 49

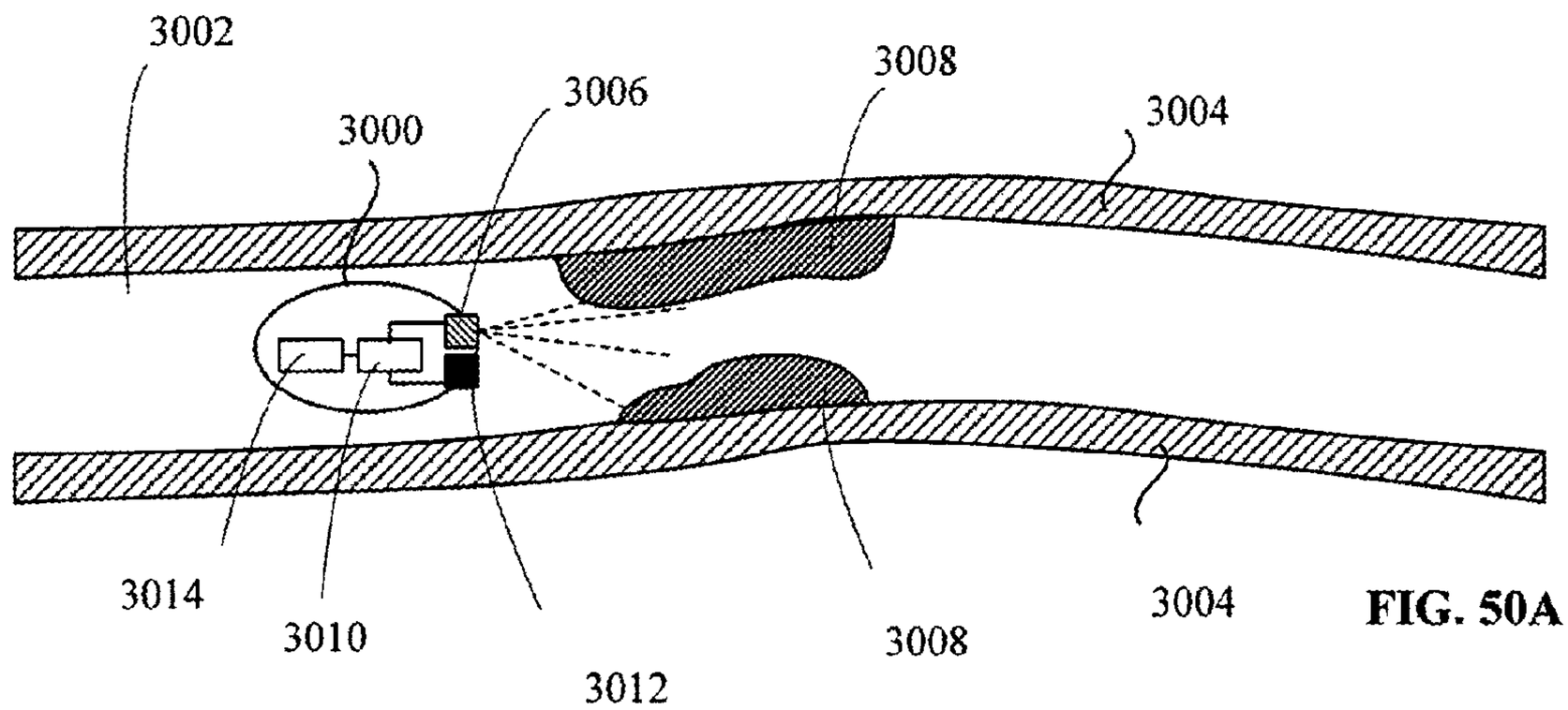

FIG. 50A

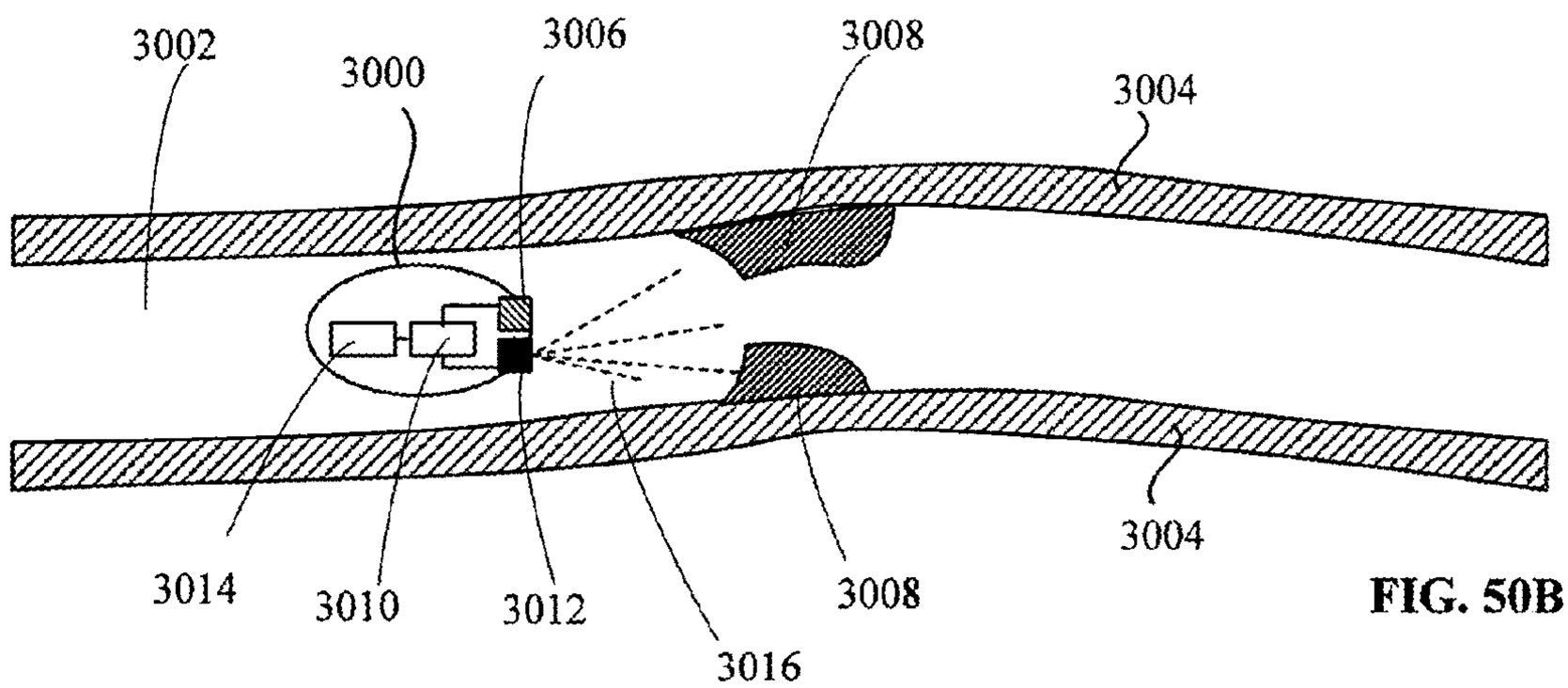

FIG. 50B

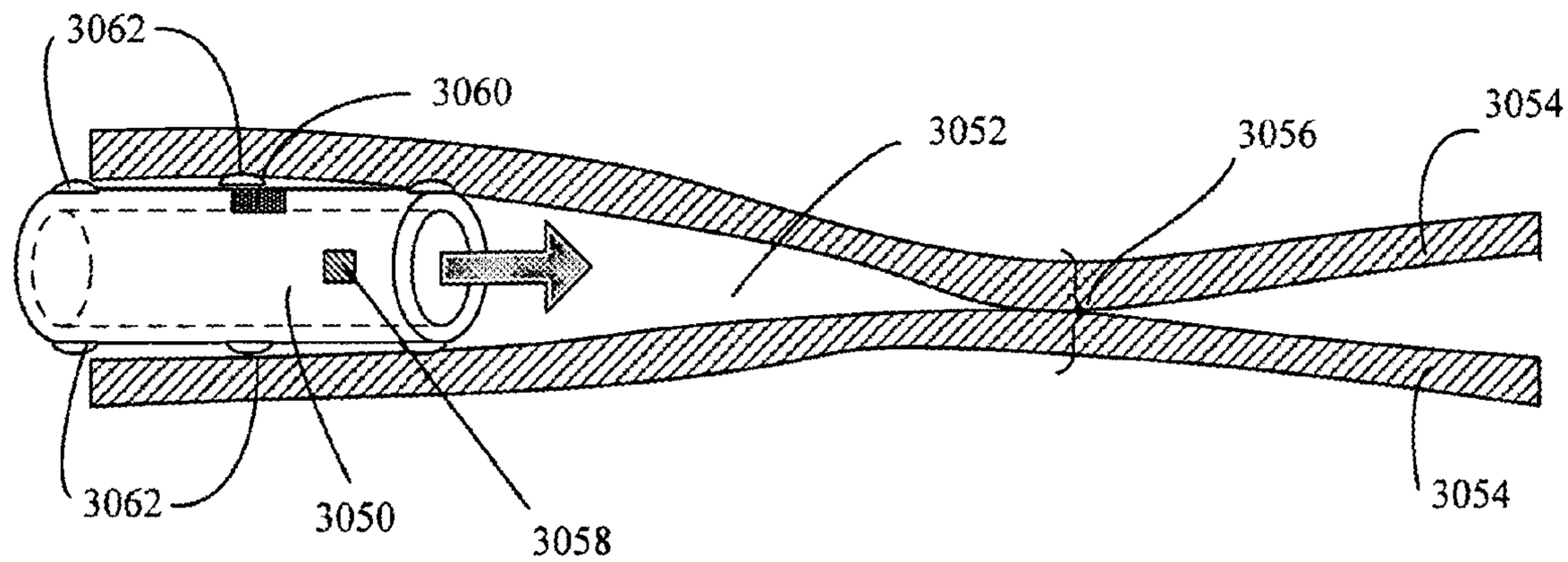

FIG. 51A

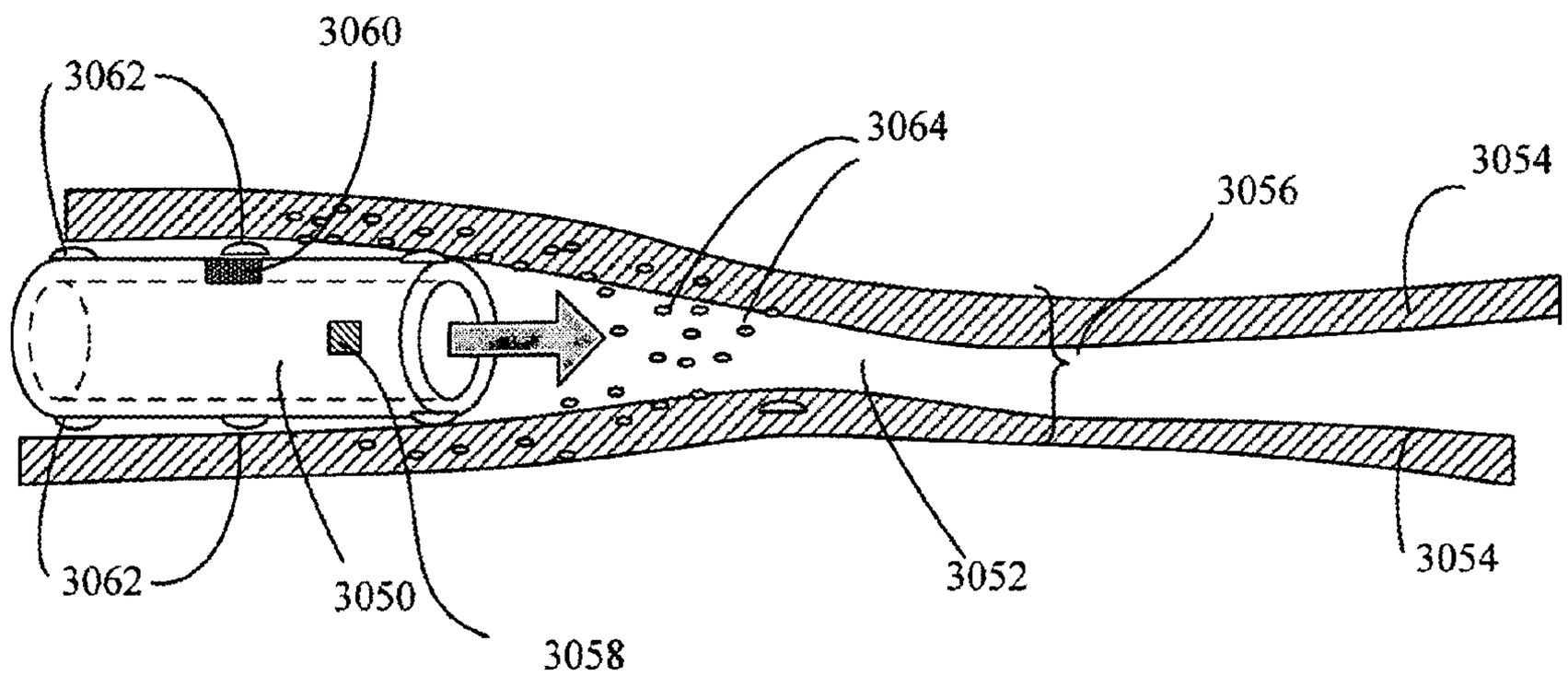

FIG. 51B

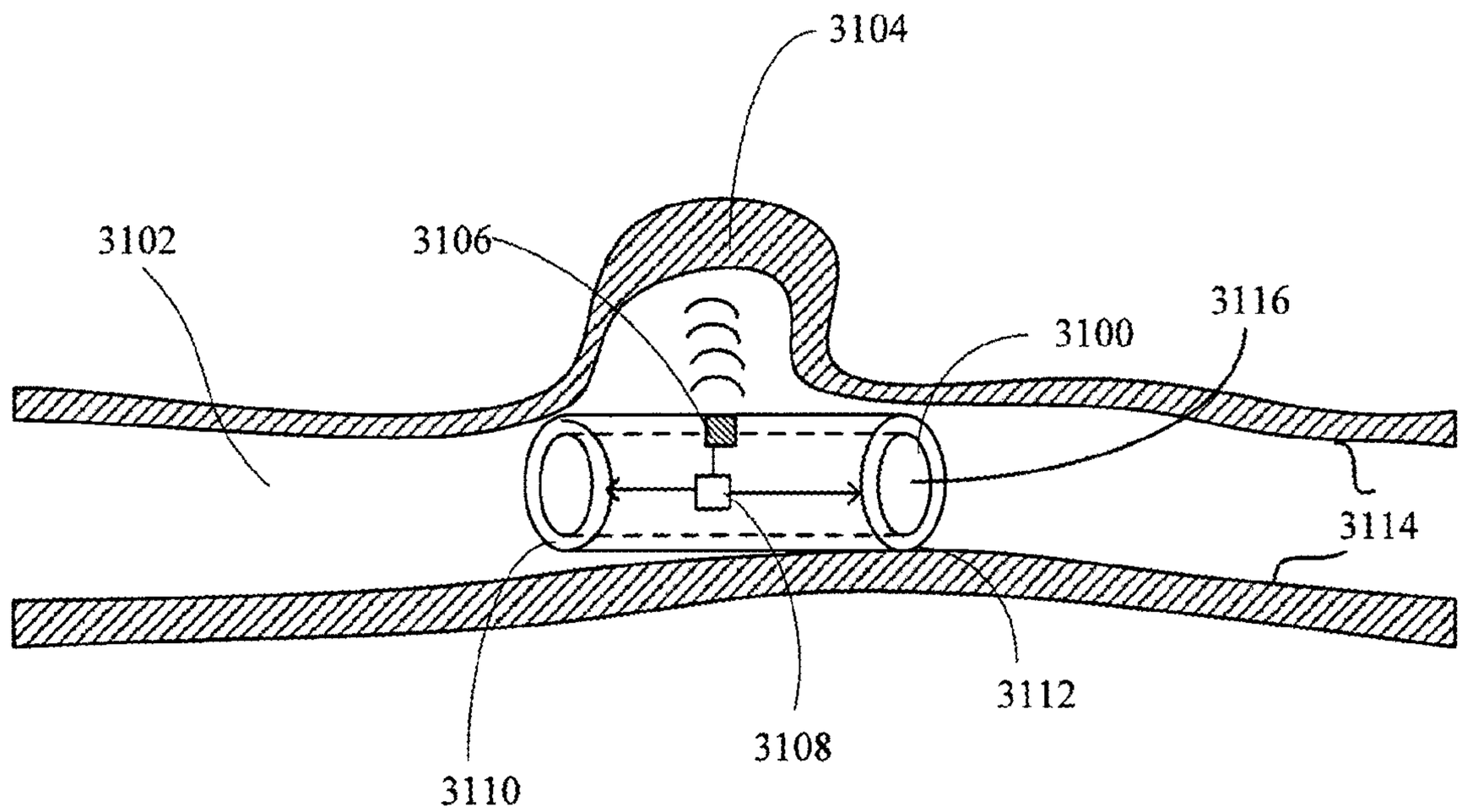

FIG. 52B

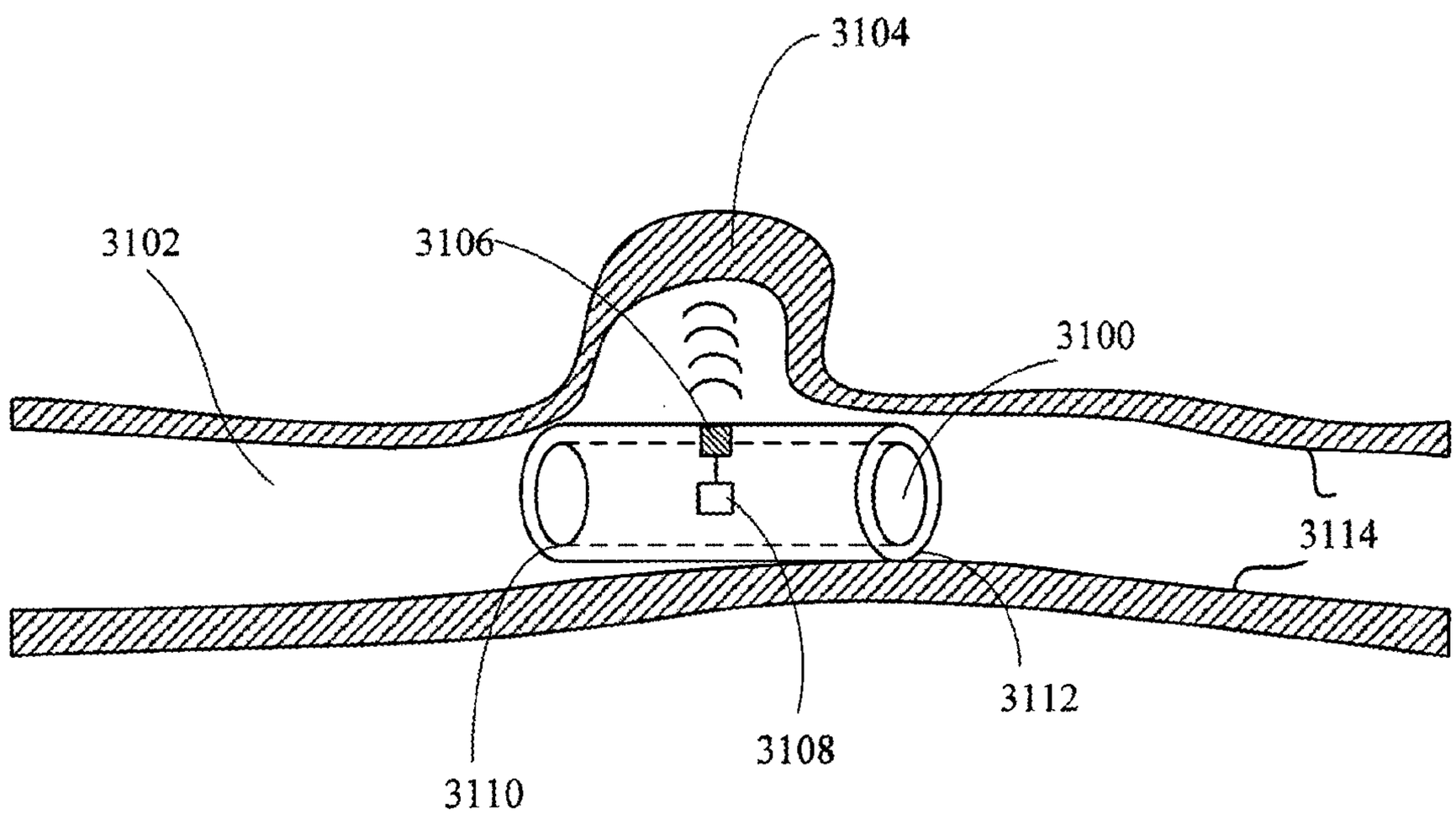

FIG. 52A

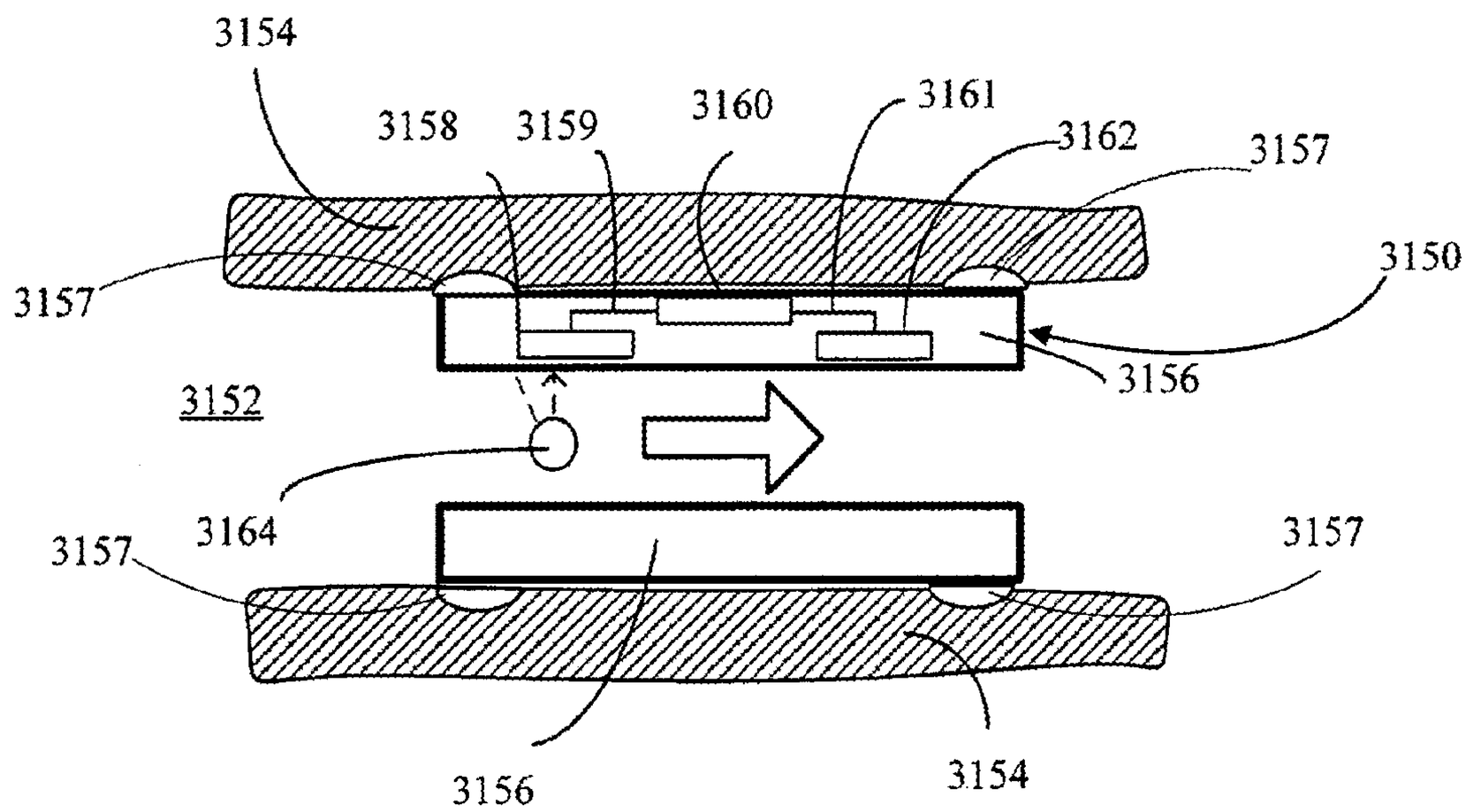

FIG. 53A

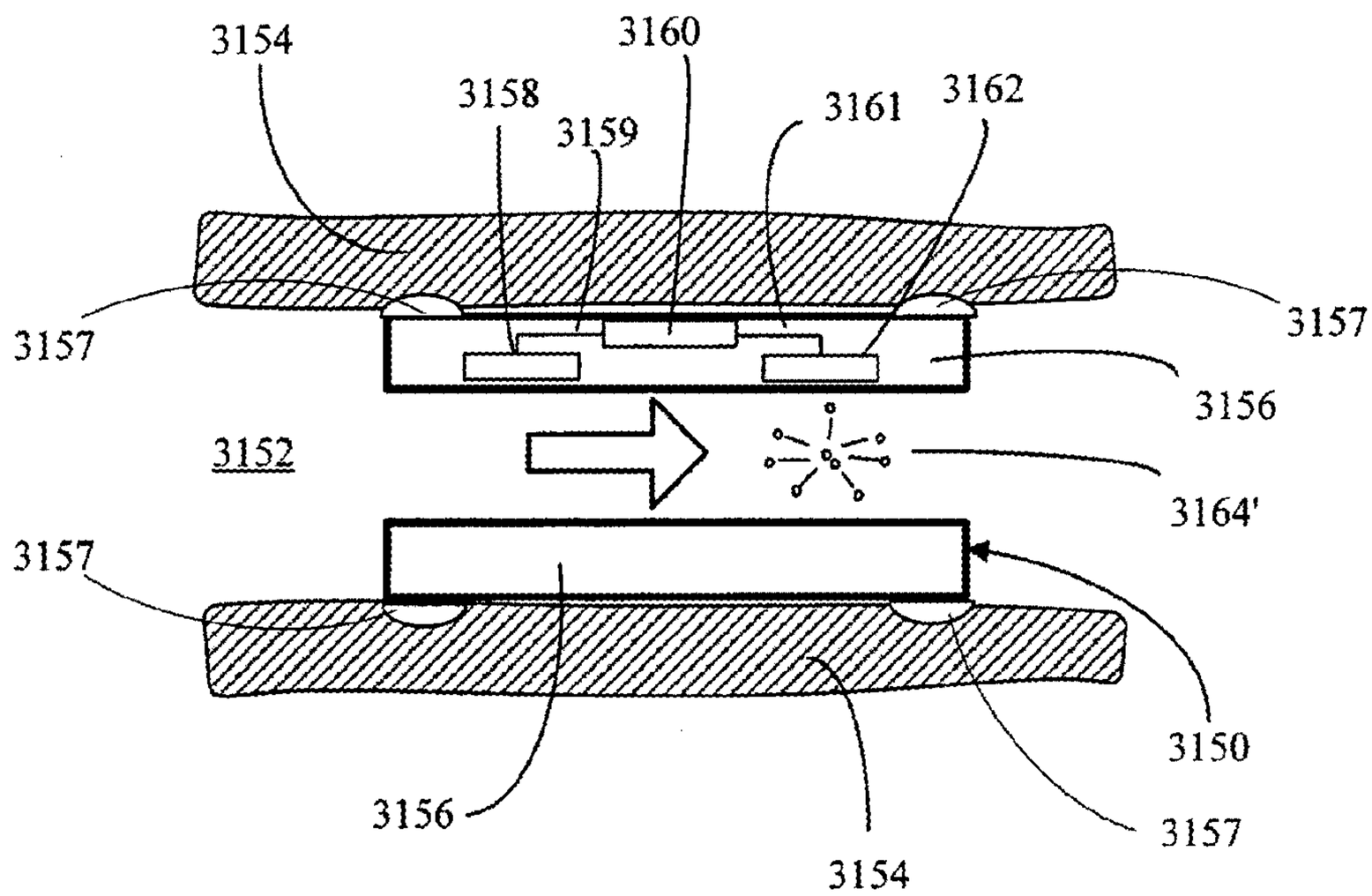

FIG. 53B

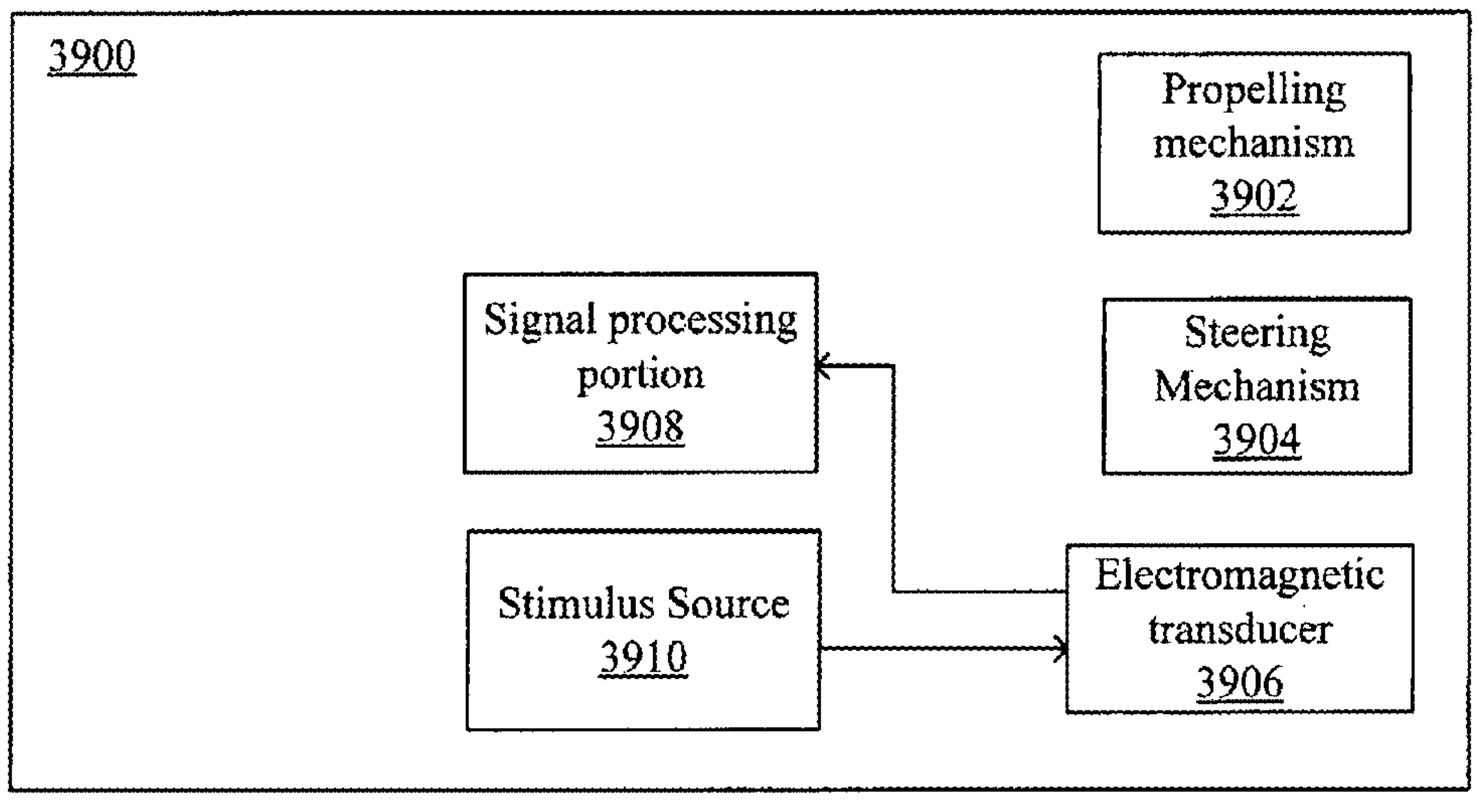
3900
Propelling mechanism 3902
Signal processing portion 3908
Steering Mechanism 3904
Stimulus Source 3910
Electromagnetic transducer 3906

FIG. 54

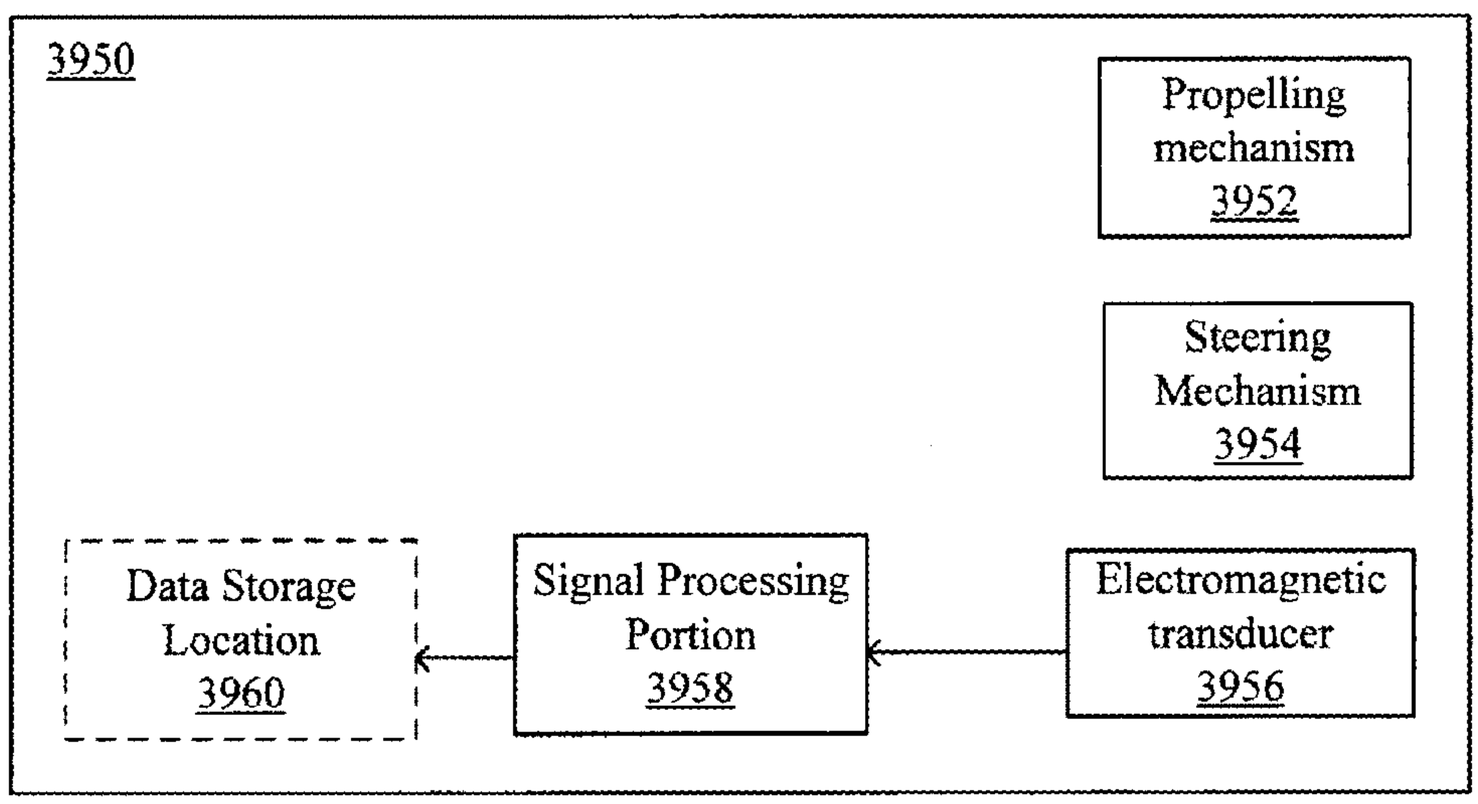
3950
Propelling mechanism 3952
Steering Mechanism 3954
Data Storage Location 3960
Signal Processing Portion 3958
Electromagnetic transducer 3956

FIG. 55

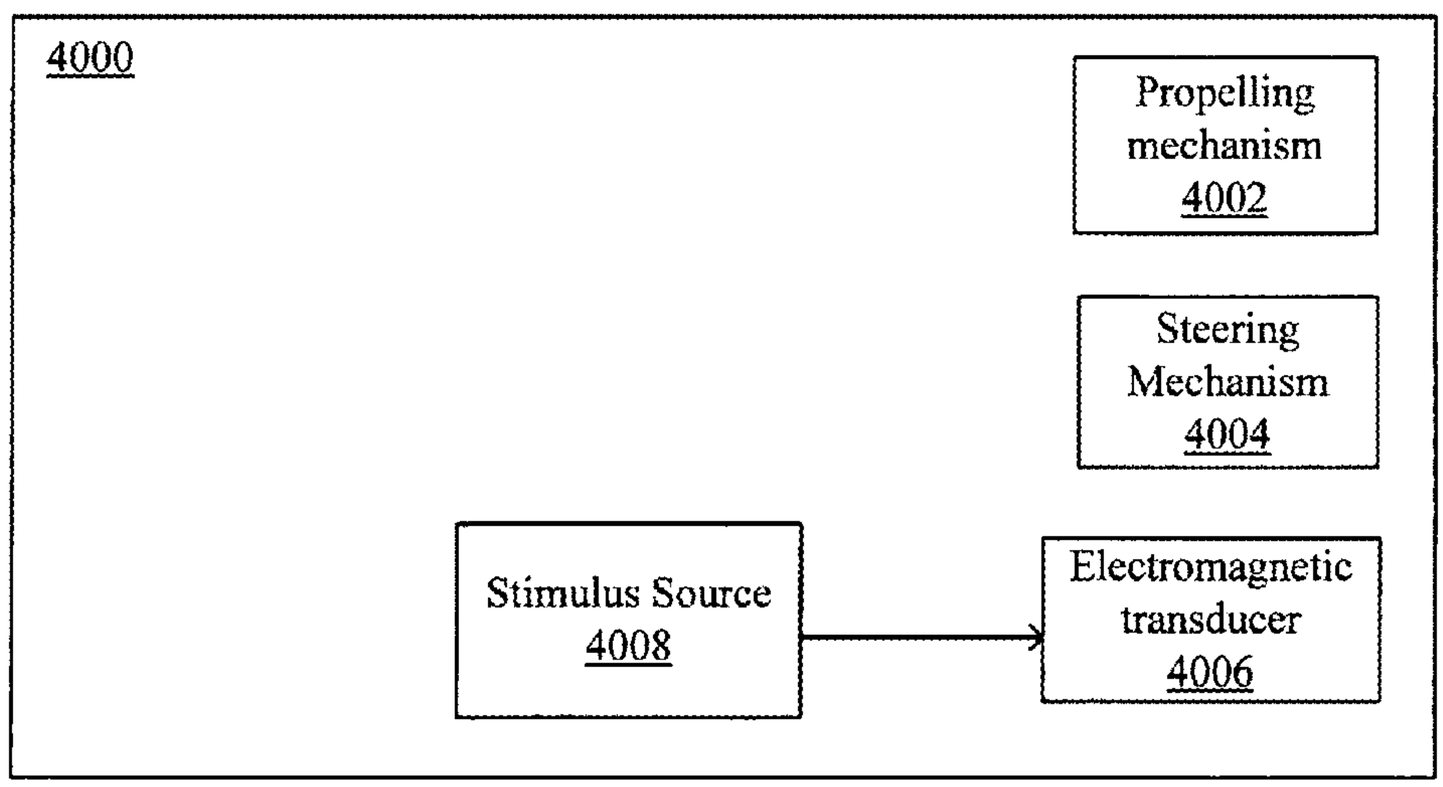
4000
Propelling mechanism 4002
Steering Mechanism 4004
Stimulus Source 4008
Electromagnetic transducer 4006

FIG. 56

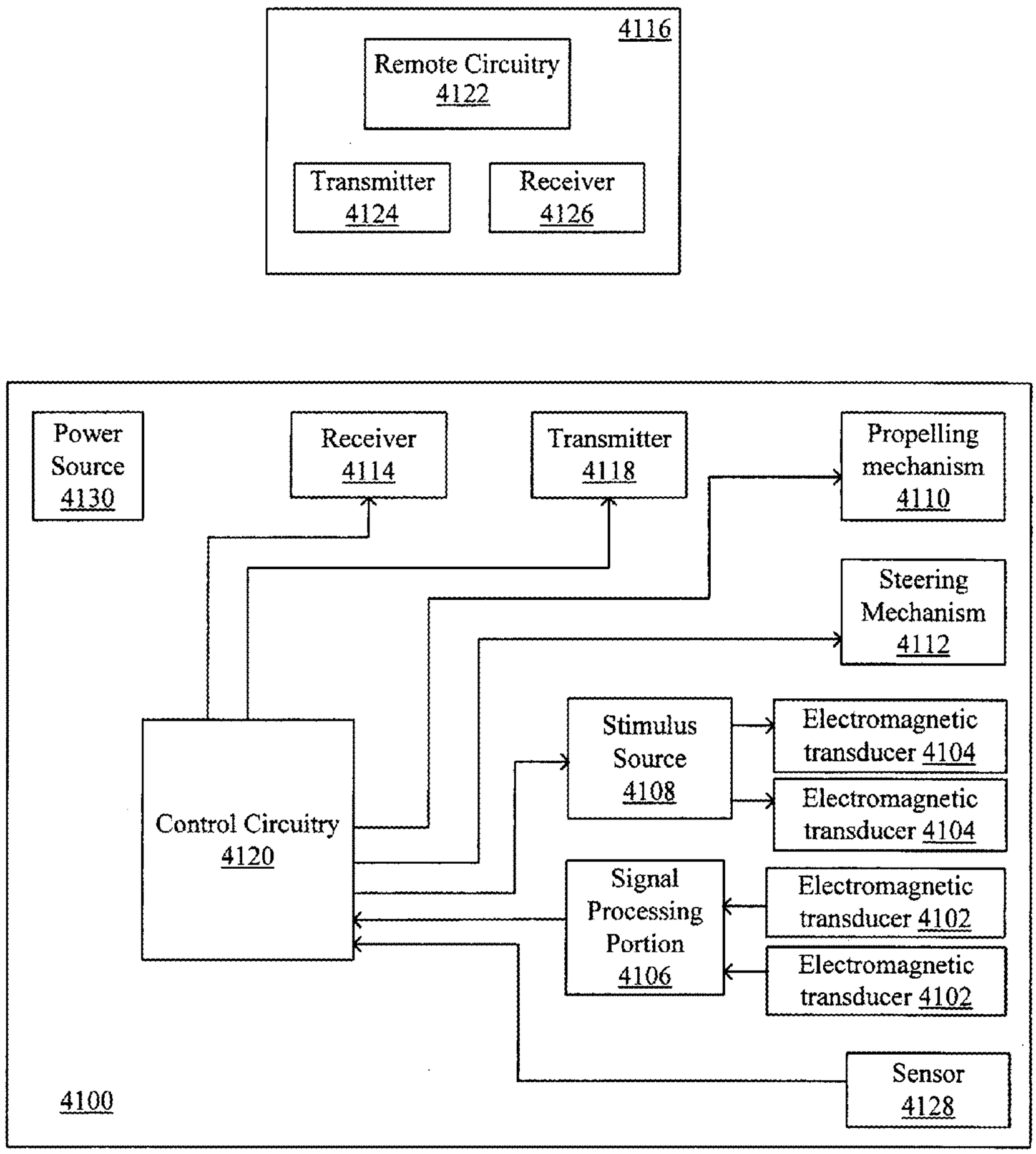
4116
Remote Circuitry 4122
Transmitter 4124
Receiver 4126
Power Source 4130
Receiver 4114
Transmitter 4118
Propelling mechanism 4110
Steering Mechanism 4112
Control Circuitry 4120
Stimulus Source 4108
Electromagnetic transducer 4104
Electromagnetic transducer 4104
Signal Processing Portion 4106
Electromagnetic transducer 4102
Electromagnetic transducer 4102
Sensor 4128
4100

FIG. 57

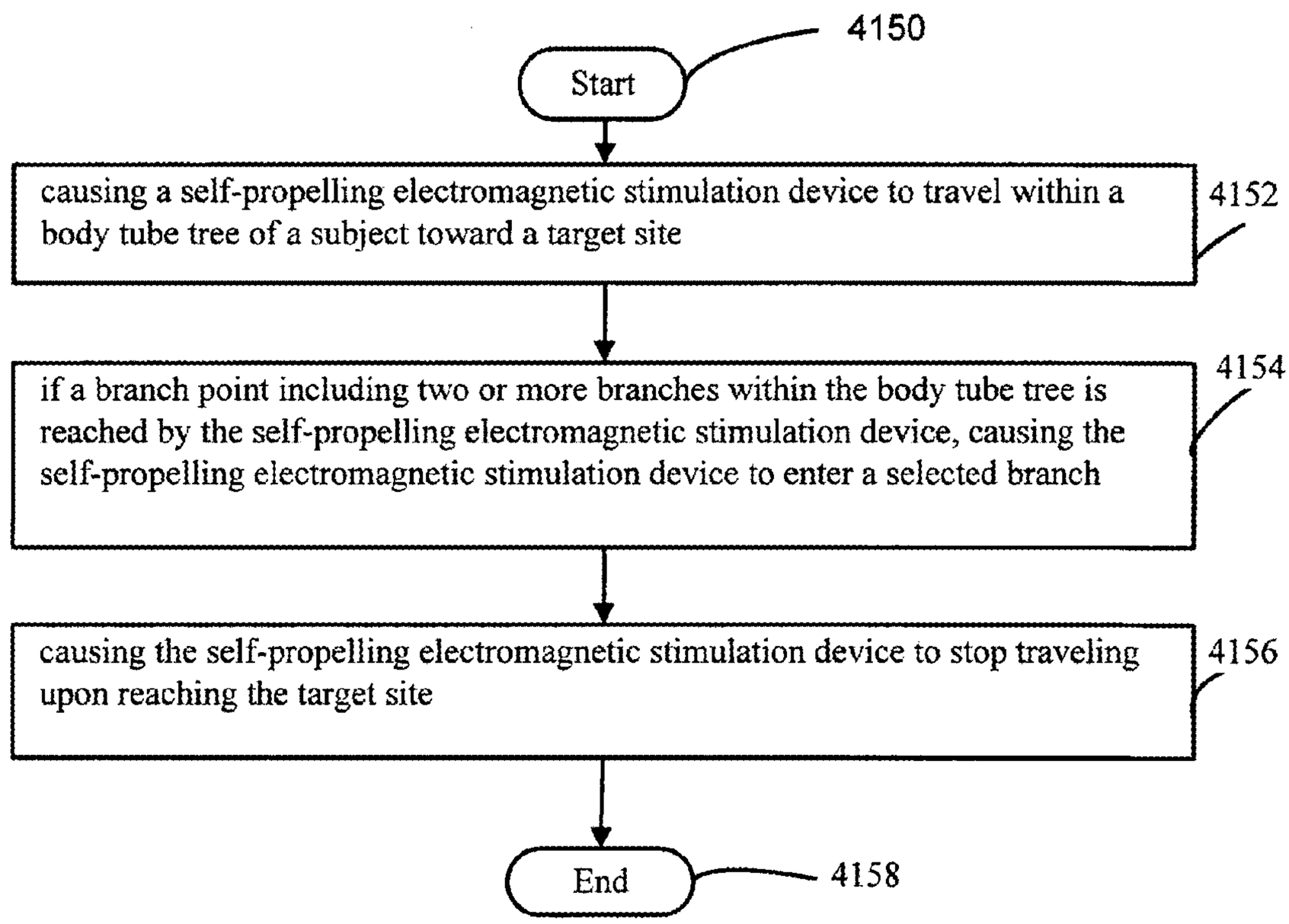
4150
Start
causing a self-propelling electromagnetic stimulation device to travel within a body tube tree of a subject toward a target site
4152
if a branch point including two or more branches within the body tube tree is reached by the self-propelling electromagnetic stimulation device, causing the self-propelling electromagnetic stimulation device to enter a selected branch
4154
causing the self-propelling electromagnetic stimulation device to stop traveling upon reaching the target site
4156
End
4158

FIG. 58

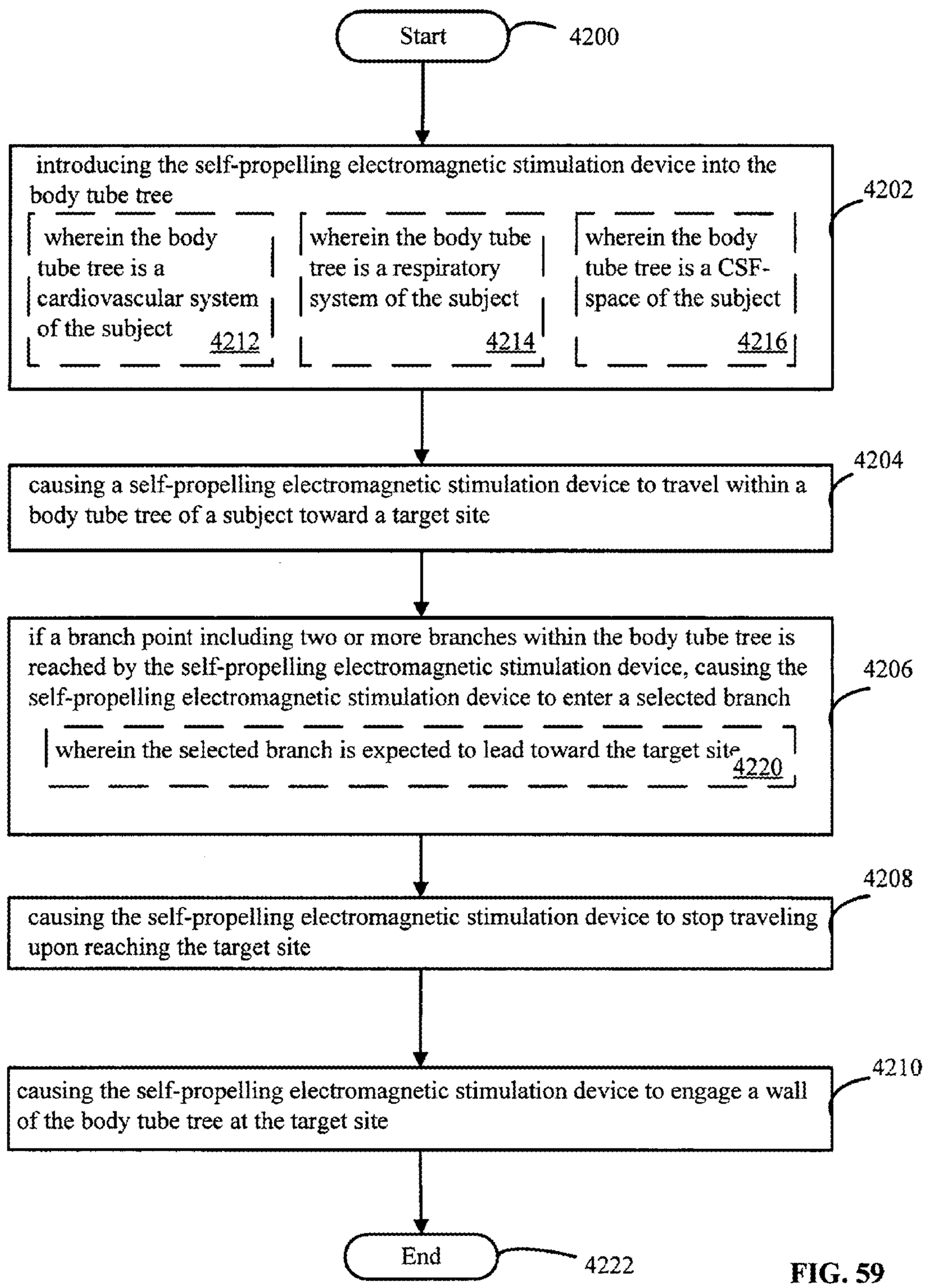
Start
4200
introducing the self-propelling electromagnetic stimulation device into the body tube tree
4202
wherein the body tube tree is a cardiovascular system of the subject
4212
wherein the body tube tree is a respiratory system of the subject
4214
wherein the body tube tree is a CSF-space of the subject
4216
causing a self-propelling electromagnetic stimulation device to travel within a body tube tree of a subject toward a target site
4204
if a branch point including two or more branches within the body tube tree is reached by the self-propelling electromagnetic stimulation device, causing the self-propelling electromagnetic stimulation device to enter a selected branch
4206
wherein the selected branch is expected to lead toward the target site
4220
causing the self-propelling electromagnetic stimulation device to stop traveling upon reaching the target site
4208
causing the self-propelling electromagnetic stimulation device to engage a wall of the body tube tree at the target site
4210
End
4222

FIG. 59

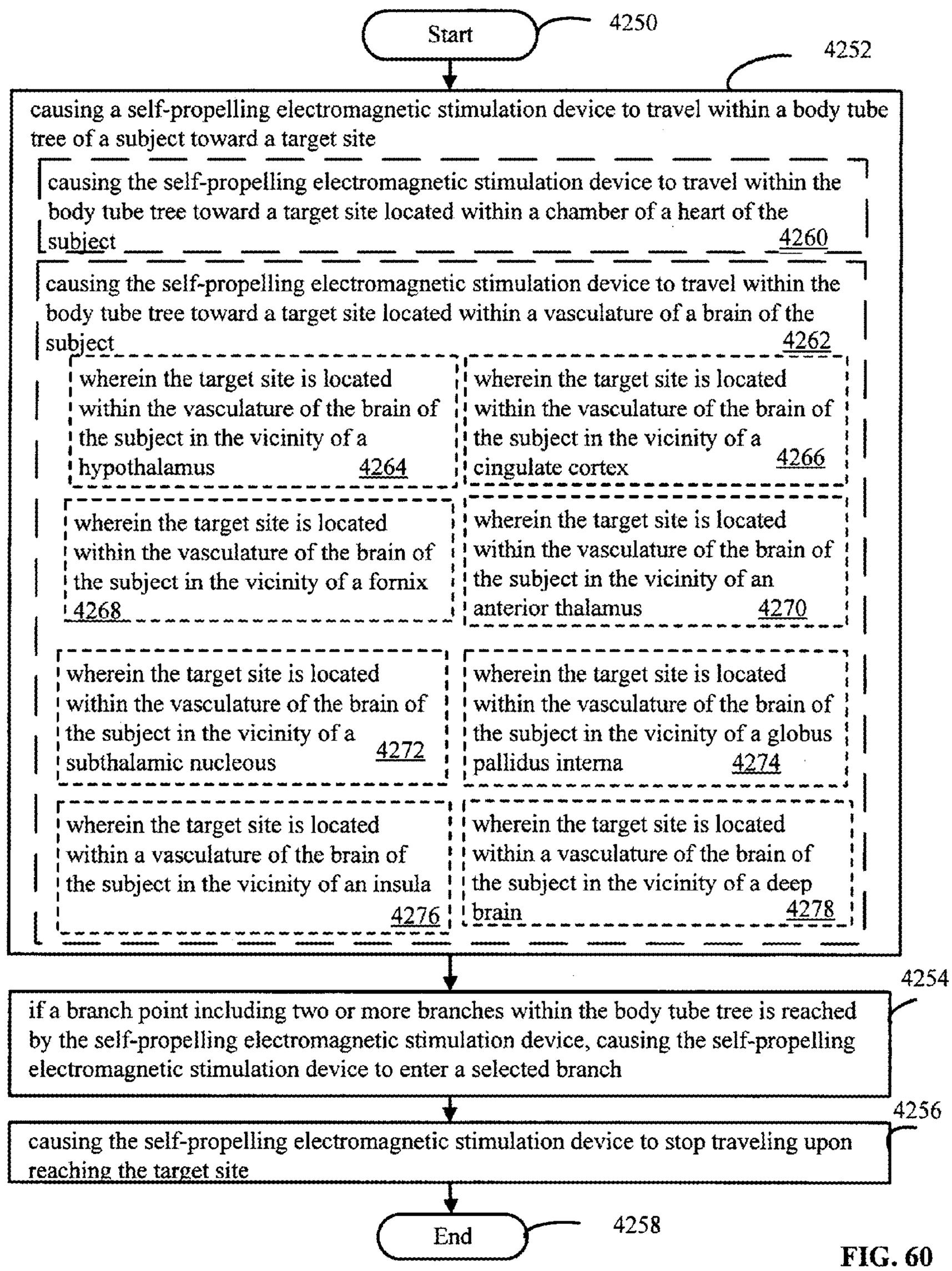
Start
4250
4252
causing a self-propelling electromagnetic stimulation device to travel within a body tube tree of a subject toward a target site
causing the self-propelling electromagnetic stimulation device to travel within the body tube tree toward a target site located within a chamber of a heart of the subject
4260
causing the self-propelling electromagnetic stimulation device to travel within the body tube tree toward a target site located within a vasculature of a brain of the subject
4262
wherein the target site is located within the vasculature of the brain of the subject in the vicinity of a hypothalamus
4264
wherein the target site is located within the vasculature of the brain of the subject in the vicinity of a cingulate cortex
4266
wherein the target site is located within the vasculature of the brain of the subject in the vicinity of a fornix
4268
wherein the target site is located within the vasculature of the brain of the subject in the vicinity of an anterior thalamus
4270
wherein the target site is located within the vasculature of the brain of the subject in the vicinity of a subthalamic nucleous
4272
wherein the target site is located within the vasculature of the brain of the subject in the vicinity of a globus pallidus interna
4274
wherein the target site is located within a vasculature of the brain of the subject in the vicinity of an insula
4276
wherein the target site is located within a vasculature of the brain of the subject in the vicinity of a deep brain
4278
4254
if a branch point including two or more branches within the body tube tree is reached by the self-propelling electromagnetic stimulation device, causing the self-propelling electromagnetic stimulation device to enter a selected branch
4256
causing the self-propelling electromagnetic stimulation device to stop traveling upon reaching the target site
End
4258

FIG. 60

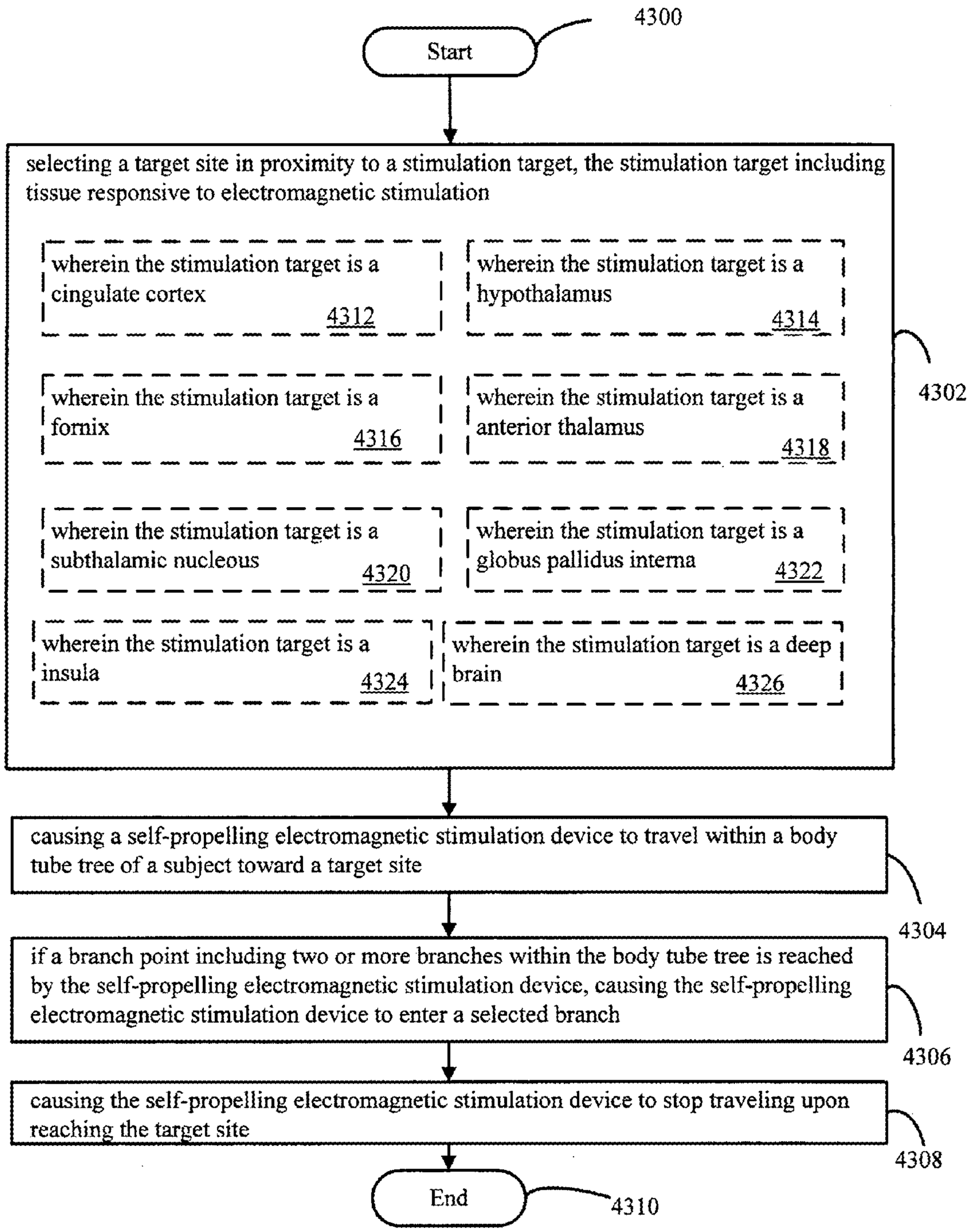
4300
Start
selecting a target site in proximity to a stimulation target, the stimulation target including tissue responsive to electromagnetic stimulation
wherein the stimulation target is a cingulate cortex 4312
wherein the stimulation target is a hypothalamus 4314
wherein the stimulation target is a fornix 4316
wherein the stimulation target is a anterior thalamus 4318
wherein the stimulation target is a subthalamic nucleous 4320
wherein the stimulation target is a globus pallidus interna 4322
wherein the stimulation target is a insula 4324
wherein the stimulation target is a deep brain 4326
4302
causing a self-propelling electromagnetic stimulation device to travel within a body tube tree of a subject toward a target site
4304
if a branch point including two or more branches within the body tube tree is reached by the self-propelling electromagnetic stimulation device, causing the self-propelling electromagnetic stimulation device to enter a selected branch
4306
causing the self-propelling electromagnetic stimulation device to stop traveling upon reaching the target site
4308
End
4310

FIG. 61

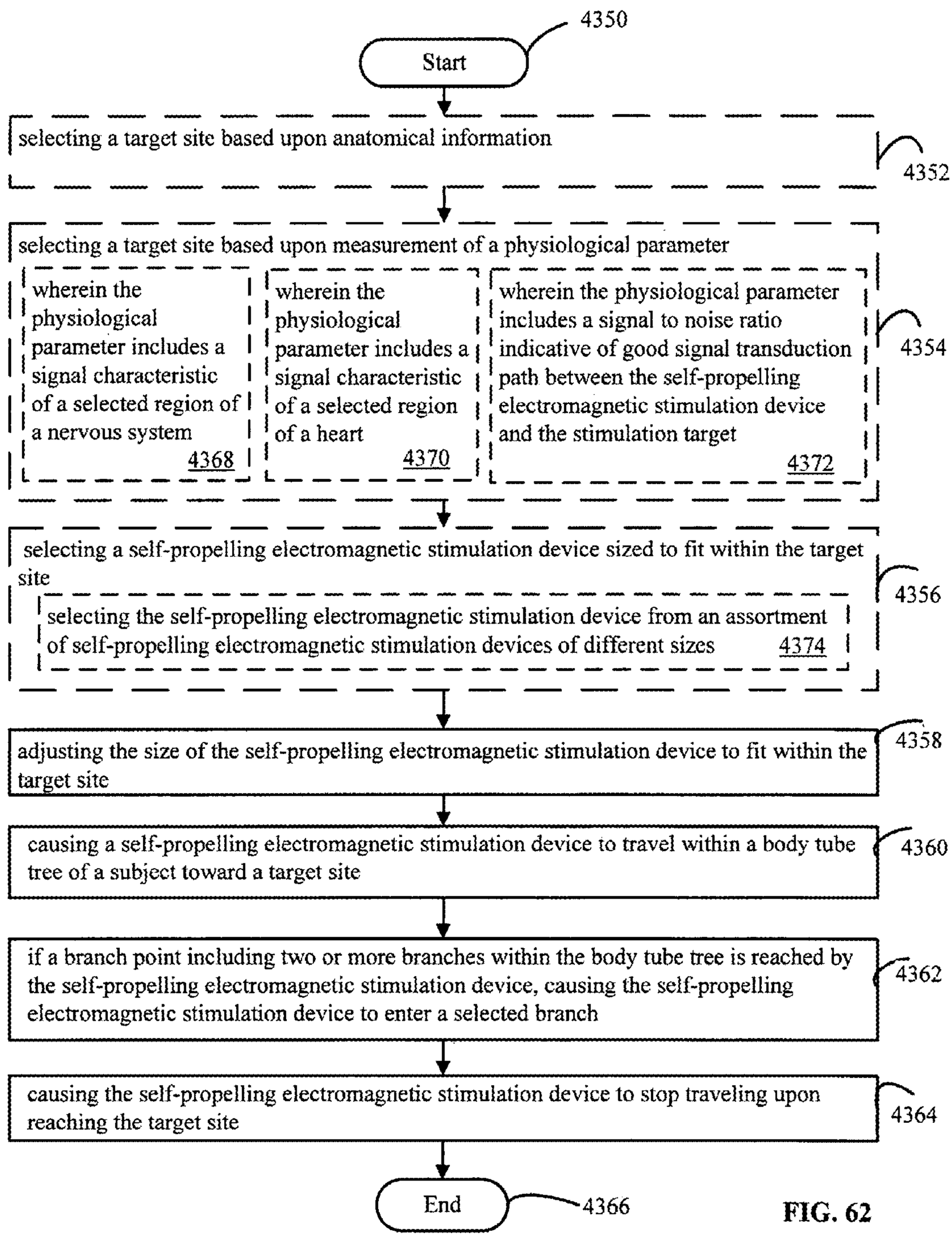
4350
Start
selecting a target site based upon anatomical information
4352
selecting a target site based upon measurement of a physiological parameter
wherein the physiological parameter includes a signal characteristic of a selected region of a nervous system
4368
wherein the physiological parameter includes a signal characteristic of a selected region of a heart
4370
wherein the physiological parameter includes a signal to noise ratio indicative of good signal transduction path between the self-propelling electromagnetic stimulation device and the stimulation target
4372
4354
selecting a self-propelling electromagnetic stimulation device sized to fit within the target site
selecting the self-propelling electromagnetic stimulation device from an assortment of self-propelling electromagnetic stimulation devices of different sizes
4374
4356
adjusting the size of the self-propelling electromagnetic stimulation device to fit within the target site
4358
causing a self-propelling electromagnetic stimulation device to travel within a body tube tree of a subject toward a target site
4360
if a branch point including two or more branches within the body tube tree is reached by the self-propelling electromagnetic stimulation device, causing the self-propelling electromagnetic stimulation device to enter a selected branch
4362
causing the self-propelling electromagnetic stimulation device to stop traveling upon reaching the target site
4364
End
4366

FIG. 62

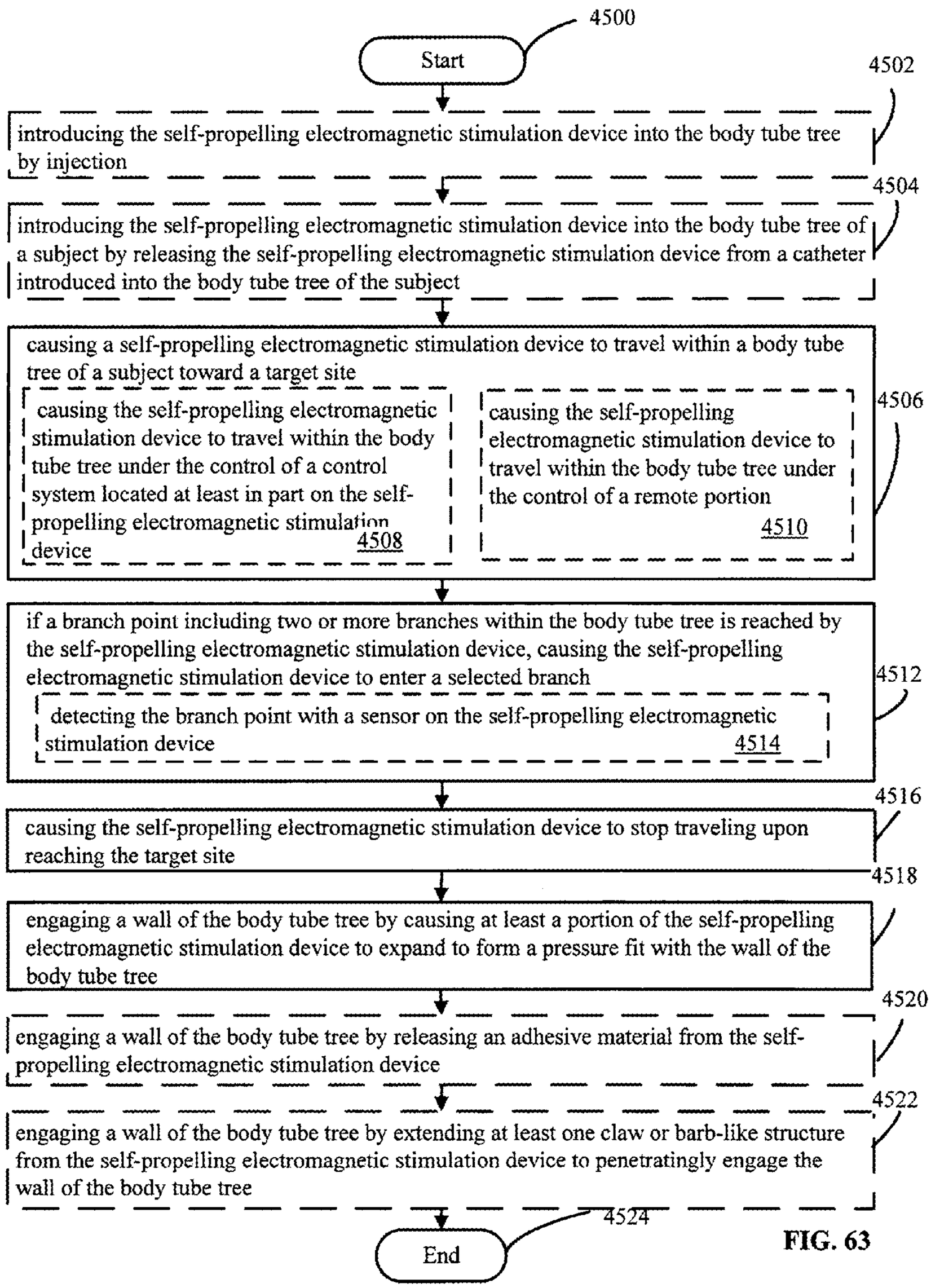
4500
Start
4502
introducing the self-propelling electromagnetic stimulation device into the body tube tree by injection
4504
introducing the self-propelling electromagnetic stimulation device into the body tube tree of a subject by releasing the self-propelling electromagnetic stimulation device from a catheter introduced into the body tube tree of the subject
causing a self-propelling electromagnetic stimulation device to travel within a body tube tree of a subject toward a target site
causing the self-propelling electromagnetic stimulation device to travel within the body tube tree under the control of a control system located at least in part on the self-propelling electromagnetic stimulation device 4508
causing the self-propelling electromagnetic stimulation device to travel within the body tube tree under the control of a remote portion 4510
4506
if a branch point including two or more branches within the body tube tree is reached by the self-propelling electromagnetic stimulation device, causing the self-propelling electromagnetic stimulation device to enter a selected branch
detecting the branch point with a sensor on the self-propelling electromagnetic stimulation device 4514
4512
4516
causing the self-propelling electromagnetic stimulation device to stop traveling upon reaching the target site
4518
engaging a wall of the body tube tree by causing at least a portion of the self-propelling electromagnetic stimulation device to expand to form a pressure fit with the wall of the body tube tree
4520
engaging a wall of the body tube tree by releasing an adhesive material from the self-propelling electromagnetic stimulation device
4522
engaging a wall of the body tube tree by extending at least one claw or barb-like structure from the self-propelling electromagnetic stimulation device to penetratingly engage the wall of the body tube tree
4524
End

FIG. 63

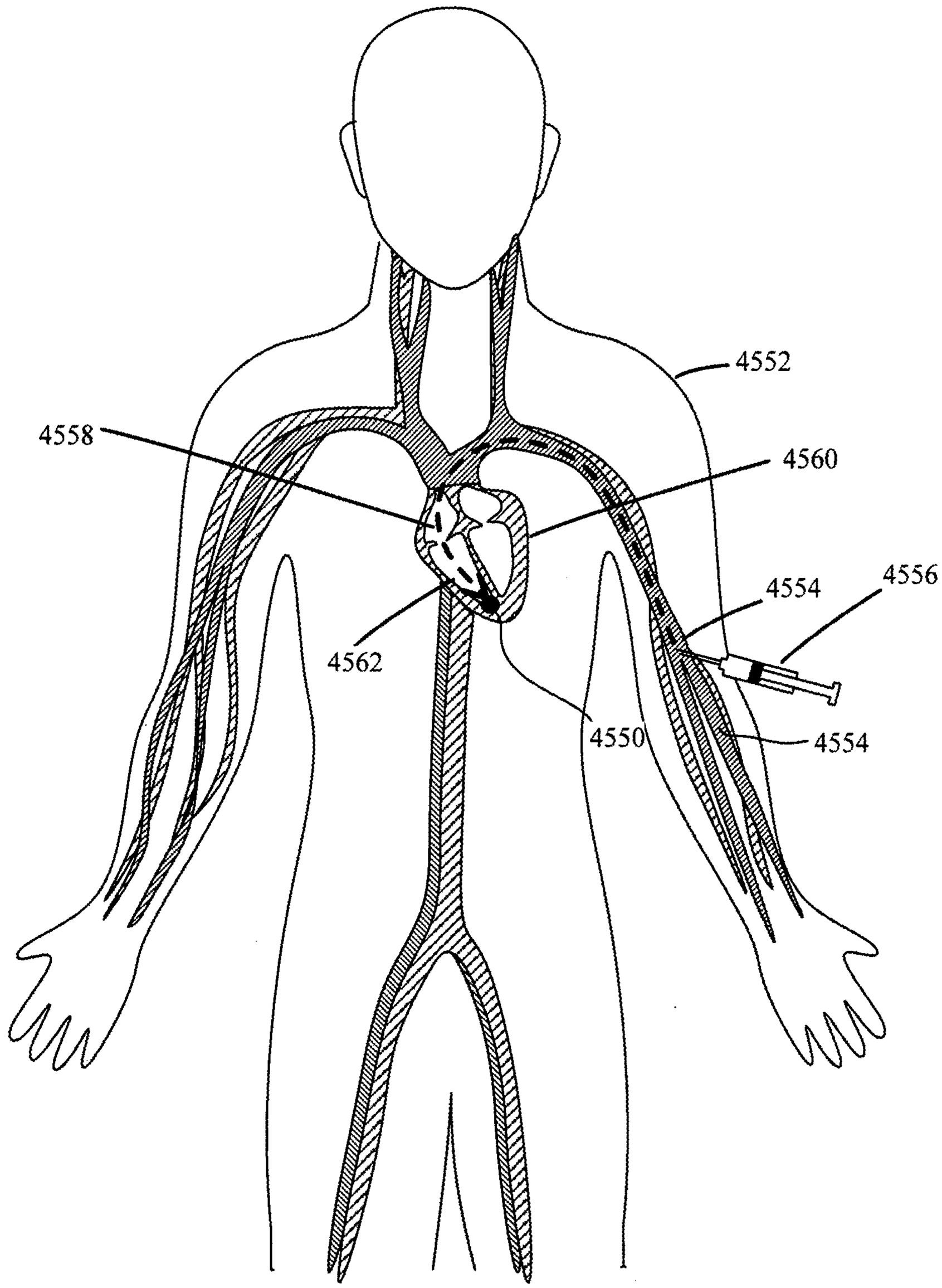

FIG. 64

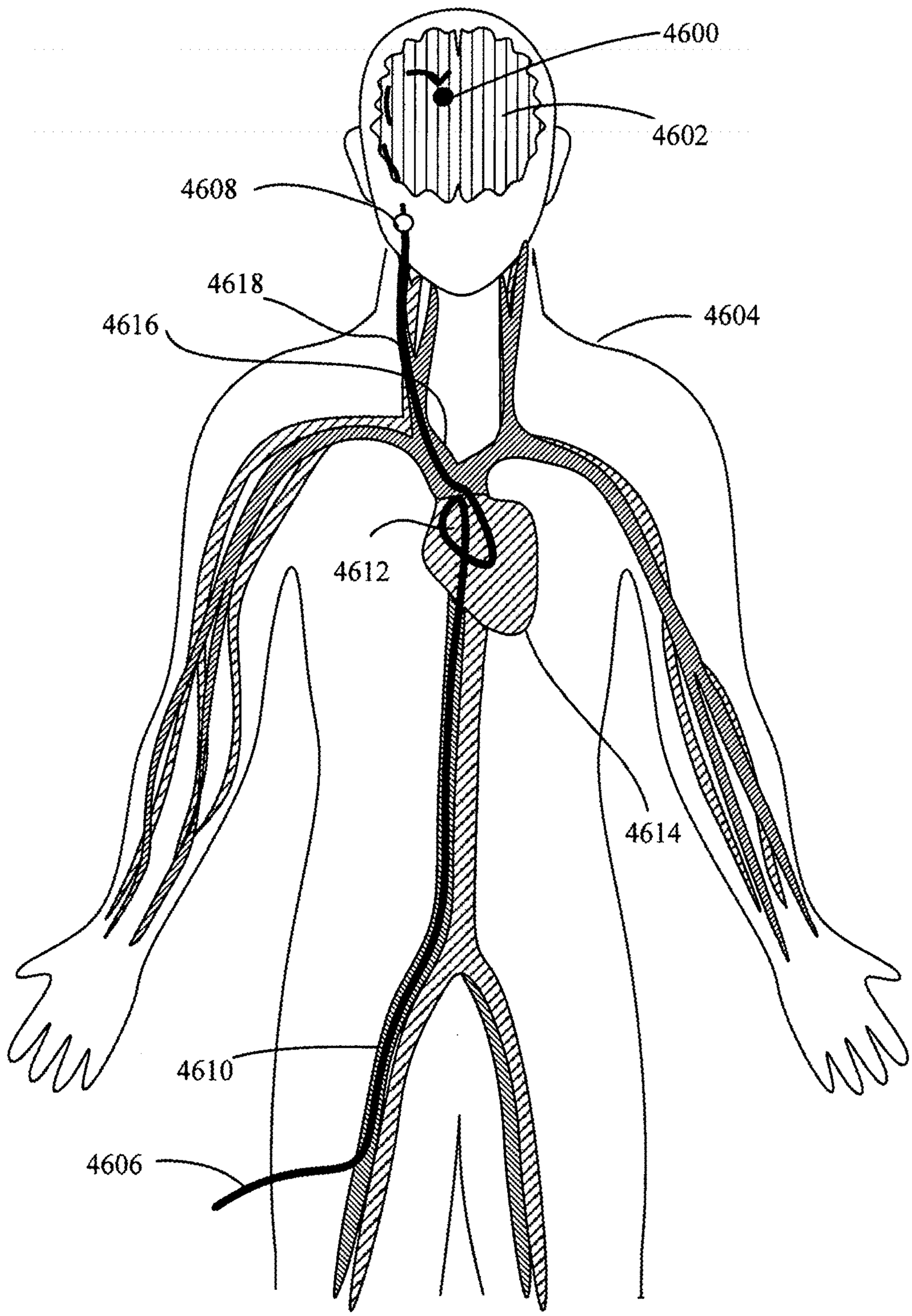

FIG. 65

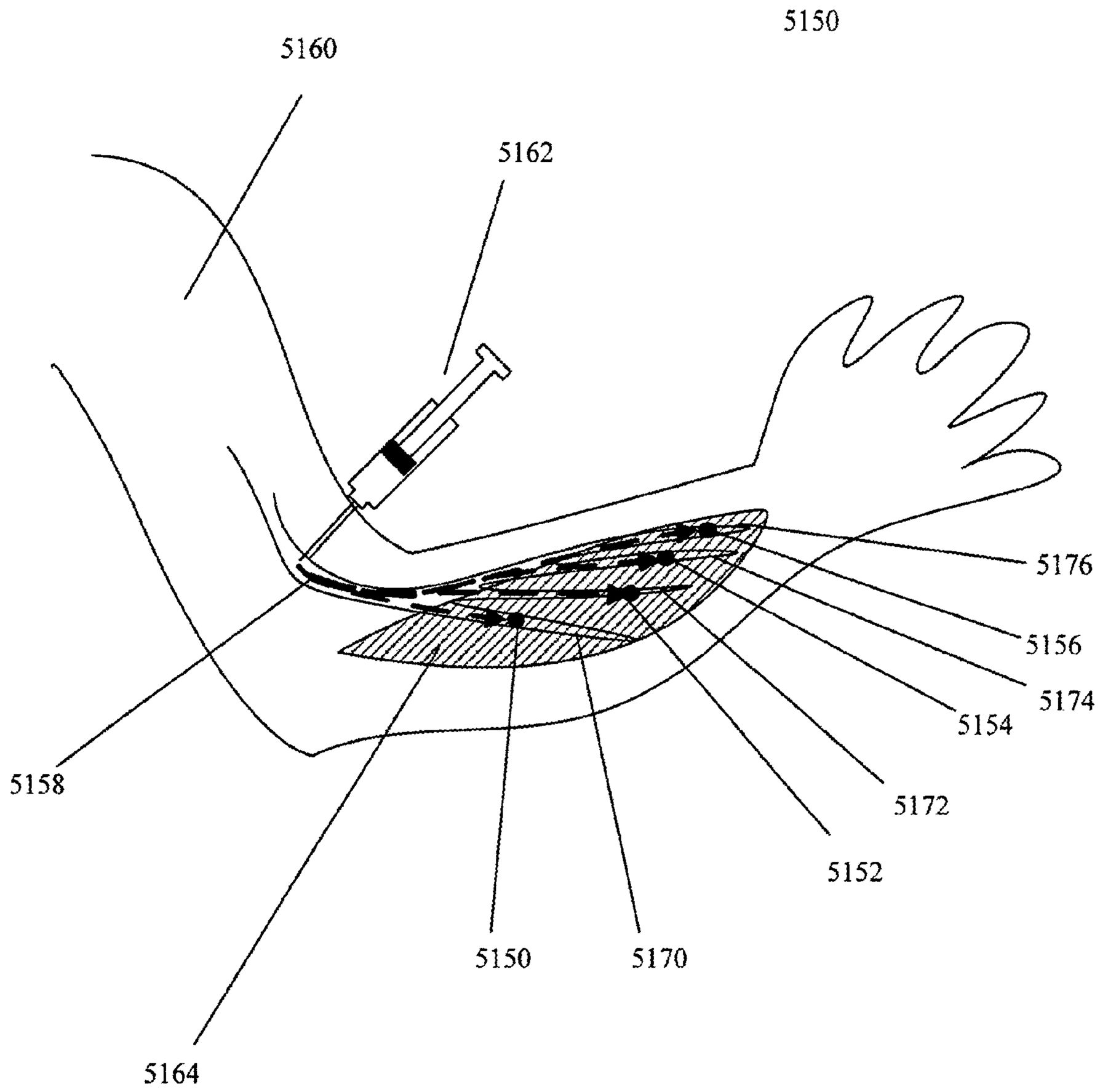
5150
5160
5162
5176
5156
5174
5154
5158
5172
5152
5150
5170
5164

FIG. 66

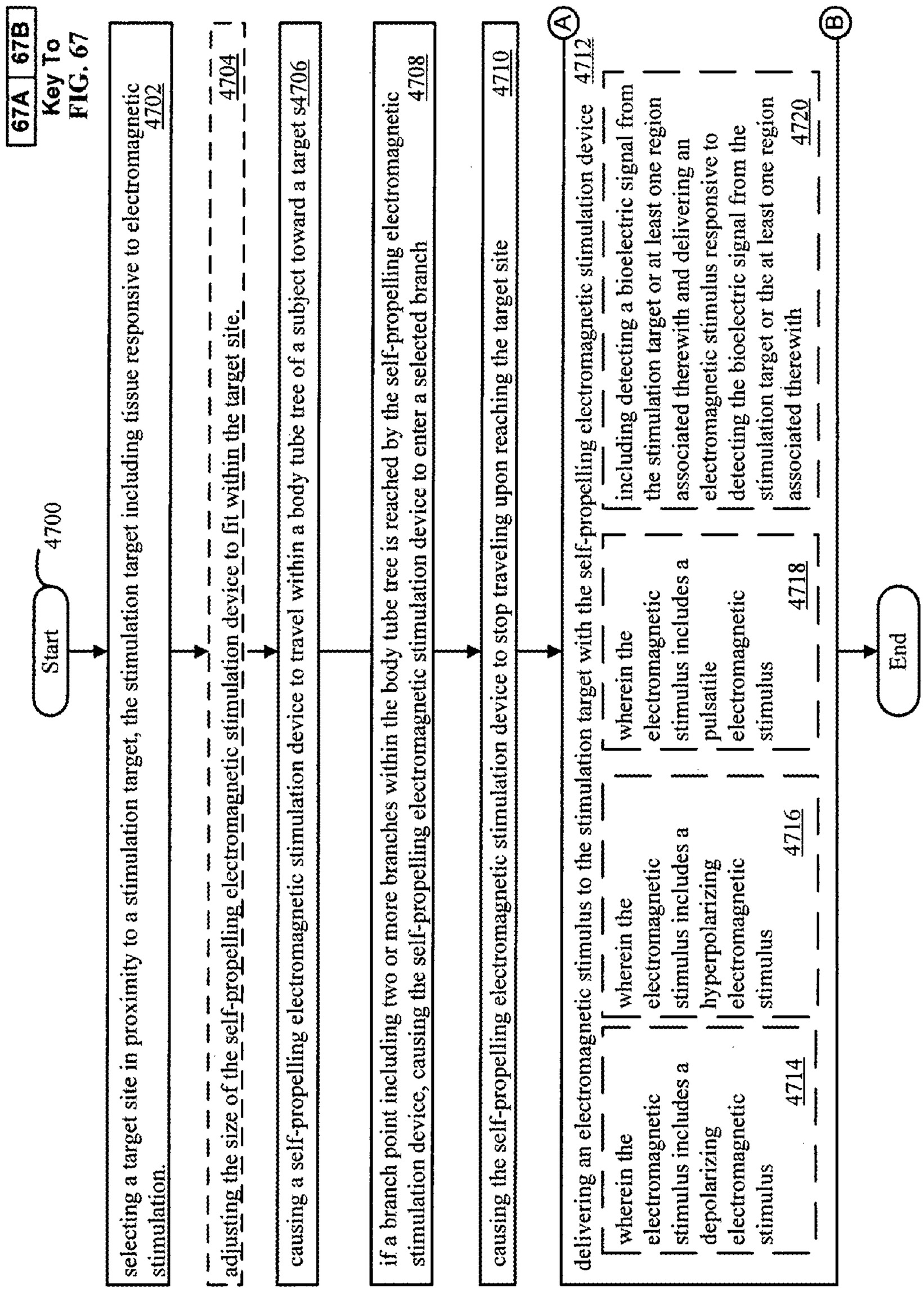
67A 67B
Key To FIG. 67
Start
4700
selecting a target site in proximity to a stimulation target, the stimulation target including tissue responsive to electromagnetic stimulation. 4702
adjusting the size of the self-propelling electromagnetic stimulation device to fit within the target site. 4704
causing a self-propelling electromagnetic stimulation device to travel within a body tube tree of a subject toward a target s4706
if a branch point including two or more branches within the body tube tree is reached by the self-propelling electromagnetic stimulation device, causing the self-propelling electromagnetic stimulation device to enter a selected branch 4708
causing the self-propelling electromagnetic stimulation device to stop traveling upon reaching the target site 4710
A
delivering an electromagnetic stimulus to the stimulation target with the self-propelling electromagnetic stimulation device 4712
wherein the electromagnetic stimulus includes a depolarizing electromagnetic stimulus 4714
wherein the electromagnetic stimulus includes a hyperpolarizing electromagnetic stimulus 4716
wherein the electromagnetic stimulus includes a pulsatile electromagnetic stimulus 4718
including detecting a bioelectric signal from the stimulation target or at least one region associated therewith and delivering an electromagnetic stimulus responsive to detecting the bioelectric signal from the stimulation target or the at least one region associated therewith 4720
B
End

FIG. 67A

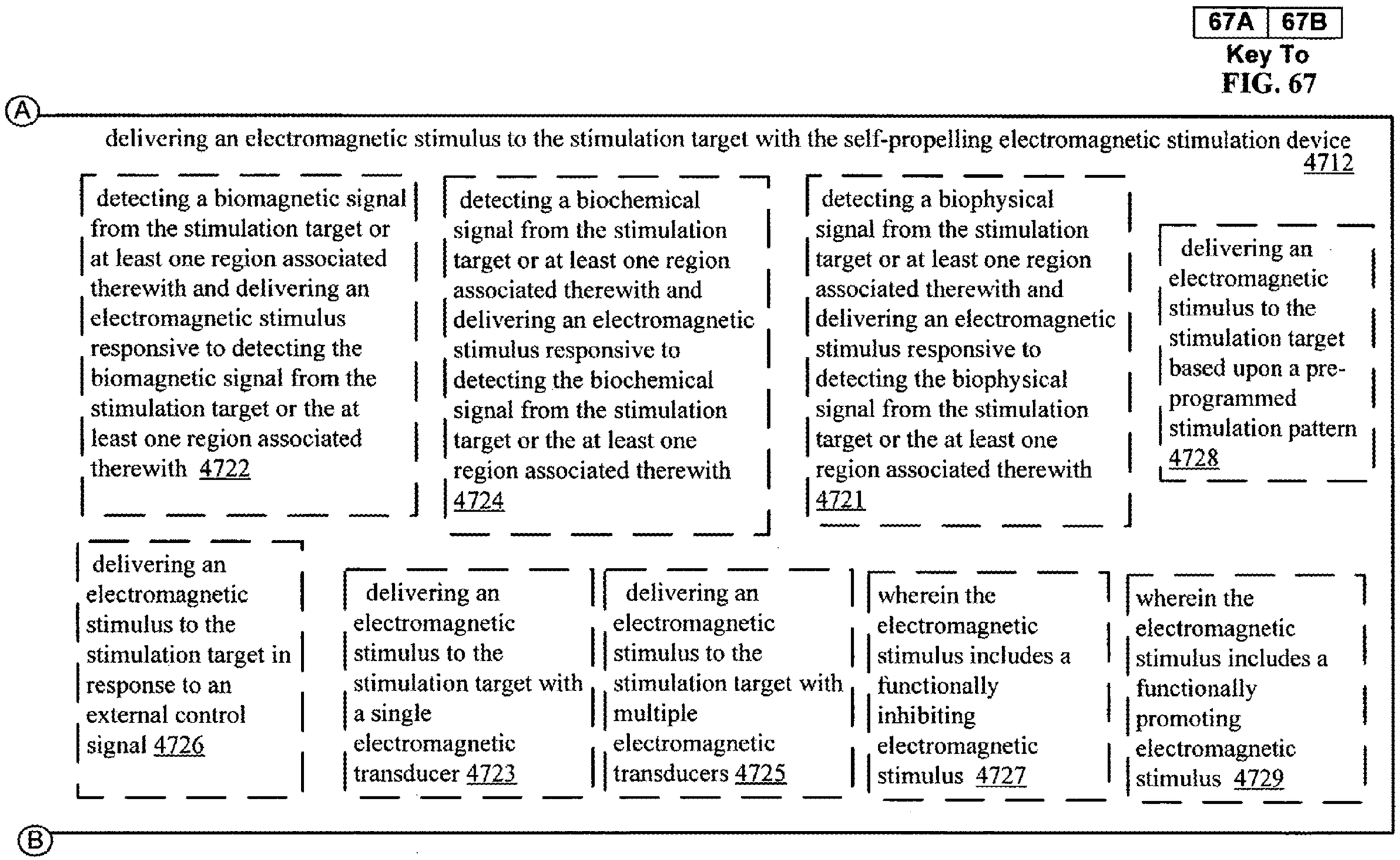
67A 67B
Key To
FIG. 67
A
delivering an electromagnetic stimulus to the stimulation target with the self-propelling electromagnetic stimulation device 4712
detecting a biomagnetic signal from the stimulation target or at least one region associated therewith and delivering an electromagnetic stimulus responsive to detecting the biomagnetic signal from the stimulation target or the at least one region associated therewith 4722
detecting a biochemical signal from the stimulation target or at least one region associated therewith and delivering an electromagnetic stimulus responsive to detecting the biochemical signal from the stimulation target or the at least one region associated therewith 4724
detecting a biophysical signal from the stimulation target or at least one region associated therewith and delivering an electromagnetic stimulus responsive to detecting the biophysical signal from the stimulation target or the at least one region associated therewith 4721
delivering an electromagnetic stimulus to the stimulation target based upon a pre-programmed stimulation pattern 4728
delivering an electromagnetic stimulus to the stimulation target in response to an external control signal 4726
delivering an electromagnetic stimulus to the stimulation target with a single electromagnetic transducer 4723
delivering an electromagnetic stimulus to the stimulation target with multiple electromagnetic transducers 4725
wherein the electromagnetic stimulus includes a functionally inhibiting electromagnetic stimulus 4727
wherein the electromagnetic stimulus includes a functionally promoting electromagnetic stimulus 4729
B

FIG. 67B

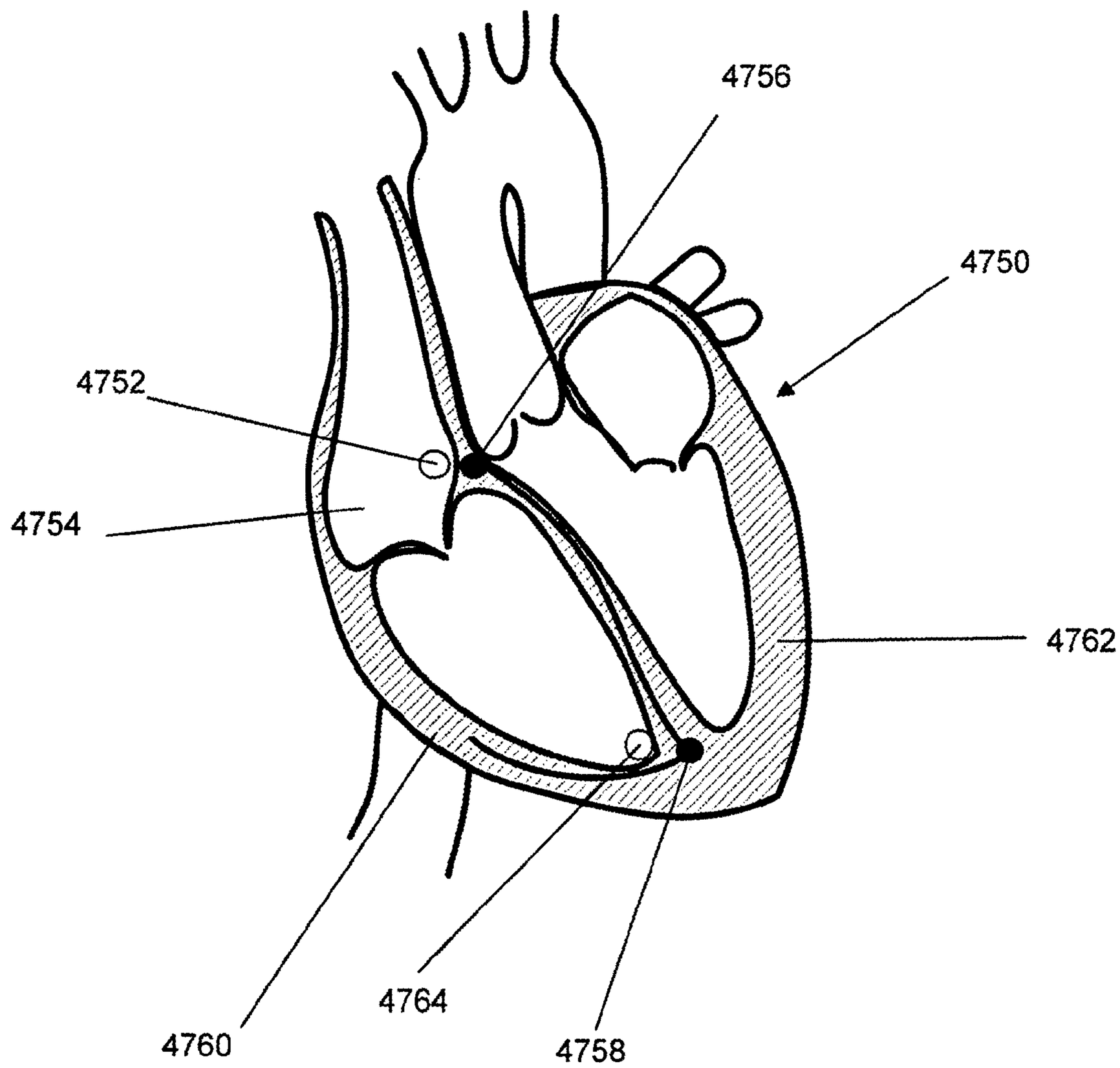

FIG. 68

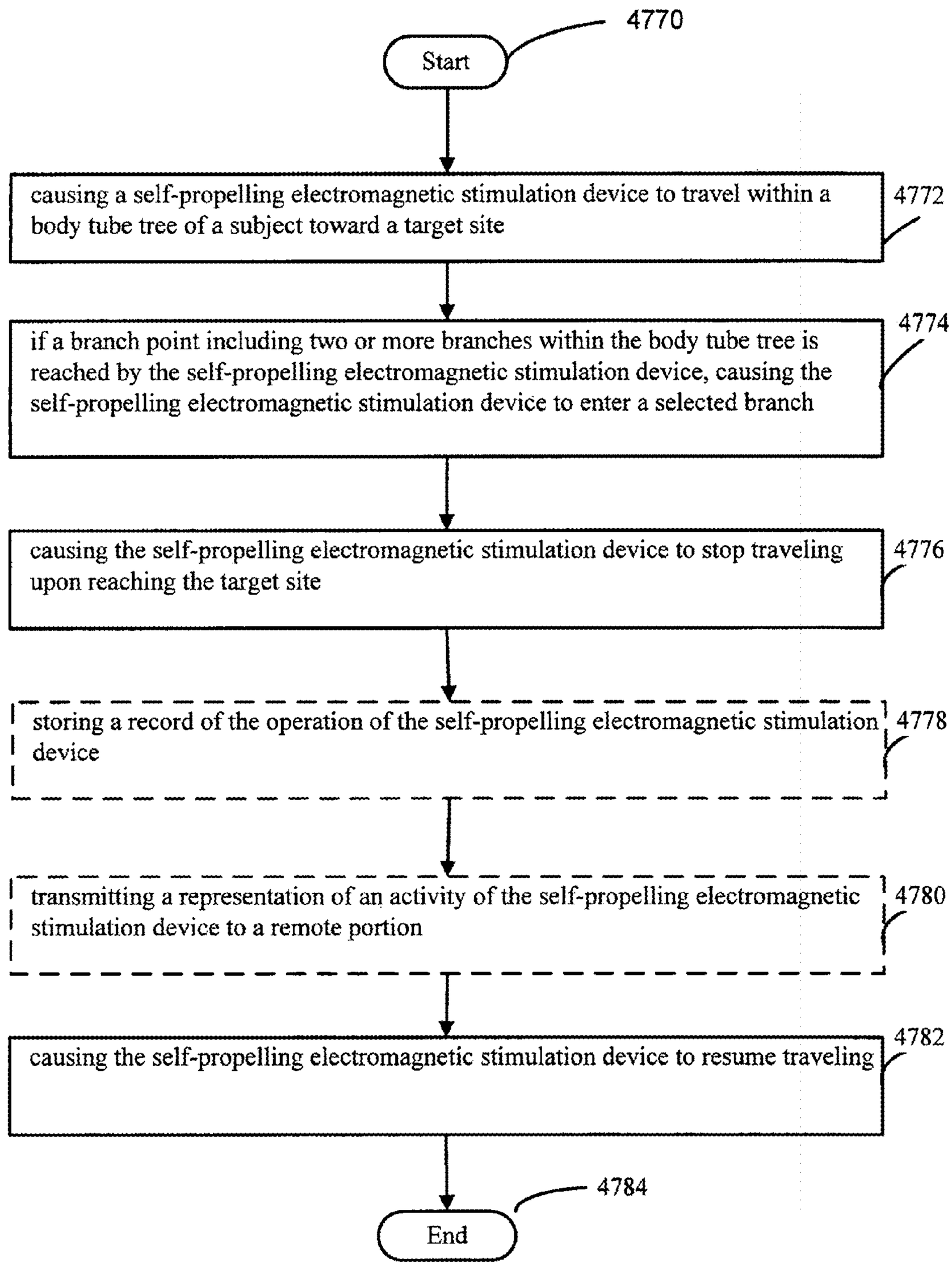
4770
Start
causing a self-propelling electromagnetic stimulation device to travel within a body tube tree of a subject toward a target site
4772
if a branch point including two or more branches within the body tube tree is reached by the self-propelling electromagnetic stimulation device, causing the self-propelling electromagnetic stimulation device to enter a selected branch
4774
causing the self-propelling electromagnetic stimulation device to stop traveling upon reaching the target site
4776
storing a record of the operation of the self-propelling electromagnetic stimulation device
4778
transmitting a representation of an activity of the self-propelling electromagnetic stimulation device to a remote portion
4780
causing the self-propelling electromagnetic stimulation device to resume traveling
4782
4784
End

FIG. 69

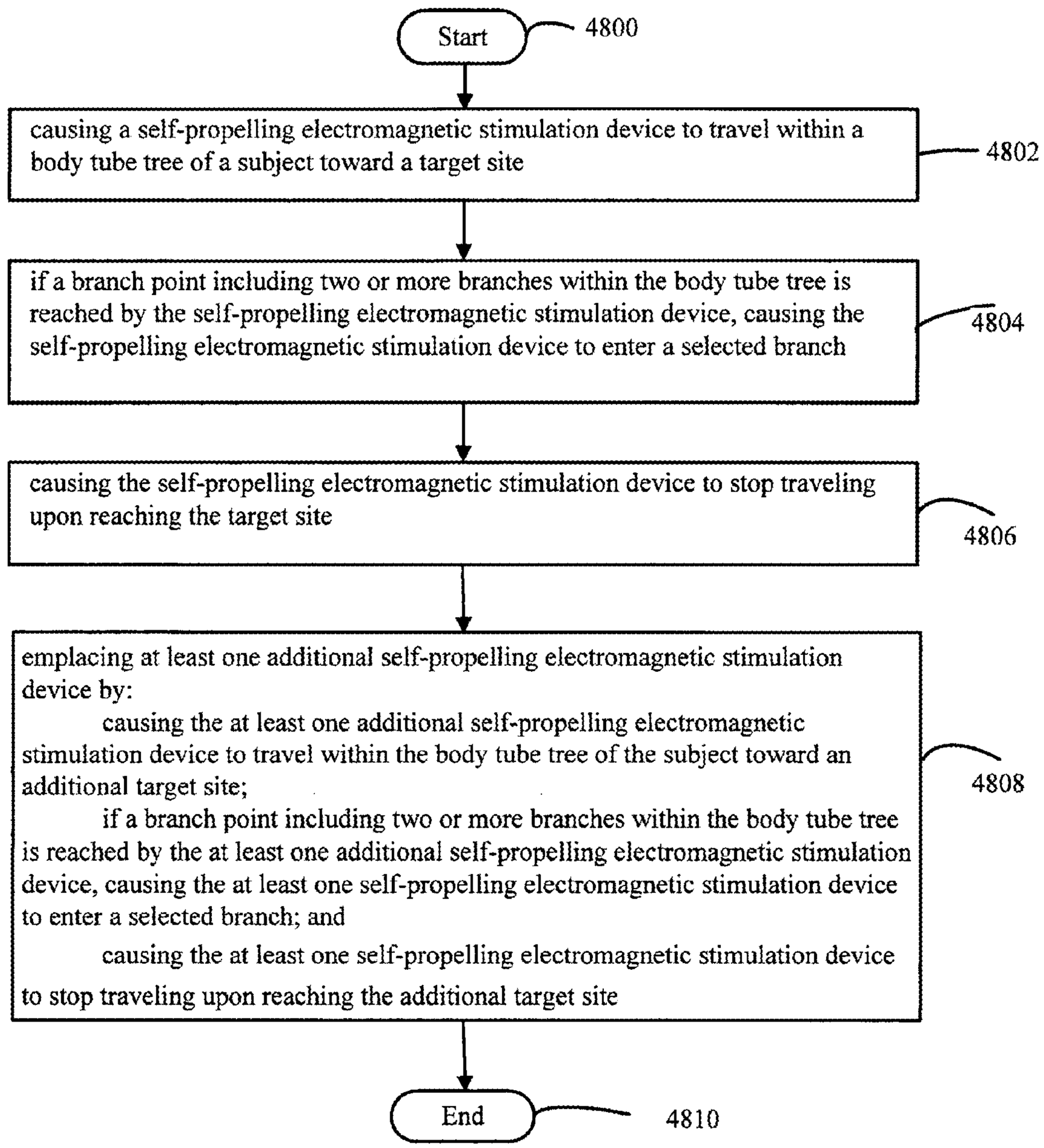
Start
4800
causing a self-propelling electromagnetic stimulation device to travel within a body tube tree of a subject toward a target site
4802
if a branch point including two or more branches within the body tube tree is reached by the self-propelling electromagnetic stimulation device, causing the self-propelling electromagnetic stimulation device to enter a selected branch
4804
causing the self-propelling electromagnetic stimulation device to stop traveling upon reaching the target site
4806
emplacing at least one additional self-propelling electromagnetic stimulation device by:
causing the at least one additional self-propelling electromagnetic stimulation device to travel within the body tube tree of the subject toward an additional target site;
if a branch point including two or more branches within the body tube tree is reached by the at least one additional self-propelling electromagnetic stimulation device, causing the at least one self-propelling electromagnetic stimulation device to enter a selected branch; and
causing the at least one self-propelling electromagnetic stimulation device to stop traveling upon reaching the additional target site
4808
End
4810

FIG. 70

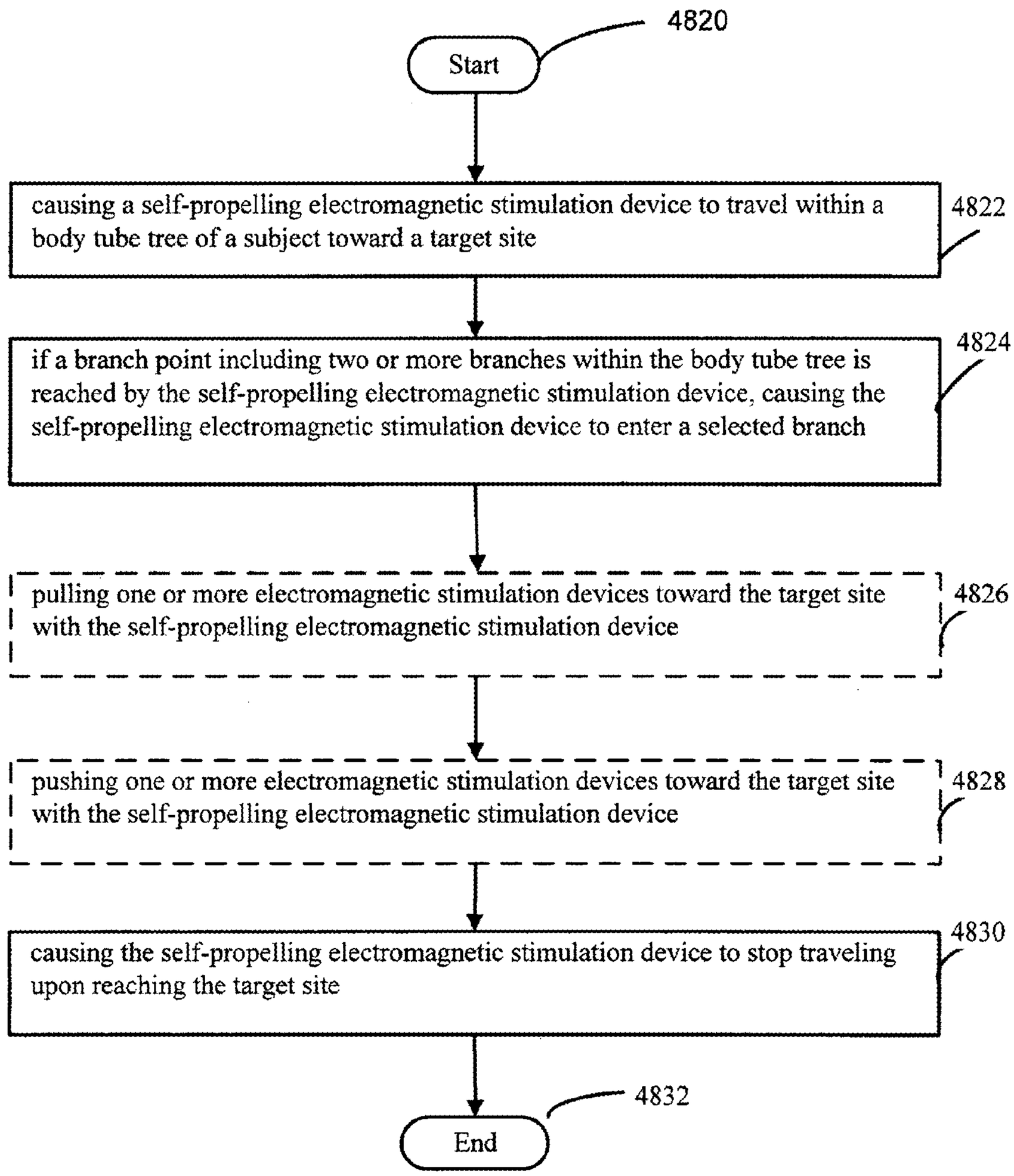
4820
Start
causing a self-propelling electromagnetic stimulation device to travel within a body tube tree of a subject toward a target site
4822
if a branch point including two or more branches within the body tube tree is reached by the self-propelling electromagnetic stimulation device, causing the self-propelling electromagnetic stimulation device to enter a selected branch
4824
pulling one or more electromagnetic stimulation devices toward the target site with the self-propelling electromagnetic stimulation device
4826
pushing one or more electromagnetic stimulation devices toward the target site with the self-propelling electromagnetic stimulation device
4828
causing the self-propelling electromagnetic stimulation device to stop traveling upon reaching the target site
4830
End
4832

FIG. 71

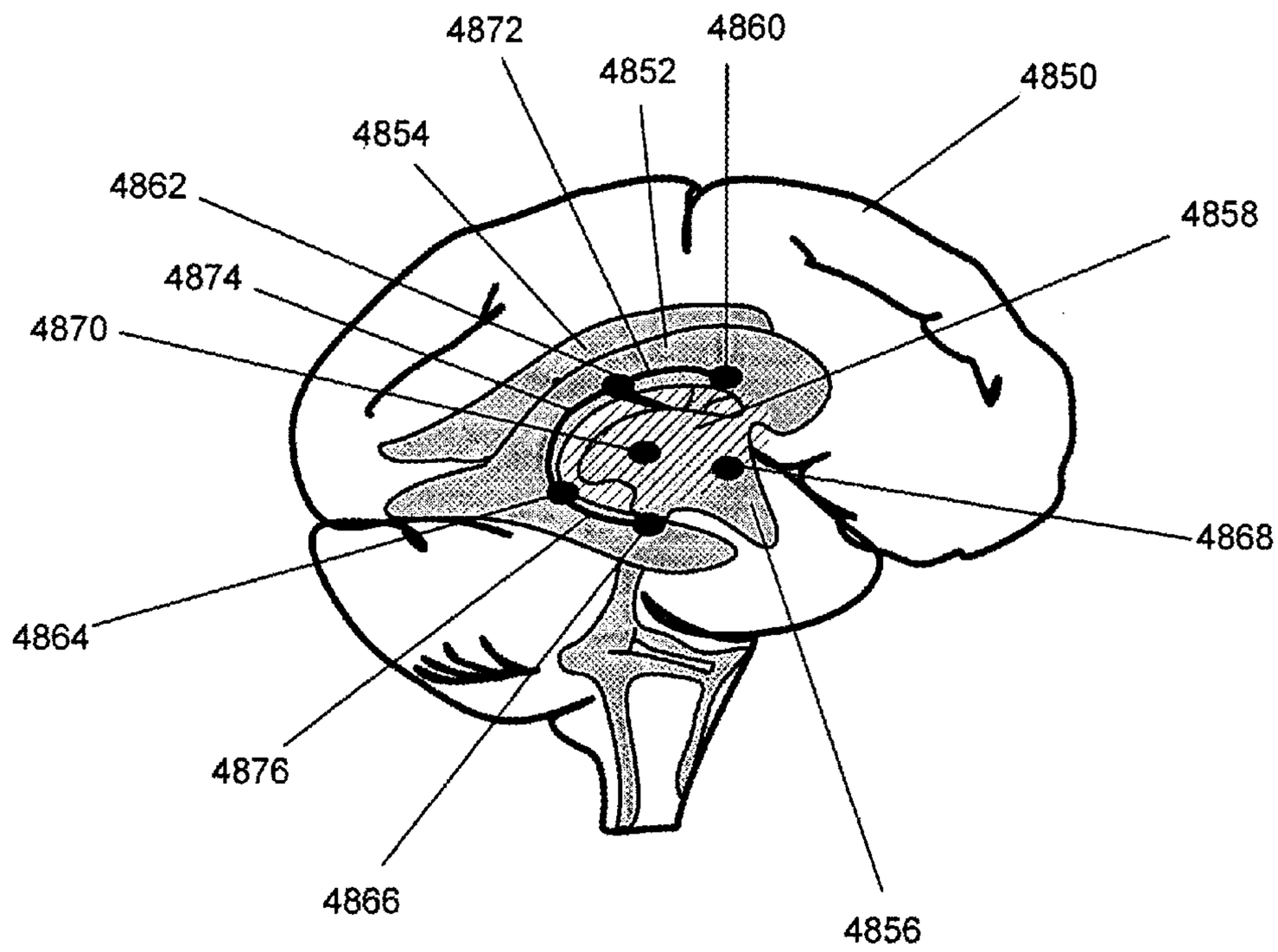
4872
4860
4852
4850
4854
4862
4858
4874
4870
4868
4864
4876
4866
4856

FIG. 72

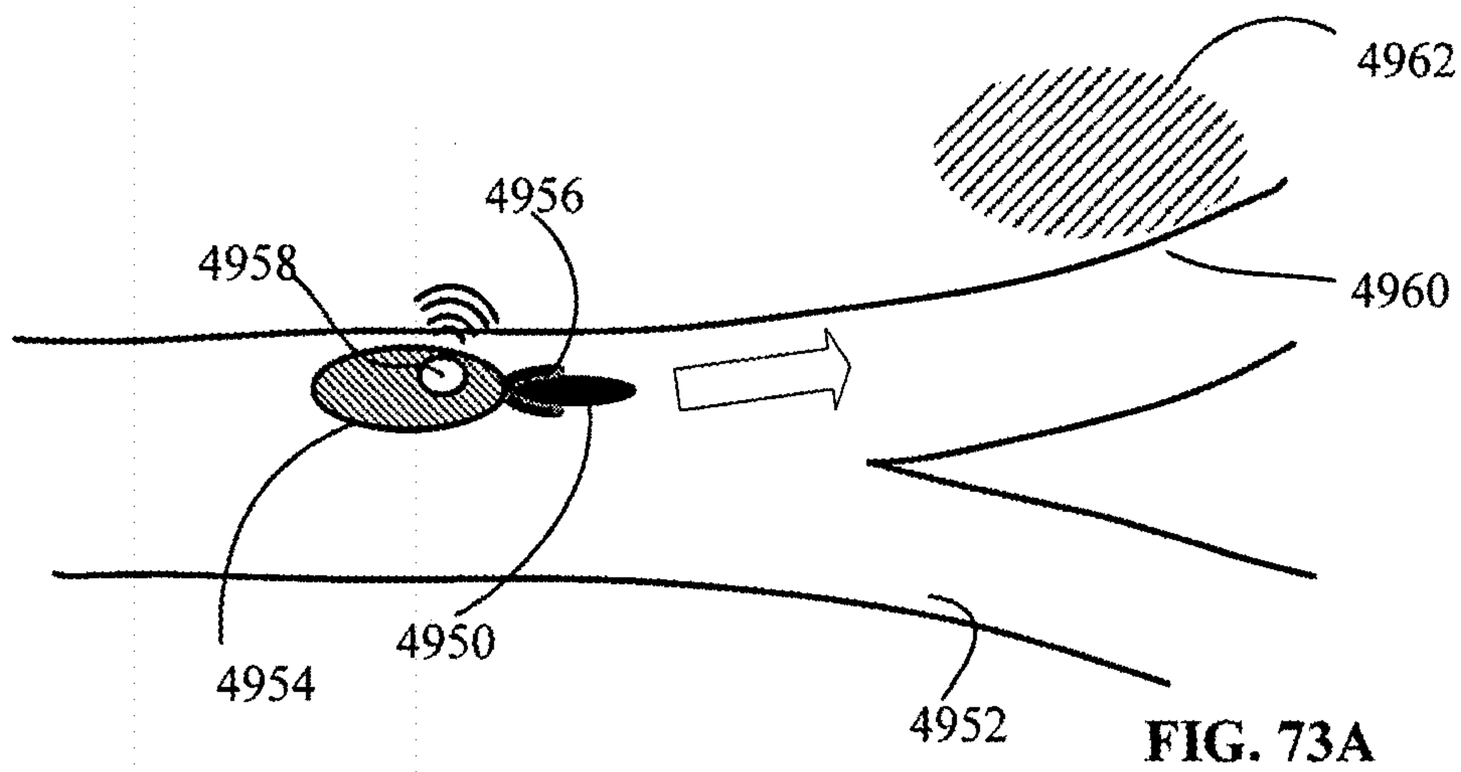

FIG. 73A

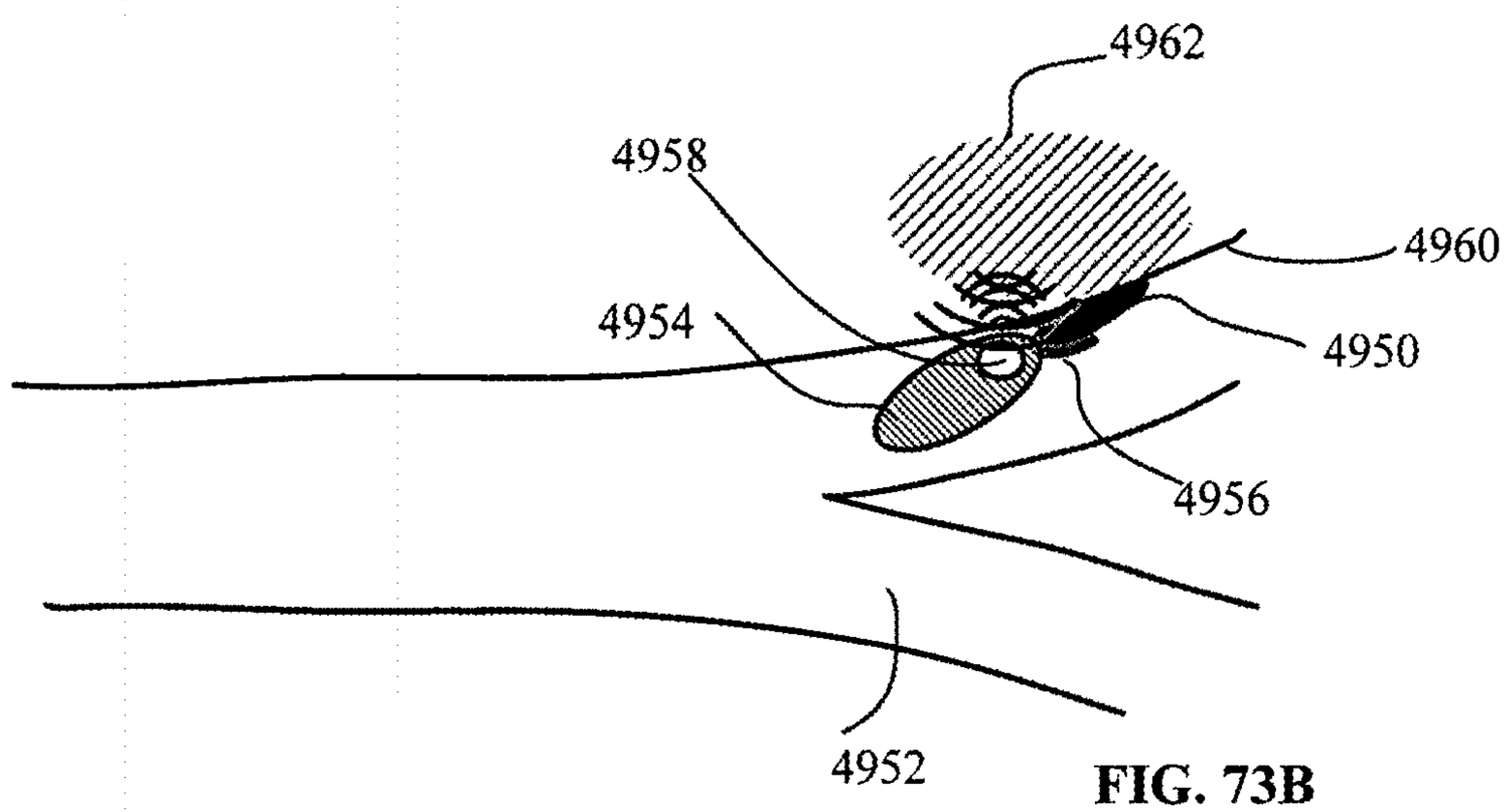

FIG. 73B

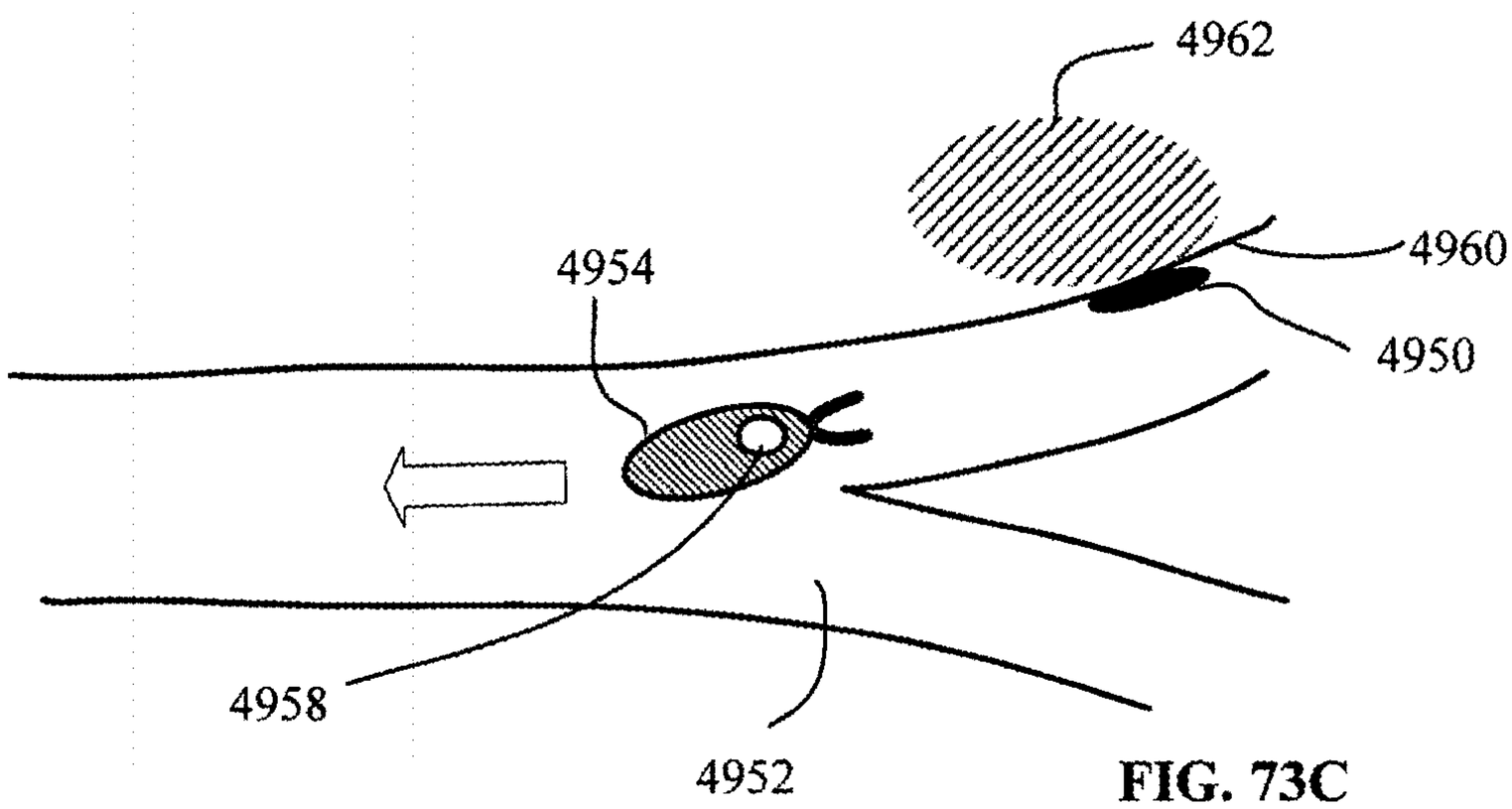

FIG. 73C

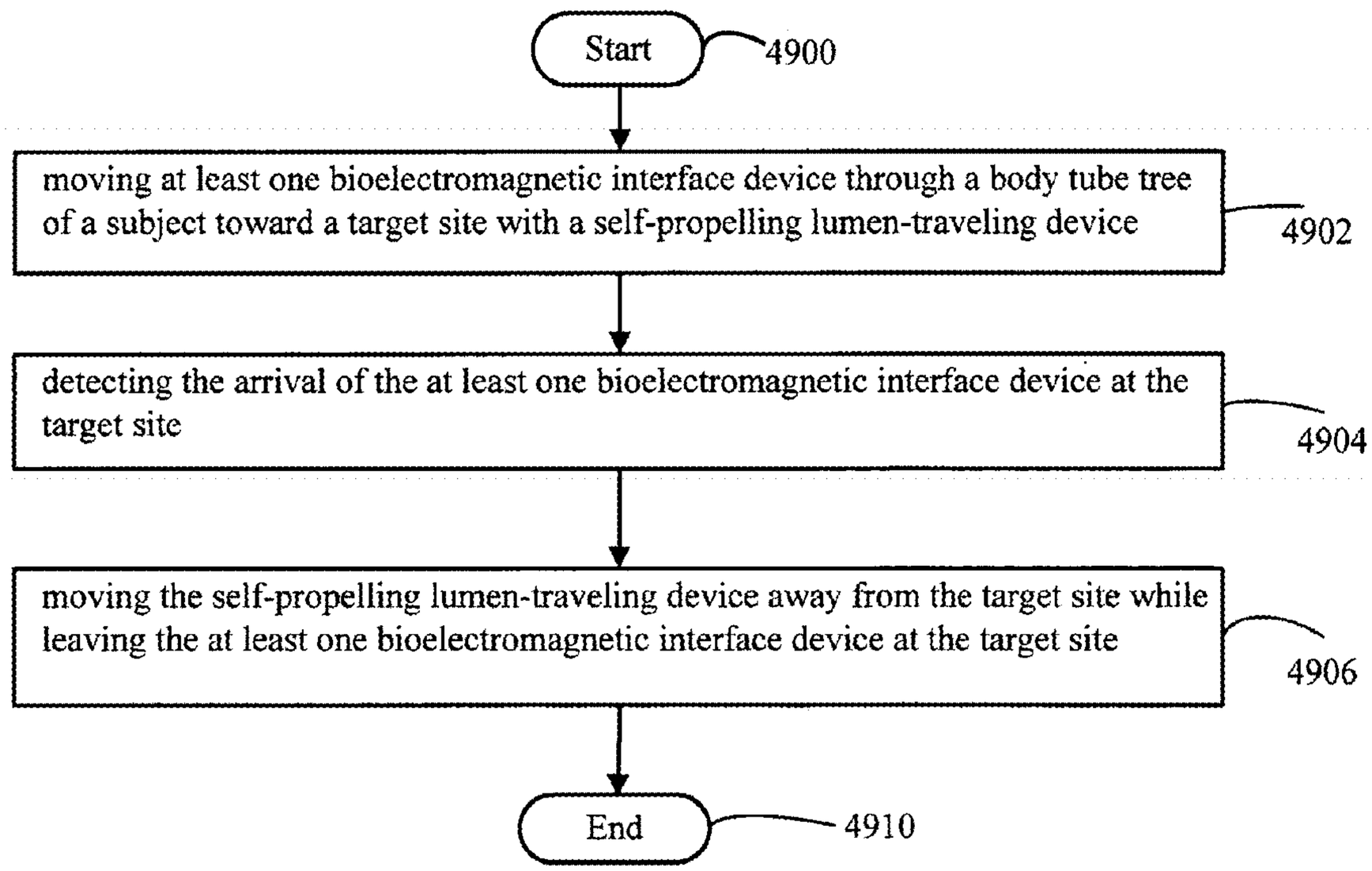
Start
4900
moving at least one bioelectromagnetic interface device through a body tube tree of a subject toward a target site with a self-propelling lumen-traveling device
4902
detecting the arrival of the at least one bioelectromagnetic interface device at the target site
4904
moving the self-propelling lumen-traveling device away from the target site while leaving the at least one bioelectromagnetic interface device at the target site
4906
End
4910

FIG. 74

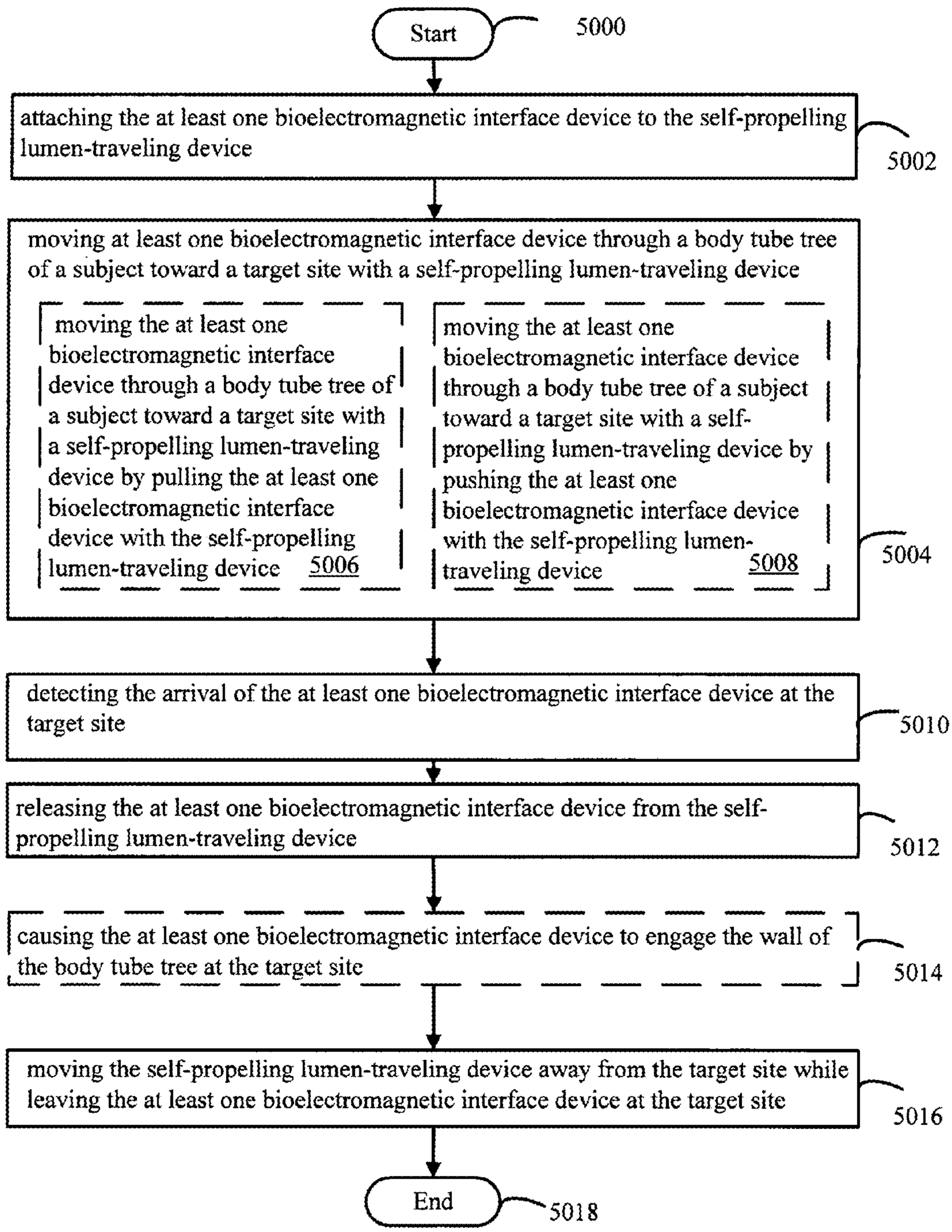
Start
5000
attaching the at least one bioelectromagnetic interface device to the self-propelling lumen-traveling device
5002
moving at least one bioelectromagnetic interface device through a body tube tree of a subject toward a target site with a self-propelling lumen-traveling device
moving the at least one bioelectromagnetic interface device through a body tube tree of a subject toward a target site with a self-propelling lumen-traveling device by pulling the at least one bioelectromagnetic interface device with the self-propelling lumen-traveling device
5006
moving the at least one bioelectromagnetic interface device through a body tube tree of a subject toward a target site with a self-propelling lumen-traveling device by pushing the at least one bioelectromagnetic interface device with the self-propelling lumen-traveling device
5008
5004
detecting the arrival of the at least one bioelectromagnetic interface device at the target site
5010
releasing the at least one bioelectromagnetic interface device from the self-propelling lumen-traveling device
5012
causing the at least one bioelectromagnetic interface device to engage the wall of the body tube tree at the target site
5014
moving the self-propelling lumen-traveling device away from the target site while leaving the at least one bioelectromagnetic interface device at the target site
5016
End
5018

FIG. 75

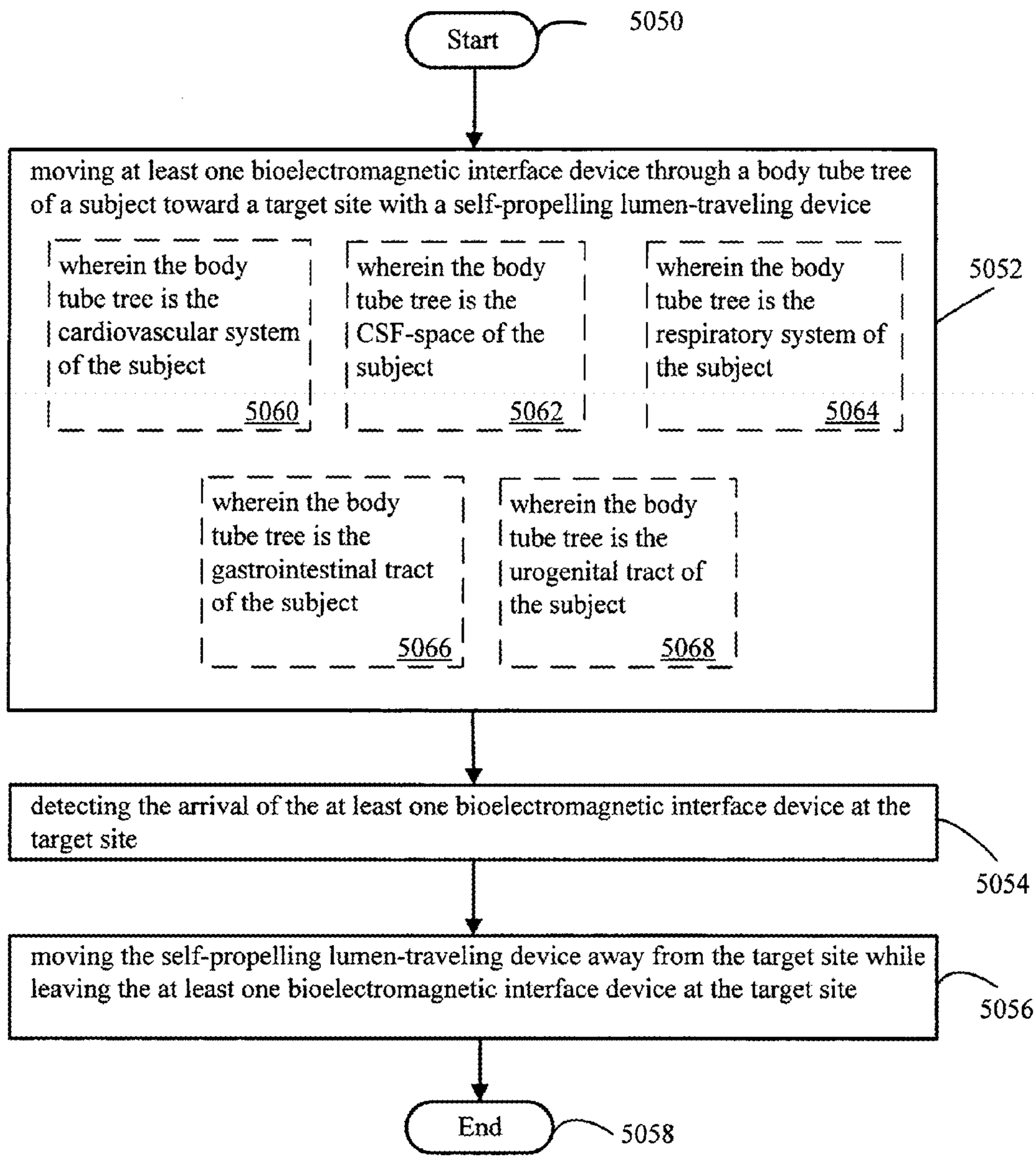
Start
5050
moving at least one bioelectromagnetic interface device through a body tube tree of a subject toward a target site with a self-propelling lumen-traveling device
wherein the body tube tree is the cardiovascular system of the subject
5060
wherein the body tube tree is the CSF-space of the subject
5062
wherein the body tube tree is the respiratory system of the subject
5064
5052
wherein the body tube tree is the gastrointestinal tract of the subject
5066
wherein the body tube tree is the urogenital tract of the subject
5068
detecting the arrival of the at least one bioelectromagnetic interface device at the target site
5054
moving the self-propelling lumen-traveling device away from the target site while leaving the at least one bioelectromagnetic interface device at the target site
5056
End
5058

FIG. 76

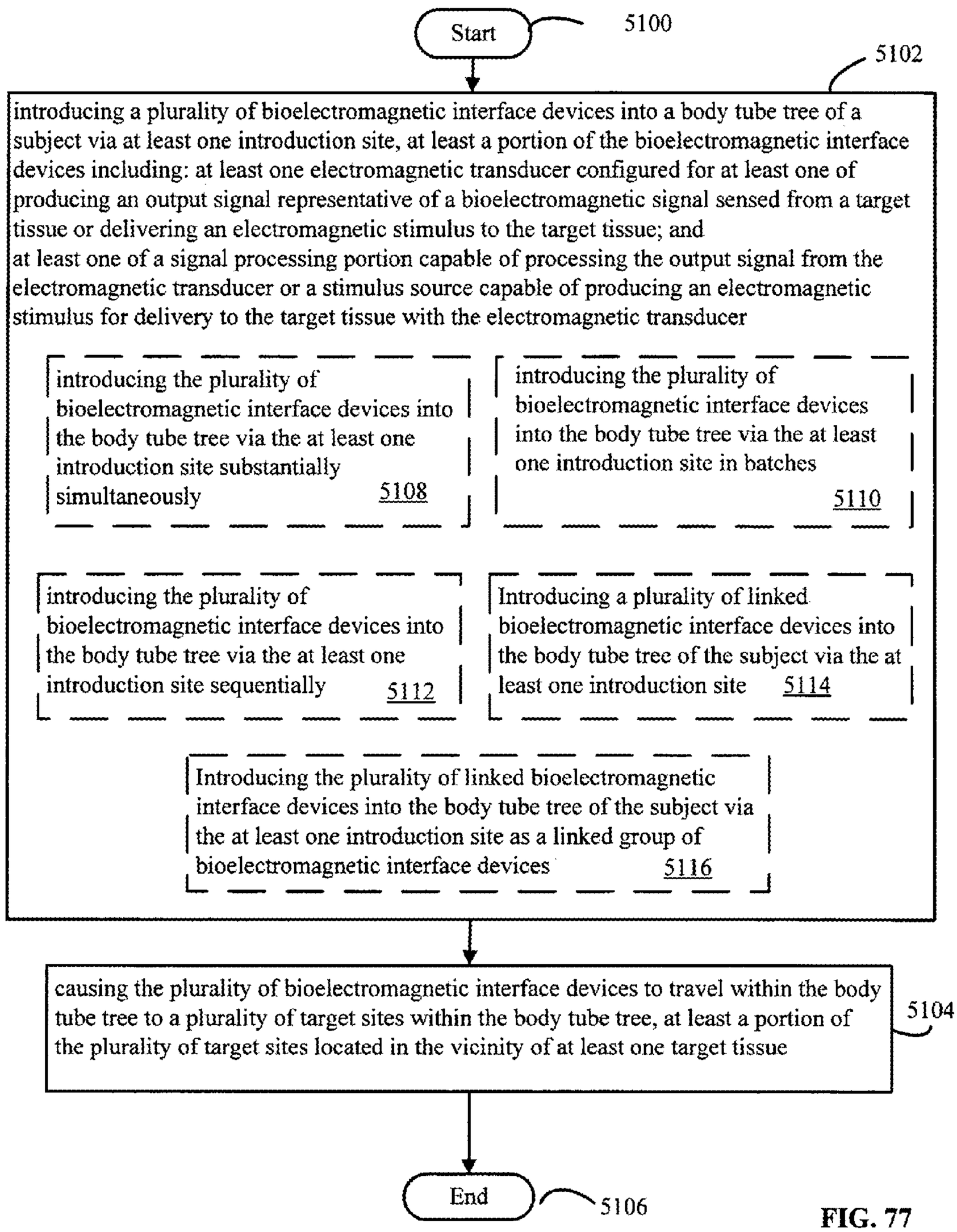
Start
5100
5102
introducing a plurality of bioelectromagnetic interface devices into a body tube tree of a subject via at least one introduction site, at least a portion of the bioelectromagnetic interface devices including: at least one electromagnetic transducer configured for at least one of producing an output signal representative of a bioelectromagnetic signal sensed from a target tissue or delivering an electromagnetic stimulus to the target tissue; and
at least one of a signal processing portion capable of processing the output signal from the electromagnetic transducer or a stimulus source capable of producing an electromagnetic stimulus for delivery to the target tissue with the electromagnetic transducer
introducing the plurality of bioelectromagnetic interface devices into the body tube tree via the at least one introduction site substantially simultaneously 5108
introducing the plurality of bioelectromagnetic interface devices into the body tube tree via the at least one introduction site in batches 5110
introducing the plurality of bioelectromagnetic interface devices into the body tube tree via the at least one introduction site sequentially 5112
Introducing a plurality of linked bioelectromagnetic interface devices into the body tube tree of the subject via the at least one introduction site 5114
Introducing the plurality of linked bioelectromagnetic interface devices into the body tube tree of the subject via the at least one introduction site as a linked group of bioelectromagnetic interface devices 5116
causing the plurality of bioelectromagnetic interface devices to travel within the body tube tree to a plurality of target sites within the body tube tree, at least a portion of the plurality of target sites located in the vicinity of at least one target tissue
5104
End
5106

FIG. 77

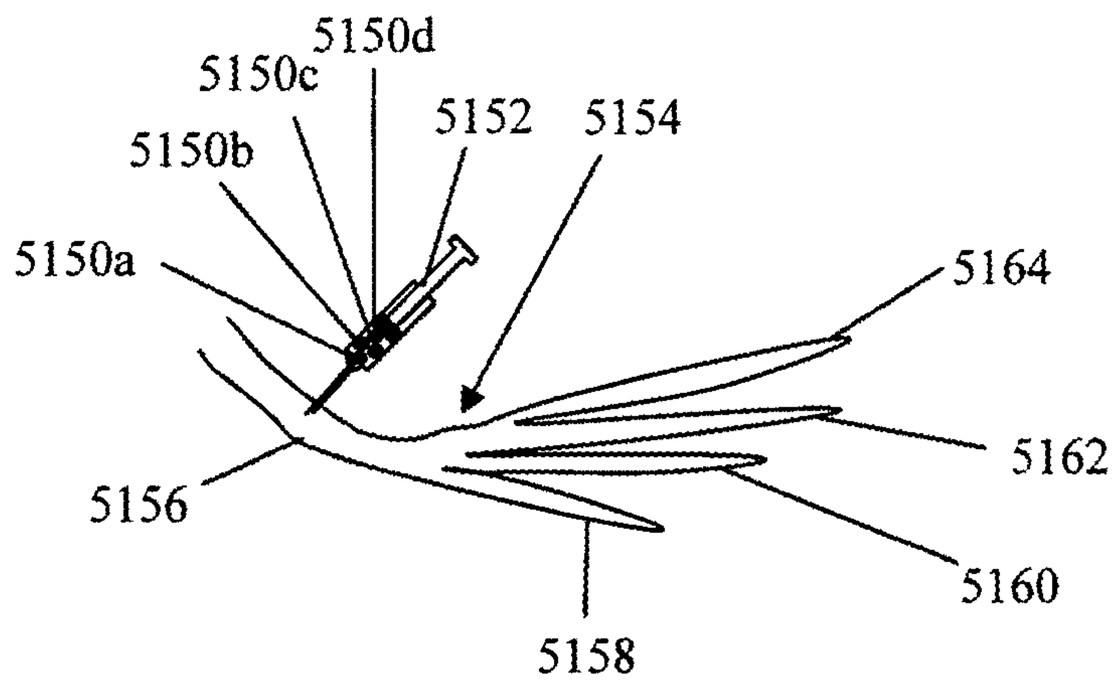

FIG. 78A

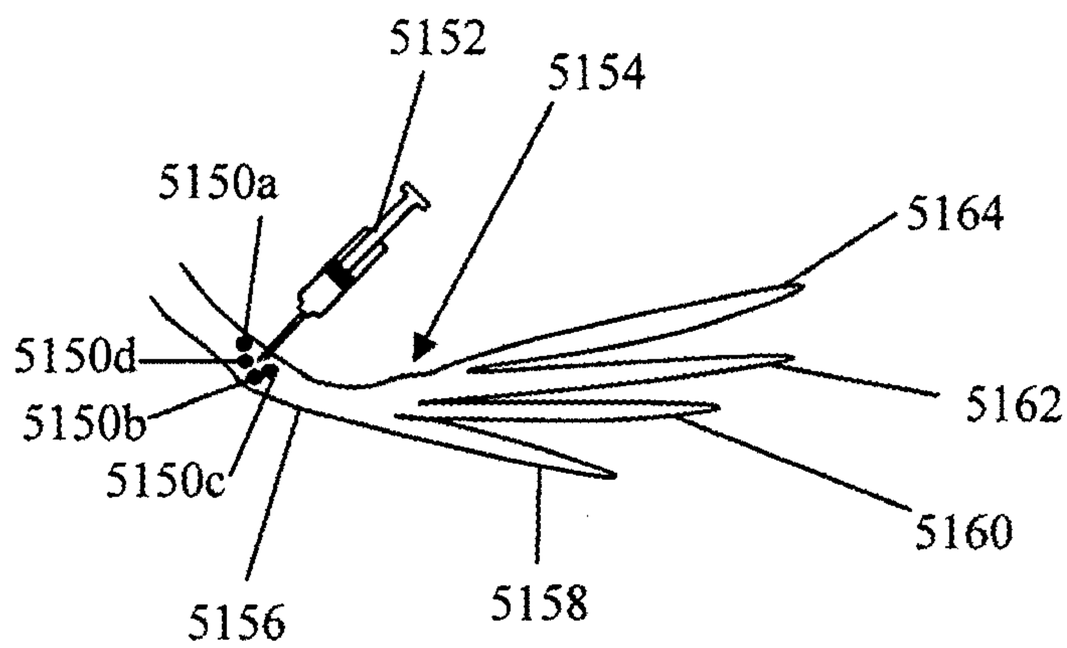

FIG. 78B

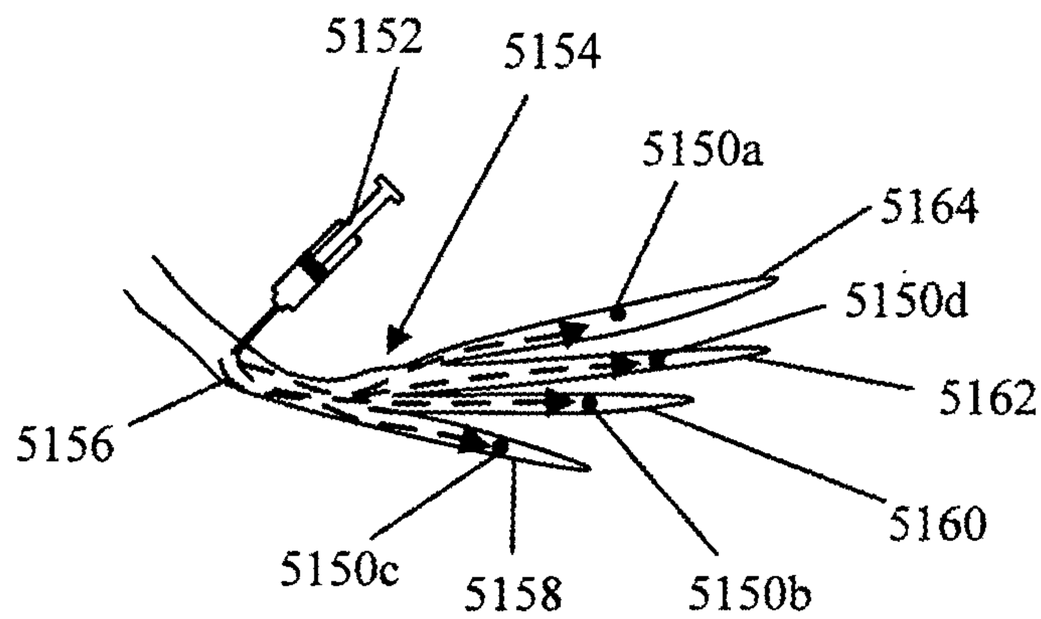

FIG. 78C

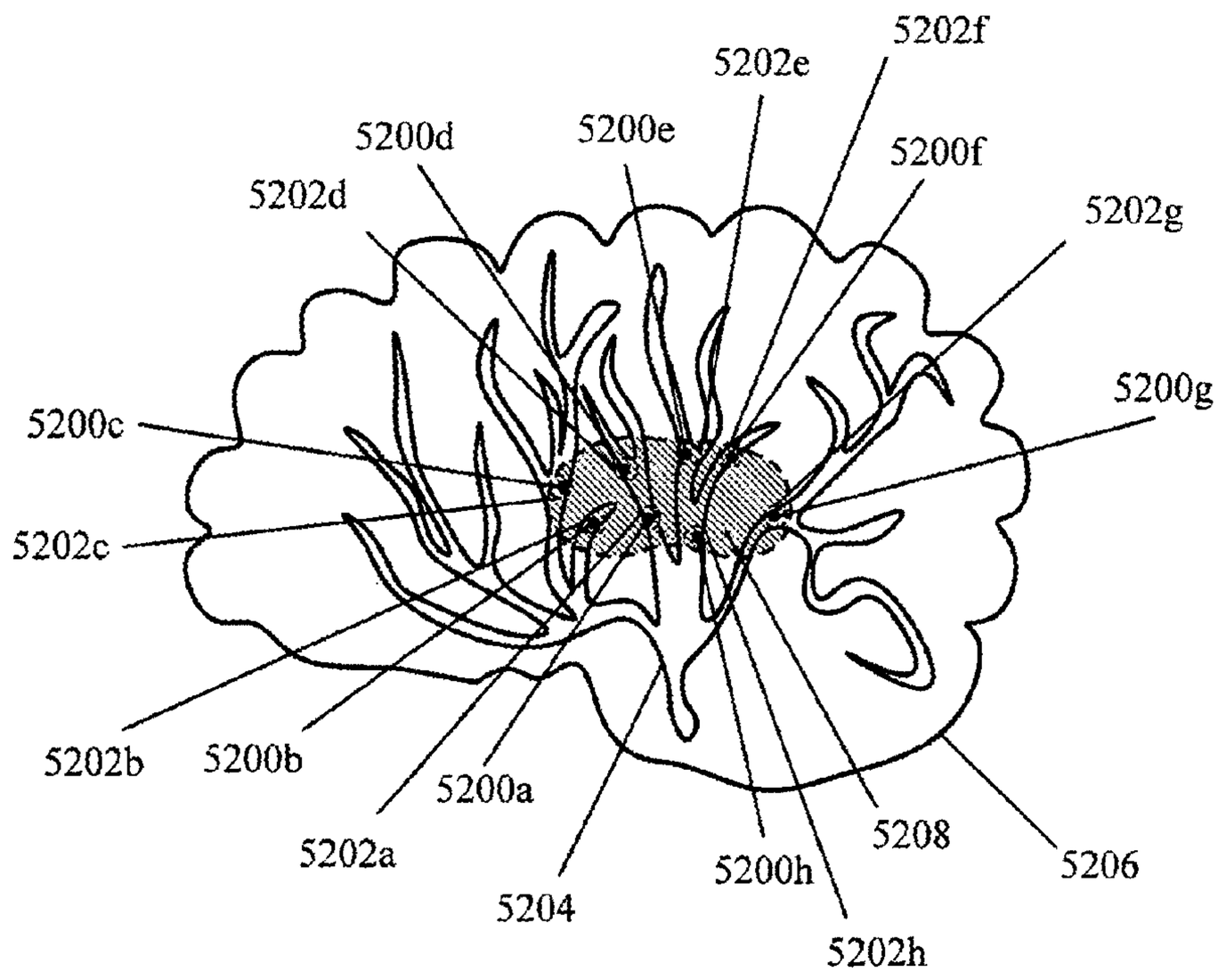
5202f
5202e
5200d
5200e
5200f
5202d
5202g
5200g
5200c
5202c
5202b
5200b
5200a
5202a
5204
5200h
5208
5206
5202h

FIG. 79

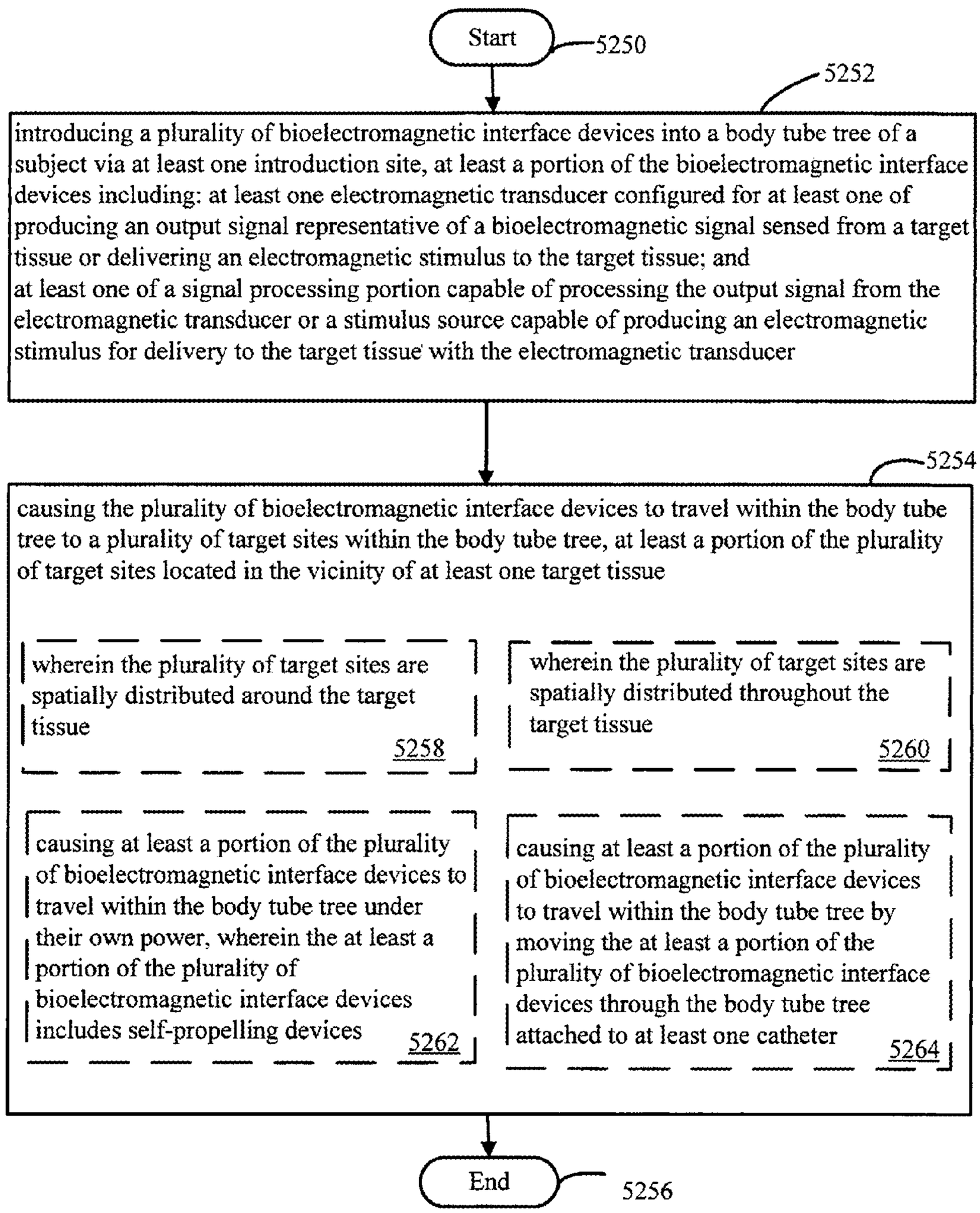
Start
5250
5252
introducing a plurality of bioelectromagnetic interface devices into a body tube tree of a subject via at least one introduction site, at least a portion of the bioelectromagnetic interface devices including: at least one electromagnetic transducer configured for at least one of producing an output signal representative of a bioelectromagnetic signal sensed from a target tissue or delivering an electromagnetic stimulus to the target tissue; and
at least one of a signal processing portion capable of processing the output signal from the electromagnetic transducer or a stimulus source capable of producing an electromagnetic stimulus for delivery to the target tissue with the electromagnetic transducer
5254
causing the plurality of bioelectromagnetic interface devices to travel within the body tube tree to a plurality of target sites within the body tube tree, at least a portion of the plurality of target sites located in the vicinity of at least one target tissue
wherein the plurality of target sites are spatially distributed around the target tissue
5258
wherein the plurality of target sites are spatially distributed throughout the target tissue
5260
causing at least a portion of the plurality of bioelectromagnetic interface devices to travel within the body tube tree under their own power, wherein the at least a portion of the plurality of bioelectromagnetic interface devices includes self-propelling devices
5262
causing at least a portion of the plurality of bioelectromagnetic interface devices to travel within the body tube tree by moving the at least a portion of the plurality of bioelectromagnetic interface devices through the body tube tree attached to at least one catheter
5264
End
5256

FIG. 80

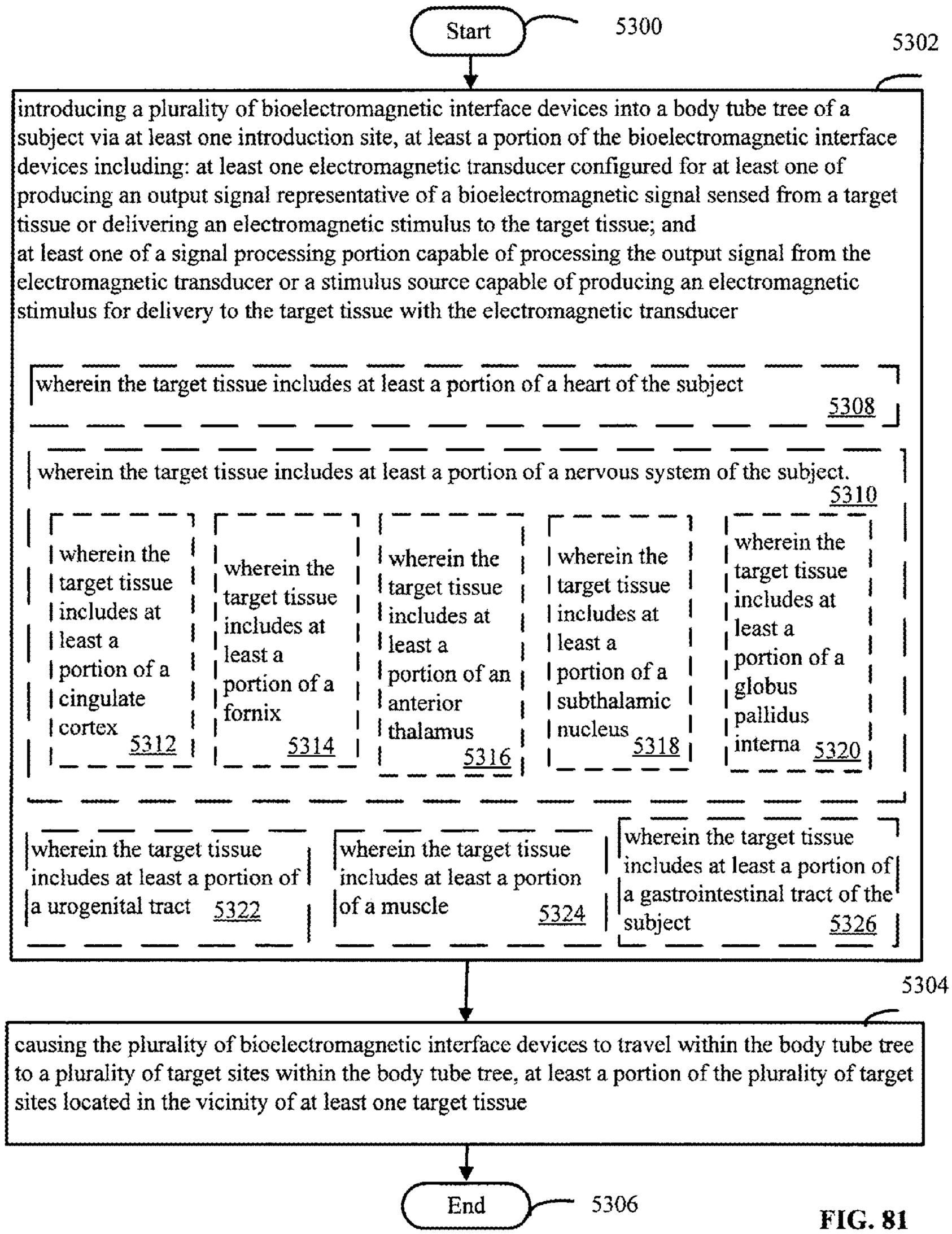
Start
5300
5302
introducing a plurality of bioelectromagnetic interface devices into a body tube tree of a subject via at least one introduction site, at least a portion of the bioelectromagnetic interface devices including: at least one electromagnetic transducer configured for at least one of producing an output signal representative of a bioelectromagnetic signal sensed from a target tissue or delivering an electromagnetic stimulus to the target tissue; and
at least one of a signal processing portion capable of processing the output signal from the electromagnetic transducer or a stimulus source capable of producing an electromagnetic stimulus for delivery to the target tissue with the electromagnetic transducer
wherein the target tissue includes at least a portion of a heart of the subject
5308
wherein the target tissue includes at least a portion of a nervous system of the subject.
5310
wherein the target tissue includes at least a portion of a cingulate cortex
5312
wherein the target tissue includes at least a portion of a fornix
5314
wherein the target tissue includes at least a portion of an anterior thalamus
5316
wherein the target tissue includes at least a portion of a subthalamic nucleus
5318
wherein the target tissue includes at least a portion of a globus pallidus interna
5320
wherein the target tissue includes at least a portion of a urogenital tract
5322
wherein the target tissue includes at least a portion of a muscle
5324
wherein the target tissue includes at least a portion of a gastrointestinal tract of the subject
5326
5304
causing the plurality of bioelectromagnetic interface devices to travel within the body tube tree to a plurality of target sites within the body tube tree, at least a portion of the plurality of target sites located in the vicinity of at least one target tissue
End
5306

FIG. 81

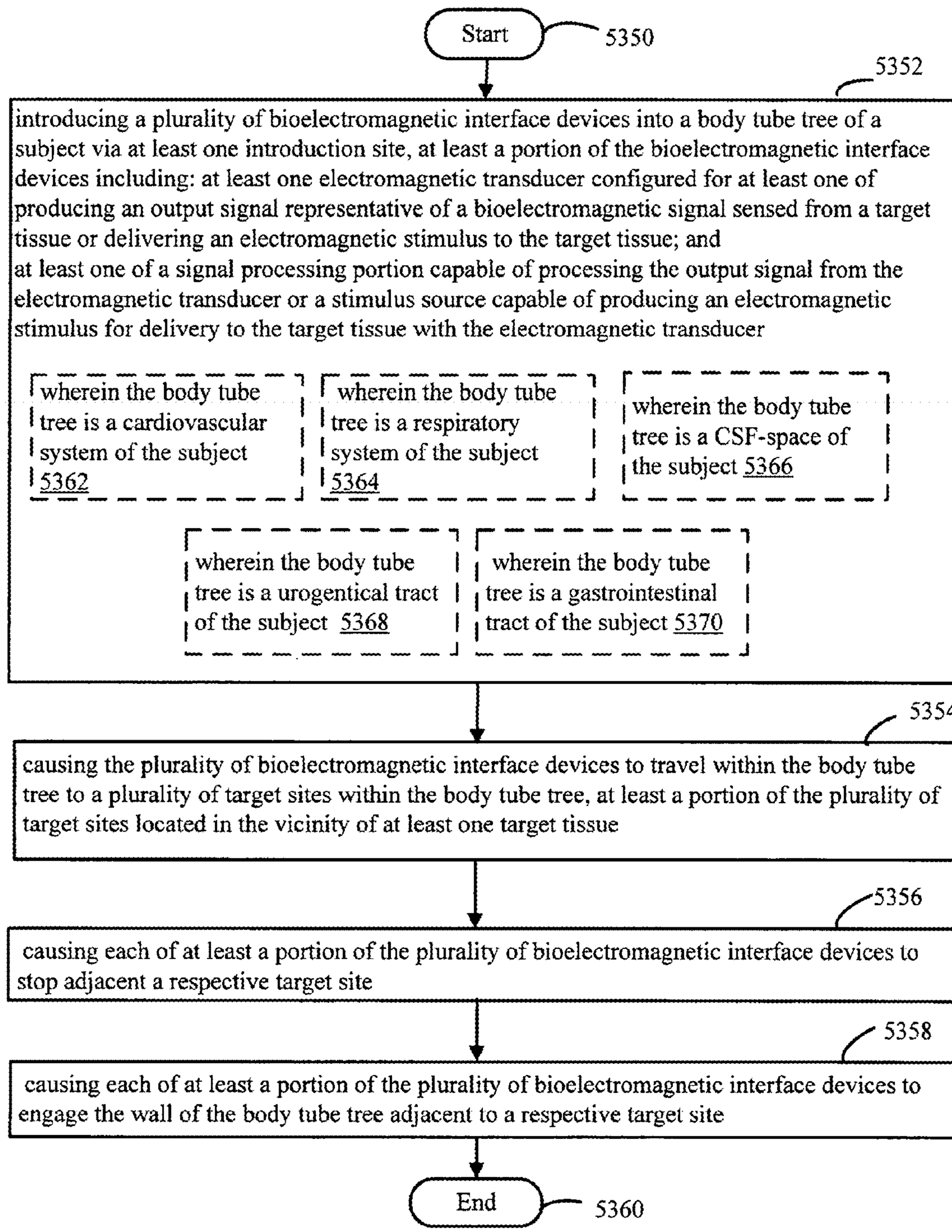
Start
5350
5352
introducing a plurality of bioelectromagnetic interface devices into a body tube tree of a subject via at least one introduction site, at least a portion of the bioelectromagnetic interface devices including: at least one electromagnetic transducer configured for at least one of producing an output signal representative of a bioelectromagnetic signal sensed from a target tissue or delivering an electromagnetic stimulus to the target tissue; and
at least one of a signal processing portion capable of processing the output signal from the electromagnetic transducer or a stimulus source capable of producing an electromagnetic stimulus for delivery to the target tissue with the electromagnetic transducer
wherein the body tube tree is a cardiovascular system of the subject 5362
wherein the body tube tree is a respiratory system of the subject 5364
wherein the body tube tree is a CSF-space of the subject 5366
wherein the body tube tree is a urogentical tract of the subject 5368
wherein the body tube tree is a gastrointestinal tract of the subject 5370
5354
causing the plurality of bioelectromagnetic interface devices to travel within the body tube tree to a plurality of target sites within the body tube tree, at least a portion of the plurality of target sites located in the vicinity of at least one target tissue
5356
causing each of at least a portion of the plurality of bioelectromagnetic interface devices to stop adjacent a respective target site
5358
causing each of at least a portion of the plurality of bioelectromagnetic interface devices to engage the wall of the body tube tree adjacent to a respective target site
End
5360

FIG. 82

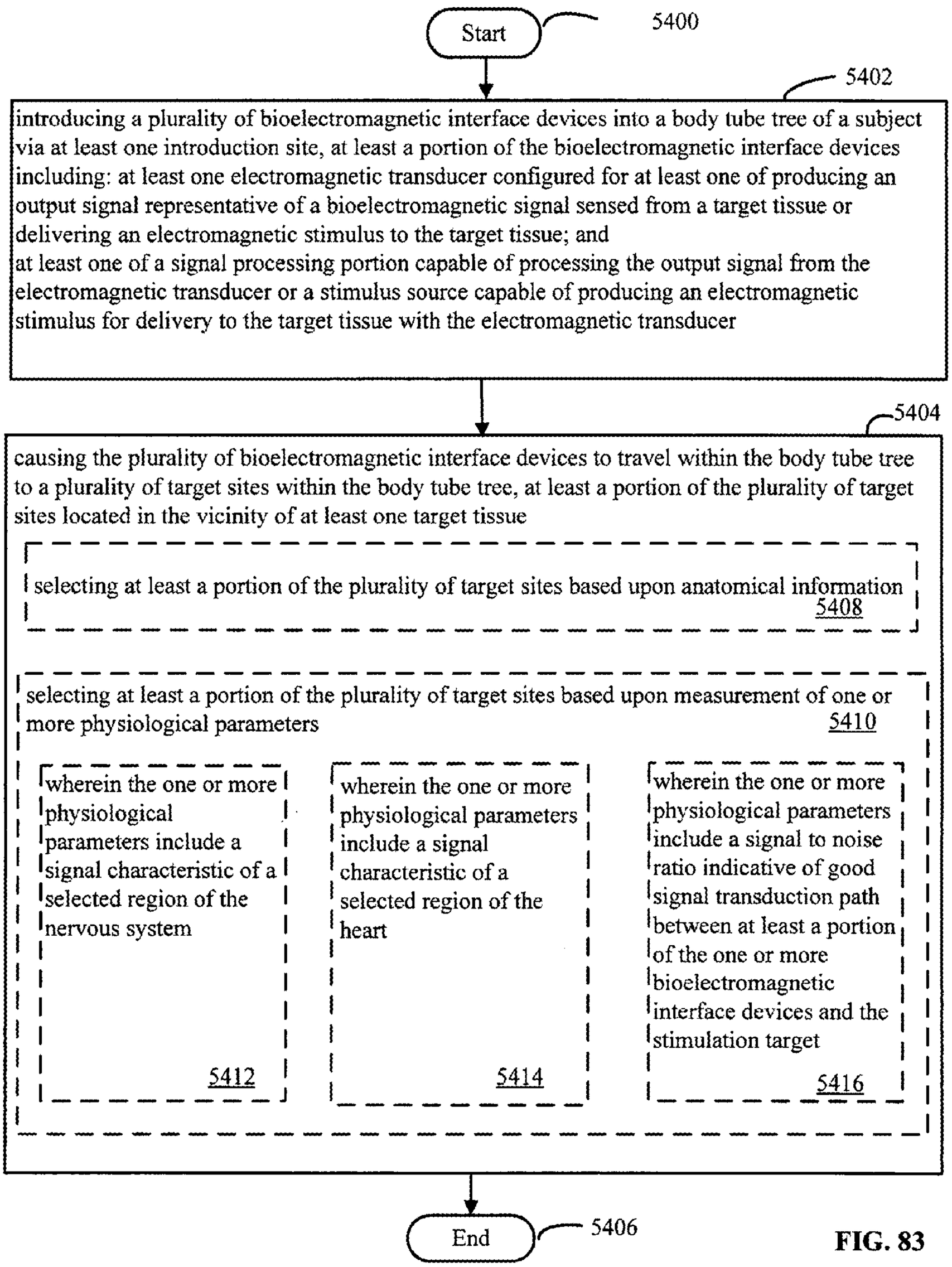
Start
5400
5402
introducing a plurality of bioelectromagnetic interface devices into a body tube tree of a subject via at least one introduction site, at least a portion of the bioelectromagnetic interface devices including: at least one electromagnetic transducer configured for at least one of producing an output signal representative of a bioelectromagnetic signal sensed from a target tissue or delivering an electromagnetic stimulus to the target tissue; and
at least one of a signal processing portion capable of processing the output signal from the electromagnetic transducer or a stimulus source capable of producing an electromagnetic stimulus for delivery to the target tissue with the electromagnetic transducer
5404
causing the plurality of bioelectromagnetic interface devices to travel within the body tube tree to a plurality of target sites within the body tube tree, at least a portion of the plurality of target sites located in the vicinity of at least one target tissue
selecting at least a portion of the plurality of target sites based upon anatomical information
5408
selecting at least a portion of the plurality of target sites based upon measurement of one or more physiological parameters
5410
wherein the one or more physiological parameters include a signal characteristic of a selected region of the nervous system
5412
wherein the one or more physiological parameters include a signal characteristic of a selected region of the heart
5414
wherein the one or more physiological parameters include a signal to noise ratio indicative of good signal transduction path between at least a portion of the one or more bioelectromagnetic interface devices and the stimulation target
5416
End
5406

FIG. 83

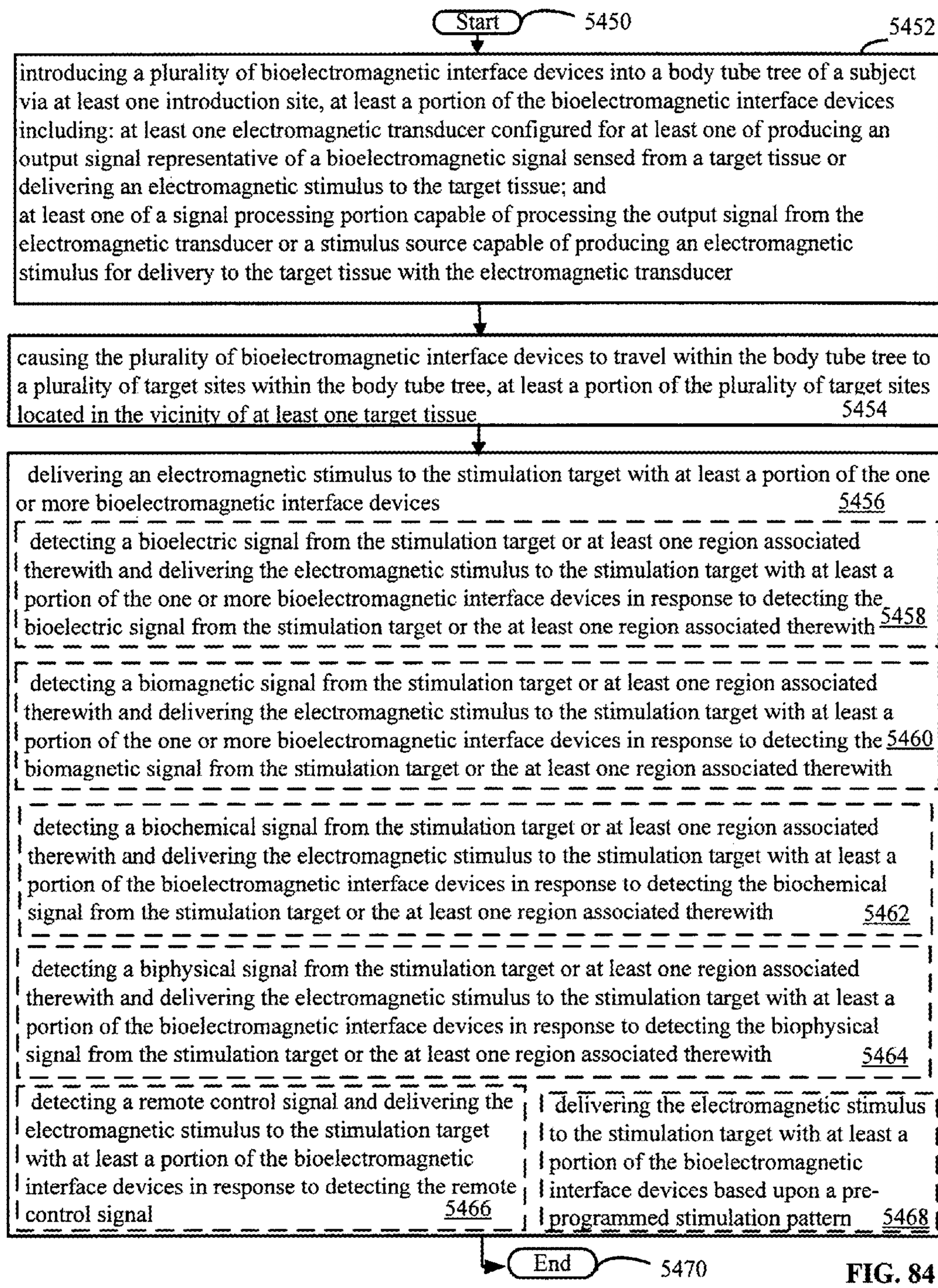
Start
5450
5452
introducing a plurality of bioelectromagnetic interface devices into a body tube tree of a subject via at least one introduction site, at least a portion of the bioelectromagnetic interface devices including: at least one electromagnetic transducer configured for at least one of producing an output signal representative of a bioelectromagnetic signal sensed from a target tissue or delivering an electromagnetic stimulus to the target tissue; and
at least one of a signal processing portion capable of processing the output signal from the electromagnetic transducer or a stimulus source capable of producing an electromagnetic stimulus for delivery to the target tissue with the electromagnetic transducer
causing the plurality of bioelectromagnetic interface devices to travel within the body tube tree to a plurality of target sites within the body tube tree, at least a portion of the plurality of target sites located in the vicinity of at least one target tissue
5454
delivering an electromagnetic stimulus to the stimulation target with at least a portion of the one or more bioelectromagnetic interface devices
5456
detecting a bioelectric signal from the stimulation target or at least one region associated therewith and delivering the electromagnetic stimulus to the stimulation target with at least a portion of the one or more bioelectromagnetic interface devices in response to detecting the bioelectric signal from the stimulation target or the at least one region associated therewith
5458
detecting a biomagnetic signal from the stimulation target or at least one region associated therewith and delivering the electromagnetic stimulus to the stimulation target with at least a portion of the one or more bioelectromagnetic interface devices in response to detecting the biomagnetic signal from the stimulation target or the at least one region associated therewith
5460
detecting a biochemical signal from the stimulation target or at least one region associated therewith and delivering the electromagnetic stimulus to the stimulation target with at least a portion of the bioelectromagnetic interface devices in response to detecting the biochemical signal from the stimulation target or the at least one region associated therewith
5462
detecting a biphysical signal from the stimulation target or at least one region associated therewith and delivering the electromagnetic stimulus to the stimulation target with at least a portion of the bioelectromagnetic interface devices in response to detecting the biophysical signal from the stimulation target or the at least one region associated therewith
5464
detecting a remote control signal and delivering the electromagnetic stimulus to the stimulation target with at least a portion of the bioelectromagnetic interface devices in response to detecting the remote control signal
5466
delivering the electromagnetic stimulus to the stimulation target with at least a portion of the bioelectromagnetic interface devices based upon a pre-programmed stimulation pattern
5468
End
5470

FIG. 84

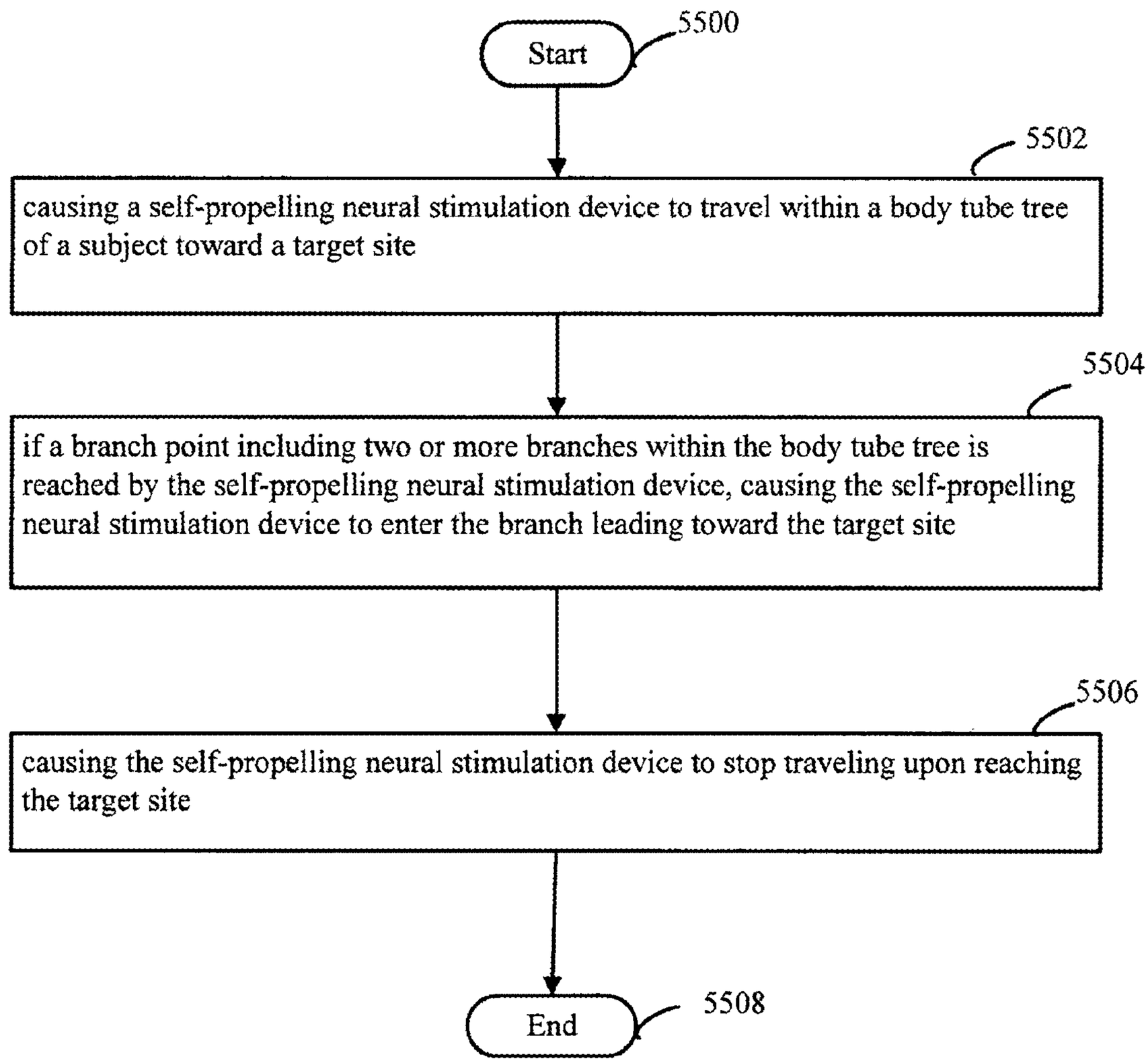
Start
5500
5502
causing a self-propelling neural stimulation device to travel within a body tube tree of a subject toward a target site
5504
if a branch point including two or more branches within the body tube tree is reached by the self-propelling neural stimulation device, causing the self-propelling neural stimulation device to enter the branch leading toward the target site
5506
causing the self-propelling neural stimulation device to stop traveling upon reaching the target site
End
5508

FIG. 85

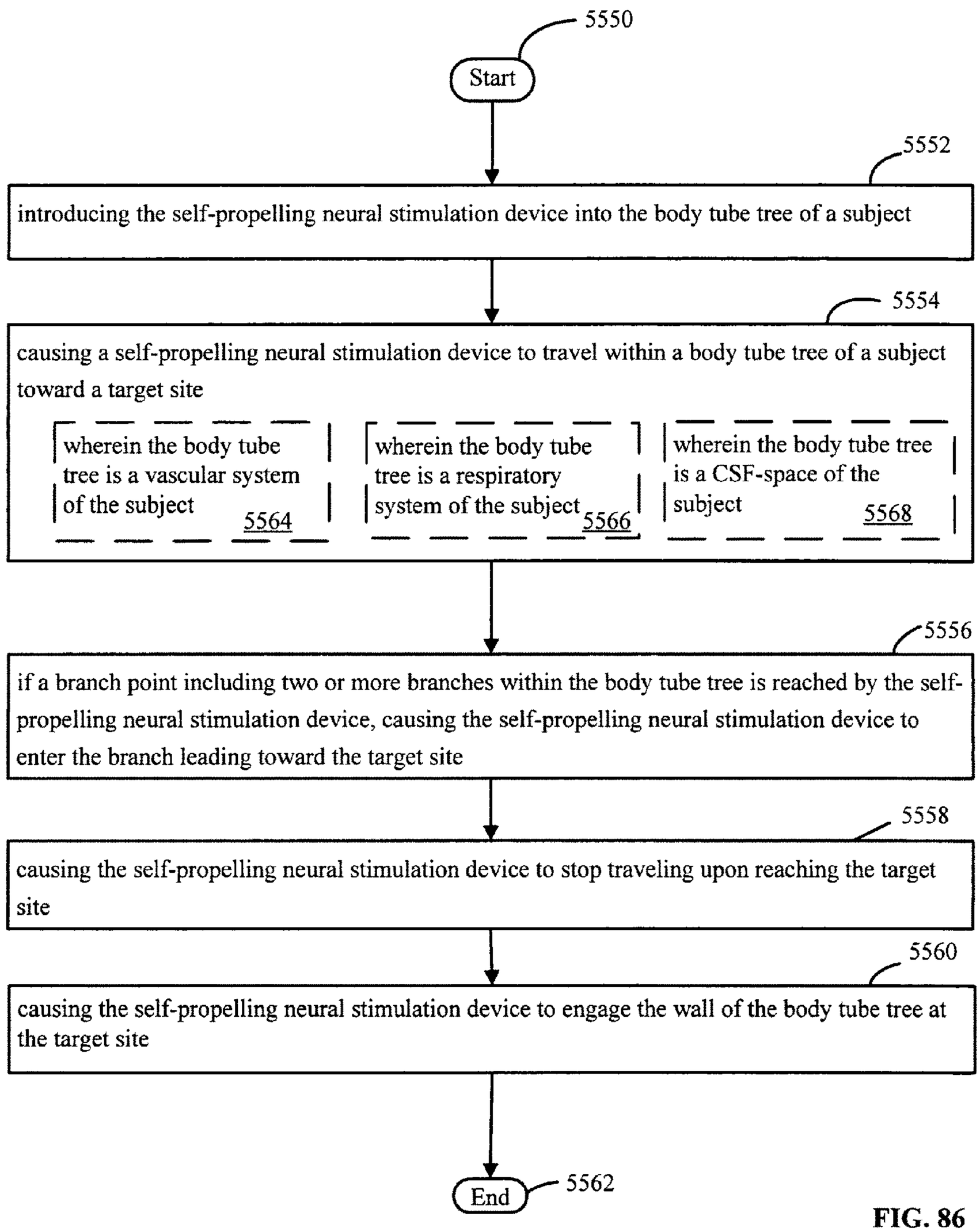
5550
Start
5552
introducing the self-propelling neural stimulation device into the body tube tree of a subject
5554
causing a self-propelling neural stimulation device to travel within a body tube tree of a subject toward a target site
wherein the body tube tree is a vascular system of the subject
5564
wherein the body tube tree is a respiratory system of the subject
5566
wherein the body tube tree is a CSF-space of the subject
5568
5556
if a branch point including two or more branches within the body tube tree is reached by the self-propelling neural stimulation device, causing the self-propelling neural stimulation device to enter the branch leading toward the target site
5558
causing the self-propelling neural stimulation device to stop traveling upon reaching the target site
5560
causing the self-propelling neural stimulation device to engage the wall of the body tube tree at the target site
End
5562

FIG. 86

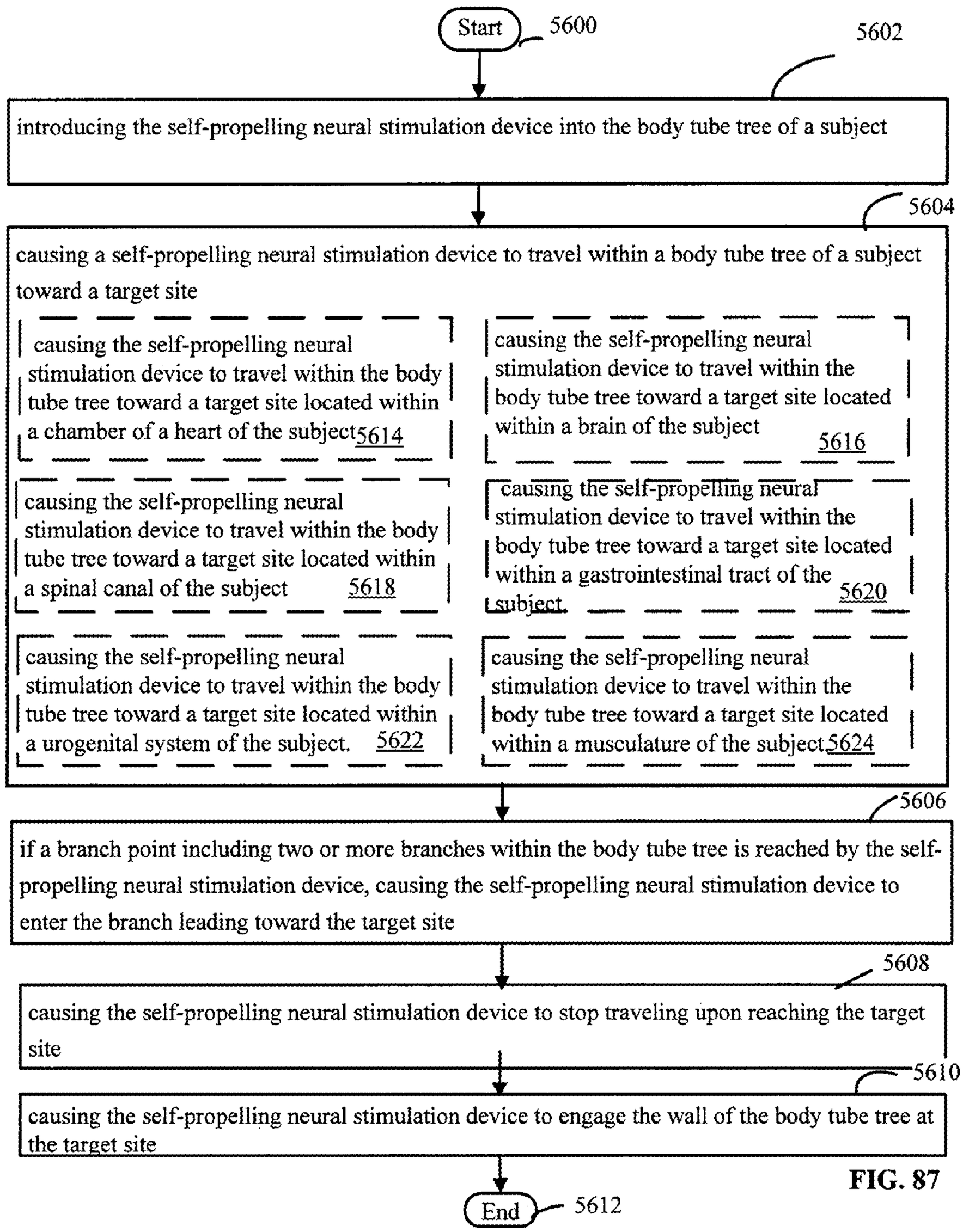
Start
5600
5602
introducing the self-propelling neural stimulation device into the body tube tree of a subject
5604
causing a self-propelling neural stimulation device to travel within a body tube tree of a subject toward a target site
causing the self-propelling neural stimulation device to travel within the body tube tree toward a target site located within a chamber of a heart of the subject 5614
causing the self-propelling neural stimulation device to travel within the body tube tree toward a target site located within a brain of the subject 5616
causing the self-propelling neural stimulation device to travel within the body tube tree toward a target site located within a spinal canal of the subject 5618
causing the self-propelling neural stimulation device to travel within the body tube tree toward a target site located within a gastrointestinal tract of the subject. 5620
causing the self-propelling neural stimulation device to travel within the body tube tree toward a target site located within a urogenital system of the subject. 5622
causing the self-propelling neural stimulation device to travel within the body tube tree toward a target site located within a musculature of the subject 5624
5606
if a branch point including two or more branches within the body tube tree is reached by the self-propelling neural stimulation device, causing the self-propelling neural stimulation device to enter the branch leading toward the target site
5608
causing the self-propelling neural stimulation device to stop traveling upon reaching the target site
5610
causing the self-propelling neural stimulation device to engage the wall of the body tube tree at the target site
End
5612

FIG. 87

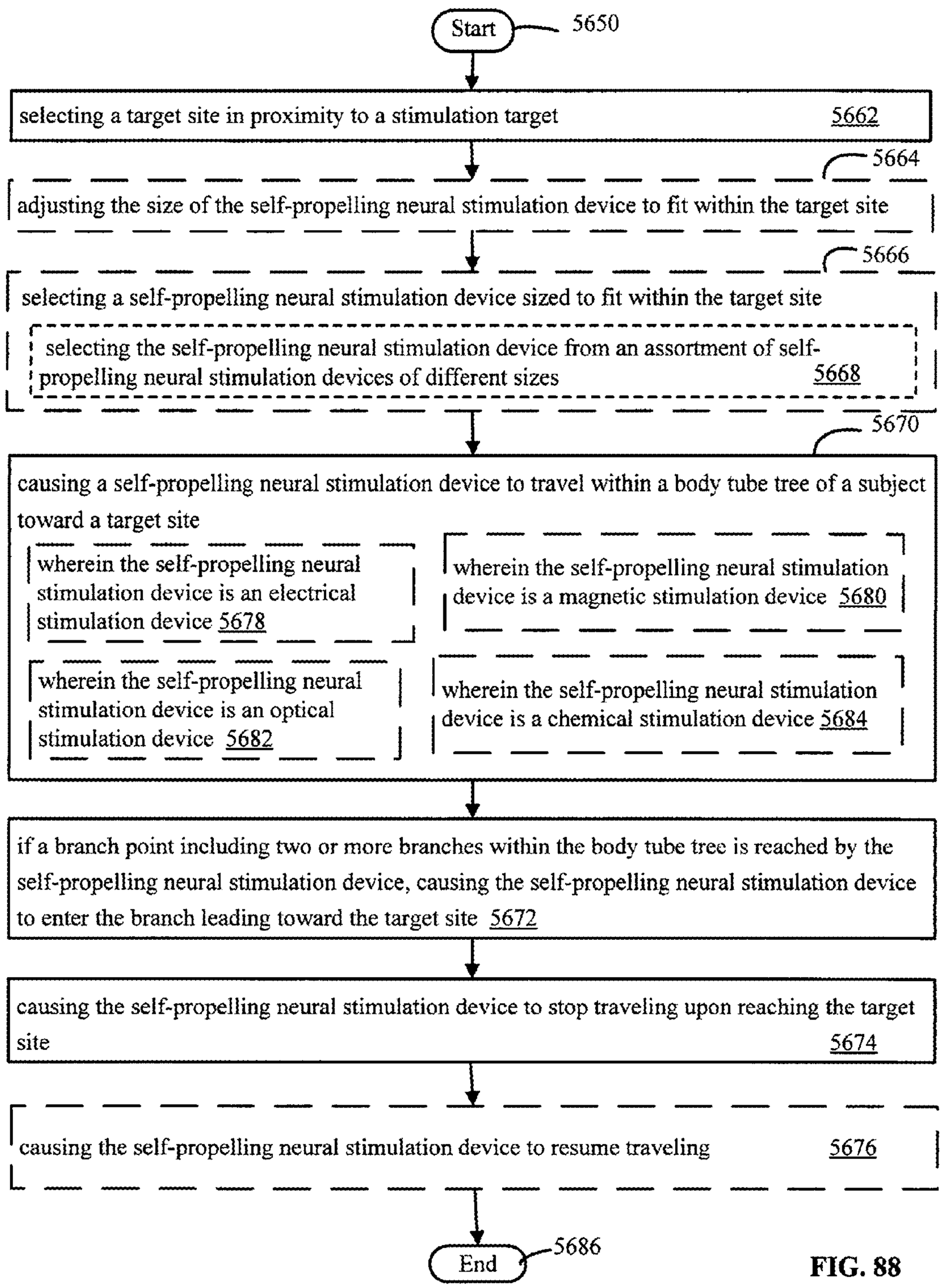
Start
5650
selecting a target site in proximity to a stimulation target 5662
5664
adjusting the size of the self-propelling neural stimulation device to fit within the target site
5666
selecting a self-propelling neural stimulation device sized to fit within the target site
selecting the self-propelling neural stimulation device from an assortment of self-propelling neural stimulation devices of different sizes 5668
5670
causing a self-propelling neural stimulation device to travel within a body tube tree of a subject toward a target site
wherein the self-propelling neural stimulation device is an electrical stimulation device 5678
wherein the self-propelling neural stimulation device is a magnetic stimulation device 5680
wherein the self-propelling neural stimulation device is an optical stimulation device 5682
wherein the self-propelling neural stimulation device is a chemical stimulation device 5684
if a branch point including two or more branches within the body tube tree is reached by the self-propelling neural stimulation device, causing the self-propelling neural stimulation device to enter the branch leading toward the target site 5672
causing the self-propelling neural stimulation device to stop traveling upon reaching the target site 5674
causing the self-propelling neural stimulation device to resume traveling 5676
End
5686

FIG. 88

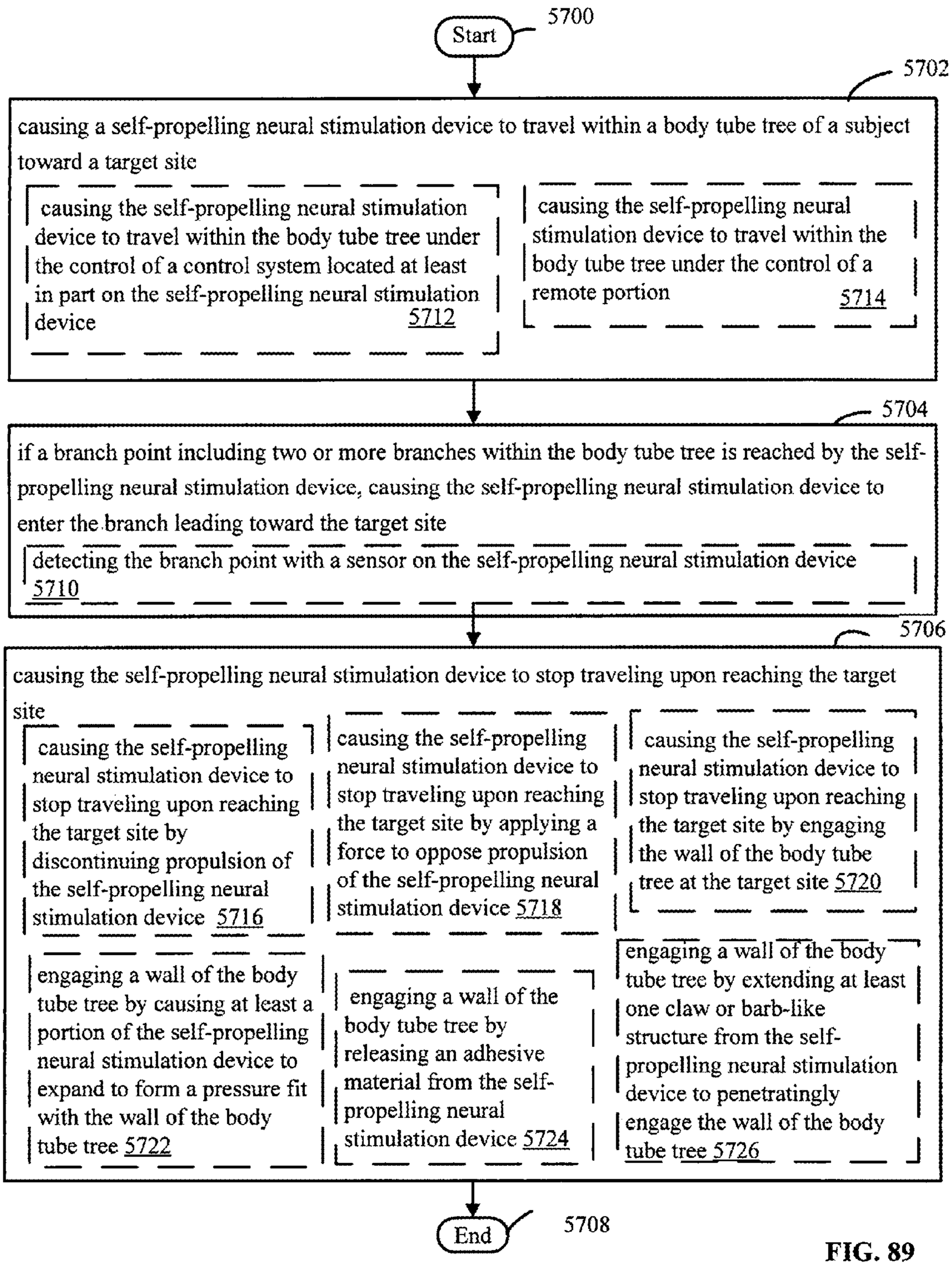
Start
5700
5702
causing a self-propelling neural stimulation device to travel within a body tube tree of a subject toward a target site
causing the self-propelling neural stimulation device to travel within the body tube tree under the control of a control system located at least in part on the self-propelling neural stimulation device 5712
causing the self-propelling neural stimulation device to travel within the body tube tree under the control of a remote portion 5714
5704
if a branch point including two or more branches within the body tube tree is reached by the self-propelling neural stimulation device, causing the self-propelling neural stimulation device to enter the branch leading toward the target site
detecting the branch point with a sensor on the self-propelling neural stimulation device 5710
5706
causing the self-propelling neural stimulation device to stop traveling upon reaching the target site
causing the self-propelling neural stimulation device to stop traveling upon reaching the target site by discontinuing propulsion of the self-propelling neural stimulation device 5716
causing the self-propelling neural stimulation device to stop traveling upon reaching the target site by applying a force to oppose propulsion of the self-propelling neural stimulation device 5718
causing the self-propelling neural stimulation device to stop traveling upon reaching the target site by engaging the wall of the body tube tree at the target site 5720
engaging a wall of the body tube tree by causing at least a portion of the self-propelling neural stimulation device to expand to form a pressure fit with the wall of the body tube tree 5722
engaging a wall of the body tube tree by releasing an adhesive material from the self-propelling neural stimulation device 5724
engaging a wall of the body tube tree by extending at least one claw or barb-like structure from the self-propelling neural stimulation device to penetratingly engage the wall of the body tube tree 5726
End
5708

FIG. 89

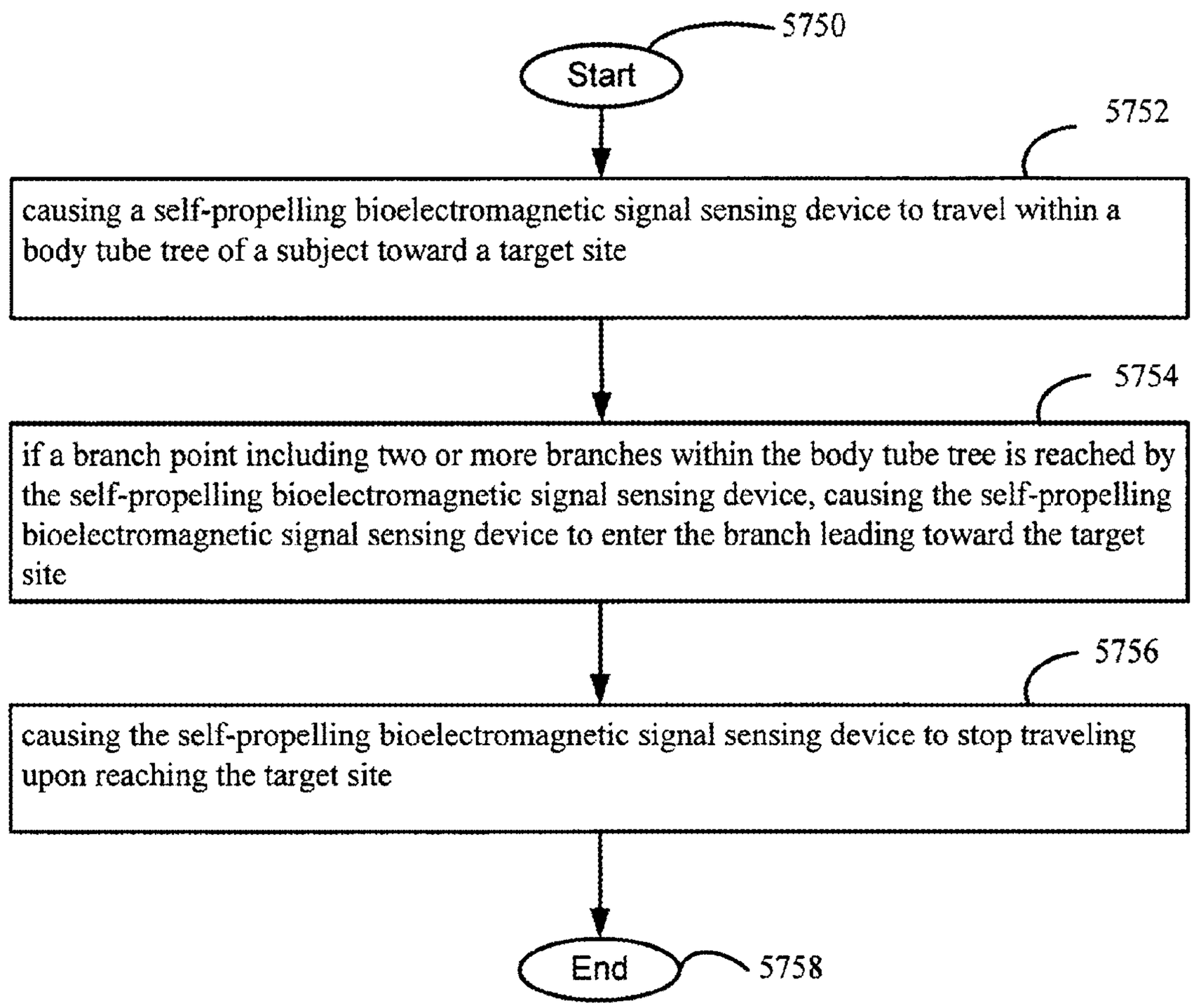
5750
Start
5752
causing a self-propelling bioelectromagnetic signal sensing device to travel within a body tube tree of a subject toward a target site
5754
if a branch point including two or more branches within the body tube tree is reached by the self-propelling bioelectromagnetic signal sensing device, causing the self-propelling bioelectromagnetic signal sensing device to enter the branch leading toward the target site
5756
causing the self-propelling bioelectromagnetic signal sensing device to stop traveling upon reaching the target site
End
5758

FIG. 90

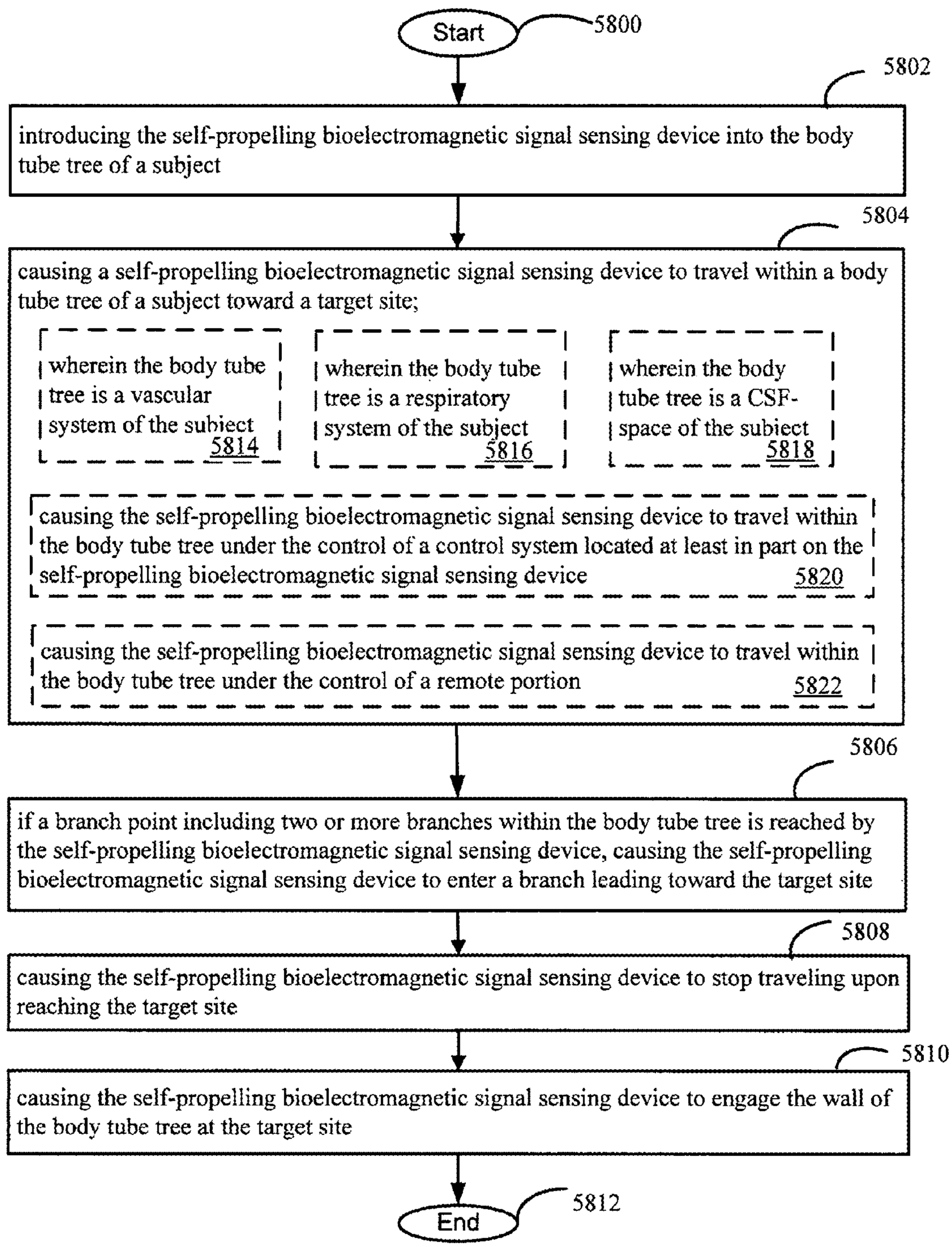
Start
5800
5802
introducing the self-propelling bioelectromagnetic signal sensing device into the body tube tree of a subject
5804
causing a self-propelling bioelectromagnetic signal sensing device to travel within a body tube tree of a subject toward a target site;
wherein the body tube tree is a vascular system of the subject 5814
wherein the body tube tree is a respiratory system of the subject 5816
wherein the body tube tree is a CSF-space of the subject 5818
causing the self-propelling bioelectromagnetic signal sensing device to travel within the body tube tree under the control of a control system located at least in part on the self-propelling bioelectromagnetic signal sensing device 5820
causing the self-propelling bioelectromagnetic signal sensing device to travel within the body tube tree under the control of a remote portion 5822
5806
if a branch point including two or more branches within the body tube tree is reached by the self-propelling bioelectromagnetic signal sensing device, causing the self-propelling bioelectromagnetic signal sensing device to enter a branch leading toward the target site
5808
causing the self-propelling bioelectromagnetic signal sensing device to stop traveling upon reaching the target site
5810
causing the self-propelling bioelectromagnetic signal sensing device to engage the wall of the body tube tree at the target site
End
5812

FIG. 91

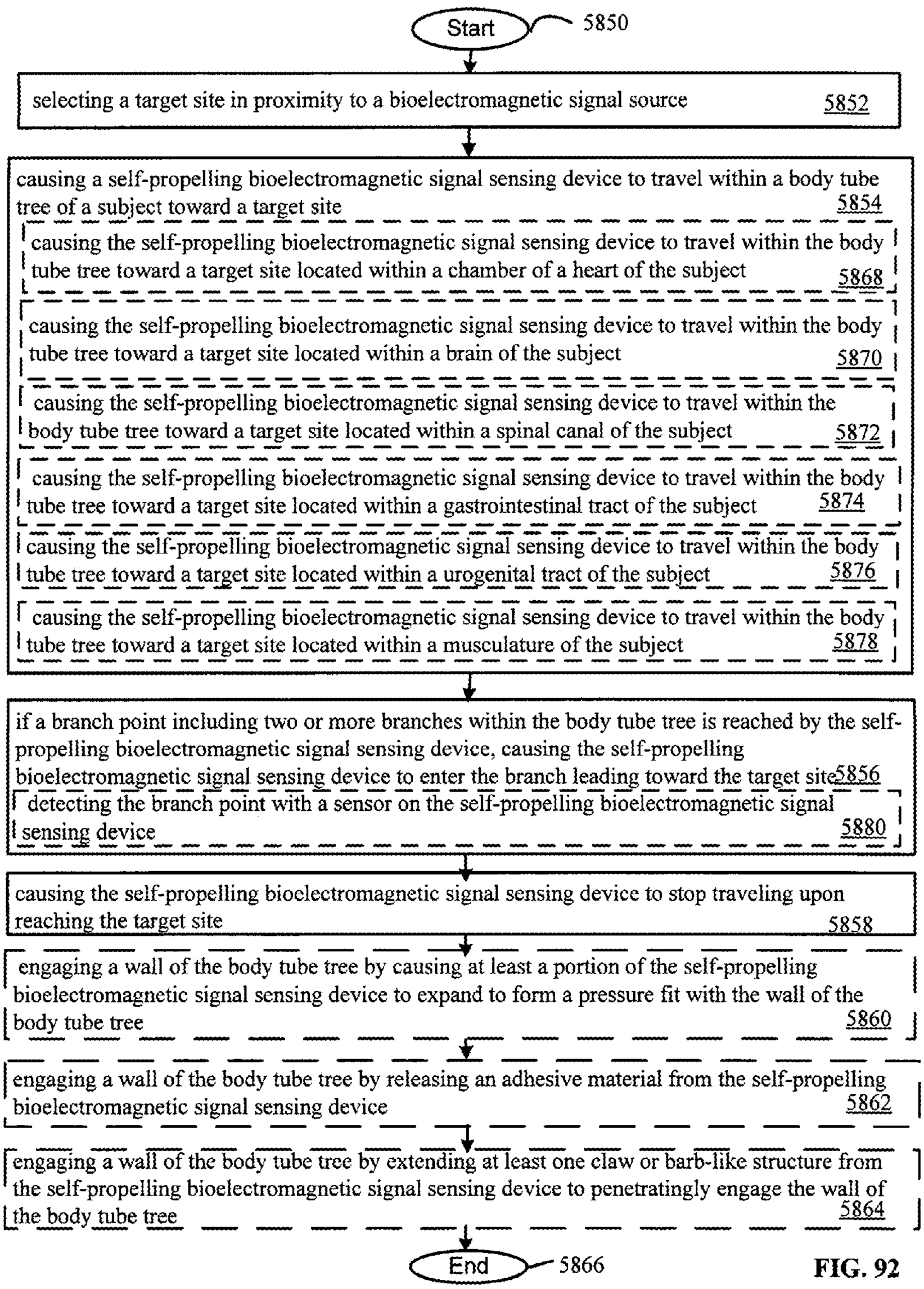
Start
5850
selecting a target site in proximity to a bioelectromagnetic signal source 5852
causing a self-propelling bioelectromagnetic signal sensing device to travel within a body tube tree of a subject toward a target site 5854
causing the self-propelling bioelectromagnetic signal sensing device to travel within the body tube tree toward a target site located within a chamber of a heart of the subject 5868
causing the self-propelling bioelectromagnetic signal sensing device to travel within the body tube tree toward a target site located within a brain of the subject 5870
causing the self-propelling bioelectromagnetic signal sensing device to travel within the body tube tree toward a target site located within a spinal canal of the subject 5872
causing the self-propelling bioelectromagnetic signal sensing device to travel within the body tube tree toward a target site located within a gastrointestinal tract of the subject 5874
causing the self-propelling bioelectromagnetic signal sensing device to travel within the body tube tree toward a target site located within a urogenital tract of the subject 5876
causing the self-propelling bioelectromagnetic signal sensing device to travel within the body tube tree toward a target site located within a musculature of the subject 5878
if a branch point including two or more branches within the body tube tree is reached by the self-propelling bioelectromagnetic signal sensing device, causing the self-propelling bioelectromagnetic signal sensing device to enter the branch leading toward the target site 5856
detecting the branch point with a sensor on the self-propelling bioelectromagnetic signal sensing device 5880
causing the self-propelling bioelectromagnetic signal sensing device to stop traveling upon reaching the target site 5858
engaging a wall of the body tube tree by causing at least a portion of the self-propelling bioelectromagnetic signal sensing device to expand to form a pressure fit with the wall of the body tube tree 5860
engaging a wall of the body tube tree by releasing an adhesive material from the self-propelling bioelectromagnetic signal sensing device 5862
engaging a wall of the body tube tree by extending at least one claw or barb-like structure from the self-propelling bioelectromagnetic signal sensing device to penetratingly engage the wall of the body tube tree 5864
End
5866

FIG. 92

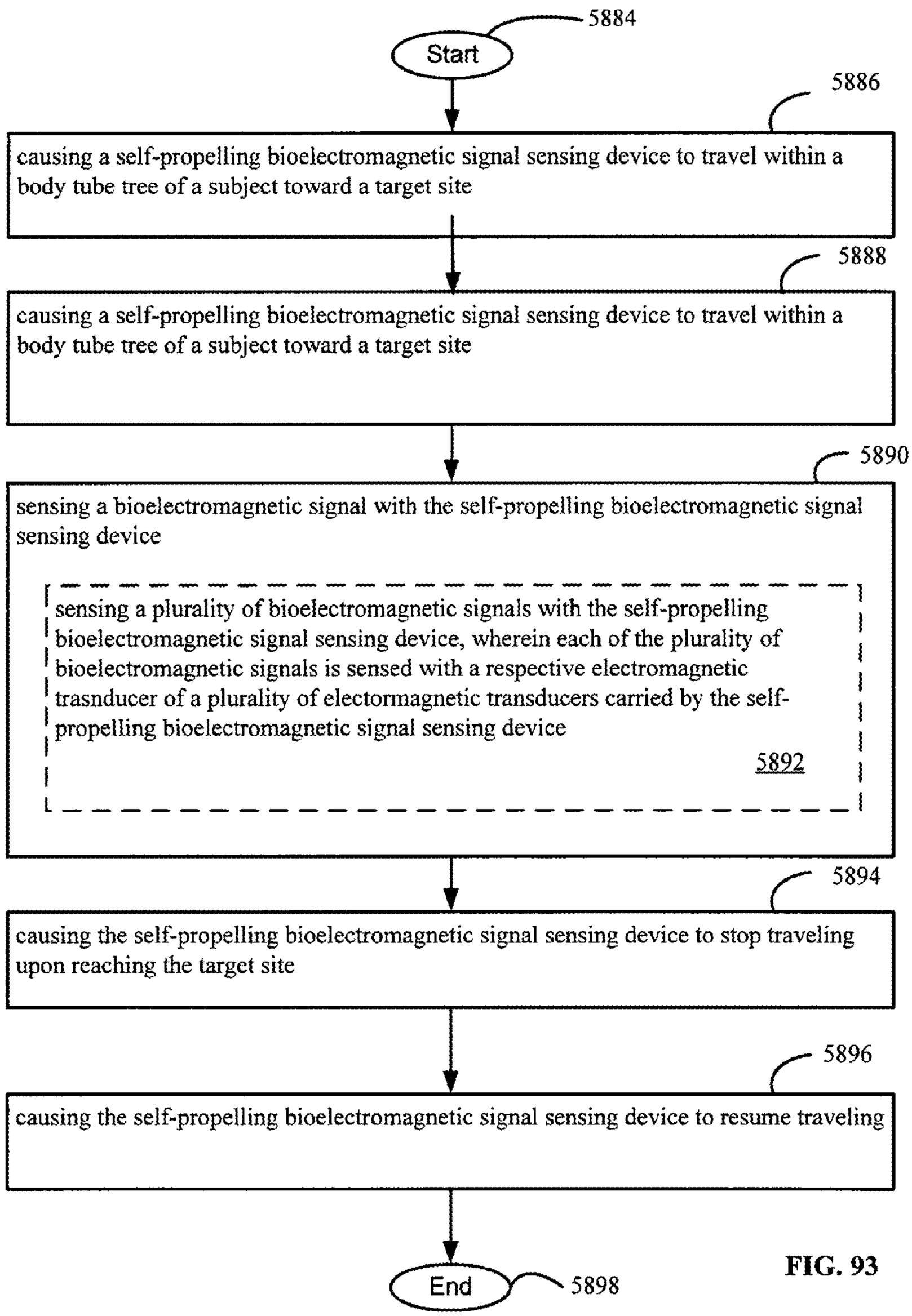
5884
Start
5886
causing a self-propelling bioelectromagnetic signal sensing device to travel within a body tube tree of a subject toward a target site
5888
causing a self-propelling bioelectromagnetic signal sensing device to travel within a body tube tree of a subject toward a target site
5890
sensing a bioelectromagnetic signal with the self-propelling bioelectromagnetic signal sensing device
sensing a plurality of bioelectromagnetic signals with the self-propelling bioelectromagnetic signal sensing device, wherein each of the plurality of bioelectromagnetic signals is sensed with a respective electromagnetic trasnducer of a plurality of electormagnetic transducers carried by the self-propelling bioelectromagnetic signal sensing device
5892
5894
causing the self-propelling bioelectromagnetic signal sensing device to stop traveling upon reaching the target site
5896
causing the self-propelling bioelectromagnetic signal sensing device to resume traveling
End
5898

FIG. 93

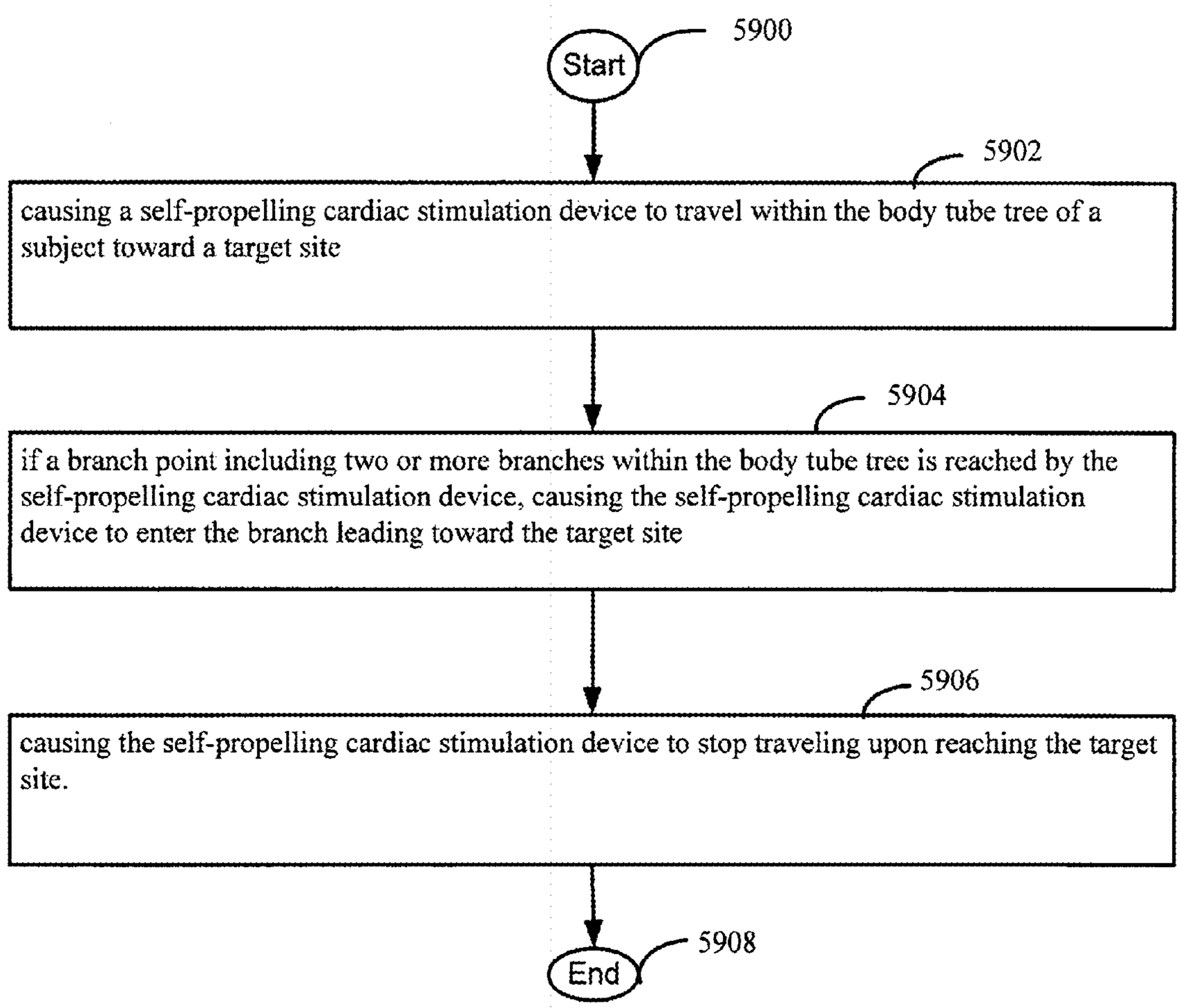
5900
Start
5902
causing a self-propelling cardiac stimulation device to travel within the body tube tree of a subject toward a target site
5904
if a branch point including two or more branches within the body tube tree is reached by the self-propelling cardiac stimulation device, causing the self-propelling cardiac stimulation device to enter the branch leading toward the target site
5906
causing the self-propelling cardiac stimulation device to stop traveling upon reaching the target site.
5908
End

FIG. 94

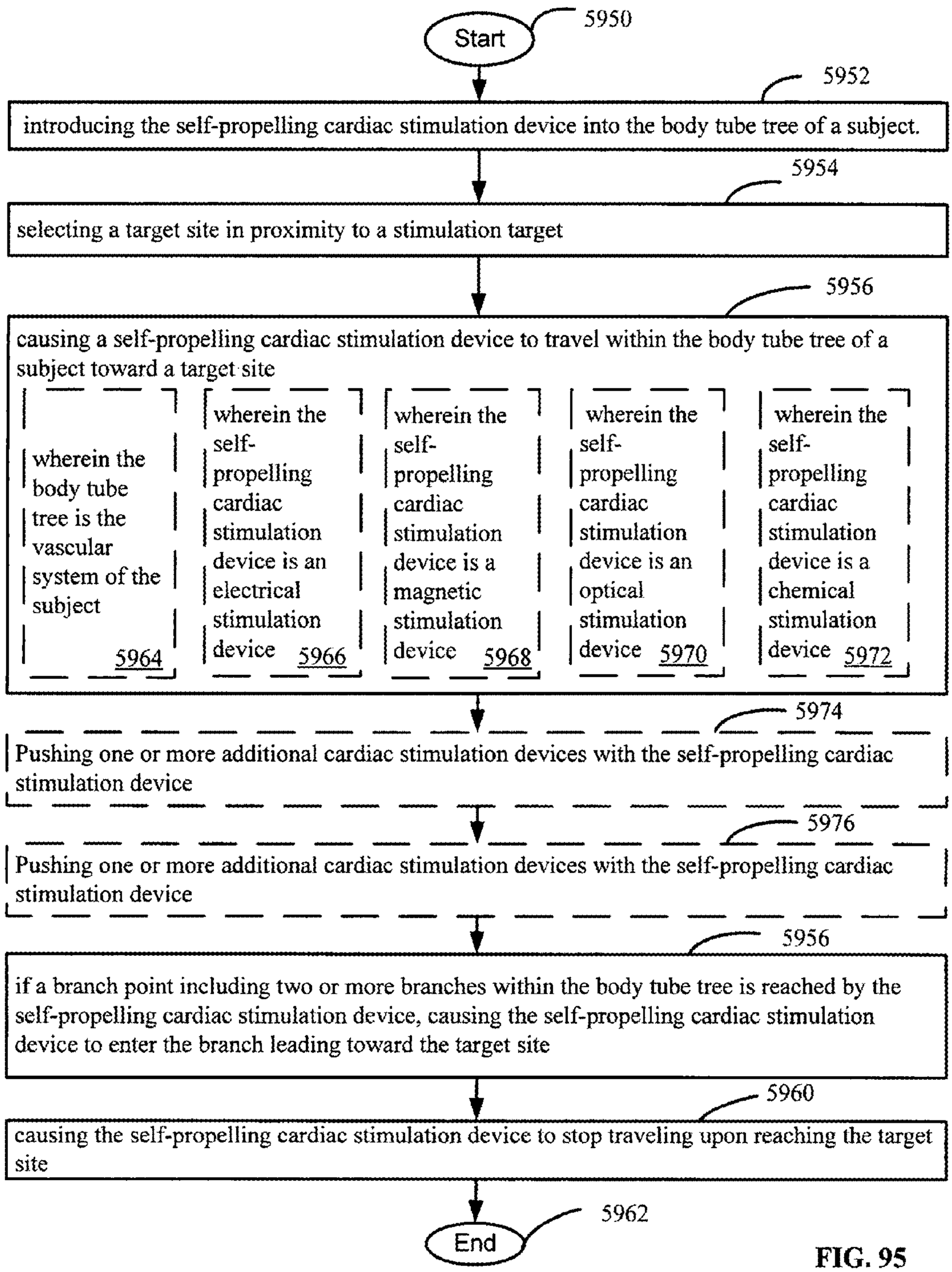
Start
5950
5952
introducing the self-propelling cardiac stimulation device into the body tube tree of a subject.
5954
selecting a target site in proximity to a stimulation target
5956
causing a self-propelling cardiac stimulation device to travel within the body tube tree of a subject toward a target site
wherein the body tube tree is the vascular system of the subject 5964
wherein the self-propelling cardiac stimulation device is an electrical stimulation device 5966
wherein the self-propelling cardiac stimulation device is a magnetic stimulation device 5968
wherein the self-propelling cardiac stimulation device is an optical stimulation device 5970
wherein the self-propelling cardiac stimulation device is a chemical stimulation device 5972
5974
Pushing one or more additional cardiac stimulation devices with the self-propelling cardiac stimulation device
5976
Pushing one or more additional cardiac stimulation devices with the self-propelling cardiac stimulation device
5956
if a branch point including two or more branches within the body tube tree is reached by the self-propelling cardiac stimulation device, causing the self-propelling cardiac stimulation device to enter the branch leading toward the target site
5960
causing the self-propelling cardiac stimulation device to stop traveling upon reaching the target site
5962
End

FIG. 95

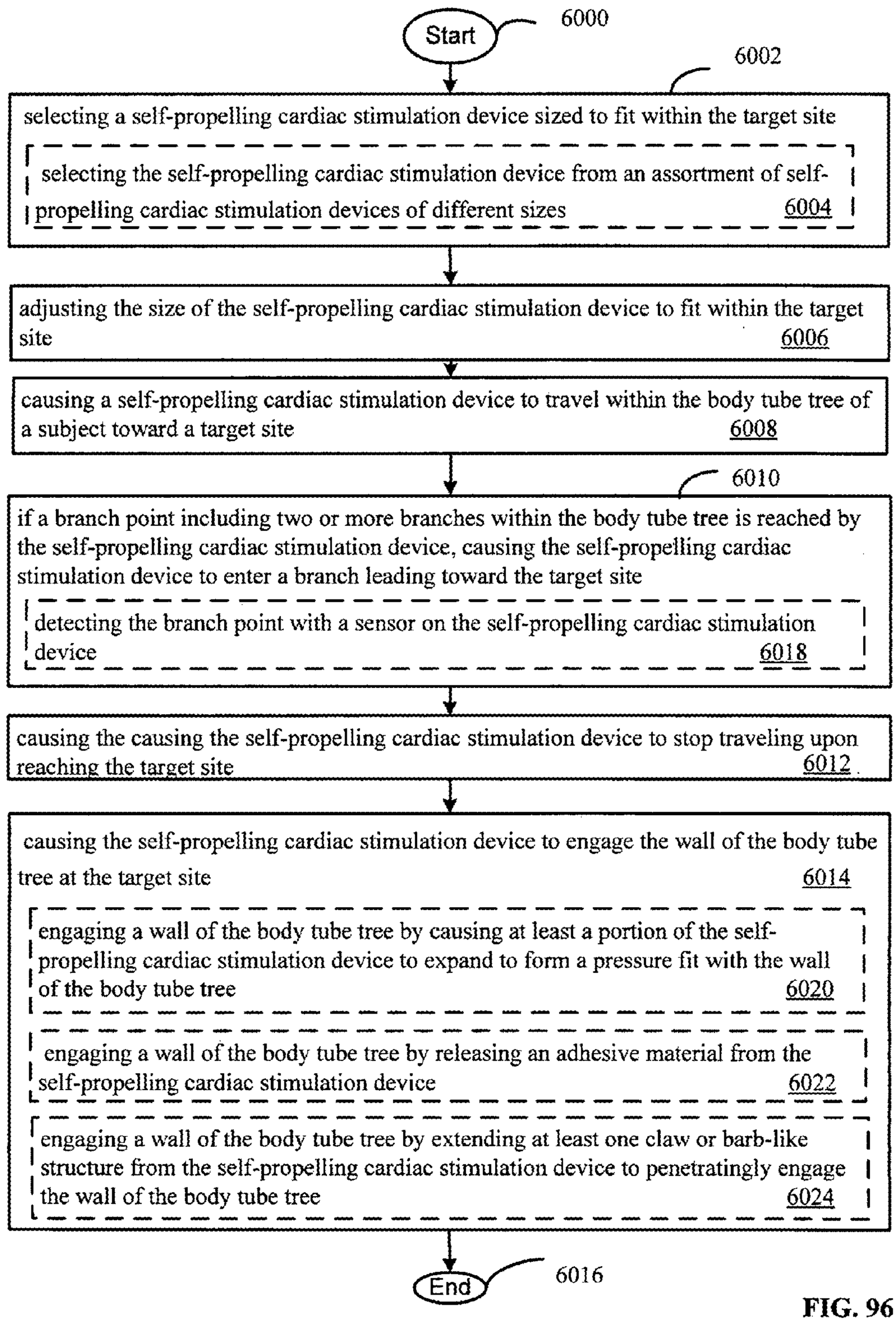
Start
6000
6002
selecting a self-propelling cardiac stimulation device sized to fit within the target site
selecting the self-propelling cardiac stimulation device from an assortment of self-propelling cardiac stimulation devices of different sizes 6004
adjusting the size of the self-propelling cardiac stimulation device to fit within the target site 6006
causing a self-propelling cardiac stimulation device to travel within the body tube tree of a subject toward a target site 6008
6010
if a branch point including two or more branches within the body tube tree is reached by the self-propelling cardiac stimulation device, causing the self-propelling cardiac stimulation device to enter a branch leading toward the target site
detecting the branch point with a sensor on the self-propelling cardiac stimulation device 6018
causing the causing the self-propelling cardiac stimulation device to stop traveling upon reaching the target site 6012
causing the self-propelling cardiac stimulation device to engage the wall of the body tube tree at the target site 6014
engaging a wall of the body tube tree by causing at least a portion of the self-propelling cardiac stimulation device to expand to form a pressure fit with the wall of the body tube tree 6020
engaging a wall of the body tube tree by releasing an adhesive material from the self-propelling cardiac stimulation device 6022
engaging a wall of the body tube tree by extending at least one claw or barb-like structure from the self-propelling cardiac stimulation device to penetratingly engage the wall of the body tube tree 6024
End
6016

FIG. 96

LUMEN-TRAVELING BIOLOGICAL INTERFACE DEVICE

CROSS-REFERENCE TO RELATED APPLICATIONS

The present application is related to and claims the benefit of the earliest available effective filing date(s) from the following listed application(s) (the "Related Applications") (e.g., claims earliest available priority dates for other than provisional patent applications or claims benefits under 35 USC §119(e) for provisional patent applications, for any and all parent, grandparent, great-grandparent, etc. applications of the Related Application(s)).

RELATED APPLICATIONS

For purposes of the USPTO extra-statutory requirements, the present application constitutes a continuation-in-part of U.S. patent application Ser. No. 10/949,186, entitled A CILIATED STENT-LIKE SYSTEM, naming Richa Wilson, Victoria Y. H. Wood, W. Daniel Hillis, Clarence T. Tegreene, Muriel Y. Ishikawa, and Lowell L. Wood, Jr. as inventors, filed 24 Sep. 2004 now U.S. Pat. No. 8,092,549, or is an application of which a currently co-pending application is entitled to the benefit of the filing date.

For purposes of the USPTO extra-statutory requirements, the present application constitutes a continuation-in-part of U.S. patent application Ser. No. 10/827,576, entitled A SYSTEM FOR PERFUSION MANAGEMENT, naming Lowell L. Wood, Jr. as inventor, filed 19 Apr. 2004 U.S. Pat. No. 8,337,482, which is currently co-pending, or is an application of which a currently co-pending application is entitled to the benefit of the filing date.

For purposes of the USPTO extra-statutory requirements, the present application constitutes a continuation-in-part of U.S. patent application Ser. No. 10/827,578, entitled A SYSTEM WITH A SENSOR FOR PERFUSION MANAGEMENT, naming Lowell L. Wood, Jr. as inventor, filed 19 Apr. 2004 now abandoned, which is currently co-pending, or is an application of which a currently co-pending application is entitled to the benefit of the filing date.

For purposes of the USPTO extra-statutory requirements, the present application constitutes a continuation-in-part of U.S. patent application Ser. No. 10/827,572, entitled A SYSTEM WITH A RESERVOIR FOR PERFUSION MANAGEMENT, naming Lowell L. Wood, Jr. as inventor, filed 19 Apr. 2004 now U.S. Pat. No. 7,850,676, which is currently co-pending, or is an application of which a currently co-pending application is entitled to the benefit of the filing date.

For purposes of the USPTO extra-statutory requirements, the present application constitutes a continuation-in-part of U.S. patent application Ser. No. 10/827,390, entitled A TELESCOPING PERFUSION MANAGEMENT SYSTEM, naming Lowell L. Wood, Jr. as inventor, filed 19 Apr. 2004 now U.S. Pat. No. 8,361,013, which is currently co-pending, or is an application of which a currently co-pending application is entitled to the benefit of the filing date.

For purposes of the USPTO extra-statutory requirements, the present application constitutes a continuation-in-part of U.S. patent application Ser. No. 11/403,230, entitled LUMENALLY-ACTIVE DEVICE, naming Bran Ferren, W. Daniel Hillis, Roderick A. Hyde, Muriel Y. Ishikawa, Edward K. Y. Jung, Nathan P. Myhrvold, Elizabeth A. Sweeney, Clarence T. Tegreene, Richa Wilson, Lowell L. Wood, Jr. and Victoria Y. H. Wood as inventors, filed 12 Apr. 2006 now U.S. Pat. No. 9,011,329, which is currently co-pending, or is an application of which a currently co-pending application is entitled to the benefit of the filing date.

For purposes of the USPTO extra-statutory requirements, the present application constitutes a continuation-in-part of U.S. patent application Ser. No. 11/417,898, entitled CONTROLLABLE RELEASE NASAL SYSTEM, naming W. Daniel Hillis, Roderick A. Hyde, Muriel Y. Ishikawa, Elizabeth A. Sweeney, Clarence T. Tegreene, Richa Wilson, Lowell L. Wood, Jr. and Victoria Y. H. Wood as inventors, filed 4 May 2006 now U.S. Pat. No. 8,353,896, which is currently co-pending, or is an application of which a currently co-pending application is entitled to the benefit of the filing date.

For purposes of the USPTO extra-statutory requirements, the present application constitutes a continuation-in-part of U.S. patent application Ser. No. 11/478,368, entitled LUMENALLY-ACTIVE DEVICE, naming Bran Ferren, W. Daniel Hillis, Roderick A. Hyde, Muriel Y. Ishikawa, Edward K. Y. Jung, Nathan P. Myhrvold, Elizabeth A. Sweeney, Clarence T. Tegreene, Richa Wilson, Lowell L. Wood, Jr. and Victoria Y. H. Wood, as inventors, filed 28 Jun. 2006 now abandoned, which is currently co-pending, or is an application of which a currently co-pending application is entitled to the benefit of the filing date.

For purposes of the USPTO extra-statutory requirements, the present application constitutes a continuation-in-part of U.S. patent application Ser. No. 11/485,619, entitled CONTROLLABLE RELEASE NASAL SYSTEM, naming W. Daniel Hillis, Roderick A. Hyde, Muriel Y. Ishikawa, Elizabeth A. Sweeney, Clarence T. Tegreene, Richa Wilson, Lowell L. Wood, Jr. and Victoria Y. H. Wood as inventors, filed 11 Jul. 2006 now U.S. Pat. No. 9,173,837, which is currently co-pending, or is an application of which a currently co-pending application is entitled to the benefit of the filing date.

For purposes of the USPTO extra-statutory requirements, the present application constitutes a continuation-in-part of U.S. patent application Ser. No. 11/645,357, entitled LUMEN-TRAVELING DEVICE, naming Bran Ferren, W. Daniel Hillis, Roderick A. Hyde, Muriel Y. Ishikawa, Edward K. Y. Jung, Eric C. Leuthardt, Nathan P. Myhrvold, Elizabeth A. Sweeney, Clarence T. Tegreene, Lowell L. Wood, Jr. and Victoria Y. H. Wood as inventors, filed 21 Dec. 2006 now U.S. Pat. No. 7,857,767, which is currently co-pending, or is an application of which a currently co-pending application is entitled to the benefit of the filing date.

For purposes of the USPTO extra-statutory requirements, the present application constitutes a continuation-in-part of U.S. patent application Ser. No. 11/645,358, entitled LUMEN-TRAVELING DEVICE, naming Bran Ferren, W. Daniel Hillis, Roderick A. Hyde, Muriel Y. Ishikawa, Edward K. Y. Jung, Eric C. Leuthardt, Nathan P. Myhrvold, Elizabeth A. Sweeney, Clarence T. Tegreene, Lowell L. Wood, Jr. and Victoria Y. H. Wood as inventors, filed 21 Dec. 2006 now U.S. Pat. No. 8,000,784, which is currently co-pending, or is

an application of which a currently co-pending application is entitled to the benefit of the filing date.

For purposes of the USPTO extra-statutory requirements, the present application constitutes a continuation-in-part of U.S. patent application Ser. No. 11/651,946, entitled LUMEN-TRAVELING DELIVERY DEVICE, naming Bran Ferren, W. Daniel Hillis, Roderick A. Hyde, Muriel Y. Ishikawa, Edward K. Y. Jung, Eric C. Leuthardt, Nathan P. Myhrvold, Elizabeth A. Sweeney, Clarence T. Tegreene, Lowell L. Wood, Jr. and Victoria Y. H. Wood as inventors, filed 9 Jan. 2007 now U.S. Pat. No. 7,998,060, which is currently co-pending, or is an application of which a currently co-pending application is entitled to the benefit of the filing date.

For purposes of the USPTO extra-statutory requirements, the present application constitutes a continuation-in-part of U.S. patent application Ser. No. 11/726,031, entitled LUMEN-TRAVELING BIOLOGICAL INTERFACE DEVICE AND METHOD OF USE, naming Bran Ferren, W. Daniel Hillis, Roderick A. Hyde, Muriel Y. Ishikawa, Edward K. Y. Jung, Eric C. Leuthardt, Nathan P. Myhrvold, Clarence T. Tegreene, Lowell L. Wood, Jr. and Victoria Y. H. Wood as inventors, filed 19 Mar. 2007, which is currently co-pending, or is an application of which a currently co-pending application is entitled to the benefit of the filing date.

For purposes of the USPTO extra-statutory requirements, the present application constitutes a continuation-in-part of U.S. patent application Ser. No. 11/726,025, entitled BIO-ELECTROMAGNETIC INTERFACE SYSTEM, naming Bran Ferren, W. Daniel Hillis, Roderick A. Hyde, Muriel Y. Ishikawa, Edward K. Y. Jung, Eric C. Leuthardt, Nathan P. Myhrvold, Clarence T. Tegreene, Lowell L. Wood, Jr. and Victoria Y. H. Wood as inventors, filed 19 Mar. 2007, which is currently co-pending, or is an application of which a currently co-pending application is entitled to the benefit of the filing date.

The United States Patent Office (USPTO) has published a notice to the effect that the USPTO's computer programs require that patent applicants reference both a serial number and indicate whether an application is a continuation or continuation-in-part. Stephen G. Kunin, Benefit of Prior-Filed Application, USPTO Official Gazette Mar. 18, 2003, available at http://www.uspto.gov/web/offices/com/sol/og/2003/week11/patbene.htm. The present applicant entity has provided above a specific reference to the application(s) from which priority is being claimed as recited by statute. Applicant entity understands that the statute is unambiguous in its specific reference language and does not require either a serial number or any characterization, such as "continuation" or "continuation-in-part," for claiming priority to U.S. patent applications. Notwithstanding the foregoing, applicant entity understands that the USPTO's computer programs have certain data entry requirements, and hence applicant entity is designating the present application as a continuation-in-part of its parent applications as set forth above, but expressly points out that such designations are not to be construed in any way as any type of commentary and/or admission as to whether or not the present application contains any new matter in addition to the matter of its parent application(s).

All subject matter of the Related Applications and of any and all parent, grandparent, great-grandparent, etc. applications of the Related Applications is incorporated herein by reference to the extent such subject matter is not inconsistent herewith.

BACKGROUND

Devices and systems have been developed for use in various body lumens, particularly in the cardiovascular system, digestive tract, and urogenital tract. Catheters are used for performing a variety of sensing, material delivery or surgical tasks. Stents are implanted in blood vessels for the purpose of preventing stenosis or restenosis of blood vessels. Capsules containing sensing and imaging instrumentation that may be swallowed by a subject and which travel passively through the digestive tract have also been developed. Robotic devices intended to move through the lower portion of the digestive tract under their own power are also under development.

SUMMARY

The present application describes devices, systems, and related methods for performing one or more actions or tasks with a lumen-traveling biological interface device. Embodiments of devices capable of moving through a body lumen to a location and delivering a stimulus to or recording a signal from biological tissue are disclosed.

In one aspect, a lumen-traveling device may include a propelling mechanism capable of producing directional movement of the lumen-traveling device through a body lumen; a steering mechanism capable of modifying a direction of movement of the lumen-traveling device; at least one electromagnetic transducer configured for at least one of producing an output signal representative of a bioelectromagnetic signal sensed from a target tissue or delivering an electromagnetic stimulus to the target tissue; and at least one of a signal processing portion capable of processing the output signal from the electromagnetic transducer or a stimulus source capable of producing an electromagnetic stimulus for delivery to the target tissue with the electromagnetic transducer.

In another aspect, a lumen traveling device may include a propelling mechanism capable of producing directional movement of the lumen-traveling device through a body lumen; a steering mechanism capable of modifying a direction of movement of the lumen-traveling device; at least one electromagnetic transducer configured for at least one of producing an output signal representative of a bioelectromagnetic signal sensed from a target tissue or delivering an electromagnetic stimulus to the target tissue; at least one of a signal processing portion capable of processing the output signal from the electromagnetic transducer or a stimulus source capable of producing an electromagnetic stimulus for delivery to the target tissue with the electromagnetic transducer; and a sensor capable of sensing a local condition and generating a sense signal.

In addition to the foregoing, other device and system aspects are described in the claims, drawings, and text forming a part of the present disclosure.

In one aspect, a method of emplacing a bioelectromagnetic signal sensing device may include causing a self-propelling bioelectromagnetic signal sensing device to travel within a body tube tree of a subject toward a target site; if a branch point including two or more branches within the body tube tree is reached by the self-propelling bioelectromagnetic signal sensing device, causing the self-propelling bioelectromagnetic signal sensing device to enter a branch leading toward the target site; and causing the self-propelling bioelectromagnetic signal sensing device to stop traveling upon reaching the target site.

In addition to the foregoing, other method aspects are described in the claims, drawings, and text forming a part of the present disclosure.

Various aspects of the operation of lumen-traveling biological interface devices may be performed under the control of hardware, software, firmware, or a combination thereof. In one or more aspects, related systems include but are not limited to circuitry and/or programming for effecting the herein-referenced method aspects; the circuitry and/or programming can be virtually any combination of hardware, software, and/or firmware configured to effect the herein-referenced method aspects depending upon the design choices of the system designer.

The foregoing summary is illustrative only and is not intended to be in any way limiting. In addition to the illustrative aspects, embodiments, and features described above, further aspects, embodiments, and features will become apparent by reference to the drawings and the following detailed description.

BRIEF DESCRIPTION OF THE FIGURES

FIG. **1** is an illustration of an embodiment of a lumen-traveling device;

FIGS. **2**A-**2**D are illustrations of several embodiments of lumen-traveling device structural elements;

FIGS. **3**A-**3**C are illustrations of several embodiments of lumen-traveling device structural elements;

FIGS. **4**A and **4**B are illustrations of a device structure having a variable length and diameter;

FIGS. **5**A-**5**F are cross-sectional views of a number of embodiments of lumen-traveling device structures;

FIG. **6** illustrates an embodiment of a lumen-traveling device including a motion-arresting portion;

FIGS. **7**A-**7**D are illustrations of several embodiments of lumen-traveling device active portions;

FIGS. **8**A and **8**B are illustrations of several further embodiments of lumen-traveling device active portions;

FIGS. **9**A and **9**B illustrate a positioning mechanism of a lumen-traveling device;

FIGS. **10**A-**10**H depict examples of flow-modulating elements;

FIG. **11** is a depiction of a lumen-traveling device including a fluid-collection structure;

FIG. **12** is a depiction of a lumen-traveling device including a material collection structure;

FIG. **13** illustrates an embodiment of an active portion of a lumen-traveling device;

FIG. **14** illustrates an embodiment of an active portion of a lumen-traveling device;

FIG. **15** illustrates an embodiment of an active portion of a lumen-traveling device;

FIG. **16** is an illustration of a device including stored deliverable material;

FIG. **17** is a cross-sectional view of an embodiment of a device including a stored deliverable material and a barrier release mechanism;

FIG. **18** is a cross-sectional view of another embodiment of a device including a stored deliverable material and a barrier release mechanism;

FIGS. **19**A and **19**B are depictions of the release of a stored deliverable material from a reservoir via a rupturable barrier;

FIGS. **20**A and **20**B are depictions of the release of a stored deliverable material from a reservoir via a degradable barrier;

FIGS. **21**A and **21**B are depictions of the release of a stored deliverable material from a reservoir via a barrier having controllable permeability;

FIG. **22** is a cross-sectional view of another embodiment of a device including a stored deliverable material;

FIGS. **23**A and **23**B are depictions of the release of a stored deliverable material from a carrier material;

FIG. **24** illustrates a lumen-traveling device including a device release structure;

FIGS. **25**A and **25**B illustrate lumen-traveling devices including delivery and receiving structures;

FIG. **26**A is an illustration of a lumen-traveling device including a cutting tool;

FIG. **26**B is a cross-sectional view of the lumen-traveling device of FIG. **26**A;

FIG. **27** is an illustration of a lumen-traveling device including a scraping tool;

FIG. **28** is an illustration of a lumen-traveling system that includes an external control portion;

FIGS. **29**A-**29**E illustrate a propelling mechanism of a lumen-traveling device;

FIGS. **30**A and **30**B illustrate an example of a lumen-traveling device including expanding and extending structures;

FIG. **31** illustrates a propelling mechanism of a lumen-traveling device;

FIGS. **32**A and **32**B illustrate another embodiment of a propelling mechanism;

FIG. **33** illustrates another embodiment of a propelling mechanism;

FIG. **34** is a schematic diagram of a lumen-traveling device;

FIG. **35** is a schematic diagram of a lumen-traveling device including a remote portion;

FIG. **36** is flow diagram of a method implemented with a lumen-traveling device;

FIG. **37** is flow diagram of a further method implemented with a lumen-traveling device;

FIG. **38** is flow diagram of a further method implemented with a lumen-traveling device;

FIGS. **39**A and **39**B form a flow diagram showing several variants of a method implemented with a lumen-traveling device;

FIGS. **40**A-**40**F form a flow diagram showing further variants of a method implemented with a lumen-traveling device;

FIG. **41** is a block diagram of a lumen-traveling device system;

FIG. **42** is block diagram of an embodiment of logic for controlling a lumen-traveling device;

FIG. **43** is a block diagram of a further embodiment of logic for controlling a lumen-traveling device;

FIG. **44** is flow diagram of a method of using a lumen-traveling device;

FIG. **45** is a flow diagram of a method of using a lumen-traveling device;

FIG. **46** is a flow diagram of a method of using a lumen-traveling device;

FIG. **47** is a flow diagram of a method of using a lumen-traveling device;

FIGS. **48**A-**48**C illustrate an embodiment of a system including two lumen-traveling devices;

FIG. **49** is a flow diagram of a method of using a lumen-traveling device;

FIGS. **50**A and **50**B are longitudinal cross-sectional views of an example of the operation of a lumen-traveling device in a body lumen;

FIGS. **51**A and **51**B are longitudinal cross-sectional views of an example of the operation of a lumen-traveling device in a body lumen;

FIGS. **52**A and **52**B are longitudinal cross-sectional views of an example of the operation of a lumen-traveling device in a body lumen;

FIGS. **53**A and **53**B are longitudinal cross-sectional views of an example of the operation of a lumen-traveling device in a body lumen;

FIG. **54** is a schematic diagram of an embodiment of a lumen-traveling device;

FIG. **55** is a schematic diagram of an embodiment of a lumen-traveling device;

FIG. **56** is a schematic diagram of an embodiment of a lumen-traveling device;

FIG. **57** is a schematic diagram of an embodiment of a lumen-traveling device including a remote portion;

FIG. **58** is a flow diagram of a method of emplacing an electrical stimulation device;

FIG. **59** is a flow diagram showing variations of the method of FIG. **58**;

FIG. **60** is a flow diagram showing variations of the method of FIG. **58**;

FIG. **61** is a flow diagram showing variations of the method of FIG. **58**;

FIG. **62** is a diagram showing variations of the method of FIG. **58**;

FIG. **63** is a diagram showing variations of the method of FIG. **58**;

FIG. **64** illustrates the delivery of a lumen-traveling device into the body by injection;

FIG. **65** illustrates the release of a lumen-traveling device from a catheter;

FIG. **66** illustrates the delivery of multiple lumen-traveling devices by injection;

FIGS. **67**A and **67**B contain a flow diagram showing still further variations of the method of FIG. **58**;

FIG. **68** illustrates delivery of a stimulus by a lumen-traveling device based upon a sensed signal;

FIG. **69** is a flow diagram of a further variation of the method of FIG. **58**;

FIG. **70** is a flow diagram of an extension of the method of FIG. **58** to include emplacement of at least one additional self-propelling electromagnetic stimulation device;

FIG. **71** is a flow diagram of an extension of the method of FIG. **58**;

FIG. **72** illustrates the use of multiple stimulation or recording devices positioned around a target tissue;

FIGS. **73**A, **73**B and **73**C illustrate the emplacement of a bioelectromagnetic interface device at a target site in a body lumen with a lumen-traveling device;

FIG. **74** is a flow diagram of a method of configuring a bioelectromagnetic interface system;

FIG. **75** is a flow diagram showing variations of the method of FIG. **74**;

FIG. **76** is a flow diagram showing variations of the method of FIG. **74**;

FIG. **77** is a flow diagram of a method of emplacing a bioelectromagnetic interface system;

FIGS. **78**A-**78**B illustrate the introduction of a plurality of bioelectromagnetic interface devices simultaneously;

FIG. **79** illustrates the use of multiple stimulation or recording devices positioned within a target tissue;

FIG. **80** is a flow diagram showing variants of the method of FIG. **77**;

FIG. **81** is a flow diagram showing further variants of the method of FIG. **77**;

FIG. **82** is a flow diagram showing further variants of the method of FIG. **77**;

FIG. **81** is a flow diagram showing further variants of the method of FIG. **77**;

FIG. **84** is a flow diagram showing further variants of the method of FIG. **77**;

FIG. **85** is a flow diagram of a method of emplacing a neural stimulation device;

FIG. **86** is a flow diagram showing several variants of the method of FIG. **85**;

FIG. **87** is a flow diagram showing further variants of the method of FIG. **85**;

FIG. **88** is a flow diagram showing further variants of the method of FIG. **85**;

FIG. **89** is a diagram showing still further variants of the method of FIG. **85**;

FIG. **90** is a flow diagram of a method of emplacing a bioelectromagnetic signal sensing device;

FIG. **91** is a flow diagram showing several variations of the method of FIG. **90**;

FIG. **92** is a flow diagram showing further variations of the method of FIG. **90**;

FIG. **93** is a flow diagram showing further variations of the method of FIG. **90**;

FIG. **94** is a flow diagram of a method of emplacing a cardiac stimulation device;

FIG. **95** is a flow diagram showing several variants of the method of FIG. **94**; and

FIG. **96** is a flow diagram showing several additional variants of the method of FIG. **94**.

DETAILED DESCRIPTION

In the following detailed description, reference is made to the accompanying drawings, which form a part hereof. In the drawings, similar symbols typically identify similar components, unless context dictates otherwise. The illustrative embodiments described in the detailed description, drawings, and claims are not meant to be limiting. Other embodiments may be utilized, and other changes may be made, without departing from the spirit or scope of the subject matter presented here.

A lumen-traveling device is an example of a lumenally active device. Lumenally active devices, and related methods and systems, are described in U.S. patent application Ser. No. 11/403,230, entitled "Lumenally Active Device," filed Apr. 12, 2006, which is incorporated herein by reference. U.S. patent application Ser. No. 11/403,230 describes a lumenally-active system that may include a structural element configured to fit within at least a portion of a body lumen, the structural element including a lumen-wall-engaging portion and a fluid-contacting portion configured to contact fluid within the body lumen; a sensor capable of detecting a condition of interest in the fluid; response initiation circuitry operatively connected to the sensor and configured to generate a response initiation signal upon detection of the condition of interest in the fluid by the sensor; and an active portion operatively connected to the response initiation circuitry and capable of producing a response upon receipt of the response initiation signal.

As illustrated in FIG. **1**, an embodiment of a lumen-traveling device **10** may include a structural element **12** configured to fit within at least a portion of a body lumen **14**. The structural element **12** may include a lumen-wall-engaging portion **16** and a fluid-contacting portion **18** configured to contact fluid within the body lumen. Lumen-traveling device **10** may also include a propelling mechanism **20**

capable of producing movement of the structural element **12** through a body lumen **14** in which the structural element is deployed, a sensor **22** capable of detecting a condition of interest in the body lumen, response initiation circuitry **24** operatively connected to the sensor **22** and configured to generate a response initiation signal upon detection of a condition of interest in the body lumen (e.g., plaque **30**); and an active portion **26** operatively connected to the response initiation circuitry and capable of producing a response upon receipt of the response initiation signal. Body lumen **14** is defined by wall portions **28**, which may be the walls of a blood vessel or other lumen-containing structure within the body of an organism. In this example, a body fluid flows through lumen **14** in the direction indicated by the arrow. Fluid flows through the central opening **32** of structural element **12**, with the interior surface of structural element **12** forming fluid-contacting portion **18**. In the embodiment of FIG. **1**, sensor **22** and active portion **26** may be located at a fluid-contacting portion **18**. Lumen-wall-engaging portions **16** may be, for example, rotating wheels, which function to frictionally engage wall portions **28**, and which may also, in combination with a rotary motor **20**, function as a propelling mechanism **34** to move lumen-traveling device **10** through body lumen **14**. In other embodiments of lumenally traveling devices, other structures and methods for engaging the lumen wall and/or propelling the device through the lumen may be employed.

Embodiments of a lumen-traveling device or system may be configured for use in (e.g., configured to fit within) body lumens of an organism including, for example, the respiratory tract, the cardiovascular system (e.g., a blood vessel), a portion of a CSF-space (cerebro-spinal fluid space) of the nervous system (e.g., the spinal canal, the ventricles of the brain, the sub-arachnoid space, etc.), a portion of the urinary tract (for example a ureter), a portion of the lymphatic system, a portion of the abdominal cavity, a portion of the thoracic cavity, a portion of the digestive tract, a portion of a reproductive tract, either the female reproductive tract (e.g., a lumen of a fallopian tube) or the male reproductive tract (including various lumens including but not limited to the epididymis, vas deferens or ductul deferens, efferent duct, ampulla, seminal duct, ejaculatory duct, or urethra), the biliary tract, a nostril or nasal cavity, the oral cavity, the digestive tract, the tear ducts, or a glandular system. Other body lumens may be found in the auditory or visual system, or in interconnections thereof e.g., the Eustachian tubes. Some of the devices and systems described herein may be used in body lumens through which fluid flows, but it is not intended that such devices or systems are limited to use in tubular lumen-containing structures containing moving fluid; in some applications a lumen-traveling device may be used in a body lumen containing relatively unmoving, or intermittently moving fluid.

The term "body tube tree", as used herein, refers to a body lumen having a branching structure, i.e., that it includes at least one branch point where a first region of a lumen splits into two or more branches, or where a side lumen branches off from a main lumen. "Body tube tree" is not intended to convey any particular structure, configuration, level or organization, or level of complexity, beyond that indicated above. Examples of body tube trees include, but are not limited, the cardiovascular system, the respiratory system, and the CSF-space, for example.

Also included within the scope of the term "body lumen" are man-made lumens within the body, including vascular catheters, spinal fluid shunts, vascular grafts, bowel re-anastomoses, bypass grafts, indwelling stents of various types (e.g., vascular, gastrointestinal, tracheal, respiratory, ureteral, genitourinary, etc.) and surgically created fistulas.

The term fluid, as used herein, may refer to liquids, gases, and other compositions, mixtures, or materials exhibiting fluid behavior. The fluid within a body lumen may include a liquid, or a gas or gaseous mixtures. As used herein, the term fluid may encompass liquids, gases, or mixtures thereof that also include solid particles in a fluid carrier. Liquids may include mixtures of two or more different liquids, solutions, slurries, or suspensions. Body fluids may include components such as, for example, cells, cellular fractions or components, collections or aggregations of cells, bacterial, viral or fungal species, ions, molecules, gas bubbles, dissolved gas, suspended particles, or a variety of other materials that may be present in the body fluid. Body fluid components may be materials that are normally present in the body fluid, materials that are naturally derived but not normally present in the body fluid, or foreign materials that have entered or been introduced to the body fluid (including but not limited to pathogens, toxins, pollutants, or medications, for example). Examples of liquids present within body lumens include blood, lymph, serum, urine, semen, digestive fluids, tears, saliva, mucous, cerebro-spinal fluid, intestinal contents, bile, epithelial exudate, or esophageal contents. Liquids present within body lumens may include synthetic or introduced liquids, such as blood substitutes, or drug, nutrient, or saline solutions. Fluids may include liquids containing dissolved gases or gas bubbles, or gases containing fine liquid droplets or solid particles. Gases or gaseous mixtures found within body lumens may include inhaled and exhaled air, e.g. in the nasal or respiratory tract, or intestinal gases.

A lumen-traveling device may be configured to fit within a particular lumen through appropriate selection of device dimensions, material properties, and propelling mechanism. Configuration aspects may include size, shape, rigidity/flexibility, porosity, and biocompatibility, among others, which may depend on both the materials and construction of the device. Dimensions of a lumen-traveling device may be selected so that the device will be small enough to fit within the smallest expected dimension of the lumen of interest. A material that is both biocompatible and sufficiently durable for use in the lumen of choice may be selected based on standards well known to those of skill in the art. Wherever a lumen-traveling device or system is to be used, the dimensions and mechanical properties (e.g., rigidity) of the lumen-traveling system, and particularly of the structural element of the lumen-traveling system, may be selected for compatibility with the location of use, in order to provide for reliable positioning of the device and to prevent damage to the lumen-containing structure including the body lumen. The propelling mechanism may be selected for the type and nature of the lumen to be traveled. A lumen having a relatively uniform cross-section (height and/or width) over the length to be traveled may be traversed by most propelling mechanisms. A lumen that varies significantly in cross-section over the length to be traveled may pose a challenge for some propelling mechanisms that engage the lumen wall on all sides, but a lumen-traveling device that walks or rolls along one side of a lumen, or employs more than one mode of propulsion, may adapt well to changes in lumen cross-section. A lumen-traveling device that is capable of altering its dimensions (e.g. changing in length and diameter) may also be of utility in some applications. For example, see U.S. Patent Application 2005/0177223, which is incorporated herein by reference in its entirety. However, in many cases it may be possible to design a lumen-traveling device of

fixed dimension suited for a particular application, or provide a set of lumen-traveling devices in several sizes, from which the best size can be selected for a particular application or particular patient, to account for variability in lumen dimensions between individual patients. The lumen-traveling device may include a structural element carrying at least one of the propelling mechanism, motion control circuitry, sensor, response initiation circuitry or active portion. Various materials may be used in the construction of the structural element. For example, the structural element may include a self-expanding material, a resilient material, or a mesh-like material. Flexibility may also be conferred by configuration as well as material: for example, the structural element may include a slotted structure. The structural element may include a biocompatible material, as noted above, and may include a bioactive component (such as a drug-releasing coating or bioactive material attached to or incorporated into the structural element).

FIGS. **2**A-**2**D depict a number of possible configurations for structural elements of lumen-traveling devices for use in body lumens. In some embodiments, the structural element may be a substantially tubular structure. The structural element may include one or multiple lumens in fluid communication with the body lumen. In some embodiments, the structural element may have an adjustable diameter. Structural elements may have the form of a short cylinder **50**, as shown in FIG. **2**A; an annulus **52**, as shown in FIG. **2**B; a cylinder **54**, as shown in FIG. **2**C; or a spiral **56**, as shown in FIG. **2**D. A spiral structure is disclosed, for example, in Bezrouk et al, "Temperature Characteristics of Nitinol Spiral Stents"; Scripta Medica (BRNO); bearing dates of August 2005, October 2005; pp. 219-226; Vol. 78, No. 4, which is incorporated herein by reference in its entirety. Elongated forms such as cylinder **54** or spiral **56** may be suitable for use in tubular lumen-containing structures such as, for example, blood vessels.

Structural elements may be formed from various materials, including metals, polymers, fabrics, and various composite materials, including ones of either inorganic or organic character, the latter including materials of both biologic and abiologic origin, selected to provide suitable biocompatibility and mechanical properties. In these, and other examples of structural elements, it is contemplated that additional components, such as sensors, circuitry, and propelling mechanisms, for example, will be attached or connected to, manufactured on, or formed integrally with the structural element, but such additional components are not illustrated in these figures.

In some embodiments, the structural element may include a self-expanding material, or a resilient material. In some embodiments, the form as well as the material of the structural element may contribute to the expanding or flexing properties of the structural element. For example, the structural element may be formed from or include a mesh-like material or a slotted structure.

As shown in FIGS. **3**A-**3**C, the basic form of a structural element may be subject to different variations, e.g., by perforations, as shown in structural element **60** in FIG. **3**A; a mesh structure, as shown in structural element **62** in FIG. **3**B; or the inclusion of one or more slots **64** in structural element **66** in FIG. **3**C. Slot **64** runs along the entire length of structural element **66**; in other embodiments, one or more slots (or mesh or perforations) may be present in only a portion of the structural element. By using spiral, mesh, or slotted structural elements (as in FIGS. **2**D, **3**B, and **3**C) formed from resilient material, elastic, springy or self-expanding/self-contracting structural elements may be formed. A self-expanding or self-contracting structural element may facilitate positioning of the structural element within a body lumen of an organism. In some embodiments, flexible material having adjustable diameter, taper, and length properties may be used. For example, some materials may change from a longer, narrower configuration **70** as shown in FIG. **4**A, to a shorter, wider configuration **72** as shown in FIG. **4**B, or may taper over their length. Structural elements that may exhibit this type of expansion/contraction property may include mesh structures formed of various metals or plastics, and some polymeric materials, for example. Examples of possible shape change materials are described in "Agile new plastics change shape with heat"; MIT News Office; Nov. 20, 2006; pp. 1-4; Massachusetts Institute of Technology; printed on Nov. 22, 2006; located at http://web.mit.edu/newsoffice/2006/triple-shape.html; "Agile new plastics change shape with heat"; MIT Tech Talk; Nov. 22, 2006; p. 5 (1 page); and SHAHINPOOR, MOHSEN; KIM, KWANG J. ("Ionic polymer-metal composites: IV. Industrial and medical applications; Smart Materials and Structures; 2005; pp. 197-214; Vol. 14; Institute of Physics Publishing), all of which are incorporated herein by reference in their entirety.

The exemplary embodiments depicted in FIGS. **2**A-**2**C, **3**A-**3**C, and **4**A and **4**B are substantially cylindrical, and hollow and tubular in configuration, with a single central opening. Thus, the exterior of the cylindrical structural element may contact and engage the wall of the body lumen, and the interior of the structural element (within the single central opening) may form a fluid-contacting portion of the structural element. Lumen-traveling devices according to various embodiments are not limited to cylindrical structural elements having a single central opening, however. Alternatively, a structural element may be configured to contact and move along a portion of a wall of a body lumen, contacting or engaging the lumen wall over a portion of its cross-section (as opposed to contacting the lumen wall along its entire cross-section) without obstructing the movement of fluid within the body lumen. Such an embodiment may be approximately hemi-spherical or hemi-elliptoid, with a cross-section as depicted in FIG. **5**A. Other embodiments may be pill- or capsule-shaped, adapted to move through a central portion of a body lumen.

FIGS. **5**A through **5**F depict a variety of cross-sectional configurations for structural elements of lumen-traveling devices. In FIG. **5**A, a lumen-traveling device **100** is positioned in lumen **102** of lumen-containing structure **104**. In this embodiment, fluid-contacting portion **106** may be the surface of structural element **100** that faces lumen **102**, while the lumen-wall-engaging portion **108** may include a layer of tissue adhesive on surface **110** of structural element **100**. Tissue adhesives may be released from the lumen-traveling device when it has reached its destination. Lumen-traveling device **100** may be approximately hemi-spherical or hemi-ovoid. Lumen-wall-engaging portion **108** may have a curvature that corresponds approximately to the curvature of the lumen.

FIG. **5**B depicts in cross-section a further embodiment of a structural element **150** in lumen **152** of lumen-containing structure **154**. Structural element **150** includes multiple openings **156**, each of which includes an interior surface **158** that forms a fluid-contacting portion. Structural element **150** may include one or more hook or claw-like structures **160** that serve as lumen-wall-engaging portions that maintain structural element **150** in position with respect to lumen-containing structure **154**.

FIG. **5**C depicts in cross-section an embodiment of a structural element **200** in lumen **202** of lumen-containing structure **204**. Structural element **200** includes a large central opening **206** and multiple surrounding openings **208**. The interior surface of each opening **206** or **208** serves as a fluid-contacting portion, while projections **210** function as lumen-wall-engaging portions, which may engage frictionally or may project slightly into the interior of the wall of lumen-containing structure **204**.

FIG. **5**D depicts a further embodiment in which structural element **250** has a substantially oval cross-section and includes a slot **252**. Lumen-containing structure **254** may be generally oval in cross section, or may be flexible enough to be deformed to the shape of structural element **250**. Structural element **250** may be a compressed spring-like structure that produces outward forces as indicated by the black arrows, so that end portions **256** of structural element **250** thus press against and engage the lumen wall. Interior surface **258** of structural element **250** serves as the fluid-contacting portion of structural element **250**.

FIG. **5**E is a cross-sectional view of a structural element **300** in a lumen-containing structure **302**. Structural element **300** includes multiple projecting arms **304** which contact lumen wall **306** of lumen-containing structure **302**, and function as lumen-wall-engaging portions. Inner surfaces **308** of arms **304** function as fluid-contacting portions of structural element **300**.

FIG. **5**F depicts (in cross-section) another example of a structural element **350** positioned within a lumen-containing structure **352**. Structural element **350** includes two openings **354**. The interior surfaces **356** of openings **354** function as fluid-contacting portions, while the outer surface **358** of structural element **350** serves as a lumen-wall-engaging portion.

The structural elements depicted in FIGS. **1-5** are intended to serve as examples, and are in no way limiting. The choice of structural element size and configuration appropriate for a particular body lumen may be selected by a person of skill in the art. Structural elements may be constructed by a variety of manufacturing methods, from a variety of materials. Appropriate materials may include metals, ceramics, polymers, and composite materials having suitable biocompatibility, sterilizability, mechanical, and physical properties, as will be known to those of skill in the art. Examples of materials and selection criteria are described, for example, in *The Biomedical Engineering Handbook*, Second Edition, Volume I, J. D. Bronzino, Ed., Copyright 2000, CRC Press LLC, pp. IV-1-43-31. Manufacturing techniques may include injection molding, extrusion, die-cutting, rapid-prototyping, self-assembly, etc., and will depend on the choice of material and device size and configuration. Sensing portions, active portions, and propelling mechanisms or structures of the lumen-traveling device as well as associated circuitry (not depicted in FIGS. **2-5**) may be fabricated on the structural element using various microfabrication and/or MEMS techniques, or may be constructed separately and subsequently assembled to the structural element, as one or more distinct components. Examples of microfabrication techniques include, for example, those disclosed in U.S. Patent Applications 2005/0221529, 2005/0121411, 2005/0126916, and NYITRAI, ZSOLT; ILLY-EFALVI-VITÉZ, ZSOLT; PINKOLA, JÁNOS; "Preparing Stents with Masking & Etching Technology"; 26th International Spring Seminar on Electronics Technology; bearing dates of May 8, 2003-May 11, 2003 and 2003; pp. 321-324; IEEE, all of which are incorporated by reference in their entirety.

According to an embodiment as shown in FIG. **6**, a lumen-traveling device **400** may include a motion-arresting portion **402**; a fluid-contacting portion **404** configured to contact fluid within a body lumen and to at least intermittently permit flow of fluid through the body lumen; a propelling mechanism **406** capable of producing movement of the lumen-traveling device through a body lumen in which the lumen-traveling device is deployed; motion control circuitry **408** carried at least in part by said lumen-traveling device and configured to control the propelling mechanism **406** to control movement of the lumen-traveling device **400** through the body lumen; a sensor **410** capable of detecting a condition of interest in the body lumen and generating a sense signal **412** indicating detection of the condition of interest; response initiation circuitry **414** operatively connected to the sensor and configured to generate a response initiation signal **416** upon receipt of the sense signal indicating detection of a condition of interest in the body lumen; and an active portion **418** operatively connected to the response initiation circuitry and capable of producing a response upon receipt of the response initiation signal. In some embodiments, the condition of interest may be a local condition of interest (e.g. a condition related to the presence of injured or diseased tissue, an anatomical feature, etc.).

The motion control circuitry may be operatively connected to the sensor and configured to control the propelling mechanism at least in part in response to receipt of the sense signal indicating detection of the condition of interest in the body lumen.

The motion-arresting portion may take various forms, including, for example, an anchor capable of attaching at least temporarily to a wall of the lumen, as shown in FIG. **6**; at least one hook or claw, e.g. as depicted in FIG. **5**B; at least one adhesive material or glue, as shown in FIG. **5**A; a brake to oppose the action of the propelling mechanism, or a shutoff for the propelling mechanism. In some embodiments, the motion-arresting portion may include a reversal mechanism for the propelling mechanism, in that to arrest motion it may be necessary to provide sufficient propulsion in the reverse direction to oppose a flow of fluid through the body lumen. The motion-arresting portion may be a part of, or associated with, the propelling mechanism (e.g. a shutoff for the propelling mechanism) or it may be a separate mechanism (adhesive, hook- or claw-like structure, anchor, etc.).

The lumen-traveling device may include an active portion capable of producing a response upon receipt of the response initiation signal. A lumen-traveling device may include a single active portion or multiple active portions, which may be of the same or different types. Active portions may perform related or complementary functions. A number of different types of active portion may be used in embodiments of the lumen-traveling device; a lumen-traveling device may include one or more active portions, and each active portion may perform one or more actions.

FIGS. **7-27** provide examples of different active portions which may be included in a lumen-traveling device. Some active portions may be most suitable for use in a lumen-traveling device while it is moving, and some active portions may be most suitable for use by a lumen-traveling device that is at rest within a body lumen. Many of the examples of active portions described herein may be adapted for use under either circumstance.

The active portion may include a heating element **450** as depicted in FIG. **7**A, operatively coupled to the response initiation circuitry **451** and configured to produce heating in

response to receipt of the response initiation signal. The heating element may be a resistive element that produces heat when current is passed through it, or it may be a magnetically active material that produces heat upon exposure to an electromagnetic field. Examples of magnetically active materials include permanently magnetizable materials, ferromagnetic materials such as iron, nickel, cobalt, and alloys thereof, ferrimagnetic materials such as magnetite, ferrous materials, ferric materials, diamagnetic materials such as quartz, paramagnetic materials such as silicate or sulfide, and antiferromagnetic materials such as canted antiferromagnetic materials which behave similarly to ferromagnetic materials; examples of electrically active materials include ferroelectrics, piezoelectrics and dielectrics. In some embodiments, heat may be generated through an exothermic chemical reaction. U.S. Patent Applications 2002/0147480 and 2005/0149170, provide examples of heating and/or cooling mechanisms and structures, and are incorporated herein by reference.

Alternatively, the active portion may include a cooling element **452** as depicted in FIG. **7**B, operatively coupled to the response initiation circuitry **453** and configured to produce cooling in response to receipt of the response initiation signal. Cooling may be produced by a number of mechanisms and/or structures. For example, cooling may be produced by an endothermic reaction (such as the mixing of ammonium nitrate and water) initiated by opening of a valve or actuation of a container in response to a control signal. Other methods and/or mechanisms of producing cooling may include, but are not limited to, thermoelectric (Peltier Effect) and liquid-gas-vaporization (Joule-Thomson) devices.

In some embodiments, the active portion may include an electromagnetic radiation source **454** as depicted in FIG. **7**C, operatively coupled to the response initiation circuitry **455** and configured to emit electromagnetic radiation in response to receipt of the response initiation signal. Electromagnetic radiation sources may include light sources, for example, such as light emitting diodes and laser diodes, or sources of other frequencies of electromagnetic energy or radiation, radio waves, microwaves, ultraviolet rays, infra-red rays, optical rays, terahertz beams, and the like.

The active portion may include an acoustic energy source **456** (e.g. a piezoelectric element) as depicted in FIG. **7**D, operatively coupled to the response initiation circuitry **457** and configured to emit acoustic energy in response to receipt of the response initiation signal. An acoustic energy source may generate pressure pulses of various frequencies, including auditory frequencies, subsonic frequencies, and ultrasonic frequencies. A microscale acoustic transducer may be constructed, for example, in U.S. Pat. No. 5,569,968, which is incorporated herein by reference.

The active portion may include a pressure source operatively coupled to the response initiation circuitry and configured to apply pressure to the body lumen in response to receipt of the response initiation signal. Applied pressure may be positive pressure (e.g., to form a pressure fit of the device with the lumen wall, as described above, or to apply pressure to a particular location, e.g. to stop bleeding) or negative pressure (e.g., a vacuum, to adhere a portion of the lumen wall to the lumen-traveling device, for example to seal off a leak or aneurysm, or to position the device, as described previously). Pressure applied to a body lumen may influence one or both of the lumen walls or the contents of the lumen; in some cases application of pressure to a body lumen may increase (or decrease) the pressure in a fluid (gas or liquid) within the body lumen. A pressure source may include materials that expand through absorption of water or other materials, expand or contract due to generation or consumption of gas, or change conformation by chemical reactions or temperature changes, electrically-engendered Maxwell stresses, osmotic stress-generators, etc. FIG. **8**A depicts a negative pressure source **460** capable of applying negative pressure (in this example, substantially radially-inward force) to lumen walls **461**, while FIG. **8**B depicts a positive pressure (expanding or expansion) source **462**, capable of applying positive pressure (in this example, a substantially radially-outward force) to lumen walls **461**.

Application of negative pressure to draw the lumen walls inward to form a seal with the lumen-traveling device, as depicted in FIG. **8**A, may be useful for repairing or compensating for an aneurysm or other structural damage or imperfection to a lumen wall. Expansion and/or application of positive pressure by the lumen-traveling device may function to open a constricted lumen or secure a lumen-traveling device in place within a lumen, as depicted in FIG. **8**B. Expansion of all or a portion of the lumen-traveling device may include expansion of a structural element or a portion thereof, which may be produced by inflation of one or more chambers with liquid or gas, or expansion or change in configuration of a shape-change material, bimetallic structure, etc.

The active portion may include a positioning element operatively coupled to the response initiation circuitry and configured to secure the lumen-traveling device into position within the body lumen in response to receipt of the response initiation signal. A positioning element may be a hook or claw-like structure that may penetrate into or catch on the surface of the lumen wall, as in FIG. **5**B, an expanding element that causes the lumen-traveling device to form a pressure-fit with the lumen, as in FIG. **8**B, an adhesive material or glue, as in FIG. **5**A, or other structure or material that may engage the lumen wall. A positioning element may also include a suction (negative pressure) generating mechanism that causes lumen-traveling device to adhere to the walls of the body lumen by suction, as depicted in FIG. **8**A, for example. Claw or hook-like structures may be fixed or movable. Movable structures may include mechanical elements and/or materials that change shape or rigidity in response to temperature, electric field, magnetic field, or various other control signals. As an example, FIGS. **9**A and **9**B depict a lumen-traveling device **554** that includes positioning elements **556**. Positioning elements such as positioning element **556** may be used as active portions in some embodiments of the invention. FIG. **9**B is a close up view showing a portion **558** of lumen-traveling device **554**, and detail of positioning element **556**. Positioning element **556** is shown in an extended configuration (indicated by a solid outline) but may also be retracted (as indicated by the dashed outline and reference number **560**). For example, positioning element **556** may change configuration on exposure to an electric current from current source **562** connected to positioning element **556** via circuitry **564**. Positioning element **556** may be a claw-like projection that may be moved or extended to cause it to dig into a lumen wall to position lumen-traveling device **554** with respect to a lumen wall. Positioning element **556** may cause the lumen-traveling device to be retained in a desired position within a lumen for brief or extended periods of time. For example positioning elements may be extended to temporarily hold the lumen-traveling device in place and subsequently retracted to permit the lumen-traveling device to continue moving through the lumen. Alternatively, the lumen-traveling device may move through the lumen until it reaches a location of

interest, and then the positioning elements may be extended substantially permanently to retain the lumen-traveling device at the location of interest substantially permanently. Various other types of positioning elements may be used, as well. For example, claws, clips, tensioning elements, expanding elements, and adhesives are all examples of positioning elements that may be used to retain a lumen-traveling device in a location. Certain positioning elements may be suited to retaining the lumen-traveling device in a location for extended periods, while other positioning elements may be more suited to retaining the lumen-traveling device in a location only briefly.

The active portion may include a flow-modulating element operatively connected to the response initiation circuitry and configured to modulate the flow of fluid through at least a portion of the body lumen in response to receipt of the response initiation signal. A flow-modulating element may modulate the flow of fluid through the body lumen to modify the amount of turbulence in the flow, the volume rate of flow, the fluid velocity, the direction of flow, or some other flow characteristic. A flow-modulating element may be, for example, a valve, a louver, a flow-directing element, a splitter or flow divider, a filter, a baffle, a channel restriction, a channel widening, or other structure capable of modifying the fluid flow according to principles of fluid dynamics known in the art. FIG. **10**A illustrates lumen-traveling device portion **600** including a first channel **602** and a second channel **604**, in which are located valves **606** and **608**, respectively. Valve **606** is in the open position, allowing fluid flow as indicated by the arrow. Valve **608** is in the closed position, to block the flow of fluid. Valves **606** and **608** may be any of various types of controllable valves or microvalves.

FIG. **10**B illustrates a lumen-traveling device **610** including a louver **612**, positioned within lumen **614**. Louver **612** may modify the flow of fluid within lumen **614**, e.g., by reducing turbulent flow or reducing flow velocity. Fluid may flow on either side of louver **612**, as indicated by the arrows.

FIG. **10**C illustrates a lumen-traveling device **620** including a flow-directing element **622**. Flow-directing element **622** may direct the flow of fluid within lumen **624**, so that fluid tends to move toward a particular portion of the lumen.

FIG. **10**D depicts a portion **630** of a lumen-traveling device that includes a splitter (or flow divider) **632**. Fluid may flow into main channel **634** and be divided so that it flows into branch channels **636** and **638**, which may lead to additional structures within a lumen-traveling device or within the body lumen (e.g., if the lumen-traveling device was used in the vascular system, branch channels **636** and **638** could lead to particular blood vessels branching off of a larger blood vessel in which the lumen-traveling device resided). A valve placed across main channel entrance **640**, or across the entrance of one or both branch channels (e.g., at entrance **642** of branch channel **636**) may be used to control the operation of splitter **632**.

FIG. **10**E depicts a lumen-traveling device **650** including a filter **652**, in a body lumen defined by lumen walls **654**. Filter **652** may be formed of screen, mesh, fibers, a sintered material, or various other materials, selected to remove particles in a particular size range or having particular affinity or binding properties from the fluid flowing though the filter.

FIG. **10**F depicts a lumen-traveling device **660** that include a baffle **662** for modifying the flow of fluid through the central opening **664** of lumen-traveling device **660**. In some embodiments, e.g. as depicted in FIG. **10**F, baffle **662** may be capable of rotating on axis **664** to move the baffle in an out of the channel to provide controlled modulation of fluid flow.

FIG. **10**G depicts a lumen-traveling device portion **670** having a central channel **672** with a channel restriction **674**. Channel restriction **674** may be formed by a projecting portion **676** extending around the circumference of channel **672**. Projecting portion **676** may be an expandable or inflatable structure, to provide a controllable channel restriction.

FIG. **10**H depicts a lumen-traveling device portion **680** having a central channel **682** leading to a channel widening **684**. Channel widening **684** may be formed by retraction of an expandable or inflatable structure **686** extending around the circumference of channel **682**. Expandable or inflatable structure **686** is shown in retracted configuration **686***a* (thus forming channel widening **684**) and in expanded configuration **686***b*, in which substantially no channel widening is formed. Expandable or inflatable structure **686** may be expanded to varying degrees to form varying sizes of channel widenings.

In some embodiments, the active portion of a lumen-traveling device may include a separator operatively connected to the response initiation circuitry and configured to selectively remove specific components from the fluid in response to detection of the condition of interest. A separator may be, for example, a molecular sieve or mechanical filter (including, for example, screen, mesh, fiber, etc., as depicted in FIG. **10**E) having openings sized to allow passage of particles or structures of a particular size or size range, or a chemical or biochemical separator based on binding affinity, charge, surface energy, etc. as is well known to those in the art. For example, U.S. Patent Application 2005/0126916, which is incorporated herein by reference, provides an example of a microfabricated mesh. A separator may remove components that are not desired from the fluid (e.g., because they are foreign, harmful, etc.) or it may remove components for the purpose of collecting a sample for analysis. Thus, in related embodiments the active portion may include a sample collector. Either fluid or solid (e.g., tissue) samples may be collected or captured, depending on the type and/or design of the sample collector. Examples of sample collection structures and mechanisms are provided in U.S. Pat. Nos. 6,436,120 and 6,712,835, and HANNA, DARRIN M.; OAKLEY, BARBARA A.; STRYKER, GABRIELLE A.; "Using a System-on-a-Chip Implantable Device to Filter Circulating Infected Cells in Blood or Lymph"; IEEE Transactions on Nanobioscience; bearing dates of Jan. 25, 2003, March 2003; pp. 6-13; Vol. 2, No. 1; IEEE, all of which are incorporated herein by reference in their entirety. Another mechanism for capturing a solid material is a grasper as disclosed in U.S. Pat. No. 6,679,893, which is incorporated herein by reference.

In some embodiments the active portion may include a fluid capture portion operatively coupled to the response initiation circuitry and configured to capture the detected material of interest. FIG. **11** depicts a device **700** including a fluid capture portion **706**. Lumen-traveling device **700** includes sensor **702**, response initiation circuitry **704**, and fluid capture portion **706**. Fluid enters fluid capture portion **706** via inlet **708**. Fluid capture portion **706** may be a reservoir, for example, into which fluid is drawn by capillary action or by a negative pressure generated by a pump, for example. Captured fluid may be treated and released, or simply stored. In some applications, stored fluid may be subjected to analysis.

The sample collection portion may be a fluid capture portion configured to passively collect a fluid and/or constituents thereof, including cells or other biologics, within a matrix material, which might be located on the exterior of the lumen-traveling device in some embodiments, or contained in a chamber (e.g., fluid capture portion **706** in FIG. **11**) in other embodiments. The matrix material may include an absorbent such as cotton, cellulose, natural or artificial sponge, a gel (a natural gel such as agarose, a natural and/or synthetic polymer gel, a hydrogel), a colloid, a gum base such as acacia gum, or micro particles. The sample collection portion may include a lipid monolayer, lipid bilayer, liposome, dendrimer, ligand affinity resin with conjugated peptide or antibody, ionophore, hydrosol, sol-gel, xerogel, aerogel, smart gel, hydrocarbon gel, or ferrogel. Many types of porous hydrogels are known, such as those used in the wound dressing of U.S. Pat. No. 6,372,248, incorporated herein by reference in its entirety. Alternatively, the sample collector may include a synthetic or natural adsorbent material such as a proteoglycan or charged polymer like polylysine, of a type that promotes the adhesion of one or more fluid constituent, e.g. a cell or protein. Other materials may include semi-specific or non-specific adsorbers, such as silica (SiO_2) or alumina (Al_2O_3) gel or ion exchange resin, possibly as part of the matrix material. Further examples of materials for sample collection are disclosed in U.S. Pat. Nos. 6,861,001 and 6,475,639, which are incorporated herein by reference. Alternatively or in addition, the sample collector may include one or more recognition elements of a type able to recognize and/or specifically bind a constituent of the fluid. Such a recognition element might be a biologic, such as a staphylococcus protein A complex, which generally binds immunoglobulins; a binding peptide or protein like an immunoglobulin; a DNA binding protein and/or genetically engineered protein; a nucleic acid, perhaps an aptamer; a carbohydrate; a lipid; a conjugate; or a synthetic molecule like an artificial antibody or other mimetic. U.S. Pat. Nos. 6,255,361; 5,804,563; 6,797,522; and 5,831,012 and U.S. Patent Application 2004/0018508 provide examples of such mimetics and are incorporated herein by reference in their entirety.

FIG. **12** depicts lumen-traveling device **750** including a sample collection structure **752** capable of collecting a solid sample **754**, e.g. for biopsy purposed and/or for removal of damaged, diseases, or otherwise unwanted tissue. In the example depicted in FIG. **12**, solid sample **754** is a solid material found upon or immediately under the surface of the lumen-defining wall **756** (an arterial plaque, for example). Solid sample **754** placed in storage reservoir **758** by sample collection structure **752**. In a related alternative embodiment, a lumen-traveling device may include a filter or selective binding region to remove materials from fluid moving past or through the lumen-traveling device.

In some embodiments, the active portion may include a catalytic portion operatively connected to the response initiation circuitry and configured to expose or activate a catalyst in response to receipt of the response initiation signal. Examples of catalysts include inorganic catalysts such as metal surfaces, and organic catalysts such as enzymes. A surface having catalytic properties (such as a metal) or having catalytic material adhered or bound thereto may be exposed or activated by directing the flow of fluid across, the surface, modifying a chemical property of the surface, or removing a covering from the surface. For example, as shown in cross-section in FIG. **13**, a lumen-traveling device portion **800** may include a channel divider **802** separating two channels **804** and **806**. Channel **806** includes catalytic material **808**, which is capable of catalyzing a reaction with one or more component of fluid flowing through channel **806**, as indicated by the arrow. A movable gate **810** on pivot **812** may block the flow of fluid into channel **804** while permitting the flow of fluid into channel **806** and across catalytic material **808**, or it may be repositioned to block the flow of fluid into channel **806** while permitting the flow of fluid into channel **804**. In some embodiments of a lumen-traveling device, the active portion may include a catalytic portion operatively connected to the response initiation circuitry and configured to expose a catalytic surface to the fluid in response to detection of the condition of interest. The catalytic surface may catalyze a reaction that modifies or destroys a material of interest, for example.

The active portion may include an electric field source, as depicted in FIG. **14**, operatively connected to the response initiation circuitry and configured to apply an electric field to the fluid and/or lumen wall or surrounding tissue in response to receipt of the response initiation signal. For example, a lumen-traveling device **820**, here shown contacting wall **822** of lumen **824**, may include a first contact **826** and second contact **828** connected to source **830**. Source **830** may be a capacitor or other charge storing device, to generate a static electric field, or it may be current source capable of generating a dynamic electric field.

Alternatively, as shown in FIG. **15**, an active portion may include a magnetic field source operatively connected to the response initiation circuitry and configured to apply a magnetic field to the fluid and/or lumen wall or surrounding tissue in response to receipt of the response initiation signal. A lumen-traveling device **840** adjacent wall **842** of lumen **844** may include (for example) a coil **846** connected to current source **848**. Current from current source **848** flowing through coil **846** will produce a magnetic field as indicated in FIG. **15**. The magnetic field source need not include a coil; as known to those of skill in the art, a magnetic field may be generated by current flowing through various types of structures. Moreover, one or more fixed magnets may be included in a magnetic field source.

In some embodiments, the active portion of a lumen-traveling device may include a material release structure operatively coupled to the response initiation circuitry and configured to release a material in response to receipt of the response initiation signal. FIG. **16** depicts a delivery device **900** including a structural element **902**, sensor **904**, control signal generation circuitry **906**, and release structure **908** including release mechanism **910**. Structural element **902** includes external surface **912**, configured to fit within a body lumen, and internal surface **914** defining central opening **916**, through which a fluid may flow. Upon sensing of a condition of interest in the fluid by sensor **904**, control signal generation circuitry **906** may cause release of material from material release structure **908** by activating release mechanism **910**. Release mechanism **910** may include a variety of different types of release mechanisms, including, for example, a controllable valve. Various types of valves and microvalves are known to those of skill in the art, and may be used to regulate the release of material from material release structure **908** in response to a control signal from control signal generation circuitry **906**. Control signal generation circuitry **906** may activate release mechanism **910** by supplying a delivery control signal, which may be an electrical signal, for example. In some embodiments, other types of delivery control signals, including magnetic signals, optical signals, acoustic signals, or other types of signals may be used. Combinations of several types of signals may

be used in some embodiments. In some embodiments, control signal generation circuitry **906** may cause release of material from material release structure in response to passage of a certain amount of time, as monitored, for example, by a timekeeping device. In some embodiments, material release structure **908** may include a pressurized reservoir of material. In still other embodiments, the material (or materials) to be released may be generated within the material release structure. In other embodiments, the material(s) may diffuse away from the release structure along a concentration gradient.

FIG. **17** illustrates, in cross sectional view, a structural element **950** of a lumen-traveling device positioned in a lumen-containing structure **952**. A reservoir **954** contains stored deliverable material. Barrier **956** is a controllable barrier that control the release of the stored deliverable material into central opening **958**, and thus into a fluid that fills and/or flows through lumen-containing structure **952**.

FIG. **18** illustrates an embodiment similar to that depicted in FIG. **20**, including a structural element **1000** of a lumen-traveling device positioned in a lumen-containing structure **1002**. A reservoir **1004** contains stored deliverable material. Barrier **1006** is a controllable barrier that controls the release of the stored deliverable material. In the embodiment of FIG. **18**, activation of barrier **1006** causes release of the stored deliverable material toward the lumen wall of lumen-containing structure **1002**, rather than into central opening **1008**.

FIGS. **19**A, **19**B, **20**A, **20**B, **22**A and **22**B, illustrate several alternative embodiments of material release structures that include controllable barriers. In FIGS. **19**A and **19**B, release structure **1150** includes reservoir **1152** containing stored deliverable material **1154**. As shown in FIG. **19**A, while rupturable barrier **1156** is intact, stored deliverable material **1154** is contained within reservoir **1152**. As shown in FIG. **19**B, when rupturable barrier **1156** has been ruptured (as indicated by reference number **1156'**), deliverable material **1154** may be released from reservoir **1152**. Rupturable barrier **1156** may be ruptured by an increase of pressure in reservoir **1152** caused by heating, for example, which may be controlled by response initiation circuitry. In another alternative shown in FIGS. **20**A and **20**B, release structure **1200** includes reservoir **1202** containing stored deliverable material **1204**. As shown in FIG. **20**A, while degradable barrier **1206** is intact, stored deliverable material **1204** is contained within reservoir **1202**. As shown in FIG. **20**B, degradation of degradable barrier **1206** to degraded form **1206'** causes stored deliverable material **1204** to be released from reservoir **1204**. FIGS. **21**A and **21**B depict release structure **1250** including reservoir **1252** containing stored deliverable material **1254**. FIG. **21**A shows barrier **1256**, which has a controllable permeability, in a first, impermeable state, while FIG. **21**B shows barrier **1256** in a second, permeable state (indicated by reference number **1256'**). Stored deliverable material **1254** passes through barrier **1256'**, when it is in its permeable state, and is released. Rupturable barriers as described above may be formed from a variety of materials, including, but not limited to, metals, polymers, crystalline materials, glasses, ceramics, semiconductors, etc. Release of materials through rupture or degradation of a barrier is also described in U.S. Pat. No. 6,773,429, and U.S. Patent Application 2004/0260391, which are incorporated herein by reference. Semipermable barriers having variable permeability are described, for example, in U.S. Pat. No. 6,669,683, which is incorporated herein by reference. Those of skill in the art will appreciate that barriers can be formed and operated reversibly through multiple release cycles, in addition to the single-release functionality available from a rupturable barrier.

FIG. **22** depicts another embodiment of a structural element of a lumen-traveling device **1300** in a lumen containing structure **1302**. Lumen-traveling device **1300** includes stored deliverable material **1304** dispersed in a carrier material **1306**. Stored deliverable material **1304** may be released from carrier material **1306** by release mechanism **1308** upon activation of release mechanism **1308**. Released deliverable material **1304** may be released into central opening **1310** of lumen-traveling device **1300** and/or into the area around the lumen-traveling device.

FIGS. **23**A and **23**B depict in greater detail the release of stored deliverable material from the carrier material. In FIG. **23**A, deliverable material **1304** is stored in carrier material **1306**. Carrier material **1306** may be, for example, a polymeric material such as a hydrogel, and deliverable material is dispersed or dissolved within carrier material **1306**. Release mechanism **1308** may be a heating element, for example a resistive element connected directly to response initiation circuitry, or an electrically or magnetically responsive material that may be caused to move, vibrate or heat, by an externally applied electromagnetic field, which in turn causes release of deliverable material **1304** from carrier material **1306**, as shown in FIG. **23**B. See, for example, U.S. Pat. Nos. 5,019,372 and 5,830,207, which are incorporated herein by reference. In some embodiments, an electrically or magnetically active component may be heatable by an electromagnetic control signal, and heating of the electrically or magnetically active component may cause the polymer to undergo a change in configuration. An example of a magnetically responsive polymer is described, for example, in Neto, et al, "Optical, Magnetic and Dielectric Properties of Non-Liquid Crystalline Elastomers Doped with Magnetic Colloids"; Brazilian Journal of Physics; bearing a date of March 2005; pp. 184-189; Volume 35, Number 1, which is incorporated herein by reference. Other exemplary materials and structures are described in Agarwal et al., "Magnetically-driven temperature-controlled microfluidic actuators"; pp. 1-5; located at: http://www.unl.im-.dendai.ac.jp/INSS2004/INSS2004_papers/OralPresentations/C2.pdf or in U.S. Pat. No. 6,607,553, both of which are incorporated herein by reference. In connection with the release of materials and/or detection of a local condition, in some embodiments the permeability of the lumen wall to the released material may be increased by the use of retractable protrusions that penetrate the lumen wall, as described in U.S. Pat. No. 6,991,617; by hollow microneedles capable of penetrating the lumen wall, as described in U.S. Pat. No. 6,743,211; by introduction of a magnetic or electromagnetic field (Physical and Chemical Permeation Enhancers in Transdermal Delivery of Terbutaline Sulphate, *AAPS Pharm Sci Tech,* 2001; 2 (1) 1-5; http://www.aapspharmscitech.org/view.asp?art=pt0201_tnl); by a chemical permeability enhancer as described in U.S. Pat. No. 6,673,363, which may be released from the lumen-traveling delivery device along with the material or from a separate reservoir or other source or which may be incorporated within a component of the device for example as a coating; or by an electrical permeability enhancer, such as a voltage source for producing electroporation and/or iontophoresis, as in U.S. Pat. Nos. 6,022,316, 6,219,577, 6,512,950; or by sonophoresis or phonophoresis, perhaps using techniques based on those in U.S. Pat. No. 6,322,532; all of which patents are incorporated herein by reference in their entirety. Chemical permeation enhancers may include, for example, isopropyl myristate, bile salts, surfactants, fatty acids and derivatives,

chelators, cyclodextrins, or chitosan. Other technologies that might be useful for enhancing permeability may include iontophoresis, microdialysis, ultrafiltration, electromagnetic, osmotic, electroosmosis, sonophoresis, suction, electroporation, thermal poration, microporation, microfine cannulas, skin permeabilization, or a laser.

The active portion may include a device release structure operatively coupled to the response initiation circuitry and configured to release a device in response to receipt of the response initiation signal. For example, FIG. **24** illustrates a lumen-traveling device **1350** including device release structure **1352** (which in this example is a grasper type structure) holding a device **1354** that is to be released into a body lumen. Response initiation circuitry **1356** may receive a sense signal from sensor **1358**, and generate a response initiation signal to cause device release structure **1352** to release device **1354**. Device **1354** may be any type of device small enough to be carried by a lumen-traveling device. For example, device **1354** might be a sensor with a transmitter, a device that releases a drug or other compound, or an electromagnetic stimulation device. The device configuration illustrated in FIG. **24** is intended as an example only, and the device released by a device release structure of a lumen-traveling device may have various configurations. It will be appreciated that the device release structure may be designed to be compatible with a particular type of device, or may be suitable for use with a number of types of devices.

As illustrated in FIGS. **25**A and **25**B, the active portion of a lumen-traveling device **1400** may include a delivery structure **1402** operatively coupled to the response initiation circuitry **1404** and configured to deliver a material or structure **1408** to a receiving device in **1410** response to receipt of the response initiation signal. In FIG. **25**A, lumen-traveling device **1400** includes delivery structure **1402**, which is capable of attaching to connector **1406** on structure **1408**, thus permitting structure **1408** to be carried by lumen-traveling device **1400**. In use, lumen-traveling device **1400** may carry structure **1408** to receiving device **1410**. A response initiation signal may be generated by response initiation circuitry **1404** when lumen-traveling device **1400** is close to receiving device **1410**. Receiving device **1410** may include a receiving structure **1413** made up of recess **1412** and receiving arms **1414** mounted on pivots **1416**. Receiving device **1410** may be a non-mobile device or structure that has been implanted or placed in the lumen, or, in some embodiments, receiving device **1410** may be a second lumen-traveling device. The second lumen-traveling device may include various features as described previously; the active portion may include a receiving structure (e.g., receiving structure **1413** in FIGS. **25**A and **25**B) operatively coupled to the response initiation circuitry and configured to receive a material or structure (e.g., structure **1408**) from a delivering device **1400** in response to receipt of the response initiation signal. As structure **1408** is pushed into receiving recess **1412**, receiving arms **1414** may be caused to move on pivots **1416** to allow structure **1408** to slide into recess **1412**, where it may be retained by projections **1418**, as illustrated in FIG. **25**B.

The active portion may include a collecting structure operatively coupled to the response initiation circuitry and configured to collect a structure (including, but not limited to, a man-made structure) from the body lumen in response to receipt of the response initiation signal. The collecting structure may be comparable to a device release structure as depicted previously, and may collect a structure from the body lumen by attaching to a connector such as connector **1406**. In related embodiments, the collecting structure may grasp the body of a device-to-be-collected, generally as depicted in FIG. **24**. In other embodiments, a collecting structure may be large enough to receive the structure to be collected within the body of the lumen-traveling device.

The active portion of a lumen-traveling device may include an attachment structure operatively coupled to the response initiation circuitry and configured to attach to a structure (particularly a man-made structure) present in the body lumen in response to receipt of the response initiation signal. The attachment structure may be a grasper shown in FIG. **24** or the device release structure shown in FIGS. **25**A and **25**B. Other attachment mechanisms may include various other mechanical mechanisms, or be based on magnetic attraction, electrostatic forces, chemical bonding, surface interactions, etc. Microscale structures for gripping or grasping are described in U.S. Pat. No. 6,398,280, and "Zyvex NanoEffector Microgrippers"; Nanotechnology at Zyvex; printed on Dec. 7, 2006; pp. 1-2; located at http://www-.zyvex.com/Products/Grippers_Features.html and "Zyvex NanoEffector Microgrippers"; Zyvex.com; bearing a date of 2006; pp. 1-2; Zyvex Corporation, all of which are incorporated herein by reference.

The active portion may include one or more tools, especially surgical tools, e.g., tools for cutting, as depicted in FIGS. **26**A and **26**B, scraping, as depicted in FIG. **27**, suturing, or cauterizing. In FIG. **26**A, a lumen-traveling device **1450** includes a cutting tool **1452** mounted on shaft **1454**, which may be retracted into channel **1456**, driven by translation motor **1458**. In the embodiment depicted in FIG. **26**A, lumen-traveling device **1450** includes main lumen **1460**. A cross-section of lumen-traveling device **1450** taken at section line B-B, showing shaft **1454**, channel **1456**, and main lumen **1460** is illustrated in FIG. **26**B. Channel **1456** and main lumen **1460** pass through core portion **1462** of lumen-traveling device **1450**.

FIG. **27** depicts a lumen-traveling device **1500**, generally similar to lumen-traveling device **1450** in FIGS. **26**A and **26**B, but including a scraping tool **1502**. Scraping tool **1502** is mounted on shaft **1504** which may retract in channel **1506**. Shaft **1504** may also rotate in channel **1506**, both during use of scraping tool **1502**, as illustrated with the double-headed arrow, and also to permit the scraping tool **1502** to be retracted into main lumen **1508** of the lumen-traveling device, to the position shown in dashed lines. An example of a scraping tool is presented in JP 2005-74229, which is incorporated herein by reference.

Various examples of suturing tools are disclosed and described in U.S. Pat. Nos. 7,131,979 and 5,964,773, both of which are incorporated herein by reference. A cauterizing tool may be a specialized form of a heating element, as depicted in FIG. **7**A, or electromagnetic radiation source as depicted in FIG. **7**C. Tools may be micro-scale tools formed by MEMS manufacturing techniques, e.g., as described in U.S. Pat. No. 5,728,089, which is incorporated herein by reference. It will be appreciated that various other active portions disclosed herein may also have surgical utility: for example, active portions for performing sample collection, material release, heating, cooling, etc. may all have surgical applications.

FIG. **28** depicts a system **1600** including a lumen-traveling device **1602** located in a body lumen **1604** (here, a portion of the circulatory system) and a remote portion **1606**, which in this example is located outside body surface **1608**. In some embodiments, a remote portion may be located inside the body at a distance from the lumen-traveling device. The active portion of a lumen-traveling device **1602** may include a transmitter **1610** operatively coupled to the

response initiation circuitry and configured to transmit a detection signal **1612** to a remote location (e.g., remote portion **1606**) in response to receipt of the response initiation signal. The detection signal may be used to inform a medical caregiver about a condition of the subject so that suitable treatment may be provided by the caregiver, or the detection signal may contain information usable by an automated system to control operation of the lumen-traveling device.

Various types of propelling mechanisms may be used to move the lumen-traveling device through the body lumen. Examples are provided in U.S. Pat. Nos. 5,337,732; 5,386,741; 5,662,587; and 6,709,388; and KASSIM, IRWAN; PHEE, LOUIS; NG, WAN S.; GONG, FENG; DARIO, PAOLO; MOSSE, CHARLES A. ("Locomotion Techniques for Robotic Colonoscopy"; IEEE ENGINEERING IN MEDICINE AND BIOLOGY MAGAZINE; bearing dates of May/June 2006 and 2006; pp. 49-56; IEEE); CHRISTENSEN, BILL ("Musclebot: Microrobot with a Heart"; Technovelgy.com; pp. 1-2; bearing a date of Feb. 27, 2004; located at http://www.technovelgy.com/ct/Science-Fiction-News.asp?NewsNum=46; printed on Sep. 12, 2006); ANANTHASWAMY, ANIL ("First robot moved by muscle power"; bearing a date of Feb. 27, 2004; pp. 1-3; New Scientist; located at http://www.newscientist.com/article.ns?id=dn4714; printed on Sep. 12, 2006); and FREITAS JR., ROBERT A. ("8.2.1.2 Arteriovenous Microcirculation"; "9.4.3.5 Legged Ambulation"; "9.4.3.6 Tank-Tread Rolling"; "9.4.3.7 Amoeboid Locomotion"; "9.4.3.8 Inchworm Locomotion"; "Nanomedicine Volume I: Basic Capabilities"; bearing a date of 1999; pp. 211-214, pp. 316-318; Landes Bioscience; Georgetown, Tex., USA); all of which are incorporated herein by reference in their entirety. The propelling mechanism of the lumen-traveling device may include one or more cilium-like or flagellum-like structures, for example, as described in U.S. Patent Application 2004/0008853; MATHIEU, J-B.; MARTEL, S.; YAHIA, L'H.; SOULEZ, G.; BEAUDOIN, G. ("MRI Systems as a Mean of Propulsion for a Microdevice in Blood Vessels"; bearing a date of 2003; pp. 3419-3422; IEEE); LU, ZHAO; MARTEL, SYLVAIN ("Preliminary Investigation of Bio-carriers Using Magnetotactic Bacteria"; Proceedings of the 28th IEEE EMBS Annual International Conference; bearing dates of Aug. 30, 2006-Sep. 3, 2006 and 2006; pp. 3415-3418; IEEE), and MARTEL, SYLVAIN ("Towards MRI-Controlled Ferromagnetic and MC-1 Magnetotactic Bacterial Carriers for Targeted Therapies in Arteriolocapillar Networks Stimulated by Tumoral Angiogenesis"; Proceedings of the 28th IEEE EMBS Annual International Conference; bearing dates of Aug. 30, 2006-Sep. 3, 2006 and 2006; pp. 3399-3402; IEEE), all of which are incorporated herein by reference. The propelling mechanism may include rollers or wheel-like structures, as shown in U.S. Pat. No. 7,042,184 and U.S. Patent Application 2006/0119304, both of which are incorporated herein by reference; screw-like structures, as disclosed in IKEUCHI, K.; YOSHINAKA, K.; HASHIMOTO, S.; TOMITA, N. ("Locomotion of Medical Micro Robot with Spiral Ribs Using Mucus"; Seventh International Symposium on Micro Machine and Human Science; bearing a date of 1996; pp. 217-222; IEEE), which is incorporated herein by reference; appendages capable of walking motion, as described, for example, in U.S. Pat. No. 5,574,347; CHRISTENSEN, BILL ("Musclebot: Microrobot with a Heart"; Technovelgy.com; pp. 1-2; bearing a date of Feb. 27, 2004; located at http://www.technovelgy.com/ct/Science-Fiction-News.asp?NewsNum=46; printed on Sep. 12, 2006) and MARTEL, SYLVAIN ("Fundamentals of high-speed piezo-actuated three-legged motion for miniature robots designed for nanometer-scale operations"; pp. 1-8), incorporated herein by reference, and others. Appendage-like structures may intermittently engage the lumen wall and push the structural element with respect to the lumen wall with a walking-type motion, or may push against fluid within the lumen in a paddling or swimming motion. In some embodiments, the propelling mechanism may drive rotational movement of a lumen-wall-engaging structure with respect to the structural element, e.g., as in turning of a wheel or a screw element to propel the structural element through a lumen. Propelling mechanisms may include mechanical or micromechanical structures driven by at least one motor, micromotor, or molecular motor, or by expansion or change in configuration of a shape change polymer or metal. A molecular motor may be a biomolecular motor that runs on a biological chemical such as ATP, kinesin, RNA polymerase, myosin dynein, adenosinetriphosphate synthetase, rotaxanes, or a viral protein.

FIG. **1** depicts an example of a lumen-traveling device that includes a propelling mechanism which drives rotational movement of a lumen-wall-engaging structure. Lumen-traveling device **10** may include a structural element **12** configured to fit within at least a portion of a body lumen **14**. The structural element **12** may include a lumen-wall-engaging portion **16**. Lumen-traveling device **10** may also include a propelling mechanism **20** capable of producing movement of the structural element **12** through a body lumen **14** in which the structural element is deployed. Here, propelling mechanism **20** includes two rotating wheels, the outer rims of which form lumen-wall-engaging portions **16**.

In several alternative approaches, two (or more) lumen-wall-engaging portions may engage the lumen walls intermittently. FIGS. **29A-29** E depict (in cross-section) an embodiment of a lumen-traveling device **1650** which includes a motion-arresting portion including a first lumen-wall-engaging structure **1652** on first portion **1654** of the lumen-traveling device, capable of at least intermittently engaging an inner surface **1658** of body lumen in which the lumen-traveling device **1650** is deployed. The device may also include at least one second lumen-wall-engaging structure **1660** on second portion **1662** of the lumen-traveling device, wherein the propelling mechanism produces lengthening and shortening of the distance, between the first lumen-wall-engaging structure **1652** and the second lumen-wall-engaging structure **1660** in coordination with alternate engagement of the first lumen-wall-engaging structure **1652** and the second lumen-wall-engaging structure **1660** with the inner surface **1658** of the body lumen in which the lumen-traveling device is deployed. In the present example, the lengthening and shortening of the distance between the first and second lumen-wall-engaging structures may take place in region **1664**, but in other embodiments, the distance between the first and second lumen-wall-engaging structures may change due to change in position of the lumen-wall-engaging structures, e.g., in limbs that move relative to each other to produce walking-type motion. Portions of the lumen-traveling device (e.g. end portion **1656**) may not change in length, in order to provide a stable location for mounting of control circuitry (not shown). The alternate engagement and disengagement of the lumen wall by the first and second lumen-wall-engaging structures may produce inchworm-type propulsion of the device through the body lumen. Lumen-traveling device **1650** includes a propelling mechanism capable of producing relative extension and retraction of the at least two lumen-wall-engaging structures (**1652** and **1660**) with respect to each other in combination with alternate engagement and disengagement

of the body lumen wall to produce inch-worm-like movement of the lumen-traveling stimulation device with respect to the body lumen wall. The embodiment of the lumen-traveling device depicted in FIGS. **29**A-**29**E has a tubular structure with a central lumen **1668**, to permit movement of fluid through the device. FIG. **29**A depicts lumen-traveling device in which lumen-wall-engaging structures **1652** and **1660** are extended to engage with inner surface **1658**. In FIG. **29**B, second lumen-wall-engaging structure **1660** has been retracted, and region **1664** shortened to cause movement of second portion **1662** of lumen-traveling device **1650** in the direction indicated by the arrow, to attain the configuration shown in FIG. **29**C. Second lumen-wall-engaging structure **1660** is then extended to engage inner surface **1658**, and first lumen-wall-engaging structure **1652** is retracted, to attain the configuration shown in FIG. **29**D. Then, as indicated in the arrow in FIG. **29**D, region **1664** is extend to move first portion **1654** of lumen-traveling device **1650** in the direction indicated by the arrow in FIG. **29**D. At the end of the movement cycle, lumen-traveling device **1650** has attained the configuration shown in FIG. **29**E. First lumen-wall-engaging structure **1652** may then be extended to engage inner surface **1658**, as depicted in FIG. **29**A. It will be appreciated that by repeating the motion cycle illustrated in FIGS. **29**A-**29**E, movement of the lumen-traveling device through the lumen may be accomplished. Various types of lumen-wall-engaging structures may be used in devices that produce inchworm-type motion, and in addition to lumen-wall-engaging structures that expand or extend, structures that engage the lumen wall through other mechanisms (for example, with suction mechanisms, adhesives, claws or hooks) may be used. Lumen-traveling devices that utilize an inchworm-type propulsion mechanism with suction mechanisms for engaging the surface of the heart are disclosed in PATRONIK, N. A.; OTA, T.; ZENATI, M. A.; RIVIERE, C. N. ("Improved Traction for a Mobile Robot Traveling on the Heart"; Proceedings of the 28th IEEE EMBS Annual International Conference; bearing dates of Aug. 30, 2006-Sep. 3, 2006 and 2006; pp. 339-342; IEEE); DARIO, P.; CARROZZA, M. C.; LENCIONI, L.; MAGNANI, B.; D'ATTANASIO, S. ("A Micro Robotic System for Colonoscopy"; Proceedings of the 1997 IEEE International Conference on Robotics and Automation; bearing dates of April 1997 and 1997; pp. 1567-1572; IEEE) and DONGXIANG, CHI; GUOZHENG, YAN ("An earthworm based miniature robot for intestinal inspection"; Proceedings of SPIE; bearing dates of Nov. 7, 2001-Nov. 9, 2001; pp. 396-400; Volume 4601; SPIE); all of which are incorporated herein by reference in their entirety.

Radially and longitudinally expanding or extending structures may be mechanical or micromechanical structures, expandable materials, inflatable structures, or shape-changing materials or structures. While reference is made to expandable and inflatable materials and structures here, and throughout the specification, it will be appreciated that structures that are specified as being expandable and inflatable may also be contractible or deflatable, and thus capable of reversible change in dimension. Reversible changes of dimension may be used in generating cyclical motions for propelling a lumen-traveling device. In some embodiments, expansion/contraction may force fluid out of the device to generate jet or vortex propulsion. Nevertheless, it is contemplated that, in some applications, materials and structures that change dimension in one direction (only expansion or only contraction) may be used.

FIGS. **30**A and **30**B depict the use of shape-changing structure for engagement of a lumen wall and extension of a body structure of a lumen-traveling device. In FIG. **30**A, lumen-traveling device **1700** includes shape-changing arc **1702**, which may have a curved configuration, as shown in FIG. **30**A, or an extended configuration as shown in FIG. **30**B. Such a change in configuration may be produced by heating of a bimetallic strip, or by the use of a shape memory material having at least two configurations, and may be used to provide lengthening and shortening of lumen-traveling device **1700**. Lumen-traveling device may include a first lumen-wall-engaging structure **1704** and second lumen-wall-engaging structure **1706**. First lumen-wall-engaging structure **1704** is formed from a strip of material formed into first and second loops **1708** and **1710**, respectively. In FIG. **30**A, first loop **1708** is small, and second loop **1710** is large, so that it engages lumen walls **1720**. Second lumen-wall-engaging structure **1706** is formed of first loop **1714** and second loop **1716**, which in FIG. **30**A are of medium size, so that neither engages lumen walls **1720**. First lumen-wall-engaging structure **1704** is connected to lumen-traveling device **1700** at mounting point **1712**, which includes a translational mechanism for moving first loop **1708** with respect to second loop **1712** to change the size of the two loops. Similarly, second lumen-wall-engaging structure **1706** is connected to lumen-traveling device **1700** at mounting point **1718**, which includes a translational mechanism for moving first loop **1714** with respect to second loop **1716** to change the size of the two loops. In FIG. **30**B, arc **1702** is extended, so that second lumen-wall-engaging structure **1706** has moved from point B (in FIG. **30**A) to point C (in FIG. **30**B). First loop **1714** of second lumen-wall-engaging structure **1706** has been reduced in size by a translational mechanism at mounting point **1718**, while second loop **1716** has been increased in size to engage lumen walls **1720**. Inchworm motion similar to that depicted in FIGS. **29**A-**29**E can thus be produced by an embodiment of lumen-traveling device as depicted in FIGS. **30**A and **30** B.

FIG. **31** depicts a further embodiment of a lumen-traveling device adapted to travel through the body lumen with a propelling mechanism that produces walking-type motion. The lumen-traveling device may include two or more lumen-wall-engaging structures on a portion of the lumen-traveling device capable of at least intermittently engaging an inner surface of a body lumen in which the lumen-traveling device is deployed, wherein the propelling mechanism drives walking movement of the two or more lumen-wall-engaging structures with respect to inner surface of the body lumen. Lengthening and shortening of the distance between the lumen-wall-engaging structures is produced by change in leg configuration rather than by lengthening or shortening of the main structure (e.g. body structure) of the lumen-traveling device. Lumen-traveling device **1750** includes a structural element **1751** sized to fit within a body lumen; at least two lumen wall-engaging structures operable to alternately engage and disengage a wall of the body lumen (in FIG. **31**, 6 lumen-wall-engaging structures **1752**, **1754**, **1756**, **1758**, **1760**, and **1762** are shown); a propelling mechanism capable of producing relative extension and retraction of the at least two lumen-wall-engaging structures with respect to each other in combination with alternate engagement and disengagement of the body lumen wall **1764** to produce movement of the lumen-traveling stimulation device with respect to the body lumen wall. Lumen-traveling device **1750** may also include motion control circuitry carried at least in part by the lumen-traveling device and configured to control the propelling mechanism to control movement of the lumen-traveling device through the body lumen; a sensor capable of detecting a condition of interest

in the body lumen; and an active portion carried by the structural element and configured to perform an action in response to detection of the condition of interest by the sensor, not shown in FIG. **31** but operating as described elsewhere herein. The at least two lumen-wall-engaging structures may include at least two appendages configured for walking motion. In the embodiment shown in FIG. **31**, legs **1752** and **1754** extend and retract with respect to each other, for example, so that as one leg swings forward, the other swings back. Larger or smaller numbers of legs, distributed in various patterns about the structural element, may be used to propel the lumen-traveling device through the body lumen, and the embodiment depicted in FIG. **31** represents one possible example.

Leg structures for lumen-traveling devices may be formed of various materials and structures, including nanotubes and nanotube bundles, carbon fibers and carbon fiber bundles, silicon, metal, polymers, and other materials as described herein. Legs may be moved to produce walking motion may be actuated by various mechanisms. In some embodiments the legs formed from shape-changing material may be moved through change in configuration of the leg structure itself, while in other embodiments the leg may have a substantially rigid or fixed configuration that may be moved by separate actuation mechanism. Shape-changing materials that may be used in leg structures or actuators may be of various types, for example, stacked piezoelectric elements, electroactive polymers, heat sensitive polymers, magnetic field responsive polymers, and ferromagnetic materials, as described elsewhere herein. In some embodiments, motors and actuators may be used to drive leg motion, as known to those of skill in the art.

In another embodiment of a propelling mechanism, as depicted in FIGS. **32** and **32**, multiple lumen-wall-engaging structures, operating in sequence to alternately engage and disengage the lumen wall, may be used to produce "peristaltic" motion of the lumen-traveling device. Examples of devices that produce this type of motion are described in U.S. Pat. No. 6,764,441; U.S. Patent Application 2006/0004395; MANGAN, ELIZABETH V.; KINGSLEY, DAN A.; QUINN, ROGER D.; CHIEL, HILLEL J.; "Development of a Peristaltic Endoscope"; IEEE International Conference on Robotics & Automation 2002; pp. 1-6; located at http://biorobots.cwru.edu/publications/ICRA02_Mangan_Endoscope.pdf; and MEIER, P.; OBERTHÜR, S.; LANG, M.; "Development of a compliant device for minimally invasive surgery"; Proceedings of the 28th IEEE EMBS Annual International Conference; bearing dates of Aug. 30, 2006-Sep. 3, 2006 and 2006; pp. 331-334; IEEE; all of which are incorporated herein by reference.

In FIGS. **32**A and **32**B, lumen-traveling device **1800** includes structural element **1802**, which may be formed of a resilient material. Structural element **1802** may be a substantially tubular structure with a central lumen **1816**, for example. A plurality of expanding or extending structures **1804**, **1806**, **1808**, **1810**, **1812**, **1814**, and **1818** may be positioned along the length of structural element **1802**. Expanding or extending structures may expand in a lengthwise direction as well as expanding in a radially outward direction. For example, in FIG. **32**A, expanding or extending structures **1804** and **1810** are shown in their expanded configurations, in which they are both wider and longer than in their contracted configurations as shown in FIG. **32**B. Conversely, expanding or extending structures **1806**, **1808**, **1812**, and **1814** are shown in the contracted configurations in FIG. **32**A, and in their expanded configurations in FIG. **32**B. By expanding and contracting the expanding or extending structures in sequence, as depicted in FIGS. **32**A and **32**B, movement of the lumen-traveling device through the body lumen may be accomplished.

In some embodiments, a propelling mechanism may be configured to drive movement of the lumen-traveling device along a wire, catheter, cannula, or tube within the body lumen. For example, as shown in FIG. **33**, lumen-traveling device **1850** moves along elongated structure **1852** (which may be, for example, a wire, catheter, cannula, tube or other structure) located within body lumen **1854**, surrounded by lumen walls **1856**. Lumen-traveling device **1850** includes body structure **1858**, retainer **1860**, and propelling mechanism **1862**. In the example depicted in FIG. **33**, retainer **1860** is a hook-like structure that holds lumen-traveling device **1850** against elongated structure **1852** while allowing it to move along elongated structure **1852**, while propelling mechanism **1862** causes lumen-traveling device **1850** to move along elongated structure **1852**. In the embodiment of FIG. **33**, propelling mechanism **1862** is a rotating wheel that moves lumen-traveling device **1850** along elongated structure **1852**, but in other embodiment, other propelling mechanisms may be used to move a lumen-traveling device along an elongated structure.

Finally, as noted elsewhere herein, in some embodiments, the lumen-traveling device may be propelled through the body lumen by one or more paddles, propellers, vortex generators, jets, flagellum-like structures, or the like, which push against fluid contained within the lumen rather than engaging the wall of the body lumen, e.g. as described in U.S. Pat. No. 6,240,312 or in BEHKAM, BAHAREH; SITTI, METIN; "TOWARDS HYBRID SWIMMING MICROROBOTS: BACTERIA ASSISTED PROPULSION OF POLYSTYRENE BEADS"; Proceedings of the 28th IEEE EMBS Annual International Conference; bearing dates of Aug. 30, 2006-Sep. 3, 2006 and 2006; pp. 2421-2424; IEEE; CHRISTENSEN, BILL; "Propulsion System for 'Fantastic Voyage' Robot", bearing a date of Nov. 10, 2006, printed on Jan. 4, 2007, located at http://technovelgy.com/ct/Science-Fiction-News.asp?NewsNum=811; or "Researchers: Squid-Inspired Vortex Generators Could Mean Better Propulsion for Unmanned Underwater Vehicles"; UnderwaterTimes.com; Dec. 12, 2006; pp. 1-2; printed on Jan. 4, 2007; located at http://www.underwatertimes.com/print.php?article_id=51030782641; or MOHSENI, KAMRAN; "Biomimemetic & Bio-Inspired Aerial and Underwater Vehicles"; bearing a date of Sep. 23, 2006; pp. 1-100 printed on Jan. 4, 2007, located at http://enstrophy.colorado.edu/~mohseni/MicroVehicles1.html#UUV1#UUV1 all of which are incorporated herein by reference.

The direction of movement produced by the various propelling mechanisms described herein may be reversed by simply reversing the operation of the propelling mechanisms.

In various embodiments as described herein, a lumen-traveling device may include a power source configured to provide power to at least one of the propelling mechanism, the motion control circuitry, the sensor, the response initiation circuitry, or the active portion. The power source may be a battery or microbattery, a fuel cell or biofuel cell, or a nuclear battery. One or more power sources of the same or different types may be included in the lumen-traveling device, without limitation. Batteries may be located on the lumen-traveling device, possibly a microbattery like those available from Quallion LLC (http://www.quallion.com) or designed as a film (U.S. Pat. Nos. 5,338,625 and 5,705,293), which are incorporated herein by reference. Alternatively,

the power source could be one or more fuel cell such as an enzymatic, microbial, or photosynthetic fuel cell or other biofuel cell (US2003/0152823A1; WO03/106966A2; or Chen T et al. J. Am. Chem. Soc. 2001, 123, 8630-8631, A Miniature Biofuel Cell, all of which are incorporated herein by reference), and could be of any size, including the micro- or nano-scale. In some embodiments, the power source may be a nuclear battery. The power source may be an energy-scavenging device such as a pressure-rectifying mechanism that utilizes pulsatile changes in blood pressure, for example, or an acceleration-rectifying mechanism as used in self-winding watches, or other types of flow-rectifying mechanism capable of deriving energy from other flow parameters. In some embodiments, the power source may be an electrical power source located remote from the structural element and connected to the structural element by a wire, or an optical power source located remote from the structural element and connected to the structural element by a fiber-optic line or cable. In some embodiments, the power source may be a power receiver capable of receiving power from an external source, for example, an acoustic source or electromagnetic source (e.g., infrared energy, or inductively coupled, as described in U.S. Pat. No. 6,170,485 or U.S. Patent Application No. 2005/0228259, which are incorporated herein by reference). In some embodiments, the power source may include an electrical power source located remote from the lumen-traveling device and connected to the lumen-traveling device by a wire, or an optical power source located remote from the lumen-traveling device and connected to the lumen-traveling device by an optical fiber.

In some embodiments, the lumen-traveling device may include a power transmitter capable of transmitting power from the lumen-traveling device to a secondary location. The power transmitter may be capable of transmitting at least one of acoustic power, electrical power, or optical power. The secondary location may be, for example, another device within the body, either in a body lumen or elsewhere, that includes a power receiver and structures for using, storing and/or re-transmitting the received power.

FIG. **34** is a block diagram depicting a further embodiment of a lumen-traveling device **1900**, which includes a motion-arresting portion **1902**; a fluid-contacting portion **1904** configured to contact fluid within the body lumen and to at least intermittently permit flow of fluid through the body lumen; a propelling mechanism **1906** capable of producing movement of the lumen-traveling device through a body lumen in which the lumen-traveling device is deployed; motion control circuitry **1908** carried at least in part by said lumen-traveling device and configured to control propelling mechanism **1906** to control movement of the lumen-traveling device through the body lumen; a sensor **1910** capable of detecting a condition of interest in the body lumen and generating a sense signal indicating detection of the condition of interest; response initiation circuitry **1912** operatively connected to sensor **1910** and configured to generate a response initiation signal upon receipt of the sense signal indicating detection of a condition of interest in the body lumen; and an active portion **1914** operatively connected to response initiation circuitry **1912** and capable of producing a response upon receipt of the response initiation signal. Motion control circuitry **1908** and response initiation circuitry **1912** make up part of control circuitry **1907**, which may also include other components not specifically described herein. The embodiment of FIG. **34** also includes a steering mechanism **1916** capable of modifying the direction of movement of the lumen-traveling device; wherein the motion control circuitry **1908** may be configured to control the steering mechanism **1916** to control movement of the lumen-traveling device through the body lumen. The embodiment of FIG. **34** may include power source **1918** configured to provide power to at least one of propelling mechanism **1906**, steering mechanism **1916**, motion control circuitry **1908**, sensor **1910**, response initiation circuitry **1912** or active portion **1914**. Components of the embodiment of FIG. **34** may be generally as described elsewhere herein. Steering mechanism **1916** may be any of various structures, depending on the type of propelling mechanism used. If the propelling mechanism is a paddle or propeller that causes the lumen-traveling device to move in the fluid in the lumen, the steering mechanism may be a rudder. If the propelling mechanism includes multiple wheels or limb-like structures, they may be activated differentially on different sides of the lumen-traveling device to steer it in one direction or another. In embodiments in which the lumen-traveling device contacts the lumen walls on all sides of the device, the steering mechanism may be used only in the cases that the lumen-traveling device encounters a branch point in the lumen, and once the front portion of the device (defined by the direction of travel) is steered to cause the device to enter a selected branch, the back portion of the device will follow without the need for additional steering.

Various embodiments of the lumen-traveling device may include a marker or tag. The marker or tag may be an imaging marker or tag detectable by a remote imaging system to indicate the position of the lumen-traveling device within the body of a subject (for example, a radio-opaque marker for x-ray imaging). Alternatively, the marker or tag may be detectable by a sensing device or structure within the body of the subject.

In some embodiments, as depicted in FIG. **35**, at least a portion of the circuitry that controls the operation of the lumen-traveling device **1950** may be located remote from the lumen-traveling device in remote portion **1972**, outside the body of the subject as shown in FIG. **28**, or at a location within the body of the subject at a distance from the lumen-traveling device. In the embodiment of FIG. **35**, lumen-traveling device **1950** includes a motion-arresting portion **1952**; a fluid-contacting portion **1954** configured to contact fluid within the body lumen and to at least intermittently permit flow of fluid through the body lumen; a propelling mechanism **1956** capable of producing movement of the lumen-traveling device through a body lumen in which the lumen-traveling device is deployed; motion control circuitry **1958** carried at least in part by said lumen-traveling device and configured to control propelling mechanism **1956** to control movement of the lumen-traveling device through the body lumen; a sensor **1960** capable of detecting a condition of interest in the body lumen and generating a sense signal indicating detection of the condition of interest; response initiation circuitry **1962** operatively connected to sensor **1960** and configured to generate a response initiation signal upon receipt of the sense signal indicating detection of a condition of interest in the body lumen; and an active portion **1964** operatively connected to response initiation circuitry **1962** and capable of producing a response upon receipt of the response initiation signal. The embodiment of FIG. **35** includes a steering mechanism **1966** capable of modifying the direction of movement of the lumen-traveling device; wherein the motion control circuitry **1958** may be configured to control the steering mechanism **1966** to control movement of the lumen-traveling device through the body lumen. At least a portion of the control circuitry for lumen-traveling device **1950**, remote circuitry **1974**, may be located remote from lumen-traveling device

1950 in remote portion 1972. Remote circuitry 1974 may include a remote portion of the motion control circuitry 1978 and remote portion of the response initiation circuitry 1980. Lumen-traveling device 1950 may include receiver/transceiver 1984 that may include data reception and/or transmission circuitry configured to receive a wireless control signal from the remote portion of the motion control circuitry 1978, transmitted from transceiver 1984. Data may be transmitted from lumen-traveling device 1950 to remote portion 1972. Remote portion 1972 may include a power source 1986. Alternatively, the motion control circuitry may be located in or on the lumen-traveling device. The embodiment of FIG. 35 may include power source 1968 configured to provide power to at least one of propelling mechanism 1956, steering mechanism 1966, motion control circuitry 1958, sensor 1960, response initiation circuitry 1962 or active portion 1964. Components of the embodiment of FIG. 35 may be generally as described elsewhere herein. Steering mechanism 1966 may be as described above in connection with FIG. 34. In some embodiments, power may be transmitted to lumen-traveling device 1950 from remote portion 1972.

The motion control circuitry may be operatively connected to the sensor, and configured to control at least one of steering mechanism or propelling mechanism to control the movement of the lumen-traveling device at least in part in response to receipt of the sense signal indicating detection of the condition of interest in the body lumen. Similarly, the response initiation circuitry may be located in or on the lumen-traveling device in some embodiments, while in other embodiments at least a portion of the response initiation circuitry may be located remote from the lumen-traveling device, wherein the lumen-traveling device may include data transmission and reception circuitry configured for communicating with the at least a portion of the response initiation circuitry located remote from the lumen-traveling device.

The control circuitry for the lumen-traveling device, located either on the lumen-traveling device or in a remote portion, and including response initiation circuitry and/or motion control circuitry, may include a microprocessor, and/or at least one of hardware, software, or firmware. Examples of devices and/or systems for communicating within devices in the body are provided in U.S. Pat. Nos. 5,843,139; 6,409,674; or 7,125,382; U.S. Patent Application 2002/0198604, and RICE, MIKE; "Implantable Neurostimulation Device Market Poised for Explosive Growth"; Future Fab International; Jan. 7, 2006; pp. 1-4; printed on Oct. 6, 2006; located at http://www.future-fab.com/documents.asp?d_ID=3725, all of which are incorporated herein by reference in their entirety.

Various embodiments of lumen-traveling devices as depicted and described herein may include a lumen-wall-engaging portion; a fluid-contacting portion configured to contact fluid within the body lumen and to at least intermittently permit flow of fluid through the body lumen; a propelling mechanism capable of producing movement of the lumen-traveling device through a body lumen in which the lumen-traveling device may be deployed; at least one sensor capable of detecting a condition of interest in the body lumen and generating a sense signal indicating detection of the condition of interest; motion control circuitry carried at least in part on said lumen-traveling device and configured to control the propelling mechanism at least in part based upon the sense signal; response initiation circuitry operatively connected to the sensor and configured to generate a response initiation signal upon receipt of the sense signal indicating detection of a condition of interest in the body lumen; and an active portion operatively connected to the response initiation circuitry and capable of producing a response upon receipt of the response initiation signal. A fluid contacting portion configured to contact fluid within the body lumen and at least intermittently permit flow of fluid through the body lumen is though to be a useful feature for lumen-traveling device used in lumens through which fluid travel, such as, for example, blood vessels, portions of the respiratory tract, digestive tract or CSF space. In some cases, blockage of flow may cause serious problems. Thus, lumen-traveling devices which are configured to permit the flow of fluid at least a portion of the time may be of value. For example, fluid may flow through a channel or lumen passing through the lumen-traveling device (e.g., as depicted in FIG. 1, 29, or 32), or past a lumen-traveling device that has an cross section that does not fill the cross-section of the lumen, as in FIG. 5A, 5E, 30A, 30B, or 33, for example.

As shown in various of the figures, a lumen-traveling device may include a power source configured to provide power to at least one of the propelling mechanism, the motion control circuitry, the sensor, the response initiation circuitry, or the active portion. The power source may be located on the lumen-traveling device, or (at least in part) on a remote portion as illustrated in FIG. 35, with power being transmitted to the lumen-traveling device.

A lumen-traveling device may include various types of sensing or information gathering devices or structures. A lumen-traveling device may include one or multiple sensors of the same or different types, which may include but are not limited to, pressure sensors, temperature sensors, flow sensors, viscosity sensors, shear sensors (e.g., for measuring the effective shear modulus of the fluid at a frequency or strain-rate), pH sensors, chemical sensors for determining the concentration of a chemical compound or species, optical sensors, acoustic sensors, biosensors, electrical sensors, magnetic sensors, clocks or timers. Examples of a variety of sensor which may be used in embodiments as described herein are provided in U.S. Pat. Nos. 5,522,394; 5,873,835; 6,053,837; 6,409,674; 6,111,520; 6,278,379; 6,475,639; 6,855,115, and U.S. Patent Applications 2005/0277839 and 2005/0149170, all of which are incorporated herein by reference. U.S. Pat. No. 6,802,811, which is included herein by reference, provides additional examples of sensing and/or monitoring. In some embodiments, an imaging device (e.g., a CCD array) may be operatively connected to lumen-traveling device, e.g. connected to the structural element.

An optical sensor may be configured to measure the optical absorption, optical emission, fluorescence, or phosphorescence of at least a portion of the fluid, for example. Such optical properties may be inherent optical properties of all or a portion of the fluid or tissue, or may be optical properties of materials added or introduced to the fluid, such as tags or markers for materials of interest. Optical sensing of materials in blood is described, for example, in KRUEGER, CURTIS; "New light on blood testing"; Oct. 20, 2006; pp. 1-2; St. Petersburg Times; printed on Dec. 24, 2006; located at http://www.sptimes.com/2006/10/20news_pf/Tampabav/New_light_on_blood_te.shtml, which is incorporated herein by reference.

A biosensor may detect materials including, but not limited to, a biological marker, an antibody, an antigen, a peptide, a polypeptide, a protein, a complex, a nucleic acid, a cell (and, in some cases, a cell of a particular type, e.g. by methods used in flow cytometry), a cell fragment, a cellular component, a platelet, an organelle, a gamete, a pathogen, a lipid, a lipoprotein, an alcohol, an acid, an ion, an immu-

nomodulator, a sterol, a carbohydrate, a polysaccharide, a glycoprotein, a metal, an electrolyte, a metabolite, an organic compound, an organophosphate, a drug, a therapeutic, a gas, a pollutant, or a tag. A biosensor may include an antibody or other binding molecule such as a receptor or ligand. As used herein a sensor may include a single sensor or an array of sensors, and is not limited to a particular number or type of sensors. A sensor might comprise, in part or whole, a gas sensor such as an acoustic wave, chemiresistant, or piezoelectric sensor, or perhaps an electronic nose. A sensor may be very small, comprising a sensor or array that is a chemical sensor ("Chemical Detection with a Single-Walled Carbon Nanotube Capacitor," Snow, E. S. et al., Science, Vol. 307, pp. 1942-1945, 2005), a gas sensor ("Smart single-chip gas sensor microsystem," Hagleitner, C. et al., Nature, Vol. 414, pp. 293-296, 2001), an electronic nose, a nuclear magnetic resonance imager ("Controlled multiple quantum coherences of nuclear spins in a nanometer-scale device", Go Yusa, 2005, Vol. 343: pp. 1001-1005, Nature). The foregoing references are incorporated herein by reference. Further examples of sensors are provided in The Biomedical Engineering Handbook, Second Edition, Volume I, J. D. Bronzino, Ed., Copyright 2000, CRC Press LLC, pp. V-1-51-9, and U.S. Pat. No. 6,802,811, both of which are incorporated herein by reference.

A sensor may be configured to measure various parameters, including, but not limited to, the electrical resistivity of fluid, tissue, or other material, the density or sound speed of a material, the pH, the osmolality, or the index of refraction of the fluid at least one wavelength. The selection of a suitable sensor for a particular application or use site is considered to be within the capability of a person having skill in the art. In some embodiments, a sensor may include some signal processing or pre-processing capability integrated therewith.

The condition of interest detected by the sensor may include an anatomical feature (for example, a branching point) that indicates proximity to a treatment target, or indicates the presence of the treatment target itself. The condition of interest may include a man-made structure, such as an implantable device of some sort, potentially including another lumen-traveling device. Alternatively, the condition of interest may include one or more of an electrical field, magnetic field, temperature, flow condition, time, location, pressure, pH, presence or concentration of a chemical compound or species.

A sensor may sense a wide variety of physical or chemical properties. In some embodiments, detecting a condition of interest may include detecting the presence (or absence) of a material or structure of interest.

In some applications, detecting a condition of interest in the fluid within the body lumen may include detecting the presence of a material of interest in the fluid within the body lumen. A material of interest in a fluid may include, for example, an object such as a blood clot, a thrombus, an embolus, a plaque, a lipid, a kidney stone, a dust particle, a pollen particle, an aggregate, a cell, a specific type of cell, a cell fragment, a cellular component, a platelet, an organelle, a collection or aggregation of cells or components thereof a gamete, a pathogen, or a parasite.

Lumen-traveling devices may be used in a number of different ways. In some embodiments, a lumen-traveling device may travel through the lumen performing an action at selected locations that are identified as the device travels through the lumen. A device may move through the body lumen performing "surveillance" for periods of time ranging from a few minutes, to hours, days, weeks, or years. When the lumen-traveling device identifies a location of interest (e.g., a location where some sort of medical treatment is needed), it may perform an action, which may include delivering a medical treatment, transmitting a signal indicating the need for medical treatment to a monitoring system, or recording information about the location of interest, for example. A lumen-traveling device performing surveillance in a body lumen may perform an action "on the fly" as it moves past the location of interest, or it may pause or cease moving at or near a location of interest in order to perform an action.

Sensors in combination with logic circuitry (hardware, firmware, and/or software) may be used to detect a condition of interest in or on the wall of the body lumen, in the tissue that forms or surrounds the body lumen, or in the fluid within the body lumen. A location of interest in a body lumen may include a location of anatomical interest (e.g., a branching point), a location near an organ, a tumor, an injury, etc, a diseased or damaged region (e.g. a fistula or aneurysm), area of scar tissue, a polyp, a blockage or constriction formed by a bacterial plaque, blood clot, or vasospasm, for example. Locations of interest may be detected by the detection of chemical markers or fingerprints, by altered mechanical, optical, thermal, electrical or acoustic properties, by imaging, and by other detection methods as known to those of skill in the art. The lumen-traveling device may perform one or more actions with an active portion in response to detection of a location of interest. Tissue condition can be detected with the use of pressure pulses, as described in U.S. Pat. No. 6,170,488 and U.S. Patent Applications 2003/0220556 and 2004/0225325, all of which are incorporated herein by reference.

In some embodiments, a lumen-traveling device may perform an action continuously or intermittently as it moves through a body lumen. Performance of the action may not necessarily always be associated with detection of a region of interest within a body lumen.

In some embodiments, a lumen-traveling device may move through a body lumen until it reaches a particular location and then cease traveling in order to reside, either temporarily or substantially permanently, at the location. At the location, it may perform an action on the local tissue forming the lumen or perform an action on fluid within the lumen, which may be flowing or moving in some other manner, either continuously or intermittently, or may be substantially unmoving. The location at which a lumen-traveling device stops and resides may be pre-selected, in which case the device may be targeted to the location. Alternatively, the location may be selected as the device is traveling through the lumen, based on one or more features of the location, which may be sensed by the device. Features of the location may include, but are not limited to, indicators of injuries, pathologies or disease conditions to be treated by the device, or anatomical characteristics (size, proximity to an organ or other structure, etc.) that make the location a suitable site for the device to be positioned. Features of locations of interest may include chemical, thermal, mechanical, optical, or other properties as may be sensed with various types of sensors as described elsewhere herein. A parameter may be measured at a single point in time/space or may be measured over multiple dimensions (spatial, temporal, or other—e.g. frequency) to generate an image of a region that may include features of interest. Signal processing to perform analysis of the signal or image may be used to detect features/locations of interest from signal or image.

In one application, a lumen-traveling device traveling within the male reproductive tract may detect pH, flow, or viscosity of semen, for example, and based upon the value of the detected parameter, may perform an action to alter it to either enhance fertility or provide contraception.

In some embodiments, the lumen-traveling device may be used to deliver treatment to a location that is relatively inaccessible by other means. For example, a lumen-traveling device may move through vasculature within the brain in order to access brain regions for delivery of drugs, therapeutics, chemotherapy agents, chemical mechanical, optical, electrical or magnetic stimuli, etc.

FIG. **36** shows steps of a method implemented with a lumen-traveling device. The method steps include propelling the lumen-traveling device through a body lumen at step **2002**; at least intermittently permitting flow of fluid through the body lumen and past a fluid-contacting portion of the lumen-traveling device at step **2004**; detecting a condition of interest with a sensor on the lumen-traveling device at step **2006**; producing a response initiation signal with response initiation circuitry located at least in part on the lumen-traveling device at least partially in response to detection of the condition of interest at step **2008**; and performing an action with an active portion of the lumen-traveling device in response to the response initiation signal at step **2010**.

FIG. **37** shows further variants of the method of FIG. **36**. The method may include propelling the lumen-traveling device through a body lumen at step **2052**; at least intermittently permitting flow of fluid through the body lumen and past a fluid-contacting portion of the lumen-traveling device at step **2054**; detecting a condition of interest with a sensor on the lumen-traveling device at step **2056**; producing a response initiation signal with response initiation circuitry located at least in part on the lumen-traveling device at least partially in response to detection of the condition of interest at step **2058**; and performing an action with an active portion of the lumen-traveling device in response to the response initiation signal at step **2060**. In addition, propelling the lumen-traveling device through the body lumen may include propelling the lumen-traveling device with sufficient force to push open a closed body lumen, as shown in step **2064**. The step of detecting a condition of interest may include detecting a fluid flow, as shown in step **2066**, detecting fluid viscosity as shown in step **2068**, or detecting a fluid shear, as shown in step **2070**.

FIG. **38** shows further variants of the method of FIG. **36**. Again, the method may include propelling the lumen-traveling device through a body lumen at step **2102**; at least intermittently permitting flow of fluid through the body lumen and past a fluid-contacting portion of the lumen-traveling device at step **2104**; detecting a condition of interest with a sensor on the lumen-traveling device at step **2106**; producing a response initiation signal with response initiation circuitry located at least in part on the lumen-traveling device at least partially in response to detection of the condition of interest at step **2108**; and performing an action with an active portion of the lumen-traveling device in response to the response initiation signal at step **2110**. In addition, the method may include performing the action with the active portion of the lumen-traveling device in response to the response initiation signal while propelling the lumen-traveling device through the body lumen, as shown in step **2114**. Alternatively, the method may include performing the action with the active portion of the lumen-traveling device in response to the response initiation signal subsequent to stopping movement of the lumen-traveling device in the vicinity of the condition of interest, as shown in step **2116**.

FIGS. **39**A and **39**B show further variations of the method of FIG. **36**. The basic steps of the method include propelling the lumen-traveling device through a body lumen at step **2152**; at least intermittently permitting flow of fluid through the body lumen and past a fluid-contacting portion of the lumen-traveling device at step **2154**; detecting a condition of interest with a sensor on the lumen-traveling device at step **2156**; producing a response initiation signal with response initiation circuitry located at least in part on the lumen-traveling device at least partially in response to detection of the condition of interest at step **2158**; and performing an action with an active portion of the lumen-traveling device in response to the response initiation signal at step **2160**. Detecting a condition of interest with a sensor on the lumen-traveling device may include detecting a concentration of a chemical compound or species (at step **2164**), detecting an optical parameter (at step **2166**), detecting an acoustic parameter (at step **2168**), detecting a biomolecule with a biosensor (at step **2170**), detecting an electrical parameter (at step **2172**), detecting a magnetic parameter (at step **2174**), detecting a pressure in the body lumen (at step **2176**), or detecting a temperature in the body lumen (at step **2178**), as shown in FIG. **39**A, or, as shown in FIG. **39**B, detecting a pH in the body lumen (at step **2180**), detecting an anatomic feature (at step **2182**), detecting a location (at step **2184**), detecting a man-made structure (at step **2186**), or detecting a time (at step **2188**). If a man-made structure is detected, as at step **2186**, the method may include the steps of delivering a material or structure to the man-made structure (at step **2190**), receiving a material or structure from the man-made structure (at step **2192**), or collecting the man-made structure (at step **2194**). This may, for example, involve connecting to the man-made structure so that it can be pushed or pulled by the lumen-traveling device, or may involve taking up the man-made structure to be contained in or carried within the lumen-traveling device.

Steps **40**A-**40**E show further variants of a method as described generally in FIG. **36**. Again, the method may include propelling the lumen-traveling device through a body lumen at step **2252**; at least intermittently permitting flow of fluid through the body lumen and past a fluid-contacting portion of the lumen-traveling device at step **2254**; detecting a condition of interest with a sensor on the lumen-traveling device at step **2256**; producing a response initiation signal with response initiation circuitry located at least in part on the lumen-traveling device at least partially in response to detection of the condition of interest at step **2258**; and performing an action with an active portion of the lumen-traveling device in response to the response initiation signal at step **2260**. As shown in FIG. **40**A, the step of performing an action with the active portion (at step **2260**) may include transmitting a signal to a remote location (at **2264**), releasing a material (at step **2266**), which may be, for example, at least one of an adhesive, a filler, a hydrogel, an antibiotic, a pharmaceutical compound, a nutrient, a hormone, a growth factor, a medication, a therapeutic compound, an enzyme, a protein, a genetic material, a cell, a fraction of a cell, a vaccine, a vitamin, a neurotransmitter, a neurotropic agent, a neuroactive material, a cytokine, a cell-signaling material, a pro-apoptotic agent, an anti-apoptotic agent, an immunological mediator, an anti-inflammatory agent, a salt, an ion, an antioxidant, an imaging agent, a labeling agent, a diagnostic compound, a nanomaterial, an inhibitor, or a blocker (as indicated at step **2268**). Alternatively, as shown in FIG. **40**B, performing an action with the active portion may include collecting a material from the body lumen (as shown in step **2270**), which may include

collecting a sample from a fluid within the body lumen (as shown in step **2272**), or collecting a sample from a wall region of the body lumen (as shown in step **2274**). Alternatively, the method may include collecting a sample from beyond the wall region of the body lumen, e.g., with the use of a needle to penetrate the body lumen wall and/or utilizing a permeation enhancer.

In some versions of the method, as shown in FIG. **40**B, performing an action with the active portion may include producing heating or cooling, as shown in steps **2276** and **2282**, respectively. Heating may be used in a variety of locations, for a variety of purposes. In one example, the method may include propelling the lumen-traveling device through the body lumen to a location in the vicinity of the preoptic area, wherein performing an action with the active portion may include producing heating in the vicinity of the preoptic area, as shown in step **2278**. In another example, heating may be used in the male reproductive system to destroy gametes, as shown in step **2280**. In another example (not shown), heating may be used for ablation of tissue. In addition, or alternatively, performing an action with the active portion may include securing the lumen-traveling device into position within the body lumen as shown in step **2284**, e.g., by using various positioning or lumen-wall-engaging structures.

As shown in FIG. **40**C, in some embodiments, performing an action with the active portion may include emitting electromagnetic radiation, as shown at step **2286**. The action may include emitting ultraviolet, infrared, optical, microwave, or millimeter wave electromagnetic radiation, as indicated at steps **2288**, **2290**, **2292**, **2294**, and **2296**, respectively. Alternatively, as shown in step **2298** of FIG. **40**D, performing an action with the active portion may include emitting acoustic energy, including, but not limited to, ultrasonic acoustic energy, as indicated in step **2300**. As shown in FIG. **40**D, performing an action with the active portion may include applying pressure to the body lumen (step **2302**), by expansion of the active portion, or by release of a gas or fluid. In other embodiments, performing an action with the active portion may include modulating the flow of fluid through at least a portion of the body lumen, as shown at step **2304**, for example by blocking the flow of fluid through at least a portion of the body lumen (step **2306**), modifying the direction of flow of fluid through at least a portion of the body lumen (**2308**), or modifying the amount of turbulent flow (step **2310**). Modifying the direction of flow of fluid may include directing flow, toward a particular region and/or into a particular branch of a branching lumen, for example, with the use of various flow-directing structures as disclosed herein. Modifying the direction of flow of fluid may also include reversing the direction of flow, which may be accomplished, for example, by modifying the pressure within the lumen, as described herein.

As shown in FIG. **40**E, in some embodiments, performing an action with the active portion at step **2260** may include at least partly removing specific components from at least a portion of a fluid within the body lumen, as shown at step **2312**, or activating at least one catalyst, as shown at step **2314**. In still other embodiments, performing an action with the active portion may include generating an electric field, as shown at step **2316**, generating a magnetic field, as shown at step **2318**, or scraping or cutting at least a portion of the body lumen, as indicated at steps **2320** and **2322**, respectively. Performing an action with the active portion may include releasing a man-made structure from the lumen-traveling device, as shown at step **2324**, and, in some embodiments, attaching the man-made structure to a wall of the body lumen, as shown at step **2326**. As shown in FIG. **40**F, performing an action with the active portion at step **2260** may include delivering a material or structure to a receiving portion of a man-made device, as shown at **2328**, receiving a material or structure from a delivery portion of a man-made device, as shown at **2330**. Finally, the method may include one or more of transmitting power to the lumen-traveling device, as shown in step **2332**, transmitting a signal to the lumen-traveling device, as shown in step **2334**, receiving a signal from a remote source with the lumen-traveling device, as shown in step **2336**, or receiving power from a remote source with the lumen-traveling device, as shown in step **2338**.

A lumen-traveling device as described herein may include control circuitry for controlling various aspects of the operation of the device. Lumen-traveling devices and systems as described herein may be operated under the control of control circuitry, which may include hardware, software, firmware, or a combination thereof.

FIG. **41** is a block diagram illustrating in greater detail various circuitry components of a lumen-traveling system. As discussed elsewhere herein, the circuitry components may be located entirely on the structural element of a lumen-traveling device, or may be distributed between the lumen-traveling device and a remote portion. The lumen-traveling system may include one or more sensors **2400** for measuring or detecting a condition of interest. Sensing circuitry **2402** may be associated with sensors **2400**. The lumen-traveling system may include various control circuitry **2404**, including response initiation circuitry **2406**. Response initiation circuitry **2406** may provide a response initiation signal to active portion **2408**. Control circuitry **2404** may also include data storage portion **2412**, which may, for example, be used to store pattern data **2414** or pattern variables **2416** for determining an activation pattern of active portion **2408**. Data storage portion **2412** may also store positional information, including, for example, the current device position or the position of one or more target locations or landmarks, or a map of some or all of the relevant body lumen(s) of the subjects. In some embodiments, control circuitry **2404** may include motion control circuitry **2418** for controlling propelling mechanism **2420**, and optionally steering mechanism **2422**. Control circuitry may include transceiver circuitry **2424**, which provides for the transmission and reception of data and/or power signals between the lumen-traveling device and one or more remote portion or external devices (e.g., monitoring or recording equipment). A user input portion **2426** may provide for the input of user instructions, parameter, etc. to control circuitry **2404**. Finally, one or more power source **2428** may provide power to electrical components of the lumen-traveling system. Some components of the lumen-traveling device may be operated in whole or in part under software control, and control circuitry **2404** may include hardware, software, hardware, or various combinations thereof. The lumen-traveling device may include components that may be primarily hardware-based, e.g., sensor **2400**, active portion **2408**, propelling mechanism **2420**, steering mechanism **2422**, and, optionally, user input device **2426**. Hardware-based devices may include components that are electrical, mechanical, chemical, optical, electromechanical, electrochemical, electro-optical, and are not limited to the specific examples presented herein. As described elsewhere, in some embodiments, portions of the control circuitry, including, for example, the response initiation circuitry, may be located in

or on the structural element, while in other embodiments the response initiation circuitry may be at a location remote from the structural element.

In many embodiments, the control circuitry as depicted in FIG. **41** may be implemented in the form of logic, for example software or digital logic circuitry. FIG. **42** depicts modules of logic (which may be software or hardware) which may be used in the control of lumen-traveling devices as described herein. As shown in FIG. **42**, logic **2500** for controlling a lumen-traveling device, may include, for example, a sensing module **2502** capable of processing an input from a sensor **2504** on the lumen-traveling device to generate a sense signal indicating detection of a condition of interest in a body lumen of an organism; a response initiation module **2506** capable of receiving the sense signal from the sensing module **2502** and based at least in part upon the sense signal generating a response initiation signal configured for causing an action to be performed in the body lumen by an active portion **2508** of the lumen-traveling device; and a motion control module **2510** capable of controlling at least one of a propelling mechanism **2512** or a steering mechanism **2514** on the lumen-traveling device to control direction or rate of movement of the lumen-traveling device through the body lumen. The logic may be implemented in digital circuitry, analog circuitry, software, or combinations thereof. The motion control module **2510** may be capable of receiving the sense signal from the sensing module **2502** and controlling at least one of the propelling mechanism **2512** or the steering mechanism **2514** on the lumen-traveling device based at least in part upon the sense signal. In one alternative embodiment, as shown in FIG. **43**, the motion control **2510** module may be capable of controlling at least one of the propelling mechanism **2512** or steering mechanism **2514** on the lumen-traveling device based at least in part upon a motion control signal from a remote portion **2520**. Otherwise, the logic **2550** is like that shown in FIG. **42**, including sensing module **2502** capable of processing an input from a sensor **2504** on the lumen-traveling device to generate a sense signal indicating detection of a condition of interest in a body lumen of an organism; a response initiation module **2506** capable of receiving the sense signal from the sensing module **2502** and based at least in part upon the sense signal generating a response initiation signal configured for causing an action to be performed in the body lumen by an active portion **2508** of the lumen-traveling device; and a motion control module **2510** capable of controlling at least one of a propelling mechanism **2512** or a steering mechanism **2514** on the lumen-traveling device to control direction or rate of movement of the lumen-traveling device through the body lumen. In another related embodiment, motion control module **2510** may be capable of controlling at least one of propelling mechanism **2512** or the steering mechanism **2514** on the lumen-traveling device based at least in part upon a pre-programmed motion pattern, for example a motion pattern stored in a data storage location **2412** as data storage location **2412** in FIG. **41**. In some embodiments, sensing module **2502** may be capable of generating a sense signal indicating the presence or absence of the condition of interest, wherein response initiation module **2506** may be capable of generating a response initiation signal configured for initiating the performance of the action in the body lumen by active portion **2508** of the lumen-traveling device. Response initiation module **2506** may include control logic that uses a pre-programmed pattern which may be stored in a memory location on the lumen-traveling device (again, like data storage location **2412** in FIG. **41**).

In some embodiments, sensing module **2502** may be capable of generating a sense signal indicating the presence or absence of the condition of interest, and response initiation module **2506** may be capable of generating a response initiation signal configured for controlling the performance of the action in the body lumen by the active portion of the lumen-traveling device in a pre-programmed pattern. In some embodiments, the sensing module may be capable of generating a sense signal indicating a parameter value of the condition of interest, wherein the response initiation module may be capable of generating a response initiation signal configured for initiating the performance of the action in the body lumen by the active portion **2508** of the lumen-traveling device as a function of the parameter value of the condition of interest. In addition, response initiation module **2506** may in some embodiments be capable of generating a response initiation signal configured for controlling the action by the active portion **2508** of the lumen-traveling device for a period of time as a function of the parameter value of the condition of interest. In some embodiments, sensing module **2502** may be capable of generating a time-varying sense signal indicating a time-varying parameter value of the condition of interest, wherein the response initiation module **2506** may be capable of generating a response initiation signal configured for controlling active portion **2508** of the lumen-traveling device as a function of the time-varying sense signal.

FIG. **44** illustrates a method of using a lumen-traveling device, which includes moving a self-propelling lumen-traveling device through a body lumen at step **2602**; at least intermittently permitting flow of fluid through the body lumen and past a fluid-contacting portion of the lumen-traveling device at step **2604**; detecting a treatment target based at least in part upon detection of a condition of interest in the body lumen with a sensor on the lumen-traveling device at step **2606**; producing a response initiation signal at least in part in response to detection of the condition of interest with response initiation circuitry located at least in part on the lumen-traveling device at step **2608**; and delivering a treatment to the treatment target with an active portion of the lumen-traveling device in response to the response initiation signal at step **2610**.

FIG. **45** shows an expanded version of the method of FIG. **44**, including the steps of moving a self-propelling lumen-traveling device through a body lumen at step **2652**; at least intermittently permitting flow of fluid through the body lumen and past a fluid-contacting portion of the lumen-traveling device at step **2654**; detecting a treatment target based at least in part upon detection of a condition of interest in the body lumen with a sensor on the lumen-traveling device at step **2656**; producing a response initiation signal at least in part in response to detection of the condition of interest with response initiation circuitry located at least in part on the lumen-traveling device at step **2658**; and delivering a treatment to the treatment target with an active portion of the lumen-traveling device in response to the response initiation signal at step **2660**, and also including a further step **2664** of stopping movement of the lumen-traveling device through the body lumen upon detection of the treatment target and delivering the treatment to the treatment target with the active portion of the lumen-traveling device while the lumen-traveling device may be substantially immobile in the body lumen. A further method step **2666** may include resuming movement of the lumen-traveling device through the body lumen following delivery of the treatment to the treatment target with the active portion of the lumen-traveling device.

FIG. **46** shows a further variation of the method of FIG. **44**, including moving a self-propelling lumen-traveling device through a body lumen at step **2702**; at least intermittently permitting flow of fluid through the body lumen and past a fluid-contacting portion of the lumen-traveling device at step **2704**; detecting a treatment target based at least in part upon detection of a condition of interest in the body lumen with a sensor on the lumen-traveling device at step **2706**; producing a response initiation signal at least in part in response to detection of the condition of interest with response initiation circuitry located at least in part on the lumen-traveling device at step **2708**; and delivering a treatment to the treatment target with an active portion of the lumen-traveling device in response to the response initiation signal at step **2710**, where delivering the treatment to the treatment target may include delivering the treatment to the treatment target as the lumen-traveling device moves past the treatment target, as shown in step **2712**.

In some embodiments of methods as illustrated in FIGS. **44**, **45**, and **46**, a method of using a lumen-traveling device may include delivering the treatment to the treatment target with an active portion of the lumen-traveling device, wherein the treatment may be determined based at least in part upon at least one sensed parameter of the treatment target. In other embodiments, the treatment may be determined at least in part by a treatment pattern stored in the lumen-traveling device.

In some cases, the treatment target may include at least a portion of a wall of the body lumen, or in some cases, the treatment target may lie beyond the wall of the body lumen, so that delivering a treatment to the treatment target with an active portion of the lumen-traveling device in response to the response initiation signal may include delivering a treatment to the treatment target through a wall of the body lumen. In some cases, the treatment target may include at least a portion of the contents of the body lumen.

A further method of using a lumen-traveling device, as outlined in FIG. **47**, may also include emplacing the lumen-traveling device in the body lumen by inserting a catheter carrying the lumen-traveling device into the body lumen and releasing the lumen-traveling device from the catheter, at step **2752**, followed by the steps of moving a self-propelling lumen-traveling device through a body lumen at step **2754**; at least intermittently permitting flow of fluid through the body lumen and past a fluid-contacting portion of the lumen-traveling device at step **2756**; detecting a treatment target based at least in part upon detection of a condition of interest in the body lumen with a sensor on the lumen-traveling device at step **2758**; producing a response initiation signal at least in part in response to detection of the condition of interest with response initiation circuitry located at least in part on the lumen-traveling device at step **2760**; and delivering a treatment to the treatment target with an active portion of the lumen-traveling device in response to the response initiation signal at step **2762**. A method of using a lumen-traveling device may optionally include retrieving the lumen-traveling device from the body lumen by inserting a catheter into the body lumen and withdrawing the catheter from the body lumen carrying the lumen-traveling device, for example as shown in step **2764** of FIG. **47**.

In some embodiments of a method of using a lumen-traveling device, as shown in FIGS. **48**A-**48**C, a primary lumen-traveling device **2802** and a secondary lumen-traveling device **2810** may be used. In some embodiments of a method, e.g., as outlined in FIG. **44**, the self-propelling lumen-traveling device may be a secondary lumen-traveling device **2810**, and the method may include emplacing secondary lumen-traveling device **2810** in the body lumen by releasing the secondary lumen-traveling device **2810** from a primary lumen-traveling device **2802**. In FIG. **48**A, primary lumen-traveling device **2802** is located in body lumen **2800** near branch point **2804**, where body lumen **2800** branches into smaller branch lumens **2806** and **2808**. Secondary lumen-traveling device **1820** is carried by primary lumen-traveling device **2802**, attached by retaining portions **2812** and **2814**. Primary lumen-traveling device **2802** is propelled through body lumen **2800** (in this example, with lumen-wall-engaging structures **2816**, **2818**, **2820**, and **2821**). As shown in FIG. **48**B, when primary lumen-traveling device **2802** reaches branch point **2804**, it may stop and release secondary lumen-traveling device **2810**. Secondary lumen-traveling device **2810** may be smaller than the primary lumen-traveling device **2802**, for example to permit it to travel into a smaller body lumen than the primary lumen-traveling device will fit into, such as branch lumen **2806**. Secondary lumen-traveling device **2810** may include lumen-wall-engaging structures **2822**, **2824**, **2826**, and **2828**, which operate to propel it down branch lumen **2806** and away from primary lumen-traveling device **2802**. As illustrated in FIG. **48**C, primary lumen-traveling device may leave branch point **2804** after releasing secondary lumen-traveling device **2810**.

Primary lumen-traveling device **2802** and secondary lumen-traveling device **2810** may be substantially similar in design, but of different sizes, as depicted in FIGS. **48**A-**48**C. In some embodiments of a method as outlined in FIG. **44**, a self-propelling lumen-traveling device (as recited in the method of FIG. **44**) may be a primary lumen-traveling device as depicted in FIG. **48**, and the method may include emplacing a secondary lumen-traveling device in the body lumen by releasing the secondary lumen-traveling device from the primary lumen-traveling device. As depicted in FIG. **48**, the secondary lumen-traveling device may be smaller than the primary lumen-traveling device.

FIG. **49** shows a method which includes moving a self-propelling lumen-traveling device through a body lumen at step **2902**; at least intermittently permitting flow of fluid through the body lumen and past a fluid-contacting portion of the lumen-traveling device at step **2910**; detecting a treatment target based at least in part upon detection of a condition of interest in the body lumen with a sensor on the lumen-traveling device at step **2912**; producing a response initiation signal at least in part in response to detection of the condition of interest with response initiation circuitry located at least in part on the lumen-traveling device at step **2914**; and delivering a treatment to the treatment target with an active portion of the lumen-traveling device in response to the response initiation signal at step **2916**. In addition, the method of FIG. **49** may include moving the lumen-traveling device through the body lumen at least partially under control of a remote portion, e.g., of the type illustrated in FIG. **35**, as indicated at step **2904**. For example, a motion control signal may be transmitted to the lumen-traveling device with the remote portion. The motion control signal may be generated with the remote portion. The motion control signal may be received from a remote portion with a signal receiver in the lumen-traveling device. The method may also include transmitting a signal indicative of detection of a condition of interest from the lumen-traveling device to a remote location, or transmitting a signal indicative of performance of an action by the lumen-traveling device to a remote location.

Alternatively, as shown in FIG. **49**, step **2906**, a method of using a lumen-traveling device may include controlling movement of the lumen-traveling device through the body lumen with a steering control portion on the lumen-traveling device. It should be noted that in some embodiments, propulsion may be provided without steering. In some embodiments, movement of the lumen-traveling device through the body lumen may be controlled based at least in part upon a detected condition of interest in the body lumen, controlled based at least in part on the use of logic circuitry included in the lumen-traveling device, and/or controlled based at least in part on a movement pattern stored in the lumen-traveling device. In another alternative, the lumen-traveling device may be moved through the body lumen in a substantially random or pseudo-random pattern, as indicated in FIG. **49**, step **2908**.

In this and other embodiments of methods disclosed herein, detecting a condition of interest may include detecting a variety of conditions, including but not limited to, an embolism, a plaque, a thrombus, an aneurysm, a stenosis, a puncture, a perforation, a rupture, a dissection, a tear, or a branching point in the body lumen, the branching point including at least two branches of the body lumen. The term "condition", as used herein, may refer to normally occurring anatomic features, man-made or other foreign structures, features, or conditions, disease states or injuries that may be present in a lumen by chance or purpose, and various detectable or measurable characteristics or parameters that indicate the presence of such conditions or features. In some embodiments, the method may include detecting a branching point in the body lumen, the branching point including at least two branches of the body lumen; the method may then also include steering the lumen-traveling device into a selected one of the at least two branches of the body lumen.

Several additional examples of embodiments of lumen-traveling devices are now provided, to further illustrate use of lumen-traveling devices as described herein.

FIGS. **50**A and **50**B depict lumen-traveling device **3000** moving through a body lumen **3002**. Lumen-traveling device **3000** includes sensor **3006**, response initiation circuitry **3010**, and active portion **3012**. Lumen-traveling device **3000** also includes motion control circuitry **3014**. As shown in FIG. **50**A, sensor **3000** detects a location of interest—in this case, material **3008** on the wall **3004** of body lumen **3002**. Material **3008** may be, for example, a plaque on the wall of an artery. Sensor **3006** may be an optical sensor, an imaging device, or various other types of sensors, as are known to those of skill in the art. Upon detection of material **3008**, active portion **3012** may be an activated, as shown in FIG. **50**B. In this example active portion **3012** performs ablation of material **3008**; for example, active portion **3012** may be an optical device which generates light to perform, for example, laser ablation of a plaque, or it may be an acoustic device for performing ultrasonic ablation of a plaque.

FIGS. **51**A and **51**B depict a lumen-traveling device **3050** moving through a lumen **3052** that is constricted, e.g. by a vasospasm. Lumen **3052** is defined by lumen walls **3054**, which at vasospasm **3056** are constricted, blocking the flow of fluid through the lumen. Lumen-traveling device **3050** includes sensor **3058**, which detects the presence of the vasospasm, for example, by detecting reduced flow of fluid through the body lumen. Lumen-traveling device **3050** also includes material release structure **3060**, which may be activated in response to detection of vasospasm **3056**, to release a vasoactive substance **3064** to produce relaxation of the vasospasm, as illustrated in FIG. **51**B. Lumen-traveling device **3050** may also include propelling mechanism **3062**, as well as other components not depicted in FIGS. **51**A and **51**B, but as described elsewhere herein.

FIGS. **52**A and **52**B illustrate a further example of a lumen-traveling device **3100** traveling through a body lumen **3102**. Body lumen **3102** includes an aneurysm **3104**, which may be detected by sensor **3106** on lumen-traveling device **3100**. A sense signal generated by sensor **3106** causes response initiation circuitry **3108** to cause activation of active portions **3110** and **3112** to engage walls **3114** of body lumen **3102** to seal off aneurysm **3104** and cause fluid to flow through central lumen **3116** of lumen-traveling device **3100**, rather than into aneurysm **3104**.

FIGS. **53**A and **53**B illustrate the treatment of a fluid flowing through a lumen-traveling device **3150** positioned in a body lumen **3152**. The lumen-traveling device **3150** may move to a location of interest through the use of propelling mechanism **3157**, for example, and then engage the lumen walls to remain in the location of interest and treat fluid moving through it. Alternatively, lumen-traveling device **3150** may treat fluid as it moves through body lumen **3152**, including fluid residing in or flowing through the lumen-traveling device. Body lumen **3152** is defined by wall portions **3154**. In FIG. **53**A, component **3164** of fluid flowing through body lumen **3152** is detected by sensor **3158** in structural element **3156** of lumen-traveling device **3150**. Upon detection of component **3164** by sensor **3158**, a sense signal **3159** is sent to response initiation circuitry **3160**, which generates a response initiation signal **3161**. Response initiation signal **3161** is sent to active portion **3162**. As shown in FIG. **53**B, upon receipt of response initiation signal **3161**, active portion **3162** produces a response or action, which in this example is a pulse of energy (e.g. acoustic energy) to destroy component **3164** (indicated following destruction by reference number **3164'**). For example, a pulse of acoustic energy may be used to modify a kidney stone in the urinary tract, or to modify another object in another body fluid.

In connection with detection of the presence of a material, location, or other condition(s) of interest within or near the body lumen or the lumen contents, the active portion of the lumen-traveling device or system may be capable of removing, modifying, or destroying a material of interest or treating a location of interest. Modification or destruction of the material of interest may be accomplished by the release of a suitable material (e.g. an anti-coagulant for destroying a blood clot, complement to coat a parasite for recognition by the immune system, or by the release of an anti-inflammatory, biomimetic or biologic to bind to and inactivate an inflammatory mediator such as TNFα, by the delivery of suitable energy (e.g., acoustic energy for modifying a kidney stone, electromagnetic energy such as light to cause a photoreaction, break bonds in a molecule, produce heating, vaporization, ablation, etc., or by delivery of heat or cold or other chemo-physical change (e.g. ambient pressure, pH, osmolality, toxic material introduction/generation) for tissue modification, as in ablation of circulating tumor cells or plaque or temperature-induced modification of sperm as it passes through the vas deferens.

In some embodiments of lumen-traveling devices or systems, a lumen-traveling device may be a self-contained device that includes all functionalities necessary for operation of the device. In other embodiments, as illustrated in FIG. **28**, **35** or **43**, a lumen-traveling system may include a lumen-traveling device that may be placed in a body lumen, and a remote portion that includes a portion of the functionalities of the lumen-traveling system. In some embodiments,

all functionalities essential for the operation of the lumen-traveling device may be located on the lumen-traveling device, but certain auxiliary functions may be located in the remote portion. For example, the remote portion may provide monitoring of the operation of the lumen-traveling device or data collection or analysis. The remote portion may be located within the body of the subject at a distance from the lumen-traveling device, or outside the body of the subject, as depicted in FIG. **28**. The remote portion may be located near the subject (e.g., carried or worn on the subject's body or placed on a table near the subject) or distant from the subject (e.g. in a different room or building, or in a different city, state or country). Data and/or power signals may be transmitted between lumen-traveling device and remote portion with the use of electromagnetic or acoustic signals, or, in some embodiments, may be carried over electrical or optical links. Various types and/or combinations of types of communications methods and devices may be used, as are known to those of skill in the art. In some embodiments, transmission of information between the lumen-traveling device and one or more remote portions may be via multiple communication channels, in series or in parallel. In general, the remote portion may be placed in a location where there is more space available than within the body lumen, or that is more readily accessible than the body lumen. It is contemplated that a portion of the electrical circuitry portion of the lumen-traveling system (which may include hardware, firmware, software, or any combination thereof) may be located in a remote portion.

Methods of distributing functionalities of a system between hardware, firmware, and software located at two or more sites are well known to those of skill in the art. An electrical circuitry portion of the lumen-traveling system may include, but is not limited to, electrical circuitry associated with the sensor, response initiation circuitry, and electronics associated with the active portion. While the response initiation circuitry has been discussed within the context of electrical circuitry, it will be appreciated that in some embodiments other types of logic/circuitry may be used in place of or in addition to electrical circuitry, and the response initiation circuitry and other circuitry described herein is not limited to electrical circuitry. For example, fluid circuitry, chemo-mechanical circuitry, and other types of logic/circuitry may provide equivalent functionality and may be used in certain embodiments.

In some embodiments, the lumen-traveling device may include an external steering system capable of transmitting a wireless control signal to the structural element. In some embodiments, the lumen-traveling device may include a steering control portion in or on the structural element. Either the steering control portion in or on the structural element or an external steering system may be operated in a number of ways.

A lumen-traveling device may include an imaging marker or tag, and the remote portion may include an external imaging system or be capable of receiving information from an external imaging system. The position of the lumen-traveling device may be correlated with a pre-existing map of the body of the subject, or used to construct a map of the body of the subject. Movement of the lumen-traveling device may be controlled based at least in part upon the location of the lumen-traveling device within the body of the subject. In some embodiments, the lumen-traveling device may include a data storage location in which a map of the body of the subject may be stored. A pre-existing map may be stored in the data storage location before the lumen-traveling device is introduced into the body lumen of the subject. Alternatively, a map may be generated, either with the use of logic on the device or in a remote system, on the basis of information gathered as the device travels through the body of the subject, and the map thus generated may be stored in a memory location on the lumen-traveling device or elsewhere. In some embodiments, rather than storing a map, other positional or locational information may be stored that may be used to control the route taken through the body by the lumen-traveling device. In some embodiments, it may be desired that the device covers some statistical distribution of lumen sizes or locations during its travels, but it may not be necessary that it travel a specific route through the body, and size and location information for already-visited sites may be stored and used in selection of the route to be taken by the device.

FIG. **54** illustrates an embodiment of a lumen-traveling device **3900** that includes a propelling mechanism **3902** capable of producing directional movement of the lumen-traveling device **3900** through a body lumen; a steering mechanism **3904** capable of modifying a direction of movement of the lumen-traveling device; at least one electromagnetic transducer **3906** configured for at least one of producing an output signal representative of a bioelectromagnetic signal sensed from a target tissue or delivering an electromagnetic stimulus to the target tissue; and at least one of a signal processing portion **3908** capable of processing the output signal from the electromagnetic transducer or a stimulus source **3910** capable of producing an electromagnetic stimulus for delivery to the target tissue with the at least one electromagnetic transducer. As used herein, the term "bioelectromagnetic signal" refers to a signal that is an electrical, magnetic, and/or electromagnetic signal (or combination thereof) that is biological in original, for example as may be detected from neural tissue, cardiac tissue, and various other body tissues, as is known by those of skill in the art. Bioelectromagnetic signals are considered to include electrical and ionic currents, potentials, and/or charges, magnetic fields, fluxes, static and quasi-static electromagnetic fields, for example. A biological signal source may generate both electric and magnetic fields, either or both of which may be detected, and which may in some cases may be related. See J. Malmivuo and R. Plonsey, *Bioelectromagnetism: Principles and Applications of Bioelectric and Biomagnetic Fields*, Oxford University Press, NY, 1995 (Web Version), http://butler.cc.tut.fi/~malmivuo/bem/bembook/, which is incorporated by reference in its entirety; in particular, chapters 11 and 12 discuss the theory underlying bioelectric and biomagnetic measurements, respectively, chapters 13 and 14 discuss electric and magnetic measurements of electric activity of neural tissue, and chapters 15-20 discuss electric and magnetic measurements of the electric activity of the heart.

The lumen-traveling device may include at least one wall-engaging structure capable of engaging a wall of the body lumen to secure the lumen-traveling stimulation device with respect to the wall of the body lumen in the vicinity of a target tissue. A wall-engaging structure may be, for example, an expanding or extending structure, or a structure that engages the lumen wall through other mechanisms, such as suction mechanisms, adhesives, claws or hooks, as described elsewhere herein.

The lumen-traveling device may include a structural element configured to at least intermittently permit the movement of fluid through the body lumen past the lumen-traveling device. In some cases the structural element may permit continuous or near continuous flow of fluid past the lumen-traveling devices, while in others the device may

permit fluid movement at some times and obstruct fluid movement at other times, in a controlled and/or predictable manner. The structural element may be a described herein in connection with FIGS. **2A-2D**, **3A-3C**, and elsewhere herein.

In some embodiments, as illustrated in FIG. **55**, the lumen-traveling device **3950** may be configured for recording, and this in addition to a propelling mechanism **3952** capable of producing directional movement of the lumen-traveling device **3950** through a body lumen; a steering mechanism **3954** capable of modifying a direction of movement of the lumen-traveling device, which may include at least one electromagnetic transducer **3956** configured for producing an output signal representative of a bioelectromagnetic signal sensed from a target tissue, and at least one signal processing portion **3958** capable of processing the bioelectromagnetic signal recorded from the target tissue with the at least one electromagnetic transducer. Lumen-traveling device **3950** may also include a data storage location **3960**, or other structure for storing the sensed signal. Alternatively, lumen-traveling device **3950** may include a transmitter for transmitting the sensed signal to a remote location.

In other embodiments, as illustrated in FIG. **56**, the lumen-traveling device **4000** may be configured for stimulation, including a propelling mechanism **4002**, steering mechanism **4004**, at least one electromagnetic transducer **4006** configured for delivering an electromagnetic stimulus to the target tissue, and at least one stimulus source **4008** capable of producing an electromagnetic stimulus for delivery to the target tissue with the at least one electromagnetic transducer.

FIG. **57** depicts a version of a lumen-traveling device **4100** that is configured to perform both stimulation and recording. FIG. **57** also depicts and describes additional components that may be included in various embodiments of lumen-traveling biological interface devices that perform only stimulation or only recording, for example as depicted in simplified schematic form in FIGS. **54**, **55**, and **56**. Lumen-traveling device **4100** may include at least one electromagnetic transducer **4102** configured for producing an output signal representative of a bioelectromagnetic signal sensed from a target tissue (in this example two electromagnetic transducers **4102** are depicted, but one or larger numbers of electromagnetic transducers may be used for sensing), at least one electromagnetic transducer **4104** configured for delivering an electromagnetic stimulus to the target tissue (again, in this example two electromagnetic transducers for delivering stimuli are depicted, but one or a larger number of electromagnetic transducers for stimulation may be used), at least one signal processing portion **4106** capable of processing the output signal from the electromagnetic transducer **4102**, and at least one stimulus source **4108** capable of producing an electromagnetic stimulus for delivery to the target tissue with the at least one electromagnetic transducer **4104**. In some embodiments, the lumen-traveling device **4100** may include at least one electromagnetic transducer that is configured for both producing an output signal representative of a bioelectromagnetic signal sensed from a target tissue and delivering an electromagnetic stimulus to the target tissue; i.e. a single electromagnetic transducer may perform both recording or stimulating functions. In other embodiments, separate structures are used for recording and stimulating. Separate structures may be of the same or different types. Although FIG. **57** illustrates two transducers for recording and two transducers for stimulating, it is contemplated that a single lumen-traveling device may include larger numbers of electromagnetic transducers, which may be used for one or both of recording or stimulation. Naturally, the electronic circuitry associated with the transducers may be modified appropriately; for example, various multiplexing schemes, as known to those of skill in the art, may be used for handling input to and output from multiple transducers. As described previously, lumen-traveling device **4100** may include a propelling mechanism **4110** and steering mechanism **4112**. A lumen-traveling device **4100** may also include a receiver **4114** configured to receive a signal from a remote portion **4116**. Lumen-traveling device **4100** may include a transmitter **4118** configured to transmit a signal to a remote device. The remote device may be a controller (e.g. remote portion **4116** shown in FIG. **57**) or any device that detects, records, and/or re-transmits data from lumen-traveling device **4100**. Remote portion **4116** may include remote circuitry **4122**, transmitter **4124**, and receiver **4126**, and may include other components, for example as depicted in connection with FIG. **34**. Control circuitry **4120** on lumen-traveling device **4100** may also include additional components, as described generally elsewhere herein, e.g. in connection with FIG. **34**.

The lumen-traveling device may include a sensor **4128** capable of sensing a parameter indicative of proximity to the target tissue and generating a sense signal, which may be, for example, an optical sensor, an imaging device, a thermal sensor, a chemical sensor, an electrical or a magnetic sensor or other sensors as described elsewhere herein. The sensor may be used for sensing an anatomical feature, which may be, for example, a branching point. In addition, the lumen-traveling device may include a power source **4130** such as a battery or microbattery, a fuel cell, a bio fuel cell, an inductively driven power receiving structure driven by a remotely applied electromagnetic field, or an energy scavenging device capable of transducing blood flow, heart motion, gastrointestinal tract motion, pulmonary motion, or muscle motion, for example. A lumen-traveling device may be sized to fit within various body lumens, in order to travel to a location in proximity to a stimulation target or source of a biological signal of interest. For example, a lumen-traveling device may be sized to fit within a blood vessel in the brain in order to gain access to stimulation targets or signal source in regions of the brain, or sized to fit within a chamber of the heart for delivering a cardiac pacing stimulus or recording electromagnetic activity from the heart.

In some embodiments the lumen-traveling device may include at least one stimulus source capable of generating a stimulus adapted for controlling or modifying heart activity. In other embodiments the lumen-traveling device may include at least one stimulus source capable of generating a neural stimulus.

Electromagnetic transducers may include electrodes for delivering electrical stimuli and/or sensing electrical or electrochemical signals, coils for generating or sensing magnetic fields, other magnetic field sensing devices such as Hall effect sensors, antennae for delivering or sensing electromagnetic fields, and other types of electromagnetic devices for delivering or sensing electromagnetic fields or energy, including but not limited to ion-sensitive capacitive or electroactive devices, laser diodes, lasers, light emitting diodes, photodiodes, or photodetectors. Some types of electromagnetic transducers may be used for both delivery of electromagnetic stimuli and sensing of bioelectromagnetic signals, while other types of electromagnetic transducers may be suitable for stimulation or sensing, but not both. Various types of electrodes for delivering electrical stimuli and coils for delivering magnetic stimuli and associated

signal generation and processing circuitry are known in the art. See for example, BUCHER, VOLKER; GRAF, MICHAEL; STELZLE, MARTIN; NISCH, WILFRIED; "Low-Impedance Thin-Film Polycrystalline Silicon Microelectrodes for Extracellular Stimulation and Recording"; Biosensors and Bioelectronics; bearing a date of 1999; pp. 639-649; Vol. 14; Elsevier Science S.A.; located at: www.elsevier.com/locate/bios; CUI, XINYAN; HETKE, JAMILLE F.; WILER, JAMES A.; ANDERSON, DAVID J.; MARTIN, DAVID C.; "Electrochemical Deposition and Characterization of Conducting Polymer Polypyrrole/PPS on Multichannel Neural Probes"; Sensors and Actuators A Physical; bearing a date of 2001; pp. 8-18; Vol. 93; Elsevier Science B.V.; located at: www.elsevier.com/locate/sna; FIAC-CABRINO, G. C.; TANG, X.-M.; SKINNER, N.; DE ROOIJ, N. F.; KOUDELKA-HEP, M.; "Electrochemical Characterization of Thin-Film Carbon Interdigitated Electrode Arrays"; Analytica Chimica Acta; bearing a date of 1996; pp. 155-160; Vol. 326; Elsevier Science B.V.; GITTER, ALFRED H.; FROMM, MICHAEL; SCHULZKE, JÖRG-DIETER; "Impedance Analysis for the Determination of Epithelial and Subepithelial Resistance in Intestinal Tissues"; Journal of Biochemical and Biophysical Methods, bearing a date of 1998; pp. 35-46; Vol. 37; Elsevier Science B.V.; JANDERS, M.; EGERT, U.; STELZE, M.; NISCH, W.; "Novel Thin Film Titanium Nitride Micro-Electrodes with Excellent Charge Transfer Capability for Cell Stimulation and Sensing Applications"; IEEE Engineering in Medicine and Biology Society; bearing a date of 1996; pp. 245-247; IEEE; LOEB, G. E.; PECK, R. A.; MARTYNIUK, J.; "Toward the Ultimate Metal Microelectrode"; Journal of Neuroscience Methods; bearing a date of 1995; pp. 175-183; Vol. 63; Elsevier Science B.V.; RIEDMÜLLER, J.; BOLZ, A.; REBLING, H.; SCHALDACH, M.; "Improvement of Stimulation and Sensing Performance of Bipolar Pacemaker Leads"; IEEE Eng. Med. Biol. Soc.; 1992; pp. 2364-2365; IEEE; ROUSCHE, PATRICK J.; PELLINEN, DAVID S.; PIVIN, DAVID P.; WILLIAMS, JUSTIN C.; VETTER, RIO J.; KIPKE, DARYL R.; "Flexible Polyimide-Based Intracortical Electrode Arrays with Bioactive Capability"; IEEE Transactions on Biomedical Engineering; bearing a date March 2001; pp. 361-371; Vol. 48, No. 3; IEEE; RUTTEN, WIM; MOUVEROUX, JEAN-MARIE; BUITENWEG, JAN; HEIDA, CISKA; RUARDIJ, TEUN; MARANI, ENRICO; LAKKE, EGBERT; "Neuroelectronic Interfacing with Cultured Multielectrode Arrays Toward a Cultured Probe"; Proceedings of the IEEE; bearing a date of July 2001; pp. 1013-1029; Vol. 89, No. 7; IEEE; ROBINSON, DAVID A.; "The Electrical Properties of Metal Microelectrodes"; Proceedings of the IEEE; bearing a date of June 1968; pp. 1065-1071; Vol. 56, No. 6, all of which are incorporated herein by reference, for examples of electrodes for use in the central nervous system, peripheral nervous system, gut, or cardiac pacing.

Electrical circuitry and software/firmware for use in the acquisition and processing of bioelectromagnetic signals are described in various references, including the following examples which are incorporated herein by reference: DILLIER, NORBERT; LAI, WAI KONG; ALMQVIST, BENGT; FROHNE, CAROLIN; MÜLLER-DEILE, JOACHIM; STECKER, MATTHIAS; VON WALLENBERG, ERNST; "Measurement of the Electrically Evoked Compound Action Potential Via a Neural Response Telemetry System"; Annals Of Otology Rhinology and Laryngology; bearing a date of May 2002; pp. 407-414; Vol. 111, No. 5; Annals Publishing Company; DONOGHUE, JOHN P.; "Review: Connecting Cortex to Machines: Recent Advances in Brain Interfaces"; Nature Neuroscience Supplement; bearing a date on November 2002; pp. 1085-1088; Vol. 5; Nature Publishing Group; located at: http://www.nature-.com/natureneuroscience; GOZANI, SHAI N.; MILLER, JOHN P.; "Optimal Discrimination and Classification of Neuronal Action Potential Waveforms from Multiunit, Multichannel Recordings Using Software-Based Linear Filters"; IEEE Transactions on Biomedical Engineering; bearing a date of April 1994; pp. 358-372; Vol. 41, No. 4; IEEE; GRAY, CHARLES M.; MALDONADO, PEDRO E.; WILSON, MATHEW; MCNAUGHTON, BRUCE; "Tetrodes Markedly Improve the Reliability and Yield of Multiple Single-Unit Isolation from Multi-Unit Recordings in Cat Striate Cortex"; Journal of Neuroscience Methods; bearing a date of 1995; pp. 43-54; Vol. 63; Elsevier Science B.V.; HOFMANN, U. G.; FOLKERS, A.; MÖSCH, F.; HÖHL, D.; KINDLUNDH, M.; NORLIN, P.; "A 64(128)-Channel Multisite Neuronal Recording System"; bearing a date of 2002; pp. 1-4; JI, JIN; NAJAFI, KHALIL, WISE, KENSALL D.; "A Low-Noise Demultiplexing System for Active Multichannel Microelectrode Arrays"; IEEE Transactions of Biomedical Engineering; bearing a date of January 1991; pp. 77-81; Vol. 38, No. 1; IEEE; OLSSON III, R. H.; GULARI, M. N.; WISE, K. D.; "Poster 114: Silicon Neural Recording Arrays with On-Chip Electronics for In-Vivo Data Acquisition"; Microtechnologies in Medicine and Biology; bearing dates of May 2, 2002-May 4, 2002; pp. 237-240; IEEE; and SCHOONHOVEN, R.; STEGEMAN, D. F.; "Models and Analysis of Compound Nerve Action Potentials"; Critical Reviews in Biomedical Engineering; bearing a date of 1991; pp. 47-111; Vol. 19, No. 1; CRC Press, Inc. An example of electronic circuitry for control of stimulation with an implanted electrode system is provided, for example, in LOEB, GERALD E.; PECK, RAYMOND A.; MOORE, WILLIAM H.; HOOD, KEVIN; "BION System for Distributed Neural Prosthetic Interfaces"; Medical Engineering and Physics; bearing a date of 2001; pp. 9-18; Vol. 23; Elsevier Science Ltd.; located at: www.elsevier.com/locate/medengphy which is incorporated herein by reference.

Various references discuss the theoretical basis for electromagnetic sensing and stimulation. Examples (all of which are included herein by reference) include: HODGKIN, A. L.; HUXLEY, A. F.; "A Quantitative Description of Membrane Current and its Application to Conduction and Excitation in Nerve"; Journal of Physiology; bearing a date of 1952; pp. 500-544; Vol. 117; MARKS, WILLIAM B.; LOEB, GERALD E.; "Action Currents, Internodal Potentials, and Extracellular Records of Myelinated Mammalian Nerve Fibers Derived from Node Potentials"; Biophysical Journal; 1976; pp. 655-668; Vol. 16; MCNEAL, DONALD R.; "Analysis of a Model for Excitation of Myelinated Nerve"; IEEE Transactions on Biomedical Engineering; bearing a date of July 1976; pp. 329-337; Vol. BME-23, No. 4; RATTAY, FRANK; "Analysis of Models for Extracellular Fiber Stimulation"; IEEE Transactions on Biomedical Engineering; bearing a date of July 1989; pp. 676-682; Vol. 36, No. 7; IEEE; RATTAY, FRANK, ABERHAM, MATTHIAS; "Modeling Axon Membranes from Functional Electrical Stimulation"; IEEE Transactions on Biomedical Engineering; bearing a date of December 1993; pp. 1201-1209; Vol. 40, No. 12; IEEE; and STRUIJK, JOHANNES JAN; "The Extracellular Potential of a Myelinated Nerve Fiber in an Unbounded Medium and in Nerve Cuff Models"; Biophysical Journal; bearing a date of June 1997; pp. 2457-2469; Vol. 72; Biophysical Society. Related methods and devices, as well as underlying theory, are also described in various texts, for

example, K. W. Horch and G. S. Dhillon, Editors, *Neuroprosthetics: Theory and Practice* (Series on Bioengineering and Biomedical Engineering—Vol. 2), World Scientific Publishing Co. Pte. Ltd, Singapore, 2004, and J. Malmivuo and R. Plonsey, *Bioelectromagnetism: Principles and Applications of Bioelectric and Biomagnetic Fields*, Oxford University Press, NY, 1995, http://butler.cc.tut.fi/~malmivuo/bem/bembook/, which is incorporated herein by reference. As used herein, the term "coil" refers to various structures used to generate magnetic fields for use in magnetic stimulation. In some embodiments, a coil may include multiple current-carrying loops and in other embodiments a coil may include a single full or partial loop; while coils may often include generally rounded or circular loops (full or partial) coils are not limited to any particular configuration of loops. Optical stimulation may be performed by methods as described in U.S. Pat. No. 6,921,413, which is incorporated herein by reference.

In various embodiments, the stimulus source may be capable of generating a depolarizing stimulus sufficient to produce depolarization of at least a portion of the target tissue, or a hyperpolarizing stimulus sufficient to produce hyperpolarization of at least a portion of the target tissue. In some embodiments, the stimulus source may be capable of generating a stimulus sufficient to produce functional inhibition of activity of the target tissue, while in other embodiments the stimulus source may be capable of generating a stimulus sufficient to produce functional promotion of activity of the target tissue. Stimuli sufficient to produce functional inhibition or promotion of activity in a target tissue or portion thereof may be determined experimentally or selected based upon information and knowledge available to a person of skill in the art. In some embodiments, the stimulus source may be capable of generating a pre-programmed stimulation pattern. In some embodiments, the stimulus source may be capable of generating a stimulus in response to the sense signal from a sensor, which may be an electrical sensor, a magnetic sensor, or a chemical sensor.

The at least one stimulus source may be capable of generating a stimulus in response to the signal from the remote portion.

The lumen-traveling device of may include at least one signal processing portion capable of processing the output signal from the electromagnetic transducer, for example by amplifying the output signal recorded from the target tissue with the at least one electromagnetic transducer. The signal processing portion may process the output signal by various signal processing methods, including, for example, filtering or performing feature detection/pattern recognition on the output signal.

As illustrated in FIG. **57**, in some embodiments, the lumen-traveling device may include at least one signal processing portion capable of processing the output signal from the electromagnetic transducer; and at least one transmitter configured to transmit an output of the at least one signal processing portion to a remote location. Alternatively, or in addition, a transmitter may be configure to transmit information relating to the status, location, or position of the lumen-traveling device or relating to an action taken by the lumen-traveling device (e.g., delivery of an electromagnetic stimulus to a target tissue) to a remote location.

Or, referring back to FIG. **55**, the lumen-traveling device may include at least one signal processing portion capable of processing the output signal from the electromagnetic transducer; and at least one data storage location configured for storing an output of the at least one signal processing portion of the lumen-traveling device.

FIG. **58** shows a method of emplacing an electromagnetic stimulation device. The method includes the steps of causing a self-propelling electromagnetic stimulation device to travel within a body tube tree of a subject toward a target site (step **4152**); if a branch point including two or more branches within the body tube tree is reached by the self-propelling electromagnetic stimulation device, causing the self-propelling electromagnetic stimulation device to enter a selected branch (step **4154**); and causing the self-propelling electromagnetic stimulation device to stop traveling upon reaching the target site (step **4156**).

As used herein, the term "self-propelling" refers to a device having an on-board propelling mechanism for generating a propulsion force. The power source for the propelling mechanism may be located on-board the device, or, in some embodiments, power may be beamed or transmitted to the device from an external source. Control circuitry for controlling operation of the propelling mechanism may be on-board the device, or, in some embodiments, located at least in part in a remote portion. For example, causing a self-propelling electromagnetic stimulation device to travel within a body tube tree is considered to include causing the generation of control or driving signal with electronic circuitry on-board or at least in part off-board the device, but is not considered to include the application of an external force to cause movement of the electromagnetic stimulation device.

FIG. **59** illustrates possible expansions of the method shown in FIG. **58**, in which the method may include a step of introducing the self-propelling electromagnetic stimulation device into the body tube tree at **4202**; causing a self-propelling electromagnetic stimulation device to travel within a body tube tree of a subject toward a target site (step **4204**); if a branch point including two or more branches within the body tube tree is reached by the self-propelling electromagnetic stimulation device, causing the self-propelling electromagnetic stimulation device to enter a selected branch (step **4206**); and causing the self-propelling electromagnetic stimulation device to stop traveling upon reaching the target site (step **4208**). The method may also include causing the self-propelling electromagnetic stimulation device to engage the wall of the body tube tree at the target site, as shown at step **4210**. The body tube tree into which the self-propelling electromagnetic stimulation device is introduced may be the cardiovascular system of the subject, as indicated at **4212**, the respiratory system of the subject, as indicated at **4214**, or CSF-space of the subject, as indicated at **4216**. The branch which the self-propelling electromagnetic stimulation device enters at step **4206** may be selected because it is expected to lead toward the target site, as indicated at **4220**; or the branch may be selected on some other basis (e.g., size, orientation, direction of fluid flow through the branch, etc.).

FIG. **60** shows a method of emplacing a self-propelling electromagnetic stimulation device generally as shown in FIG. **58**, which includes causing a self-propelling electromagnetic stimulation device to travel within a body tube tree of a subject toward a target site (step **4252**); if a branch point including two or more branches within the body tube tree is reached by the self-propelling electromagnetic stimulation device, causing the self-propelling electromagnetic stimulation device to enter a selected branch (step **4254**); and causing the self-propelling electromagnetic stimulation device to stop traveling upon reaching the target site (step **4256**). As indicated in dashed box **4260**, the method may include causing the self-propelling electromagnetic stimulation device to travel within the body tube tree toward a

target site located within a chamber of the heart of the subject. Alternatively, as shown in dashed box **4262**, the method may include causing the self-propelling electromagnetic stimulation device to travel within the body tube tree toward a target site located within the vasculature of the brain of the subject. Here and elsewhere, dashed boxes are used to indicate optional and/or alternative steps in a flow diagram. The target site may be located within the vasculature of the brain in the vicinity of a stimulation target including tissue responsive to electromagnetic stimulation—examples of which include the hypothalamus (as indicated at **4264**), cingulate cortex (as indicated at **4266**), fornix (as indicated at **4268**), anterior thalamus (as indicated at **4270**), subthalamic nucleus (as indicated at **4272**), globus pallidus interna (as indicated at **4274**), insula (as indicated at **4276**), or deep brain (as indicated at **4278**).

A large number of brain areas may be suitable sites for stimulation, including but not limited to the myelencephalon or hindbrain, including the medulla oblongata (medullary pyramids, or nuclei including arcuate nucleaus of medulla, solitary nucleus, hypoglossal nucleus, nucleus ambiguus, olivary body, inferior olivary nucleus, cuneate nucleus, accessory cuneate neucleus, gracile nucleus, inferior salivatory nucleus, raphe nuclei [obscurus, magnus, and pallidus], area postrema, posterior nucleus of vagus nerve); the metencephalon, including the pons (pontine tegmentum, superior salivary nucleus, trapezoid body, pontine nuclei [superior olivary nucleus, trigeminal nerve nuclei, abducens nucleus, facial motor nucleus, cochlear nuclei vestibular nuclei], locus ceruleus, paramedian pontine reticular formation, nucleus centralis superior) and the cerebellum (cerebellar vermis, cerebellar hemispheres [anterior lobe, posterior lobe, flocculonodular lobe], cerebellar nuclei, fastigial nucleus, globose nucleus, emboliform nucleus, dentate nucleus); the mesencephalon or midbrain, including the tectum (inferior colliculi and superior colliculi), the cerebral peduncle, the midbrain tegmentum (ventral tegmental area, Red Nucleus, substantia nigra, and crus cerebri), and the pretectum; the diencephalon, including epithalamus (pineal body, habenular nuclei stria medullares, and tenia thalami), the thalamus including the anterior nuclear group (anteroventral nucleus, anterodorsal nucleus, anteromedial nucleus), medial nuclear group (dorsomedial nucleus, midline nuclear group, paratenial nucleus, paraventricular nucleus, reniens nucleus, rhomboidal nucleus), intralaminar nuclear group (centromedial nucleus, parafascicular nucleus, paracentral nucleus, central lateral nucleus, central medial nucleus), lateral nuclear group (lateral dorsal nucleus, lateral posterior nucleus, pulvinar), ventral nuclear group (ventral anterior nucleus, ventral lateral nucleus, ventral posterior nucleus), metathalamus (medial geniculate body, lateral geniculate body) and thalamic reticular nucleus, the hypothalamus (optic chiasm, arcuate nucleus, subformical organ, preoptic area, suprachiasmatic nucleus, supraoptic nucleus, periventricular nucleus, paraventricular nucleus, ventromedial nucleus, dorsomedial nucleus, lateral hypothalamus, infundibulum, tuber cinereum, tuberal region, mammillary bodies, mammillary nucleus), the subthalamus (thalamic nucleus, zona incerta), and the pituitary gland (neurohypophysis, intermediate pituitary, adenohypophysis); the Telencephalon or cerebrum including the cerebral hemispheres, which include the white matter (corona radiata, internal capsule, external capsule, extreme capsule, arcuate fasciculus, uncinate fasciculus), subcortical structures (amygdala, including central nucleus, medial nucleus, cortical and basomedial nuclei, and lateral and basolateral nuclei hippocampus, including dentate gyrus and cornu ammonis; and basal ganglia including striatum, nucleus lentiformis, globus pallidus, medial pallidum (GPi), lateral pallidum (GPe), putamen, nucleus caudatus, claustrum, corpus amygdaloideum), Rhinencephalon (olfactory bulb, piriform cortex, anterior olfactory nucleus, olfactory tract, anterior commissure), cerebral cortex (frontal lobe including primary motor cortex and Brodmann area 4, prefrontal cortex, supplementary motor cortex, premotor cortex) and Brodmann areas 6, 8, 9, 10, 11, 24, 25, 32, 33, 44, 45, 46, 47), temporal lobe including primary auditory cortex-A1, A2, inferior temporal cortex, posterior inferior temporal cortex, and Brodmann areas 9, 20, 21, 22, 27, 34, 35, 36, 37, 38, 41, 42), parietal lobe including primary somatosensory cortex-S1, S2, posterior parietal cortex, precuneus, Brodmann areas 1, 2, 3, 5, 7, 23, 26, 29, 31, 39, 40, occipital lobe including primary visual cortex (V1), V2, cuneus and Brodmann areas 17, 18, and 19, insula, cingulate cortex (anterior cingulate, posterior cingulate, Brodmann areas 23, 24, 26, 29, 30, 31 and 32); and the limbic system, including the amygdala, cingulate gyrus, fornicate gyrus, hippocampus, hypothalamus, mammillary body, nucleus accumbens, orbitofrontal cortex, and parahippocampal gyrus. In addition to brain structures, other portions of the nervous system, both central (e.g. spinal canal, retina, brain, etc.) and peripheral may be responsive to electrical, magnetic and/or other forms of stimulation. In addition, central and peripheral portion of the nervous system may also be sources of bioelectric activity that may be detected with a lumen-traveling biological interface device. Other tissues (including smooth, skeletal, and cardiac muscles) may also be sources of bioelectric/biomagnetic signals and may also be responsive to electrical, magnetic, chemical or other stimuli.

FIG. **61**, shows a method of emplacing a self-propelling electromagnetic stimulation device that is an expansion of the method shown in FIG. **58**, and includes selecting a target site in proximity to a stimulation target, the stimulation target including tissue responsive to electromagnetic stimulation (at **4302**); causing a self-propelling electromagnetic stimulation device to travel within a body tube tree of a subject toward a target site (step **4304**); if a branch point including two or more branches within the body tube tree is reached by the self-propelling electromagnetic stimulation device, causing the self-propelling electromagnetic stimulation device to enter a selected branch (step **4306**); and causing the self-propelling electromagnetic stimulation device to stop traveling upon reaching the target site (step **4308**). For example the stimulation target may be the cingulate cortex, as indicated at **4312**, the hypothalamus, as indicated at **4314**, the fornix, as indicated at **4316**, the anterior thalamus, as indicated at **4318**, the subthalamic nucleus as indicated at **4320**, the globus pallidus interna, as indicated at **4322**, the insula, as indicated at **4324**, or the deep brain, as indicated at **4326**.

Activity in certain brain regions is associated with certain moods, feelings, sensations, or behaviors, and stimulation in these brain areas (which may be excitatory/promoting or inhibitory) may be used to up- or down-regulate these moods or behaviors. For example, stimulation of the hypothalamus is thought to produce a sensation of satiety, which may reduce overeating leading to obesity (see for example U.S. Pat. No. 5,782,798; also see U.S. Pat. No. 6,950,707 relating to stimulation to treat obesity, which are incorporated herein by reference; stimulation of the cingulate cortex or vagus nerve may reduce depression; injury to the insula may diminish addictive behaviors such as smoking, suggesting that stimulation in this area could influence addictive behaviors (see N. H. Naqvi et al., "Damage to the Insula

Disrupts Addiction to Cigarette Smoking," Science Vol. 315, pp. 531-534, 2007, doi:10.1126/science.1135926, incorporated herein by reference); stimulation of the fornix and anterior thalamus (thalamic nucleus) may be used in the treatment of epilepsy (see U.S. Pat. Nos. 7,003,352; 6,597,954; 6,134,474; and 6,337,997 regarding stimulation of various brain areas to treat epilepsy, all of which are incorporated herein by reference), stimulation of the subthalamic nucleus may reduce Parkinson's, and stimulation of the globus pallidus interna may suppress tremor. Stimulation of various areas may reduce schizophrenia or bipolar disorder. A number of patents, all of which are incorporated herein by reference, describe methods of electrically, magnetically and/or chemically stimulating various tissues to treat various problems, including stimulating various brain areas to treat neurological disorders (U.S. Pat. Nos. 6,128,538 and 6,016,449) or sleep disorders (U.S. Pat. No. 5,335,657); stimulating vagus nerve to treat dementia (U.S. Pat. No. 5,269,303); stimulating deep brain or other areas to treat pain and/or headaches (U.S. Pat. Nos. 7,013,177; 6,735,475; and 6,402,678); stimulating deep brain to treat Parkinsons disease (U.S. Pat. No. 6,920,359); stimulating deep brain or motor cortex to suppress essential tremor (U.S. Pat. No. 6,959,215); and stimulating stomach and/or small intestine to treat gastrointestinal disorders (U.S. Pat. No. 6,591,137).

Many stimulation/recording targets may be accessed via one or more body lumens. For example, the hippocampus may be accessed via the temporal horn of the lateral ventricles. Deep brain structures (e.g. the hypothalamus) may be accessed via the third ventricle, or via various blood vessels. Basal ganglia may be accessed via the lenticulostriate artery or thalamostriate vessels. Regions of the heart may be accessed through the chambers of the heart. Selection of suitable body lumens for use as target sites for providing access to a stimulation/recording target may be based upon anatomical considerations. One consideration may be proximity of the body lumen (or a region thereof) to the stimulation/recording target. Proximity may be determined simply on the basis of physical distance, or may take into account tissue properties that influence the transmission of stimuli/signals between the target site and the stimulation/recording target (e.g., electrical conductivity or capacitance, magnetic permittivity or permeability, etc.). Another consideration may be the ability to position the lumen-traveling device in the body lumen without producing unwanted effects; for example, it may be undesirable to block the supply of blood or other fluid to a tissue region or to prevent drainage of a fluid (blood, CSF, etc.) from a tissue region, so a body lumen that is small enough that the presence of a lumen-traveling device would significantly diminish fluid movement in the body lumen may be a less desirable target site, as might be a body lumen that is the single source/drainage for a tissue region. Conversely, a body lumen that is large relative to the lumen-traveling device, or that is one of multiple body lumens supplying or draining a tissue region may be a more desirable target site.

As shown in FIG. **62**, a method of emplacing an self-propelling electromagnetic stimulation device may include selecting a target site based upon anatomical information as indicated at step **4352** (e.g., position within a particular blood vessel or cerebral ventricle known to be close to a particular brain structure may be detected by imaging) or selecting a target site based upon measurement of a physiological parameter, as indicated at step **4354**. The physiological parameter may include a signal characteristic of a selected region of the nervous system (as shown at **4368**) or a signal characteristic of a selected region of the heart (as shown at **4370**), or the physiological parameter may include a signal-to-noise ratio indicative of good signal transduction path between the self-propelling electromagnetic stimulation device and the stimulation target (as shown at **4372**).

As indicated at step **4356**, the method may include selecting a self-propelling electromagnetic stimulation device sized to fit within the target site, for example by selecting the self-propelling electromagnetic stimulation device from an assortment of self-propelling electromagnetic stimulation devices of different sizes as indicated at step **4374**. Alternatively, in some cases, as indicated step **4358**, the size of the self-propelling electromagnetic stimulation device may be adjusted to fit within the target site. Further steps of causing a self-propelling electromagnetic stimulation device to travel within the body tube tree of a subject toward a target site, at step **4360**; if a branch point including two or more branches within the body tube tree is reached by the self-propelling electromagnetic stimulation device, causing the stimulation device to enter a selected branch (step **4362**); and causing the self-propelling electromagnetic stimulation device to stop traveling upon reaching the target site (step **4364**) are as described elsewhere herein.

FIG. **63** depicts a further variant of the basic method depicted in FIG. **58**, showing several additional possible steps. For example, the method may include the step of introducing the self-propelling electromagnetic stimulation device into the body tube tree by injection, as shown at **4502**, or, alternatively, releasing the self-propelling electromagnetic stimulation device from a catheter introduced into the body tube tree of the subject, as shown at **4504**.

As shown at step **4506**, the method may include causing the self-propelling electromagnetic stimulation device to travel within the body tube tree of a subject toward a target site, which may be performed under the control of a remote portion, as shown at **4508**, or alternatively, under the control of a control system located at least in part on the self-propelling electromagnetic stimulation device, as shown at **4510**. As shown at **4512**, if a branch point including two or more branches within the body tube tree is reached by the self-propelling electromagnetic stimulation device, the method may include causing the self-propelling electromagnetic stimulation device to enter a selected branch. For example, the method may include detecting the branch point with a sensor on the self-propelling electromagnetic stimulation device, as indicated at **4514**. As shown in previous figures, the method may include causing the self-propelling electromagnetic stimulation device to stop traveling upon reaching the target site, as shown at **4516**. The method may include engaging a wall of the body tube tree by several possible alternative methods: the method may include engaging a wall of the body tube tree by causing at least a portion of the self-propelling electromagnetic stimulation device to expand to form a pressure fit with the wall of the body tube tree (step **4518**), by releasing an adhesive material from the self-propelling electromagnetic stimulation device (step **4520**), or extending at least one claw or barb-like structure from the self-propelling electromagnetic stimulation device to penetratingly engage the wall of the body tube tree (step **4522**).

FIG. **64** illustrates the introduction of a self-propelling electromagnetic stimulation device **4550** into the body **4552** of a subject by injection. In the example depicted in FIG. **64**, the self-propelling electromagnetic stimulation device **4550** is a cardiac stimulation device (e.g. a portion of a pacemaker). Self-propelling electromagnetic stimulation device **4550** is injected into arm vein **4554** (e.g. the cephalic vein) with hypodermic needle **4556**, and travels in the direction of

the blood flow to right atrium **4558** of heart **4560**, along the route indicated by the dashed arrow. From right atrium **4558**, the self-propelling electromagnetic stimulation device travels may travel to the base of right ventricle **4562**, where it may reside and deliver cardiac pacing stimuli.

FIG. **65** illustrates the introduction of a lumen-traveling biological interface device **4600** (e.g. a neural stimulation and/or sensing device) into the brain **4602** of a subject **4604** with a catheter **4606**. Catheter **4606**, carrying lumen-traveling biological interface device (the position of the lumen-traveling biological interface device on the catheter is indicated by an open circle **4608**), is introduced into a vein (e.g. femoral **4610** as depicted in FIG. **65**, or alternatively an arm vein as shown in FIG. **64**). Catheter **4606** is advanced into the right atrium **4612** of the heart **4614**, through heart **4614**, and out via aorta **4616**, and into carotid artery **4618**. Lumen-traveling biological interface device **4600** may then be released from catheter **4606** and may travel through the brain vasculature (e.g. on the route indicated by the dashed line) until it reaches a target site within the brain. Catheter and device configuration may be modified in some embodiments to carry more than one device on the catheter in order to accomplish delivery of two or more devices at one time with a catheter.

FIG. **66** illustrates the introduction of lumen-traveling stimulation devices to muscle. In FIG. **66**, lumen-traveling devices **5150**, **5152**, **5154**, and **5156** are injected into vein **5158** of arm **5160** of a subject with syringe **5162**, for example, where, as indicated by the dashed arrows, they may travel toward the muscle **5164** drained by the vein **5158**, against the flow of blood, into capillaries **5170**, **5172**, **5174**, and **5176** in muscle **5164**, where they will reside in order to perform electromagnetic stimulation of the muscle **5164**, e.g. for performing functional electromagnetic stimulation. In FIG. **66**, lumen-traveling devices are not drawn to scale, but are indicated by black circles for purposed of illustration. Stimulation parameters suitable for use in stimulation of muscle with multiple, distributed, implanted microelectrodes are described in LOEB, GERALD E.; PECK, RAYMOND A.; MOORE, WILLIAM H.; HOOD, KEVIN; "BION System for Distributed Neural Prosthetic Interfaces"; Medical Engineering and Physics; bearing a date of 2001; pp. 9-18; Vol. 23; Elsevier Science Ltd.; located at: www.elsevier.com/locate/medengphy, which is incorporated herein by reference.

FIGS. **67**A and **67**B show further variations of the method shown in FIG. **58**. The method may include selecting a target site in proximity to a stimulation target, the stimulation target including tissue responsive to electromagnetic stimulation, in step **4702**. In some embodiments, the method may also include adjusting the size of the self-propelling electromagnetic stimulation device to fit within the target site, as shown at step **4704**. As shown in FIG. **58**, the method may include causing a self-propelling electromagnetic stimulation device to travel within a body tube tree of a subject toward a target site at **4706**, and, at step **4708**, if a branch point including two or more branches within the body tube tree is reached by the self-propelling electromagnetic stimulation device, causing the self-propelling electromagnetic stimulation device to enter a selected branch. At step **4710**, the method includes the step of causing the self-propelling electromagnetic stimulation device to stop traveling upon reaching the target site. At step **4712**, the method includes delivering an electromagnetic stimulus to the stimulation target with the self-propelling electromagnetic stimulation device. Various types of stimuli may be applied as shown in **4712** in FIG. **67**A and in **4714**, **4716**, **4418**, **4720**, **4722**, **4724**, **4726**, and **4728** in FIG. **67**B (which is a continuation of FIG. **67**A at connection points A and B). For example, the electromagnetic stimulus may include one or more of a depolarizing electromagnetic stimulus, as shown at **4714**, a hyperpolarizing electromagnetic stimulus as shown at **4716**, or a pulsatile electromagnetic stimulus, as shown at **4718**. In some embodiments, the electromagnetic stimulus may be a functionally inhibiting stimulus (i.e., a stimulus sufficient to produce functional inhibition of activity of the target tissue or a portion thereof) as indicated at **4727** or a functionally promoting stimulus (i.e., a stimulus sufficient to produce functional promotion of activity of target tissue or a portion thereof), as indicated at **4729** in FIG. **67**B. Various types of electrical and magnetic stimuli are well known to those of skill in the art, as exemplified by P. H. Peckham and J. S. Knutson, "Functional Electrical Stimulation for Neuromuscular Applications," Annu. Rev. Biomed. Eng., Vol. 7, 2005, pp. 327-60, Published online Mar. 23, 2005; doi:10.1146/annurev.bioeng.6.040803.140103, copyright 2005; KOBETIC, RUDI; TRIOLO, RONALD J.; UHLIR, JAMES P.; BIERI, CAROLE; WIBOWO, MICHAEL; POLANDO, GORDIE; MARSOLAIS, E. BYRON; DAVIS JR., JOHN A.; FERGUSON, KATHLEEN A.; SHARMA, MUKUT; "Implanted Functional Electrical Stimulation System for Mobility in Paraplegia: A Follow-Up Case Report"; IEEE Transactions on Rehabilitation Engineering; bearing a date of December 1999; pp. 390-398; Vol. 7, No. 4; IEEE; INMANN, ANDREAS; HAUGLAND, MORTEN; HAASE, JENS; BIERING-SØRENSEN, FIN; SINKJAER, THOMAS; "NeuroReport: Signals from Skin Mechanoreceptors used in Control of a Hand Grasp Neuroprosthesis"; Motor Systems; bearing a date of Sep. 17, 2001; pp. 2817-2819; Vol. 12, No. 13; Lippincott Williams & Wilkins; C. R. Butson and C. C. McIntyre, "Role of electrode design on the volume of tissue activated during deep brain stimulation," J. Neural Eng., Vol. 3, 2006, pp. 1-8, Published Online 19 Dec. 2005, doi:10.1088/1741-2560/3/1/001; and FANG, ZI-PING; MORTIMER, J. THOMAS; "Selective Activation of Small Motor Axons by Quasitrapezoidal Current Pulses"; IEEE Transactions on Biomedical Engineering; bearing a date of February 1991; pp. 168-174; Vol. 38, No. 2; IEEE; which are incorporated herein by reference.

In some embodiments, as shown at step **4720**, the method may include detecting a bioelectric signal from the stimulation target or at least one region associated therewith and delivering an electromagnetic stimulus responsive to detecting the bioelectric signal from the stimulation target or the at least one region associated therewith. Alternatively, in some embodiments, as shown at step **4722**, the method may include detecting a biomagnetic signal from the stimulation target or at least one region associated therewith and delivering an electromagnetic stimulus responsive to detecting the biomagnetic signal from the stimulation target or the at least one region associated therewith. In some embodiments, as shown at step **4724**, the method may include detecting a biochemical signal from the stimulation target or at least one region associated therewith and delivering an electromagnetic stimulus responsive to detecting the biochemical signal from the stimulation target or the at least one region associated therewith. Biochemical signals may be detected using various sensors as described herein, including biosensors of various types, immunosensors, pH sensors, etc. In still other embodiments, as shown at step **4721**, the method may include detecting a biophysical signal from the stimulation target or at least one region associated therewith and delivering an electromagnetic stimulus responsive to detecting the biophysical signal from the stimulation target or the at

least one region associated therewith. A biophysical signal may include, for example, a pressure or flow condition, e.g. a pressure or flow signal associated with blood in the heart or other portion of the circulatory system. Delivery of an electromagnetic stimulus to the stimulation target may be performed with a single electromagnetic transducer, as indicated in **4723**, or with multiple electromagnetic transducers **4725**.

In various embodiments, stimuli delivered in response to a detected signal may be used to amplify naturally occurring activity, or to produce an effect that is complementary to naturally occurring activity. Alternatively, stimuli delivered in response to a detected signal may be used to diminish or damp naturally occurring activity, or produce an effect that counters naturally occurring activity. In some embodiments, sensed activity may be used to indicate proximity to a stimulation target. In some embodiments, stimulation may be correlated temporally, but not spatially, with the detected signal. The method may also include delivering an electromagnetic stimulus to the stimulation target in response to a remote control signal, as indicated at **4726**, or in response to a pre-programmed stimulation pattern, as indicated at **4728**.

Methods of detecting and analyzing bioelectric and/or biomagnetic signals are well known to those of skill in the art, as exemplified by K. W. Horch and G. S. Dhillon, Editors, *Neuroprosthetics: Theory and Practice* (Series on Bioengineering and Biomedical Engineering—Vol. 2), World Scientific Publishing Co. Pte. Ltd, Singapore, 2004, in particular, chapters 2.2, 2.4, 4.3 and 5.2, and J. Malmivuo and R. Plonsey, *Bioelectromagnetism: Principles and Applications of Bioelectric and Biomagnetic Fields*, Oxford University Press, NY, 1995, http://butler.cc.tut.fi/~malmivuo/bem/bembook/, which are incorporated herein by reference.

FIG. **68** depicts an example of detection of a bioelectric signal and delivery of a stimulation in response to the detected signal is illustrated in FIG. **68**. A heart **4750** of a subject is depicted in FIG. **68**. A lumen-traveling device **4752** located in right atrium **4754** may sense naturally occurring bioelectrical activity generated by the sinoatrial **4756** node of heart **4750**, for example, indicating the need to initiate a heartbeat. In the case of a conduction block between sinoatrial node **4756** and atrioventricular node **4758**, the signal will not be transmitted normally and contraction of the ventricles **4760** and **4762** will not be initiated properly. In order to compensate for this defect, lumen-traveling device **4752** may transmit a signal to second lumen-traveling stimulation device **4764** located in right ventricle **4760**, which may then deliver an electrical pacing signal to cause contraction of ventricles **4760** and **4762**.

FIG. **69** is a flow diagram of a further variation of the method shown in FIG. **58**. The method of FIG. **69** includes causing a self-propelling electromagnetic stimulation device to travel within a body tube tree of a subject toward a target site at step **4772**, if a branch point including two or more branches within the body tube tree is reached by the self-propelling electromagnetic stimulation device, causing the self-propelling electromagnetic stimulation device to enter a selected branch at step **4774**, and causing the self-propelling electromagnetic stimulation device to stop traveling upon reaching the target site at **4776** as shown in previously described embodiments. Additional steps may include storing a record of the operation of the self-propelling electromagnetic stimulation device as indicated at **4778** and/or transmitting a representation of an activity of the self-propelling electromagnetic stimulation device to a remote portion as indicated at **4780**. The method may also include causing the self-propelling electromagnetic stimulation device to resume traveling, as indicated at **4782**. Although the steps of storing a record of the operation of the self-propelling electromagnetic stimulation device and transmitting a representation of an activity of the self-propelling electromagnetic stimulation device are presented in a particular order in the flow diagram of FIG. **69**, in practice these steps may be performed at various times during the operation of the device, and in some cases may be performed prior to the device stopping traveling or after the device resumes traveling (or independent of starting or stopping of the device, in that the device may not necessarily stop or start, but may instead move continuously).

FIG. **70** is a flow diagram of a method of emplacing an self-propelling electromagnetic stimulation device as shown in FIG. **58**, including the steps of causing a self-propelling electromagnetic stimulation device to travel within a body tube tree of a subject toward a target site (step **4802**); if a branch point including two or more branches within the body tube tree is reached by the self-propelling electromagnetic stimulation device, causing the self-propelling electromagnetic stimulation device to enter a selected branch (step **4804**); and causing the self-propelling electromagnetic stimulation device to stop traveling upon reaching the target site (step **4806**). At **4808**, the method further includes emplacing at least one additional self-propelling electromagnetic stimulation device by causing the at least one additional self-propelling electromagnetic stimulation device to travel within the body tube tree of the subject toward an additional target site; wherein if a branch point including two or more branches within the body tube tree is reached by the at least one additional self-propelling electromagnetic stimulation device, causing the at least one self-propelling electromagnetic stimulation device to enter a selected branch; and causing the at least one self-propelling electromagnetic stimulation device to stop traveling upon reaching the additional target site.

FIG. **71** is a flow diagram of a further extension of the method of FIG. **58**, which includes the steps of causing a self-propelling electromagnetic stimulation device to travel within a body tube tree of a subject toward a target site at **4822**, and if a branch point including two or more branches within the body tube tree is reached by the self-propelling electromagnetic stimulation device, causing the self-propelling electromagnetic stimulation device to enter a selected branch at step **4824**. In some embodiments may include the variants specified in steps **4826** and **4828**. As indicated in **4826**, the method may include pulling one or more electromagnetic stimulation devices toward the target site with the self-propelling electromagnetic stimulation device. Alternatively, or in addition, the method may include pushing one or more electromagnetic stimulation devices toward the target site with the self-propelling electromagnetic stimulation device, as indicated at **4828**. And, as shown in previous figures, the method may include causing the self-propelling electromagnetic stimulation device to stop traveling upon reaching the target site, as indicated at **4830**.

The use of multiple stimulation devices is depicted in FIG. **72**. FIG. **72** illustrates brain **4850** of a subject, including lateral ventricals **4852** and **4854**, third ventricle **4856**, and thalamus **4858** (indicated generally as the striped region in FIG. **72**). Stimulation devices **4860**, **4862**, **4864**, and **4866** are positioned in lateral ventricle **4852**, stimulation devices **4868** and **4870** are positioned in third ventricle **4856**. The stimulation devices are thus distributed around thalamus **4858** and may be used to selectively stimulate thalamus **4858** (or portions thereof). For example, relatively low stimuli delivered through multiple stimulation devices may

overlap to activate restricted regions of the thalamus. In another example, by activating multiple stimulation devices in appropriately selected patterns, spatially and/or temporally complex stimulation patterns may be produced. Stimulation devices **4860**, **4862**, **4864**, and **4866** are linked by tethers **4872**, **4874**, and **4876**, which may be formed of suture material, wire, cable, or fiber, for example. By forming a linked group of stimulation devices, the relative spacing between the stimulation devices may be controlled, and positioning of the stimulation devices relative to anatomical structures may be facilitated. A linked group of stimulation devices may be used in the practice of the method steps **4826** and **4828** of FIG. **71**; a relatively flexible tether may be used if electromagnetic stimulation devices are to be pulled by a self-propelling electromagnetic stimulation device, while a more rigid linkage may be used if electromagnetic stimulation devices are to be pushed by a self-propelling electromagnetic stimulation device

In some embodiments, a method may include using a lumen-traveling device to carry a bioelectromagnetic interface device to a target site. This approach is illustrated in FIG. **73**A-**73**C. In FIG. **73**A, bioelectromagnetic interface device **4950** is carried through body tube tree **4952** by self-propelling lumen-traveling device **4954**, which may be of the type depicted generally in FIGS. **24** and **25**A-**25**B. For example, self-propelling lumen-traveling device **4954** may include grasper **4956** for carrying bioelectromagnetic interface device **4950**. Self-propelling lumen-traveling device **4954** may include sensor **4958**, which is configured to detect the arrival of the bioelectromagnetic interface device at the target site **4960**, near stimulation target **4962**. Sensor **4958** may be any of various types of sensors, as described herein. In FIG. **73**A, the self-propelling lumen-traveling device **4954**, carrying bioelectromagnetic interface device **4950**, travels through body tube tree **4952** in the direction indicated by the arrow. In FIG. **73**B, the arrival of bioelectromagnetic interface device **4950** at target site **4960** is detected by sensor **4958**. Bioelectromagnetic interface device **4950** may then be released from self-propelling lumen-traveling device **4954**, and self-propelling lumen-traveling device may move away from target site **4960**, leaving the bioelectromagnetic interface device at target site **4960**.

FIG. **74** is a flow diagram of a method of configuring a bioelectromagnetic interface system, including moving a at least one bioelectromagnetic interface device through a body tube tree of a subject toward a target site with a self-propelling lumen-traveling device (at step **4902**); detecting the arrival of the at least one bioelectromagnetic interface device at the target site (at step **4904**); and moving the self-propelling lumen-traveling device away from the target site while leaving the at least one bioelectromagnetic interface device at the target site (at step **4906**).

FIG. **75** is a flow diagram of an expansion of the method of FIG. **74**, showing additional details of the method. In some embodiments, the method may include a preliminary step **5002** of attaching the at least one bioelectromagnetic interface device to the self-propelling lumen-traveling device. The method may include moving at least one bioelectromagnetic interface device through a body tube tree of a subject toward a target site with a self-propelling lumen-traveling device (at step **5004**). In some embodiments, the method may include moving the at least one bioelectromagnetic interface device through a body tube tree of a subject toward a target site with a self-propelling lumen-traveling device by pulling the at least one bioelectromagnetic interface device with the self-propelling lumen-traveling device as shown at **5006**, while in other embodiments the method may include moving the at least one bioelectromagnetic interface device through a body tube tree of a subject toward a target site with a self-propelling lumen-traveling device by pushing the at least one bioelectromagnetic interface device with the self-propelling lumen-traveling device, as shown at **5008**. The method may include detecting the arrival of the at least one bioelectromagnetic interface device at the target site (at step **5010**) and releasing the at least one bioelectromagnetic interface device from the self-propelling lumen-traveling device (at step **5012**). In some cases the method may include causing the at least one bioelectromagnetic interface device to engage the wall of the body tube tree at the target site (as shown at **5014**), and moving the self-propelling lumen-traveling device away from the target site while leaving the at least one bioelectromagnetic interface device at the target site (at step **5016**).

FIG. **76** is a flow diagram showing further details of the method of FIG. **74**. The method includes moving at least one bioelectromagnetic interface device through a body tube tree of a subject toward a target site with a self-propelling lumen-traveling device (at step **5052**); detecting the arrival of the at least one bioelectromagnetic interface device at the target site (at step **5054**); and moving the self-propelling lumen-traveling device away from the target site while leaving the at least one bioelectromagnetic interface device at the target site (at step **5056**). The body tube tree may be the cardiovascular system, as indicated at **5060**, the CSF-space, as indicated at **5062**, the respiratory system of the subject, as indicated at **5064**, the gastrointestinal tract of the subject, as indicated at **5066**, of the urogenital tract of the subject, as indicated at **5068**, or various other body lumens that may provide access to a stimulation target.

FIG. **77** is a flow diagram of a method of emplacing a bioelectromagnetic interface system including: introducing a plurality of bioelectromagnetic interface devices into a body tube tree of a subject via at least one introduction site at step **5102**, at least a portion of the bioelectromagnetic interface devices including at least one electromagnetic transducer configured for at least one of producing an output signal representative of a bioelectromagnetic signal sensed from a target tissue or delivering an electromagnetic stimulus to the target tissue and at least one of a signal processing portion capable of processing the output signal from the electromagnetic transducer or a stimulus source capable of producing an electromagnetic stimulus for delivery to the target tissue with the at least one electromagnetic transducer; and causing the plurality of bioelectromagnetic interface devices to travel within the body tube tree to a plurality of target sites within the body tube tree, at least a portion of the plurality of target sites located in the vicinity of at least one target tissue (step **5104**).

The method may including introducing the plurality of bioelectromagnetic interface devices into the body tube tree via the at least one introduction site substantially simultaneously, as indicated at **5108**. Alternatively, the method may include introducing the plurality of bioelectromagnetic interface devices into the body tube tree via the at least one introduction site in batches, as indicated at **5110**. A batch is a group of devices that are introduced substantially simultaneously at a single location. In another alternative, the method may include introducing the plurality of bioelectromagnetic interface devices into the body tube tree via the at least one introduction site sequentially, as indicated at **5112**. In another alternative, the method may include introducing the plurality of bioelectromagnetic interface devices into the body tube tree of the subject via the at least one introduction site as a linked group of bioelectromagnetic interface

devices. For example, the bioelectromagnetic interface devices may be linked to each other end-to-end in a chain with connectors or graspers of the type depicted in FIGS. **25**A and **25**B, or each interface device may be attached, either permanently or temporarily, to one or more other interface devices in a chain or other configuration by suture material, wire, cable, fiber, etc., for example as depicted in FIG. **72**.

The introduction of a single bioelectromagnetic interface device is depicted in FIG. **64**. The introduction of a batch of multiple bioelectromagnetic interface devices into the body tube tree at a single introduction site is illustrated in FIG. **66**. FIGS. **78**A-**78**B depict the introduction of a batch of multiple bioelectromagnetic interface devices into a body tube tree, showing greater detail. In FIG. **78**A, a batch of multiple bioelectromagnetic interface devices including bioelectromagnetic interface devices **5150***a*, **5150***b*, **5150***c* and **5150***d* is contained in syringe **5152** prior to delivery into body tube tree **5154**. Body tube tree **5154** includes first region **5156** and branches **5158**, **5160**, **5162**, and **5164**. As shown in FIG. **78**B, bioelectromagnetic interface devices **5150***a*, **5150***b*, **5150***c* and **5150***d* are introduced into first region **5156** of body tube tree **5154** as a group, substantially simultaneously. As shown in FIG. **78**C, bioelectromagnetic interface devices **5150***a*, **5150***b*, **5150***c* and **5150***d* travel along the routes indicated by the dashed arrows to reach branches **5164**, **5160**, **5158**, and **5162**, respectively. The same procedure can be carried out at multiple locations in the body, either simultaneously (by using multiple syringes or equivalents) or in sequence, to deliver multiple batches of bioelectromagnetic interface devices to the body.

FIG. **79** illustrates a plurality of bioelectromagnetic interface devices **5200***a*, **5200***b*, **5200***c*, **5200***d*, **5200***e*, **5200***f*, **5200***g*, **5200***h*, located at a plurality of target sites **5202***a*, **5202***b*, **5202***c*, **5202***d*, **5202***e*, **5202***f*, **5202***g*, **5202***h*, within vasculature **5204** of brain **5206**. The target sites **5202***a*, **5202***b*, **5202***c*, **5202***d*, **5202***e*, **5202***f*, **5202***g*, **5202***h* (indicated by dashed circles) are distributed through out brain region **5208**. Multiple bioelectromagnetic interface devices may be used to record activity from multiple locations, to record multiple signals from a single general area, to stimulate multiple areas, to generate complex electromagnetic fields for stimulation, or to perform both recording and stimulation, simultaneously or in a desired temporal sequence. Stimulation of a plurality of areas may include stimulation of spatially proximate areas, e.g., adjacent brain regions, or spatially separated regions of a body.

FIG. **80** is a flow diagram of a method of emplacing a bioelectromagnetic interface system as shown in FIG. **77**, which includes: introducing a plurality of bioelectromagnetic interface devices into a body tube tree of a subject via at least one introduction site, at least a portion of the bioelectromagnetic interface devices including at least one electromagnetic transducer configured for at least one of producing an output signal representative of a bioelectromagnetic signal sensed from a target tissue or delivering an electromagnetic stimulus to the target tissue and at least one of a signal processing portion capable of processing the output signal from the electromagnetic transducer or a stimulus source capable of producing an electromagnetic stimulus for delivery to the target tissue with the at least one electromagnetic transducer (step **5252**); and causing the plurality of bioelectromagnetic interface devices to travel within the body tube tree to a plurality of target sites within the body tube tree, at least a portion of the plurality of target sites located in the vicinity of at least one target tissue (step **5254**). The plurality of target sites may spatially distributed around the target tissue, as indicated at **5258** in FIG. **80**, and illustrated in FIG. **72**, or spatially distributed throughout the target tissue as indicated at **5260** in FIG. **80**, and as illustrated in FIG. **79**.

As further shown in FIG. **80**, the method may include causing at least a portion of the plurality of bioelectromagnetic interface devices to travel within the body tube tree under their own power, wherein the at least a portion of the plurality of bioelectromagnetic interface devices includes self-propelling devices, as shown at **5262**. In some embodiments, the method may include causing at least a portion of the plurality of bioelectromagnetic interface devices to travel within the body tube tree by moving the at least a portion of the plurality of bioelectromagnetic interface devices through the body tube tree attached to at least one catheter, as indicated at **5264**. An example of emplacement of a bioelectromagnetic interface device with a catheter is depicted in FIG. **65**. Introduction of a device with a catheter is illustrated in FIG. **65**. In some embodiments, following placement of a bioelectromagnetic interface device in the body tube tree with a catheter, the bioelectromagnetic interface device may travel from the initial placement site to a final destination under its own power.

FIG. **81** is a flow diagram of a method of emplacing a bioelectromagnetic interface system as shown in FIG. **77**, which includes: introducing a plurality of bioelectromagnetic interface devices into a body tube tree of a subject via at least one introduction site, at least a portion of the bioelectromagnetic interface devices including at least one electromagnetic transducer configured for at least one of producing an output signal representative of a bioelectromagnetic signal sensed from a target tissue or delivering an electromagnetic stimulus to the target tissue and at least one of a signal processing portion capable of processing the output signal from the electromagnetic transducer or a stimulus source capable of producing an electromagnetic stimulus for delivery to the target tissue with the at least one electromagnetic transducer (step **5302**); and causing the plurality of bioelectromagnetic interface devices to travel within the body tube tree to a plurality of target sites within the body tube tree, at least a portion of the plurality of target sites located in the vicinity of at least one target tissue (step **5304**). As indicated at **5308**, in some embodiments the target tissue may include at least a portion of the heart of the subject. In some embodiments, as indicated at **5310**, the target tissue may include at least a portion of the nervous system of the subject, including but not limited to, the cingulate cortex as indicated in **5312**, the fornix as indicated in **5314**, the anterior thalamus as indicated in **5316**, the subthalamic nucleus as indicated in **5318**, the or the globus pallidus interna as indicated in **5320**. In other embodiments, the target tissue may include at least a portion of a urogenital tract, as indicated at **5322**, at least a portion of a muscle, as indicated at **5324**, or at least a portion of a gastrointestinal tract, as indicated at **5326**.

FIG. **82** is a flow diagram of an expansion the method of emplacing a bioelectromagnetic interface system shown in FIG. **77**, which includes: introducing a plurality of bioelectromagnetic interface devices into a body tube tree of a subject via at least one introduction site, at least a portion of the bioelectromagnetic interface devices including at least one electromagnetic transducer configured for at least one of producing an output signal representative of a bioelectromagnetic signal sensed from a target tissue or delivering an electromagnetic stimulus to the target tissue and at least one of a signal processing portion capable of processing the output signal from the electromagnetic transducer or a

stimulus source capable of producing an electromagnetic stimulus for delivery to the target tissue with the at least one electromagnetic transducer (step **5352**); causing the plurality of bioelectromagnetic interface devices to travel within the body tube tree to a plurality of target sites within the body tube tree, at least a portion of the plurality of target sites located in the vicinity of at least one target tissue (step **5354**), causing each of at least a portion of the plurality of bioelectromagnetic interface devices to stop adjacent a respective target site (step **5356**), and, optionally, causing each of at least a portion of the plurality of bioelectromagnetic interface devices to engage the wall of the body tube tree adjacent to a respective target site (step **5358**). In some embodiments, as indicated at **5362**, the body tube tree may be the cardiovascular system of the subject. In other embodiments, as indicated at **5364**, the body tube tree may be the respiratory system of the subject. In still other embodiments, the body tube tree may be the CSF-space of the subject, as indicated at **5366**, the urogenital tract of the subject, as indicated at **5368**, or the gastrointestinal tract of the subject, as indicated at **5370**.

FIG. **83** is a flow diagram showing further variations of the method of emplacing a bioelectromagnetic interface system shown generally in FIG. **77**. The method includes: introducing a plurality of bioelectromagnetic interface devices into a body tube tree of a subject via at least one introduction site, at least a portion of the bioelectromagnetic interface devices including at least one electromagnetic transducer configured for at least one of producing an output signal representative of a bioelectromagnetic signal sensed from a target tissue or delivering an electromagnetic stimulus to the target tissue and at least one of a signal processing portion capable of processing the bioelectromagnetic signal recorded from the target tissue with the at least one electromagnetic transducer or a stimulus source capable of producing an electromagnetic stimulus for delivery to the target tissue with the at least one electromagnetic transducer (step **5402**); causing the plurality of bioelectromagnetic interface devices to travel within the body tube tree to a plurality of target sites within the body tube tree, at least a portion of the plurality of target sites located in the vicinity of at least one target tissue (step **5404**). In some embodiments, as shown at **5408**, the method may include selecting at least a portion of the plurality of target sites based upon anatomical information. In some embodiments, as shown at **5410**, the method may include selecting at least a portion of the plurality of target sites based upon measurement of one or more physiological parameters, which might be, for example, a signal characteristic of a selected region of the nervous system, as shown at **5412**, or a selected region of the heart, as shown at **5414**. In some embodiments, as shown at **5416**, the one or more physiological parameters may include a signal-to-noise ratio indicative of good signal transduction path between at least a portion of the one or more bioelectromagnetic interface devices and the stimulation target.

FIG. **84** is a flow diagram including further variations of the method of emplacing a bioelectromagnetic interface system shown generally in FIG. **77**. The method includes: introducing a plurality of bioelectromagnetic interface devices into a body tube tree of a subject via at least one introduction site, at least a portion of the bioelectromagnetic interface devices including at least one configured for at least one of producing an output signal representative of a bioelectromagnetic signal sensed from a target tissue or delivering an electromagnetic stimulus to the target tissue and at least one of a signal processing portion capable of processing the bioelectromagnetic signal recorded from the target tissue with the at least one electromagnetic transducer or a stimulus source capable of producing an electromagnetic stimulus for delivery to the target tissue with the at least one electromagnetic transducer (step **5452**); causing the plurality of bioelectromagnetic interface devices to travel within the body tube tree to a plurality of target sites within the body tube tree, at least a portion of the plurality of target sites located in the vicinity of at least one target tissue (step **5454**). In addition, the method may include delivering an electromagnetic stimulus to the stimulation target with at least a portion of the one or more bioelectromagnetic interface devices, at **5456**.

As shown at **5458** of FIG. **84**, the method may include detecting a bioelectric signal from the stimulation target or at least one region associated therewith and delivering the electromagnetic stimulus to the stimulation target with at least a portion of the one or more bioelectromagnetic interface devices in response to detecting the bioelectric signal from the stimulation target or the at least one region associated therewith. Alternatively, or in addition, the method may include detecting a biomagnetic signal from the stimulation target or at least one region associated therewith and delivering the electromagnetic stimulus to the stimulation target with at least a portion of the one or more bioelectromagnetic interface devices in response to detecting the biomagnetic signal from the stimulation target or the at least one region associated therewith, as shown at **5460**. In another alternative, the method may include detecting a biochemical signal from the stimulation target or at least one region associated therewith and delivering the electromagnetic stimulus to the stimulation target with at least a portion of the one or more bioelectromagnetic interface devices in response to detecting the biochemical signal from the stimulation target or the at least one region associated therewith, as shown at **5462**. Biochemical signals may include signals from various types of biosensors, indicating concentration of neurotransmitters, direct or indirect indicators of metabolic activity, pH, cell-signaling materials, and other biochemical signals indicating a condition of the stimulation target and/or indication for delivery of stimulation to the stimulation target.

In another alternative, the method may include detecting a biophysical signal from the stimulation target or at least one region associated therewith and delivering the electromagnetic stimulus to the stimulation target with at least a portion of the one or more bioelectromagnetic interface devices in response to detecting the biophysical signal from the stimulation target or the at least one region associated therewith, as shown at **5464**.

In some embodiments, one or more remote portions may be used, and the method may include detecting a remote control signal and delivering the electromagnetic stimulus to the stimulation target with at least a portion of the bioelectromagnetic interface devices in response to detecting the remote control signal, as a shown at **5466**. In other embodiments, the method may include delivering the electromagnetic stimulus to the stimulation target with at least a portion of the bioelectromagnetic interface devices based upon a pre-programmed stimulation pattern, as shown at **5468**.

FIG. **85** is a flow diagram of a method of emplacing a neural stimulation device, which may include causing a self-propelling neural stimulation device to travel within a body tube tree of a subject toward a target site (at step **5502**); if a branch point including two or more branches within the body tube tree is reached by the self-propelling neural stimulation device, causing the self-propelling neural stimulation device to enter a branch leading toward the target site

(at step **5504**); and causing the self-propelling neural stimulation device to stop traveling upon reaching the target site (at **5506**). As noted elsewhere herein, various applications are known for neural stimulation devices and systems. The method may be used for emplacing a single neural stimulation device at a time, or for expanding to emplace multiple neural stimulation devices. In one variant, the method may include carrying at least one additional neural stimulation device with the self-propelling neural stimulation device. The neural stimulation devices may remain connected during use, or the method may include resealing the at least one additional neural stimulation device from the self-propelling neural stimulation device.

FIG. **86** is a flow diagram showing further details of a method as outlined in FIG. **85**. The method may include introducing the self-propelling neural stimulation device into the body tube tree of a subject (at step **5552**), causing a self-propelling neural stimulation device to travel within a body tube tree of a subject toward a target site (at step **5554**); if a branch point including two or more branches within the body tube tree is reached by the self-propelling neural stimulation device, causing the self-propelling neural stimulation device to enter a branch leading toward the target site (at step **5556**); causing the self-propelling neural stimulation device to stop traveling upon reaching the target site (at **5558**), and, optionally, causing the self-propelling neural stimulation device to engage the wall of the body tube tree at the target site (at step **5560**). The body tube tree may be the vascular system of the subject, as indicated at **5564**, the respiratory system of the subject, as indicated at **5566**, or the CSF-space of the subject, as indicated at **5568**, for example.

FIG. **87** is a flow diagram showing further details of a method as outlined in FIG. **86**. The method may include introducing the self-propelling neural stimulation device into the body tube tree of a subject (at step **5602**), causing a self-propelling neural stimulation device to travel within a body tube tree of a subject toward a target site (at step **5604**); if a branch point including two or more branches within the body tube tree is reached by the self-propelling neural stimulation device, causing the self-propelling neural stimulation device to enter a branch leading toward the target site (at step **5606**); causing the self-propelling neural stimulation device to stop traveling upon reaching the target site (at **5608**), and, optionally, causing the self-propelling neural stimulation device to engage the wall of the body tube tree at the target site (at step **5610**). The method may include causing the self-propelling neural stimulation device to travel within the body tube tree toward a target site located within a chamber of the heart of the subject, as indicated at **5614**. In another embodiment, the method may include causing the self-propelling neural stimulation device to travel within the body tube tree toward a target site located within the brain of the subject, as indicated at **5616**. In another embodiment, the method may include causing the self-propelling neural stimulation device to travel within the body tube tree toward a target site located within the spinal canal of the subject, as indicated at **5618**. In another embodiment, the method may include causing the self-propelling neural stimulation device to travel within the body tube tree toward a target site located within the gastrointestinal tract of the subject, as indicated at **5620**. In still another embodiment, the method may include causing the self-propelling neural stimulation device to travel within the body tube tree toward a target site located within the urogenital system of the subject, as indicated at **5622**. And in yet another embodiment, the method may include causing the self-propelling neural stimulation device to travel within the body tube tree toward a target site located within the musculature of the subject, as indicated at **5624**.

FIG. **88** is a flow diagram showing a further expansion of the method of FIG. **85**. The method includes selecting a target site in proximity to a stimulation target (at step **5652**) and performing one or more of adjusting the size of the self-propelling neural stimulation device to fit within the target site (at **5664**) or selecting a self-propelling neural stimulation device sized to fit within a target size (at **5666**), e.g. by selecting the self-propelling neural stimulation device from an assortment of self-propelling neural stimulation devices of different sizes (at **5668**). The method may also include the steps of causing a self-propelling neural stimulation device to travel within a body tube tree of a subject toward a target site (at **5670**), if a branch point including two or more branches within the body tube tree is reached by the self-propelling neural stimulation device, causing the self-propelling neural stimulation device to enter a branch leading toward the target site (at **5672**), and causing the self-propelling neural stimulation device to stop traveling upon reaching the target site (at **5674**). In some embodiments, the method may include causing the self-propelling neural stimulation device to resume traveling, as indicated at **5676**. The self-propelling neural stimulation device may be an electromagnetic stimulation device, as indicated at **5678**, a magnetic stimulation device, as indicated at **5680**, an optical stimulation device, as indicated at **5682**, or a chemical stimulation device, as indicated at **5684**.

FIG. **89** is a flow diagram showing a further expansion of the method of FIG. **85**, including the steps of causing a self-propelling neural stimulation device to travel within a body tube tree of a subject toward a target site at **5702**; if a branch point including two or more branches within the body tube tree is reached by the self-propelling neural stimulation device, causing the self-propelling neural stimulation device to enter a branch leading toward the target site at **5704**; and causing the self-propelling neural stimulation device to stop traveling upon reaching the target site at **5706**. The method may include detecting the branch point with a sensor on the self-propelling neural stimulation device, as indicated at **5710**. As indicated at **5712**, the method may include causing the self-propelling neural stimulation device to travel within the body tube tree under the control of a control system located at least in part on the self-propelling neural stimulation device. Alternatively, the method may include causing the self-propelling neural stimulation device to travel within the body tube tree under the control of a remote portion, as indicated at **5714**. The method may include causing the self-propelling neural stimulation device to stop traveling upon reaching the target site by discontinuing propulsion of the self-propelling neural stimulation device, as shown at **5716**, by causing the self-propelling neural stimulation device to stop traveling upon reaching the target site by applying a force to oppose propulsion of the self-propelling neural stimulation device, as shown at **5718**, or by engaging the wall of the body tube tree at the target site, as shown at **5720**. The self-propelling neural stimulation device may be caused to engage a wall of the body tube tree by causing at least a portion of the self-propelling neural stimulation device to expand to form a pressure fit with the wall of the body tube tree, as indicated at **5722**, by releasing an adhesive material from the self-propelling neural stimulation device, as indicated at **5724**, or extending at least one claw or barb-like structure from the self-propelling neural stimulation device to penetratingly engage the wall of the

body tube tree, as indicated at **5726**. Examples of such structures are illustrated in FIGS. **5**A, **5**B, and **8**B, for example.

FIG. **90** depicts steps of method of emplacing a bioelectromagnetic signal sensing device, which may include: causing a self-propelling bioelectromagnetic signal sensing device to travel within a body tube tree of a subject toward a target site (step **5752**); if a branch point including two or more branches within the body tube tree may be reached by the self-propelling bioelectromagnetic signal sensing device, causing the self-propelling bioelectromagnetic signal sensing device to enter a branch leading toward the target site (step **5754**); and causing the self-propelling bioelectromagnetic signal sensing device to stop traveling upon reaching the target site (step **5756**).

In some embodiments, sensing of bioelectromagnetic signals with bioelectromagnetic signal sensing devices as described herein may be used in research or diagnostic applications. In some embodiments, sensing of bioelectromagnetic signals may be used in combination with stimulation (electrical, magnetic, chemical, optical, etc.), delivery of drugs, or various treatments, stimuli, etc. to provide a therapeutic or beneficial effect, for providing control or feedback. Such applications are provided by way of example, and are not intended to be limiting.

FIG. **91** shows an expanded version of the method of FIG. **90**, which includes introducing the self-propelling bioelectromagnetic signal sensing device into the body tube tree of a subject at **5802**; causing the self-propelling bioelectromagnetic signal sensing device to travel within a body tube tree of a subject toward a target site at **5804**; if a branch point including two or more branches within the body tube tree is reached by the self-propelling bioelectromagnetic signal sensing device, causing the self-propelling bioelectromagnetic signal sensing device to enter a branch leading toward the target site at **5806** causing the self-propelling bioelectromagnetic signal sensing device to stop traveling upon reaching the target site at **5808**; and causing the self-propelling bioelectromagnetic signal sensing device to engage the wall of the body tube tree at the target site at **5810**. The body tube tree may be any of various body tube trees, including, but not limited to, a vascular system of the subject, as indicated at **5814**, a respiratory system of the subject, as indicated at **5816**, or a CSF-space of the subject, as indicated at **5818**. The bioelectromagnetic signal sensing device may be caused to travel within the body tube tree under the control of a control system located at least in part on the self-propelling bioelectromagnetic signal sensing device, as indicated at **5820**, or alternatively, the method may include causing the self-propelling bioelectromagnetic signal sensing device to travel within the body tube tree under the control of a remote portion, as indicated at **5822**.

FIG. **92** provides still further details of a method as shown in FIG. **90**. The method includes selecting a target site in proximity to a bioelectromagnetic signal source (step **5852**); causing a self-propelling bioelectromagnetic signal sensing device to travel within a body tube tree of a subject toward a target site (step **5854**); if a branch point including two or more branches within the body tube tree is reached by the self-propelling bioelectromagnetic signal sensing device, causing the self-propelling bioelectromagnetic signal sensing device to enter a branch leading toward the target site (step **5856**); and causing the self-propelling bioelectromagnetic signal sensing device to stop traveling upon reaching the target site (step **5858**). As in various previously described embodiments, the method may include a step of engaging a wall of the body tube tree by various methods including, but not limited to, causing at least a portion of the self-propelling bioelectromagnetic signal sensing device to expand to form a pressure fit with the wall of the body tube tree (as shown at **5860**), releasing an adhesive material from the self-propelling bioelectromagnetic signal sensing device (as shown at **5862**), or extending at least one claw or barb-like structure from the self-propelling bioelectromagnetic signal sensing device to penetratingly engage the wall of the body tube tree (as shown at **5864**). Step **5854** may include causing the self-propelling bioelectromagnetic signal sensing device to travel with the body tube tree toward a target site located within a chamber of a heart of the subject (as shown at **5868**), within the brain of the subject, of the subject (as shown at **5870**), within a spinal canal of the subject (as shown at **5872**), within a gastrointestinal tract of the subject (as shown at **5874**), within a urogenital system of the subject (as shown at **5876**), or within a musculature of the subject of the subject (as shown at **5878**). A target site may be selected that is in proximity to a bioelectromagnetic signal source, for example, a target site within a chamber of the heart may be selected if a signal is to be detected from the heart, a target site within a cerebral ventrical or a blood vessel in the brain may be selected for detecting a signal from a region of the brain, and so on. As shown at **5880**, the method may include detecting the branch point with a sensor on the self-propelling bioelectromagnetic signal sensing device. Various types of signals may provide information about the presence of a branch point, including, for example, optical signals, acoustic signals, and electromagnetic signals, among others.

FIG. **93** is a flow diagram showing a further variant of the method of FIG. **90**, which includes the steps of causing a self-propelling bioelectromagnetic signal sensing device to travel within a body tube tree of a subject toward a target site (step **5886**), causing a self-propelling bioelectromagnetic signal sensing device to travel within a body tube tree of a subject toward a target site (step **5888**), and sensing a bioelectromagnetic signal with the self-propelling bioelectromagnetic signal sensing device (step **5890**). In some embodiments, the method may include, sensing a plurality of bioelectromagnetic signals with the self-propelling bioelectromagnetic signal sensing device, wherein each of the plurality of bioelectromagnetic signals is sensed with a respective electromagnetic transducer of a plurality of electromagnetic transducers carried by the self-propelling bioelectromagnetic signal sensing device, as indicated at **5892**. The method may also include causing the self-propelling bioelectromagnetic signal sensing device to stop traveling upon reaching the target site (step **5894**) and causing the self-propelling bioelectromagnetic signal sensing device to resume traveling (step **5896**).

Another application for methods and devices as described herein is in cardiac stimulation. FIG. **94** shows steps of method for emplacing a cardiac stimulation device. The method may include causing a self-propelling cardiac stimulation device to travel within the body tube tree of a subject toward a target site at **5902**; if a branch point including two or more branches within the body tube tree is reached by the self-propelling cardiac stimulation device, causing the self-propelling cardiac stimulation device to enter a branch leading toward the target site at **5904**; and causing the self-propelling cardiac stimulation device to stop traveling upon reaching the target site at **5906**.

FIG. **95** shows an expansion of the method of FIG. **94**, which includes introducing the self-propelling cardiac stimulation device into the body tube tree of a subject (step **5952**); selecting a target site in proximity to a stimulation

target (step **5954**); causing a self-propelling cardiac stimulation device to travel within the body tube tree of a subject toward a target site at **5956**; if a branch point including two or more branches within the body tube tree is reached by the self-propelling cardiac stimulation device, causing the self-propelling cardiac stimulation device to enter a branch leading toward the target site at **5958**; and causing the causing the self-propelling cardiac stimulation device to stop traveling upon reaching the target site at **5960**. The self-propelling cardiac stimulation device may be introduced into a body tube tree of the subject at step **5952** by injection, or by being released from a catheter, for example. In some embodiments, the body tube tree may be the vascular system of the subject, as indicated in **5964**; as illustrated in FIG. **64**, a self-propelling cardiac stimulation device introduced into the vascular system (e.g. via a vein in the arm) can travel to the heart, where it may be used to deliver stimulation within a chamber of the heart. The self-propelling cardiac stimulation device may be an electromagnetic stimulation device, as indicated in **5966**, a magnetic stimulation device, as indicated in **5968**, an optical stimulation device, as indicated in **5970**, or a chemical stimulation device, as indicated in **5972**. The stimulation target referenced in step **5954** may be, for example, a particular region of the heart, and the target site may be a particular location within the heart, on the exterior of the heart, or in a blood vessel supplying the heart, for example. As described generally elsewhere herein, the method may include causing the self-propelling cardiac stimulation device to travel within the body tube tree under the control of a control system located at least in part on the self-propelling cardiac stimulation device, or causing the self-propelling cardiac stimulation device to travel within the body tube tree under the control of a remote portion. FIG. **95** also depicts two additional optional steps: in some embodiments, as indicated in **5974**, the method may include pushing one or more additional cardiac stimulation devices with the self-propelling cardiac stimulation device, while in other embodiments, as indicated in **5976**, the method may include pulling one or more additional cardiac stimulation devices with the self-propelling cardiac stimulation device.

A further variant of the method of emplacing a cardiac stimulation device outlined in FIG. **94** is shown in FIG. **96**. The method may include selecting a self-propelling cardiac stimulation device that is sized to fit within the target site, as indicated at **6002**. This may be accomplished, for example by selecting the self-propelling cardiac stimulation device from an assortment of self-propelling cardiac stimulation devices of different sizes, as indicated in **6004**. Alternatively, the method may include adjusting the size of the self-propelling cardiac stimulation device to fit within the target site, as indicated at **6006**. The method may include causing a self-propelling cardiac stimulation device to travel within the body tube tree of a subject toward a target site at **6008**; if a branch point including two or more branches within the body tube tree is reached by the self-propelling cardiac stimulation device, causing the self-propelling cardiac stimulation device to enter a branch leading toward the target site at **6010**; and causing the self-propelling cardiac stimulation device to stop traveling upon reaching the target site at **6012**. The method may further include causing the self-propelling cardiac stimulation device to engage the wall of the body tube tree at the target site, at **6014**. The method may include detecting the branch point with a sensor on the self-propelling cardiac stimulation device, as indicated at **6018**.

The method may include engaging a wall of the body tube tree by causing at least a portion of the self-propelling cardiac stimulation device to expand to form a pressure fit with the wall of the body tube tree, as indicated at **6020**, by releasing an adhesive material from the self-propelling cardiac stimulation device, as indicated at **6022**, or by extending at least one claw or barb-like structure from the self-propelling cardiac stimulation device to penetratingly engage the wall of the body tube tree, as indicated at **6024**.

Those having skill in the art will recognize that the state of the art has progressed to the point where there is little distinction left between hardware and software implementations of aspects of systems; the use of hardware or software is generally (but not always, in that in certain contexts the choice between hardware and software can become significant) a design choice representing cost vs. efficiency tradeoffs. Those having skill in the art will appreciate that there are various vehicles by which processes and/or systems and/or other technologies described herein can be effected (e.g., hardware, software, and/or firmware), and that the preferred vehicle will vary with the context in which the processes and/or systems and/or other technologies are deployed. For example, if an implementer determines that speed and accuracy are paramount, the implementer may opt for a mainly hardware and/or firmware vehicle; alternatively, if flexibility is paramount, the implementer may opt for a mainly software implementation; or, yet again alternatively, the implementer may opt for some combination of hardware, software, and/or firmware. Hence, there are several possible vehicles by which the processes and/or devices and/or other technologies described herein may be effected, none of which is inherently superior to the other in that any vehicle to be utilized is a choice dependent upon the context in which the vehicle will be deployed and the specific concerns (e.g., speed, flexibility, or predictability) of the implementer, any of which may vary. Those skilled in the art will recognize that optical aspects of implementations will typically employ optically-oriented hardware, software, and or firmware.

The foregoing detailed description has set forth various embodiments of the devices and/or processes via the use of block diagrams, flowcharts, and/or examples. Insofar as such block diagrams, flowcharts, and/or examples contain one or more functions and/or operations, it will be understood by those within the art that each function and/or operation within such block diagrams, flowcharts, or examples can be implemented, individually and/or collectively, by a wide range of hardware, software, firmware, or virtually any combination thereof. It will further be understand that method steps may be presented in a particular order in flowcharts, and/or examples herein, but are not necessarily limited to being performed in the presented order. For example, steps may be performed simultaneously, or in a different order than presented herein, and such variations will be apparent to one of skill in the art in light of this disclosure. In one embodiment, several portions of the subject matter described herein may be implemented via Application Specific Integrated Circuits (ASICs), Field Programmable Gate Arrays (FPGAs), digital signal processors (DSPs), or other integrated formats. However, those skilled in the art will recognize that some aspects of the embodiments disclosed herein, in whole or in part, can be equivalently implemented in integrated circuits, as one or more computer programs running on one or more computers (e.g., as one or more programs running on one or more computer systems), as one or more programs running on one or more processors (e.g., as one or more programs running on one or more microprocessors), as firmware, or as virtually any combination thereof, and that designing the circuitry and/or

writing the code for the software and or firmware would be well within the skill of one of skill in the art in light of this disclosure. In addition, those skilled in the art will appreciate that the mechanisms of the subject matter described herein are capable of being distributed as a program product in a variety of forms, and that an illustrative embodiment of the subject matter described herein applies regardless of the particular type of signal bearing medium used to actually carry out the distribution. Examples of a signal bearing medium include, but are not limited to, the following: a recordable type medium such as a floppy disk, a hard disk drive, a Compact Disc (CD), a Digital Video Disk (DVD), a digital tape, a computer memory, etc.; and a transmission type medium such as a digital and/or an analog communication medium (e.g., a fiber optic cable, a waveguide, a wired communications link, a wireless communication link, etc.).

In a general sense, those skilled in the art will recognize that the various embodiments described herein can be implemented, individually and/or collectively, by various types of electro-mechanical systems having a wide range of electrical components such as hardware, software, firmware, or virtually any combination thereof; and a wide range of components that may impart mechanical force or motion such as rigid bodies, spring or torsional bodies, hydraulics, and electro-magnetically actuated devices, or virtually any combination thereof. Consequently, as used herein "electro-mechanical system" includes, but is not limited to, electrical circuitry operably coupled with a transducer (e.g., an actuator, a motor, a piezoelectric crystal, etc.), electrical circuitry having at least one discrete electrical circuit, electrical circuitry having at least one integrated circuit, electrical circuitry having at least one application specific integrated circuit, electrical circuitry forming a general purpose computing device configured by a computer program (e.g., a general purpose computer configured by a computer program which at least partially carries out processes and/or devices described herein, or a microprocessor configured by a computer program which at least partially carries out processes and/or devices described herein), electrical circuitry forming a memory device (e.g., forms of random access memory), electrical circuitry forming a communications device (e.g., a modem, communications switch, or optical-electrical equipment), and any non-electrical analog thereto, such as optical or other analogs. Those skilled in the art will recognize that electro-mechanical as used herein is not necessarily limited to a system that has both electrical and mechanical actuation except as context may dictate otherwise. Non-electrical analogs of electrical circuitry may include fluid circuitry, electro-mechanical circuitry, mechanical circuitry, and various combinations thereof.

In a general sense, those skilled in the art will recognize that the various aspects described herein which can be implemented, individually and/or collectively, by a wide range of hardware, software, firmware, or any combination thereof can be viewed as being composed of various types of "electrical circuitry." Consequently, as used herein "electrical circuitry" includes, but is not limited to, electrical circuitry having at least one discrete electrical circuit, electrical circuitry having at least one integrated circuit, electrical circuitry having at least one application specific integrated circuit, electrical circuitry forming a general purpose computing device configured by a computer program (e.g., a general purpose computer configured by a computer program which at least partially carries out processes and/or devices described herein, or a microprocessor configured by a computer program which at least partially carries out processes and/or devices described herein), electrical circuitry forming a memory device (e.g., forms of random access memory), and/or electrical circuitry forming a communications device (e.g., a modem, communications switch, or optical-electrical equipment). Those having skill in the art will recognize that the subject matter described herein may be implemented in an analog or digital fashion or some combination thereof.

One skilled in the art will recognize that the herein described components (e.g., steps), devices, and objects and the discussion accompanying them are used as examples for the sake of conceptual clarity and that various configuration modifications are within the skill of those in the art. Consequently, as used herein, the specific exemplars set forth and the accompanying discussion are intended to be representative of their more general classes. In general, use of any specific exemplar herein is also intended to be representative of its class, and the non-inclusion of such specific components (e.g., steps), devices, and objects herein should not be taken as indicating that limitation is desired.

With respect to the use of substantially any plural and/or singular terms herein, those having skill in the art can translate from the plural to the singular and/or from the singular to the plural as is appropriate to the context and/or application. The various singular/plural permutations are not expressly set forth herein for sake of clarity.

The herein described subject matter sometimes illustrates different components contained within, or connected with, different other components. It is to be understood that such depicted architectures are merely exemplary, and that in fact many other architectures can be implemented which achieve the same functionality. In a conceptual sense, any arrangement of components to achieve the same functionality is effectively "associated" such that the desired functionality is achieved. Hence, any two components herein combined to achieve a particular functionality can be seen as "associated with" each other such that the desired functionality is achieved, irrespective of architectures or intermedial components. Likewise, any two components so associated can also be viewed as being "operably connected", or "operably coupled", to each other to achieve the desired functionality, and any two components capable of being so associated can also be viewed as being "operably couplable", to each other to achieve the desired functionality. Specific examples of operably couplable include but are not limited to physically mateable and/or physically interacting components and/or wirelessly interactable and/or wirelessly interacting components and/or logically interacting and/or logically interactable components.

While particular aspects of the present subject matter described herein have been shown and described, it will be apparent to those skilled in the art that, based upon the teachings herein, changes and modifications may be made without departing from the subject matter described herein and its broader aspects and, therefore, the appended claims are to encompass within their scope all such changes and modifications as are within the true spirit and scope of the subject matter described herein. Furthermore, it is to be understood that the invention is defined by the appended claims. It will be understood by those within the art that, in general, terms used herein, and especially in the appended claims (e.g., bodies of the appended claims) are generally intended as "open" terms (e.g., the term "including" should be interpreted as "including but not limited to," the term "having" should be interpreted as "having at least," the term "includes" should be interpreted as "includes but is not limited to," etc.). It will be further understood by those

within the art that if a specific number of an introduced claim recitation is intended, such an intent will be explicitly recited in the claim, and in the absence of such recitation no such intent is present. For example, as an aid to understanding, the following appended claims may contain usage of the introductory phrases "at least one" and "one or more" to introduce claim recitations. However, the use of such phrases should not be construed to imply that the introduction of a claim recitation by the indefinite articles "a" or "an" limits any particular claim containing such introduced claim recitation to inventions containing only one such recitation, even when the same claim includes the introductory phrases "one or more" or "at least one" and indefinite articles such as "a" or "an" (e.g., "a" and/or "an" should typically be interpreted to mean "at least one" or "one or more"); the same holds true for the use of definite articles used to introduce claim recitations. In addition, even if a specific number of an introduced claim recitation is explicitly recited, those skilled in the art will recognize that such recitation should typically be interpreted to mean at least the recited number (e.g., the bare recitation of "two recitations," without other modifiers, typically means at least two recitations, or two or more recitations). Furthermore, in those instances where a convention analogous to "at least one of A, B, and C, etc." is used, in general such a construction is intended in the sense one having skill in the art would understand the convention (e.g., "a system having at least one of A, B, and C" would include but not be limited to systems that have A alone, B alone, C alone, A and B together, A and C together, B and C together, and/or A, B, and C together, etc.). In those instances where a convention analogous to "at least one of A, B, or C, etc." is used, in general such a construction is intended in the sense one having skill in the art would understand the convention (e.g., "a system having at least one of A, B, or C" would include but not be limited to systems that have A alone, B alone, C alone, A and B together, A and C together, B and C together, and/or A, B, and C together, etc.). It will be further understood by those within the art that virtually any disjunctive word and/or phrase presenting two or more alternative terms, whether in the description, claims, or drawings, should be understood to contemplate the possibilities of including one of the terms, either of the terms, or both terms. For example, the phrase "A or B" will be understood to include the possibilities of "A" or "B" or "A and B."

While various aspects and embodiments have been disclosed herein, other aspects and embodiments will be apparent to those skilled in the art. The various aspects and embodiments disclosed herein are for purposes of illustration and are not intended to be limiting, with the true scope and spirit being indicated by the following claims.

What is claimed is:

1. A lumen-traveling device, comprising:

a propelling mechanism capable of producing directional movement of the lumen-traveling device through a body lumen by producing relative extension and retraction of at least two lumen-wall-engaging structures with respect to each other in combination with alternate engagement and disengagement of at least one wall of the body lumen;

a steering mechanism capable of modifying a direction of movement of the lumen-traveling device;

a structural element configured to at least intermittently permit the movement of fluid through the lumen-traveling device;

at least one electromagnetic transducer configured for at least one of producing an output signal representative of a bioelectromagnetic signal sensed from a target tissue, the bioelectromagnetic signal generated by a biological signal source in the target tissue, and delivering a non-ablative electromagnetic stimulus to the target tissue; and

at least one of a signal processing portion capable of processing the output signal from the electromagnetic transducer and a stimulus source capable of producing the electromagnetic stimulus for delivery to the target tissue with the electromagnetic transducer.

2. The lumen-traveling device of claim **1**, including at least one wall-engaging structure capable of engaging a wall of the body lumen to secure the lumen-traveling stimulation device with respect to the wall of the body lumen in the vicinity of the target tissue.

3. The lumen-traveling device of claim **1**, including at least one electromagnetic transducer configured for producing an output signal representative of a bioelectromagnetic signal sensed from a target tissue, and at least one signal processing portion capable of processing the output signal from the electromagnetic transducer.

4. The lumen-traveling device of claim **1**, including at least one electromagnetic transducer configured for delivering an electromagnetic stimulus to the target tissue, and at least one stimulus source capable of producing an electromagnetic stimulus for delivery to the target tissue with the electromagnetic transducer.

5. The lumen-traveling device of claim **1**, including at least one electromagnetic transducer configured for producing an output signal representative of a bioelectromagnetic signal sensed from a target tissue, at least one electromagnetic transducer configured for delivering an electromagnetic stimulus to the target tissue; at least one signal processing portion capable of processing the output signal from the electromagnetic transducer, and at least one stimulus source capable of producing an electromagnetic stimulus for delivery to the target tissue with the electromagnetic transducer.

6. The lumen-traveling device of claim **5**, including at least one electromagnetic transducer configured for producing an output signal representative of a bioelectromagnetic signal sensed from a target tissue and delivering an electromagnetic stimulus to the target tissue.

7. The lumen-traveling device of claim **1**, including a receiver configured to receive a signal from a remote portion.

8. The lumen-traveling device of claim **1**, including a power source.

9. The lumen-traveling device of claim **8**, wherein the power source includes at least one of a battery, a microbattery, a fuel cell, a biofuel cell, an inductively driven power receiving structure driven by a remotely applied electromagnetic field, an energy scavenging device, an energy scavenging device capable of transducing energy from blood flow, an energy scavenging device capable of transducing energy from heart motion, an energy scavenging device capable of transducing energy from gastrointestinal tract motion, an energy scavenging device capable of transducing energy from pulmonary motion, or an energy scavenging device capable of transducing energy from muscle motion.

10. The lumen-traveling device of claim **1**, including:

multiple electromagnetic transducers configured for at least one of producing an output signal representative of a bioelectromagnetic signal sensed from the target tissue or delivering an electromagnetic stimulus to the target tissue.

11. The lumen-traveling device of claim 1, including sensing a plurality of biolectromagnetic signals with the self-propelling bioelectromagnetic signal sensing device, wherein each of the plurality of bioelectromagnetic signals is sensed with a respective electromagnetic transducer of a plurality of electromagnetic transducers carried by the self-propelling bioelectromagnetic signal sensing device.

12. The lumen-traveling device of claim 1, wherein the at least one electromagnetic transducer includes at least one of an electrode, a coil, a Hall effect sensor, an antenna, an electromagnetic field source, an ion-sensitive device, a light source, a laser diode, a laser, a light emitting diode or a photodiode.

13. The lumen-traveling device of claim 1, including at least one of control circuitry carried by the lumen-traveling device or control circuitry located at least in part on the lumen-traveling device.

14. The lumen-traveling device of claim 1, wherein the lumen-traveling device is sized to fit within at least one of a blood vessel in a brain or a chamber of a heart.

15. The lumen-traveling device of claim 1, including at least one stimulus source capable of producing the electromagnetic stimulus for delivery to the target tissue with the electromagnetic transducer, wherein the electromagnetic stimulus is adapted for at least one of controlling or modifying heart activity or controlling or modifying neural activity.

16. The lumen-traveling device of claim 1, including at least one stimulus source capable of producing the electromagnetic stimulus for delivery to the target tissue with the electromagnetic transducer, wherein the electromagnetic stimulus is at least one of a depolarizing stimulus sufficient to produce depolarization of at least a portion of the target tissue, a hyperpolarizing stimulus sufficient to produce hyperpolarization of at least a portion of the target tissue, a promoting stimulus sufficient to produce a functionally promoting effect in at least a portion of the target tissue, or an inhibiting stimulus sufficient to produce a functionally inhibiting effect in at least a portion of the target tissue.

17. The lumen-traveling device of claim 1, including at least one stimulus source capable of at least one of producing an electromagnetic stimulus for delivery to the target tissue with the electromagnetic transducer based at least in part upon a pre-programmed stimulation pattern or producing an electromagnetic stimulus for delivery to the target tissue with the electromagnetic transducer at least in part in response to a signal received from a remote portion.

18. The lumen-traveling device of claim 1, including:

at least one signal processing portion capable of processing the output signal from the electromagnetic transducer, wherein the at least one signal processing portion is capable of processing the output signal from the electromagnetic transducer by at least one of amplifying the output signal, filtering the output signal, or performing feature detection/pattern recognition on the output signal.

19. The lumen-traveling device of claim 1, including:

at least one signal processing portion capable of processing the output signal from the electromagnetic transducer; and

at least one of a data storage location configured for storing an output of the at least one signal processing portion or a transmitter configured to transmit an output of the at least one signal processing portion to a remote location.

20. The lumen-traveling device of claim 1, including:

at least one transmitter configured to transmit information to a remote location, wherein the information relates to at least one of the status of the lumen-traveling device, the location or position of the lumen-traveling device, an action taken by the lumen-traveling device, or the delivery of the electromagnetic stimulus to the target tissue.

21. A lumen-traveling device, comprising:

a propelling mechanism capable of producing directional movement of the lumen-traveling device through a body lumen by producing relative extension and retraction of at least two lumen-wall-engaging structures with respect to each other in combination with alternate engagement and disengagement of at least one wall of the body lumen;

at least one structural element configured to at least intermittently permit the movement of fluid through the lumen-traveling device;

a steering mechanism capable of modifying a direction of movement of the lumen-traveling device;

at least one electromagnetic transducer configured for at least one of producing an output signal representative of a bioelectromagnetic signal sensed from a target tissue, the bioelectromagnetic signal generated by a biological signal source in the target tissue, and delivering a non-ablative electromagnetic stimulus to the target tissue;

at least one of a signal processing portion capable of processing the output signal from the electromagnetic transducer and a stimulus source capable of producing the electromagnetic stimulus for delivery to the target tissue with the electromagnetic transducer; and

a sensor capable of sensing a local condition and generating a sense signal.

22. The lumen-traveling device of claim 21, wherein the stimulus source is capable of producing an electromagnetic stimulus for delivery to the target tissue with the electromagnetic transducer at least in part in response to the sense signal from the sensor.

23. The lumen-traveling device of claim 21, wherein the sensor includes at least one of an optical sensor, an imaging device, a thermal sensor, a chemical sensor, an electrical sensor, or a magnetic sensor.

24. The lumen-traveling device of claim 21, wherein the local condition is indicative of at least one of proximity to the target tissue or an anatomical feature.

* * * * *