US009838078B2

(12) United States Patent
Bennett et al.

(10) Patent No.: US 9,838,078 B2
(45) Date of Patent: *Dec. 5, 2017

(54) **METHOD AND APPARATUS FOR EXCHANGING COMMUNICATION SIGNALS**

(71) Applicant: **AT&T INTELLECTUAL PROPERTY I, L.P.**, Atlanta, GA (US)

(72) Inventors: **Robert Bennett**, Southold, NY (US); **Paul Shala Henry**, Holmdel, NJ (US); **Farhad Barzegar**, Branchburg, NJ (US); **Irwin Gerszberg**, Kendall Park, NJ (US); **Donald J Barnickel**, Flemington, NJ (US); **Thomas M. Willis, III**, Tinton Falls, NJ (US)

(73) Assignee: **AT&T Intellectual Property I, L.P.**, Atlanta, GA (US)

(*) Notice: Subject to any disclaimer, the term of this patent is extended or adjusted under 35 U.S.C. 154(b) by 0 days.

This patent is subject to a terminal disclaimer.

(21) Appl. No.: **15/250,345**

(22) Filed: **Aug. 29, 2016**

(65) **Prior Publication Data**

US 2017/0033835 A1 Feb. 2, 2017

Related U.S. Application Data

(63) Continuation of application No. 14/815,019, filed on Jul. 31, 2015, now Pat. No. 9,461,706.

(51) **Int. Cl.**
H04B 3/00 (2006.01)
H04B 3/54 (2006.01)
(Continued)

(52) **U.S. Cl.**
CPC ***H04B 3/54*** (2013.01); ***H04B 3/50*** (2013.01); ***H04B 3/52*** (2013.01); *H04B 2203/5466* (2013.01); *H04B 2203/5483* (2013.01)

(58) **Field of Classification Search**
CPC H04L 25/0266; H04L 25/0272; H04L 25/0292; H04B 1/38; H04B 3/54;
(Continued)

(56) **References Cited**

U.S. PATENT DOCUMENTS

395,814 A 1/1889 Henry et al.
529,290 A 11/1894 Harry et al.
(Continued)

FOREIGN PATENT DOCUMENTS

AU 565039 B2 9/1987
AU 582630 B2 4/1989
(Continued)

OTHER PUBLICATIONS

International Search Report and Written Opinion in PCT/US2016/028417, dated Jul. 5, 2016, 13 pages, Authorized officer Brigitte Bettiol.

(Continued)

Primary Examiner — Khanh C Tran
(74) *Attorney, Agent, or Firm* — Guntin & Gust, PLC; Douglas Schnabel

(57) **ABSTRACT**

Aspects of the subject disclosure may include, for example, receiving, by each of a plurality of receivers, one of a plurality of electromagnetic waves, each electromagnetic wave of the plurality of electromagnetic waves guided by a different one of a plurality of twin-lead transmission lines, each twin-lead transmission line sharing a wire, and each electromagnetic wave of the plurality of electromagnetic waves including a different one of a plurality of communication signals, and obtaining, by each of the plurality of receivers, one of the plurality of communication signals. Other embodiments are disclosed.

20 Claims, 24 Drawing Sheets

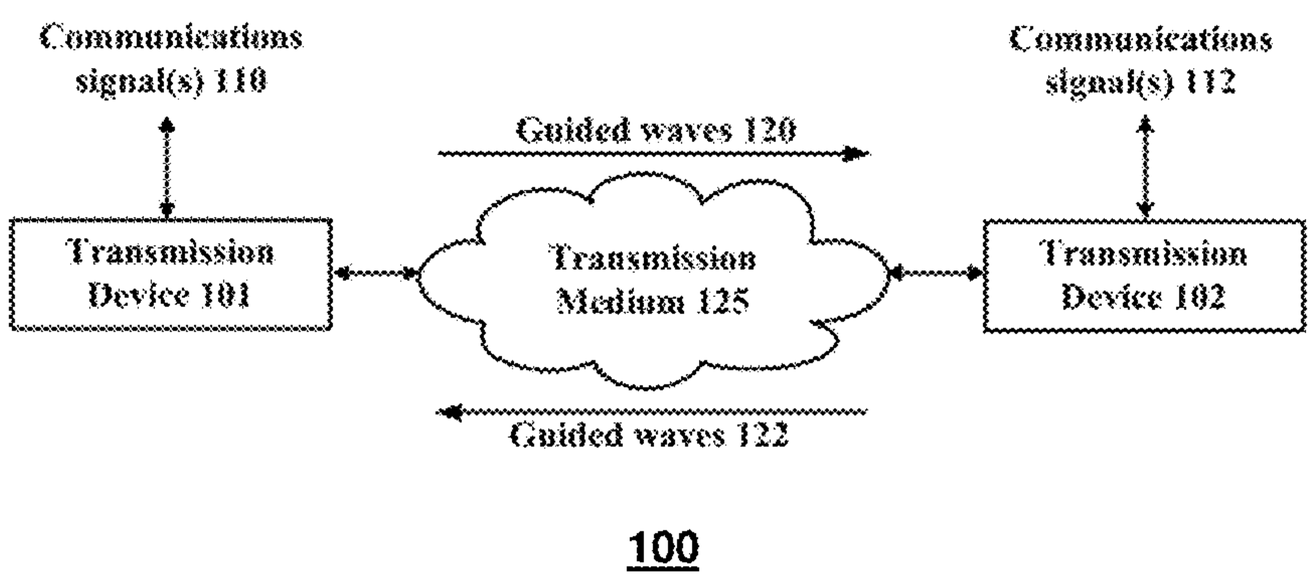

(51) **Int. Cl.**
H04B 3/50 (2006.01)
H04B 3/52 (2006.01)

(58) **Field of Classification Search**
CPC H04B 3/542; H04B 3/56; H04B 5/0025; H04B 5/0018
USPC 375/211, 219–220, 257, 259, 285, 295, 375/316
See application file for complete search history.

(56) **References Cited**

U.S. PATENT DOCUMENTS

1,721,785 A 7/1929 Meyer
1,798,613 A 3/1931 Manson et al.
1,860,123 A 5/1932 Yagi
2,058,611 A 10/1936 Merkle et al.
2,106,770 A 2/1938 Southworth et al.
2,129,711 A 9/1938 Southworth
2,129,714 A 9/1938 Southworth et al.
2,147,717 A 2/1939 Schelkunoff
2,187,908 A 1/1940 McCreary
2,199,083 A 4/1940 Schelkunoff
2,232,179 A 2/1941 King
2,283,935 A 5/1942 King
2,398,095 A 4/1946 Katzin
2,402,622 A 6/1946 Hansen
2,405,242 A 8/1946 Southworth et al.
2,407,068 A 9/1946 Fiske et al.
2,407,069 A 9/1946 Fiske
2,410,113 A 10/1946 Edwin, Jr.
2,411,338 A 11/1946 Roberts
2,415,089 A 2/1947 Feldman et al.
2,415,807 A 2/1947 Barrow et al.
2,419,205 A 4/1947 Feldman et al.
2,420,007 A 5/1947 Olden
2,422,058 A 6/1947 Whinnery
2,432,134 A 12/1947 Bagnall
2,461,005 A 2/1949 Southworth
2,471,021 A 5/1949 Bradley
2,488,400 A 11/1949 Harder
2,513,205 A 6/1950 Roberts et al.
2,514,679 A 7/1950 Southworth
2,519,603 A 8/1950 Reber
2,540,839 A 2/1951 Southworth
2,541,843 A 2/1951 Tiley et al.
2,542,980 A 2/1951 Barrow
2,557,110 A 6/1951 Jaynes
2,562,281 A 7/1951 Mumford
2,596,190 A 5/1952 Wiley
2,599,864 A 6/1952 Robertson-Shersby-Ha et al.
2,659,817 A 11/1953 Cutler et al.
2,667,578 A 1/1954 Carlson et al.
2,677,055 A 4/1954 Allen
2,685,068 A 7/1954 Goubau
2,688,732 A 9/1954 Kock
2,691,766 A 10/1954 Clapp
2,706,279 A 4/1955 Aron
2,711,514 A 6/1955 Rines
2,723,378 A 11/1955 Clavier et al.
2,727,232 A 12/1955 Pryga
2,735,092 A 2/1956 Brown
2,737,632 A 3/1956 Grieg et al.
2,740,826 A 4/1956 Bondon
2,745,101 A 5/1956 Marie
2,748,350 A 5/1956 Miller et al.
2,749,545 A 6/1956 Kostriza
2,754,513 A 7/1956 Goubau
2,761,137 A 8/1956 Atta et al.
2,769,147 A 10/1956 Black et al.
2,769,148 A 10/1956 Clogston et al.
2,770,783 A 11/1956 Thomas et al.
2,794,959 A 6/1957 Fox
2,805,415 A 9/1957 Berkowitz
2,806,177 A 9/1957 Haeff et al.
2,806,972 A 9/1957 Sensiper
2,810,111 A 10/1957 Cohn
2,819,451 A 1/1958 Sims et al.
2,820,083 A 1/1958 Hendrix
2,825,060 A 2/1958 Ruze et al.
2,835,871 A 5/1958 Raabe
2,851,686 A 9/1958 Hagaman et al.
2,867,776 A 1/1959 Wilkinson, Jr.
2,883,135 A 4/1959 Smalley et al.
2,883,136 A 4/1959 Smalley et al.
2,900,558 A 8/1959 Watkins et al.
2,910,261 A 10/1959 Ward et al.
2,912,695 A 11/1959 Cutler
2,914,741 A 11/1959 Unger
2,915,270 A 12/1959 Gladsden et al.
2,921,277 A 1/1960 Goubau
2,925,458 A 2/1960 Lester et al.
2,933,701 A 4/1960 Lanctot et al.
2,946,970 A 7/1960 Hafner et al.
2,949,589 A 8/1960 Hafner
2,960,670 A 11/1960 Marcatili et al.
2,970,800 A 2/1961 Smalley et al.
2,972,148 A 2/1961 Rupp et al.
2,974,297 A 3/1961 Ros
2,981,949 A 4/1961 Elliott et al.
2,990,151 A 6/1961 Phillips et al.
2,993,205 A 7/1961 Cooper et al.
3,016,520 A 1/1962 Chaimowicz et al.
3,025,478 A 3/1962 Marcatali et al.
3,028,565 A 4/1962 Walker et al.
3,040,278 A 6/1962 Griemsmann et al.
3,045,238 A 7/1962 Cheston et al.
3,046,550 A 7/1962 Schlaud et al.
3,047,822 A 7/1962 Lakatos et al.
3,065,945 A 11/1962 Newsome et al.
3,072,870 A 1/1963 Walker
3,077,569 A 2/1963 Ikrath et al.
3,096,462 A 7/1963 Feinstein et al.
3,101,472 A 8/1963 Goubau
3,109,175 A 10/1963 Lloyd
3,129,356 A 4/1964 Phillips
3,134,951 A 5/1964 Huber et al.
3,146,297 A 8/1964 Hahne
3,146,453 A 8/1964 Hagaman
3,201,724 A 8/1965 Hafner
3,205,462 A 9/1965 Meinke
3,218,384 A 11/1965 Shaw
3,219,954 A 11/1965 Rutelli
3,234,559 A 2/1966 Bartholoma et al.
3,255,454 A 6/1966 Walter et al.
3,296,364 A 1/1967 Jefferson et al.
3,296,685 A 1/1967 Menahem et al.
3,310,808 A 3/1967 Friis et al.
3,316,344 A 4/1967 Toms et al.
3,316,345 A 4/1967 Toms et al.
3,318,561 A 5/1967 Robertson, Jr. et al.
3,321,763 A 5/1967 Ikrath et al.
3,329,958 A 7/1967 Anderson et al.
3,351,947 A 11/1967 Hart et al.
3,355,738 A 11/1967 Algeo et al.
3,369,788 A 2/1968 Eisele
3,389,394 A 6/1968 Lewis et al.
3,392,388 A 7/1968 Tsuneo et al.
3,392,395 A 7/1968 Hannan
3,411,112 A 11/1968 Honig et al.
3,413,637 A 11/1968 Goebels, Jr. et al.
3,413,642 A 11/1968 Cook
3,414,903 A 12/1968 Bartlett et al.
3,419,827 A 12/1968 Webb et al.
3,420,596 A 1/1969 Osterberg
3,427,573 A 2/1969 White et al.
3,448,455 A 6/1969 Alfandari et al.
3,453,617 A 7/1969 Brickey et al.
3,459,873 A 8/1969 Harris et al.
3,465,346 A 9/1969 Patterson et al.
3,474,995 A 10/1969 Amidon et al.
3,482,251 A 12/1969 Bowes
3,487,158 A 12/1969 Killian
3,495,262 A 2/1970 Robert et al.
3,500,422 A 3/1970 Grady et al.

(56) **References Cited**

U.S. PATENT DOCUMENTS

3,509,463	A	4/1970	Woodward et al.
3,522,560	A	8/1970	Hayany
3,524,192	A	8/1970	Sakiotis et al.
3,529,205	A	9/1970	Miller
3,530,481	A	9/1970	Tanaka et al.
3,531,803	A	9/1970	Hudspeth et al.
3,536,800	A	10/1970	Hubbard
3,555,553	A	1/1971	Boyns
3,557,341	A	1/1971	Sochilin et al.
3,566,317	A	2/1971	Hafner
3,568,204	A	3/1971	Blaisdell
3,569,979	A	3/1971	Munk et al.
3,573,838	A	4/1971	Ajioka
3,588,754	A	6/1971	Hafner
3,588,755	A	6/1971	Kunio et al.
3,589,121	A	6/1971	Mulvey
3,594,494	A	7/1971	Sullivan
3,599,219	A	8/1971	Hansen et al.
3,603,904	A	9/1971	Hafner
3,603,951	A	9/1971	Bracken et al.
3,609,247	A	9/1971	Halstead
3,623,114	A	11/1971	Seaton
3,624,655	A	11/1971	Yamada et al.
3,638,224	A	1/1972	Bailey et al.
3,653,622	A	4/1972	Farmer
3,666,902	A	5/1972	Owen et al.
3,668,459	A	6/1972	Symons et al.
3,668,574	A	6/1972	Barlow
3,672,202	A	6/1972	Barber et al.
3,683,299	A	8/1972	Vzyatyshev et al.
3,686,596	A	8/1972	Albee
3,693,922	A	9/1972	Gueguen
3,699,574	A	10/1972	Plunk et al.
3,703,690	A	11/1972	Ravenscroft et al.
3,704,001	A	11/1972	Sloop
3,725,937	A	4/1973	Schreiber
3,753,086	A	8/1973	Shoemaker et al.
3,760,127	A	9/1973	Grossi et al.
3,765,021	A	10/1973	Chiron et al.
3,772,528	A	11/1973	Anderson et al.
3,775,769	A	11/1973	Heeren et al.
3,787,872	A	1/1974	Kauffman
3,796,970	A	3/1974	Snell
3,806,931	A	4/1974	Wright
3,833,909	A	9/1974	Schaufelberger
3,835,407	A	9/1974	Yariv et al.
3,845,426	A	10/1974	Barlow
3,858,214	A	12/1974	Jones
3,877,032	A	4/1975	Rosa
3,888,446	A	6/1975	O'Brien et al.
3,896,380	A	7/1975	Martin
3,906,508	A	9/1975	Foldes
3,911,415	A	10/1975	Whyte
3,921,949	A	11/1975	Coon
3,925,763	A	12/1975	Wadhwani
3,935,577	A	1/1976	Hansen et al.
3,936,836	A	2/1976	Wheeler et al.
3,936,838	A	2/1976	Foldes et al.
3,952,984	A	4/1976	Dimitry et al.
3,956,751	A	5/1976	Herman
3,959,794	A	5/1976	Chrepta et al.
3,973,087	A	8/1976	Fong et al.
3,973,240	A	8/1976	Fong et al.
3,976,358	A	8/1976	Thompson et al.
3,983,560	A	9/1976	MacDougall et al.
4,010,799	A	3/1977	Kern et al.
4,012,743	A	3/1977	Maciejewski et al.
4,020,431	A	4/1977	Saunders et al.
4,026,632	A	5/1977	Hill et al.
4,030,048	A	6/1977	Foldes et al.
4,030,953	A	6/1977	Rutschow et al.
4,031,536	A	6/1977	Alford et al.
4,035,054	A	7/1977	Lattanzi et al.
4,047,180	A	9/1977	Kuo et al.
4,079,361	A	3/1978	Woode et al.
4,080,600	A	3/1978	Toman et al.
4,099,184	A	7/1978	Rapshys et al.
4,114,121	A	9/1978	Barlow et al.
4,115,782	A	9/1978	Han et al.
4,123,759	A	10/1978	Hines et al.
4,125,768	A	11/1978	Jackson et al.
4,129,841	A	12/1978	Hildebrand et al.
4,129,872	A	12/1978	Toman et al.
4,141,015	A	2/1979	Wong et al.
4,149,170	A	4/1979	Campbell et al.
4,155,108	A	5/1979	Tuttle et al.
4,156,241	A	5/1979	Mobley et al.
4,166,669	A	9/1979	Leonberger et al.
4,175,257	A	11/1979	Smith et al.
4,188,595	A	2/1980	Cronson et al.
4,190,137	A	2/1980	Shimada et al.
4,191,953	A	3/1980	Woode et al.
4,195,302	A	3/1980	Leupelt et al.
4,210,357	A	7/1980	Adachi et al.
4,216,449	A	8/1980	Kach
4,220,957	A	9/1980	Britt et al.
4,231,042	A	10/1980	Turrin et al.
4,234,753	A	11/1980	Clutter
4,238,974	A	12/1980	Fawcett et al.
4,246,584	A	1/1981	Noerpel et al.
4,247,858	A	1/1981	Eichweber et al.
4,250,489	A	2/1981	Dudash et al.
4,268,804	A	5/1981	Spinner et al.
4,274,097	A	6/1981	Krall et al.
4,274,112	A	6/1981	Leysieffer et al.
4,278,955	A	7/1981	Lunden et al.
4,293,833	A	10/1981	Popa et al.
4,298,877	A	11/1981	Sletten et al.
4,300,242	A	11/1981	Nava et al.
4,307,938	A	12/1981	Dyott et al.
4,316,646	A	2/1982	Siebens et al.
4,319,074	A	3/1982	Yaste et al.
4,329,690	A	5/1982	Parker et al.
4,333,082	A	6/1982	Susman et al.
4,335,613	A	6/1982	Luukkala et al.
4,336,719	A	6/1982	Lynnworth
4,345,256	A	8/1982	Rainwater et al.
4,366,565	A	12/1982	Herskowitz
4,367,446	A	1/1983	Hall et al.
4,378,143	A	3/1983	Winzer et al.
4,384,289	A	5/1983	Fernandes et al.
4,398,058	A	8/1983	Gerth et al.
4,398,121	A	8/1983	Chodorow et al.
4,413,263	A	11/1983	Amitay et al.
4,447,811	A	5/1984	Hamid et al.
4,458,250	A	7/1984	Bodnar et al.
4,463,329	A	7/1984	Suzuki et al.
4,468,672	A	8/1984	Dragone et al.
4,475,209	A	10/1984	Udren
4,477,814	A	10/1984	Brumbaugh et al.
4,482,899	A	11/1984	Dragone et al.
4,488,156	A	12/1984	DuFort et al.
4,491,386	A	1/1985	Negishi et al.
4,495,498	A	1/1985	Petrelis et al.
4,516,130	A	5/1985	Dragone
4,525,432	A	6/1985	Saito et al.
4,525,693	A	6/1985	Suzuki et al.
4,533,875	A	8/1985	Lau et al.
4,541,303	A	9/1985	Kuzunishi et al.
4,550,271	A	10/1985	Lau et al.
4,553,112	A	11/1985	Saad et al.
4,556,271	A	12/1985	Hubbard
4,558,325	A	12/1985	Stroem et al.
4,565,348	A	1/1986	Larsen
4,566,012	A	1/1986	Choung et al.
4,567,401	A	1/1986	Barnett et al.
4,568,943	A	2/1986	Bowman
4,573,215	A	2/1986	Oates et al.
4,580,116	A	4/1986	Ballato et al.
4,589,424	A	5/1986	Vaguine et al.
4,598,262	A	7/1986	Chen et al.
4,599,598	A	7/1986	Komoda et al.
4,604,624	A	8/1986	Amitay et al.
4,604,627	A	8/1986	Saad et al.

(56) **References Cited**

U.S. PATENT DOCUMENTS

4,605,914	A	8/1986	Harman et al.
4,618,867	A	10/1986	Gans et al.
4,634,858	A	1/1987	Gerdt et al.
4,636,753	A	1/1987	Geller et al.
4,638,322	A	1/1987	Lamberty et al.
4,641,916	A	2/1987	Oestreich et al.
4,642,651	A	2/1987	Kuhn et al.
4,644,365	A	2/1987	Horning et al.
4,647,329	A	3/1987	Oono et al.
4,660,050	A	4/1987	Phillips et al.
4,665,660	A	5/1987	Krall et al.
4,672,384	A	6/1987	Roy et al.
4,673,943	A	6/1987	Hannan
4,680,558	A	7/1987	Ghosh et al.
4,694,599	A	9/1987	Hart et al.
4,704,611	A	11/1987	Edwards et al.
4,715,695	A	12/1987	Nishimura et al.
4,717,974	A	1/1988	Baumeister et al.
4,730,172	A	3/1988	Bengeult
4,730,888	A	3/1988	Darcie et al.
4,731,810	A	3/1988	Watkins
4,735,097	A	4/1988	Lynnworth et al.
4,743,915	A	5/1988	Rammos et al.
4,743,916	A	5/1988	Bengeult
4,745,377	A	5/1988	Stern et al.
4,746,241	A	5/1988	Burbank, III et al.
4,749,244	A	6/1988	Luh
4,755,830	A	7/1988	Plunk et al.
4,757,324	A	7/1988	Dhanjal et al.
4,758,962	A	7/1988	Fernandes
4,764,738	A	8/1988	Fried et al.
4,772,891	A	9/1988	Svy
4,777,457	A	10/1988	Ghosh et al.
4,785,304	A	11/1988	Stern et al.
4,786,911	A	11/1988	Svy et al.
4,786,913	A	11/1988	Barendregt et al.
4,788,553	A	11/1988	Phillips et al.
4,792,771	A	12/1988	Siu et al.
4,792,812	A	12/1988	Rinehart et al.
4,799,031	A	1/1989	Lang et al.
4,800,350	A	1/1989	Bridges et al.
4,801,937	A	1/1989	Fernandes
4,808,950	A	2/1989	Apostolos et al.
4,818,963	A	4/1989	Green et al.
4,818,990	A	4/1989	Fernandes
4,825,221	A	4/1989	Suzuki et al.
4,829,310	A	5/1989	Losee et al.
4,829,314	A	5/1989	Barbier et al.
4,831,346	A	5/1989	Brooker et al.
4,832,148	A	5/1989	Becker et al.
4,835,517	A	5/1989	van der Gracht et al.
4,839,659	A	6/1989	Stern et al.
4,845,508	A	7/1989	Krall et al.
4,847,610	A	7/1989	Ozawa et al.
4,849,611	A	7/1989	Whitney et al.
4,851,788	A	7/1989	Ives et al.
4,855,749	A	8/1989	DeFonzo et al.
4,866,454	A	9/1989	Droessler et al.
4,873,534	A	10/1989	Wohlleben et al.
4,875,026	A	10/1989	Walter et al.
4,879,544	A	11/1989	Maki et al.
4,881,028	A	11/1989	Bright et al.
4,886,980	A	12/1989	Fernandes et al.
4,897,663	A	1/1990	Kusano et al.
4,904,996	A	2/1990	Fernandes
4,915,468	A	4/1990	Kim et al.
4,916,460	A	4/1990	Powell et al.
4,922,180	A	5/1990	Saffer et al.
4,929,962	A	5/1990	Begout et al.
4,931,808	A	6/1990	Munson et al.
4,932,620	A	6/1990	Foy
4,946,202	A	8/1990	Perricone et al.
4,965,856	A	10/1990	Swanic
4,977,593	A	12/1990	Ballance
4,977,618	A	12/1990	Allen
4,989,011	A	1/1991	Rosen et al.
4,998,095	A	3/1991	Shields
5,003,318	A	3/1991	Hall et al.
5,006,846	A	4/1991	Granville et al.
5,006,859	A	4/1991	Wong et al.
5,015,914	A	5/1991	Ives et al.
5,017,936	A	5/1991	Massey et al.
5,017,937	A	5/1991	Newham et al.
5,018,180	A	5/1991	Shoulders
5,019,832	A	5/1991	Ekdahl et al.
5,036,335	A	7/1991	Jairam et al.
H956	H	8/1991	Reindel
5,042,903	A	8/1991	Jakubowski et al.
5,043,538	A	8/1991	Hughey et al.
5,043,629	A	8/1991	Doane et al.
5,044,722	A	9/1991	Voser et al.
5,045,820	A	9/1991	Oehlerking et al.
5,057,106	A	10/1991	Kasevich et al.
5,065,760	A	11/1991	Krause et al.
5,065,969	A	11/1991	McLean et al.
5,072,228	A	12/1991	Kuwahara et al.
5,082,349	A	1/1992	Cordova-Plaza et al.
5,086,467	A	2/1992	Malek
5,107,231	A	4/1992	Knox et al.
5,109,232	A	4/1992	Monte et al.
5,113,197	A	5/1992	Luh et al.
5,117,237	A	5/1992	Legg
5,121,129	A	6/1992	Lee et al.
5,126,750	A	6/1992	Wang et al.
5,132,968	A	7/1992	Cephus
5,134,251	A	7/1992	Martin et al.
5,134,423	A	7/1992	Haupt et al.
5,134,965	A	8/1992	Tokuda et al.
5,136,671	A	8/1992	Dragone et al.
5,142,767	A	9/1992	Adams et al.
5,148,509	A	9/1992	Kannabiran et al.
5,152,861	A	10/1992	Hann
5,153,676	A	10/1992	Bergh et al.
5,166,698	A	11/1992	Ashbaugh et al.
5,174,164	A	12/1992	Wilheim et al.
5,175,560	A	12/1992	Lucas et al.
5,182,427	A	1/1993	McGaffigan et al.
5,187,409	A	2/1993	Ito et al.
5,193,774	A	3/1993	Rogers et al.
5,198,823	A	3/1993	Litchford et al.
5,212,755	A	5/1993	Holmberg et al.
5,214,394	A	5/1993	Wong et al.
5,214,438	A	5/1993	Smith et al.
5,216,616	A	6/1993	Masters
5,218,657	A	6/1993	Tokudome et al.
5,235,662	A	8/1993	Prince et al.
5,239,537	A	8/1993	Sakauchi
5,241,321	A	8/1993	Tsao
5,241,701	A	8/1993	Andoh et al.
5,248,876	A	9/1993	Kerstens et al.
5,254,809	A	10/1993	Martin
5,265,266	A	11/1993	Trinh
5,266,961	A	11/1993	Milroy et al.
5,276,455	A	1/1994	Fitzsimmons et al.
5,278,687	A	1/1994	Jannson et al.
5,280,297	A	1/1994	Profera et al.
5,291,211	A	3/1994	Tropper et al.
5,298,911	A	3/1994	Li et al.
5,299,773	A	4/1994	Bertrand et al.
5,304,999	A	4/1994	Roberts et al.
5,311,596	A	5/1994	Scott et al.
5,327,149	A	7/1994	Kuffer et al.
5,329,285	A	7/1994	McCandless et al.
5,341,088	A	8/1994	Davis
5,345,522	A	9/1994	Vali et al.
5,347,287	A	9/1994	Speciale et al.
5,352,984	A	10/1994	Piesinger et al.
5,353,036	A	10/1994	Baldry
5,359,338	A	10/1994	Hatcher et al.
5,371,623	A	12/1994	Eastmond et al.
5,379,455	A	1/1995	Koschek et al.
5,380,224	A	1/1995	DiCicco
5,381,160	A	1/1995	Landmeier
5,389,442	A	2/1995	Kathiresan et al.

(56) **References Cited**

U.S. PATENT DOCUMENTS

5,400,040 A 3/1995 Lane et al.
5,402,140 A 3/1995 Rodeffer et al.
5,402,151 A 3/1995 Duwaer
5,404,146 A 4/1995 Rutledge et al.
5,410,318 A 4/1995 Wong et al.
5,412,654 A 5/1995 Perkins
5,428,364 A 6/1995 Lee et al.
5,428,818 A 6/1995 Meidan et al.
5,434,575 A 7/1995 Jelinek et al.
5,440,660 A 8/1995 Dombrowski et al.
5,451,969 A 9/1995 Toth et al.
5,457,469 A 10/1995 Diamond et al.
5,473,336 A 12/1995 Harman et al.
5,479,176 A 12/1995 Zavrel et al.
5,481,268 A 1/1996 Higgins
5,482,525 A 1/1996 Kajioka et al.
5,486,839 A 1/1996 Rodeffer et al.
5,488,380 A 1/1996 Harvey et al.
5,495,546 A 2/1996 Bottoms et al.
5,499,308 A 3/1996 Arai et al.
5,499,311 A 3/1996 DeCusatis et al.
5,502,392 A 3/1996 Arjavalingam et al.
5,512,906 A 4/1996 Speciale et al.
5,513,176 A 4/1996 Dean et al.
5,514,965 A 5/1996 Westwood et al.
5,515,059 A 5/1996 How et al.
5,519,408 A 5/1996 Schnetzer et al.
5,528,208 A 6/1996 Kobayashi et al.
5,539,421 A 7/1996 Hong et al.
5,543,000 A 8/1996 Lique
5,557,283 A 9/1996 Sheen
5,559,359 A 9/1996 Reyes
5,566,022 A 10/1996 Segev
5,566,196 A 10/1996 Scifres
5,576,721 A 11/1996 Hwang et al.
5,586,054 A 12/1996 Jensen et al.
5,592,183 A 1/1997 Henf
5,600,630 A 2/1997 Takahashi et al.
5,603,089 A 2/1997 Searle et al.
5,619,015 A 4/1997 Kirma
5,621,421 A 4/1997 Kolz et al.
5,627,879 A 5/1997 Russell et al.
5,628,050 A 5/1997 McGraw et al.
5,630,223 A 5/1997 Bahu et al.
5,637,521 A 6/1997 Rhodes et al.
5,640,168 A 6/1997 Heger et al.
5,646,936 A 7/1997 Shah et al.
5,650,788 A 7/1997 Jha
5,652,554 A 7/1997 Krieg et al.
5,663,693 A 9/1997 Doughty et al.
5,671,304 A 9/1997 Duguay
5,677,699 A 10/1997 Strickland
5,677,909 A 10/1997 Heide
5,680,139 A 10/1997 Huguenin et al.
5,682,256 A 10/1997 Motley et al.
5,684,495 A 11/1997 Dyott et al.
5,686,930 A 11/1997 Brydon
5,724,168 A 3/1998 Oschmann et al.
5,726,980 A 3/1998 Rickard et al.
5,748,153 A 5/1998 McKinzie et al.
5,750,941 A 5/1998 Ishikawa et al.
5,757,323 A 5/1998 Spencer et al.
5,767,807 A 6/1998 Pritchett et al.
5,768,689 A 6/1998 Borg
5,769,879 A 6/1998 Levay et al.
5,784,033 A 7/1998 Boldissar, Jr. et al.
5,784,034 A 7/1998 Konishi et al.
5,784,683 A 7/1998 Sistanizadeh et al.
5,787,673 A 8/1998 Noble
5,793,334 A 8/1998 Harrison et al.
5,800,494 A 9/1998 Campbell et al.
5,805,983 A 9/1998 Naidu et al.
5,809,395 A 9/1998 Hamilton-Piercy et al.
5,812,524 A 9/1998 Moran et al.
5,818,390 A 10/1998 Hill
5,818,396 A 10/1998 Harrison et al.
5,818,512 A 10/1998 Fuller
5,845,391 A 12/1998 Miklosko et al.
5,848,054 A 12/1998 Mosebrook et al.
5,850,199 A 12/1998 Wan et al.
5,854,608 A 12/1998 Leisten
5,859,618 A 1/1999 Miller, II et al.
5,861,843 A 1/1999 Sorace et al.
5,867,763 A 2/1999 Dean et al.
5,870,060 A 2/1999 Chen et al.
5,872,544 A 2/1999 Schay et al.
5,872,547 A 2/1999 Martek
5,872,812 A 2/1999 Saito et al.
5,873,324 A 2/1999 Kaddas et al.
5,886,666 A 3/1999 Schellenberg et al.
5,889,449 A 3/1999 Fiedziuszko
5,890,055 A 3/1999 Chu et al.
5,892,480 A 4/1999 Killen et al.
5,898,133 A 4/1999 Bleich et al.
5,898,830 A 4/1999 Wesinger, Jr. et al.
5,900,847 A 5/1999 Ishikawa et al.
5,903,373 A 5/1999 Welch et al.
5,905,438 A 5/1999 Weiss et al.
5,905,949 A 5/1999 Hawkes et al.
5,910,790 A 6/1999 Ohmuro et al.
5,917,977 A 6/1999 Barrett et al.
5,922,081 A 7/1999 Seewig et al.
5,926,128 A 7/1999 Brash et al.
5,933,422 A 8/1999 Suzuki et al.
5,936,589 A 8/1999 Kawahata
5,948,044 A 9/1999 Varley et al.
5,948,108 A 9/1999 Lu et al.
5,952,964 A 9/1999 Chan et al.
5,952,972 A 9/1999 Ittipiboon et al.
5,952,984 A 9/1999 Kuramoto et al.
5,955,992 A 9/1999 Shattil
5,959,578 A 9/1999 Kreutel et al.
5,959,590 A 9/1999 Sanford et al.
5,973,641 A 10/1999 Smith et al.
5,977,650 A 11/1999 Rickard et al.
5,978,738 A 11/1999 Brown et al.
5,982,276 A 11/1999 Stewart
5,986,331 A 11/1999 Letavic et al.
5,987,099 A 11/1999 O'Neill et al.
5,990,848 A 11/1999 Annamaa et al.
5,994,984 A 11/1999 Stancil et al.
5,994,998 A 11/1999 Fisher et al.
6,005,694 A 12/1999 Liu
6,005,758 A 12/1999 Spencer et al.
6,009,124 A 12/1999 Smith
6,011,520 A 1/2000 Howell et al.
6,011,524 A 1/2000 Jervis et al.
6,014,110 A 1/2000 Bridges et al.
6,018,659 A 1/2000 Ayyagari et al.
6,023,619 A 2/2000 Kaminsky
6,026,173 A 2/2000 Svenson et al.
6,026,208 A 2/2000 Will et al.
6,026,331 A 2/2000 Feldberg et al.
6,031,455 A 2/2000 Grube et al.
6,034,638 A 3/2000 Thiel et al.
6,037,894 A 3/2000 Pfizenmaier et al.
6,038,425 A 3/2000 Jeffrey et al.
6,049,647 A 4/2000 Register et al.
6,057,802 A 5/2000 Nealy
6,061,035 A 5/2000 Kinasewitz et al.
6,063,234 A 5/2000 Chen et al.
6,075,451 A 6/2000 Lebowitz et al.
6,075,493 A 6/2000 Sugawara et al.
6,076,044 A 6/2000 Brown et al.
6,078,297 A 6/2000 Kormanyos et al.
6,088,001 A 7/2000 Burger et al.
6,095,820 A 8/2000 Luxon et al.
6,100,846 A 8/2000 Li et al.
6,103,031 A 8/2000 Aeschbacher et al.
6,107,897 A 8/2000 Hewett et al.
6,111,553 A 8/2000 Steenbuck et al.
6,114,998 A 9/2000 Schefte et al.
6,121,885 A 9/2000 Masone et al.
6,122,753 A 9/2000 Masuo et al.

(56) **References Cited**

U.S. PATENT DOCUMENTS

6,140,911	A	10/2000	Fisher et al.
6,140,976	A	10/2000	Locke et al.
6,142,434	A	11/2000	Brinkman et al.
6,146,330	A	11/2000	Tujino et al.
6,150,612	A	11/2000	Grandy et al.
6,151,145	A	11/2000	Srivastava et al.
6,154,488	A	11/2000	Hunt
6,158,383	A	12/2000	Watanabe et al.
6,163,296	A	12/2000	Lier et al.
6,166,694	A	12/2000	Ying et al.
6,167,055	A	12/2000	Ganek et al.
6,175,917	B1	1/2001	Arrow et al.
6,177,801	B1	1/2001	Chong et al.
6,184,828	B1	2/2001	Shoki et al.
6,195,058	B1	2/2001	Nakamura et al.
6,195,395	B1	2/2001	Frodsham et al.
6,198,440	B1	3/2001	Krylov et al.
6,208,161	B1	3/2001	Suda et al.
6,208,308	B1	3/2001	Lemons et al.
6,208,903	B1	3/2001	Richards et al.
6,211,836	B1	4/2001	Manasson et al.
6,211,837	B1	4/2001	Crouch et al.
6,215,443	B1	4/2001	Komatsu et al.
6,219,006	B1	4/2001	Rudish et al.
6,222,503	B1	4/2001	Gietema et al.
6,225,960	B1	5/2001	Collins et al.
6,229,327	B1	5/2001	Boll et al.
6,236,365	B1	5/2001	Karr et al.
6,239,377	B1	5/2001	Nishikawa et al.
6,239,379	B1	5/2001	Cotter et al.
6,239,761	B1	5/2001	Guo et al.
6,241,045	B1	6/2001	Reeve et al.
6,243,049	B1	6/2001	Chandler et al.
6,246,821	B1	6/2001	Hemken et al.
6,252,553	B1	6/2001	Solomon et al.
6,259,337	B1	7/2001	Wen et al.
6,266,016	B1	7/2001	Bergstedt et al.
6,266,025	B1	7/2001	Popa et al.
6,268,835	B1	7/2001	Toland et al.
6,271,790	B2	8/2001	Smith et al.
6,271,799	B1	8/2001	Rief et al.
6,271,952	B1	8/2001	Epworth et al.
6,278,357	B1	8/2001	Croushore et al.
6,278,370	B1	8/2001	Underwood et al.
6,281,769	B1	8/2001	Fiedziuszko et al.
6,281,855	B1	8/2001	Aoki et al.
6,282,354	B1	8/2001	Jones et al.
6,283,425	B1	9/2001	Liljevik
6,285,325	B1	9/2001	Nalbandian et al.
6,292,139	B1	9/2001	Yamamoto et al.
6,292,143	B1	9/2001	Romanofsky et al.
6,292,153	B1	9/2001	Aiello et al.
6,300,898	B1	10/2001	Schneider et al.
6,300,906	B1	10/2001	Rawnick et al.
6,301,420	B1	10/2001	Greenaway et al.
6,308,085	B1	10/2001	Shoki et al.
6,311,288	B1	10/2001	Heeren et al.
6,317,028	B1	11/2001	Valiulis et al.
6,317,092	B1	11/2001	de Schweinitz et al.
6,320,509	B1	11/2001	Brady et al.
6,320,553	B1	11/2001	Ergene et al.
6,323,819	B1	11/2001	Ergene et al.
6,329,959	B1	12/2001	Varadan et al.
6,335,993	B1	1/2002	Takahashi et al.
6,348,683	B1	2/2002	Verghese et al.
6,351,247	B1	2/2002	Linstrom et al.
6,357,709	B1	3/2002	Parduhn et al.
6,362,788	B1	3/2002	Louzir
6,362,789	B1	3/2002	Trumbull et al.
6,366,238	B1	4/2002	DeMore et al.
6,373,436	B1	4/2002	Chen et al.
6,373,441	B1	4/2002	Porath et al.
6,376,824	B1	4/2002	Michenfelder et al.
6,380,822	B1	4/2002	Lindgren et al.
6,388,564	B1	5/2002	Piercy et al.
6,396,440	B1	5/2002	Chen et al.
6,404,773	B1	6/2002	Williams et al.
6,404,775	B1	6/2002	Leslie
6,421,021	B1	7/2002	Rupp et al.
6,433,736	B1	8/2002	Timothy et al.
6,433,741	B2	8/2002	Tanizaki et al.
6,436,536	B2	8/2002	Peruzzotti et al.
6,441,723	B1	8/2002	Mansfield, Jr. et al.
6,445,351	B1	9/2002	Baker et al.
6,445,774	B1	9/2002	Kidder et al.
6,452,467	B1	9/2002	McEwan
6,452,569	B1	9/2002	Park et al.
6,452,923	B1	9/2002	Gerszberg et al.
6,455,769	B1	9/2002	Belli et al.
6,456,251	B1	9/2002	Rao et al.
6,462,700	B1	10/2002	Schmidt et al.
6,463,295	B1	10/2002	Yun et al.
6,469,676	B1	10/2002	Fehrenbach et al.
6,473,049	B2	10/2002	Takeuchi et al.
6,480,168	B1	11/2002	Lam et al.
6,483,470	B1	11/2002	Hohnstein et al.
6,489,928	B2	12/2002	Sakurada
6,489,931	B2	12/2002	Liu et al.
6,492,957	B2	12/2002	Carillo, Jr. et al.
6,501,433	B2	12/2002	Popa et al.
6,507,573	B1	1/2003	Brandt et al.
6,510,152	B1	1/2003	Gerszberg et al.
6,515,635	B2	2/2003	Chiang et al.
6,522,305	B2	2/2003	Sharman et al.
6,531,991	B2	3/2003	Adachi et al.
6,532,215	B1	3/2003	Muntz et al.
6,534,996	B1	3/2003	Amrany et al.
6,535,169	B2	3/2003	Fourdeux et al.
6,542,739	B1	4/2003	Garner
6,549,106	B2	4/2003	Martin et al.
6,549,173	B1	4/2003	King et al.
6,552,693	B1	4/2003	Leisten et al.
6,559,811	B1	5/2003	Cash et al.
6,563,981	B2	5/2003	Weisberg et al.
6,567,573	B1	5/2003	Domash et al.
6,573,803	B1	6/2003	Ziegner et al.
6,573,813	B1	6/2003	Joannopoulos et al.
6,580,295	B2	6/2003	Takekuma et al.
6,584,084	B1	6/2003	Barany et al.
6,584,252	B1	6/2003	Schier et al.
6,587,077	B2	7/2003	Vail et al.
6,593,893	B2	7/2003	Hou et al.
6,594,238	B1	7/2003	Wallentin et al.
6,596,944	B1	7/2003	Clark et al.
6,600,456	B2	7/2003	Gothard et al.
6,606,057	B2	8/2003	Chiang et al.
6,606,066	B1	8/2003	Fawcett et al.
6,606,077	B2	8/2003	Ebling et al.
6,611,252	B1	8/2003	DuFaux et al.
6,614,237	B2	9/2003	Ademian et al.
6,631,229	B1	10/2003	Norris et al.
6,634,225	B1	10/2003	Reime et al.
6,639,484	B2	10/2003	Tzuang et al.
6,639,566	B2	10/2003	Knop et al.
6,642,887	B2	11/2003	Owechko et al.
6,643,254	B1	11/2003	Abe et al.
6,650,296	B2	11/2003	Wong et al.
6,653,598	B2	11/2003	Sullivan et al.
6,653,848	B2	11/2003	Adamian et al.
6,657,437	B1	12/2003	LeCroy et al.
6,659,655	B2	12/2003	Dair et al.
6,661,391	B2	12/2003	Ohara et al.
6,668,104	B1	12/2003	Mueller-Fiedler et al.
6,670,921	B2	12/2003	Sievenpiper et al.
6,671,824	B1	12/2003	Hyland et al.
6,677,899	B1	1/2004	Lee et al.
6,680,903	B1	1/2004	Moriguchi et al.
6,683,580	B2	1/2004	Kuramoto
6,686,832	B2	2/2004	Abraham et al.
6,686,873	B2	2/2004	Patel et al.
6,686,875	B1	2/2004	Wolfson et al.
6,697,027	B2	2/2004	Mahon et al.
6,697,030	B2	2/2004	Gleener
6,703,981	B2	3/2004	Meitzler et al.

(56) **References Cited**

U.S. PATENT DOCUMENTS

6,714,165 B2 3/2004 Verstraeten
6,720,935 B2 4/2004 Lamensdorf et al.
6,725,035 B2 4/2004 Jochim et al.
6,727,470 B2 4/2004 Reichle et al.
6,727,891 B2 4/2004 Moriya et al.
6,728,439 B2 4/2004 Weisberg et al.
6,728,552 B2 4/2004 Chatain et al.
6,731,210 B2 5/2004 Swanson et al.
6,731,649 B1 5/2004 Silverman
6,737,934 B2 5/2004 Yamada
6,741,705 B1 5/2004 Nelson et al.
6,747,557 B1 6/2004 Petite et al.
6,750,827 B2 6/2004 Manasson et al.
6,751,441 B1 6/2004 Murray
6,753,813 B2 6/2004 Kushihi et al.
6,754,470 B2 6/2004 Hendrickson et al.
6,755,312 B2 6/2004 Dziedzic et al.
6,756,538 B1 6/2004 Murga-Gonzalez et al.
6,763,195 B1 7/2004 Willebrand et al.
6,765,479 B2 7/2004 Stewart et al.
6,768,454 B2 7/2004 Kingsley et al.
6,768,456 B1 7/2004 Lalezari et al.
6,768,471 B2 7/2004 Bostwick et al.
6,768,474 B2 7/2004 Hunt et al.
6,771,216 B2 8/2004 Patel et al.
6,771,225 B2 8/2004 Tits et al.
6,771,739 B1 8/2004 Beamon et al.
6,774,859 B2 8/2004 Schantz et al.
6,778,729 B1 8/2004 Guy et al.
6,788,865 B2 9/2004 Kawanishi et al.
6,788,951 B2 9/2004 Aoki et al.
6,789,119 B1 9/2004 Zhu et al.
6,792,290 B2 9/2004 Proctor, Jr. et al.
6,798,223 B2 9/2004 Huang et al.
6,806,710 B1 10/2004 Renz et al.
6,809,633 B2 10/2004 Cern et al.
6,809,695 B2 10/2004 Le Bayon et al.
6,812,895 B2 11/2004 Anderson et al.
6,819,744 B1 11/2004 Galli et al.
6,822,615 B2 11/2004 Quan et al.
6,839,032 B2 1/2005 Teshirogi et al.
6,839,160 B2 1/2005 Tsuda et al.
6,839,846 B2 1/2005 Mangold et al.
6,842,157 B2 1/2005 Phelan et al.
6,842,430 B1 1/2005 Melnik et al.
6,850,128 B2 2/2005 Park
6,853,351 B1 2/2005 Mohuchy et al.
6,856,273 B1 2/2005 Bognar et al.
6,859,185 B2 2/2005 Royalty et al.
6,859,187 B2 2/2005 Ohlsson et al.
6,859,590 B1 2/2005 Zaccone
6,861,998 B2 3/2005 Louzir
6,864,851 B2 3/2005 McGrath et al.
6,864,853 B2 3/2005 Judd et al.
6,867,744 B2 3/2005 Toncich et al.
6,868,258 B2 3/2005 Hayata et al.
6,870,465 B1 3/2005 Song et al.
6,873,265 B2 3/2005 Bleier et al.
6,885,674 B2 4/2005 Hunt et al.
6,886,065 B2 4/2005 Sides et al.
6,888,623 B2 5/2005 Clements
6,901,064 B2 5/2005 Billhartz et al.
6,904,218 B2 6/2005 Sun et al.
6,906,676 B2 6/2005 Killen et al.
6,906,681 B2 6/2005 Hoppenstein et al.
6,909,893 B2 6/2005 Aoki et al.
6,917,974 B1 7/2005 Stytz et al.
6,920,289 B2 7/2005 Zimmerman et al.
6,920,315 B1 7/2005 Wilcox et al.
6,920,407 B2 7/2005 Phillips et al.
6,922,135 B2 7/2005 Abraham et al.
6,924,732 B2 8/2005 Yokoo et al.
6,924,776 B2 8/2005 Le et al.
6,928,194 B2 8/2005 Mai et al.
6,933,887 B2 8/2005 Regnier et al.
6,934,655 B2 8/2005 Jones et al.
6,937,595 B2 8/2005 Barzegar et al.
6,943,553 B2 9/2005 Zimmermann et al.
6,944,555 B2 9/2005 Blackett et al.
6,947,147 B2 9/2005 Motamedi et al.
6,947,376 B1 9/2005 Deng et al.
6,947,635 B2 9/2005 Kohns et al.
6,948,371 B2 9/2005 Tanaka et al.
6,950,567 B2 9/2005 Kline et al.
6,952,143 B2 10/2005 Kinayman et al.
6,952,183 B2 10/2005 Yuanzhu et al.
6,956,506 B2 10/2005 Koivumaeki et al.
6,958,729 B1 10/2005 Metz et al.
6,965,302 B2 11/2005 Mollenkopf et al.
6,965,355 B1 11/2005 Durham et al.
6,965,784 B2 11/2005 Kanamaluru et al.
6,967,627 B2 11/2005 Roper et al.
6,970,502 B2 11/2005 Kim et al.
6,970,682 B2 11/2005 Crilly, Jr. et al.
6,972,729 B2 12/2005 Wang et al.
6,980,091 B2 12/2005 White, II et al.
6,982,611 B2 1/2006 Cope et al.
6,982,679 B2 1/2006 Kralovec et al.
6,983,174 B2 1/2006 Hoppenstein et al.
6,985,118 B2 1/2006 Killen et al.
6,992,639 B1 1/2006 Lier et al.
6,999,667 B2 2/2006 Jang et al.
7,008,120 B2 3/2006 Zaborsky et al.
7,009,471 B2 3/2006 Elmore
7,012,489 B2 3/2006 Fisher et al.
7,012,572 B1 3/2006 Schaffner et al.
7,016,585 B2 3/2006 Diggle, III et al.
7,019,704 B2 3/2006 Weiss et al.
7,023,400 B2 4/2006 Hill et al.
7,026,917 B2 4/2006 Berkman et al.
7,027,003 B2 4/2006 Sasaki et al.
7,027,454 B2 4/2006 Dent et al.
7,032,016 B2 4/2006 Cerami et al.
7,038,636 B2 5/2006 Larouche et al.
7,039,048 B1 5/2006 Monta et al.
7,042,403 B2 5/2006 Sievenpiper et al.
7,042,416 B2 5/2006 Kingsley et al.
7,042,420 B2 5/2006 Ebling et al.
7,054,286 B2 5/2006 Ertel et al.
7,054,376 B1 5/2006 Rubinstain et al.
7,054,513 B2 5/2006 Herz et al.
7,055,148 B2 5/2006 Marsh et al.
7,057,558 B2 6/2006 Yasuho et al.
7,057,573 B2 6/2006 Ohira et al.
7,058,524 B2 6/2006 Hayes et al.
7,061,370 B2 6/2006 Cern et al.
7,061,891 B1 6/2006 Kilfoyle et al.
7,064,726 B2 6/2006 Kitamori et al.
7,068,998 B2 6/2006 Zavidniak et al.
7,069,163 B2 6/2006 Gunther et al.
7,075,414 B2 7/2006 Giannini et al.
7,075,485 B2 7/2006 Song et al.
7,075,496 B2 7/2006 Hidai et al.
7,082,321 B2 7/2006 Kuwahara et al.
7,084,742 B2 8/2006 Haines et al.
7,088,221 B2 8/2006 Chan
7,088,306 B2 8/2006 Chiang et al.
7,098,405 B2 8/2006 Glew et al.
7,098,773 B2 8/2006 Berkman et al.
7,102,581 B1 9/2006 West et al.
7,106,265 B2 9/2006 Robertson et al.
7,106,270 B2 9/2006 Iigusa et al.
7,106,273 B1 9/2006 Brunson et al.
7,109,939 B2 9/2006 Lynch et al.
7,110,678 B2 9/2006 Willebrand et al.
7,113,002 B2 9/2006 Otsuka et al.
7,113,134 B1 9/2006 Berkman et al.
7,119,755 B2 10/2006 Harvey et al.
7,120,338 B2 10/2006 Gunn, III et al.
7,120,345 B2 10/2006 Naitou et al.
7,122,012 B2 10/2006 Bouton et al.
7,123,191 B2 10/2006 Goldberg et al.
7,123,801 B2 10/2006 Fitz et al.
7,125,512 B2 10/2006 Crump et al.

(56) **References Cited**

U.S. PATENT DOCUMENTS

7,126,557	B2	10/2006	Warnagiris et al.
7,126,711	B2	10/2006	Fruth
7,127,348	B2	10/2006	Smitherman et al.
7,130,516	B2	10/2006	Wu et al.
7,132,950	B2	11/2006	Stewart et al.
7,133,930	B2	11/2006	Sabio et al.
7,134,012	B2	11/2006	Doyle et al.
7,134,135	B2	11/2006	Cerami et al.
7,136,397	B2	11/2006	Sharma et al.
7,136,772	B2	11/2006	Duchi et al.
7,137,605	B1	11/2006	Guertler et al.
7,138,767	B2	11/2006	Chen et al.
7,138,958	B2	11/2006	Syed et al.
7,139,328	B2	11/2006	Thomas et al.
7,145,440	B2	12/2006	Gerszberg et al.
7,145,552	B2	12/2006	Hollingsworth et al.
7,151,497	B2	12/2006	Crystal et al.
7,151,508	B2	12/2006	Schaffner et al.
7,155,238	B2	12/2006	Katz et al.
7,161,934	B2	1/2007	Buchsbaum et al.
7,164,354	B1	1/2007	Panzer et al.
7,167,139	B2	1/2007	Kim et al.
7,171,087	B2	1/2007	Takahashi et al.
7,171,308	B2	1/2007	Campbell et al.
7,171,493	B2	1/2007	Shu et al.
7,176,589	B2	2/2007	Rouquette et al.
7,180,459	B2	2/2007	Damini et al.
7,180,467	B2	2/2007	Fabrega-Sanchez
7,183,922	B2	2/2007	Mendolia et al.
7,183,991	B2	2/2007	Bhattacharyya et al.
7,183,998	B2	2/2007	Wilhelm et al.
7,193,562	B2	3/2007	Kish et al.
7,194,528	B1	3/2007	Davidow et al.
7,199,680	B2	4/2007	Fukunaga et al.
7,200,391	B2	4/2007	Chung et al.
7,200,658	B2	4/2007	Goeller et al.
7,205,950	B2	4/2007	Imai et al.
7,212,163	B2	5/2007	Huang et al.
7,215,220	B1	5/2007	Jia et al.
7,215,928	B2	5/2007	Gage et al.
7,218,285	B2	5/2007	Davis et al.
7,224,170	B2	5/2007	Graham et al.
7,224,243	B2	5/2007	Cope et al.
7,224,272	B2	5/2007	White, II et al.
7,224,320	B2	5/2007	Cook et al.
7,224,985	B2	5/2007	Caci et al.
7,228,123	B2	6/2007	Moursund et al.
7,234,413	B2	6/2007	Suzuki et al.
7,234,895	B2	6/2007	Richardson et al.
7,239,284	B1	7/2007	Staal et al.
7,243,610	B2	7/2007	Ishii et al.
7,248,148	B2	7/2007	Kline et al.
7,250,772	B2	7/2007	Furse et al.
7,255,821	B2	8/2007	Priedeman, Jr. et al.
7,259,657	B2	8/2007	Mollenkopf et al.
7,260,424	B2	8/2007	Schmidt et al.
7,266,154	B2	9/2007	Gundrum et al.
7,266,275	B2	9/2007	Hansen et al.
7,268,722	B2	9/2007	Gottwald et al.
7,272,281	B2	9/2007	Stahulak et al.
7,272,362	B2	9/2007	Jeong et al.
7,274,305	B1	9/2007	Luttrell
7,274,936	B2	9/2007	Stern-Berkowitz et al.
7,276,990	B2	10/2007	Sievenpiper et al.
7,280,033	B2	10/2007	Berkman et al.
7,280,803	B2	10/2007	Nelson et al.
7,282,922	B2	10/2007	Lo et al.
7,286,099	B1	10/2007	Lier et al.
7,289,449	B1	10/2007	Rubinstein et al.
7,289,704	B1	10/2007	Wagman et al.
7,289,828	B2	10/2007	Cha et al.
7,292,125	B2	11/2007	Mansour et al.
7,292,196	B2	11/2007	Waterhouse et al.
7,295,161	B2	11/2007	Gaucher et al.
7,297,869	B2	11/2007	Hiller et al.
7,301,440	B2	11/2007	Mollenkopf
7,301,508	B1	11/2007	O'Loughlin et al.
7,307,357	B2	12/2007	Kopp et al.
7,307,596	B1	12/2007	West et al.
7,308,264	B2	12/2007	Stern-Berkowitz et al.
7,308,370	B2	12/2007	Mason, Jr. et al.
7,309,873	B2	12/2007	Ishikawa
7,310,065	B2	12/2007	Anguera Pros et al.
7,310,335	B1	12/2007	Garcia-Luna-Aceves et al.
7,311,605	B2	12/2007	Moser
7,312,686	B2	12/2007	Bruno
7,313,087	B2	12/2007	Patil et al.
7,313,312	B2	12/2007	Kimball et al.
7,315,224	B2	1/2008	Gurovich et al.
7,315,678	B2	1/2008	Siegel
7,318,564	B1	1/2008	Marshall et al.
7,319,717	B2	1/2008	Zitting et al.
7,321,291	B2	1/2008	Gidge et al.
7,321,707	B2	1/2008	Noda et al.
7,324,046	B1	1/2008	Wu et al.
7,324,817	B2	1/2008	Iacono et al.
7,329,815	B2	2/2008	Johnston et al.
7,333,064	B1	2/2008	Timothy et al.
7,333,593	B2	2/2008	Beamon et al.
7,339,466	B2	3/2008	Mansfield et al.
7,339,897	B2	3/2008	Larsson et al.
7,340,768	B2	3/2008	Rosenberger et al.
7,345,623	B2	3/2008	McEwan et al.
7,346,244	B2	3/2008	Gowan et al.
7,346,359	B2	3/2008	Damarla et al.
7,353,293	B2	4/2008	Hipfinger et al.
7,355,560	B2	4/2008	Nagai et al.
7,358,808	B2	4/2008	Berkman et al.
7,358,921	B2	4/2008	Snyder et al.
7,369,085	B1	5/2008	Jacomb-Hood et al.
7,369,095	B2	5/2008	Thudor et al.
7,376,191	B2	5/2008	Melick et al.
7,380,272	B2	5/2008	Sharp et al.
7,381,089	B2	6/2008	Hosler, Sr.
7,382,232	B2	6/2008	Gidge et al.
7,383,577	B2	6/2008	Hrastar et al.
7,388,450	B2	6/2008	Camiade et al.
7,397,422	B2	7/2008	Tekawy et al.
7,398,946	B1	7/2008	Marshall
7,400,304	B2	7/2008	Lewis et al.
7,403,169	B2	7/2008	Svensson et al.
7,406,337	B2	7/2008	Kim et al.
7,408,426	B2	8/2008	Broyde et al.
7,408,507	B1	8/2008	Paek et al.
7,408,923	B1	8/2008	Khan et al.
7,410,606	B2	8/2008	Atkinson et al.
7,417,587	B2	8/2008	Iskander et al.
7,418,178	B2	8/2008	Kudou et al.
7,418,273	B2	8/2008	Suyama et al.
7,420,474	B1	9/2008	Elks et al.
7,420,525	B2	9/2008	Colburn et al.
7,423,604	B2	9/2008	Nagai et al.
7,426,554	B2	9/2008	Kennedy et al.
7,427,927	B2	9/2008	Borleske et al.
7,430,257	B1	9/2008	Shattil et al.
7,430,932	B2	10/2008	Mekhanoshin et al.
7,443,334	B2	10/2008	Rees et al.
7,444,404	B2	10/2008	Wetherall et al.
7,446,567	B2	11/2008	Otsuka et al.
7,450,000	B2	11/2008	Gidge et al.
7,450,001	B2	11/2008	Berkman
7,453,352	B2	11/2008	Kline et al.
7,453,393	B2	11/2008	Duivenvoorden et al.
7,456,650	B2	11/2008	Lee et al.
7,459,834	B2	12/2008	Knowles et al.
7,460,834	B2	12/2008	Johnson et al.
7,463,877	B2	12/2008	Iwamura
7,465,879	B2	12/2008	Glew et al.
7,466,225	B2	12/2008	White, II et al.
7,468,657	B2	12/2008	Yaney
7,477,285	B1	1/2009	Johnson et al.
7,479,776	B2	1/2009	Renken et al.
7,479,841	B2	1/2009	Stenger et al.
7,486,247	B2	2/2009	Ridgway et al.

(56) **References Cited**

U.S. PATENT DOCUMENTS

7,490,275	B2	2/2009	Zerbe et al.
7,492,317	B2	2/2009	Tinsley et al.
7,496,674	B2	2/2009	Jorgensen et al.
7,498,822	B2	3/2009	Lee et al.
7,502,619	B1	3/2009	Katz et al.
7,504,938	B2	3/2009	Eiza et al.
7,508,834	B2	3/2009	Berkman et al.
7,509,009	B2	3/2009	Suzuki et al.
7,509,675	B2	3/2009	Aaron et al.
7,511,662	B2	3/2009	Mathews et al.
7,512,090	B2	3/2009	Benitez Pelaez et al.
7,515,041	B2	4/2009	Eisold et al.
7,516,487	B1	4/2009	Szeto et al.
7,518,529	B2	4/2009	O'Sullivan et al.
7,518,952	B1	4/2009	Padden et al.
7,519,323	B2	4/2009	Mohebbi et al.
7,522,115	B2	4/2009	Waltman et al.
7,522,812	B2	4/2009	Zitting
7,525,501	B2	4/2009	Black et al.
7,525,504	B1	4/2009	Song et al.
7,531,803	B2	5/2009	Mittleman et al.
7,532,792	B2	5/2009	Skovgaard et al.
7,535,867	B1	5/2009	Kilfoyle et al.
7,539,381	B2	5/2009	Li et al.
7,541,981	B2	6/2009	Piskun et al.
7,545,818	B2	6/2009	Chen et al.
7,546,214	B2	6/2009	Rivers, Jr. et al.
7,548,212	B2	6/2009	Chekroun et al.
7,551,921	B2	6/2009	Petermann et al.
7,554,998	B2	6/2009	Simonsson et al.
7,555,182	B2	6/2009	Martin et al.
7,555,186	B2	6/2009	De Montmorillon et al.
7,555,187	B2	6/2009	Bickham et al.
7,557,563	B2	7/2009	Cowan et al.
7,561,025	B2	7/2009	Gerszberg et al.
7,567,154	B2	7/2009	Elmore
7,567,740	B2	7/2009	Bayindir et al.
7,570,137	B2	8/2009	Kintis et al.
7,570,470	B2	8/2009	Holley
7,577,398	B2	8/2009	Tennant et al.
7,580,643	B2	8/2009	Moore et al.
7,581,702	B2	9/2009	Wheeler et al.
7,583,074	B1	9/2009	Lynch et al.
7,583,233	B2	9/2009	Goldberg et al.
7,584,470	B2	9/2009	Barker et al.
7,589,630	B2	9/2009	Drake et al.
7,589,686	B2	9/2009	Balzovsky et al.
7,590,404	B1	9/2009	Johnson
7,591,020	B2	9/2009	Kammer et al.
7,591,792	B2	9/2009	Bouton et al.
7,593,067	B2	9/2009	Taguchi et al.
7,596,222	B2	9/2009	Jonas et al.
7,598,844	B2	10/2009	Corcoran et al.
7,602,333	B2	10/2009	Hiramatsu et al.
7,602,815	B2	10/2009	Houghton et al.
7,605,768	B2	10/2009	Ebling et al.
7,620,370	B2	11/2009	Barak et al.
7,625,131	B2	12/2009	Zienkewicz et al.
7,626,489	B2	12/2009	Berkman et al.
7,626,542	B2	12/2009	Kober et al.
7,627,300	B2	12/2009	Abramov et al.
7,633,442	B2	12/2009	Lynch et al.
7,634,250	B1	12/2009	Prasad et al.
7,639,201	B2	12/2009	Marklein et al.
7,640,562	B2	12/2009	Bouilloux-Lafont et al.
7,640,581	B1	12/2009	Brenton et al.
7,653,363	B2	1/2010	Karr et al.
RE41,147	E	2/2010	Pang et al.
7,656,167	B1	2/2010	McLean et al.
7,656,358	B2	2/2010	Haziza et al.
7,660,244	B2	2/2010	Kadaba et al.
7,660,252	B1	2/2010	Huang et al.
7,660,328	B1	2/2010	Oz et al.
7,664,117	B2	2/2010	Lou et al.
7,669,049	B2	2/2010	Wang et al.
7,671,701	B2	3/2010	Radtke
7,671,820	B2	3/2010	Tokoro et al.
7,672,271	B2	3/2010	Lee et al.
7,676,679	B2	3/2010	Weis et al.
7,680,478	B2	3/2010	Willars et al.
7,680,516	B2	3/2010	Lovberg et al.
7,680,561	B2	3/2010	Rodgers et al.
7,683,848	B2	3/2010	Musch et al.
7,684,383	B1	3/2010	Thompson et al.
7,693,079	B2	4/2010	Cerami et al.
7,693,162	B2	4/2010	McKenna et al.
7,693,939	B2	4/2010	Wu et al.
7,697,417	B2	4/2010	Chen et al.
7,701,931	B2	4/2010	Kajiwara
7,705,747	B2	4/2010	Twitchell, Jr.
7,710,346	B2	5/2010	Bloss et al.
7,714,536	B1	5/2010	Silberg et al.
7,714,709	B1	5/2010	Daniel et al.
7,714,725	B2	5/2010	Medve et al.
7,715,672	B2	5/2010	Dong et al.
7,716,660	B2	5/2010	Mackay et al.
7,724,782	B2	5/2010	Wang et al.
7,728,772	B2	6/2010	Mortazawi et al.
7,729,285	B2	6/2010	Yoon et al.
7,733,094	B2	6/2010	Bright et al.
7,734,717	B2	6/2010	Saarimäki et al.
7,737,903	B1	6/2010	Rao et al.
7,739,402	B2	6/2010	Graham et al.
7,743,403	B2	6/2010	McCarty et al.
7,747,356	B2	6/2010	Andarawis et al.
7,747,774	B2	6/2010	Aaron et al.
7,750,244	B1	7/2010	Melding et al.
7,750,763	B2	7/2010	Praβmayer et al.
7,751,054	B2	7/2010	Backes et al.
7,760,978	B2	7/2010	Fishteyn et al.
7,761,079	B2	7/2010	Mollenkopf et al.
7,764,943	B2	7/2010	Radtke et al.
7,773,664	B2	8/2010	Myers et al.
7,782,156	B2	8/2010	Woods et al.
7,783,195	B2	8/2010	Riggsby et al.
7,786,894	B2	8/2010	Polk et al.
7,786,945	B2	8/2010	Baldauf et al.
7,786,946	B2	8/2010	Diaz et al.
7,791,549	B2	9/2010	Clymer et al.
7,792,016	B2	9/2010	Arai et al.
7,795,877	B2	9/2010	Radtke et al.
7,795,994	B2	9/2010	Radtke et al.
7,796,025	B2	9/2010	Berkman et al.
7,796,122	B2	9/2010	Shih et al.
7,796,890	B1	9/2010	Johnson
7,797,367	B1	9/2010	Girod et al.
7,805,029	B2	9/2010	Bayindir et al.
7,808,441	B2	10/2010	Parsche et al.
7,809,223	B2	10/2010	Miyabe et al.
7,812,686	B2	10/2010	Woods et al.
7,812,778	B2	10/2010	Hasegawa et al.
7,813,344	B2	10/2010	Cheswick
7,817,063	B2	10/2010	Hawkins et al.
7,825,793	B1	11/2010	Spillman et al.
7,825,867	B2	11/2010	Tuttle et al.
7,826,602	B1	11/2010	Hunyady et al.
7,827,610	B2	11/2010	Wang et al.
7,830,228	B2	11/2010	Evans et al.
7,834,270	B2	11/2010	Zhu et al.
7,835,128	B2	11/2010	Divan et al.
7,835,600	B1	11/2010	Yap et al.
7,843,375	B1	11/2010	Rennie et al.
7,844,081	B2	11/2010	McMakin et al.
7,848,517	B2	12/2010	Britz et al.
7,852,752	B2	12/2010	Kano
7,852,837	B1	12/2010	Au et al.
7,853,267	B2	12/2010	Jensen et al.
7,855,612	B2	12/2010	Zienkewicz et al.
7,856,007	B2	12/2010	Corcoran et al.
7,869,391	B2	1/2011	Lee et al.
7,872,610	B2	1/2011	Motzer et al.
7,872,611	B2	1/2011	Müller et al.
7,873,249	B2	1/2011	Kachmar et al.
7,876,174	B2	1/2011	Radtke et al.

(56) **References Cited**

U.S. PATENT DOCUMENTS

7,884,285	B2	2/2011	Spencer
7,884,648	B2	2/2011	Broyde et al.
7,885,542	B2	2/2011	Riggsby et al.
7,889,129	B2	2/2011	Fox et al.
7,889,148	B2	2/2011	Diaz et al.
7,889,149	B2	2/2011	Peebles et al.
7,890,053	B2	2/2011	Washiro
7,893,789	B2	2/2011	Paynter et al.
7,894,770	B2	2/2011	Washiro et al.
7,898,480	B2	3/2011	Rebeiz et al.
7,899,403	B2	3/2011	Aaron
7,903,918	B1	3/2011	Bickham et al.
7,903,972	B2	3/2011	Riggsby et al.
7,906,973	B1	3/2011	Orr et al.
7,907,097	B2	3/2011	Syed et al.
7,915,980	B2	3/2011	Hardacker et al.
7,916,081	B2	3/2011	Lakkis et al.
7,928,750	B2	4/2011	Miller et al.
7,929,940	B1	4/2011	Dianda et al.
7,930,750	B1	4/2011	Gauvin et al.
7,937,699	B2	5/2011	Schneider et al.
7,940,207	B1	5/2011	Kienzle et al.
7,940,731	B2	5/2011	Gao et al.
7,956,818	B1	6/2011	Hsu et al.
7,958,120	B2	6/2011	Muntz et al.
7,961,710	B2	6/2011	Lee et al.
7,962,957	B2	6/2011	Keohane et al.
7,965,842	B2	6/2011	Whelan et al.
7,970,365	B2	6/2011	Martin et al.
7,970,937	B2	6/2011	Shuster et al.
7,971,053	B2	6/2011	Gibson et al.
7,973,296	B2	7/2011	Quick et al.
7,974,387	B2	7/2011	Lutz et al.
7,983,740	B2	7/2011	Culver et al.
7,986,711	B2	7/2011	Horvath et al.
7,990,146	B2	8/2011	Lazar et al.
7,990,329	B2	8/2011	Deng et al.
7,991,877	B2	8/2011	Keohane et al.
7,992,014	B2	8/2011	Langgood et al.
7,994,996	B2	8/2011	Rebeiz et al.
7,994,999	B2	8/2011	Maeda et al.
7,997,546	B1	8/2011	Andersen et al.
8,010,116	B2	8/2011	Scheinert
8,013,694	B2	9/2011	Sagala et al.
8,019,288	B2	9/2011	Yu et al.
8,022,885	B2	9/2011	Smoyer et al.
8,022,887	B1	9/2011	Zarnaghi et al.
8,023,410	B2	9/2011	O'Neill et al.
8,027,391	B2	9/2011	Matsubara et al.
8,036,207	B2	10/2011	Chen et al.
8,049,576	B2	11/2011	Broyde et al.
8,054,199	B2	11/2011	Addy et al.
8,059,576	B2	11/2011	Vavik et al.
8,059,593	B2	11/2011	Shih et al.
8,060,308	B2	11/2011	Breed et al.
8,063,832	B1	11/2011	Weller et al.
8,064,744	B2	11/2011	Atkins et al.
8,064,944	B2	11/2011	Yun et al.
8,065,099	B2	11/2011	Gibala et al.
8,069,483	B1	11/2011	Matlock et al.
8,072,323	B2	12/2011	Kodama et al.
8,072,386	B2	12/2011	Lier et al.
8,073,810	B2	12/2011	Maes
8,077,049	B2	12/2011	Yaney et al.
8,077,113	B2	12/2011	Renilson et al.
8,081,854	B2	12/2011	Yoon et al.
8,089,356	B2	1/2012	Moore et al.
8,089,404	B2	1/2012	Nichols et al.
8,089,952	B2	1/2012	Spade et al.
8,090,258	B2	1/2012	DeLew et al.
8,090,379	B2	1/2012	Lambert et al.
8,094,081	B1	1/2012	Boone et al.
8,094,985	B2	1/2012	Imamura et al.
8,095,093	B2	1/2012	Takinami et al.
8,098,198	B2	1/2012	Thiesen et al.
8,102,324	B2	1/2012	Tuau et al.
8,102,779	B2	1/2012	Kim et al.
8,106,749	B2	1/2012	Ina et al.
8,106,849	B2	1/2012	Suddath et al.
RE43,163	E	2/2012	Anderson
8,111,148	B2	2/2012	Parker et al.
8,112,649	B2	2/2012	Potkonjak et al.
8,116,598	B2	2/2012	Shutter et al.
8,120,488	B2	2/2012	Bloy et al.
8,121,624	B2	2/2012	Cai et al.
8,125,282	B2	2/2012	Bao et al.
8,125,399	B2	2/2012	McKinzie et al.
8,126,393	B2	2/2012	Wu et al.
8,129,817	B2	3/2012	Jou et al.
8,131,125	B2	3/2012	Molin et al.
8,131,266	B2	3/2012	Cai et al.
8,132,239	B2	3/2012	Wahl
8,134,424	B2	3/2012	Kato et al.
8,134,458	B2	3/2012	Lund
8,135,050	B1	3/2012	Stadler et al.
8,140,113	B2	3/2012	Rofougaran et al.
8,150,311	B2	4/2012	Hart et al.
8,151,306	B2	4/2012	Rakib
8,156,520	B2	4/2012	Casagrande et al.
8,159,316	B2	4/2012	Miyazato et al.
8,159,342	B1	4/2012	Medina, III et al.
8,159,385	B2	4/2012	Farneth et al.
8,159,394	B2	4/2012	Hayes et al.
8,159,742	B2	4/2012	McKay et al.
8,159,933	B2	4/2012	Henry
8,159,955	B2	4/2012	Larsson et al.
8,160,064	B2	4/2012	Kokernak et al.
8,160,530	B2	4/2012	Corman et al.
8,160,825	B1	4/2012	Roe, Jr. et al.
8,164,531	B2	4/2012	Lier et al.
8,171,146	B2	5/2012	Chen et al.
8,172,173	B2	5/2012	Carlson et al.
8,173,943	B2	5/2012	Vilo et al.
8,175,535	B2	5/2012	Mu et al.
8,175,649	B2	5/2012	Saban
8,179,787	B2	5/2012	Knapp et al.
8,180,917	B1	5/2012	Yan et al.
8,184,015	B2	5/2012	Lilien et al.
8,184,059	B2	5/2012	Bunch et al.
8,184,311	B2	5/2012	Sakai et al.
8,184,523	B2	5/2012	Belotserkovsky et al.
8,185,062	B2	5/2012	Rofougaran et al.
8,188,855	B2	5/2012	Sharma et al.
8,199,762	B2	6/2012	Michelson et al.
8,203,501	B2	6/2012	Kim et al.
8,212,635	B2	7/2012	Miller, II et al.
8,212,722	B2	7/2012	Ngo et al.
8,213,758	B2	7/2012	Dong et al.
8,218,929	B2	7/2012	Bickham et al.
8,222,919	B2	7/2012	Broyde et al.
8,222,977	B2	7/2012	Oyama et al.
8,225,379	B2	7/2012	van et al.
8,233,905	B2	7/2012	Vaswani et al.
8,237,617	B1	8/2012	Johnson et al.
8,238,824	B2	8/2012	Washiro
8,238,840	B2	8/2012	Iio et al.
8,242,358	B2	8/2012	Park et al.
8,243,603	B2	8/2012	Gossain et al.
8,249,028	B2	8/2012	Porras et al.
8,251,307	B2	8/2012	Goossen et al.
8,253,516	B2	8/2012	Miller, II et al.
8,255,952	B2	8/2012	Boylan, III et al.
8,258,743	B2	9/2012	Tyler et al.
8,259,028	B2	9/2012	Hills et al.
8,264,417	B2	9/2012	Snow et al.
8,269,583	B2	9/2012	Miller, II et al.
8,284,102	B2	10/2012	Hayes et al.
8,287,323	B2	10/2012	Kiesow et al.
8,295,301	B2	10/2012	Yonge, III et al.
8,300,538	B2	10/2012	Kim et al.
8,300,640	B2	10/2012	Al-Banna et al.
8,316,228	B2	11/2012	Winslow et al.
8,316,364	B2	11/2012	Stein et al.
8,324,990	B2	12/2012	Vouloumanos

(56) **References Cited**

U.S. PATENT DOCUMENTS

8,325,034 B2 12/2012 Moore et al.
8,325,636 B2 12/2012 Binder
8,325,693 B2 12/2012 Binder et al.
8,330,259 B2 12/2012 Soler Castany et al.
8,335,596 B2 12/2012 Raman et al.
8,340,438 B2 12/2012 Anderson et al.
8,343,145 B2 1/2013 Brannan et al.
8,344,829 B2 1/2013 Miller, II et al.
8,354,970 B2 1/2013 Armbrecht et al.
8,359,124 B2 1/2013 Zhou et al.
8,362,775 B2 1/2013 Speckner et al.
8,363,313 B2 1/2013 Nakaguma et al.
8,369,667 B2 2/2013 Rose et al.
8,373,095 B2 2/2013 Huynh et al.
8,373,597 B2 2/2013 Schadler et al.
8,374,821 B2 2/2013 Rousselle et al.
8,384,600 B2 2/2013 Huang et al.
8,385,978 B2 2/2013 Leung et al.
8,386,198 B2 2/2013 Lancaster
8,390,307 B2 3/2013 Slupsky et al.
8,390,402 B2 3/2013 Kunes et al.
8,405,567 B2 3/2013 Park et al.
8,406,239 B2 3/2013 Hurwitz et al.
8,406,593 B2 3/2013 Molin et al.
8,407,687 B2 3/2013 Moshir et al.
8,412,130 B2 4/2013 Suematsu et al.
8,414,326 B2 4/2013 Bowman
8,415,884 B2 4/2013 Chen et al.
8,428,033 B2 4/2013 Hettstedt et al.
8,433,168 B2 4/2013 Filippov et al.
8,433,338 B1 4/2013 Flynn et al.
8,434,103 B2 4/2013 Tsuchida et al.
8,437,383 B2 5/2013 Wiwel et al.
8,452,101 B2 5/2013 Ishikawa et al.
8,452,555 B2 5/2013 Hayward et al.
8,457,027 B2 6/2013 Dougherty et al.
8,458,453 B1 6/2013 Mahalingaiah et al.
8,462,063 B2 6/2013 Gummalla et al.
8,467,363 B2 6/2013 Lea et al.
8,468,244 B2 6/2013 Redlich et al.
8,471,513 B2 6/2013 Han
8,472,327 B2 6/2013 DelRegno et al.
8,484,137 B2 7/2013 Johnson et al.
8,484,511 B2 7/2013 Tidwell et al.
8,495,718 B2 7/2013 Han et al.
8,497,749 B2 7/2013 Elmore
8,503,845 B2 8/2013 Winzer et al.
8,504,135 B2 8/2013 Bourqui et al.
8,505,057 B2 8/2013 Rogers
8,509,114 B1 8/2013 Szajdecki
8,514,980 B2 8/2013 Kuhtz
8,515,383 B2 8/2013 Prince et al.
8,516,129 B1 8/2013 Skene et al.
8,516,470 B1 8/2013 Joshi et al.
8,516,474 B2 8/2013 Lamba et al.
8,519,892 B2 8/2013 Ding et al.
8,520,578 B2 8/2013 Rayment et al.
8,520,636 B2 8/2013 Xu
8,520,931 B2 8/2013 Tateno et al.
8,528,059 B1 9/2013 Saluzzo et al.
8,532,023 B2 9/2013 Buddhikot et al.
8,532,046 B2 9/2013 Hu et al.
8,532,492 B2 9/2013 Sadowski et al.
8,536,857 B2 9/2013 Nero, Jr. et al.
8,537,068 B2 9/2013 Call et al.
8,537,705 B2 9/2013 Afkhamie et al.
8,538,428 B2 9/2013 Bartlett et al.
8,539,540 B2 9/2013 Zenoni
8,539,569 B2 9/2013 Mansour
8,542,968 B2 9/2013 Dong et al.
8,545,322 B2 10/2013 George et al.
8,548,294 B2 10/2013 Toge et al.
8,553,646 B2 10/2013 Kumar
8,561,104 B1 10/2013 Dow et al.
8,561,181 B1 10/2013 Sobel et al.
8,565,568 B2 10/2013 Bigot-Astruc et al.
8,566,058 B2 10/2013 Pupalaikis et al.
8,572,247 B2 10/2013 Larson et al.
8,572,639 B2 10/2013 Ficco
8,572,661 B2 10/2013 Strong et al.
8,578,076 B2 11/2013 van der Linden et al.
8,578,486 B2 11/2013 Lifliand et al.
8,582,502 B2 11/2013 Conte et al.
8,584,195 B2 11/2013 Sherlock et al.
8,587,490 B2 11/2013 Niver et al.
8,587,492 B2 11/2013 Runyon et al.
8,588,567 B2 11/2013 Kamps et al.
8,588,840 B2 11/2013 Truong et al.
8,588,991 B1 11/2013 Forbes, Jr.
8,593,238 B2 11/2013 Miller, II et al.
8,594,956 B2 11/2013 McBee et al.
8,595,141 B2 11/2013 Hao et al.
8,599,150 B2 12/2013 Philipp
8,600,602 B1 12/2013 Watson et al.
8,604,982 B2 12/2013 Gummalla et al.
8,604,999 B2 12/2013 Abumrad et al.
8,605,361 B2 12/2013 Batchko et al.
8,605,579 B2 12/2013 Abraham et al.
8,612,550 B2 12/2013 Yoo et al.
8,613,020 B2 12/2013 Knudson et al.
8,615,190 B2 12/2013 Lu
8,625,547 B1 1/2014 Miller et al.
8,629,811 B2 1/2014 Gaynor et al.
8,639,260 B2 1/2014 Fox et al.
8,639,390 B2 1/2014 Tamarkin et al.
8,639,934 B2 1/2014 Kruglick
8,644,219 B2 2/2014 Nishizaka et al.
8,653,906 B2 2/2014 Mahon et al.
8,655,396 B2 2/2014 Malladi et al.
8,656,458 B2 2/2014 Heffez et al.
8,660,526 B1 2/2014 Heiderscheit et al.
8,660,698 B2 2/2014 Phillips et al.
8,665,102 B2 3/2014 Salewske et al.
8,666,553 B2 3/2014 Phillips et al.
8,670,946 B2 3/2014 Salazar et al.
8,674,630 B1 3/2014 Cornelius et al.
8,676,186 B2 3/2014 Niu
8,680,450 B2 3/2014 Pritchard et al.
8,680,706 B2 3/2014 Zyren et al.
8,681,463 B2 3/2014 Franks et al.
8,686,911 B2 4/2014 Kim et al.
8,687,650 B2 4/2014 King
8,688,153 B2 4/2014 Komori et al.
8,699,454 B2 4/2014 Hapsari et al.
8,699,461 B2 4/2014 Qian et al.
8,705,925 B2 4/2014 Terada et al.
8,706,026 B2 4/2014 Truong et al.
8,707,432 B1 4/2014 Rathi et al.
8,711,538 B2 4/2014 Woodworth et al.
8,711,732 B2 4/2014 Johnson et al.
8,711,806 B2 4/2014 Lim et al.
8,711,857 B2 4/2014 Jackson et al.
8,712,200 B1 4/2014 Abernathy et al.
8,719,938 B2 5/2014 Demeter et al.
8,723,730 B2 5/2014 Lu et al.
8,724,102 B2 5/2014 Urban et al.
8,729,857 B2 5/2014 Stählin et al.
8,731,358 B2 5/2014 Pare et al.
8,732,476 B1 5/2014 Van et al.
8,736,502 B1 5/2014 Mehr et al.
8,737,793 B2 5/2014 Imamura et al.
8,738,318 B2 5/2014 Spillane
8,742,997 B2 6/2014 McPeak et al.
8,743,004 B2 6/2014 Haziza
8,749,449 B2 6/2014 Caldwell et al.
8,750,097 B2 6/2014 Maenpaa et al.
8,750,664 B2 6/2014 Huang et al.
8,754,852 B2 6/2014 Lee et al.
8,755,659 B2 6/2014 Imamura et al.
8,760,354 B2 6/2014 Flannery et al.
8,761,792 B2 6/2014 Sennett et al.
8,763,097 B2 6/2014 Bhatnagar et al.
8,766,657 B2 7/2014 DeJean et al.
8,767,071 B1 7/2014 Marshall

(56) **References Cited**

U.S. PATENT DOCUMENTS

8,769,622	B2	7/2014	Chang et al.
8,773,312	B1	7/2014	Diaz et al.
8,780,012	B2	7/2014	Llombart Juan et al.
8,782,195	B2	7/2014	Foti
8,786,284	B2	7/2014	Sirigiri et al.
8,786,514	B2	7/2014	Dickie et al.
8,789,091	B2	7/2014	Eldering et al.
8,792,760	B2	7/2014	Choi et al.
8,792,933	B2	7/2014	Chen et al.
8,793,363	B2	7/2014	Sater et al.
8,793,742	B2	7/2014	Macrae et al.
8,797,207	B2	8/2014	Kienzle et al.
8,797,848	B2	8/2014	Kim et al.
8,804,667	B2	8/2014	Wang
8,806,202	B2	8/2014	Shoemake et al.
8,810,404	B2	8/2014	Bertoncini et al.
8,810,421	B2	8/2014	Deaver, Sr. et al.
8,810,468	B2	8/2014	Cannon et al.
8,811,278	B2	8/2014	Hori et al.
8,811,912	B2	8/2014	Austin et al.
8,812,050	B1	8/2014	Bencheikh et al.
8,812,154	B2	8/2014	Vian et al.
8,817,741	B2	8/2014	Shaheen
8,824,380	B2	9/2014	Jetcheva et al.
8,825,239	B2	9/2014	Cooper et al.
8,829,934	B2	9/2014	Sellathamby et al.
8,830,112	B1	9/2014	Buehler et al.
8,831,506	B2	9/2014	Claret et al.
8,836,503	B2	9/2014	Girod et al.
8,836,607	B2	9/2014	Cook et al.
8,839,350	B1	9/2014	Shapcott et al.
8,847,840	B1	9/2014	Diaz et al.
8,847,846	B1	9/2014	Diaz et al.
8,856,239	B1	10/2014	Oliver et al.
8,856,530	B2	10/2014	Lamberg et al.
8,863,245	B1	10/2014	Abhyanker
8,866,691	B2	10/2014	Montgomery et al.
8,866,695	B2	10/2014	Jefferson et al.
8,867,226	B2	10/2014	Colomb et al.
8,867,798	B2	10/2014	Shuster
8,872,032	B2	10/2014	Su et al.
8,875,224	B2	10/2014	Gross et al.
8,878,740	B2	11/2014	Coupland et al.
8,880,765	B2	11/2014	Seal et al.
8,881,588	B2	11/2014	Baer et al.
8,885,689	B2	11/2014	Blasco Claret et al.
8,886,229	B2	11/2014	Agrawal et al.
8,887,212	B2	11/2014	Dua
8,890,759	B2	11/2014	Pantea et al.
8,893,246	B2	11/2014	El-Moussa et al.
8,897,215	B2	11/2014	Hazani et al.
8,897,499	B2	11/2014	Rekimoto
8,897,697	B1	11/2014	Bennett
8,901,916	B2	12/2014	Rodriguez et al.
8,903,214	B2	12/2014	Alkeskjold
8,907,222	B2	12/2014	Stranskky
8,907,845	B2	12/2014	Jones
8,908,502	B2	12/2014	Hayashitani
8,908,573	B1	12/2014	Wang et al.
8,913,862	B1	12/2014	Emmerich et al.
8,917,210	B2	12/2014	Shamim et al.
8,917,215	B2	12/2014	Pohl
8,917,964	B2	12/2014	Blew et al.
8,918,108	B2	12/2014	Van Heeswyk et al.
8,918,135	B2	12/2014	Kang et al.
8,922,447	B2	12/2014	Gao et al.
8,925,079	B2	12/2014	Miyake et al.
8,929,841	B2	1/2015	Rofougaran et al.
8,934,747	B2	1/2015	Smith et al.
8,937,577	B2	1/2015	Gerini et al.
8,938,144	B2	1/2015	Hennink et al.
8,938,255	B2	1/2015	Dalla et al.
8,941,912	B2	1/2015	Ichii et al.
8,947,258	B2	2/2015	Reid et al.
8,948,235	B2	2/2015	Proctor, Jr. et al.
8,948,690	B2	2/2015	Duerksen et al.
8,952,678	B2	2/2015	Giboney et al.
8,955,051	B2	2/2015	Marzii
8,955,075	B2	2/2015	Smith et al.
8,957,818	B2	2/2015	Chen et al.
8,957,821	B1	2/2015	Matyas et al.
8,958,356	B2	2/2015	Lu et al.
8,958,665	B2	2/2015	Ziari et al.
8,958,812	B2	2/2015	Weiguo
8,958,980	B2	2/2015	Hagan et al.
8,963,790	B2	2/2015	Brown et al.
8,964,433	B2	2/2015	Hai-Maharsi
8,966,609	B2	2/2015	Lee et al.
8,968,287	B2	3/2015	Shroff et al.
8,970,438	B2	3/2015	Hager et al.
8,984,113	B2	3/2015	Li et al.
8,989,788	B2	3/2015	Kim et al.
8,994,473	B2	3/2015	Levi et al.
8,994,474	B2	3/2015	Mahon et al.
8,996,188	B2	3/2015	Frader-thompson et al.
8,996,728	B2	3/2015	Cochinwala et al.
9,000,353	B2	4/2015	Seo et al.
9,001,689	B1	4/2015	Ponnampalam et al.
9,001,717	B2	4/2015	Chun et al.
9,003,492	B2	4/2015	Katar
9,008,208	B2	4/2015	Khandani
9,008,513	B2	4/2015	Kim et al.
9,009,460	B2	4/2015	Chen
9,013,361	B1	4/2015	Lam et al.
9,014,621	B2	4/2015	Mohebbi
9,015,139	B2	4/2015	Wong
9,015,467	B2	4/2015	Buer
9,019,164	B2	4/2015	Syed et al.
9,019,595	B2	4/2015	Jain et al.
9,019,846	B2	4/2015	Shetty et al.
9,019,892	B2	4/2015	Zhou et al.
9,020,555	B2	4/2015	Sheikh et al.
9,021,251	B2	4/2015	Chawla
9,021,575	B2	4/2015	Martini
RE45,514	E	5/2015	Brown
9,024,831	B2	5/2015	Wang et al.
9,031,725	B1	5/2015	Diesposti et al.
9,037,516	B2	5/2015	Abhyanker
9,042,245	B2	5/2015	Tzannes et al.
9,042,812	B1	5/2015	Bennett et al.
9,054,782	B2	6/2015	Hunter et al.
9,065,172	B2	6/2015	Lewry et al.
9,065,177	B2	6/2015	Alexopoulos
9,066,224	B2	6/2015	Schwengler
9,070,962	B2	6/2015	Kobayashi
9,070,964	B1	6/2015	Schuss et al.
9,079,349	B2	7/2015	Slafer
9,082,307	B2	7/2015	Sharawi
9,083,083	B2	7/2015	Hills et al.
9,083,425	B1	7/2015	Moussouris et al.
9,083,581	B1	7/2015	Addepalli et al.
9,084,124	B2	7/2015	Nickel et al.
9,092,962	B1	7/2015	Merrill et al.
9,092,963	B2	7/2015	Fetzer et al.
9,094,407	B1	7/2015	Matthieu
9,094,840	B2	7/2015	Liu et al.
9,098,325	B2	8/2015	Reddin
9,099,787	B2	8/2015	Blech
9,103,864	B2	8/2015	Ali
9,105,981	B2	8/2015	Syed
9,106,617	B2	8/2015	Kshirsagar et al.
9,112,281	B2	8/2015	Bresciani et al.
9,113,347	B2	8/2015	Henry
9,119,127	B1	8/2015	Henry
9,119,179	B1	8/2015	Firoiu et al.
9,128,941	B2	9/2015	Shulman
9,130,641	B2	9/2015	Mohebbi
9,134,945	B2	9/2015	Husain
9,137,485	B2	9/2015	Bar-Niv et al.
9,142,334	B2	9/2015	Muto et al.
9,143,084	B2	9/2015	Perez et al.
9,143,196	B2	9/2015	Schwengler
9,148,186	B1	9/2015	Murphy et al.
9,154,641	B2	10/2015	Shaw

(56) **References Cited**

U.S. PATENT DOCUMENTS

9,157,954	B2	10/2015	Nickel
9,158,418	B2	10/2015	Oda et al.
9,158,427	B1	10/2015	Wang
9,167,535	B2	10/2015	Christoffersson et al.
9,171,458	B2	10/2015	Salter
9,173,217	B2	10/2015	Teng et al.
9,178,282	B2	11/2015	Mittleman et al.
9,194,930	B2	11/2015	Pupalaikis
9,201,556	B2	12/2015	Free et al.
9,202,371	B2	12/2015	Jain
9,203,149	B2	12/2015	Henderson et al.
9,204,112	B2	12/2015	Pasteris et al.
9,204,418	B2	12/2015	Siomina et al.
9,207,168	B2	12/2015	Lovely et al.
9,209,902	B2	12/2015	Willis, III et al.
9,210,192	B1	12/2015	Pathuri et al.
9,210,586	B2	12/2015	Catovic et al.
9,213,905	B2	12/2015	Lange et al.
9,219,307	B2	12/2015	Takahashi et al.
9,219,594	B2	12/2015	Khlat
9,225,396	B2	12/2015	Maltsev et al.
9,229,956	B2	1/2016	Ke et al.
9,235,763	B2	1/2016	Brown et al.
9,240,835	B2	1/2016	Cune et al.
9,244,117	B2	1/2016	Khan et al.
9,246,231	B2	1/2016	Ju
9,246,334	B2	1/2016	Lo et al.
9,253,588	B2	2/2016	Schmidt et al.
9,260,244	B1	2/2016	Cohn
9,264,204	B2	2/2016	Seo et al.
9,265,078	B2	2/2016	Lim et al.
9,270,013	B2	2/2016	Ley
9,271,185	B2	2/2016	Abdelmonem et al.
9,276,303	B2	3/2016	Chang et al.
9,276,304	B2	3/2016	Behan
9,277,331	B2	3/2016	Chao et al.
9,281,564	B2	3/2016	Vincent
9,282,144	B2	3/2016	Tebay et al.
9,285,461	B2	3/2016	Townley et al.
9,287,605	B2	3/2016	Daughenbaugh et al.
9,288,844	B1	3/2016	Akhavan-saraf et al.
9,289,177	B2	3/2016	Samsudin et al.
9,293,798	B2	3/2016	Ye
9,293,801	B2	3/2016	Courtney et al.
9,302,770	B2	4/2016	Cohen et al.
9,306,682	B2	4/2016	Singh
9,312,929	B2	4/2016	Forenza et al.
9,315,663	B2	4/2016	Appleby
9,319,311	B2	4/2016	Wang et al.
9,324,003	B2	4/2016	France et al.
9,324,020	B2	4/2016	Nazarov
9,325,067	B2	4/2016	Ali et al.
9,325,516	B2	4/2016	Frei et al.
9,326,316	B2	4/2016	Yonge et al.
9,334,052	B2	5/2016	Ubhi et al.
9,337,895	B2	5/2016	Turner et al.
9,338,823	B2	5/2016	Saban et al.
9,346,560	B2	5/2016	Wang
9,350,063	B2	5/2016	Herbsommer et al.
9,351,182	B2	5/2016	Elliott et al.
9,356,358	B2	5/2016	Hu et al.
9,362,629	B2	6/2016	Miller et al.
9,363,333	B2	6/2016	Basso et al.
9,363,690	B1	6/2016	Suthar et al.
9,363,761	B2	6/2016	Venkatraman
9,366,743	B2	6/2016	Doshi et al.
9,368,275	B2	6/2016	McBee et al.
9,369,177	B2	6/2016	Hui et al.
9,372,228	B2	6/2016	Gavin et al.
9,379,527	B2	6/2016	Jean et al.
9,379,556	B2	6/2016	Haensgen et al.
9,380,857	B2	7/2016	Davis et al.
9,391,874	B2	7/2016	Corti et al.
9,393,683	B2	7/2016	Kimberlin et al.
9,394,716	B2	7/2016	Butler et al.
9,397,380	B2	7/2016	Kudela et al.
9,400,941	B2	7/2016	Meier et al.
9,401,863	B2	7/2016	Hui et al.
9,404,750	B2	8/2016	Rios et al.
9,413,519	B2	8/2016	Khoshnood et al.
9,414,126	B1	8/2016	Zinevich
9,417,731	B2	8/2016	Premont et al.
9,419,712	B2	8/2016	Heidler
9,421,869	B1	8/2016	Ananthanarayanan et al.
9,422,139	B1	8/2016	Bialkowski et al.
9,432,478	B2	8/2016	Gibbon et al.
9,432,865	B1	8/2016	Jadunandan et al.
9,439,092	B1	9/2016	Chukka et al.
9,443,417	B2	9/2016	Wang
9,458,974	B2	10/2016	Townsend, Jr. et al.
9,459,746	B2	10/2016	Zarraga et al.
9,461,706	B1	10/2016	Bennett et al.
9,465,397	B2	10/2016	Forbes, Jr. et al.
9,467,219	B2	10/2016	Vilhar
9,467,870	B2	10/2016	Bennett
9,476,932	B2	10/2016	Furse et al.
9,478,865	B1	10/2016	Willis et al.
9,479,241	B2	10/2016	Pabla
9,479,266	B2	10/2016	Henry et al.
9,479,299	B2	10/2016	Kim et al.
9,479,392	B2	10/2016	Anderson et al.
9,479,535	B2	10/2016	Cohen et al.
9,490,869	B1	11/2016	Henry
9,490,913	B2	11/2016	Berlin
9,495,037	B2	11/2016	King-Smith
9,496,921	B1	11/2016	Corum
9,497,572	B2	11/2016	Britt et al.
9,503,170	B2	11/2016	Vu
9,503,189	B2	11/2016	Henry et al.
9,509,415	B1	11/2016	Henry et al.
9,510,203	B2	11/2016	Jactat et al.
9,515,367	B2	12/2016	Herbsommer et al.
9,544,006	B2	1/2017	Henry et al.
9,577,306	B2	2/2017	Willis, III et al.
9,635,619	B2	4/2017	Liu et al.
9,653,816	B2	5/2017	Ferreri et al.
2001/0030789	A1	10/2001	Jiang et al.
2001/0045914	A1	11/2001	Bunker et al.
2002/0002040	A1	1/2002	Kline et al.
2002/0008672	A1	1/2002	Gothard et al.
2002/0011960	A1	1/2002	Yuanzhu et al.
2002/0021716	A1	2/2002	Terk et al.
2002/0024424	A1	2/2002	Burns et al.
2002/0027481	A1	3/2002	Fiedziuszko et al.
2002/0040439	A1	4/2002	Kellum et al.
2002/0057223	A1	5/2002	Hook et al.
2002/0061217	A1	5/2002	Hillman et al.
2002/0069417	A1	6/2002	Kliger et al.
2002/0076188	A1	6/2002	Kimerling et al.
2002/0083194	A1	6/2002	Bak et al.
2002/0091807	A1	7/2002	Goodman et al.
2002/0099949	A1	7/2002	Fries et al.
2002/0101852	A1	8/2002	Say et al.
2002/0111997	A1	8/2002	Herlihy et al.
2002/0156917	A1	10/2002	Nye et al.
2002/0186694	A1	12/2002	Mahajan et al.
2002/0197979	A1	12/2002	Vanderveen et al.
2003/0002125	A1	1/2003	Fuse et al.
2003/0002476	A1	1/2003	Chung et al.
2003/0010528	A1	1/2003	Niles
2003/0022694	A1	1/2003	Olsen et al.
2003/0038753	A1	2/2003	Mahon et al.
2003/0049003	A1	3/2003	Ahmad et al.
2003/0054793	A1	3/2003	Manis et al.
2003/0054811	A1	3/2003	Han et al.
2003/0061346	A1	3/2003	Pekary et al.
2003/0094976	A1	5/2003	Miyashita et al.
2003/0095208	A1	5/2003	Chouraqui et al.
2003/0134660	A1	7/2003	Himmel et al.
2003/0137464	A1	7/2003	Foti et al.
2003/0151548	A1	8/2003	Kingsley et al.
2003/0152331	A1	8/2003	Dair et al.
2003/0164794	A1	9/2003	Haynes et al.
2003/0188308	A1	10/2003	Kizuka

(56) **References Cited**

U.S. PATENT DOCUMENTS

2003/0189974	A1	10/2003	Ferry et al.	
2003/0190110	A1	10/2003	Kline et al.	
2003/0193365	A1	10/2003	Loheit et al.	
2003/0202756	A1	10/2003	Hurley et al.	
2003/0210197	A1	11/2003	Cencich et al.	
2003/0224784	A1	12/2003	Hunt et al.	
2004/0005039	A1	1/2004	White et al.	
2004/0015725	A1	1/2004	Boneh et al.	
2004/0023640	A1	2/2004	Ballai et al.	
2004/0024913	A1	2/2004	Ikeda et al.	
2004/0037566	A1	2/2004	Willebrand et al.	
2004/0048596	A1	3/2004	Wyrzykowska et al.	
2004/0054425	A1	3/2004	Elmore	
2004/0084582	A1	5/2004	Kralic et al.	
2004/0085153	A1	5/2004	Fukunaga et al.	
2004/0090312	A1	5/2004	Manis et al.	
2004/0091032	A1	5/2004	Duchi et al.	
2004/0100343	A1	5/2004	Tsu et al.	
2004/0104410	A1	6/2004	Gilbert et al.	
2004/0108963	A1	6/2004	Clymer et al.	
2004/0109608	A1	6/2004	Love et al.	
2004/0113756	A1	6/2004	Mollenkopf et al.	
2004/0113757	A1	6/2004	White, II et al.	
2004/0119564	A1	6/2004	Itoh et al.	
2004/0131310	A1	7/2004	Walker et al.	
2004/0163135	A1	8/2004	Giaccherini et al.	
2004/0165669	A1	8/2004	Otsuka et al.	
2004/0169572	A1	9/2004	Elmore et al.	
2004/0196784	A1	10/2004	Larsson et al.	
2004/0198228	A1	10/2004	Raghothaman et al.	
2004/0208591	A1	10/2004	Willebrand et al.	
2004/0212481	A1	10/2004	Abraham et al.	
2004/0213147	A1	10/2004	Wiese et al.	
2004/0213189	A1	10/2004	Alspaugh et al.	
2004/0213294	A1	10/2004	Hughes et al.	
2004/0242185	A1	12/2004	Lee et al.	
2004/0250069	A1	12/2004	Kosamo et al.	
2005/0002408	A1	1/2005	Lee et al.	
2005/0005854	A1	1/2005	Suzuki et al.	
2005/0017825	A1	1/2005	Hansen	
2005/0031267	A1	2/2005	Sumimoto et al.	
2005/0046511	A1	3/2005	Stenberg et al.	
2005/0063422	A1	3/2005	Lazar et al.	
2005/0068223	A1	3/2005	Vavik et al.	
2005/0069321	A1	3/2005	Sullivan et al.	
2005/0074208	A1	4/2005	Badcock et al.	
2005/0097396	A1	5/2005	Wood	
2005/0102185	A1	5/2005	Barker et al.	
2005/0111533	A1*	5/2005	Berkman	H04B 3/542 375/220
2005/0141808	A1	6/2005	Cheben et al.	
2005/0143868	A1	6/2005	Whelan et al.	
2005/0151659	A1	7/2005	Donovan et al.	
2005/0159187	A1	7/2005	Mendolia et al.	
2005/0164666	A1	7/2005	Lang et al.	
2005/0168326	A1	8/2005	White et al.	
2005/0169056	A1*	8/2005	Berkman	G02B 6/483 365/185.22
2005/0169401	A1	8/2005	Abraham et al.	
2005/0175113	A1	8/2005	Okuyama et al.	
2005/0177463	A1	8/2005	Crutchfield et al.	
2005/0190101	A1	9/2005	Hiramatsu et al.	
2005/0208949	A1	9/2005	Chiueh et al.	
2005/0212626	A1	9/2005	Takamatsu et al.	
2005/0219126	A1	10/2005	Rebeiz et al.	
2005/0219135	A1	10/2005	Lee et al.	
2005/0220180	A1	10/2005	Barlev	
2005/0226353	A1	10/2005	Gebara et al.	
2005/0249245	A1	11/2005	Hazani et al.	
2005/0258920	A1	11/2005	Elmore	
2006/0034724	A1	2/2006	Hamano et al.	
2006/0038660	A1	2/2006	Doumuki et al.	
2006/0053486	A1	3/2006	Wesinger et al.	
2006/0071776	A1	4/2006	White et al.	
2006/0077906	A1	4/2006	Maegawa et al.	
2006/0082516	A1	4/2006	Strickland et al.	
2006/0085813	A1	4/2006	Giraldin et al.	
2006/0094439	A1	5/2006	Christian et al.	
2006/0106741	A1	5/2006	Janarthanan et al.	
2006/0111047	A1	5/2006	Louberg et al.	
2006/0113425	A1	6/2006	Rader et al.	
2006/0114925	A1	6/2006	Gerszberg et al.	
2006/0119528	A1	6/2006	Bhattacharyya et al.	
2006/0120399	A1	6/2006	Claret et al.	
2006/0128322	A1	6/2006	Igarashi et al.	
2006/0132380	A1	6/2006	Imai et al.	
2006/0153878	A1	7/2006	Savarino et al.	
2006/0172781	A1	8/2006	Mohebbi et al.	
2006/0176124	A1	8/2006	Mansour et al.	
2006/0181394	A1	8/2006	Clarke et al.	
2006/0187023	A1	8/2006	Iwamura et al.	
2006/0192672	A1	8/2006	Gidge et al.	
2006/0220833	A1	10/2006	Berkman et al.	
2006/0221995	A1	10/2006	Berkman et al.	
2006/0232493	A1	10/2006	Huang et al.	
2006/0238347	A1	10/2006	Parkinson et al.	
2006/0239501	A1	10/2006	Petrovic et al.	
2006/0244672	A1	11/2006	Avakian et al.	
2006/0249622	A1	11/2006	Steele et al.	
2006/0255930	A1	11/2006	Berkman et al.	
2006/0286927	A1*	12/2006	Berkman	H04H 20/84 455/3.02
2007/0002771	A1	1/2007	Berkman et al.	
2007/0022475	A1	1/2007	Rossi et al.	
2007/0025265	A1	2/2007	Porras et al.	
2007/0025386	A1	2/2007	Riedel et al.	
2007/0040628	A1	2/2007	Kanno et al.	
2007/0041464	A1	2/2007	Kim et al.	
2007/0041554	A1	2/2007	Newman	
2007/0054622	A1	3/2007	Berkman	
2007/0063914	A1	3/2007	Becker et al.	
2007/0090185	A1	4/2007	Lewkowitz et al.	
2007/0103333	A1	5/2007	Michalski et al.	
2007/0105508	A1	5/2007	Tong et al.	
2007/0135044	A1	6/2007	Rhodes et al.	
2007/0144779	A1	6/2007	Vicente et al.	
2007/0164908	A1	7/2007	Turchinetz et al.	
2007/0185621	A1	8/2007	Gilmore et al.	
2007/0189182	A1	8/2007	Berkman et al.	
2007/0201540	A1	8/2007	Berkman et al.	
2007/0202913	A1	8/2007	Ban et al.	
2007/0211689	A1	9/2007	Campero et al.	
2007/0211786	A1	9/2007	Shattil et al.	
2007/0216596	A1	9/2007	Lewis et al.	
2007/0223381	A1	9/2007	Radtke et al.	
2007/0226779	A1	9/2007	Yokomitsu et al.	
2007/0229184	A1	10/2007	Liu et al.	
2007/0229231	A1	10/2007	Hurwitz et al.	
2007/0252998	A1	11/2007	Berthold et al.	
2007/0257858	A1	11/2007	Liu et al.	
2007/0258484	A1	11/2007	Tolaio et al.	
2007/0268124	A1	11/2007	Berkman et al.	
2007/0268846	A1	11/2007	Proctor et al.	
2007/0300280	A1	12/2007	Turner et al.	
2008/0002652	A1	1/2008	Gupta et al.	
2008/0003872	A1	1/2008	Chen et al.	
2008/0007416	A1	1/2008	Cern et al.	
2008/0008116	A1	1/2008	Buga et al.	
2008/0043655	A1	2/2008	Lee et al.	
2008/0055149	A1	3/2008	Rees et al.	
2008/0060832	A1	3/2008	Razavi et al.	
2008/0064331	A1	3/2008	Washiro et al.	
2008/0077336	A1	3/2008	Fernandes et al.	
2008/0080389	A1	4/2008	Hart et al.	
2008/0084937	A1	4/2008	Barthold et al.	
2008/0094298	A1	4/2008	Kralovec et al.	
2008/0101798	A1	5/2008	Healey et al.	
2008/0120667	A1	5/2008	Zaltsman	
2008/0122723	A1	5/2008	Rofougaran et al.	
2008/0130639	A1	6/2008	Costa-Requena et al.	
2008/0133922	A1	6/2008	Williams et al.	
2008/0143491	A1	6/2008	Deaver et al.	
2008/0150790	A1	6/2008	Voigtlaender et al.	
2008/0151916	A1	6/2008	Jetcheva et al.	

(56) **References Cited**

U.S. PATENT DOCUMENTS

2008/0153416 A1 6/2008 Washiro et al.
2008/0177678 A1 7/2008 Di Martini et al.
2008/0191851 A1 8/2008 Koga et al.
2008/0211727 A1* 9/2008 Elmore H01P 3/10 343/773
2008/0238796 A1 10/2008 Rofougaran et al.
2008/0247716 A1 10/2008 Thomas et al.
2008/0252522 A1 10/2008 Asbridge et al.
2008/0253723 A1 10/2008 Stokes et al.
2008/0255782 A1 10/2008 Bilac et al.
2008/0258993 A1 10/2008 Gummalla et al.
2008/0266060 A1 10/2008 Takei et al.
2008/0267076 A1 10/2008 Laperi et al.
2008/0279199 A1 11/2008 Park et al.
2008/0280574 A1 11/2008 Rofougaran et al.
2008/0313691 A1 12/2008 Cholas
2009/0002137 A1 1/2009 Radtke et al.
2009/0007189 A1 1/2009 Gutknecht
2009/0007190 A1 1/2009 Weber et al.
2009/0007194 A1 1/2009 Brady, Jr. et al.
2009/0009408 A1 1/2009 Rofougaran et al.
2009/0015239 A1 1/2009 Georgiou et al.
2009/0054056 A1 2/2009 Gil et al.
2009/0054737 A1 2/2009 Magar et al.
2009/0061940 A1 3/2009 Scheinert et al.
2009/0067441 A1 3/2009 Ansari et al.
2009/0079660 A1* 3/2009 Elmore H04B 3/56 343/904
2009/0085726 A1 4/2009 Radtke et al.
2009/0088907 A1 4/2009 Lewis et al.
2009/0093267 A1 4/2009 Ariyur et al.
2009/0109981 A1 4/2009 Keselman
2009/0125351 A1 5/2009 Davis, Jr. et al.
2009/0129301 A1 5/2009 Belimpasakis et al.
2009/0135848 A1 5/2009 Chan et al.
2009/0138931 A1 5/2009 Lin et al.
2009/0140852 A1 6/2009 Stolarczyk et al.
2009/0144417 A1 6/2009 Kisel et al.
2009/0171780 A1 7/2009 Aldrey et al.
2009/0175195 A1 7/2009 Macauley et al.
2009/0181664 A1 7/2009 Kuruvilla et al.
2009/0201133 A1 8/2009 Bruns et al.
2009/0202020 A1 8/2009 Hafeez et al.
2009/0210901 A1 8/2009 Hawkins et al.
2009/0212938 A1 8/2009 Swaim et al.
2009/0250449 A1 10/2009 Petrenko et al.
2009/0254971 A1 10/2009 Herz et al.
2009/0258652 A1 10/2009 Lambert et al.
2009/0284435 A1 11/2009 Elmore et al.
2009/0286482 A1 11/2009 Gorokhov et al.
2009/0289863 A1 11/2009 Lier et al.
2009/0304124 A1 12/2009 Graef et al.
2009/0311960 A1 12/2009 Farahani et al.
2009/0315668 A1 12/2009 Leete, III et al.
2009/0320058 A1 12/2009 Wehmeyer et al.
2009/0325479 A1 12/2009 Chakrabarti et al.
2009/0325628 A1 12/2009 Becker et al.
2010/0002618 A1 1/2010 Eichinger et al.
2010/0002731 A1 1/2010 Kimura et al.
2010/0013696 A1 1/2010 Schmitt et al.
2010/0026607 A1 2/2010 Imai et al.
2010/0039339 A1 2/2010 Kuroda et al.
2010/0045447 A1 2/2010 Mollenkopf et al.
2010/0052799 A1 3/2010 Watanabe et al.
2010/0053019 A1 3/2010 Ikawa et al.
2010/0057894 A1 3/2010 Glasser
2010/0080203 A1 4/2010 Reynolds et al.
2010/0085036 A1 4/2010 Banting et al.
2010/0090887 A1 4/2010 Cooper et al.
2010/0091712 A1 4/2010 Lu et al.
2010/0100918 A1 4/2010 Egan, Jr. et al.
2010/0111521 A1 5/2010 Kim et al.
2010/0119234 A1 5/2010 Suematsu et al.
2010/0121945 A1 5/2010 Gerber et al.
2010/0127848 A1 5/2010 Mustapha et al.
2010/0141527 A1 6/2010 Lalezari et al.
2010/0142435 A1 6/2010 Kim et al.
2010/0150215 A1 6/2010 Black et al.
2010/0153990 A1 6/2010 Ress et al.
2010/0169937 A1 7/2010 Atwal et al.
2010/0175080 A1 7/2010 Yuen et al.
2010/0176894 A1 7/2010 Tahara et al.
2010/0177894 A1 7/2010 Yasuma et al.
2010/0185614 A1 7/2010 O'Brien et al.
2010/0201313 A1 8/2010 Vorenkamp et al.
2010/0214183 A1* 8/2010 Stoneback H01P 1/2005 343/705
2010/0214185 A1 8/2010 Sammoura et al.
2010/0220024 A1 9/2010 Snow et al.
2010/0224732 A1 9/2010 Olson et al.
2010/0225426 A1 9/2010 Unger et al.
2010/0232539 A1 9/2010 Han et al.
2010/0243633 A1 9/2010 Huynh et al.
2010/0253450 A1 10/2010 Kim et al.
2010/0256955 A1 10/2010 Pupalaikis et al.
2010/0265877 A1 10/2010 Foxworthy et al.
2010/0266063 A1 10/2010 Harel et al.
2010/0283693 A1 11/2010 Xie et al.
2010/0284446 A1 11/2010 Mu et al.
2010/0319068 A1 12/2010 Abbadessa et al.
2010/0327880 A1 12/2010 Stein et al.
2011/0018704 A1* 1/2011 Burrows H04B 3/54 340/538
2011/0040861 A1 2/2011 Van der Merwe et al.
2011/0042120 A1 2/2011 Otsuka et al.
2011/0043051 A1 2/2011 Meskens et al.
2011/0053498 A1 3/2011 Nogueira-Nine
2011/0068893 A1 3/2011 Lahiri et al.
2011/0068988 A1 3/2011 Monte et al.
2011/0080301 A1 4/2011 Chang et al.
2011/0083399 A1 4/2011 Lettkeman et al.
2011/0103274 A1 5/2011 Vavik et al.
2011/0107364 A1 5/2011 Lajoie et al.
2011/0109499 A9 5/2011 Kienzle et al.
2011/0109936 A1 5/2011 Coffee et al.
2011/0110404 A1 5/2011 Washiro
2011/0118888 A1 5/2011 White et al.
2011/0130135 A1 6/2011 Trigui et al.
2011/0132658 A1 6/2011 Miller, II et al.
2011/0133865 A1 6/2011 Miller, II et al.
2011/0133867 A1 6/2011 Miller, II et al.
2011/0136432 A1 6/2011 Miller, II et al.
2011/0140911 A1 6/2011 Pant et al.
2011/0141555 A1 6/2011 Fermann et al.
2011/0143673 A1 6/2011 Landesman et al.
2011/0148578 A1 6/2011 Aloi et al.
2011/0148687 A1 6/2011 Wright et al.
2011/0164514 A1 7/2011 Afkhamie et al.
2011/0165847 A1 7/2011 Kawasaki et al.
2011/0169336 A1 7/2011 Yerazunis et al.
2011/0172000 A1 7/2011 Quigley et al.
2011/0173447 A1 7/2011 Zhang et al.
2011/0182174 A1 7/2011 Pi et al.
2011/0187578 A1* 8/2011 Farneth G01S 13/04 342/27
2011/0199265 A1 8/2011 Lin et al.
2011/0201269 A1 8/2011 Hobbs et al.
2011/0208450 A1 8/2011 Salka et al.
2011/0214176 A1 9/2011 Burch et al.
2011/0219402 A1 9/2011 Candelore et al.
2011/0220394 A1 9/2011 Szylakowski et al.
2011/0225046 A1 9/2011 Eldering et al.
2011/0228814 A1 9/2011 Washiro et al.
2011/0235536 A1 9/2011 Nishizaka et al.
2011/0268085 A1 11/2011 Barany et al.
2011/0274396 A1 11/2011 Nakajima et al.
2011/0286506 A1 11/2011 Libby et al.
2011/0291878 A1 12/2011 McLaughlin et al.
2011/0294509 A1 12/2011 Kim et al.
2011/0311231 A1 12/2011 Ridgway et al.
2011/0316645 A1 12/2011 Takeuchi et al.
2012/0002973 A1 1/2012 Bruzzi et al.
2012/0015382 A1 1/2012 Weitz et al.
2012/0015654 A1 1/2012 Palanki et al.

(56) **References Cited**

U.S. PATENT DOCUMENTS

2012/0019420	A1	1/2012	Caimi et al.
2012/0019427	A1	1/2012	Ishikawa et al.
2012/0038520	A1	2/2012	Cornwell et al.
2012/0039366	A1	2/2012	Wood et al.
2012/0046891	A1	2/2012	Yaney et al.
2012/0054571	A1	3/2012	Howard
2012/0068903	A1	3/2012	Thevenard et al.
2012/0077485	A1	3/2012	Shin et al.
2012/0078452	A1	3/2012	Daum et al.
2012/0084807	A1	4/2012	Thompson et al.
2012/0091820	A1	4/2012	Campanella et al.
2012/0092161	A1	4/2012	West et al.
2012/0093078	A1	4/2012	Perlman et al.
2012/0102568	A1	4/2012	Tarbotton et al.
2012/0105246	A1	5/2012	Sexton et al.
2012/0105637	A1	5/2012	Yousefi et al.
2012/0109545	A1	5/2012	Meynardi et al.
2012/0109566	A1	5/2012	Adamian et al.
2012/0117584	A1	5/2012	Gordon
2012/0129566	A1	5/2012	Lee et al.
2012/0133373	A1	5/2012	Ali et al.
2012/0137332	A1	5/2012	Kumar et al.
2012/0144420	A1	6/2012	Del Sordo et al.
2012/0146861	A1	6/2012	Armbrecht et al.
2012/0153087	A1	6/2012	Collette et al.
2012/0154239	A1	6/2012	Bar-Sade et al.
2012/0161543	A1	6/2012	Reuven et al.
2012/0176906	A1	7/2012	Hartenstein et al.
2012/0181258	A1	7/2012	Shan et al.
2012/0190386	A1	7/2012	Anderson
2012/0197558	A1	8/2012	Henig et al.
2012/0201145	A1	8/2012	Ree et al.
2012/0214538	A1	8/2012	Kim et al.
2012/0224807	A1	9/2012	Winzer et al.
2012/0226394	A1	9/2012	Marcus et al.
2012/0235864	A1	9/2012	Lu et al.
2012/0235881	A1	9/2012	Pan et al.
2012/0250534	A1	10/2012	Langer et al.
2012/0250752	A1	10/2012	McHann et al.
2012/0263152	A1	10/2012	Fischer et al.
2012/0267863	A1	10/2012	Kiest et al.
2012/0268340	A1	10/2012	Capozzoli et al.
2012/0270507	A1	10/2012	Qin et al.
2012/0272741	A1	11/2012	Xiao et al.
2012/0274528	A1	11/2012	McMahon et al.
2012/0287922	A1	11/2012	Heck et al.
2012/0299671	A1	11/2012	Ikeda et al.
2012/0304294	A1	11/2012	Fujiwara et al.
2012/0306587	A1	12/2012	Strid et al.
2012/0306708	A1	12/2012	Henderson et al.
2012/0313895	A1	12/2012	Haroun et al.
2012/0319903	A1	12/2012	Huseth et al.
2012/0322380	A1	12/2012	Nannarone et al.
2012/0322492	A1	12/2012	Koo et al.
2012/0324018	A1	12/2012	Metcalf et al.
2012/0327908	A1	12/2012	Gupta et al.
2012/0329523	A1	12/2012	Stewart et al.
2012/0330756	A1	12/2012	Morris et al.
2013/0002409	A1	1/2013	Molina et al.
2013/0003876	A1	1/2013	Bennett
2013/0010679	A1	1/2013	Ma et al.
2013/0015922	A1	1/2013	Liu et al.
2013/0016022	A1	1/2013	Heiks et al.
2013/0023302	A1	1/2013	Sivanesan et al.
2013/0039624	A1	2/2013	Scherer et al.
2013/0064178	A1	3/2013	Cs et al.
2013/0064311	A1	3/2013	Turner et al.
2013/0070621	A1	3/2013	Marzetta et al.
2013/0077612	A1	3/2013	Khorami et al.
2013/0077664	A1	3/2013	Lee et al.
2013/0080290	A1	3/2013	Kamm
2013/0086639	A1	4/2013	Sondhi et al.
2013/0093638	A1	4/2013	Shoemaker et al.
2013/0095875	A1	4/2013	Reuven et al.
2013/0108206	A1	5/2013	Sasaoka et al.
2013/0109317	A1*	5/2013	Kikuchi H04B 7/24 455/41.2
2013/0117852	A1	5/2013	Stute et al.
2013/0120548	A1	5/2013	Li et al.
2013/0122828	A1	5/2013	Choi et al.
2013/0124365	A1	5/2013	Pradeep
2013/0127678	A1	5/2013	Chandler et al.
2013/0136410	A1	5/2013	Sasaoka et al.
2013/0144750	A1	6/2013	Brown
2013/0148194	A1	6/2013	Altug et al.
2013/0159153	A1	6/2013	Lau et al.
2013/0159856	A1	6/2013	Ferren
2013/0160122	A1	6/2013	Choi et al.
2013/0162490	A1	6/2013	Blech et al.
2013/0166690	A1	6/2013	Shatzkamer et al.
2013/0169499	A1	7/2013	Lin et al.
2013/0173807	A1	7/2013	De Groot et al.
2013/0178998	A1	7/2013	Gadiraju et al.
2013/0182790	A1	7/2013	Jalali et al.
2013/0182804	A1	7/2013	Yutaka et al.
2013/0185552	A1	7/2013	Steer et al.
2013/0187636	A1	7/2013	Kast et al.
2013/0191052	A1	7/2013	Fernandez et al.
2013/0201006	A1	8/2013	Kummetz et al.
2013/0201904	A1	8/2013	Toskala et al.
2013/0205370	A1	8/2013	Kalgi et al.
2013/0207681	A1	8/2013	Slupsky et al.
2013/0207859	A1	8/2013	Legay et al.
2013/0219308	A1	8/2013	Britton et al.
2013/0230235	A1	9/2013	Tateno et al.
2013/0234904	A1	9/2013	Blech et al.
2013/0234961	A1	9/2013	Garfinkel et al.
2013/0235845	A1	9/2013	Kovvali et al.
2013/0235871	A1	9/2013	Brzozowski et al.
2013/0241726	A1	9/2013	Hunter et al.
2013/0262656	A1	10/2013	Cao et al.
2013/0262857	A1	10/2013	Neuman et al.
2013/0263263	A1	10/2013	Narkolayev et al.
2013/0265732	A1	10/2013	Herbsommer et al.
2013/0266026	A1	10/2013	McCormack et al.
2013/0268414	A1	10/2013	Lehtiniemi
2013/0271349	A1	10/2013	Wright et al.
2013/0278464	A1	10/2013	Xia et al.
2013/0279523	A1	10/2013	Denney et al.
2013/0279561	A1	10/2013	Jin et al.
2013/0279868	A1	10/2013	Zhang et al.
2013/0279914	A1	10/2013	Brooks et al.
2013/0285864	A1	10/2013	Clymer et al.
2013/0303089	A1	11/2013	Wang et al.
2013/0305369	A1	11/2013	Karta et al.
2013/0306351	A1	11/2013	Lambert et al.
2013/0307645	A1	11/2013	Mita et al.
2013/0311661	A1	11/2013	McPhee
2013/0314182	A1	11/2013	Takeda et al.
2013/0321225	A1	12/2013	Pettus et al.
2013/0326063	A1	12/2013	Burch et al.
2013/0326494	A1	12/2013	Nunez et al.
2013/0330050	A1	12/2013	Yang et al.
2013/0335165	A1	12/2013	Arnold et al.
2013/0336370	A1	12/2013	Jovanovic et al.
2013/0336418	A1	12/2013	Tomeba et al.
2013/0341094	A1	12/2013	Taherian et al.
2013/0342287	A1	12/2013	Randall et al.
2013/0343213	A1	12/2013	Reynolds et al.
2013/0343351	A1	12/2013	Sambhwani et al.
2014/0003394	A1	1/2014	Rubin et al.
2014/0003775	A1	1/2014	Ko et al.
2014/0007076	A1	1/2014	Kim et al.
2014/0009270	A1	1/2014	Yamazaki et al.
2014/0009822	A1	1/2014	Dong et al.
2014/0015705	A1	1/2014	Ebihara
2014/0019576	A1	1/2014	Lobo et al.
2014/0026170	A1	1/2014	Francisco et al.
2014/0028184	A1	1/2014	Voronin et al.
2014/0028190	A1	1/2014	Voronin et al.
2014/0028532	A1	1/2014	Ehrenberg et al.
2014/0032005	A1	1/2014	Iwamura
2014/0036694	A1	2/2014	Courtice et al.
2014/0041925	A1	2/2014	Siripurapu et al.

(56) **References Cited**

U.S. PATENT DOCUMENTS

2014/0043189 A1 2/2014 Lee et al.
2014/0043977 A1 2/2014 Wiley et al.
2014/0044139 A1 2/2014 Dong et al.
2014/0050212 A1 2/2014 Braz et al.
2014/0052810 A1 2/2014 Osorio et al.
2014/0056130 A1 2/2014 Grayson et al.
2014/0057576 A1 2/2014 Liu et al.
2014/0062784 A1 3/2014 Rison et al.
2014/0071818 A1 3/2014 Wang et al.
2014/0072064 A1 3/2014 Lemson et al.
2014/0072299 A1 3/2014 Stapleton et al.
2014/0077995 A1 3/2014 Artemenko et al.
2014/0086080 A1 3/2014 Hui et al.
2014/0086152 A1 3/2014 Bontu et al.
2014/0102743 A1 4/2014 Doneker et al.
2014/0112184 A1 4/2014 Chai
2014/0114635 A1 4/2014 Sato et al.
2014/0124236 A1 5/2014 Vu et al.
2014/0126914 A1 5/2014 Berlin et al.
2014/0130111 A1 5/2014 Nulty et al.
2014/0132728 A1 5/2014 Verano et al.
2014/0139375 A1 5/2014 Faragher et al.
2014/0143055 A1 5/2014 Johnson
2014/0146902 A1 5/2014 Liu et al.
2014/0148107 A1 5/2014 Maltsev et al.
2014/0155054 A1 6/2014 Henry et al.
2014/0165145 A1 6/2014 Baentsch et al.
2014/0169186 A1 6/2014 Zhu et al.
2014/0177692 A1 6/2014 Yu et al.
2014/0179302 A1 6/2014 Polehn et al.
2014/0189677 A1 7/2014 Curzi et al.
2014/0189732 A1 7/2014 Shkedi et al.
2014/0191913 A1 7/2014 Ge et al.
2014/0204000 A1 7/2014 Sato et al.
2014/0204754 A1 7/2014 Jeong et al.
2014/0207844 A1 7/2014 Mayo et al.
2014/0208272 A1 7/2014 Vats et al.
2014/0211883 A1 7/2014 Chai et al.
2014/0222997 A1 8/2014 Mermoud et al.
2014/0223527 A1 8/2014 Bortz et al.
2014/0225129 A1 8/2014 Inoue et al.
2014/0227905 A1 8/2014 Knott et al.
2014/0227966 A1 8/2014 Artemenko et al.
2014/0233900 A1 8/2014 Hugonnot et al.
2014/0241718 A1 8/2014 Jiang et al.
2014/0254516 A1 9/2014 Lee et al.
2014/0254896 A1 9/2014 Zhou et al.
2014/0254979 A1 9/2014 Zhang et al.
2014/0266946 A1 9/2014 Stevenson et al.
2014/0266953 A1 9/2014 Yen et al.
2014/0267700 A1 9/2014 Wang et al.
2014/0269260 A1 9/2014 Xue
2014/0269691 A1 9/2014 Xue et al.
2014/0269972 A1 9/2014 Rada et al.
2014/0273873 A1 9/2014 Huynh et al.
2014/0285277 A1 9/2014 Herbsommer et al.
2014/0285293 A1 9/2014 Schuppener et al.
2014/0285294 A1 9/2014 Haroun et al.
2014/0285373 A1 9/2014 Kuwahara et al.
2014/0285389 A1 9/2014 Fakharzadeh et al.
2014/0286189 A1 9/2014 Kang et al.
2014/0286235 A1 9/2014 Chang et al.
2014/0286284 A1 9/2014 Lim et al.
2014/0287702 A1 9/2014 Schuppener et al.
2014/0299349 A1 10/2014 Yamaguchi et al.
2014/0304498 A1 10/2014 Gonuguntla et al.
2014/0317229 A1 10/2014 Hughes et al.
2014/0320364 A1 10/2014 Gu et al.
2014/0321273 A1 10/2014 Morrill et al.
2014/0325594 A1 10/2014 Klein et al.
2014/0334773 A1 11/2014 Mathai et al.
2014/0334789 A1 11/2014 Matsuo et al.
2014/0340271 A1 11/2014 Petkov et al.
2014/0343883 A1 11/2014 Libby et al.
2014/0349696 A1 11/2014 Hyde et al.
2014/0351571 A1 11/2014 Jacobs
2014/0355525 A1 12/2014 Willis, III et al.
2014/0355989 A1 12/2014 Finkelstein
2014/0357269 A1 12/2014 Zhou et al.
2014/0359275 A1 12/2014 Murugesan et al.
2014/0362374 A1 12/2014 Santori
2014/0362694 A1 12/2014 Rodriques
2014/0368301 A1 12/2014 Herbsommer et al.
2014/0369430 A1 12/2014 Parnell et al.
2014/0372068 A1 12/2014 Seto et al.
2014/0373053 A1 12/2014 Leley et al.
2014/0376655 A1 12/2014 Ruan et al.
2015/0008996 A1 1/2015 Jessup et al.
2015/0009089 A1 1/2015 Pesa
2015/0016260 A1 1/2015 Chow et al.
2015/0017473 A1 1/2015 Verhoeven et al.
2015/0022399 A1 1/2015 Flannery et al.
2015/0026460 A1 1/2015 Walton
2015/0029065 A1 1/2015 Cheng
2015/0036610 A1 2/2015 Kim et al.
2015/0042526 A1 2/2015 Zeine
2015/0048238 A1 2/2015 Kawai
2015/0049998 A1 2/2015 Dumais
2015/0061859 A1 3/2015 Matsuoka et al.
2015/0065166 A1 3/2015 Ward et al.
2015/0070231 A1 3/2015 Park et al.
2015/0071594 A1 3/2015 Register
2015/0073594 A1 3/2015 Trujillo et al.
2015/0077740 A1 3/2015 Fuse
2015/0078756 A1 3/2015 Soto
2015/0084660 A1 3/2015 Knierim et al.
2015/0084703 A1 3/2015 Sanduleanu
2015/0084814 A1 3/2015 Rojanski et al.
2015/0091650 A1 4/2015 Nobbe
2015/0094104 A1 4/2015 Wilmhoff et al.
2015/0098387 A1 4/2015 Garg et al.
2015/0099555 A1 4/2015 Krishnaswamy et al.
2015/0102972 A1 4/2015 Scire-Scappuzzo et al.
2015/0103685 A1 4/2015 Butchko et al.
2015/0104005 A1 4/2015 Holman
2015/0105115 A1 4/2015 Hata et al.
2015/0109178 A1 4/2015 Hyde et al.
2015/0116154 A1 4/2015 Artemenko
2015/0122886 A1 5/2015 Koch
2015/0126107 A1 5/2015 Bennett et al.
2015/0130675 A1 5/2015 Parsche
2015/0138022 A1 5/2015 Takahashi
2015/0138144 A1 5/2015 Tanabe
2015/0153248 A1 6/2015 Hayward et al.
2015/0156266 A1 6/2015 Gupta
2015/0162988 A1 6/2015 Henry et al.
2015/0171517 A1 6/2015 Grandfield et al.
2015/0171522 A1 6/2015 Liu et al.
2015/0172036 A1 6/2015 Katar et al.
2015/0181449 A1 6/2015 Didenko et al.
2015/0185425 A1 7/2015 Gundel et al.
2015/0195349 A1 7/2015 Cardamore
2015/0195719 A1 7/2015 Rahman
2015/0201228 A1 7/2015 Hasek
2015/0207527 A1 7/2015 Eliaz et al.
2015/0214615 A1 7/2015 Patel et al.
2015/0215268 A1 7/2015 Dinha
2015/0223078 A1 8/2015 Bennett et al.
2015/0223113 A1 8/2015 Matsunaga
2015/0223160 A1 8/2015 Ho
2015/0230109 A1 8/2015 Turner et al.
2015/0234122 A1 8/2015 Andle
2015/0236778 A1 8/2015 Jalali
2015/0236779 A1 8/2015 Jalali
2015/0237519 A1 8/2015 Ghai
2015/0249965 A1 9/2015 Dussmann et al.
2015/0263424 A1 9/2015 Sanford
2015/0266436 A1 9/2015 Erb
2015/0271830 A1 9/2015 Shin et al.
2015/0276577 A1 10/2015 Ruege et al.
2015/0277569 A1 10/2015 Sprenger
2015/0280328 A1 10/2015 Sanford et al.
2015/0284079 A1 10/2015 Matsuda
2015/0288532 A1 10/2015 Veyseh et al.

(56) **References Cited**

U.S. PATENT DOCUMENTS

2015/0289247 A1 10/2015 Liu et al.
2015/0303892 A1 10/2015 Desclos
2015/0304045 A1 10/2015 Henry et al.
2015/0304869 A1 10/2015 Johnson et al.
2015/0311951 A1 10/2015 Hariz
2015/0312774 A1 10/2015 Lau
2015/0318610 A1 11/2015 Lee et al.
2015/0323948 A1 11/2015 Jeong
2015/0325913 A1 11/2015 Vagman
2015/0326274 A1 11/2015 Flood
2015/0326287 A1 11/2015 Kazmi et al.
2015/0333386 A1 11/2015 Kaneda et al.
2015/0333804 A1 11/2015 Yang et al.
2015/0334769 A1 11/2015 Kim et al.
2015/0339912 A1 11/2015 Farrand et al.
2015/0344136 A1 12/2015 Dahlstrom
2015/0349415 A1 12/2015 Iwanaka
2015/0356482 A1 12/2015 Whipple et al.
2015/0356848 A1 12/2015 Hatch
2015/0369660 A1 12/2015 Yu
2015/0370251 A1 12/2015 Siegel et al.
2015/0373557 A1 12/2015 Bennett et al.
2015/0380814 A1 12/2015 Boutayeb et al.
2015/0382208 A1 12/2015 Elliott et al.
2015/0382363 A1 12/2015 Wang et al.
2016/0006129 A1 1/2016 Haziza
2016/0012460 A1 1/2016 Kruglick
2016/0014749 A1 1/2016 Kang et al.
2016/0021545 A1 1/2016 Shaw
2016/0026301 A1 1/2016 Zhou et al.
2016/0029009 A1 1/2016 Lu et al.
2016/0038074 A1 2/2016 Brown et al.
2016/0043478 A1 2/2016 Hartenstein
2016/0044705 A1 2/2016 Gao
2016/0050028 A1 2/2016 Henry et al.
2016/0056543 A1 2/2016 Kwiatkowski
2016/0063642 A1 3/2016 Luciani et al.
2016/0064794 A1 3/2016 Henry et al.
2016/0065252 A1 3/2016 Preschutti
2016/0065335 A1 3/2016 Koo et al.
2016/0066191 A1 3/2016 Li
2016/0068265 A1 3/2016 Hoareau et al.
2016/0068277 A1 3/2016 Manitta
2016/0069934 A1 3/2016 Saxby et al.
2016/0069935 A1 3/2016 Kreikebaum et al.
2016/0070265 A1 3/2016 Liu et al.
2016/0072173 A1 3/2016 Herbsommer et al.
2016/0072191 A1 3/2016 Iwai
2016/0072287 A1 3/2016 Jia
2016/0079769 A1 3/2016 Corum et al.
2016/0079771 A1 3/2016 Corum
2016/0079809 A1 3/2016 Corum et al.
2016/0080035 A1 3/2016 Fuchs et al.
2016/0080839 A1 3/2016 Fuchs et al.
2016/0082460 A1 3/2016 McMaster et al.
2016/0087344 A1 3/2016 Artemenko et al.
2016/0088498 A1 3/2016 Sharawi
2016/0094420 A1 3/2016 Clemm et al.
2016/0094879 A1 3/2016 Gerszberg et al.
2016/0099749 A1 4/2016 Bennett et al.
2016/0100324 A1 4/2016 Henry et al.
2016/0103199 A1 4/2016 Rappaport
2016/0105218 A1 4/2016 Henry et al.
2016/0105233 A1 4/2016 Jalali
2016/0105239 A1 4/2016 Henry et al.
2016/0105255 A1 4/2016 Henry et al.
2016/0111890 A1 4/2016 Corum et al.
2016/0112092 A1 4/2016 Henry et al.
2016/0112093 A1 4/2016 Barzegar et al.
2016/0112094 A1 4/2016 Stuckman et al.
2016/0112115 A1 4/2016 Henry et al.
2016/0112132 A1 4/2016 Henry et al.
2016/0112133 A1 4/2016 Henry et al.
2016/0112135 A1 4/2016 Henry et al.
2016/0112263 A1 4/2016 Henry et al.
2016/0116914 A1 4/2016 Mucci
2016/0118717 A1 4/2016 Britz et al.
2016/0124071 A1 5/2016 Baxley et al.
2016/0127931 A1 5/2016 Baxley et al.
2016/0131347 A1 5/2016 Hill et al.
2016/0134006 A1 5/2016 Ness et al.
2016/0135132 A1 5/2016 Donepudi et al.
2016/0135184 A1 5/2016 Zavadsky et al.
2016/0137311 A1 5/2016 Peverill et al.
2016/0139731 A1 5/2016 Kim
2016/0149312 A1 5/2016 Henry et al.
2016/0149614 A1 5/2016 Barzegar
2016/0149636 A1 5/2016 Gerszberg et al.
2016/0149665 A1 5/2016 Henry et al.
2016/0149731 A1 5/2016 Henry et al.
2016/0149753 A1 5/2016 Gerszberg et al.
2016/0150427 A1 5/2016 Ramanath
2016/0153938 A1 6/2016 Balasubramaniam et al.
2016/0164571 A1 6/2016 Bennett et al.
2016/0164573 A1 6/2016 Birk et al.
2016/0165472 A1 6/2016 Gopalakrishnan et al.
2016/0165478 A1 6/2016 Yao et al.
2016/0174040 A1 6/2016 Roberts et al.
2016/0179134 A1 6/2016 Ryu
2016/0181701 A1 6/2016 Sangaran et al.
2016/0182161 A1 6/2016 Barzegar
2016/0182981 A1 6/2016 Minarik et al.
2016/0188291 A1 6/2016 Vilermo et al.
2016/0189101 A1 6/2016 Kantor et al.
2016/0197392 A1 7/2016 Henry et al.
2016/0197409 A1 7/2016 Henry et al.
2016/0197630 A1 7/2016 Kawasaki
2016/0197642 A1 7/2016 Henry et al.
2016/0207627 A1 7/2016 Hoareau et al.
2016/0211566 A1 7/2016 Kikuchi et al.
2016/0212065 A1 7/2016 To et al.
2016/0212641 A1 7/2016 Kong et al.
2016/0214717 A1 7/2016 De Silva
2016/0218407 A1 7/2016 Henry et al.
2016/0218437 A1 7/2016 Guntupalli
2016/0221039 A1 8/2016 Fuchs et al.
2016/0224235 A1 8/2016 Forsstrom
2016/0226681 A1 8/2016 Henry et al.
2016/0244165 A1 8/2016 Patrick et al.
2016/0248149 A1 8/2016 Kim et al.
2016/0248165 A1 8/2016 Henry
2016/0248509 A1 8/2016 Henry
2016/0249233 A1 8/2016 Murray
2016/0252970 A1 9/2016 Dahl
2016/0261309 A1 9/2016 Henry
2016/0261310 A1 9/2016 Fuchs et al.
2016/0261312 A1 9/2016 Fuchs et al.
2016/0269156 A1 9/2016 Barzegar et al.
2016/0276725 A1 9/2016 Barnickel et al.
2016/0277939 A1 9/2016 Olcott et al.
2016/0285508 A1 9/2016 Bennett et al.
2016/0285512 A1 9/2016 Henry et al.
2016/0294444 A1 10/2016 Gerszberg et al.
2016/0294517 A1 10/2016 Barzegar et al.
2016/0295431 A1 10/2016 Henry et al.
2016/0306361 A1 10/2016 Shalom et al.
2016/0315659 A1 10/2016 Henry
2016/0315660 A1 10/2016 Henry
2016/0315661 A1 10/2016 Henry
2016/0315662 A1 10/2016 Henry
2016/0322691 A1 11/2016 Bennett et al.
2016/0329957 A1 11/2016 Schmid et al.
2016/0336091 A1 11/2016 Henry et al.
2016/0336092 A1 11/2016 Henry et al.
2016/0336636 A1 11/2016 Henry et al.
2016/0336996 A1 11/2016 Henry
2016/0336997 A1 11/2016 Henry
2016/0351987 A1 12/2016 Henry
2016/0359523 A1 12/2016 Bennett
2016/0359524 A1 12/2016 Bennett et al.
2016/0359529 A1 12/2016 Bennett et al.
2016/0359530 A1 12/2016 Bennett
2016/0359541 A1 12/2016 Bennett
2016/0359542 A1 12/2016 Bennett

(56) **References Cited**

U.S. PATENT DOCUMENTS

2016/0359543	A1	12/2016	Bennett et al.
2016/0359544	A1	12/2016	Bennett
2016/0359546	A1	12/2016	Bennett
2016/0359547	A1	12/2016	Bennett et al.
2016/0359649	A1	12/2016	Bennett et al.
2016/0360511	A1	12/2016	Barzegar
2016/0360533	A1	12/2016	Bennett et al.
2016/0365175	A1	12/2016	Bennett et al.
2016/0365893	A1	12/2016	Bennett et al.
2016/0365894	A1	12/2016	Bennett et al.
2016/0365897	A1	12/2016	Gross
2016/0365916	A1	12/2016	Bennett et al.
2016/0365943	A1	12/2016	Henry et al.
2016/0365966	A1	12/2016	Bennett et al.
2016/0366586	A1	12/2016	Gross et al.
2016/0366587	A1	12/2016	Gross
2016/0373164	A1	12/2016	Kawasaki et al.
2016/0373937	A1	12/2016	Bennett et al.
2016/0380327	A1	12/2016	Henry
2016/0380328	A1	12/2016	Henry
2016/0380358	A1	12/2016	Henry
2016/0380701	A1	12/2016	Henry et al.
2016/0380702	A1	12/2016	Henry et al.
2017/0018174	A1	1/2017	Gerszberg
2017/0018332	A1	1/2017	Barzegar et al.
2017/0018830	A1	1/2017	Henry et al.
2017/0018831	A1	1/2017	Henry et al.
2017/0018832	A1	1/2017	Henry et al.
2017/0018833	A1	1/2017	Henry et al.
2017/0018851	A1	1/2017	Hnery et al.
2017/0018852	A1	1/2017	Adriazola et al.
2017/0018856	A1	1/2017	Henry
2017/0019130	A1	1/2017	Henry et al.
2017/0019131	A1	1/2017	Henry et al.
2017/0019150	A1	1/2017	Henry
2017/0019189	A1	1/2017	Henry et al.
2017/0025728	A1	1/2017	Henry et al.
2017/0025732	A1	1/2017	Henry et al.
2017/0025734	A1	1/2017	Henry et al.
2017/0025839	A1	1/2017	Henry et al.
2017/0026063	A1	1/2017	Henry
2017/0026082	A1	1/2017	Henry et al.
2017/0026084	A1	1/2017	Henry et al.
2017/0026129	A1	1/2017	Henry
2017/0033464	A1	2/2017	Henry et al.
2017/0033465	A1	2/2017	Henry et al.
2017/0033466	A1	2/2017	Henry et al.
2017/0033834	A1	2/2017	Gross
2017/0033953	A1	2/2017	Henry et al.
2017/0033954	A1	2/2017	Henry et al.
2017/0034042	A1	2/2017	Gross et al.
2017/0041081	A1	2/2017	Henry et al.
2017/0047662	A1	2/2017	Henry et al.
2017/0063430	A1	3/2017	Henry
2017/0064715	A1	3/2017	Barzegar
2017/0069944	A1	3/2017	Henry
2017/0075677	A1	3/2017	Gross et al.
2017/0077998	A1	3/2017	Gerszberg et al.
2017/0078063	A1	3/2017	Gerszberg
2017/0078064	A1	3/2017	Gerszberg et al.
2017/0079024	A1	3/2017	Gerszberg
2017/0079036	A1	3/2017	Gerszberg
2017/0079037	A1	3/2017	Gerszberg et al.
2017/0079038	A1	3/2017	Gerszberg et al.
2017/0079039	A1	3/2017	Gerszberg et al.
2017/0085003	A1	3/2017	Johnson et al.
2017/0085295	A1	3/2017	Stuckman
2017/0085336	A1	3/2017	Henry
2017/0093693	A1	3/2017	Barzegar et al.
2017/0093807	A1	3/2017	Gross et al.
2017/0098881	A1	4/2017	Barnickel et al.
2017/0098884	A1	4/2017	Barnickel et al.
2017/0098889	A1	4/2017	Henry
2017/0099079	A1	4/2017	Gross
2017/0110795	A1	4/2017	Henry
2017/0110804	A1	4/2017	Henry et al.
2017/0111805	A1	4/2017	Barzegar et al.
2017/0117937	A1	4/2017	Henry
2017/0117938	A1	4/2017	Henry
2017/0117939	A1	4/2017	Gerszberg et al.
2017/0117941	A1	4/2017	Gerszberg et al.
2017/0127290	A1	5/2017	Uelk et al.
2017/0141856	A1	5/2017	Barzegar
2017/0149489	A1	5/2017	Bennett
2017/0163526	A1	6/2017	Henry
2017/0179563	A1	6/2017	Henry et al.
2017/0179608	A1	6/2017	Henry et al.
2017/0179609	A1	6/2017	Henry
2017/0180801	A1	6/2017	Gerszberg et al.

FOREIGN PATENT DOCUMENTS

AU	606303	B2	1/1991
AU	7261000	A	4/2001
AU	760272	B2	5/2003
AU	2005227368	B2	2/2009
AU	2010101079	A4	11/2010
AU	2007215252	B2	1/2011
AU	201400748		3/2014
AU	2014200748	A1	3/2014
CA	1136267	A1	11/1982
CA	1211813	A1	9/1986
CA	1328009	C	3/1994
CA	2260380	C	12/2000
CA	2449596	A1	6/2005
CA	2515560	A1	2/2007
CA	2664573	A1	4/2008
CA	2467988	C	11/2010
CA	2777147	A1	4/2011
CA	2814529	A1	4/2012
CA	2787580	A1	2/2013
CA	2927054	A1	5/2015
CA	2940976		9/2015
CN	2116969	U	9/1992
CN	1155354	C	7/1997
CN	1411563	A	4/2003
CN	1126425	C	10/2003
CN	2730033	Y	9/2005
CN	1833397	A	9/2006
CN	1885736	A	12/2006
CN	201048157	Y	4/2008
CN	201146495	Y	11/2008
CN	201207179	Y	3/2009
CN	100502181	C	6/2009
CN	201282193	Y	7/2009
CN	101834011	U	4/2010
CN	1823275	B	5/2010
CN	101785201	A	7/2010
CN	1820482	B	12/2010
CN	101075702	B	2/2011
CN	101978613	A	2/2011
CN	102130698	A	7/2011
CN	102136634	A	7/2011
CN	201985870	U	9/2011
CN	102208716	A	10/2011
CN	102280704	A	12/2011
CN	102280709	A	12/2011
CN	202093126	U	12/2011
CN	102351415	A	2/2012
CN	102396111	A	3/2012
CN	202253536	U	5/2012
CN	102544736	A	7/2012
CN	102590893	A	7/2012
CN	102694351	A	9/2012
CN	202424729	U	9/2012
CN	101662076	B	11/2012
CN	102017692	B	4/2013
CN	103078673	A	5/2013
CN	103117118	A	5/2013
CN	103163881	A	6/2013
CN	203204743	U	9/2013
CN	1863244	B	10/2013
CN	101958461	B	11/2013
CN	103700442		4/2014

(56) **References Cited**

FOREIGN PATENT DOCUMENTS

CN	103700442	A	4/2014
CN	103943925	A	7/2014
CN	104052742	A	9/2014
CN	104064844	A	9/2014
CN	203813973	U	9/2014
CN	104091987	A	10/2014
CN	104092028	A	10/2014
CN	203931626	U	11/2014
CN	203950607	U	11/2014
CN	104181552	A	12/2014
CN	204538183		8/2015
CN	102412442	B	10/2015
CN	204760545	U	11/2015
CN	105262551	A	1/2016
CN	205265924		1/2016
CN	105359572	A	2/2016
CN	105453340		3/2016
CN	105594138	A	5/2016
CN	104162995	B	6/2016
CN	105813193	A	7/2016
DE	3504546	A1	8/1986
DE	3533204	A1	3/1987
DE	3533211	A1	3/1987
DE	3827956	A1	3/1989
DE	4027367	C1	7/1991
DE	4225595	C1	9/1993
DE	19501448	A1	7/1996
DE	19939832	A1	2/2001
DE	10043761	C2	11/2002
DE	102004024356	A1	9/2005
DE	69732676	T2	4/2006
DE	4337835	B4	5/2008
DE	102007049914	A1	4/2009
DE	102012004998	A1	7/2013
DE	102012203816	A1	9/2013
EP	0102846		3/1984
EP	0110478		6/1984
EP	0136818		4/1985
EP	0280379		8/1988
EP	0330303		8/1989
EP	0331248		9/1989
EP	0342149		11/1989
EP	0391719		4/1990
EP	425979	A2	5/1991
EP	0485467		5/1992
EP	272785	B1	2/1994
EP	0651487		10/1994
EP	0371660		4/1996
EP	0756392		1/1997
EP	834722	A2	4/1998
EP	0840464		5/1998
EP	0871241	B1	10/1998
EP	0890132		1/1999
EP	755092	A3	4/1999
EP	0896380		10/1999
EP	676648	B1	5/2000
EP	1085599	A2	3/2001
EP	0907983	B1	6/2001
EP	0756786		8/2001
EP	1127283	A1	8/2001
EP	1129550	A	9/2001
EP	1184930	A1	3/2002
EP	1195847	A2	4/2002
EP	1237303	A2	9/2002
EP	1296146	A1	3/2003
EP	0772061		7/2003
EP	1346431	A1	9/2003
EP	1249056	B1	1/2004
EP	1376755	A1	1/2004
EP	1401048	A1	3/2004
EP	1454422	A1	9/2004
EP	1488397	A1	12/2004
EP	1509970		3/2005
EP	1371108	B1	6/2005
EP	1550327	A2	7/2005
EP	1341255	B8	8/2005
EP	1577687	A1	9/2005
EP	1312135	B1	11/2005
EP	1624685	A2	2/2006
EP	1642468	A2	4/2006
EP	1647072	A1	4/2006
EP	1608110	B1	10/2006
EP	1793508	A1	6/2007
EP	1842265	A1	10/2007
EP	1898532	A2	3/2008
EP	1930982	A1	6/2008
EP	1953940	A1	8/2008
EP	1696509	B1	10/2009
EP	2159749	A1	3/2010
EP	2165550	A1	3/2010
EP	1166599	B1	5/2010
EP	1807950	A4	1/2011
EP	2404347	A2	1/2012
EP	2472671	A1	7/2012
EP	1817855	B1	1/2013
EP	2568528	A2	3/2013
EP	2302735	B1	9/2013
EP	2472737	B1	9/2013
EP	2640115	A1	9/2013
EP	2016643	B1	7/2014
EP	2760081	A1	7/2014
EP	2804259	A1	11/2014
EP	2507939	B1	12/2014
EP	2680452	B1	1/2015
EP	2838155	A1	2/2015
EP	2846480	A1	3/2015
EP	2849524	A1	3/2015
EP	2850695	A1	3/2015
EP	2853902	A1	4/2015
EP	2854361	A1	4/2015
EP	2870802	A1	5/2015
EP	2710400	A4	6/2015
EP	3076482	A1	10/2016
FR	2119804	A1	8/1972
FR	2214161	A1	8/1974
FR	2416562	A1	8/1979
FR	2583226	A1	12/1986
FR	2691602	A1	11/1993
FR	2849728	A1	7/2004
FR	2841387	B1	4/2006
FR	2893717	A1	5/2007
FR	2946466	B1	3/2012
FR	2986376	B1	10/2014
FR	3034203		9/2016
GB	175489	A	2/1922
GB	462804	A	3/1937
GB	529290	A	11/1940
GB	603119	A	10/1945
GB	589603	A	6/1947
GB	640181	A	7/1950
GB	663166	A	12/1951
GB	667290	A	2/1952
GB	668827	A	3/1952
GB	682115	A	11/1952
GB	682817	A	11/1952
GB	731473	A	6/1955
GB	746111	A	3/1956
GB	751153	A	6/1956
GB	767506	A	2/1957
GB	835976	A	6/1960
GB	845492	A	8/1960
GB	859951	A	1/1961
GB	889856	A	2/1962
GB	905417	A	9/1962
GB	993561	A	5/1965
GB	1004318	A	9/1965
GB	1076772	A	7/1967
GB	1141390	A	1/1969
GB	1298387	A	11/1972
GB	1383549	A	2/1974
GB	1370669	A	10/1974
GB	1422956	A	1/1976
GB	1424351	A	2/1976
GB	1468310	A	3/1977

(56) **References Cited**

FOREIGN PATENT DOCUMENTS

GB	1469840	A	4/1977
GB	1527228	A	10/1978
GB	2010528	A	6/1979
GB	2045055	A	10/1980
GB	1580627	A	12/1980
GB	1584193	A	2/1981
GB	2227369	A	7/1990
GB	2247990	A	3/1992
GB	2368468	A	5/2002
GB	2362472	B	10/2003
GB	2393370	A	3/2004
GB	2394364	B	6/2005
GB	2414862	A	12/2005
GB	2411554	B	1/2006
GB	705192		4/2007
GB	714974		9/2007
GB	718597		10/2007
GB	2474037	A	4/2011
GB	2476787	A	7/2011
GB	2474605	B	9/2011
GB	2485355	A	5/2012
GB	2481715	B	1/2014
GB	2507269	A	4/2014
GB	2476149	B	7/2014
GB	2532207	A	5/2016
IN	261253	A1	6/2014
IN	7352/CHENP/2015	A	7/2016
IN	201647015348	A	8/2016
JP	S50109642		9/1975
JP	55124303	U	9/1980
JP	55138902	U	10/1980
JP	574601		1/1982
JP	61178682	U	11/1986
JP	61260702	A	11/1986
JP	62110303	U	7/1987
JP	62190903	U	8/1987
JP	02214307	A	8/1990
JP	03167906	A	7/1991
JP	0653894		8/1991
JP	04369905	A	12/1992
JP	3001844	U	9/1994
JP	077769		1/1995
JP	7212126		11/1995
JP	0829545		2/1996
JP	08167810	A	6/1996
JP	08196022	A	7/1996
JP	08316918	A	11/1996
JP	2595339	B2	4/1997
JP	2639531	B2	8/1997
JP	10206183	A	8/1998
JP	10271071	A	10/1998
JP	116928	A	1/1999
JP	1114749	A	1/1999
JP	11239085	A	8/1999
JP	11313022	A	11/1999
JP	2000077889	A	3/2000
JP	2000216623	A	8/2000
JP	2000244238	A	9/2000
JP	2001217634	A	8/2001
JP	2002029247	A	1/2002
JP	2002111579	A	4/2002
JP	2002236174	A	8/2002
JP	200328219	A	1/2003
JP	2003008336	A	1/2003
JP	2003057464	A	2/2003
JP	2003511677	A	3/2003
JP	3411428	B2	6/2003
JP	2003324309	A	11/2003
JP	3480153	B2	12/2003
JP	2003344883	A	12/2003
JP	2004521379	A	7/2004
JP	2004253853	A	9/2004
JP	2004274656	A	9/2004
JP	2004297107	A	10/2004
JP	2004304659	A	10/2004
JP	2005503709	A	2/2005
JP	2005110231	A	4/2005
JP	2005182469	A	7/2005
JP	3734975	B2	1/2006
JP	2006153878	A	6/2006
JP	2006163886	A	6/2006
JP	2006166399	A	6/2006
JP	2007042009	A	2/2007
JP	2007072945	A	2/2007
JP	3938315	B2	6/2007
JP	2007174017	A	7/2007
JP	2007259001	A	10/2007
JP	4025674	B2	12/2007
JP	2008017263	A	1/2008
JP	2008021483	A	1/2008
JP	4072280	B2	4/2008
JP	4142062	B2	8/2008
JP	2008209965	A	9/2008
JP	2008218362	A	9/2008
JP	2009004986	A	1/2009
JP	4252573	B2	4/2009
JP	4259760	B2	4/2009
JP	2009124229	A	6/2009
JP	2010045471	A	2/2010
JP	2010192992	A	9/2010
JP	2010541468	A	12/2010
JP	2011160446	A	8/2011
JP	2012058162	A	3/2012
JP	2012090242	A	5/2012
JP	2012175680	A	9/2012
JP	2012205104	A	10/2012
JP	2012248035	A	12/2012
JP	2013046412	A	3/2013
JP	2013110503	A	6/2013
JP	5230779	B2	7/2013
JP	2014045237	A	3/2014
JP	5475475	B2	4/2014
JP	5497348	B2	5/2014
JP	5618072	B2	11/2014
JP	2015095520	A	5/2015
JP	2015188174		10/2015
KR	20000074034		12/2000
KR	20020091917		12/2002
KR	100624049	B1	9/2006
KR	200425873	Y1	9/2006
KR	100636388	B1	10/2006
KR	100725002	B1	6/2007
KR	100849702	B1	7/2008
KR	100916077	B1	8/2009
KR	100952976	B1	4/2010
KR	100989064	B1	10/2010
KR	101060584	B1	8/2011
KR	101070364	B1	9/2011
KR	101212354	B1	12/2012
KR	101259715	B1	4/2013
KR	101288770	B1	7/2013
KR	20140104097	A	8/2014
KR	101435538	B1	9/2014
KR	101447809	B1	10/2014
KR	20150087455		7/2015
KR	101549622		9/2015
KR	200479199	Y1	12/2015
KR	101586236	B1	1/2016
KR	101606803		1/2016
KR	101607420	B1	3/2016
NL	69072		1/1945
RU	2129746	C1	4/1999
RU	2432647	C1	10/2011
TW	201537432		10/2015
WO	8301711	A1	5/1983
WO	9116770	A1	10/1991
WO	9210014		6/1992
WO	9323928		11/1993
WO	9424467	A1	10/1994
WO	9523440	A1	8/1995
WO	9529537		11/1995
WO	9529537	A1	11/1995
WO	9603801	A1	2/1996
WO	9619089		6/1996

(56) **References Cited**

FOREIGN PATENT DOCUMENTS

WO	9639729	A1	12/1996
WO	9641157		12/1996
WO	9735387	A1	9/1997
WO	9737445	A1	10/1997
WO	9829853	A1	7/1998
WO	9857207		12/1998
WO	9859254	A1	12/1998
WO	9923848	A2	5/1999
WO	9945310		9/1999
WO	9948230	A1	9/1999
WO	9967903	A1	12/1999
WO	0070891	A1	11/2000
WO	00/74428	A1	12/2000
WO	WO0114985	A1	3/2001
WO	0128159	A2	4/2001
WO	0131746	A1	5/2001
WO	0145206	A1	6/2001
WO	0192910	A2	12/2001
WO	02061467	A2	8/2002
WO	02061971	A1	8/2002
WO	03/005629		1/2003
WO	03009083		1/2003
WO	03012614	A1	2/2003
WO	03026166		3/2003
WO	03026462	A1	4/2003
WO	03044981	A1	5/2003
WO	03088418		10/2003
WO	03099740	A1	12/2003
WO	2004011995	A1	2/2004
WO	2004038891	A2	5/2004
WO	2004/051804		6/2004
WO	2004051804	A1	6/2004
WO	2004054159	A2	6/2004
WO	2004077746	A1	9/2004
WO	2005015686	A1	2/2005
WO	2005072469	A2	8/2005
WO	2006012610	A2	2/2006
WO	2006061865	A1	6/2006
WO	2006085804	A1	8/2006
WO	2006102419	A2	9/2006
WO	2006111809	A1	10/2006
WO	2006116396	A2	11/2006
WO	2006122041	A2	11/2006
WO	2006125279	A1	11/2006
WO	2007000777	B1	2/2007
WO	2006050331	A3	3/2007
WO	2007031435	A1	3/2007
WO	2007071797	A1	6/2007
WO	2007148097	A2	12/2007
WO	2008003939	A1	1/2008
WO	2007094944	A3	3/2008
WO	2007149746	A3	4/2008
WO	2008044062	A1	4/2008
WO	2008055084	A2	5/2008
WO	2008061107	A2	5/2008
WO	2008069358	A1	6/2008
WO	2008070957	A1	6/2008
WO	2008102987	A1	8/2008
WO	2008117973	A1	10/2008
WO	2008155769	A2	12/2008
WO	2009014704	A1	1/2009
WO	2007098061	A3	2/2009
WO	2009031794	A1	3/2009
WO	2009035285	A2	3/2009
WO	2009090602	A1	7/2009
WO	2009123404	A4	10/2009
WO	2009131316	A2	10/2009
WO	2010017549	A1	2/2010
WO	2010050892	A1	5/2010
WO	2010147806	A1	12/2010
WO	2011006210	A1	1/2011
WO	2011032605	A1	3/2011
WO	2011085650	A1	7/2011
WO	2011137793	A1	11/2011
WO	2012/007831		1/2012
WO	2012038816	A1	3/2012
WO	2012050069	A1	4/2012
WO	2012064333	A1	5/2012
WO	2012113219	A1	8/2012
WO	2012171205	A1	12/2012
WO	2012172565	A1	12/2012
WO	2013013162	A2	1/2013
WO	2013013465	A1	1/2013
WO	2013017822		2/2013
WO	2013023226	A1	2/2013
WO	2013028197	A1	2/2013
WO	2013035110	A2	3/2013
WO	2013/073548		5/2013
WO	2013073548	A1	5/2013
WO	2013100912	A1	7/2013
WO	2013112353	A1	8/2013
WO	2013115802	A1	8/2013
WO	2013121682	A1	8/2013
WO	2013123445	A1	8/2013
WO	2013/138627		9/2013
WO	2013136213	A1	9/2013
WO	2013138627	A1	9/2013
WO	2013157978	A1	10/2013
WO	2013172502	A1	11/2013
WO	2014/018434		1/2014
WO	2014011438	A1	1/2014
WO	2014018434	A2	1/2014
WO	2014/045236		3/2014
WO	2014065952	A1	5/2014
WO	2014069941	A1	5/2014
WO	2014083500	A1	6/2014
WO	2014092644	A1	6/2014
WO	2014094559	A1	6/2014
WO	2014096868	A1	6/2014
WO	2014099340	A2	6/2014
WO	2013076499	A3	7/2014
WO	2014112994	A1	7/2014
WO	2014128253	A1	8/2014
WO	2014137546	A1	9/2014
WO	2014145862	A2	9/2014
WO	2014147002	A1	9/2014
WO	2014197926	A1	12/2014
WO	2015002658	A1	1/2015
WO	2015006636	A1	1/2015
WO	2015008442	A1	1/2015
WO	2015024006	A1	2/2015
WO	2015027033	A1	2/2015
WO	2015035463	A1	3/2015
WO	2015/055230		4/2015
WO	2015052478		4/2015
WO	2015052480		4/2015
WO	2015069090	A1	5/2015
WO	2015069431	A2	5/2015
WO	2015077644		5/2015
WO	2015088650	A1	6/2015
WO	2015120626		8/2015
WO	2015123623	A1	8/2015
WO	2015132618	A1	9/2015
WO	2015167566	A1	11/2015
WO	2015175054	A2	11/2015
WO	2015197580	A1	12/2015
WO	2016003291	A1	1/2016
WO	2016004003		1/2016
WO	2016009402	A2	1/2016
WO	2016012889		1/2016
WO	2016027007	A1	2/2016
WO	2016028767		2/2016
WO	2016/043949		3/2016
WO	2016032592	A1	3/2016
WO	2016036951	A1	3/2016
WO	2016043949	A1	3/2016
WO	2016048214	A1	3/2016
WO	2016048257	A1	3/2016
WO	2016/064502		4/2016
WO	2016053572	A1	4/2016
WO	2016053573	A1	4/2016
WO	2016060761	A1	4/2016
WO	2016060762	A1	4/2016
WO	2016061021	A1	4/2016

(56) **References Cited**

FOREIGN PATENT DOCUMENTS

WO	2016064502	A1	4/2016
WO	2016064505	A1	4/2016
WO	2016064516	A1	4/2016
WO	2016064700	A2	4/2016
WO	2016073072	A1	5/2016
WO	2016081125		5/2016
WO	2016081128		5/2016
WO	2016081129	A1	5/2016
WO	2016081134		5/2016
WO	2016081136		5/2016
WO	2015090382		6/2016
WO	2016086306	A1	6/2016
WO	2016089491		6/2016
WO	2016089492	A1	6/2016
WO	2016096029	A1	6/2016
WO	2016/125161		8/2016
WO	2016/133509		8/2016
WO	2016122409	A1	8/2016
WO	2016133672	A	8/2016
WO	2016/137982		9/2016
WO	2016145411		9/2016
WO	2016161637	A1	10/2016
WO	2016169058	A1	10/2016
WO	2016171907		10/2016
WO	2016176030		11/2016
WO	2016200492		12/2016
WO	2016200579		12/2016
WO	2017/011099		1/2017
WO	2017011100		1/2017
WO	2017011101		1/2017
WO	2017011102		1/2017
WO	2017011103		1/2017
WO	2017011227		1/2017
WO	2017014840		1/2017
WO	2017014842		1/2017
WO	2017023412		2/2017
WO	2017023413		2/2017
WO	2017023417		2/2017
WO	2017/048417		3/2017
WO	2017058468		4/2017
WO	2017058477		4/2017
WO	2017065898		4/2017

OTHER PUBLICATIONS

PCT/US16/027397 International Search Report & Written Opinion dated Jun. 24, 2016.
PCT/US16/027398 International Search Report and Written Opinion dated Jun. 24, 2016.
PCT/US16/027403 Internatioanl Search Report & Written Opinion dated Jun. 22, 2016.
PCT/US16/028395 International Search Report and Written Opinion dated Jun. 29, 2016.
PCT/US16/032441 International Search Report and Written Opinion dated Jul. 29, 2016.
PCT/US2016/036285 International Search Report and Written Opinion dated Aug. 23, 2016.
PCT/US2016/036290 International Search Report & Written Opinion dated Aug. 11, 2016.
"Cband & L/Sband Telemetry Horn Antennas," mWAVE, mwavellc.com, http://www.mwavellc.com/custom -Band-LS--BandTelemetryHornAntennas. php, Jul. 6, 2012.
"Product Abstract—Program on Technology Innovation: Study on the Integration of High Temperature Superconducting DC Cables Within the Eastern and West urn North American Power Grids." EPRI—Electronic Power Research Institute, epri.com, Product ID:10203, Nov. 25, 2009.
"Boost: The world's first WI-FI extending led bulb," Sengled, sengled.com, http://www.sengled.com/sites/default/files/field/product/downloads/manual/a01-a60__na__user__manual.pdf, Dec. 2014.
"Examples of Cell Antennas," RF Check®, rfcheck.com, https://web.archive.org/web/20100201214318/http://www.rfcheck.com/Examplesof-Cell-Antennas.php, Feb. 1, 2010.
"Flashing Light : IR.Lamp," Beninca®, beninca.com, http://www.beninca.com/en/news/2015/02/23/lampeggiante-irlamp.html, Feb. 23, 2015.
"An Improved Solid Dielectric Lens Impulse Radiating Antenna," SBIR/STTR, DoD, sbir.gov., 2004.
"Power line communications: An overview Part I." King Fahd University of Petroleum and Minerals, Dhahran, KSA., 2008.
"Power Line Communications," Atmel®, atmel.com http://www.atmel.com/products/smartenergy/powerlinecommunications/default.aspx., 2015.
"Integrated Radio Masts Fully camouflaged Outdoor-Wi-Fi APs in GRP-lamp poles," Brown-iposs, brown-iposs.com., Mar. 21, 2014.
"How is ELine Different?," ELine Corridor Systems, corridor.biz http://www.corridor.biz/ELine__is__different.html., Apr. 23, 2015.
"Powerline Communication," Cypress Perform, cypress.com http://www.cypress.com/?id=2330., Apr. 23, 2015.
"Products: GSM Mircro Repeater." L-TEL: Quanzhou L-Tel Communication Equipment Co., Ltd., l-tel.com., Apr. 24, 2015.
"New Wi-Fi antenna enhances wireless coverage," ScienceDaily®, sciencedaily.com., Apr. 29, 2015.
"Dielectric Antenna," Microwave Technologies, Ind., microwavetechnologiesinc.co.in http://www.microwavetechnologiesinc.co.in/microwavecommunicationlabproducts. html#dielectricantenna,, May 21, 2015.
"Horn Antennas," Steatite QPar Antennas, steatiteqparantennas.co.uk, http://www.steatiteqparantennas.co.uk/products hornantennas.html? http://www.steatiteqparantennas. co.uk/consultancy/customhornantennas/., May 21, 2015.
"24 Volt D.C Flashing Light With Built-in Antenna 433Mhz, DEA+ Product Guide" Meteor electrical, meteorelectrical.com, Code: LUMY/24A., Jul. 28, 2010.
"Waveguide-fed Conical Horn," Antenna Magus, antennamagus.com, © 2015, accessed:, Aug. 2015.
"Identity Management," Tuomas Aura CSE-C3400 Information Security, Aalto University, 33 pgs., Autumn 2014.
"Power Communication," Communication Power Solutions, Inc., cpspower.biz, http://www.cpspower.biz/services/powercommunications/., Oct. 2013.
"7785-1167-WO International Search Report and Written Opinion", PCT/US2016/030964, dated Aug. 4, 2016.
"A Dielectric Lens Antenna with Enhanced Aperture Efficiency for Industrial Radar Applications", Computer Simulation Technology, cst.com, May 10, 2011.
"A New Approach to Outdoor DAS Network Physical Layer Using E-Line Technology", Corridor Systems, Mar. 2011, 5 pages.
"About Firelight Media Group", http://www. insu ra ncetechnologies.com/Products/Prod ucts__firelight__overview .s html, Firelight®. Insurance Technologies, LLC,, Apr. 19, 2015.
"Alternative Local Loop Technologies: A Review", Organisation for Economic Co-operation and Development, Paris, OCDE/GD(96)181, https://www.oecd.org/sti/2090965.pdf, 1996.
"Asahi Multi-Core Fiber Cable", Industrial Fiber optics, i-fiberoptics.com http://i-fiberoptics.com/m u lti-core-fi ber-ca ble. ph p, Apr. 26, 2015.
"Bi-Axial PA Horn with Gimbal Mount", Atlas Sound, MCM Electronics, mcmelectronics.com, MCM Part #555-13580., 2011.
"Broadband Negligible Loss Metamaterials", Computer Electmagnetics and Antennas Research Laboratory, cearl.ee.psu.edu., May 15, 2012.
"Broadband: Bringing Home the Bits: Chapter 4 Technology Options and Economic Factors", The National Academies Press, nap.edu, 2002.
"Cisco IP VSAT Satellite WAN Network Module for Cisco Integrated Services Routers", http://www.cisco.com/c/en/us/products/collateral/interfaces-modules/ip-vsatsatellite-wan-module/product__data__sheet0900aecd804bbf6f.html, Jul. 23, 2014.
"Cloud Management", Cisco Meraki, cisco.com., Sep. 11, 2015.
"Decryption: Identify & Control Encrypted Traffic", Palo Alto Networks, paloaltonetworks.com, Mar. 7, 2011.
"Delivering broadband over existing wiring", Cabling Installation & Maintenance, cablinginstall.com, May 1, 2002.
"Denso", Winn & Coales (Denso) Ltd. UK, denso.net, http://www.denso.net/voidfiller/voidpump.htm, 2015, 1 page.

(56) **References Cited**

OTHER PUBLICATIONS

"Detecting and Preventing MAC Spoofing", Detecting and Preventing MAC Spoofing | Network Access Control Solutions, infoexpress, 2014.
"Electronic Business Fulfillment FireLight®", Firelight Media Group LLC, firelightmedia.net http://www .firelightmedia .net/fmg/index.php/home, Apr. 19, 2015, 2 pages.
"Elliptical Polarization", "Elliptical Polarization" Wikipedia, <http://en.wikipedia.org/wiki/Elliptical_polarization>, 3 pgs., Apr. 21, 2015.
"Exacter Outage-Avoidance System", http://www.epri.com/abstracts/Pages/ProductAbstract.aspx?ProductId=0 00000000001020393, Nov. 30, 2009.
"GM-12 Gimbal Mount", Newmark System, Inc, newmarksystems.com., 2015.
"HiveManager Network Management System", Aerohive® Networks, aerohive.com., Sep. 2015.
"Home", Darktrace, darktrace.com, Jul. 10, 2014.
"How to Use STUF", STUF Page Link Info, crossdevices.com, http://www.crossdevices.com/cross_devices_010.htm, 2015, 1 page.
"IEEE Standard for Information technology—Local and metropolitan area networks—Specific requirements", Part 15.4: Wireless Medium Access Control (MAC) and Physical Layer (PHY) Specifications for Low Rate Wireless Personal Area Networks (WPANs), in IEEE Std 802.15.4, (Revision of IEEE Std 802.15.4-2003), Sep. 7, 2006, 1-320.
"Installing Satellite Accessories", ACE®, acehardware.com., May 8, 2006.
"International Preliminary Report on Patentability", PCT/US2014/039746, dated Dec. 10, 2015.
"International Preliminary Report on Patentability", PCT/US2014/060841, dated May 19, 2016, 8 pages.
"International Preliminary Report on Patentability & Written Opinion", PCT/US2014/061445, dated Jun. 23, 2016, 9 pages.
"International Search Report & Written Opinion", PCT/US2015/034827, dated Sep. 30, 2015.
"International Search Report & Written Opinion", PCT/US2015/056316, dated Jan. 21, 2016.
"International Search Report & Written Opinion", PCT/US2015/056320, dated Jan. 29, 2016.
"International Search Report & Written Opinion", PCT/US2015/056365, dated Jan. 22, 2016.
"International Search Report & Written Opinion", PCT/US2015/056368, dated Jan. 25, 2016.
"International Search Report & Written Opinion", PCT/US2015/056598, dated Jan. 28, 2016.
"International Search Report & Written Opinion", PCT/US2015/056615, dated Jan. 21, 2016.
"International Search Report & Written Opinion", PCT/US2015/056626, dated Jan. 21, 2016.
"International Search Report & Written Opinion", PCT/US2015/056632, dated Jan. 26, 2016.
"International Search Report & Written Opinion", PCT/US2016/013988, dated Apr. 8, 2016.
"International Search Report & Written Opinion", PCT/US2016/020001, dated May 23, 2016.
"International Search Report & Written Opinion", PCT/US2016/026860, dated Jun. 1, 2016.
"International Search Report & Written Opinion", PCT/US2016/026318, dated Jun. 15, 2016.
"International Search Report & Written Opinion", PCT/US2016/028412, dated Jun. 27, 2016.
"International Search Report & Written Opinion", PCT/US2016/028206, dated Jun. 29, 2016.
"International Search Report & Written Opinion", PCT/US16/033182, dated Jul. 12, 2016.
"International Search Report & Written Opinion", PCT/US2016/036551, dated Aug. 11, 2016.
"International Search Report & Written Opinion", PCT/US2016/036798, dated Aug. 11, 2016.
"International Search Report & Written Opinion", PCT/US2016/028205, dated Aug. 16, 2016.
"International Search Report & Written Opinion", PCT/US2016/032460, dated Aug. 17, 2016.
"International Search Report & Written Opinion", PCT/US2014/039746, dated Jan. 12, 2015.
"International Search Report & Written Opinion", PCT/US2014/060841, dated Jan. 7, 2015.
"International Search Report & Written Opinion", PCT/US2015/039848, dated Oct. 20, 2015.
"International Search Report & Written Opinion", PCT/US2015/047315, dated Oct. 30, 2015.
"International Search Report & Written Opinion", PCT/US2015/048454, dated Nov. 11, 2015.
"International Search Report & Written Opinion", PCT/US2015/049928, dated Nov. 16, 2015.
"International Search Report & Written Opinion", PCT/US2015/049932, dated Nov. 16, 2015.
"International Search Report & Written Opinion", PCT/US2015/049927, dated Nov. 24, 2015.
"International Search Report & Written Opinion", PCT/US2015/051193, dated Nov. 27, 2015.
"International Search Report & Written Opinion", PCT/US2015/051146, dated Dec. 15, 2015.
"International Search Report & Written Opinion", PCT/US2015/051183, dated Dec. 15, 2015.
"International Search Report & Written Opinion", PCT/US2015/051194, dated Dec. 15, 2015.
"International Search Report & Written Opinion", PCT/US2015/051578, dated Dec. 17, 2015.
"International Search Report & Written Opinion", PCT/US2015/051583, dated Dec. 21, 2015.
"International Search Report & Written Opinion", PCT/US2015/048458, dated Dec. 23, 2015.
"International Search Report & Written Opinion", PCT/US2015/051213, dated Dec. 4, 2015.
"International Search Report & Written Opinion", PCT/US2015/051163, dated Dec. 7, 2015.
"International Search Report & Written Opinion", PCT/US2014/061445, dated Feb. 10, 2015.
"International Search Report & Written Opinion", PCT/US16/28207, dated Jun. 15, 2016.
"International Search Report & Written Opinion", PCT/US2016/015501, dated Apr. 29, 2016, 11 pages.
"International Search Report & Written Opinion", PCT/US2015/047225, dated Nov. 6, 2015, dated Nov. 6, 2015.
"International Search Report and Written Opinion", PCT/US2016/028197, dated Jun. 24, 2016.
"Invitation to Pay Additional Fees & Partial Search Report", PCT/US2016/028205, dated Jun. 22, 2016.
"Invitation to Pay Additional Fees & Partial Search Report", PCT/US2016/032430, dated Jun. 22, 2016.
"Ipitek All-Optical Sensors", http://www.ipitek.com/solutions-by-industry/all-optical-sensors., Jun. 2, 2014.
"mmWave Axial Choke Horn Antenna with Lens", Feko, Sep. 24, 2013.
"Network technology", nbnTM, nbnco.com.au, Jun. 27, 2014.
"Norse Appliance™: Block attacks before they target your network, and dramatically improve the ROI on your entire security infrastructure", norsecorp.com, 2015.
"Out-of-Band Mgmt", Cradle Point, cradlepoint.com., Sep. 2015.
"Out-of-Band Security Solution", Gigamon®, gigamon.com., Aug. 3, 2014.
"PCT International Search Report & Written Opinion", PCT/US2016/026193, dated Jun. 1, 2016.
"Powerline—Juice Up Your Network With Powerline", Netgear®, netgear.com http://www.netgear.com/home/products/networking/powerline/, Apr. 21, 2015, 3 pages.
"Pro 600 Sirius XM Radio Amplified Outdoor Antenna", Pixel Technologies, Oct. 3, 2014.

(56) **References Cited**

OTHER PUBLICATIONS

"Product Overview: Introducing SilentDefense", Security Matters, secmatters.com, Nov. 9, 2013.
"Quickly identify malicious traffics: Detect", Lancope®, lancope.com, Mar. 15, 2015.
"Radar at st Andrews", mmwaves.epr, st-andrews.ac.uk., Feb. 4, 2011.
"Resilience to Smart Meter Disconnect Attacks", ADSC Illinois at Singapore PTE, LTD., publish.illinois.edu http://publish.illinois.edu/integrativesecurityassessment/resiliencetosmartmeterdisconnectattacks/, 2015.
"RF Sensor Node Development Platform for 6LoWPAN and 2.4 GHz Applications", http://www.ti.com/tool/TIDM-RF-SENSORNODE., Jun. 2, 2014.
"Smart Out-of-Band Management", Open Gear, opengear.com., Sep. 2015.
"Tapered waveguide", Lumerical Solutions, Inc., docs.lumerical.com., 2010.
"Tapered Waveguides Improve Fiber Light Coupling Efficiency", Tech Briefs, techbriefs.com, Molex Inc., Downers Grove, Illinois and KiloLambda Technologies Ltd., Tel Aviv, Israel., Jan. 1, 2006.
"Transducer", IEEE Std 100-2000, Sep. 21, 2015, 1154.
"Troubleshooting Problems Affecting Radio Frequency Communication", cisco.com, Oct. 19, 2009.
"Wireless powerline sensor", wikipedia.org, http://en.wikipedia.org/wiki/Wireless_powerline_sensor, 2014, 3 pages.
Akiba, Shigeyuki et al., "Photonic Architecture for Beam Forming of RF Phased Array Antenna", Optical Fiber Communication Conference. Optical Society of America., Abstract Only, 2014.
Alam, M N et al., "Novel surface wave exciters for power line fault detection and communications", Antennas and Propagation (APSURSI), IEEE International Symposium on, IEEE, pp. 1139-1142, Jul. 3, 2011.
Alam, M.N. et al., "Novel surface wave exciters for power line fault detection and communications." Antennas and Propagation (APSURSI), 2011 IEEE International Symposium on. IEEE, 2011.
Alam, MD N. et al., "Design and Application of Surface Wave Sensors for nonintrusive Power Line Fault Detection," IEEE Sensors Journal, IEEE Service Center, New York, NY, US, vol. 13, No. 1, pp. 339-347, Jan. 1, 2013.
Ali, Muhammad Q. et al., "Randomizing AMI configuration for proactive defense in smart grid", Smart Grid Communications (SmartGridComm), IEEE International Conference on. IEEE, Abstract Only, http://ieeexplore.ieee.org/xpl/login.jsp?tp=&arnumber=6688027, 2013.
Angove, Alex , "Direct Bury Duct Assemblies, MPB 302 3+—Ribbonet Microducts", Ericsson, archive.ericsson.net, Jul. 30, 2014.
Angove, Alex , "How the NBN Differs from ADSL2+, Cable and Wireless", Whistle Out, whistleout.com.au, Jul. 30, 2014.
Arage, Alebel et al., "Measurement of wet antenna effects on millimetre wave propagation", Radar, IEEE Conference on IEEE., Abstract Only, 2006.
Arthur, Joseph Kweku , "Improving QoS in UMTS Network in ACCRA Business District Using Tower-less Towers", IPASJ International Journal of Electrical Engineering (IIJEE), vol. 2, Issue 11., Nov. 2014.
Asadallahi, Sina et al., "Performance comparison of CSMA/CA Advanced Infrared (Alr) and a new pointtomultipoint optical MAC protocol." Wireless Communications and Mobile Computing Conference (IWCMC), 2012 8th International. IEEE., Abstract Only, 2012.
Atwater, Harry A. , "The promise of plasmonics." Scientific American 296.4: 56-62., 2007.
Bach, Christian , "Current Sensor—Power Line Monitoring for Energy Demand Control", Application Note 308, http://www.enocean.com/fileadmin/redaktion/pdf/app_notes/AN308_CURRENT_SENSOR_Jan09.pdf, Jan. 2009, 4 pages.
Barron, Ashleigh L. , "Integrated Multicore Fibre Devices for Optical Trapping", Diss. Heriot-Watt University, 2014, 11-15.
Beal, J.C. et al., "Coaxial-slot surface-wave launcher", Electronics Letters 4.25: 557559, Abstract Only, 1968.
Bhushan, Naga , "Network densification: the dominant theme for wireless evolution into 5G", Communications Magazine, IEEE 52.2: 82-89, 2014.
Bing, Benny , "Ubiquitous Broadband Access Networks with Peer-to-Peer Application Support", Evolving the Access Network: 27-36, 2006.
Bing, Benny , "Ubiquitous Broadband Access Networks with Peer-to-Peer Application Support", Evolving the Access Network, 2006, 27-36.
Bock, James et al., "Optical coupling." Journal of Physics: Conference Series. vol. 155. No. 1. IOP Publishing., 2009.
Bowen, Leland H. et al., "A Solid Dielectric Lens Impulse Radiating Antenna with High Dielectric Constant Surrounded by a Cylindrical Shroud," Sensor and Simulation Note 498., Introduction, Apr. 2005, 3 pages.
Bridges, Greg E. et al., "Plane wave coupling to multiple conductor transmission lines above a lossy earth", Compatibility, IEEE Transactions on 31.1, Abstract Only, 1989, 21-33.
Brooke, Gary H. , Properties of surface waveguides with discontinuities and perturbations in cross-section. Diss. University of British Columbia, 1977., 1977.
Brown, J. et al., "The launching of radial cylindrical surface waves by a circumferential slot", Proceedings of the IEE Part B: Radio and Electronic Engineering 106.26: 123128., Abstract Only, 1959.
Bruno, Joseph , "Interference Reduction in Wireless Networks", Computing Research Topics, Computing Sciences Department, Villanova University, Nov. 14, 2007, 8 pages.
Burkhart, Martin et al., "Does Topology Control Reduce Interference?", Department of Computer Science, ETH Zurich, Proceedings of the 5th ACM international symposium on Mobile ad hoc networking and computing, ACM, 2004, 11 pages.
Callis, et al., "An In-Line Power Monitor for HE11 Low Loss Transmission Lines", Proceedings of the 29th International Conference on Infrared and Millimeter Waves (IRMMW), Karlsruhe, Germany, 2004.
Carroll, John M. et al., "Developing the Blacksburg electronic village", Communications of the ACM 39.12: 69-74, 1996.
Chandra, Shekar , "Transmission Line Fault Detection & Indication through GSM", IRD India, ISSN (Online): 2347-2812, vol. 2, Iss. 5, 2014.
Chen, Dong et al., "A trust management model based on fuzzy reputation for internet of things", Computer Science and Information Systems 8.4: 12071228, Abstract Only, 2011.
Chen, Yingying , "Detecting and Localizing Wireless Spoofing Attacks", Sensor, Mesh and Ad Hoc Communications and Networks, SECON'07. 4th Annual IEEE Communications Society Conference on IEEE, 2007, 10 pages.
Chiba, Jiro , "Experimental Studies of the Losses and Radiations Due to Bends in the Goubau Line", IEEE Transactions on Microwave Theory and Techniques, Feb. 1977, 94-100.
Chiba, Jiro , "On the Equivalent Circuit for the G-Line Above Ground", International Wroclaw Symposium on Electromagnetic Compatibility, 1998, 78-82.
Choudhury, Romit R. , "Utilizing Beamforming Antennas for Wireless Mult-hop Networks", www.slideserve.com, Sep. 20, 2012.
Chu, Eunmi et al., Self-organizing and self-healing mechanisms in cooperative small cell networks. PIMRC. 2013.
Cimini, Carlos Alberto et al., "Temperature profile of progressive damaged overhead electrical conductors", Journal of Electrical Power & Energy Systems 49: 280-286., 2013.
Costantine, Joseph et al., "The analysis of a reconfigurable antenna with a rotating feed using graph models", Antennas and Wireless Propagation Letters 8: 943-946, 2009.
Covington, Michael J. et al., "Threat implications of the internet of things", Cyber Conflict (CyCon), 2013 5th International Conference on. IEEE., Abstract Only, 2013.
Crane, Robert K. , "Analysis of the effects of water on the ACTS propagation terminal antenna", Antennas and Propagation, IEEE Transactions on 50.7: 954965, Abstract Only, 2002.

(56) **References Cited**

OTHER PUBLICATIONS

De Sabata, Aldo et al., "Universitatea" Politehnica, din Timi ş oara Facultatea de Electronică ş i Telecomunica ţ ii., 2012.
Dini, Gianluca et al., "MADAM: A Multilevel Anomaly Detector for Android Malware", MMMACNS. vol. 12, 2012.
Doane, J.L. et al., "Oversized rectangular waveguides with modefree bends and twists for broadband applications", Microwave Journal 32(3), Abstract Only, 1989, 153-160.
Doelitzscher, et al., "ViteraaS: Virtual cluster as a service." Cloud Computing Technology and Science (CloudCom), 2011 IEEE Third International Conference on. IEEE., 2011.
Dooley, Kevin , "Out-of-Band Management", auvik, auvik.com., Apr. 12, 2014.
Doshi, D.A. et al., "Real Time Fault Failure Detection in Power Distribution Line using Power Line Communication", International Journal of Engineering Science 4834, 2016.
Dostert, Klaus , "Frequency-hopping spread-spectrum modulation for digital communications over electrical power lines." Selected Areas in Communications, IEEE Journal on 8.4: 700-710., Abstract Only, 1990.
Dragoo, R.E. et al., "Fiber Optic Data Bus for the AN/GYQ21(V)." Harris Corp, U.S. Communications Syst. Div. Chart, Microcopy Resolution Test, 1980.
Dutton, Harry Jr. , "Understanding Optical Communications", International Technical Support Organization, SG24-5230-00., Sep. 1998.
Ehyaie, Danial , "Novel Approaches to the Design of Phased Array Antennas," Diss. The University of Michigan., 2011.
Elmore, Glenn , "Introduction to the Propagating Wave on a Single Conductor", www.corridor.biz, Jul. 27, 2009, 30 pages.
Erickson, Katherine , "Conductive cylindrical surface waveguides." https://www.ideals.illinois.edu/bitstream/handle/2142/30914/ Erickson Katherine.pdf?sequence=1, 2012.
Erickson, Katherine , "Conductive cylindrical surface waveguides", 2012.
Eskelinen, Harri , "DFM (A)—aspects for a horn antenna design," Lappeenranta University of Technology., 2004.
Eskelinen, P. , "A low-cost microwave rotary joint," International Radar Conference, 13-17, p. 1-4., Abstract Only, Oct. 2014, 1 page.
Feng, Taiming et al., "Design of a survivable hybrid wireless-optical broadband-access network", Journal of Optical Communications and Networking 3.5, 2011, 458-464.
Feng, Wei et al., Downlink power allocation for distributed antenna systems in a multi-cell environment. 2009 5th International Conference on Wireless Communications, Networking and Mobile Computing. IEEE, 2009., 2009.
Fenye, Bao et al., "Dynamic trust management for internet of things applications", Proceedings of the 2012 international workshop on Selfaware internet of things. ACM, Abstract Only, 2012, 1 page.
Ford, Steven , AT&T's new antenna system will boost cellular coverage at Walt Disney World. Orlando Sentinel, orlandosentinel.com, Mar. 9, 2014., 2014.
Freyer, Dan , "Combating the Challenges of Ka-Band Signal Degradation", SatMagazine, satmagzine.com., Sep. 2014.
Friedman, M et al., "Low-loss RF transport over long distances," IEEE Transactions on Microwave Theory and Techniques, Jan. 1, 2001, pp. 341-348.
Friedman, M et al., "Low-Loss RF Transport Over Long Distances", IEEE Transactions on Microwave Theory and Techniques, vol. 49, No. 2, Feb. 2001, 8 pages.
Friedman, M. et al., "Low-Loss RF Transport Over Long Distances", IEEE Transactions on Microwave Theory an Techniques, vol. 49, No. 2, Feb. 2001, 341-348.
Fromm, W. et al., "A new microwave rotary joint," 1958 IRE International Convention Record, 21-25, 6:78-82., Abstract Only, Mar. 1966, 2 pages.
Garcia-Etxarri, Aitzol et al., "A combination of concave/convex surfaces for fieldenhancement optimization: the indented nanocone", Optics express 20.23, 2012, 2520125212.
Ghazisaidi, Navid et al., "Survivability analysis of next-generation passive optical networks and fiber-wireless access networks", Reliability, IEEE Transactions on 60.2, 2011, 479-492.
Goldsmith, P.F. , "Quasi-optical techniques", Proceedings of the IEEE., vol. 80, No. 11, Nov. 1, 1992.
Golrezaei, Negin et al., "FemtoCaching: Wireless Video Content Delivery through Distributed Caching Helpers", INFOCOM, Proceedings IEEE, 2012.
Gomes, Nathan J. et al., "Radio-over-fiber transport for the support of wireless broadband services", Journal of Optical Networking 8.2: 156-178., 2009.
Gonthier, François et al., "Mode coupling in nonuniform fibers: comparison between coupled-mode theory and finite-difference beam-propagation method simulations", JOSA B 8.2: 416421, Abstract Only, 1991, 3 pages.
Gritzalis, Dimitris et al., "The Sphinx enigma in critical VoIP infrastructures: Human or botnet?." Information, Intelligence, Systems and Applications (IISA), 2013 Fourth International Conference, IEEE., 2013.
Haider, Muhammad Kumail et al., Mobility resilience and overhead constrained adaptation in directional 60 GHz WLANs: protocol design and system implementation. Proceedings of the 17th ACM International Symposium on Mobile Ad Hoc Networking and Computing. ACM, 2016., 2016.
Han, Chong et al., "Crosslayer communication module for the Internet of Things", Computer Networks 57.3: 622633, Abstract Only, 2013, 1 page.
Haroun, Ibrahim et al., "WLANs meet fiber optics—Evaluating 802.11 a WLANs over fiber optics links", RF Des. Mag: 36-39., 2003.
Hassan, Karim , "Fabrication and characterization of thermo-plasmonic routers for telecom applications", Diss. Univ. de Bourgogne., 2014.
Hassan, Maaly A. , "Interference reduction in mobile ad hoc and sensor networks", Journal of Engineering and Computer Innovations vol. 2(7), Sep. 2011, 138-154.
Hassani, Alireza et al., "Porous polymer fibers for low-loss Terahertz guiding." Optics express 16.9: 6340-6351., 2008.
Hautakorpi, Jani et al., "Requirements from Session Initiation Protocol (SIP) Session Border Control (SBC) Deployments." RFC5853, IETF (2010)., 2010.
Hawrylyshen, A. et al., "Sipping Working Group J. Hautakorpi, Ed. Internet-Draft G. Camarillo Intended status: Informational Ericsson Expires: Dec. 18, 2008 R. Penfield Acme Packet.", 2008.
Hoss, R.J. et al., "Manufacturing Methods and Technology Program for Ruggedized Tactical Fiber Optic Cable", No. ITT-80-03-078. ITT Electrooptical Products Div Roanoke VA., 1980.
Ippolito, Louis J. , "Propagation effects handbook for satellite systems design. A summary of propagation impairments on 10 to 100 GHz satellite links with techniques for system design", 1989, Abstract Only, 1989, 1 page.
Izumiyama, Hidetaka et al., "Multicast over satellite", Applications and the Internet, (SAINT 2002). Proceedings. Symposium on. IEEE, 2002.
Jackson, Mark , "Timico CTO Hit by Slow FTTC Broadband Speeds After Copper Corrosion", ISP review, ispreview.co.uk, Mar. 5, 2013.
Jaeger, Raymond et al., "Radiation Performance of Germanium Phosphosilicate Optical Fibers." RADC-TR-81-69: Final Technical Report, Galileo Electro-Optical Corp., May 1981.
James, J.R. et al., "Investigations and Comparisons of New Types of Millimetre-Wave Planar Arrays Using Microstrip and Dielectric Structures", Royal Military Coll of Science Shrivenham (England)., 1985.
Jang, Hung-Chin , "Applications of Geometric Algorithms to Reduce Interference in Wireless Mesh Network", Journal on Applications of Graph Theory in Wireless Ad hoc Networks and Sensor Networks (JGRAPH-HOC) vol. 2, No. 1, Abstract Only, Mar. 2010, 1 page.
Jawhar, Imad et al., "A hierarchical and topological classification of linear sensor networks", Wireless Telecommunications Symposium, WTS, IEEE, http://faculty.uaeu.ac.ae/Nader_M/papers/WTS2009.pdf, 2009, 8 pages.

(56) **References Cited**

OTHER PUBLICATIONS

Jee, George et al., "Demonstration of the Technical Viability of PLC Systems on Medium- and Low-Voltage Lines in the United States", Broadband is Power: Internet Access via Power Line Networks, IEEE Communication Magazine, May 2003, 5 pages.
Jeong, et al., "Study of elliptical polarization requirement of KSTAR 84-GHz ECH system", Journal—Korean Physical Society 49, 2006.
Jin, , "Quasi-optical mode converter for a coaxial cavity gyrotron", Forschungszentrum, 2007.
Jin, Yu et al., "Nevermind, the Problem Is Already Fixed: Proactively Detecting and Troubleshooting Customer DSL Problems", ACM CoNEXT, Philadelphia, USA, Nov.-Dec. 2010, 12 pages.
Kamilaris, et al., "Exploring the Use of DNS as a Search Engine for the Web of Things." Internet of Things (WF-IoT), 2014 IEEE World Forum on. IEEE, 2014.
Kang, , "Chapter 6: Array Antennas," IHS Engineering360, globalspec.com, http://www.globalspec.com/reference/75109/203279/chapter-6-array-antennas., Apr. 22, 2015.
Katkovnik, Vladimir et al., "High-resolution signal processing for a switch antenna array FMCW radar with a single channel receiver", Sensor Array and Multichannel Signal Processing Workshop Proceedings, IEEE., 2002.
Khan, , "Dual polarized dielectric resonator antennas", Chalmers University of Technology, 2010.
Kikuchi, H. et al., "Hybrid transmission mode of Goubau lines" ,J.Inst.Electr.Comm.Engrs., Japan,vol. 43, pp. 39-45., 1960.
Kirkham, H. et al., "Power system applications of fiber optics (Jet Propulsion Lab." JPL Publication 84-28, Electric Energy Systems Division, U.S. DoE, p. 180., 1984.
Koshiba, Masanori et al., "Analytical expression of average power-coupling coefficients for estimating intercore crosstalk in multicore fibers", Photonics Journal, IEEE 4.5, 2012, 1987-1995.
Kroon, Barnard et al., "Steady state RF fingerprinting for identity verification: one class classifier versus customized ensemble." Artificial Intelligence and Cognitive Science. Springer Berlin Heidelberg, 198206., Abstract Only, 2010, 3 pages.
Kroyer, Thomas , "A Waveguide High Order Mode Reflectometer for the Large Hadron Collider Beam-pipe", Diss. TU Wien., 2003.
Kuhn, Marc et al., "Power Line Enhanced Cooperative Wireless Communications", IEEE Journal on Selected Areas in Communications, vol. 24, No. 7, Jul. 2006, 10 pages.
Kumar, Sailesh , "Survey of Current Network Intrusion Detection Techniques", Washington Univ. in St. Louis, Dec. 2007.
Laforte, J.L. et al., "State-of-the-art on power line de-icing", Atmospheric Research 46, 143-158, 1998.
Lappgroupusa, , "Selection of Number of Cable Cores With Emphasis on Sizing Parameters", Industrial Cable & Connector Technology News, lappconnect.blogspot.com, http://lappconnect.blogspot.com/2014_10_01_archive.html, Oct. 30, 2014.
Leech, Jamie et al., "Experimental investigation of a low-cost, high performance focal-plane horn array." Terahertz Science and Technology, IEEE Transactions on 2.1: 61-70., 2012.
Li, Xi et al., A FCM-Based peer grouping scheme for node failure recovery in wireless P2P file sharing. 2009 IEEE International Conference on Communications. IEEE, 2009., 2009.
Li, Xiang-Yang et al., "Interference-Aware Topology Control for Wireless Sensor Networks", SECON. vol. 5, 2005.
Li, Xiaowei et al., "Integrated plasmonic semi-circular launcher for dielectric-loaded surface plasmonpolariton waveguide", Optics express 19.7: 65416548, 2011.
Li, Xu et al., "Smart community: an internet of things application", Communications Magazine, IEEE 49.11: 68-75, 2011.
Lier, E. et al., "Simple hybrid mode horn feed loaded with a dielectric cone," Electronics Letters 21.13: 563564., 1985.
Lim, Christina et al., "Fiber-wireless networks and subsystem technologies", Lightwave Technology, Journal of 28.4, 390-405, 2010.
Liu, et al., A 25 Gb/s (/km 2) urban wireless network beyond IMTadvanced. IEEE Communications Magazine 49.2 (2011): 122-129.
Lou, Tiancheng , "Minimizing Average Interference through Topology Control", Algorithms for Sensor Systems, Springer Berlin Heidelberg, 2012, 115-129.
Lucyszyn, S. et al., "Novel RF MEMS Switches", Microwave Conference, APMC, Asia-Pacific. IEEE, 2007.
Lucyszyn, Stepan et al., "RF MEMS for antenna applications", Antennas and Propagation (EuCAP), 7th European Conference on. IEEE,, 2013.
Luo, Qi et al., "Circularly polarized antennas", John Wiley & Sons, Book—description only, 2013, 1 page.
Mahato, Suvranshu Sekhar , Studies on an Infrared Sensor Based Wireless Mesh Network. Diss., Abstract Only, 2010, 2 pages.
Maier, Martin et al., "The audacity of fiberwireless (FiWi) networks", AccessNets. Springer Berlin Heidelberg, 16-35., 2009.
Marcatili, E.A. et al., "Hollow Metallic and Dielectric Waveguides for Long Distance Optical Transmission and Lasers", Bell System Technical Journal 43(4), Abstract Only, 2 pages, 1964, 1783-1809.
Matsukawa, et al., A dynamic channel assignment scheme for distributed antenna networks. Vehicular Technology Conference (VTC Spring), 2012 IEEE 75th. IEEE, 2012.
McAllister, M.W. et al., "Resonant hemispherical dielectric antenna," Electronics Letters 20.16: 657659., Abstract Only, 1984, 1 page.
Meng, H. et al., "A transmission line model for high-frequency power line communication channel", Power System Technology, PowerCon 2002. International Conference on. vol. 2. IEEE, 2002. http:/ /infocom. uniroma 1.it/ ""enzobac/MengChen02. pdf, 2002.
Menon, S.S. et al., "Propagation characteristics of guided modes in a solid dielectric pyramidal horn," Proceedings of the 2012 International Conference on Communication Systems and Network Technologies. IEEE Computer Society, 2012., Abstract Only, 2012, 2 pages.
Mitchell, John E. , "Integrated Wireless Backhaul Over Optical Access Networks", Journal of Lightwave Technology 32.20, 2014, 3373-3382.
Miyagi, M. , "Bending losses in hollow and dielectric tube leaky waveguides", Applied Optics 20(7), Abstract Only, 2 pages, 1981, 1221-1229.
Moaveni-Nejad, Kousha et al., "Low-Interference Topology Control for Wireless Ad Hoc Networks", Department of Computer Science, Illinois Institute of Technology, Ad Hoc & Sensor Wireless Networks 1.1-2, 2005, 41-64.
Moisan, M. et al., "Plasma sources based on the propagation of electromagnetic surface waves", Journal of Physics D: Applied Physics 24.7: 1025, 1991.
Mokhtarian, Kianoosh et al., "Caching in Video CDNs: Building Strong Lines of Defense", EuroSys, Amsterdam, Netherlands, 2014.
Morse, T.F. , "Research Support for the Laboratory for Lightwave Technology." Brown Univ Providence RI Div of Engineering, 1992., 1992.
Mruk, Joseph Rene , "Wideband monolithically integrated frontend subsystems and components", Diss. University of Colorado, 2011.
Nachiketh, P. et al., "Optimizing public-key encryption for wireless clients", Proceedings of the IEEE International Conference on Communications (ICC 2002). No. 1., 2002.
Narayanan, Arvind , "Fingerprinting of RFID Tags and HighTech Stalking." 33 Bits of Entropy, 33bits.org, Oct. 4, 2011.
Nassa, Vinay Kumar , "Wireless Communications: Past, Present and Future", Dronacharya Research Journal: 50. vol. III, Issue-II, Jul.-Dec. 2011, 2011.
Nibarger, John P. , "An 84 pixel all-silicon corrugated feedhorn for CMB measurements." Journal of Low Temperature Physics 167.3-4 (2012): 522-527., 2012.
Nicholson, Basil J. , "Microwave Rotary Joints for X-, C-, and S-band", Battelle Memorial Inst Columbus OH, 1965.
Nuvotronics, , "PolyStrata—Phased Arrays & Antennas", Nuvotronics, nuvotronics.com http://www.nuvotronics.com/antennas.php, Apr. 26, 2015.
Olver, A. D. , "Microwave horns and feeds," vol. 39. IET, Book—description only, 1994, 1 page.

(56) **References Cited**

OTHER PUBLICATIONS

Olver, A.D. et al., "Dielectric cone loaded horn antennas," Microwaves, Antennas and Propagation, IEE Proceedings H. vol. 135. No. 3. IET., Abstract Only, 1988, 1 page.
Orfanidis, Sophocles J. , "Electromagnetic waves and antennas," Rutgers University., 2002.
Pahlavan, Kaveh et al., "Wireless data communications", Proceedings of the IEEE 82.9: 1398-1430, 1994.
Patel, Shwetak N. et al., "The Design and Evaluation of an End-User-Deployable, Whole House, Contactless Power Consumption Sensor", CHI 2010: Domestic Life, Apr. 2010, 10 pages.
Pato, et al., On building a distributed antenna system with joint signal processing for next generation wireless access networks: The FUTON approach. 7th Conference on Telecommunications, Portugal. 2008.
Paul, Sanjoy et al., "The Cache-and-Forward Network Architecture for Efficient Mobile Content Delivery Services in the Future Internet", Innovations in NGN: Future Network and Services, 2008. K-INGN 2008. First ITU-T Kaleidoscope Academic Conference, 2008.
Perkons, Alfred R. et al., "TM surface-wave power combining by a planar active-lens amplifier", Microwave Theory and Techniques, IEEE Transactions on 46.6: 775783, 1998.
Péter, Zsolt et al., "Assessment of the current intensity for preventing ice accretion on overhead conductors", Power Delivery, IEEE Transactions on 22.1: 565-574., 2007.
Petrovsky, Oleg , "The Internet of Things: A Security Overview", w.druva.com, Mar. 31, 2015.
Pham, Tien-Thang et al., "A WDM-PON-compatible system for simultaneous distribution of gigabit baseband and wireless ultrawideband services with flexible bandwidth allocation", Photonics Journal, IEEE 3.1, 2011, 13-19.
Piksa, Petr et al., "Elliptic and hyperbolic dielectric lens antennas in mmwaves", Radioengineering 20.1, 2011, 271.
Plagemann, Thomas et al., "Infrastructures for community networks", Content Delivery Networks. Springer Berlin Heidelberg, 367-388, 2008.
Pohl, , "A dielectric lens-based antenna concept for high-precision industrial radar measurements at 24GHz," Radar Conference (EuRAD), 2012 9th European, IEEE., 2012.
Ponchak, George E. et al., "A New Model for Broadband Waveguide to Microstrip Transition Design", NASA TM-88905, Dec. 1, 1986, 18 pgs.
Pranonsatit, S. et al., "Sectorised horn antenna array using an RF MEMS rotary switch", Asia-Pacific Microwave Conf., APMC., 2010.
Pranonsatit, Suneat et al., "Single-pole eight-throw RF MEMS rotary switch", Microelectromechanical Systems, Journal of 15.6: 1735-1744, 2006.
Prashant, R.R. et al., "Detecting and Identifying the Location of Multiple Spoofing Adversaries in Wireless Network", International Journal of Computer Science and Mobile Applications, vol. 2 Issue. 5, May 2014, 1-6.
Rahim, S. K. A. et al., "Measurement of wet antenna losses on 26 GHz terrestrial microwave link in Malaysia", Wireless Personal Communications 64.2: 225231, 2012.
Rambabu, K. et al., "Compact single-channel rotary joint using ridged waveguide sections for phase adjustment," IEEE Transactions on Microwave Theory and Techniques (Aug. 2003) 51(8):1982-1986., Abstract Only, Aug. 2003, 2 pages.
Rappaport, Theodore S. et al., "Mobile's Millimeter-Wave Makeover", Spectrum.IEEE.Org, Sep. 2014.
Raychaudhuri, Dipankar et al., "Emerging Wireless Technologies and the Future Mobile Internet", Cambridge University Press, Abstract Only, Mar. 2011, 1 page.
Raychem, , "Wire and Cable", Dimensions 2:1., 1996.
Reynet, Olivier et al., "Effect of the magnetic properties of the inclusions on the high-frequency dielectric response of diluted composites." Physical Review B66.9: 094412., 2002.
Rouse, Margaret , "Transport Layer Security (TLS)", TechTarget, searchsecurity.techtarget.com, Jul. 2006.
Roze, Mathieu et al., "Suspended core subwavelength fibers: towards practical designs for low-loss terahertz guidance." Optics express 19.10 (2011): 9127-9138., 2011.
Sagar, Nishant , "Powerline Communications Systems: Overview and Analysis", Thesis, May 2011, 80 pages.
Sagues, Mikel et al., "Multi-tap complex-coefficient incoherent microwave photonic filters based on optical single-sideband modulation and narrow band optical filtering." Optics express 16.1: 295-303., 2008.
Saied, Yosra Ben et al., "Trust management system design for the internet of things: a contextaware and multiservice approach", Computers & Security 39: 351365, Abstract Only, 2013, 2 pages.
Salema, Carlos et al., "Solid dielectric horn antennas," Artech House Publishers, 1998.
Salema, Carlos et al., "Solid dielectric horn antennas," Artech House Publishers, 1998, Amazon., Book—description only, 1998.
Sarafi, A. et al., "Hybrid wireless-broadband over power lines: A promising broadband solution in rural areas." Communications Magazine, IEEE 47.11 (2009): 140-147., 2009.
Sarafi, Angeliki M. et al., "Hybrid Wireless—Broadband over Power Lines: A Promising Broadband Solution in Rural Areas", IEEE Communications Magazine, Nov. 2009, 8 pages.
Sarnecki, Joseph et al., "Microcell design principles", Communications Magazine, IEEE 31.4: 76-82, 1993.
Saruhan, Ibrahim Halil , "Detecting and Preventing Rogue Devices on the Network", SANS Institute InfoSec Reading Room, sans.org, Aug. 8, 2007, 1 page.
Scarfone, Karen et al., "Technical Guide to Information Security Testing and Assessment", National Institute of Standards and Technology, csrc.nist.gov, Special Publication, Sep. 2008, 800-115.
Shafai, Lotfollah , "Dielectric Loaded Antennas", John Wiley & Sons, Inc., http://www.researchgate.net/publication/227998803_Dielectric_Loaded_Antennas, Apr. 15, 2005.
Shafi, Mansoor et al., "Advances in Propagation Modeling for Wireless Systems", EURASIP Journal on Wireless Communications and Networking. Hindawi Publishing Corp, 2009, p. 5.
Shankland, Steven , "Lowly DSL poised for gigabit speed boost", CINet, cnet.com, Oct. 21, 2014.
Shimabukuko, F.I. et al., "Attenuation measurement of very low-loss dielectric waveguides by the cavity resonator method in the millimeter/submillimeter wavelength range." No. TR-0086A (2925-06)-1. Aerospace Corp El Segundo CA Electronics Research Lab, 1989., 1989.
Shindo, Shuichi et al., "Attenuation measurement of cylindrical dielectric-rod waveguide." Electronics Letters 12.5, 117-118., 1976.
Shumate, Paul W. et al., "Evolution of fiber in the residential loop plant." IEEE Communications Magazine 29.3: 68-74., 1991.
Sievenpiper, D.F. et al., "Two-dimensional beam steering using an electrically tunable impedance surface," in Antennas and Propagation, IEEE Transactions on , vol. 51, No. 10, pp. 2713-2722., Oct. 2003.
Silver, Ralph U. , "Local Loop Overview", National Communications System (NCS), BellSouth Network Training, newnetworks.com, Aug. 2016.
Sommerfeld, A. , "On the propagation of electrodynamic waves along a wire", Annals of Physics and Chemistry New Edition, vol. 67, No. 2, 1899, 72 pages.
Strahler, Olivier , "Network Based VPNs", SANS Institute InfoSec Reading Room, sans.org., Aug. 2002.
Strieby, M.E. et al., "Television transmission over wire lines." American Institute of Electrical Engineers, Transactions of the 60.12: 1090-1096., Abstract Only, 1941, 2 pages.
Szabó, Csaba A. , "European Broadband Initiatives with Public Participation", Broadband Services: 255, 2005.
Taboada, John M. et al., "Thermo-optically tuned cascaded polymer waveguide taps." Applied physics letters 75.2: 163-165., 1999.
Talbot, David , "Adapting Old-Style Phone Wires for Superfast Internet", Adapting Old-Style Phone Wires for Superfast Internet, Jul. 30, 2013.

(56) **References Cited**

OTHER PUBLICATIONS

Templeton, Steven J. et al., "Detecting Spoofed Packets", DARPA Information Survivability Conference and Exposition, vol. 1, IEEE, 2003.
Theoleyr, Fabrice , "Internet of Things and M2M Communications", books.google.com, ISBN13: 9788792982483, Book—description only, Apr. 17, 2013, 1 page.
Thornton, John et al., "Modern lens antennas for communications engineering", vol. 39, 2013.
Valladares, Cindy , "20 Critical Security Controls: Control 7—Wireless Device Control", Tripwire—The State of Security, tripwire.com, Mar. 21, 2013.
Vogelgesang, Ralf et al., "Plasmonic nanostructures in aperture-less scanning near-field optical microscopy (aSNOM)", physica status solidi (b) 245.10: 22552260, 2008.
Volat, C. et al., "De-icing/anti-icing techniques for power lines: current methods and future direction", Proceedings of the 11th International Workshop on Atmospheric Icing of Structures, Montreal, Canada., 2005.
Wagter, Herman , "Fiber-to-the-X: the economics of last-mile fiber", ARS Technica, arstechnica.com,, Mar. 31, 2010.
Wake, David et al., "Radio over fiber link design for next generation wireless systems", Lightwave Technology, Journal of28.16: 2456-2464., 2010.
Wang, Jing et al., "The influence of optical fiber bundle parameters on the transmission of laser speckle patterns", Optics express 22.8, 2014, 8908-8918.
Wilkins, George A. , "Fiber Optic Telemetry in Ocean Cable Systems", Chapter in new edition of Handbook of Oceanographic Winch, Wire and Cable Technology, Alan H. Driscoll, Ed.,(to be published by University of Rhode Island)., 1986.
Wolff, Christian , "Phased Array Antenna" Radar Tutorial, web.archive.org, radartutorial.eu, Oct. 21, 2014.
Wu, Xidong et al., "Design and characterization of singleand multiplebeam mmwave circularly polarized substrate lens antennas for wireless communications", Microwave Theory and Techniques, IEEE Transactions on 49.3, 2001, 431-441.
Xi, Liu Xiao , "Security services in SoftLayer", Sep. 21, 2015.
Xia, Cen et al., "Supermodes for optical transmission", Optics express 19.17, 2011, 16653-16664.
Yang, , "Power Line Sensor Networks for Enhancing Power Line Reliability and Utilization", Georgia Institute of Technology, https://smartech.gatech.edu/bitstream/handle/1853/41087/Yang_Yi_201108_phd.pdf, Apr. 26, 2011, 264 pages.
Yang, et al., "Power line sensornet—a new concept for power grid monitoring", IEEE Power Engineering Society General Meeting, Abstract Only, 2006, pp. 8.
Yeh, C. et al., "Ceramic Waveguides." Interplanetary Network Progress Report141.26: 1., 2000.
Yilmaz, et al., Self-optimization of coverage and capacity in LTE using adaptive antenna systems. Diss. Aalto University, 2010.
Yu, Shui et al., "Predicted packet padding for anonymous web browsing against traffic analysis attacks", Information Forensics and Security, IEEE Transactions on 7.4, http://nsp.org.au/syu/papers/tifs12.pdf, 2012, 1381-1393.
Zelby, Leon W. , "Propagation Modes on a Dielectric Coated Wire", J. The Franklin Institute, vol. 274(2), pp. 85-97, 1962.
Zhao, et al., "Energy harvesting for a wireless-monitoring system of overhead high-voltage power lines", IET Generation, Transmission & Distribution 7, IEEE Xplore Abstract, 2013, 2 pages.
Zheng, Zhu et al., "Efficient coupling of propagating broadband terahertz radial beams to metal wires", Optics express 21.9: 1064210650, 2013.
Zucker, , "Surface-wave antennas", Antenna engineering handbook 4, 2007.
Article 34 Amendment/Response to Written Opinion filed Apr. 3, 2017 PCT/US16/28197, pp. 1-10.
Article 34 Amendment/Response to Written Opinion PCT/US16/28412, filed Apr. 4, 2017 pp. 1-10.
PCT/US2015/047225 International Preliminary Report on Patentability, dated Mar. 30, 2017 pp. 1-5.
Int'l Preliminary Report on Patentability for PCT/US15/034827 dated Mar. 9, 2017.
Article 34 Amendment filed for PCT/US16/32441 on, Mar. 14, 2017.
Article 34 Amendment for PCT/US16/27398 filed on, Mar. 14, 2017.
International Preliminary Report on Patentability for PCT/US2015/049927 dated Apr. 20, 2017.
Amendment Under Article 34 / Response to Written Opinion for PCT/US16/36290 filed on, May 15, 2017.
Amendment Under Article 34 / Response to Written Opinion for PCT/US16/36292 filed on, May 15, 2017.
Amendment Under Article 34 / Response to Written Opinion for PCT/US16/36293 filed on, May 15, 2017.
PCT/US16/36284 Article 34 Amendment filed, May 19, 2017.
PCT/US16/36285 Article 34 Amendment filed, May 19, 2017.
PCT/US16/36288 Article 34 Amendment filed, May 19, 2017.
International Report on Patentability for PCT/US15/056365 dated Jun. 1, 2017.
International Preliminary Report on Patentability for PCT/US2015/056626 dated Jun. 15, 2017.
International Preliminary Report on Patentability for PCT/US2015/056632 dated Jun. 15, 2017.
International Preliminary Report on Patentability for PCT/US16/36285 dated Jun. 21, 2017.
Article 34 Amendment, PCT/US16/36556, filed May 31, 2017, 1-13.
International Preliminary Report on Patentability, PCT/US2015/051194, dated May 4, 2017, 1-7.
International Preliminary Report on Patentability, PCT/US2015/056368, dated Jun. 1, 2017, 1-8.
International Preliminary Report on Patentability, PCT/US2015/056320, dated Jun. 1, 2017, 1-9.
International Preliminary Report on Patentability PCT/US16/28412, dated May 19, 2017, pp. 1-21.
International Preliminary Report on Patentability PCT/US16/26860, dated May 19, 2017 pp. 1-95.
"Amendment Under Article 34-Response to Written Opinion Filed May 15, 2017", Application No. PCT/US16/36303 filed Jun. 8, 2016 1-10.
"Article 34 Amendment Filed May 19, 2017", PCT Application No. PCT/US16/36286 filed Jun. 8, 2016 1-8.
"Article 34 Amendment Filed", PCT Application No. PCT/US16/36553 Filed Jun. 9, 2016 1-11.
"Amendment Under Article 34 and Response to Written Opinion Filed May 15, 2017", Application No. PCT/US16/41561 filed Jul. 8, 2016 1-14.
"PCT Amendment Under Article 34 Response to Written Opinion Filed May 15, 2017", PCT Application PCT/US16/36254 filed Jun. 8, 2016 1-11.
"AirCheck G2 Wireless Tester", NetScout®, enterprise.netscout.com, Dec. 6, 2016 10 pages.
"Amendment Under Article 34 / Response to Written Opinion", PCT/US16/28207, Filed Apr. 3, 2017 pp. 1-12.
"Amendment Under Article 34 / Response to Written Opinion", PCT/US16/36295, filed May 4, 2017.
"Amendment Under Article 34 / Response to Written Opinion", PCT/US16/36297, filed May 31, 2017 12 pages.
"Amendment Under Article 34 / Response to Written Opinion", PCT Application No. PCT/US16/27403, dated Mar. 24, 2017 11 pages.
"Amendment Under Article 34 / Response to Written Opinion", PCT Application No. PCT/US16/32430, dated Mar. 14, 2017 19 pages.
"Amendment Under Article 34 / Response to Written Opinion", PCT Application No. PCT/US16/26193, dated Feb. 24, 2017 6 pages.
"Amendment Under Article 34 / Response to Written Opinion", PCT Application No. PCT/US16/26860, dated Feb. 28, 2017 6 pages.

(56) **References Cited**

OTHER PUBLICATIONS

"Amendment Under Article 34 / Response to Written Opinion", PCT Application No. PCT/US16/26318, dated Feb. 24, 2017, 7 pages.
"Amendment Under Article 34, Response to Written Opinion", PCT/US16/36289, Filed May 11, 2017, 8 pages.
"Amendment Under Article 34/Response to Written Opinion", PCT Application No. PCT/US2016/020001, dated Jan. 13, 2017, 6 pages.
"Article 34 Amendment", PCT/US16/36798, dated May 15, 2017.
"Article 34 Amendment", PCT/US16/33182, dated Apr. 4, 2017, 1-12.
"Article 34 Amendment", PCT Application No. PCT/US16/30964, dated Apr. 25, 2017, 13 pages.
"Article 34 Amendment", PCT/US16/36551, dated May 23, 2017, 14 pages.
"Article 34 Amendment", PCT/US16/35383, dated Apr. 14, 2017, 15 pages.
"Article 34 Amendment", PCT/US16/36388, dated May 31, 2017, 9 pages.
"Article 34 Amendment Filed Apr. 18, 2017 in PCT Application No. PCT/US16/57161".
"Article 34 Amendment filed Apr. 3, 2017", PCT Application No. PCT/US16/28206, dated Apr. 3, 2017, 9 pages.
"Article 34 Amendment for", PCT/US16/40992 filed on, May 5, 2017.
"Brackets, Conduit Standoff", Hubbell Power Systems, Inc., hubbellpowersystems.com, Dec. 2, 2010, 2 pages.
"Broadband Over Power Lines (BPL): Developments and Policy Issues", Organisation for Economic Co-operation and Development, Directorate for Science, Technology and Industry, Committee for Information, Computer and Communications Policy, Jun. 2, 2009, 35 pages.
"Cisco Aironet 1500 Series Access Point Large Pole Mounting Kit Instructions", www.cisco.com/c/en/us/td/docs/wireless/antenna/installation/guide/18098.html, 2008, 9 pages.
"Doubly-fed Cage-cone Combined Broadband Antennas for Marine Applications", http://www.edatop.com/down/paper/antenna/%E5%A4%A9%E7%BA%BF%E8%AE%BE%E8%AE%A1-890w5nebp5ilpq.pdf, 2007, 7 pages.
"Dual Band Switched-Parasitic Wire Antennas for Communications and Direction Finding", www.researchgate.net/profile/David_Thiel2/publication/3898574_Dual_band_switched-parasitic_wire_antennas_for_communications_and_direction_finding/links/0fcfd5091b4273ce54000000.pdf, 2000, 5 pages.
"Electronic Countermeasure (ECM) Antennas", vol. 8, No. 2, Apr. 2000, 2 pages.
"Harvest energy from powerline", www.physicsforums.com/threads/harvest-energy-from-powerline.685148/, Discussion thread about harvesting power from powerlines that includes the suggestion of clamping a device to the power line., 2013, 8 pages.
"International Preliminary Report on Patentability", PCT/US15/51583, dated May 4, 2017.
"International Preliminary Report on Patentability", PCT/US2015/049932, dated Apr. 27, 2017.
"International Preliminary Report on Patentability", PCT/US15/056598, dated Jun. 1, 2017.
"International Preliminary Report on Patentability", PCT/US15/48458, dated Apr. 13, 2017.
"International Preliminary Report on Patentability", PCT/US16/27398 dated May 1, 2017.
"International Preliminary Report on Patentability", PCT/US16/28207, dated May 16, 2017.
"International Preliminary Report on Patentability", PCT/US16/27403, dated May 19, 2017.
"International Preliminary Report on Patentability", PCT/US2015/051146, dated May 4, 2017.
"International Preliminary Report on Patentability", PCT/US2015/051163, dated May 4, 2017.
"International Preliminary Report on Patentability", PCT/US16/20001, dated Feb. 17, 2017 1-14.
"International Preliminary Report on Patentability", PCT/US16/36798, dated Jun. 9, 2017, 20 pages.
"International Preliminary Report on Patentability", PCT/US16/35383, dated Jun. 15, 2017, 32 pages.
"International Preliminary Report on Patentability", PCT/US15/56316 dated Jun. 1, 2017 8 pages.
"International Preliminary Report on Patentability", PCT/US15/51213, dated May 4, 2017, 9.
"International Preliminary Report on Patentability & Written Opinion", PCT/US16/32430, dated May 25, 2017, 122 pages.
"International Preliminary Report on Patentability & Written Opinion", PCT/US16/28206, dated May 16, 2017, 23 pages.
"International Preliminary Report on Patentability & Written Opinion", PCT/US2015/051578, dated May 4, 2017, 6 pages.
"International Preliminary Report on Patentability & Written Opinion", PCT/US2015/047315, dated Mar. 30, 2017, 8 pages.
"International Preliminary Report on Patentability & Written Opinion", PCT/US2015/051193, dated May 4, 2017, 8 pages.
"International Preliminary Report on Patentability dated May 23, 2017", PCT Application No. PCT/US2015/056615 filed Oct. 21, 2015; dated May 23, 2017 1-7.
"International Search Report & Written Opinion", PCT/US2016/035384, dated Oct. 31, 2016.
"International Search Report & Written Opinion", PCT/US2016/036303, dated Aug. 24, 2016.
"International Search Report & Written Opinion", PCT/US2016/036288, dated Sep. 1, 2016.
"International Search Report & Written Opinion", PCT/2016/035383, dated Sep. 2, 2016.
"International Search Report & Written Opinion", PCT/US16/036284, dated Sep. 8, 2016.
"International Search Report & Written Opinion", PCT/US2016/036286, dated Sep. 13, 2016.
"International Search Report & Written Opinion", PCT/US2016/036293, dated Sep. 15, 2016.
"International Search Report & Written Opinion", PCT/US2016/040992, dated Oct. 17, 2016.
"International Search Report & Written Opinion", PCT/US16/050488, dated Nov. 11, 2016.
"International Search Report & Written Opinion", PCT/US16/50345, dated Nov. 15, 2016.
"International Search Report & Written Opinion", PCT/US2016/050346, dated Nov. 17, 2016.
"International Search Report & Written Opinion", PCT/US2016/050860, dated Nov. 17, 2016, 11 pages.
"International Search Report & Written Opinion", PCT/US2016/050344, dated Nov. 25, 2016, 16 pages.
"International Search Report and Written Opinion", PCT/US16/036388, dated Aug. 30, 2016.
"International Search Report and Written Opinion", PCT/US2016/036297, dated Sep. 5, 2016.
"International Search Report and Written Opinion", PCT/US2016/036292, dated Sep. 13, 2016.
"International Search Report and Written Opinion", PCT/US2016/046315, dated Nov. 3, 2016.
"International Search Report and Written Opinion", PCT/US2016/050039, dated Nov. 14, 2016.
"International Search Report and Written Opinion", PCT/US2016/050347, dated Nov. 15, 2016.
"International Search Report and Written Opinion", PCT/US2016/051217 dated Nov. 29, 2016.
"International Search Report and Written Opinion", PCT/US2016/036289, dated Aug. 11, 2016.
"International Search Report and Written Opinion", PCT/US2016/036295, dated Aug. 30, 2016.
"International Search Report and Written Opinion", PCT/US2016/036553, dated Aug. 30, 2016, 1-14.
"International Search Report and Written opinion", PCT/US2016/036556, dated Sep. 22, 2016.
"International Searching Authority", International Search Report and Written Opinion, PCT/US2016/032289, dated Sep. 28, 2016, 1-12.

(56) **References Cited**

OTHER PUBLICATIONS

"Invitation to Pay Additional Fees and, Where Applicable, Protest Fee", PCT/US2016/035384, dated Aug. 31, 2016, 7 pages.
"Micromem Demonstrates UAV Installation of Power Line Monitoring Mounting System", MicroMem, micromem.com, Mar. 4, 2015, 1-3.
"Newsletter 4.4—Antenna Magus version 4.4 released!", antennamagus.com, Aug. 10, 2013, 8 pages.
"PCT Article 34 Amendment filed Apr. 12, 2017", PCT Application PCT/US16/32289 filed May 13, 2016, 1-11.
"PCT International Search Report", PCT/US2016/057161, PCT International Search Report and Written Opinion, dated Jan. 12, 2017 1-13, dated Jan. 12, 2017, 1-13.
"PCT/US2016/041561, PCT International Search Report and Written Opinion", dated Oct. 10, 2016, 1-15.
"PCT/US2016/046323, PCT International Search Report", dated Oct. 24, 2016, 1-13.
"Response to Written Opinion and Article 34 Amendment", PCT/US2016/035384, filed Apr. 12, 2017, 10 pages.
"Technology Brief 13: Touchscreens and Active Digitizers", https://web.archive.org/web/20100701004625/http://web.engr.oregonstate.edu/~moon/engr203/read/read4.pdf, 2010, 289-311.
"The world's first achievement of microwave electric-field measurement utilizing an optical electric-field sensor mounted on an optical fiber, within a microwave discharge ion engine boarded on asteroid explorers etc.", Investigation of internal phenomena and performance improvement in microwave discharge ion engines, Japan Aerospace Exploration Agency (JAXA), Nippon Telegraph and Telephone Corporation, Aug. 7, 2013, 4 pages.
Adabo, Geraldo J. , "Long Range Unmanned Aircraft System for Power Line Inspection of Brazilian Electrical System", Journal of Energy and Power Engineering 8 (2014), Feb. 28, 2014, 394-398.
Al-Ali, A.R. et al., "Mobile RFID Tracking System", Information and Communication Technologies: From Theory to Applications, ICTTA 2008, 3rd International Conference on IEEE, 2008, 4 pages.
Alam, M. N. et al., "Novel Surface Wave Exciters for Power Line Fault Detection and Communications", Department of Electrical Engineering, University of South Carolina, Antennas and Propagation (APSURSI), 2011 IEEE International Symposium, IEEE, 2011, 1-4.
Alaridhee, T. et al., "Transmission properties of slanted annular aperture arrays. Giant energy deviation over sub-wavelength distance", Optics express 23.9, 2015, 11687-11701.
Ali, Tariq et al., "Diagonal and Vertical Routing Protocol for Underwater Wireless Sensor Network", Procedia—Social and Behavioral Sciences 129, 2014, 372-379.
Allen, Jeffrey et al., "New Concepts in Electromagnetic Materials and Antennas", Air Force Research Laboratory, Jan. 2015, 80 pages.
Amirshahi, P. et al., "Transmission channel model and capacity of overhead multiconductor mediumvoltage powerlines for broadband communications", Consumer Communications and Networking Conference, 2005, 5 pages.
Amt, John H. et al., "Flight Testing of a Pseudolite Navigation System on a UAV", Air Force Institute of Technology: ION Conference, Jan. 2007, 9 pages.
Antennamagus, "Parabolic focus pattern fed reflector with shroud", antennamagus.com, Jul. 4, 2014, 2 pages.
Ares-Pena, Francisco J. et al., "A simple alternative for beam reconfiguration of array antennas", Progress in Electromagnetics Research 88, 2008, 227-240.
Ascom, "TEMS Pocket—a Complete Measurement Smartphone System in your Hand", http://www.ascom.us/us-en/tems_pocket_14.0_feature_specific_datasheet.pdf, 2014, 2 pages.
A-Tech Fabrication, "Dual Antenna Boom Assembly", http://web.archive.org/web/20090126192215/http://atechfabrication.com/products/dual_antenna_boom.htm, 2009, 2 pages.
Baanto, "Surface Acoustive Wave (SAW) Touch Screen", http://baanto.com/surface-acoustic-wave-saw-touch-screen, 2016 4 pages.
Babakhani, Aydin, "Direct antenna modulation (DAM) for on-chip mm-wave transceivers", Diss. California Institute of Technology, 2008, 2 pages.
Barlow, H. M. et al., "Surface Waves", 621.396.11 : 538.566, Paper No. 1482 Radio Section, 1953, pp. 329-341.
Barnes, Heidi et al., "DeMystifying the 28 Gb/s PCB Channel: Design to Measurement", Design Con. 2014, Feb. 28, 2014, 54 pages.
Benevent, Evangéline , "Transmission lines in MMIC technology", Universitá Mediterranea di Reggio Calabria, Jan. 28, 2010, 63 pages.
Benkhelifa, Elhadj , "User Profiling for Energy Optimisation in Mobile Cloud Computing", 2015, 1159-1165.
Berweger, Samuel et al., "Light on the Tip of a Needle: Plasmonic Nanofocusing for Spectroscopy on the Nanoscale", The Journal of Physical Chemistry Letters; pubs.acs.org/JPCL, 2012, 945-952.
Blanco-Redondo, Andrea et al., "Coupling midinfrared light from a photonic crystal waveguide to metallic transmission lines", Applied Physics Letters 104.1, 2014, 6 pages.
Blattenberger, Kirt , "DroneBased Field Measurement System (dBFMS)", RF Cafe, rfcafe.com, Jul. 29, 2014, 3 pages.
Brambilla, Gilberto et al., "Ultra-low-loss optical fiber nanotapers", Optoelectronics Research Centre, University of Southampton; http://www.orc.soton.ac.uk, vol. 12, No. 10, May 7, 2004, 2258-2263.
Briso-Rodriguez, "Measurements and Modeling of Distributed Antenna Systems in Railway Tunnels", IEEE Transactions on Vehicular Technology, vol. 56, No. 5, Sep. 2007, 2870-2879.
Budde, Matthias , "Using a 2DST Waveguide for Usable, Physically Constrained Out-of-Band Wi-Fi Authentication", https://pdfs.semanticscholar.org/282e/826938ab7170c198057f9236799e92e21219.pdf, 2013, 8 pages.
Campista, Miguel E. et al."Improving the Data Transmission Throughput Over the Home Electrical Wiring", The IEEE Conference on Local Computer Networks 30th Anniversary, 2005, 1-8.
Capece, P. et al., "FDTD Analysis of a Circular Coaxial Feeder for Reflector Antenna", Antennas and Propagation Society International Symposium, IEEE Digest, vol. 3, 1997, pp. 1570-1573.
Chaimae, Elmakfalji et al., "New Way of Passive RFID Deployment for Smart Grid", Journal of Theoretical and Applied Information Technology 82.1, Dec. 10, 2015, 81-84.
Chen, KE et al., "Geometric phase coded metasurface: from polarization dependent directive electromagnetic wave scattering to diffusionlike scattering", Scientific Reports 6, 2016, 1-10.
Cliff, Oliver M. et al., "Online localization of radio-tagged wildlife with an autonomous aerial robot system", Proceedings of Robotics Science and Systems XI, 2015, 1317.
Collins, D.D. et al., "Final Report on Advanced Antenna Design Techniques", GER 11246, Report No. 4, Sep. 6, 1963, 1-70.
Comsol, "Fast Numerical Modeling of a Conical Horns Lens Antenna", comsol.com, Application ID: 18695, Sep. 16, 2016 3 pages.
Crisp, "Uplink and Downlink Coverage Improvements of 802.11g Signals Using a Distributed Antenna Network", Journal of Lightwave Technology (vol. 25, Issue: 11), Dec. 6, 2007, 1-4.
Crosswell, "Aperture excited dielectric antennas", http://ntrs.nasa.gov/archive/nasa/casi.ntrs.nasa.gov/19740017567.pdf, 1974, 128 pages.
Curry, James M., "A Web of Drones: A 2040 Strategy to Reduce the United States Dependance on Space Based Capabilities", Air War College, Feb. 17, 2015, 34 pages.
Daniel, Kai et al., "Using Public Network Infrastructures for UAV Remote Sensing in Civilian Security Operations", Homeland Security Affairs, Supplement 3, Mar. 2011, 11 pages.
De Freitas, Carvalho et al., "Unmanned Air Vehicle Based Localization and Range Estimation of WiFi Nodes", 2014, 109 pages.
Debord, Benoit et al., "Generation and confinement of microwave gas-plasma in photonic dielectric microstructure", Optics express 21.21, 2013, 25509-25516.
Deilmann, Michael , "Silicon oxide permeation barrier coating and sterilization of PET bottles by pulsed low-pressure microwave plasmas", Dissertation, 2008, 142 pages.

(56) **References Cited**

OTHER PUBLICATIONS

Deng, Chuang et al., "Unmanned Aerial Vehicles for Power Line Inspection: A Cooperative Way in Platforms and Communications", Journal of Communicatinos vol. No. 9, No. 9, Sep. 2014, 687-692.
Dyson, John D. , "The Equiangular Spiral Antenna", IRE Transactions on Antennas and Propagation, 1959, 181-187.
Earth Data, "Remote Sensors", NASA, earthdata.nasa.gov, Oct. 17, 2016, 36 pages.
Eizo, "How can a screen sense touch? A basic understanding of touch panels", www.eizo.com/library/basics/basic_understanding_of_touch_panel, Sep. 27. 2010, 8 pages.
Elmore, Glenn et al., "A Surface Wave Transmission Line", QEX, May/Jun. 2012, pp. 3-9.
Emerson, "About Rosemount 5300 Level Transmitter", www.emerson.com, Nov. 2016, 6 pages.
Eom, Seung-Hyun et al., "Pattern switchable antenna system using inkjet-printed directional bow-tie for bi-direction sensing applications", Sensors 15.12, 2015, 31171-31179.
Faggiani, Adriano, "Smartphone-based crowdsourcing for network monitoring: opportunities, challenges, and a case study", http://vecchio.iet.unipi.it/vecchio/files/2010/02/article.pdf, 2014, 8 pages.
Farzaneh, Masoud et al., "Systems for Prediction and Monitoring of Ice Shedding, Anti-cicing and De-icing for Power Line Conductors and Ground Wires", Dec. 1, 2010, 1-100.
Fattah, E. Abdel et al., "Numerical 3D simulation of surface wave excitation in planar-type plasma processing device with a corrugated dielectric plate", Elsevier, Vacuum 86, 2011, 330-334.
Feko, "Lens Antennas", Altair, feko.info, Jun. 30, 2014, 2 pages.
Fenn, Alan J. et al., "A Terrestrial Air Link for Evaluating Dual-Polarization Techniques in Satellite Communications", vol. 9, No. 1, The Lincoln Laboratory Journal, 1996, 3-18.
Fiorelli, Riccardo et al., "ST7580 power line communication systemonchip design guide", Doc ID 022923 Rev 2, Jul. 2012, 63 pages.
Fitzgerald, William D. , "A 35-GHz Beam Waveguide System for the Millimeter-Wave Radar", The Lincoln Laboratory Journal, vol. 5, No. 2, 1992, 245-272.
Galli, "For the Grid and Through the Grid: The Role of Power Line Communications in the Smart Grid", Proceedings of the IEEE 99.6, Jun. 2011, 1-26.
Gerini, Giampiero, "Multilayer array antennas with integrated frequency selective surfaces conformal to a circular cylindrical surface", http://alexandria.tue.nl/openaccess/Metis248614.pdf, 2005, 2020-2030.
Geterud, Erik G. , "Design and Optimization of Wideband Hat-Fed Reflector Antenna with Radome for Satellite Earth Station", http://publications.lib.chalmers.se/records/fulltext/163718.pdf, Discloses Frequency Selective Surfaces for antenna coverings for weather protection (table of materials on p. 29-30; pp. 37-46), 2012, 70 pages.
Gilbert, Barrie et al., "The Gears of Genius", IEEE SolidState Circuits Newsletter 4.12, 2007, 10-28.
Glockler, Roman , "Phased Array for Millimeter Wave Frequencies", International Journal of Infrared and Millimeter Waves, Springer, vol. 11, No. 2, Feb. 1, 1990, 10 pages.
Godara, "Applications of Antenna Arrays to Mobile Communications, Part I: Performance Improvement, Feasibility, and System Considerations", Proceedings of the IEEE, vol. 85, No. 7, Jul. 1997, 1031-1060.
Goubau, Georg et al."Investigation of a Surface-Wave Line for Long Distance Transmission", 1952, 263-267.
Goubau, Georg et al."Investigations with a Model Surface Wave Transmission Line", IRE Transactions on Antennas and Propagation, 1957, 222-227.
Goubau, Georg , "Open Wire Lines", IRE Transactions on Microwave Theory and Techniques, 1956, 197-200.
Goubau, Georg , "Single-Conductor Surface-Wave Transmission Lines", Proceedings of the I.R.E., 1951, 619-624.
Goubau, Georg , "Surface Waves and Their Application to Transmission Lines", Radio Communication Branch, Coles Signal Laboratory, Mar. 10, 1950, 1119-1128.
Goubau, Georg , "Waves on Interfaces", IRE Transactions on Antennas and Propagation, Dec. 1959, 140-146.
Greco, R. , "Soil water content inverse profiling from single TDR waveforms", Journal of hydrology 317.3, 2006, 325-339.
Gunduz, Deniz et al., "The multiway relay channel", IEEE Transactions on Information Theory 59.1, 2013, 5163.
Guo, Shuo et al., "Detecting Faulty Nodes with Data Errors for Wireless Sensor Networks", 2014, 25 pages.
Hadi, Ghozali S. et al., "Autonomous UAV System Development for Payload Dropping Mission", The Journal of Instrumentation, Automation and Systems, vol. 1, No. 2, 2014, pp. 72-22.
Hafeez, "Smart Home Area Networks Protocols within the Smart Grid Context", Journal of Communications vol. 9, No. 9, Sep. 2014, 665-671.
Halder, Achintya et al., "Low-cost alternate EVM test for wireless receiver systems", 23rd IEEE VLSI Test Symposium (VTS'05), 2005, 6 pages.
Hale, Paul et al., "A statistical study of deembedding applied to eye diagram analysis", IEEE Transactions on Instrumentation and Measurement 61.2, 2012, 475-488.
Halligan, Matthew S. , "Maximum crosstalk estimation and modeling of electromagnetic radiation from PCB/highdensity connector interfaces", http://scholarsmine.mst.edu/cgi/viewcontent.cgiarticle=3326&context=doc toral_dissertations, 2014, 251 pages.
Hanashi, Abdalla M. et al., "Effect of the Dish Angle on the Wet Antenna Attenuation", IEEE, 2014, 1-4.
Hays, Phillip , "SPG-49 Tracking Radar", www.okieboat.com/SPG-49%20description.html, 2015, 15 pages.
Heo, Joon et al."Identity-Based Mutual Device Authentication Schemes for PLC Systems", IEEE International Symposium on Power Line Communications and Its Applications, 2008, pp. 47-51.
Howard, Courtney, "UAV command, control & communications", Military & Aerospace Electronics, militaryaerospace.com, Jul. 11, 2013, 15 pages.
Hussain, Mohamed T. et al., "Closely Packed Millimeter-Wave MIMO Antenna Arrays with Dielectric Resonator Elements", Antennas and Propagation (EuCAP) 2016 10th European Conference, Apr. 2016, 1-5.
Huth, G. K. "Integrated source and channel encoded digital communication system design study", http://ntrs.nasa.gov/archive/nasa/casi.ntrs.nasa.gov/19750003064.pdf, 1974, 65 pages.
Ikrath, K. et al., "Antenna Innovation Glass-Fiber Tube Focuses Microwave Beam", Electronics, vol. 35, No. 38, Sep. 21, 1962, 44-47.
Illinois Historic Archive, "Antennas on the Web", Photo Archive of Antennas, ece.illinois.ed, 1-18, Dec. 2016.
Islam, M. T. , "Coplanar Waveguide Fed Microstrip Patch Antenna", Information Technology Journal 9.2 (2010): 367-370., 2010.
James, Graeme L. et al., "Diplexing Feed Assemblies for Application to Dual-Reflector Antennas", IEEE Transactions on Antennas and Propagation, vol. 51, No. 5, May 2003, 1024-1029.
James, J. R. et al."Investigations and Comparisons of New Types of Millimetre-Wave Planar Arrays Using Microstrip and Dielectric Structures", Royal Military College of Science, Apr. 1985, 122 pages.
Japan Patent Office, , "JP Office Action dated Feb. 14, 2017", dated Feb. 14, 2017, 1-12.
Jensen, Michael , "Data-Dependent Fingerprints for Wireless Device Authentication", www.dtic.mil/cgi-bin/GetTRDoc?AD=ADA626320, 2014, 15 pages.
Jiang, Peng , "A New Method for Node Fault Detection in Wireless Sensor Networks", 2009, 1282-1294.
Jiang, Y.S. et al., "Electromagnetic orbital angular momentum in remote sensing", PIERS Proceedings, Moscow, Russia, Aug. 18-21, 2009, 1330-1337.
Jones, Jr., Howard S. , "Conformal and Small Antenna Designs", U.S. Army Electronics Research and Development Command, Harry Diamond Laboratories, Apr. 1981, 32 pages.

(56) **References Cited**

OTHER PUBLICATIONS

Kado, Yuichi et al., "Exploring SubTHz Waves for Communications, Imaging, and Gas Sensing", Fog 2: O2, PIERS Proceedings, Beijing, China, Mar. 23-27, 2009, 42-47.
Karbowiak, A. E. et al., "Characteristics of Waveguides for Long-Distance Transmission", Journal of Research of the National Bureau of Standards, vol. 65D, No. 1, Jan.-Feb. 1961, May 23, 1960, 75-88.
Katrasnik, Jaka , "New Robot for Power Line Inspection", 2008 IEEE Conference on Robotics, Automation and Mechatronics, 2008, 1-6.
Kedar, "Wide Beam Tapered Slot Antenna for Wide Angle Scanning Phased Array Antenna", Progress in Electromagnetics Research B, vol. 27, 2011, 235-251.
Khan, Kaleemullah , "Authentication in Multi-Hop Wireless Mesh Networks", World Academy of Science, Engineering and Technology, International Journal of Electrical, Computer, Energetic, Electronic and Communication Engineering vol. 2, No. 10, 2008, 2406-2411.
Khan, Mohammed R. , "A beam steering technique using dielectric wedges", Diss. University of London, Dec. 1985, 3 pages.
Kim, Jong-Hyuk et al., "Real-time Navigation, Guidance, and Control of a UAV using Low-cost Sensors", Australian Centre for Field Robotics, Mar. 5, 2011, 6 pages.
Kim, Myungsik et al., "Automated RFID-based identification system for steel coils", Progress in Electromagnetics Research 131, 2012, 1-17.
Kima, Yi-Gon et al., "Generating and detecting torsional guided waves using magnetostrictive sensors of crossed coils", Chonnam National University, Republic of Korea, Elsevier Ltd, 2010, 145-151.
Kleinrock, Leonard et al., "On measured behavior of the ARPA network", National Computer Conference, 1974, 767-780.
Kliros, George S. , "Dielectric-EBG covered conical antenna for UWB applications", www.researchgate.net/profile/George_Kliros/publication/235322849_Dielectric-EBG_covered_conical_antenna_for_UWB_applications/links/54329e410cf225bddcc7c037.pdf, 2010, 10 pages.
Koga, Hisao et al., "High-Speed Power Line Communication System Based on Wavelet OFDM", 7th International Symposium on Power-Line Communications and Its Applications, Mar. 26-28, 2003, 226-231.
Kolpakov, Stanislav A. et al., "Toward a new generation of photonic humidity sensors", Sensors 14.3, 2014, 3986-4013.
Kuehn, E , "Self-configuration and self-optimization of 4G Radio Access Networks", http://wirelessman.org/tgm/contrib/S80216m-07_169.pdf, 2007, 13 pages.
Kumar, Sumeet et al., "Urban street lighting infrastructure monitoring using a mobile sensor platform", IEEE Sensors Journal, 16.12, 2016 4981-4994.
Kune, Denis F. et al., "Ghost Talk: Mitigating EMI Signal Injection Attacks against Analog Sensors", IEEE Symposium on Security and Privacy, 2013, 145-159.
Lairdtech, "Allpurpose Mount Kit", www.lairdtech.com, Mar. 29, 2015, 2 pages.
Lazaropoulos, Athanasios , "TowardsModal Integration of Overhead and Underground Low-Voltage and Medium-Voltage Power Line Communication Channels in the Smart Grid Landscape:Model Expansion, Broadband Signal Transmission Characteristics, and Statistical Performance Metrics", International Scholarly Research Network, ISRN Signal Processing, vol. 2012, Article ID 121628, 17 pages, Mar. 26, 2012, 18 pages.
Lazaropoulos, Athanasios G. , "Wireless sensor network design for transmission line monitoring, metering, and controlling: introducing broadband over power lines-enhanced network model (BPLeNM)", ISRN Power Engineering, 2014, 23 pages.
Lee, Joseph C. , "A Compact Q-/K-Band Dual Frequency Feed Horn", No. TR-645, Massachusetts Institute of Technology, Lincoln Laboratory, May 3, 1983, 40 pages.
Lee, Sung-Woo , "Mutual Coupling Considerations in the Development of Multi-feed Antenna Systems", http://ntrs.nasa.gov/archive/nasa/casi.ntrs.nasa.gov/19750003064.pdf, 2008, 127 pages.
Li, Mo et al., "Underground structure monitoring with wireless sensor networks", Proceedings of the 6th international conference on Information processing in sensor networks, ACM, 2007, 69-78.
Liang, Bin , "Cylindrical Slot FSS Configuration for Beam-Switching Applications", IEEE Transactions on Antennas and Propagation, vol. 63, No. 1, Jan. 2015, 166-173.
Lier, Erik , "A Dielectric Hybrid Mode Antenna Feed: A Simple Alternative to the Corrugated Horn", IEEE Transactions on Antennas and Propagation, vol. AP-34, No. 1, Jan. 1986, 21-30.
Lumerical Solutions, Inc., , "Waveguide Bragg Microcavity", www.lumerical.com, Sep. 2016 6 pages.
Luo, Hailu et al., "Reversed propagation dynamics of Laguerre-Gaussian beams in left-handed materials", Physical Review A 77.2, 023812., Feb. 20, 2008, 1-7.
Makwana, G. D. et al., "Wideband Stacked Rectangular Dielectric Resonator Antenna at 5.2 GHz", International Journal of Electromagnetics and Applications 2012, 2(3), 2012, 41-45.
Marin, Leandro , "Optimized ECC Implementation for Secure Communication between Heterogeneous IoT Devices", www.mdpi.com/1424-8220/15/9/21478/pdf, 2015, 21478-21499.
Marrucci, Lorenzo , "Rotating light with light: Generation of helical modes of light by spin-to-orbital angular momentum conversion in inhomogeneous liquid crystals", International Congress on Optics and Optoelectronics. International Society for Optics and Photonics, 2007, 12 pages.
Marzetta, "Noncooperative Cellular Wireless with Unlimited Numbers of Base Station Antennas", IEEE Transactions on Wireless Communications, vol. 9, No. 11, Nov. 2010, 3590-3600.
Matikainen, Leena et al., "Remote sensing methods for power line corridor surveys", ISPRS Journal of Photogrammetry and Remote Sensing, 119, 2016 10-31.
McKeown, David M. et al., "Rulebased interpretation of aerial imagery", IEEE Transactions on Pattern Analysis and Machine Intelligence 5, 1985, 570-585.
Meessen, A. , "Production of EM Surface Waves by Superconducting Spheres: A New Type of Harmonic Oscillators", Progress in Electromagnetics Research Symposium Proceedings, Moscow, Russia, Aug. 19-23, 2012, pp. 529-533.
Mehta, "Advance Featuring Smart Energy Meter With Bi-Directional Communication", Electronics & Communication MEFGI, Feb. 9, 2014, 169-174.
Mena, F.P. et al., "Design and Performance of a 600720GHz SidebandSeparating Receiver Using and AIN SIS Junctions", IEEE Transactions on Microwave Theory and Techniques 59.1, 2011, 166-177.
Miller, Ashley et al., "Pathway to Ubiquitous Broadband: Environments, Policies, and Technologies to Implementation", Oct. 2016 20 pages.
Miller, David A. , "Establishing Optimal Wave Communication Channels Automatically", Journal of Lightwave Technology, vol. 31, No. 24, Dec. 15, 2013, 3987-3994.
Mishra, Sumita et al., "Load Balancing Optimization in LTE/LTEA Cellular Networks: A Review", arXiv preprint arXiv:1412.7273 (2014), 2014, 1-7.
Mori, A. et al., "The Power Line Transmission Characteristics for an OFDM Signal", Progress in Electromagnetics Research, PIER 61, Musashi Institute of Technology, 2006, 279-290.
Mueller, G.E. et al., "Polyrod Antennas", Bell System Technical Journal, vol. 26., No. 4, Oct. 29, 1947, 837-851.
Mushref, Muhammad , "Matrix solution to electromagnetic scattering by a conducting cylinder with an eccentric metamaterial coating", www.sciencedirect.com/science/article/pii/S0022247X06011450/pdf?md5=4823be0348a3771b5cec9ffb7f326c2c&pid=1-s2.0-S0022247X06011450-main.pdf, Discloses controlling antenna radiation pattern with coatings, 2007, 356-366.
Nakano, Hisamatsu , "A Low-Profile Conical Beam Loop Antenna with an Electromagnetically Coupled Feed System", http://repo.lib.hosei.ac.jp/bitstream/10114/3835/1/31_TAP(Low- Profile).pdf , Dec. 2000, 1864-1866.

(56) **References Cited**

OTHER PUBLICATIONS

Nakano, Hisamatsu et al., "A Spiral Antenna Backed by a Conducting Plane Reflector", IEEE Transactions on Antennas and Propagation, vol. AP-34 No. 6, Jun. 1986, 791-796.
Nandi, Somen et al., "Computing for rural empowerment: enabled by last-mile telecommunications", IEEE Communications Magazine 54.6, 2016, 102-109.
Nassar, , "Local Utility Powerline Communications in the 3-500 kHz Band: Channel Impairments, Noise, and Standards", IEEE Signal Processing Magazine, 2012, 1-22.
Niedermayer, Uwe et al., "Analytic modeling, simulation and interpretation of broadband beam coupling impedance bench measurements", Nuclear Instruments and Methods in Physics Research Section A: Accelerators, Spectrometers, Detectors and Associated Equipment 776, 2015, 129-143.
Nikitin, A. Y. et al., "Efficient Coupling of Light to Graphene Plasmons by Compressing Surface Polaritons with Tapered Bulk Materials", NanoLetters; pubs.acs.org/NanoLett, Apr. 28, 2014, 2896-2901.
Nikitin, Pavel V. et al., "Propagation Model for the HVAC Duct as a Communication Channel", IEEE Transactions on Antennas and Propagation 51.5, 2003, 7 pages.
NWClimate, "Weather Instruments and Equipment Explained", nwclimate.org, May 7, 2015, 22 pages.
Ohliger, Michael, "An introduction to coil array design for parallel MRI", http://mriquestions.com/uploads/3/4/5/7/34572113/intro_to_coil_design_parallel_.pdf, 2006, 16 pages.
Paruchuri, et al., "Securing Powerline Communication", IEEE, 2008, 64-69.
Patel, Pinak S. et al., "Sensor Fault Detection in Wireless Sensor Networks and Avoiding the Path Failure Nodes", International Journal of Industrial Electronics and Electrical Engineering, vol. 2, Issue-3, Mar. 2014, 2347-6982.
Patent Cooperation Treaty, "International Preliminary Report on Patentability dated Jun. 15, 2017", PCT Application No. PCT/US16/36254 filed Jun. 7, 2016 1-21.
Patent Cooperation Treaty, "International Preliminary Report on Patentability dated Jun. 16, 2017", PCT Application No. PCT/US16/36553 filed Jun. 16, 2016 25 pages.
Patent Cooperation Treaty, "International Preliminary Report on Patentability dated Jun. 26, 2017", PCT Application No. PCT/US16/36303 filed Jun. 8, 2016 1-21.
Patent Cooperation Treaty, "International Preliminary Report on Patentability dated Jun. 26, 2017", PCT Application No. PCT/US16/36295 filed Jun. 8, 2016 1-10.
Patent Cooperation Treaty, "International Preliminary Report on Patentability dated Apr. 25, 2017", Application No. PCT/US2015/051183, dated Apr. 25, 2017 1-8.
Patent Cooperation Treaty, "International Preliminary Report on Patentability dated Jun. 15, 2017", PCT Application No. PCT/US16/33182 filed May 19, 2016 dated Jun. 15, 2017, 52 pages.
Patent Cooperation Treaty (PCT), "International Preliminary Report on Patentability", Application No. PCT/US2015/049928, dated Apr. 27, 2017 1-9.
PCT, "International Search Report", dated Oct. 25, 2016, 1-12.
Pike, Kevin J. et al., "A spectrometer designed for 6.7 and 14.1 T DNP-enhanced solid-state MAS NMR using quasi-optical microwave transmission", Journal of Magnetic Resonance, 2012, 9 pages.
Qi, Xue et al., "Ad hoc QoS ondemand routing (AQOR) in mobile ad hoc networks", Journal of parallel and distributed computing 63.2, 2003, 154-165.
Qiu, Lili et al., "Fault Detection, Isolation, and Diagnosis in Multihop Wireless Networks", Dec. 2003, 16 pages.
Quan, Xulin , "Analysis and Design of a Compact Dual-Band Directional Antenna", IEEE Antennas and Wireless Propagation Letters, vol. 11, 2012, 547-550.
Quinstar Technology, Inc., , "Prime Focus Antenna (QRP series)", quinstar.com, Aug. 19, 2016 2 pages.
Ranga, Yogesh et al., "An ultra-wideband quasi-planar antenna with enhanced gain", Progress in Electromagnetics Research C 49, 2014, 59-65.
Rangan, Sundeep et al., "Millimeter-Wave Cellular Wireless Networks: Potentials and Challenges", Proceedings of the IEEE, vol. 102, No. 3, Mar. 2014, 366-385.
Rangel, Rodrigo K. et al., "Sistema de Inspecao de Linhas de Transmissao de Energia Electrica Utilizando Veiculos Aereos Nao-Tripulados", Sep. 14-16, 2009, 1-9.
Rekimoto, Jun , "SmartSkin: An Infrastructure for Freehand Manipulation on Interactive Surfaces", https://vs.inf.ethz.ch/edu/SS2005/DS/papers/surfaces/rekimoto-smartskin.pdf, 2002, 8 pages.
Ren-Bin, Zhong et al., "Surface plasmon wave propagation along single metal wire", Chin. Phys. B, vol. 21, No. 11, May 2, 2012, 9 pages.
Ricardi, L. J. , "Some Characteristics of a Communication Satellite Multiple-Beam Antenna", Massachusetts Institute of Technology, Lincoln Laboratory, Technical Note 1975-3, Jan. 28, 1975, 62 pages.
Rieke, M. et al., "High-Precision Positioning and Real-Time Data Processing of UAV Systems", International Archives of the Photogrammetry, Remote Sensing and Spatial Information Sciences, vol. XXXVIII-1/C22, 2011, 119-124.
Robinson, D.A. et al., "Advancing processbased watershed hydrological research using nearsurface geophysics: A vision for, and review of, electrical and magnetic geophysical methods", Hydrological Processes 22.18, Mar. 11, 2008, 3604-3635.
Robles, Rosslin John et al., "A Review on Security in Smart Home Development", International Journal of Advanced Science and Technology 15, Feb. 2010, 13-22.
Rosenberg, Uwe et al., "A novel frequency-selective power combiner/divider in single-layer substrate integrated waveguide technology", IEEE Microwave and Wireless Components Letters, vol. 23, No. 8, Aug. 2013, 406-408.
Rousstia, M. W. , "Switched-beam antenna array design for millimeter-wave applications", https://pure.tue.nl/ws/files/4418145/599448877400424.pdf, Jan. 1, 2011, 148 pages.
Sahoo, Srikanta , "Faulty Node Detection in Wireless Sensor Networks Using Cluster", Apr. 2013, 212-223.
Scerri, Paul et al., "Geolocation of RF emitters by many UAVs", AIAA Infotech, Aerospace 2007 Conference and Exhibit, 2007, 1-13.
Schoning, Johannes et al., "Multi-Touch Surfaces: A Technical Guide", Johannes Schöning, Institute for Geoinformatics University of Münster, Technical Report TUM-10833, 2008, 19 pages.
Sembiring, Krisantus , "Dynamic Resource Allocation for Cloud-based Media Processing", http://www.chinacloud.cn/upload/2013-04/13042109511919.pdf, 2013, 49-54.
Sharma, Archana et al., "Dielectric Resonator Antenna for X band Microwave Application", Research & Reviews, International Journal of Advanced Research in Electrical, Electronics and Instrumentation Engineering, Oct. 2016 9 pages.
Shila, Devu M. , "Load-Aware Traffic Engineering for Mesh Networks", Computer Communications 31.7, 2008, 1460-1469.
Shin, Donghoon et al., "10 Gbps Millimeter-Wave OFDM Experimental System with Iterative Phase Noise Compensation", Tokyo Institute of Technology, IEEE, 2013, 184-186.
Silvonen, Kimmo , "Calibration and DeEmbedding of Microwave Measurements Using Any Combination of Oneor TwoPort Standards", Publication of the Circuit Theory Laboratory, CT4, 1987, 1-28.
Simionovici, Ana-Maria et al., "Predictive Modeling in a VoIP System", 2013, 32-40.
Simons, Rainee N. , "Coplanar Waveguide Feeds for Phased Array Antennas", Solid State Technology Branch of NASA Lewis Research Center Fourth Annual Digest, Conference on Advanced Space Exploration Initiative Technologies cosponsored by AIAA, NASA and OAI, 1992, 1-9.
Singh, Sapana et al., "Key Concepts and Network Architecture for 5G Mobile Technology", International Journal of Scientific Research Engineering & Technology (IJSRET), IIMT Engineering College, Meerut, India, vol. 1, Issue 5, Aug. 2012, 165-170.

(56) **References Cited**

OTHER PUBLICATIONS

Singh, Seema M. et al., "Broadband Over Power Lines a White Paper", State of New Jersey, Division of the Ratepayer Advocate, NJ, Oct. 2016 67 pages.
Song, Kaijun et al., "Broadband radial waveguide power amplifier using a spatial power combining technique", www.mtech.edu/academics/mines/geophysical/xzhou/publications/songfanzhou_2009b_impa.pdf, 2009, 7 pages.
Sospedra, Joaquim et al., "Badalona Oil PierBased Met-Ocean Monitoring Station", Campbell Scientific, www.campbellsci.com, Nov. 2016 2 pages.
Souryal, Michael R. et al., "Rapidly Deployable Mesh Network Testbed", https://pdfs.semanticscholar.org/f914/1ce6999c4095eab3bdea645745761ebe5141.pdf, 2009, 6 pages.
Sowmya, Arcot et al., "Modelling and representation issues in automated feature extraction from aerial and satellite images", ISPRS journal of photogrammetry and remote sensing, 55.1, 2000, 34-47.
Spencer, D G. , "Novel Millimeter ACC Antenna Feed", IEEE Colloquium on Antennas for Automotives, Mar. 10, 2000, 10 pages.
Stancil, Daniel D. et al., "High-speed internet access via HVAC ducts: a new approach", Global Telecommunications Conference, IEEE vol. 6, 2001, 4 pages.
Sun, Zhi et al., "Magnetic Induction Communications for Wireless Underground Sensor Networks", IEEE Transactions on Antennas and Propagation, vol. 58, No. 7, Jul. 2010, 2426-2435.
Sundqvist, Lassi , "Cellular Controlled Drone Experiment: Evaluation of Network Requirements", 2015, 71 pages.
Szczys, Mike , "Cameras Perch on Power Lines, Steal Electricity", http://hackaday.com/2010/06/28/cameras-perch-on-power-lines-steal-electricity/, Discloses cameras that clamp on to power lines and use induction as a power source., 2010, 1 page.
Tantawi, Sami G. et al., "High-power multimode X-band rf pulse compression system for future linear colliders", Physical Review Special Topics—Accelerators and Beams, 1098-4402/05/8(4)/042002, 2005, 19 pages.
Teng, Ervin et al., "Aerial Sensing and Characterization of ThreeDimensional RF Fields", Univ. at Buffalo, cse.buffalo.edu, Sep. 2016, 6 pages.
Tesoriero, Ricardo et al., "Tracking autonomous entities using RFID technology", IEEE Transactions on Consumer Electronics 55.2, 2009, 650-655.
Thota, Saigopal et al., "Computing for Rural Empowerment: Enabled by Last-Mile Telecommunications (Extended Version)", Technical Report, 2013, 14 pages.
Thottapan, M. , "Design and simulation of metal PBG waveguide mode launcher", www.researchgate.net/profile/Dr_M_Thottappan/publication/262415753_Design_and_Simulation_of_Metal_PBG_Waveguide_Mode_Launcher/links/0f317537ad93a5e2a4000000.pdf, 2014, 383-387.
Tillack, M. S. et al., "Configuration and engineering design of the ARIES-RS tokamak power plant", https://www.researchgate.net/publication/222496003_Configuration_and_engineering_design_of_the_ARIES-RS_tokamak_power_plant, 1996, 87-113.
Tucson Electric Power, , "Energy-Harvesting Power Supply", http://sdpm.arizona.edu/projects/project-publi/upid/38a8cf3b42f35576de25de1f6dcc20f3, Discloses a project to harvest energy from a power line and that a device was built that clamps onto a power line., 2016, 1 page.
UK Essays, "Beam Adaptive Algorithms for Smart Antennas Computer Science Essay", www.ukessays.com, Mar. 23, 2015, 21 pages.
Van Atta, L.C. , "Contributions to the antenna field during World War II", www.nonstopsystems.com/radio/pdf-hell/article-IRE-5-1962.pdf, 1962, 692-697.
Wade, Paul , "Multiple Reflector Dish Antennas", www.w1ghz.org/antbook/conf/Multiple_reflector_antennas.pdf, 2004, 45 pages.
Wang, Hao et al., "Dielectric Loaded Substrate Integrated Waveguide (SIW)—Plan Horn Antennas", IEEE Transactions on Antennas and Propagation, IEEE Service Center, Piscataway, NJ, US, vol. 56, No. 3, Mar. 1, 2010, 640-647.
Wang, Wei , "Optimization Design of an Inductive Energy Harvesting Device for Wireless Power Supply System Overhead High-Voltage Power Lines", https://pdfs.semanticscholar.org/3941/601af7a21d55e8b57ab0c50d5f1d9f9f6868.pdf, Discloses an induction based energy harvesting device that takes energy from overhead powerlines (Figure 4)., 2016 16 pages.
Wang, Xingfu et al., "Zigzag coverage scheme algorithm & analysis for wireless sensor networks", Network Protocols and Algorithms 5.4, 2013, 19-38.
Washiro, Takanori, "Applications of RFID over power line for Smart Grid", Power Line Communications and Its Applications (ISPLC), 2012 16th IEEE International Symposium on. IEEE, 2012, 83-87.
Wenger, N. , "The launching of surface waves on an axial-cylindrical reactive surface", IEEE Transactions on Antennas and Propagation 13.1, 1965, 126-134.
Werner, Louis B. et al., "Operation Greenhouse", Scientific Director's Report of Atomic Weapon Tests at Eniwetok, Annex 6.7 Contimation-Decontamination Studies Naval Radiological Defense Lab, 1951, 209 pages.
Wikipedia, "Angular Momentum of Light", https://en.wikipedia.org/wiki/Angular_momentum_of_light, Nov. 10, 2016 1-7.
Wilkes, Gilbert , "Wave Length Lenses", Dec. 5, 1946, 49 pages.
Wolfe, Victor et al., "Feasibility Study of Utilizing 4G LTE Signals in Combination With Unmanned Aerial Vehicles for the Purpose of Search and Rescue of Avalanche Victims (Increment 1)", University of Colorado at Boulder, Research Report, 2014, 26 pages.
Won Jung, Chang et al., "Reconfigurable Scan-Beam Single-Arm Spiral Antenna Integrated With RF-MEMS Switches", IEEE Transactions on Antennas and Propagation, vol. 54, No. 2, Feb. 2006, 455-463.
Woodford, Chris , "How do touchscreens work?", www.explainthatstuff.com/touchscreens.html, Aug. 23, 2016, 8 pages.
Xiao, Shiyi et al., "Spin-dependent optics with metasurfaces", Nanophotonics 6.1, 215-234., 2016, 215-234.
Yeh, C. et al., "Thin-Ribbon Tapered Coupler for Dielectric Waveguides", 5/151994, 42-48 , May 15, 1994.
Yeh, W.H. C. , "Electromagnetic Surface-Wave Propagation Along a Dielectric Cylinder of Elliptical Cross Section", Thesis, California Institute of Technology, Pasadena, CA, 1962, 182 pgs.
Zhang, "Modified Tapered Slot-line Antennas for Special Applications", REV Journal on Electronics and Communications, vol. 2, Jul.-Dec. 2012, 106-112.
Zhang, Ming et al., "PlanetSeer: Internet Path Failure Monitoring and Characterization in Wide Area Services", OSDI, vol. 4, 2004, 33 pages.

* cited by examiner

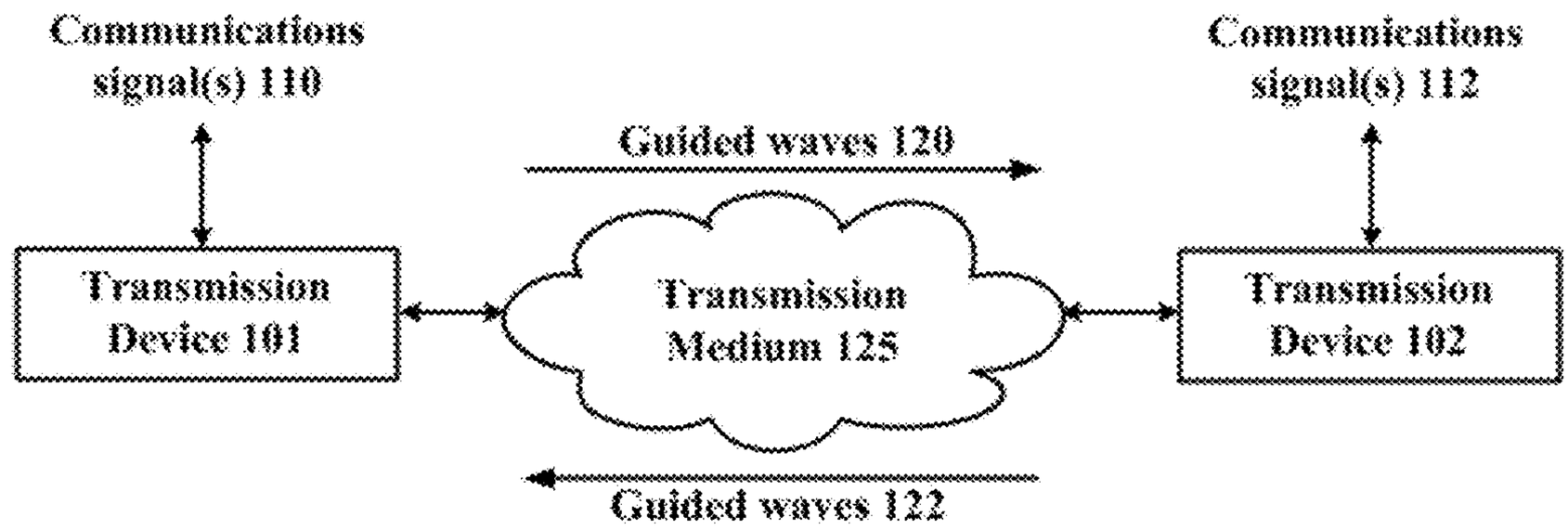

100

FIG. 1

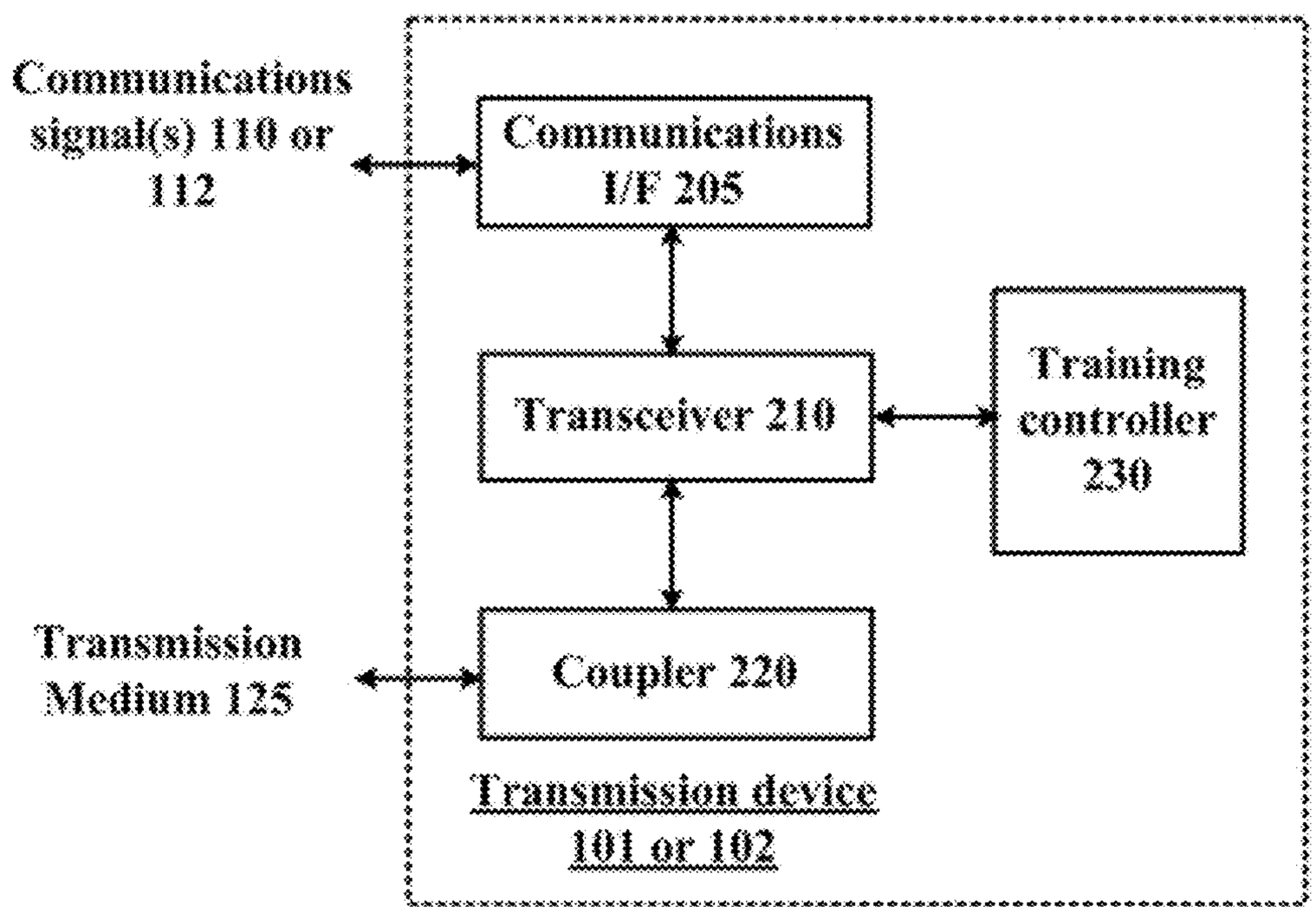

200

FIG. 2

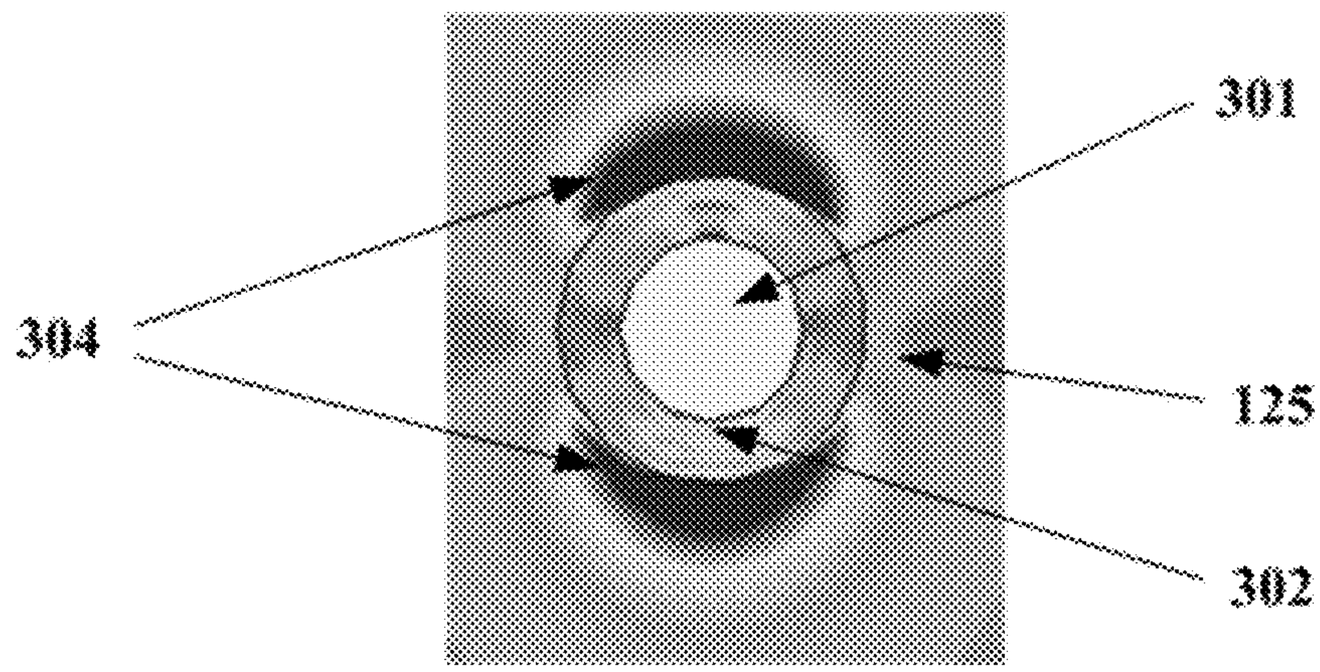

300

FIG. 3

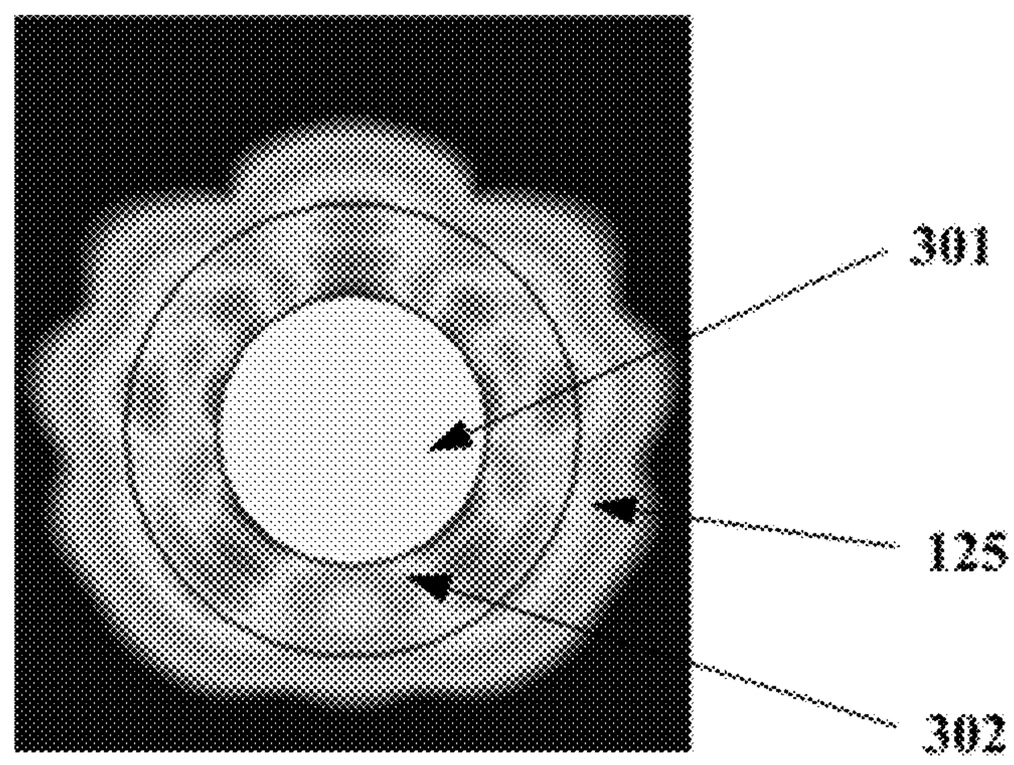

400

FIG. 4

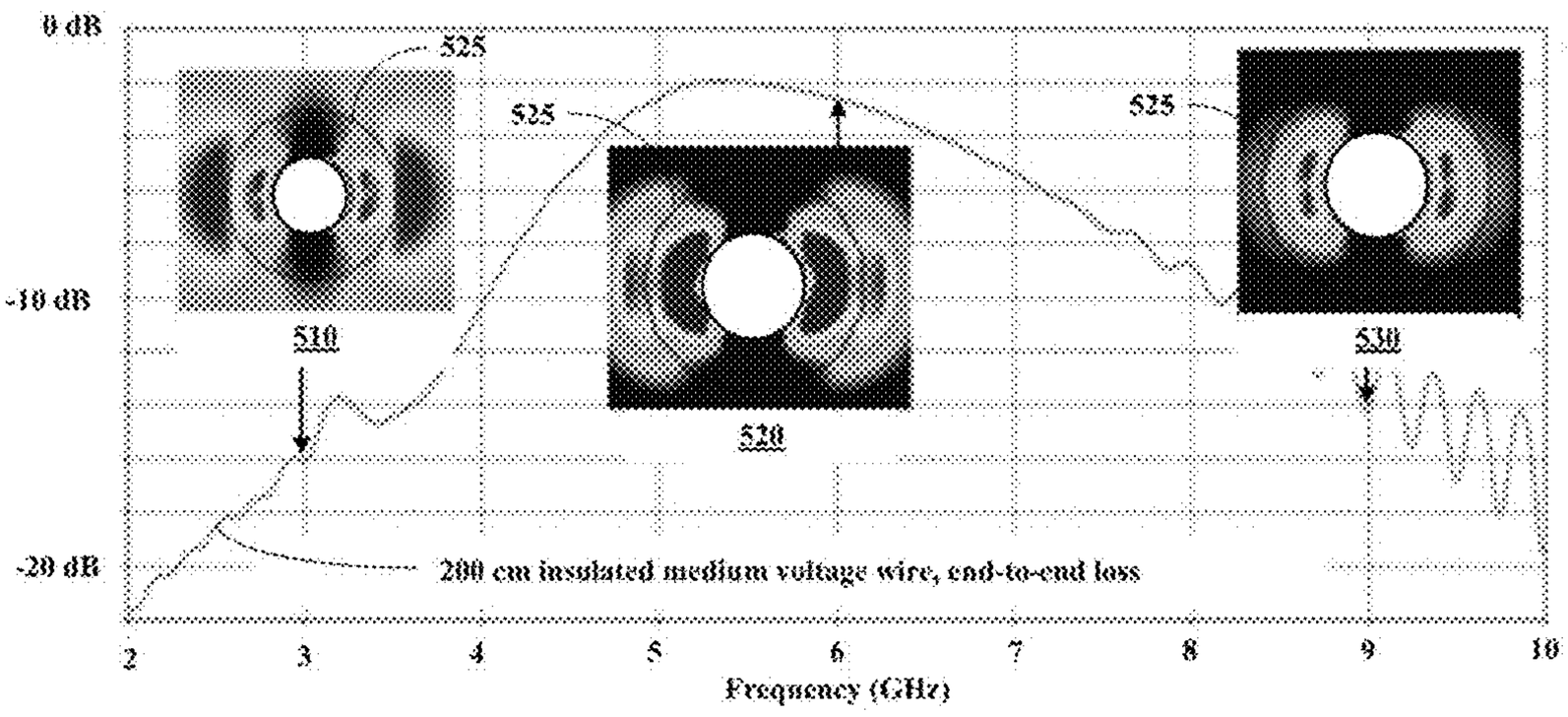

500

FIG. 5A

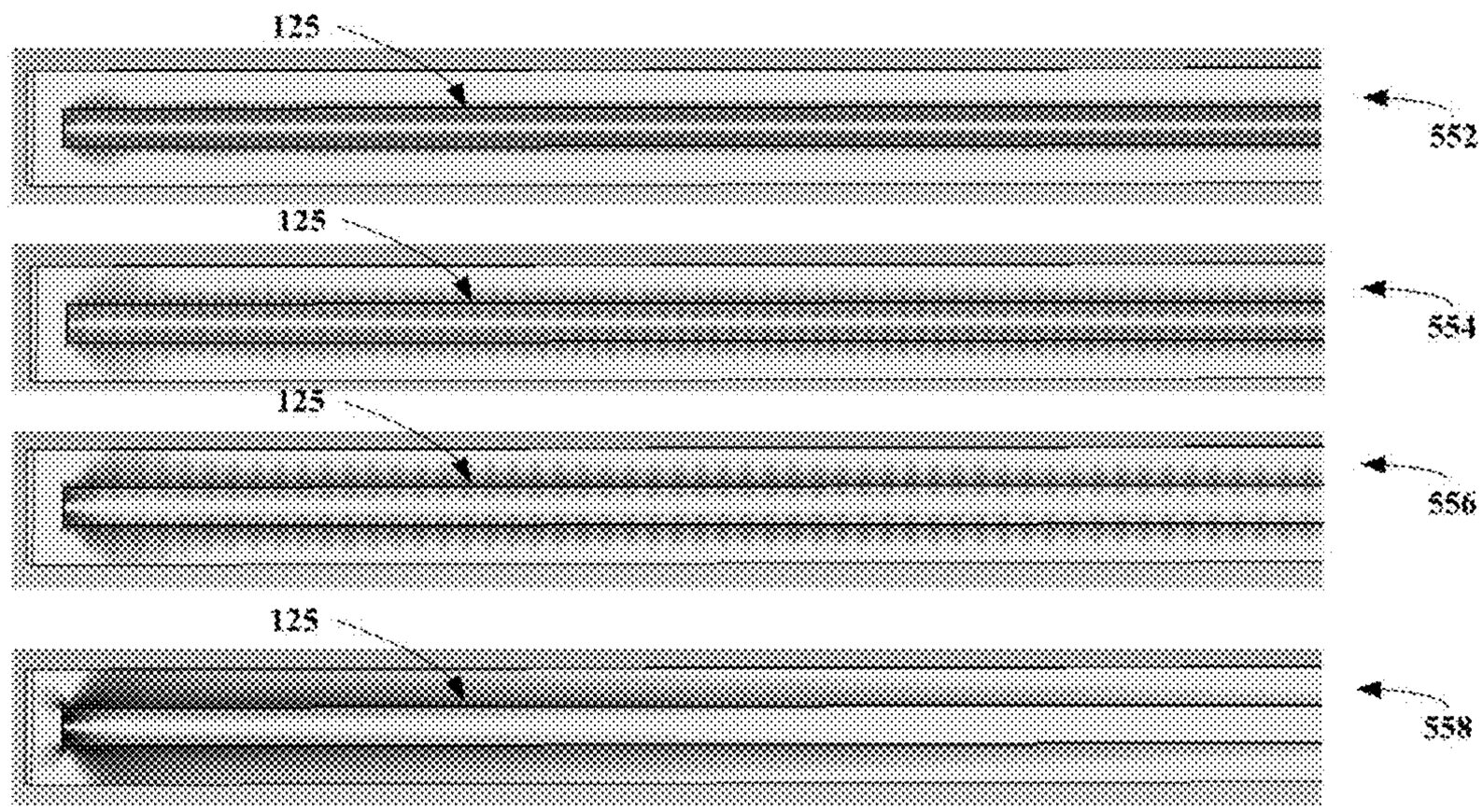

550

FIG. 5B

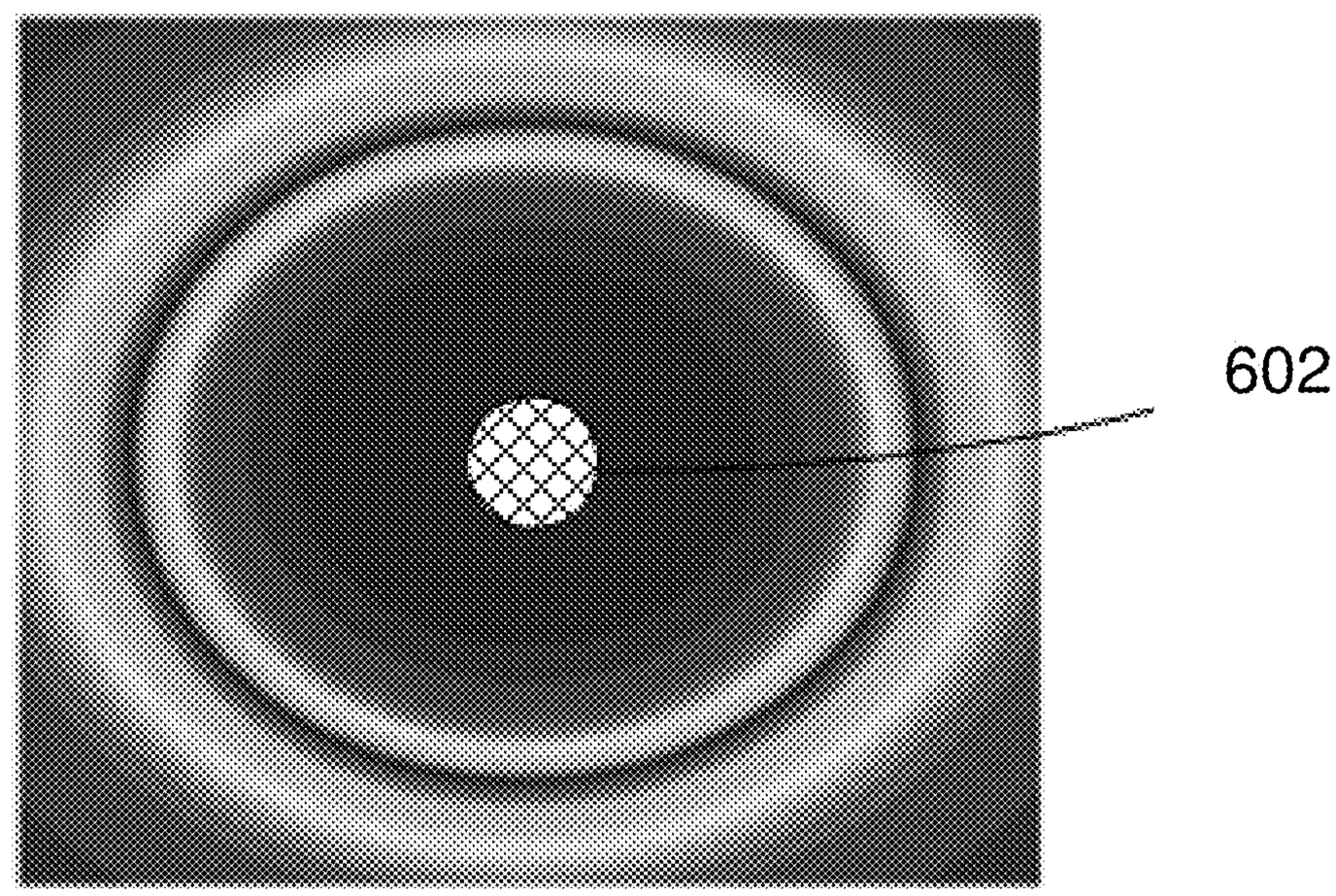

600

FIG. 6

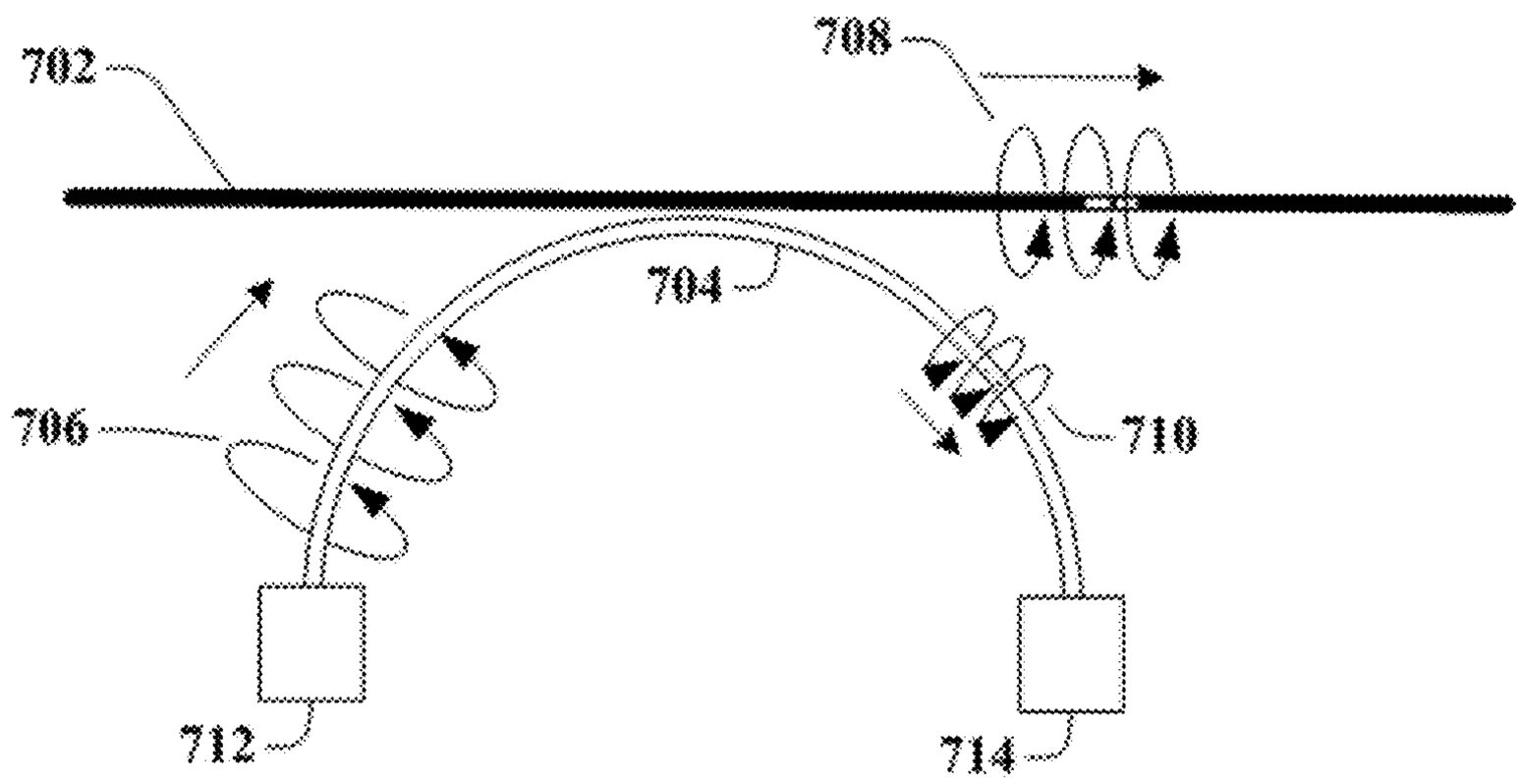

700

FIG. 7

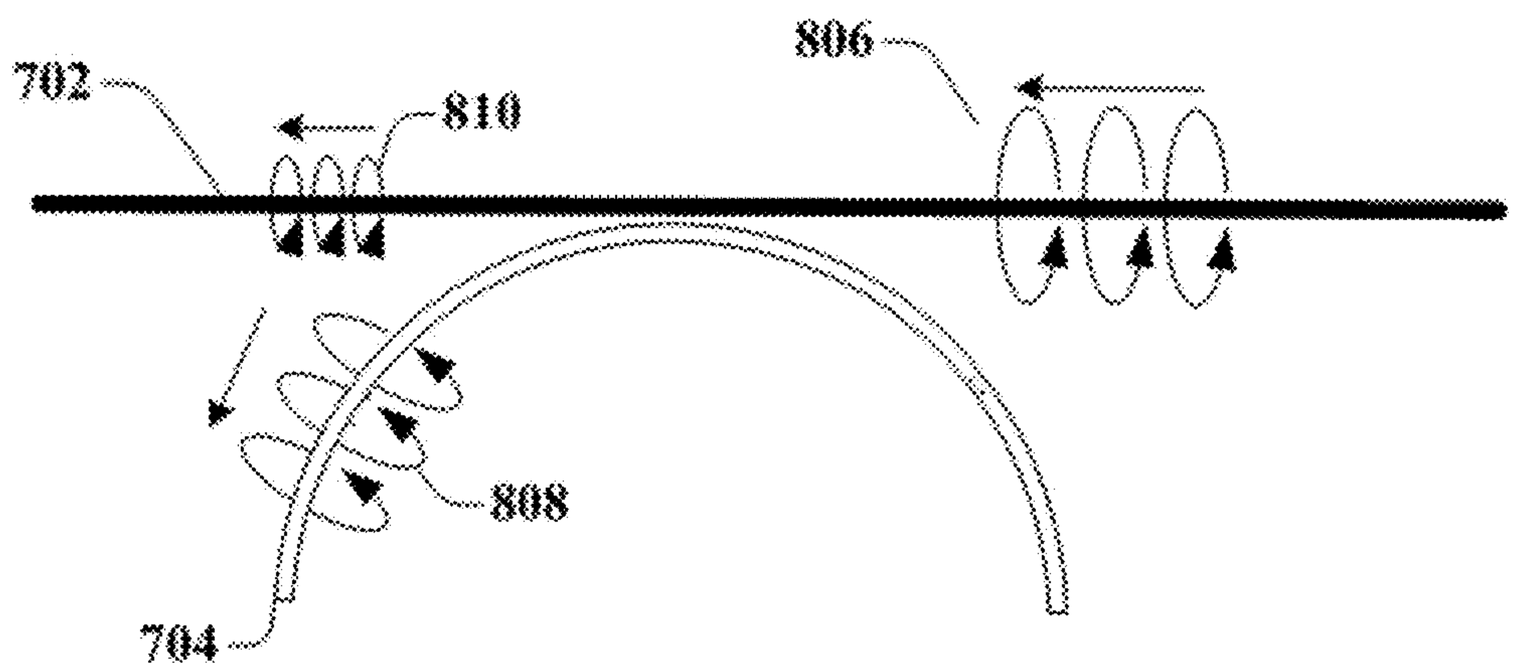

800

FIG. 8

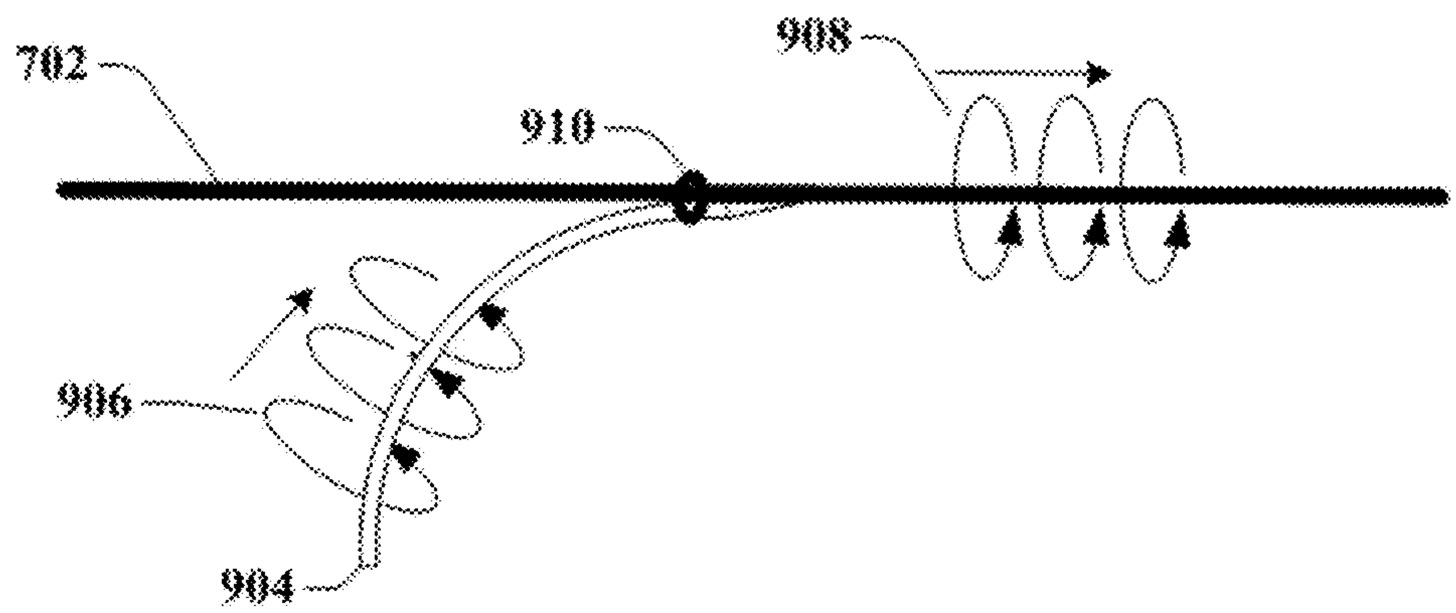

900

FIG. 9A

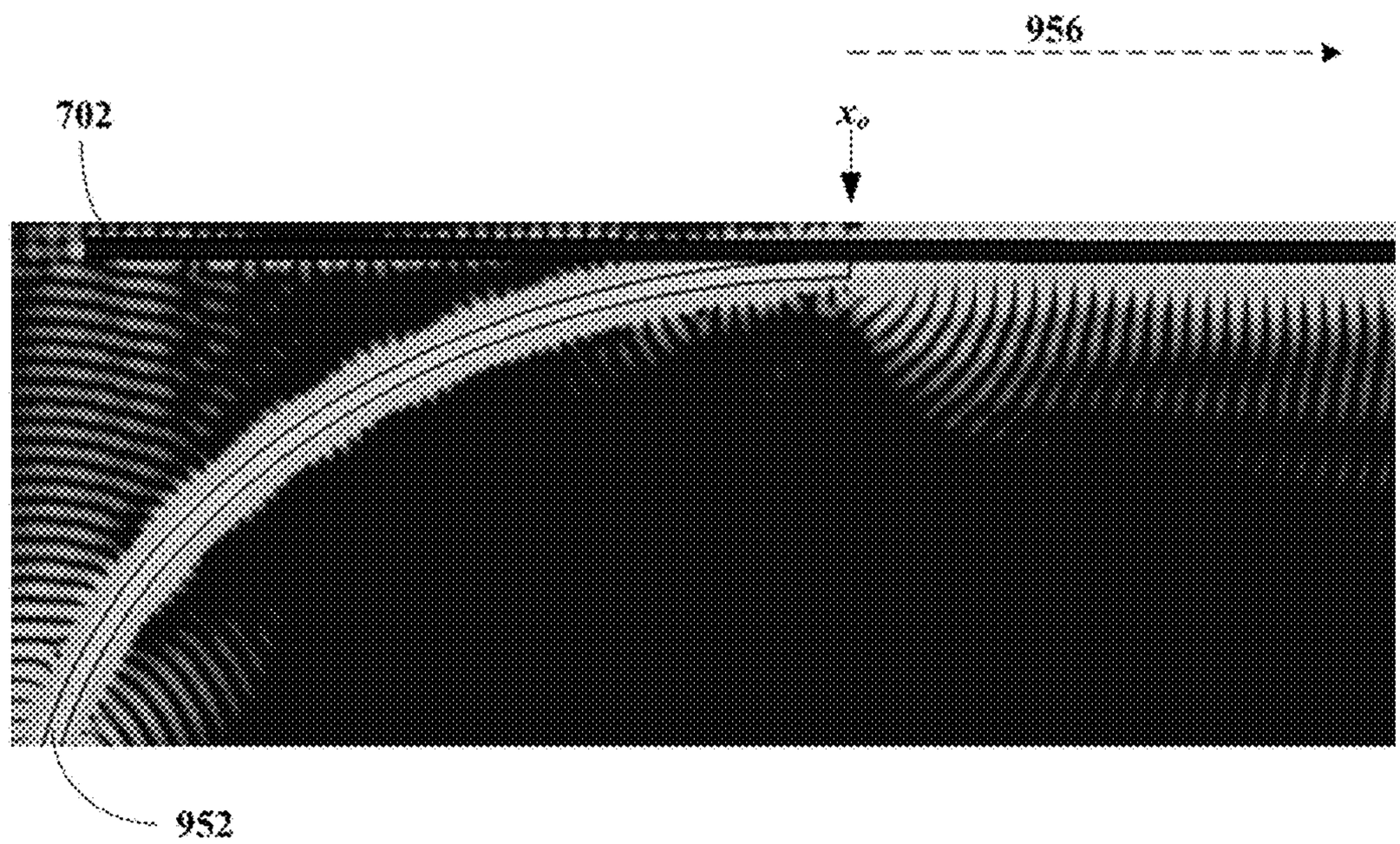

950

FIG. 9B

1000

FIG. 10A

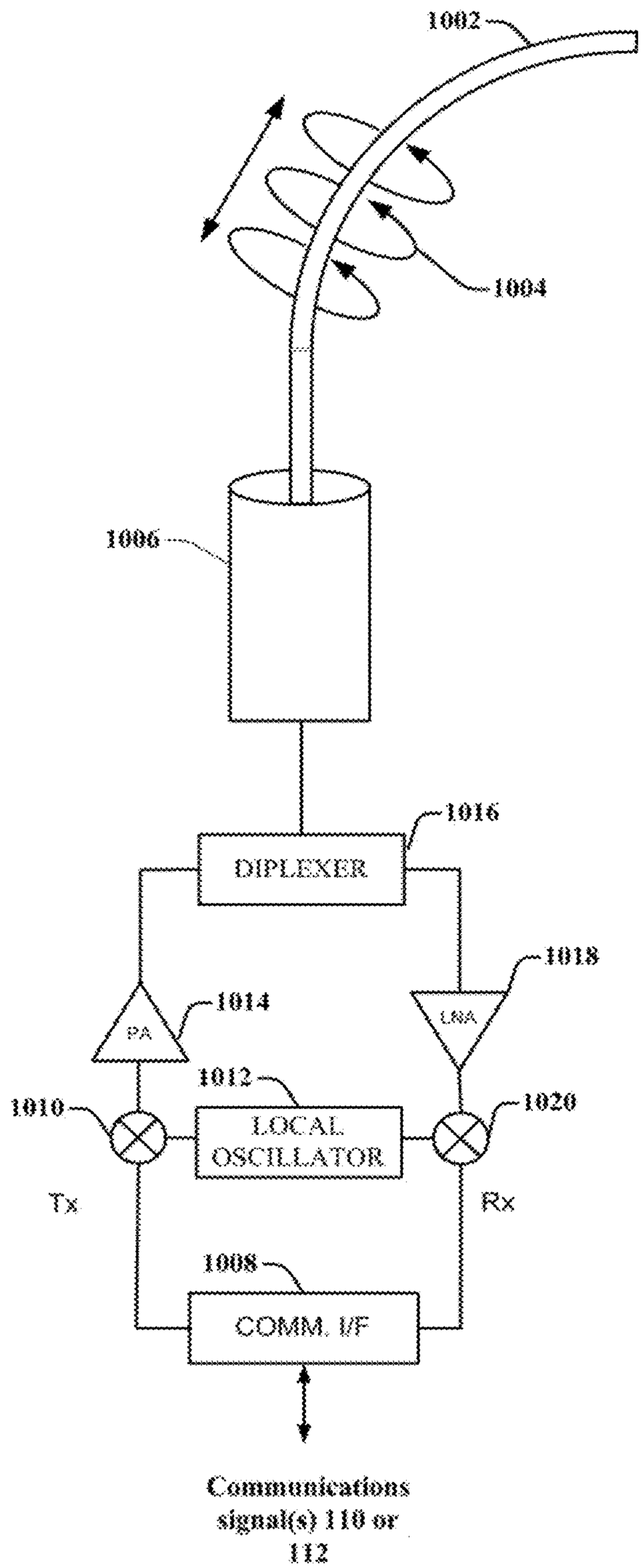
1002
1004
1006
1016
DIPLEXER
1018
LNA
1014
PA
1012
1010
LOCAL OSCILLATOR
1020
Tx
Rx
1008
COMM. I/F
Communications signal(s) 110 or 112

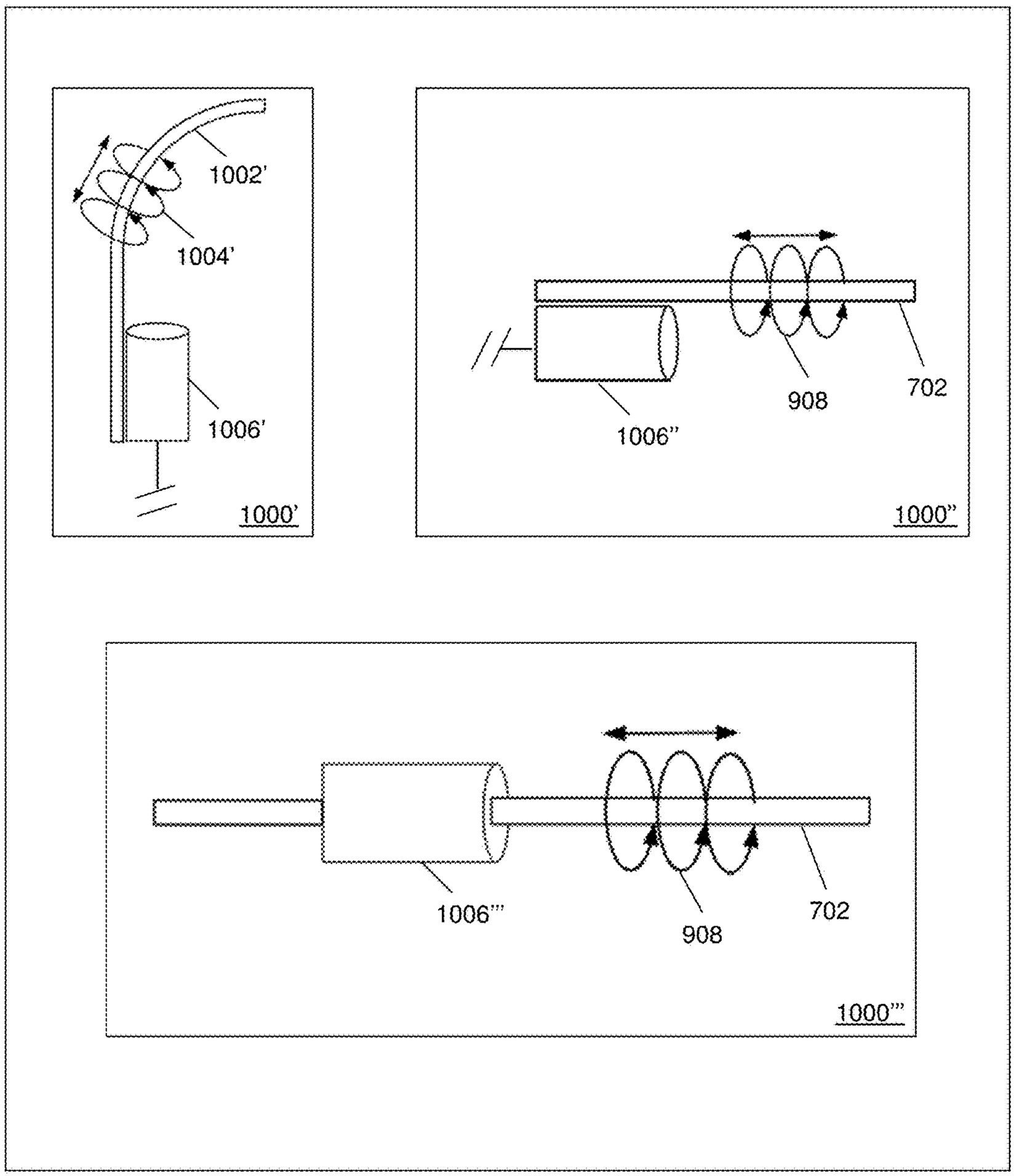

FIG. 10B

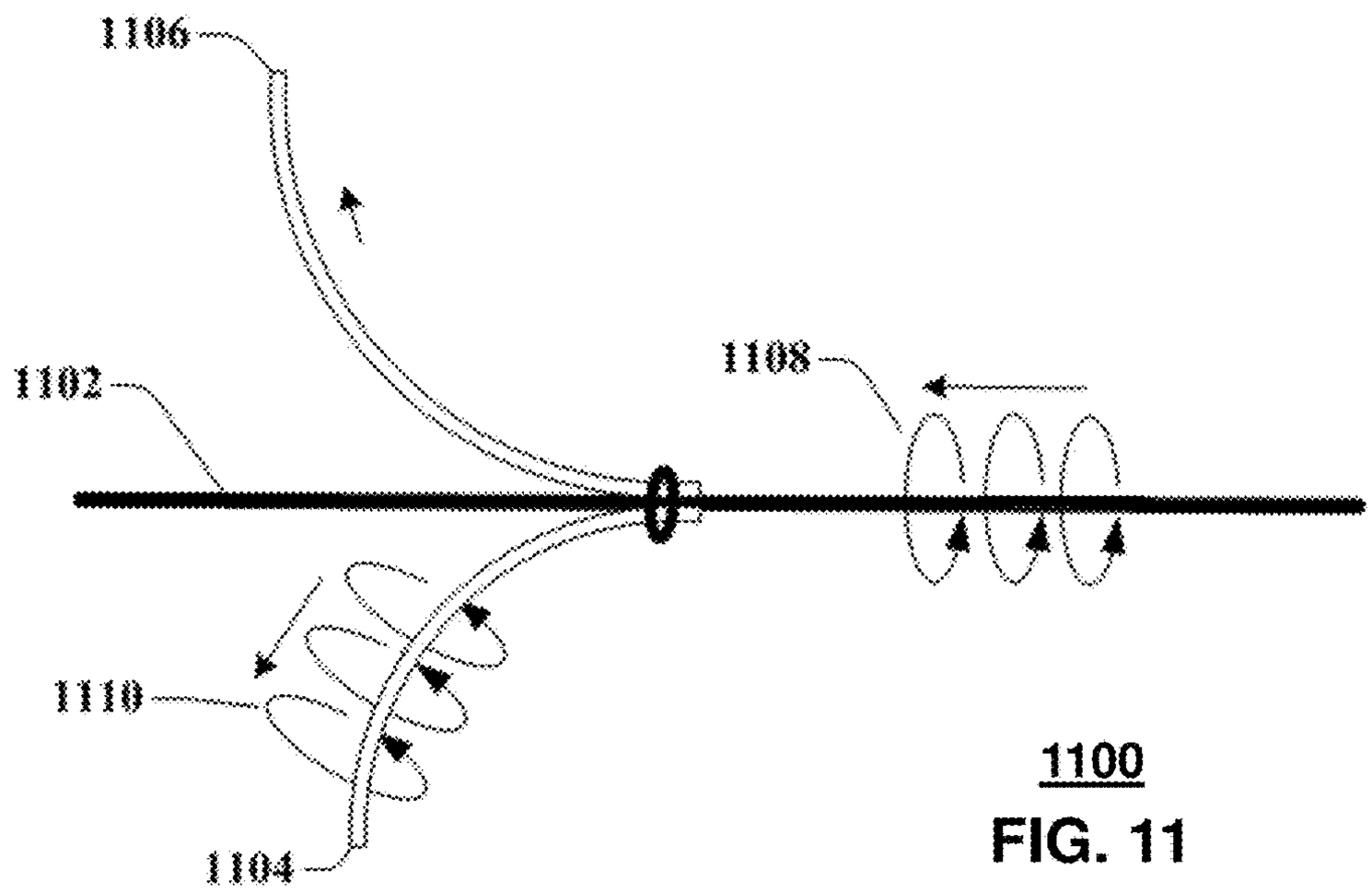

1100

FIG. 11

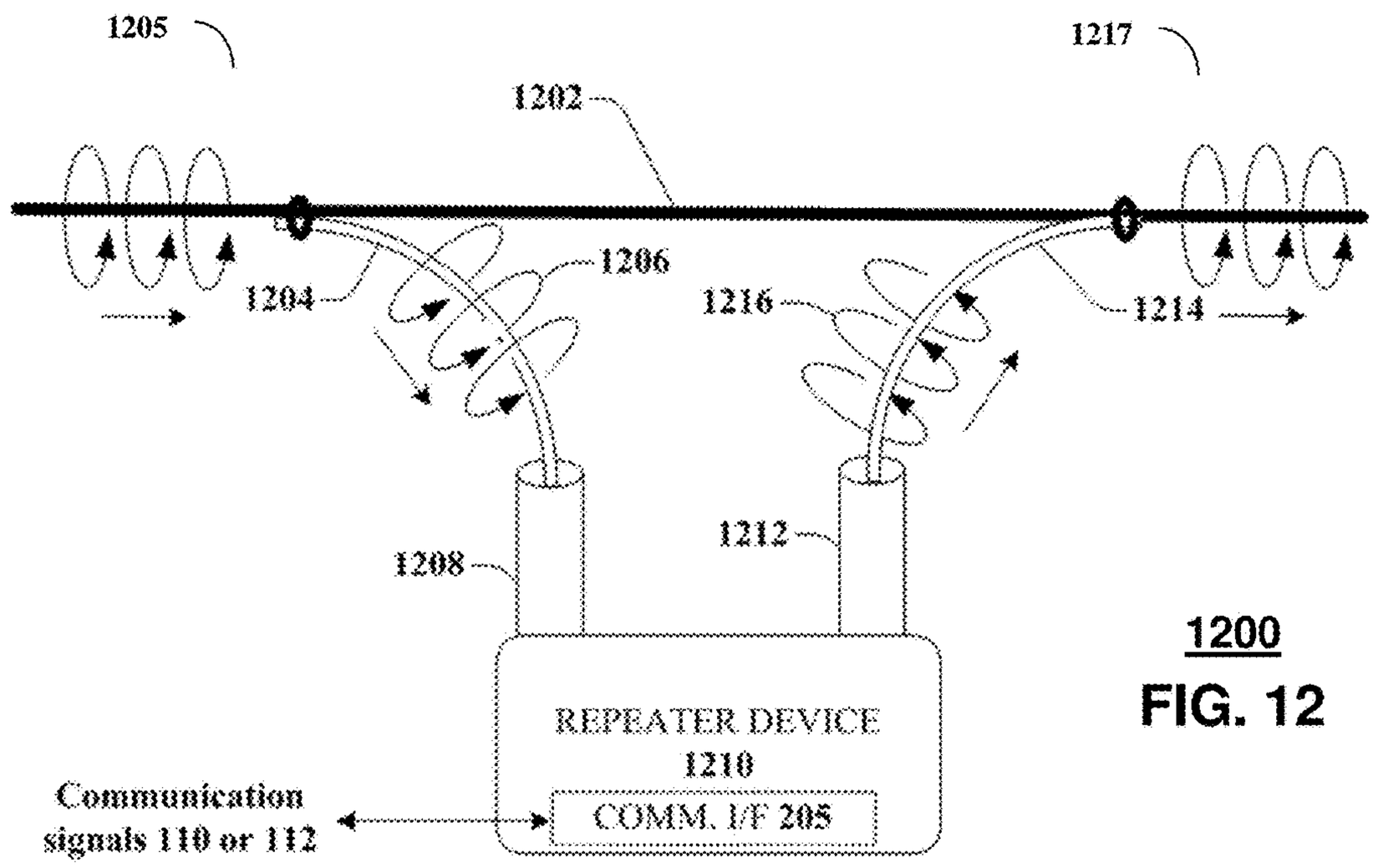

1200

FIG. 12

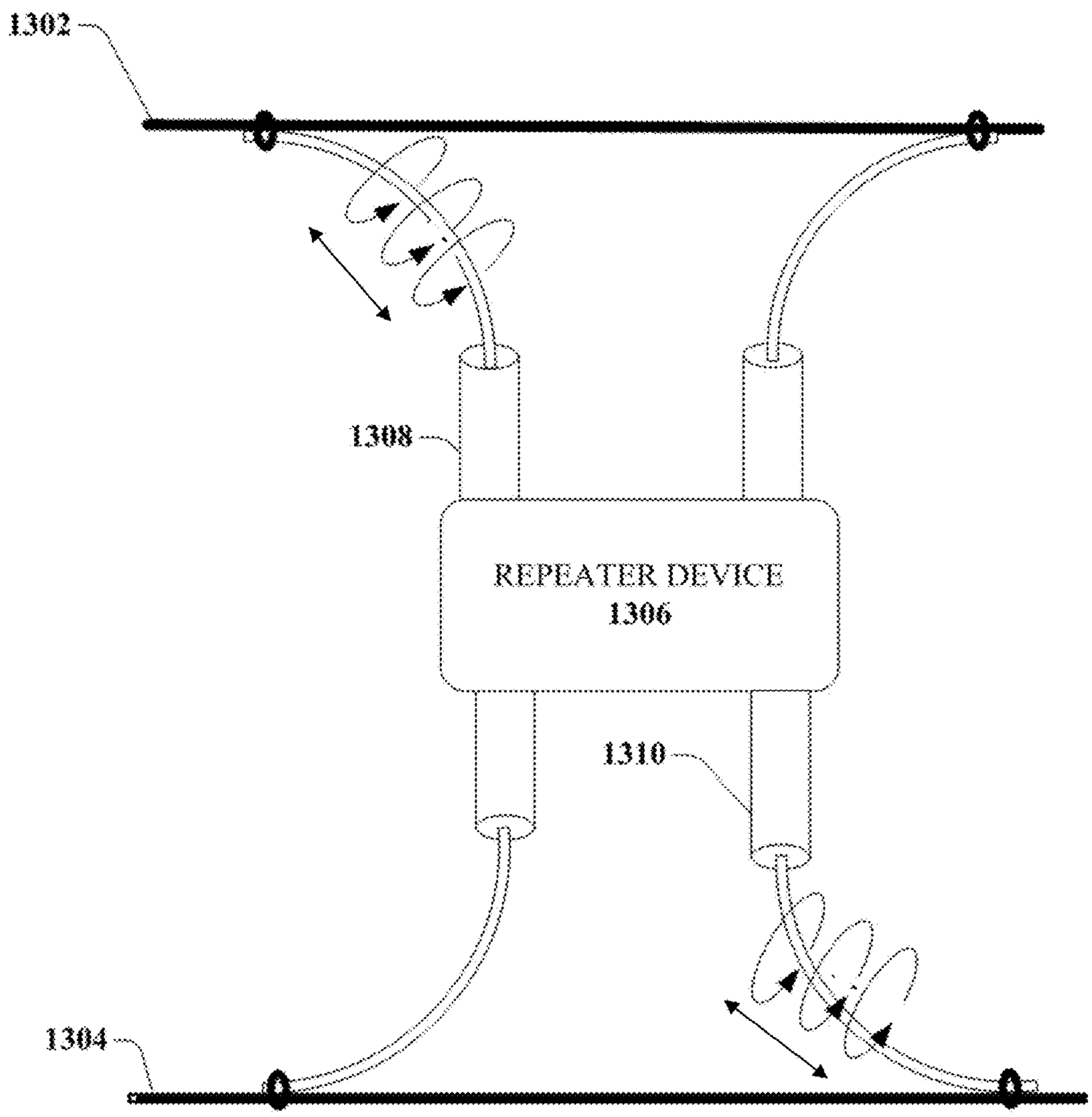

1300

FIG. 13

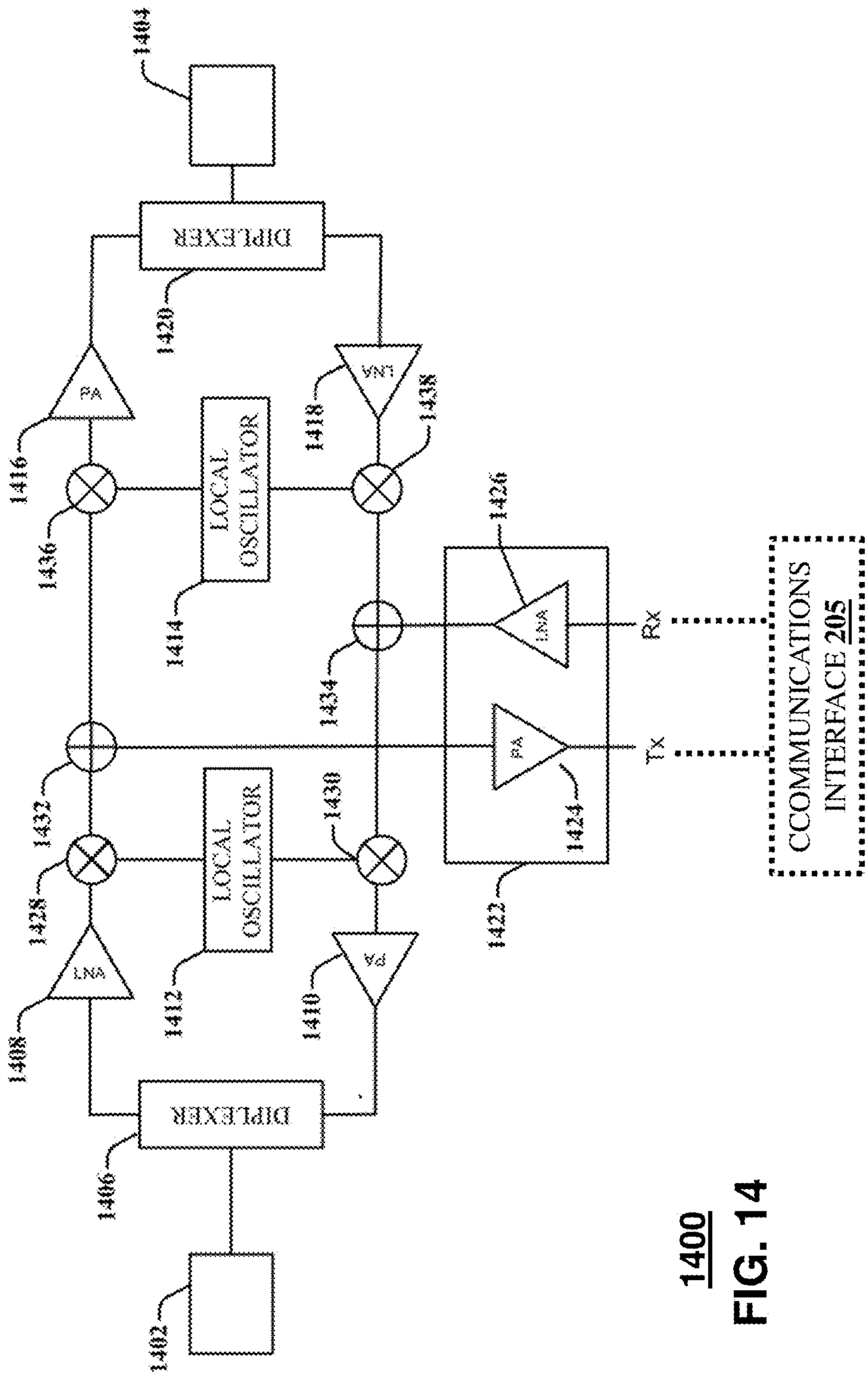
1404
DIPLEXER
1420
PA
1416
1436
LOCAL OSCILLATOR
1414
1418
VNT
1438
1426
LNA
Rx
1434
PA
Tx
1424
1422
1432
1428
LOCAL OSCILLATOR
1412
1430
VG
1410
LNA
1408
DIPLEXER
1406
1402
COMMUNICATIONS INTERFACE 205

1400
FIG. 14

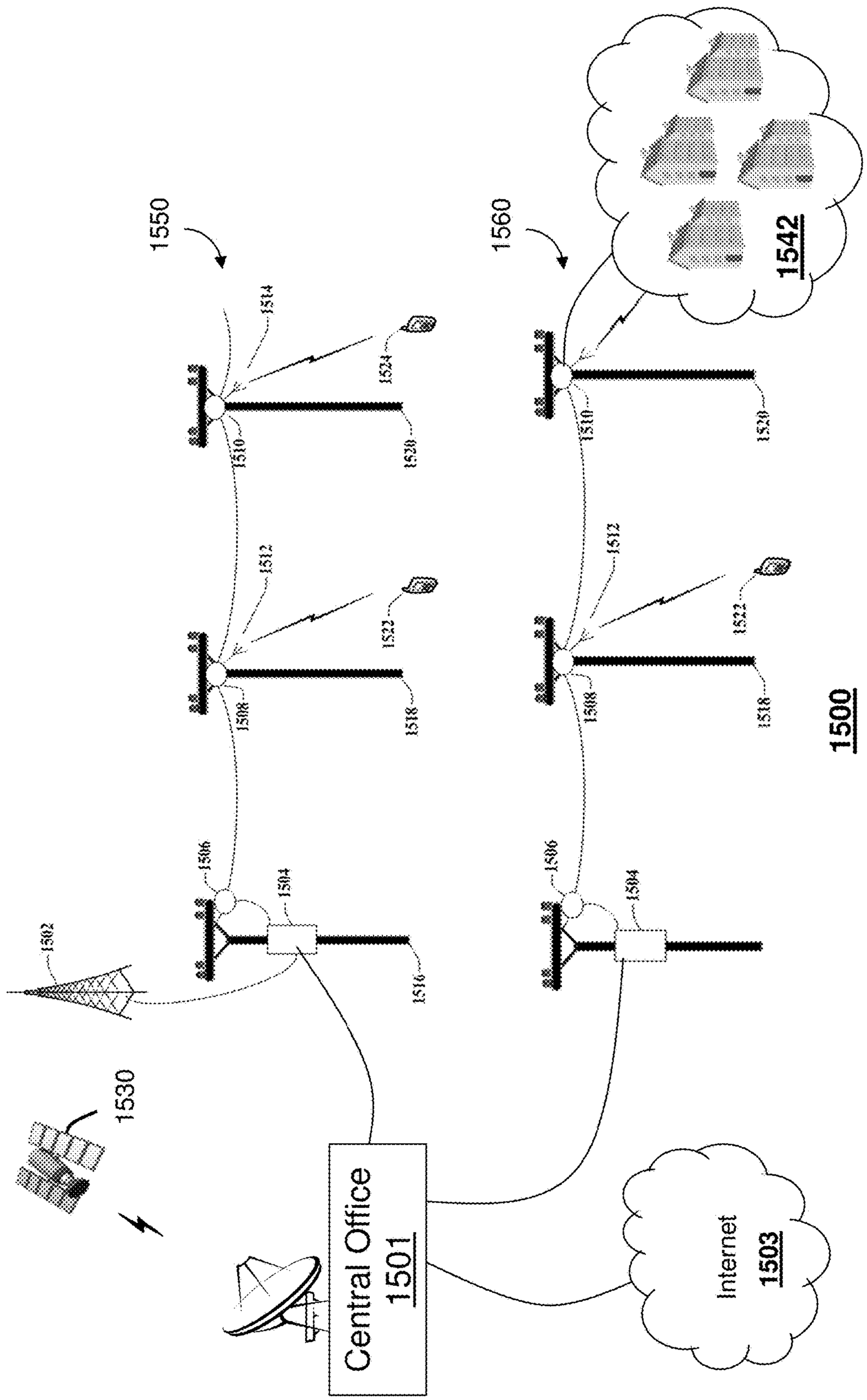
1550
1560
1542
1514
1524
1510
1520
1512
1522
1508
1518
1506
1504
1502
1516
1530
Central Office
1501
Internet
1503

1500
FIG. 15

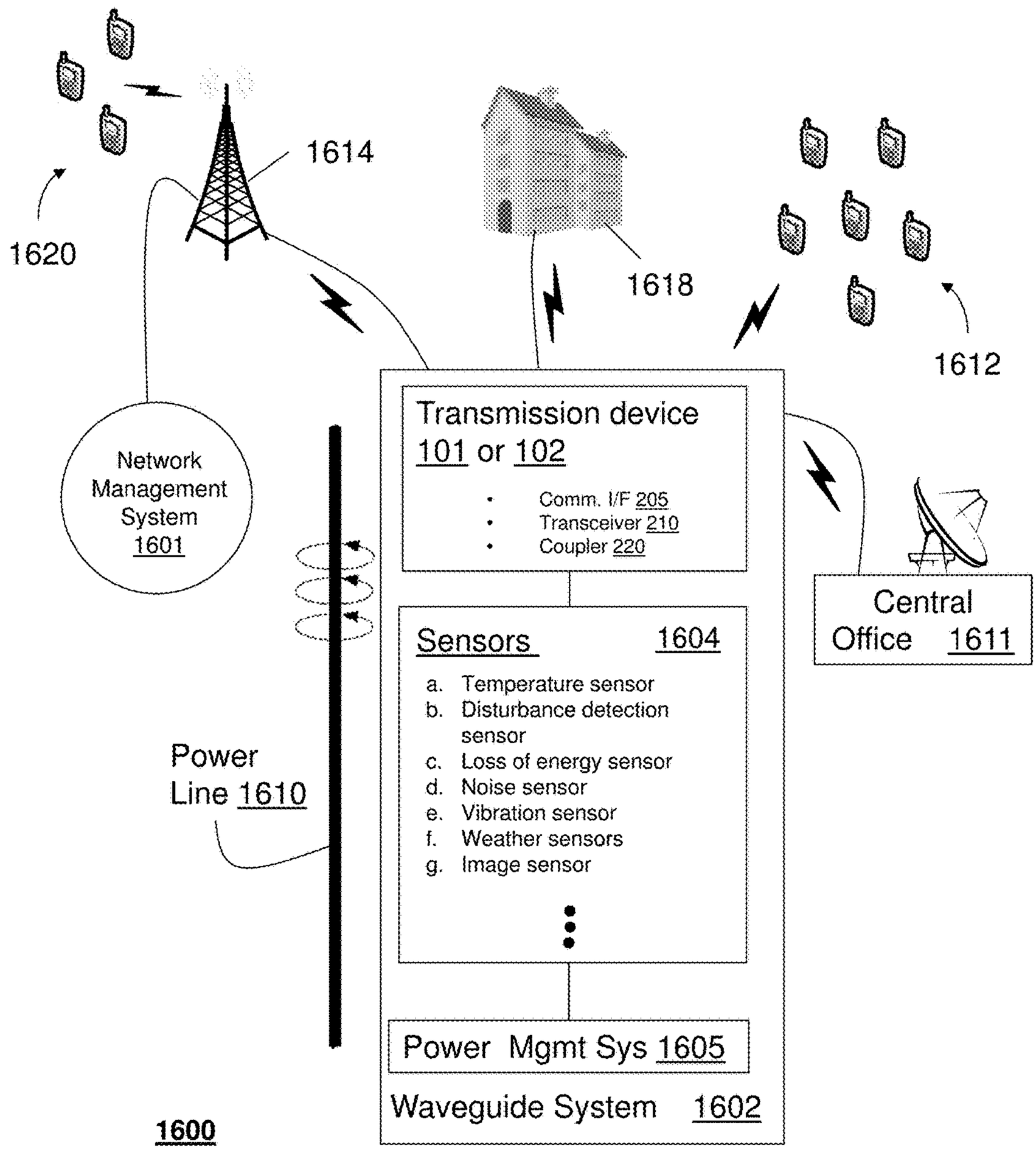
1614
1620
1618
1612
Network Management System 1601
Transmission device 101 or 102
Comm. I/F 205
Transceiver 210
Coupler 220
Central Office 1611
Sensors 1604
a. Temperature sensor
b. Disturbance detection sensor
c. Loss of energy sensor
d. Noise sensor
e. Vibration sensor
f. Weather sensors
g. Image sensor
Power Line 1610
Power Mgmt Sys 1605
Waveguide System 1602
1600

FIG. 16A

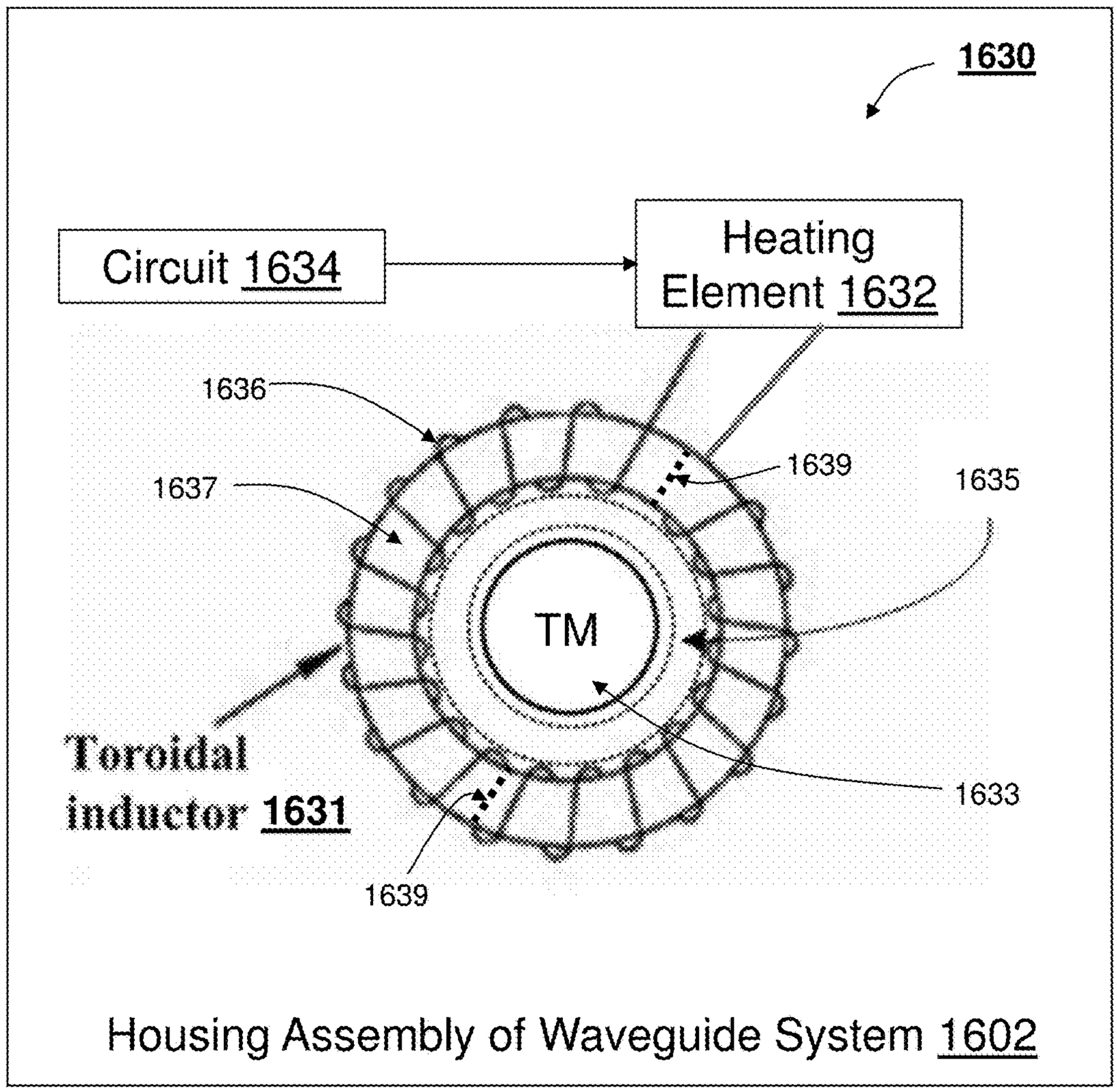
1630
Circuit 1634
Heating Element 1632
1636
1637
1639
1635
TM
Toroidal inductor 1631
1633
1639
Housing Assembly of Waveguide System 1602

FIG. 16B

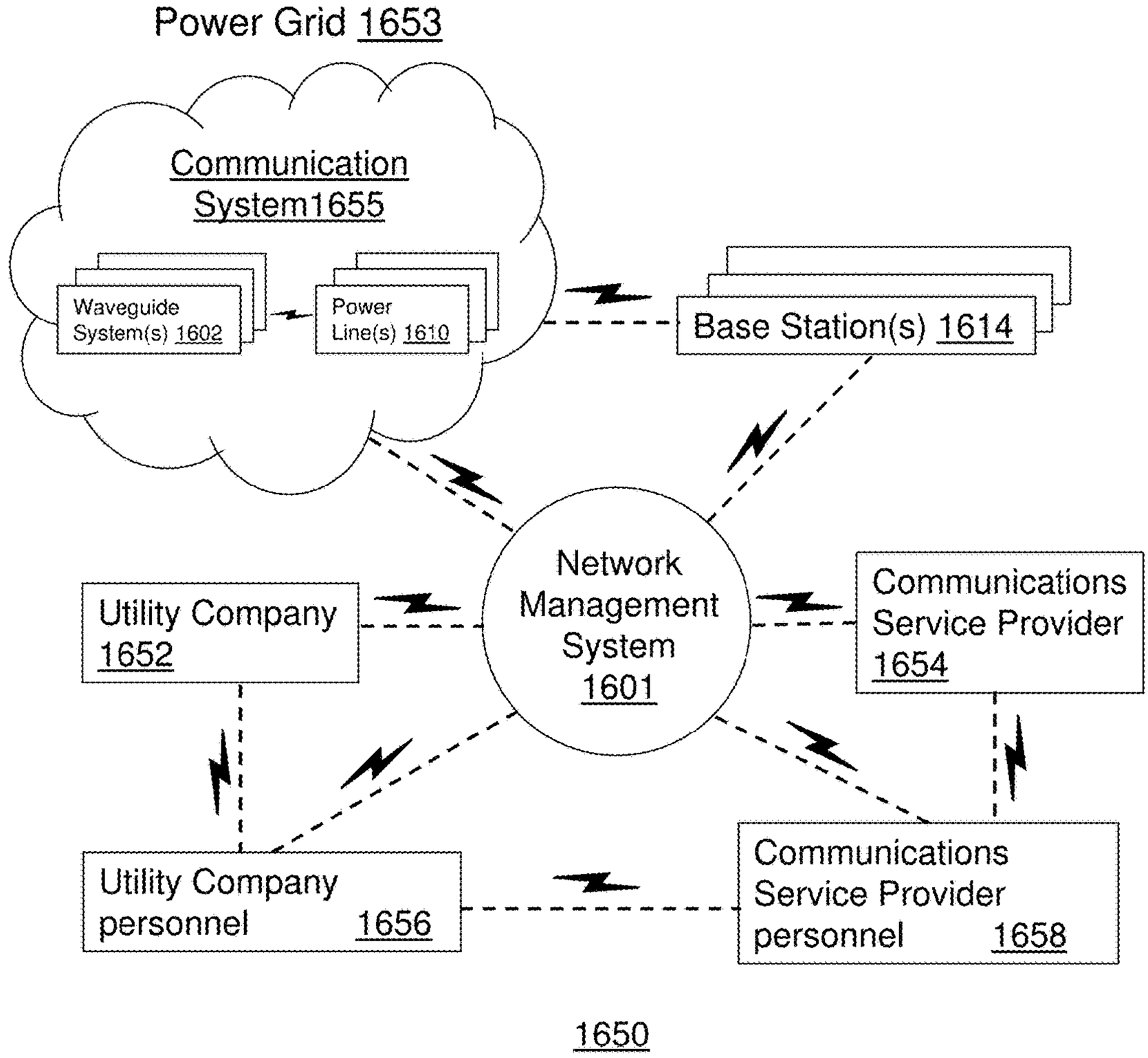
Power Grid 1653
Communication System1655
Waveguide System(s) 1602
Power Line(s) 1610
Base Station(s) 1614
Network Management System 1601
Utility Company 1652
Communications Service Provider 1654
Utility Company personnel 1656
Communications Service Provider personnel 1658
1650

FIG. 16C

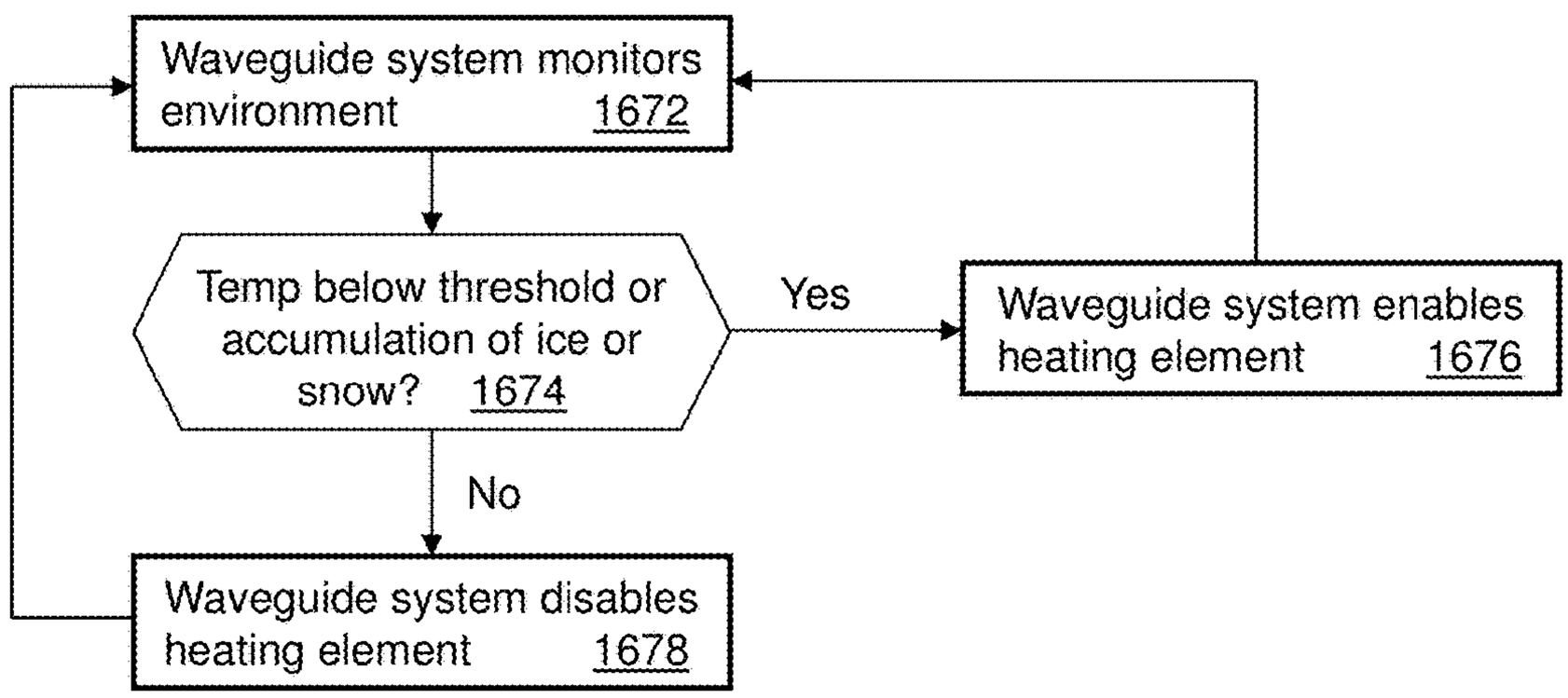
Waveguide system monitors environment 1672
Temp below threshold or accumulation of ice or snow? 1674
Yes
Waveguide system enables heating element 1676
No
Waveguide system disables heating element 1678

1670

FIG. 16D

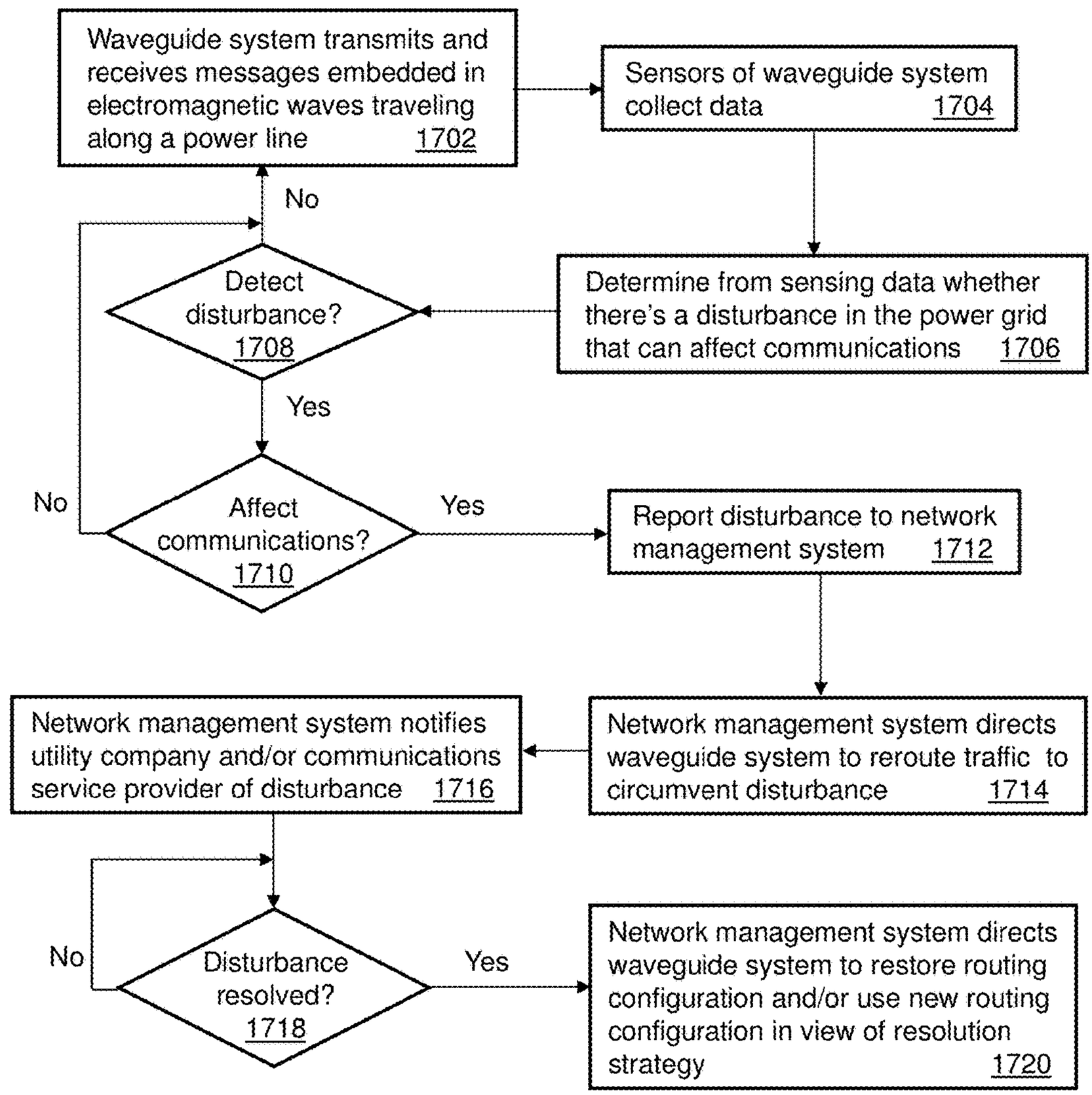
Waveguide system transmits and receives messages embedded in electromagnetic waves traveling along a power line 1702
Sensors of waveguide system collect data 1704
Determine from sensing data whether there's a disturbance in the power grid that can affect communications 1706
Detect disturbance? 1708
No
Yes
Affect communications? 1710
No
Yes
Report disturbance to network management system 1712
Network management system directs waveguide system to reroute traffic to circumvent disturbance 1714
Network management system notifies utility company and/or communications service provider of disturbance 1716
Disturbance resolved? 1718
No
Yes
Network management system directs waveguide system to restore routing configuration and/or use new routing configuration in view of resolution strategy 1720

1700

FIG. 17A

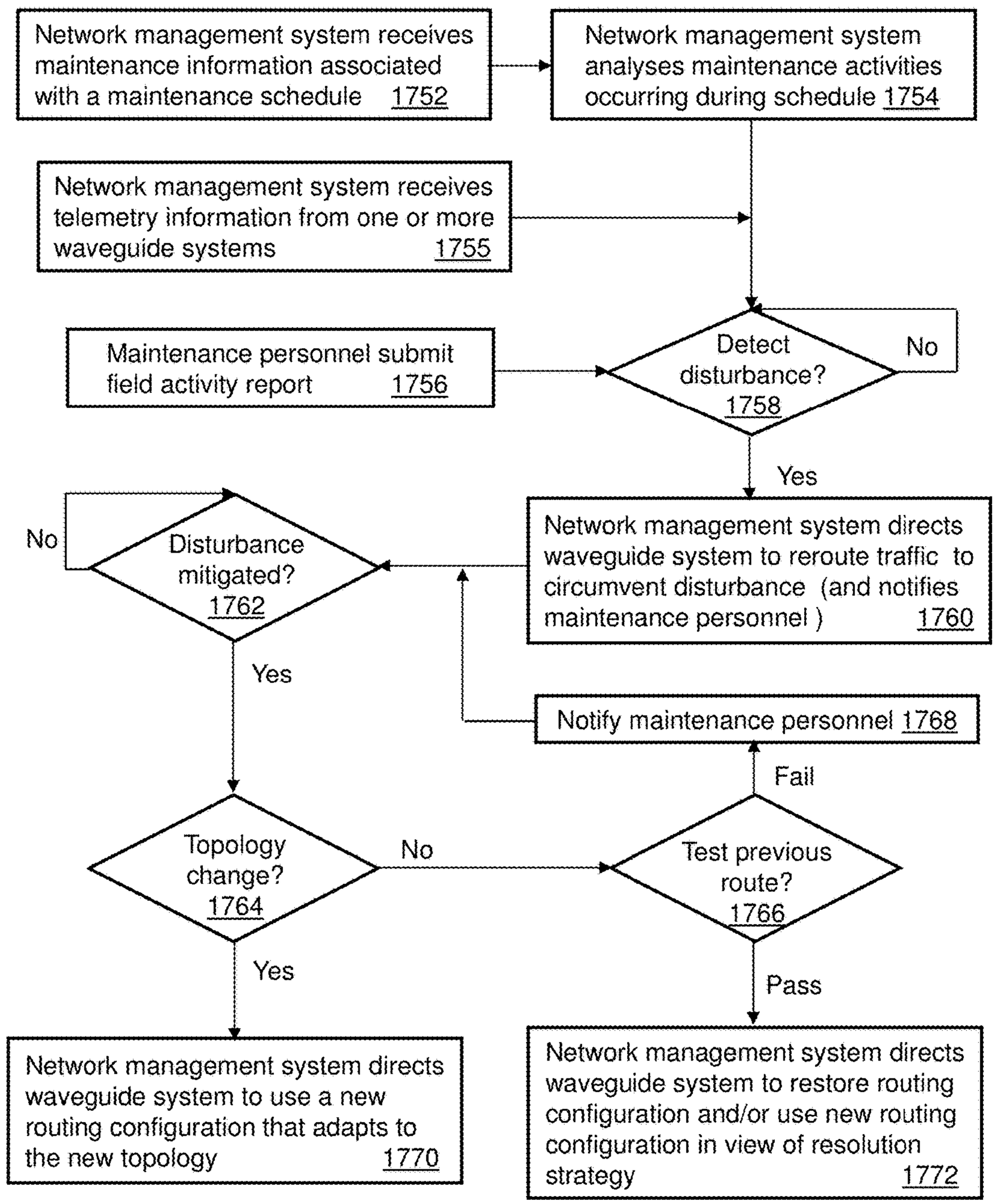
Network management system receives maintenance information associated with a maintenance schedule 1752
Network management system analyses maintenance activities occurring during schedule 1754
Network management system receives telemetry information from one or more waveguide systems 1755
Maintenance personnel submit field activity report 1756
Detect disturbance? 1758
No
Yes
Network management system directs waveguide system to reroute traffic to circumvent disturbance (and notifies maintenance personnel) 1760
No
Disturbance mitigated? 1762
Yes
Notify maintenance personnel 1768
Fail
Topology change? 1764
No
Test previous route? 1766
Yes
Pass
Network management system directs waveguide system to use a new routing configuration that adapts to the new topology 1770
Network management system directs waveguide system to restore routing configuration and/or use new routing configuration in view of resolution strategy 1772

1750

FIG. 17B

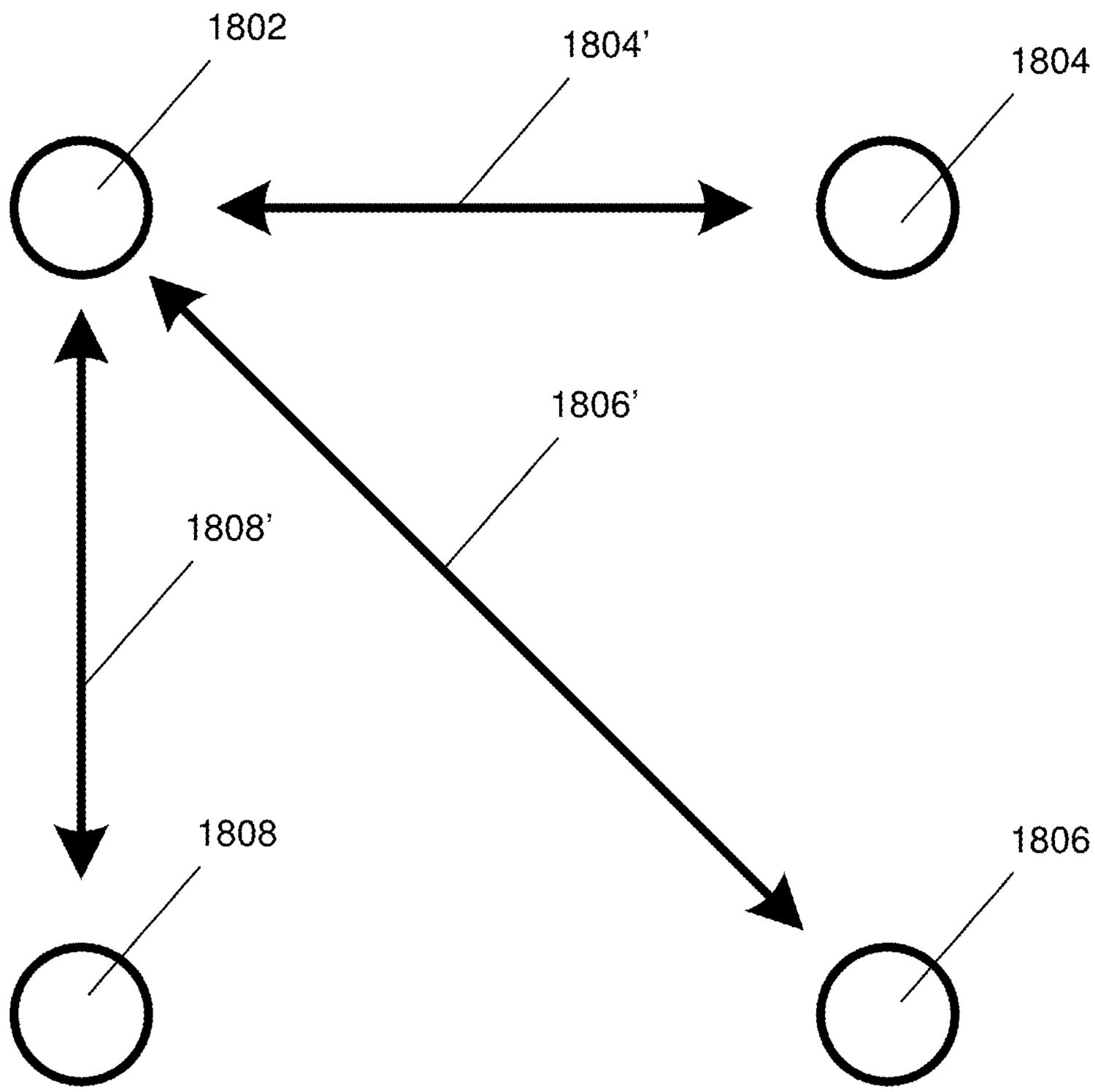

1800

FIG. 18

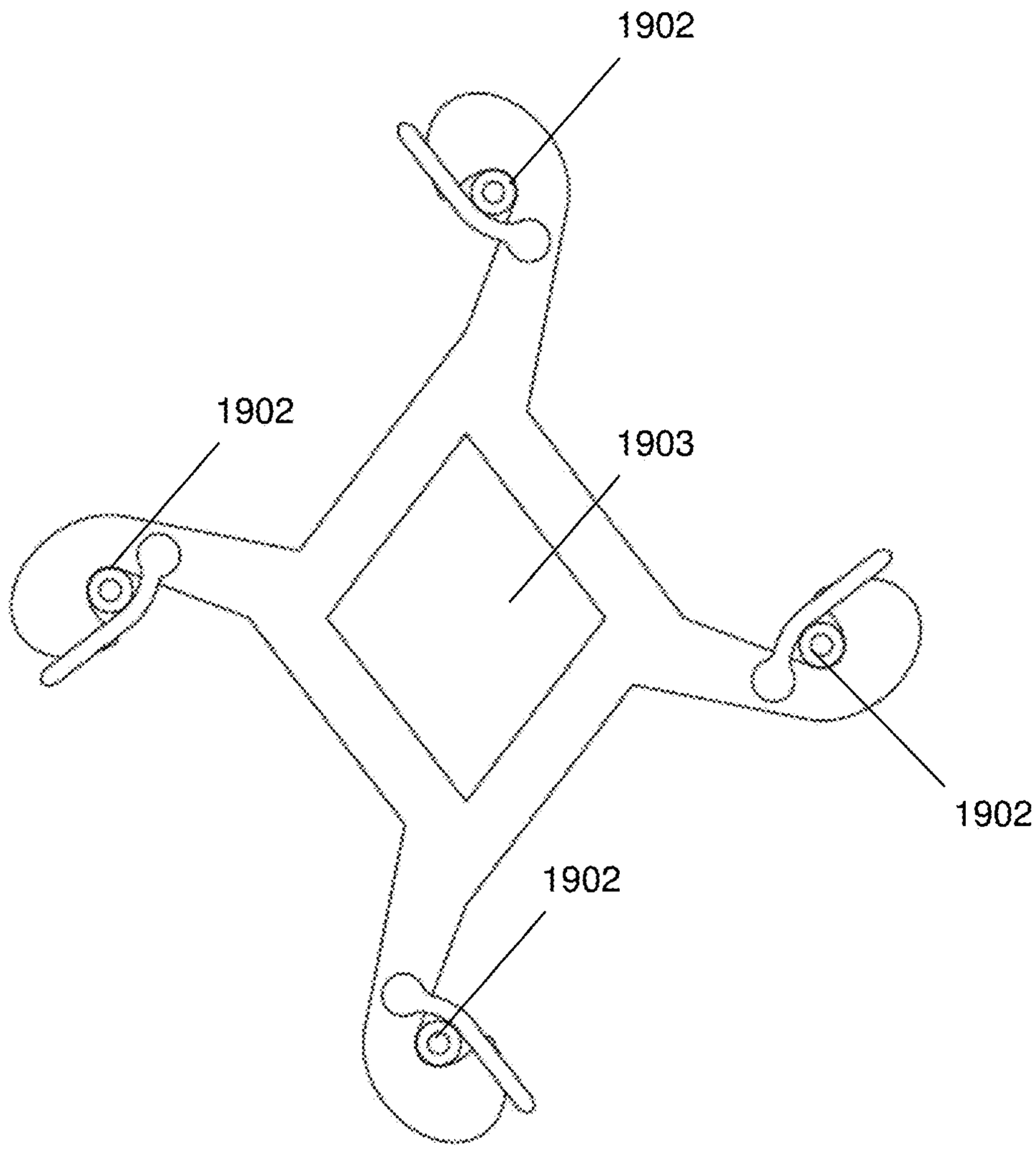

1900

FIG. 19

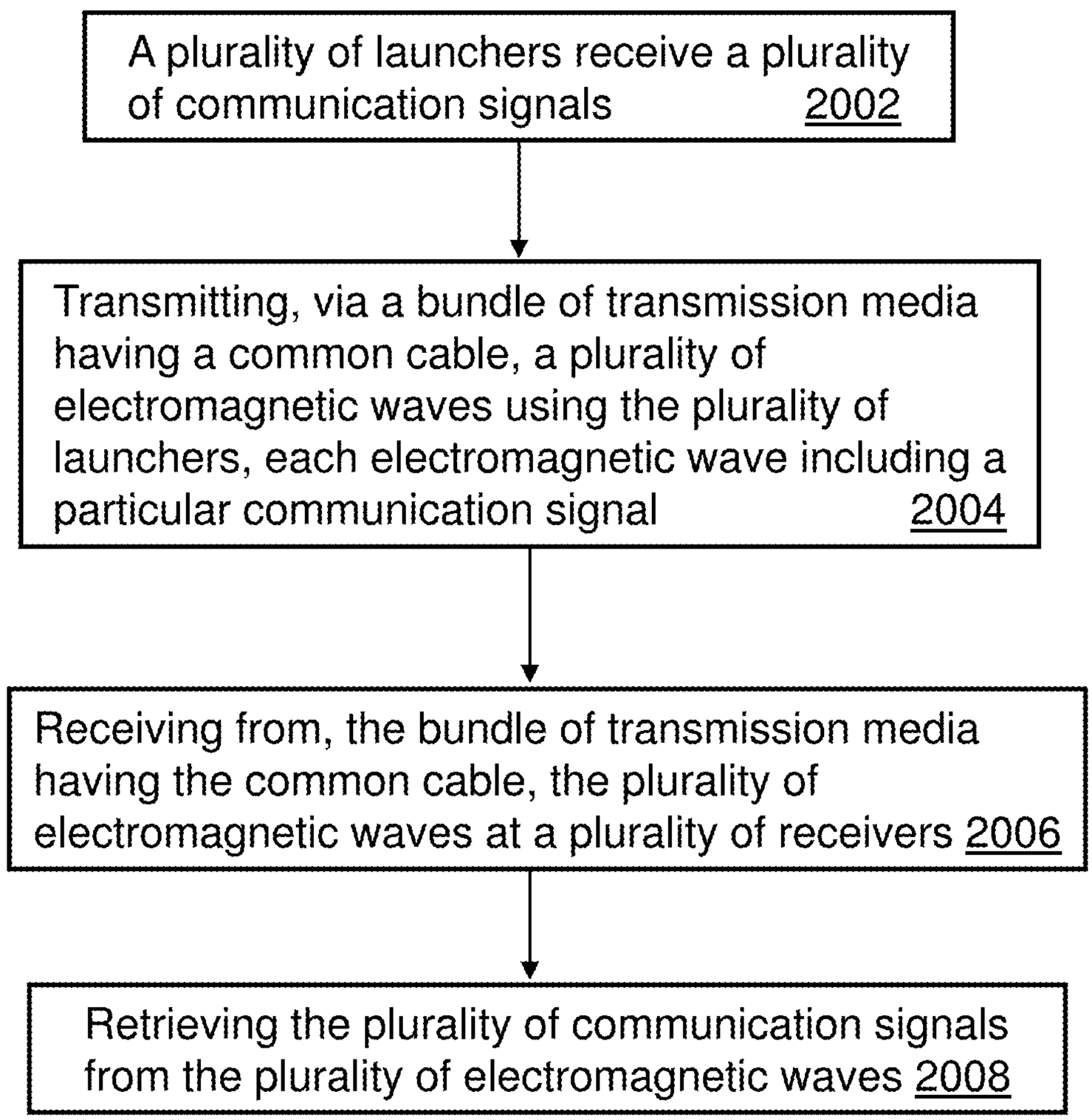
A plurality of launchers receive a plurality of communication signals 2002
Transmitting, via a bundle of transmission media having a common cable, a plurality of electromagnetic waves using the plurality of launchers, each electromagnetic wave including a particular communication signal 2004
Receiving from, the bundle of transmission media having the common cable, the plurality of electromagnetic waves at a plurality of receivers 2006
Retrieving the plurality of communication signals from the plurality of electromagnetic waves 2008

2000

FIG. 20

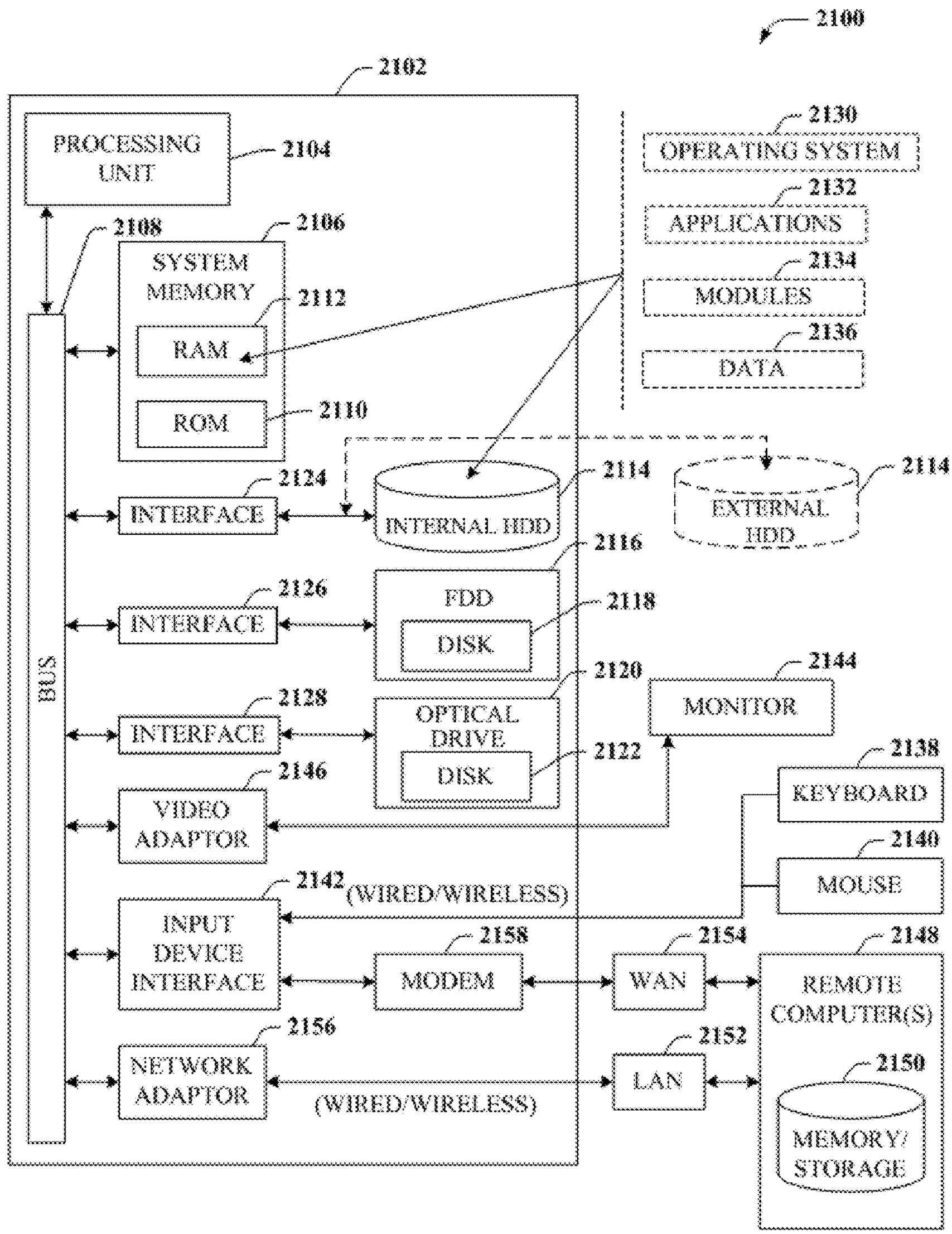
2100
2102
PROCESSING UNIT
2104
2108
2106
SYSTEM MEMORY
2112
RAM
ROM
2110
2130
OPERATING SYSTEM
2132
APPLICATIONS
2134
MODULES
2136
DATA
2124
INTERFACE
INTERNAL HDD
2114
EXTERNAL HDD
2114
2116
2126
INTERFACE
FDD
DISK
2118
BUS
2120
2128
INTERFACE
OPTICAL DRIVE
DISK
2122
2144
MONITOR
2146
VIDEO ADAPTOR
2138
KEYBOARD
2140
MOUSE
2142
(WIRED/WIRELESS)
INPUT DEVICE INTERFACE
2158
MODEM
2154
WAN
2148
REMOTE COMPUTER(S)
2156
NETWORK ADAPTOR
(WIRED/WIRELESS)
2152
LAN
2150
MEMORY/ STORAGE

FIG. 21

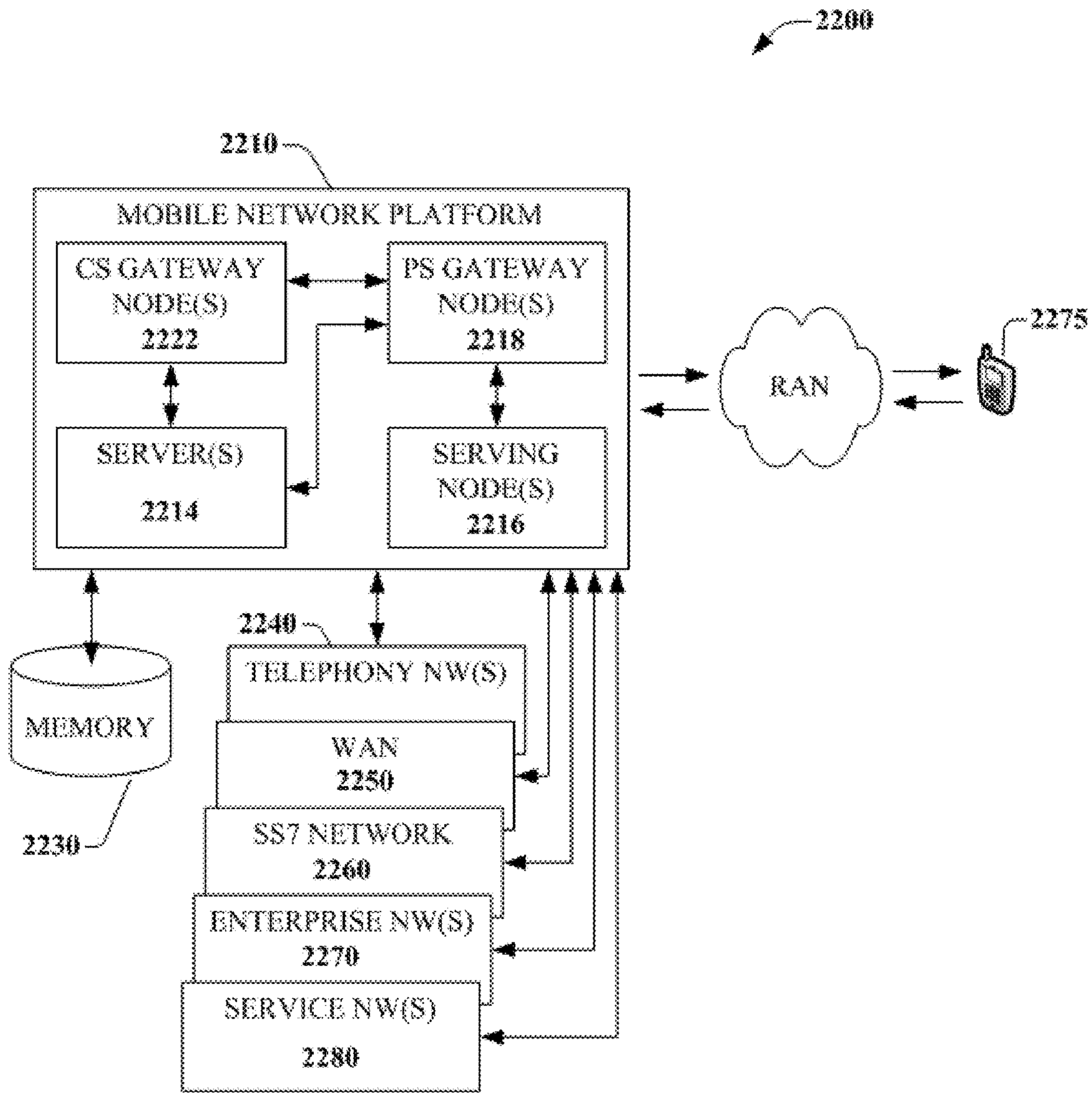
2200
2210
MOBILE NETWORK PLATFORM
CS GATEWAY NODE(S) 2222
PS GATEWAY NODE(S) 2218
SERVER(S) 2214
SERVING NODE(S) 2216
RAN
2275
2240
TELEPHONY NW(S)
MEMORY
WAN 2250
SS7 NETWORK 2260
ENTERPRISE NW(S) 2270
SERVICE NW(S) 2280
2230

FIG. 22

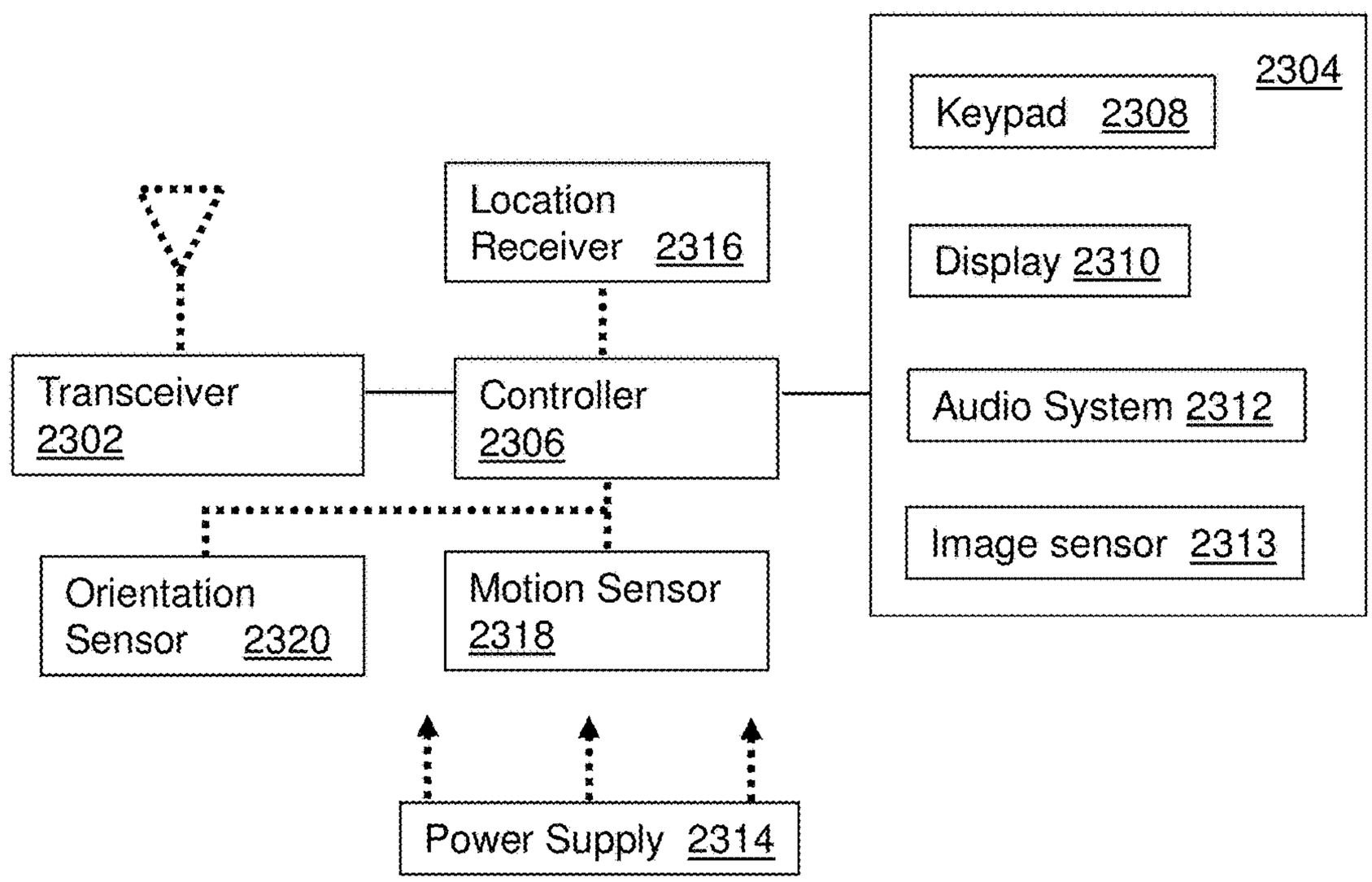
2304
Keypad 2308
Display 2310
Audio System 2312
Image sensor 2313
Location Receiver 2316
Transceiver 2302
Controller 2306
Orientation Sensor 2320
Motion Sensor 2318
Power Supply 2314

2300

FIG. 23

METHOD AND APPARATUS FOR EXCHANGING COMMUNICATION SIGNALS

CROSS-REFERENCE TO RELATED APPLICATIONS

This application is a Continuation of and claims priority to U.S. patent application Ser. No. 14/815,019, filed Jul. 31, 2015. The contents of the foregoing are hereby incorporated by reference into this application as if set forth herein in full.

FIELD OF THE DISCLOSURE

The subject disclosure relates to guided electromagnetic wave communications.

BACKGROUND

As smart phones and other portable devices increasingly become ubiquitous, and data usage increases, macrocell base station devices and existing wireless infrastructure in turn require higher bandwidth capability in order to address the increased demand. To provide additional mobile bandwidth, small cell deployment is being pursued, with microcells and picocells providing coverage for much smaller areas than traditional macrocells.

In addition, most homes and businesses have grown to rely on broadband data access for services such as voice, video and Internet browsing, etc. Broadband access networks include satellite, 4G or 5G wireless, power line communication, fiber, cable, and telephone networks.

BRIEF DESCRIPTION OF THE DRAWINGS

Reference will now be made to the accompanying drawings, which are not necessarily drawn to scale, and wherein:

FIG. **1** is a block diagram illustrating an example, non-limiting embodiment of a guided-wave communications system in accordance with various aspects described herein.

FIG. **2** is a block diagram illustrating an example, non-limiting embodiment of a transmission device in accordance with various aspects described herein.

FIG. **3** is a graphical diagram illustrating an example, non-limiting embodiment of an electromagnetic field distribution in accordance with various aspects described herein.

FIG. **4** is a graphical diagram illustrating an example, non-limiting embodiment of an electromagnetic field distribution in accordance with various aspects described herein.

FIG. **5**A is a graphical diagram illustrating an example, non-limiting embodiment of a frequency response in accordance with various aspects described herein.

FIG. **5**B is a graphical diagram illustrating example, non-limiting embodiments of a longitudinal cross-section of an insulated wire depicting fields of guided electromagnetic waves at various operating frequencies in accordance with various aspects described herein.

FIG. **6** is a graphical diagram illustrating an example, non-limiting embodiment of an electromagnetic field distribution in accordance with various aspects described herein.

FIG. **7** is a block diagram illustrating an example, non-limiting embodiment of an arc coupler in accordance with various aspects described herein.

FIG. **8** is a block diagram illustrating an example, non-limiting embodiment of an arc coupler in accordance with various aspects described herein.

FIG. **9**A is a block diagram illustrating an example, non-limiting embodiment of a stub coupler in accordance with various aspects described herein.

FIG. **9**B is a diagram illustrating an example, non-limiting embodiment of an electromagnetic distribution in accordance with various aspects described herein.

FIGS. **10**A and **10**B are block diagrams illustrating example, non-limiting embodiments of couplers and transceivers in accordance with various aspects described herein.

FIG. **11** is a block diagram illustrating an example, non-limiting embodiment of a dual stub coupler in accordance with various aspects described herein.

FIG. **12** is a block diagram illustrating an example, non-limiting embodiment of a repeater system in accordance with various aspects described herein.

FIG. **13** illustrates a block diagram illustrating an example, non-limiting embodiment of a bidirectional repeater in accordance with various aspects described herein.

FIG. **14** is a block diagram illustrating an example, non-limiting embodiment of a waveguide system in accordance with various aspects described herein.

FIG. **15** is a block diagram illustrating an example, non-limiting embodiment of a guided-wave communications system in accordance with various aspects described herein.

FIGS. **16**A, **16**B and **16**C are block diagrams illustrating an example, non-limiting embodiment of a system for managing a communication system in accordance with various aspects described herein.

FIG. **16**D illustrates a flow diagram of an example, non-limiting embodiment of a method in accordance with various aspects described herein.

FIG. **17**A illustrates a flow diagram of an example, non-limiting embodiment of a method for detecting and mitigating disturbances occurring in a communication network of the system of FIGS. **16**A, **16**B, and **16**C.

FIG. **17**B illustrates a flow diagram of an example, non-limiting embodiment of a method for detecting and mitigating disturbances occurring in a communication network of the system of FIGS. **16**A, **16**B, and **16**C.

FIG. **18** illustrates a block diagram illustrating an example, non-limiting embodiment of a cross-sectional view of transmission media in accordance with various aspects described herein.

FIG. **19** illustrates a block diagram illustrating an example, non-limiting embodiment of spacing device for coupling to the transmission media in accordance with various aspects described herein.

FIG. **20** illustrates a flow diagram of an example, non-limiting embodiment of a method in accordance with various aspects described herein.

FIG. **21** is a block diagram of an example, non-limiting embodiment of a computing environment in accordance with various aspects described herein.

FIG. **22** is a block diagram of an example, non-limiting embodiment of a mobile network platform in accordance with various aspects described herein.

FIG. **23** is a block diagram of an example, non-limiting embodiment of a communication device in accordance with various aspects described herein.

DETAILED DESCRIPTION

One or more embodiments are now described with reference to the drawings, wherein like reference numerals are used to refer to like elements throughout. In the following

description, for purposes of explanation, numerous details are set forth in order to provide a thorough understanding of the various embodiments. It is evident, however, that the various embodiments can be practiced without these details (and without applying to any particular networked environment or standard).

In an embodiment, a guided wave communication system is presented for sending and receiving communication signals such as data or other signaling via guided electromagnetic waves. The guided electromagnetic waves include, for example, surface waves or other electromagnetic waves that are bound to or guided by a transmission medium. It will be appreciated that a variety of transmission media can be utilized with guided wave communications without departing from example embodiments. Examples of such transmission media can include one or more of the following, either alone or in one or more combinations: wires, whether insulated or not, and whether single-stranded or multi-stranded; conductors of other shapes or configurations including wire bundles, cables, rods, rails, pipes; non-conductors such as dielectric pipes, rods, rails, or other dielectric members; combinations of conductors and dielectric materials; or other guided wave transmission media.

The inducement of guided electromagnetic waves on a transmission medium can be independent of any electrical potential, charge or current that is injected or otherwise transmitted through the transmission medium as part of an electrical circuit. For example, in the case where the transmission medium is a wire, it is to be appreciated that while a small current in the wire may be formed in response to the propagation of the guided waves along the wire, this can be due to the propagation of the electromagnetic wave along the wire surface, and is not formed in response to electrical potential, charge or current that is injected into the wire as part of an electrical circuit. The electromagnetic waves traveling on the wire therefore do not require a circuit to propagate along the wire surface. The wire therefore is a single wire transmission line that is not part of a circuit. Also, in some embodiments, a wire is not necessary, and the electromagnetic waves can propagate along a single line transmission medium that is not a wire.

More generally, "guided electromagnetic waves" or "guided waves" as described by the subject disclosure are affected by the presence of a physical object that is at least a part of the transmission medium (e.g., a bare wire or other conductor, a dielectric, an insulated wire, a conduit or other hollow element, a bundle of insulated wires that is coated, covered or surrounded by a dielectric or insulator or other wire bundle, or another form of solid, liquid or otherwise non-gaseous transmission medium) so as to be at least partially bound to or guided by the physical object and so as to propagate along a transmission path of the physical object. Such a physical object can operate as at least a part of a transmission medium that guides, by way of an interface of the transmission medium (e.g., an outer surface, inner surface, an interior portion between the outer and the inner surfaces or other boundary between elements of the transmission medium), the propagation of guided electromagnetic waves, which in turn can carry energy, data and/or other signals along the transmission path from a sending device to a receiving device.

Unlike free space propagation of wireless signals such as unguided (or unbounded) electromagnetic waves that decrease in intensity inversely by the square of the distance traveled by the unguided electromagnetic waves, guided electromagnetic waves can propagate along a transmission medium with less loss in magnitude per unit distance than experienced by unguided electromagnetic waves.

Unlike electrical signals, guided electromagnetic waves can propagate from a sending device to a receiving device without requiring a separate electrical return path between the sending device and the receiving device. As a consequence, guided electromagnetic waves can propagate from a sending device to a receiving device along a transmission medium having no conductive components (e.g., a dielectric strip), or via a transmission medium having no more than a single conductor (e.g., a single bare wire or insulated wire). Even if a transmission medium includes one or more conductive components and the guided electromagnetic waves propagating along the transmission medium generate currents that flow in the one or more conductive components in a direction of the guided electromagnetic waves, such guided electromagnetic waves can propagate along the transmission medium from a sending device to a receiving device without requiring a flow of opposing currents on an electrical return path between the sending device and the receiving device.

In a non-limiting illustration, consider electrical systems that transmit and receive electrical signals between sending and receiving devices by way of conductive media. Such systems generally rely on electrically separate forward and return paths. For instance, consider a coaxial cable having a center conductor and a ground shield that are separated by an insulator. Typically, in an electrical system a first terminal of a sending (or receiving) device can be connected to the center conductor, and a second terminal of the sending (or receiving) device can be connected to the ground shield. If the sending device injects an electrical signal in the center conductor via the first terminal, the electrical signal will propagate along the center conductor causing forward currents in the center conductor, and return currents in the ground shield. The same conditions apply for a two terminal receiving device.

In contrast, consider a guided wave communication system such as described in the subject disclosure, which can utilize different embodiments of a transmission medium (including among others a coaxial cable) for transmitting and receiving guided electromagnetic waves without an electrical return path. In one embodiment, for example, the guided wave communication system of the subject disclosure can be configured to induce guided electromagnetic waves that propagate along an outer surface of a coaxial cable. Although the guided electromagnetic waves will cause forward currents on the ground shield, the guided electromagnetic waves do not require return currents to enable the guided electromagnetic waves to propagate along the outer surface of the coaxial cable. The same can be said of other transmission media used by a guided wave communication system for the transmission and reception of guided electromagnetic waves. For example, guided electromagnetic waves induced by the guided wave communication system on an outer surface of a bare wire, or an insulated wire can propagate along the bare wire or the insulated bare wire without an electrical return path.

Consequently, electrical systems that require two or more conductors for carrying forward and reverse currents on separate conductors to enable the propagation of electrical signals injected by a sending device are distinct from guided wave systems that induce guided electromagnetic waves on an interface of a transmission medium without the need of an electrical return path to enable the propagation of the guided electromagnetic waves along the interface of the transmission medium.

It is further noted that guided electromagnetic waves as described in the subject disclosure can have an electromagnetic field structure that lies primarily or substantially outside of a transmission medium so as to be bound to or guided by the transmission medium and so as to propagate non-trivial distances on or along an outer surface of the transmission medium. In other embodiments, guided electromagnetic waves can have an electromagnetic field structure that lies primarily or substantially inside a transmission medium so as to be bound to or guided by the transmission medium and so as to propagate non-trivial distances within the transmission medium. In other embodiments, guided electromagnetic waves can have an electromagnetic field structure that lies partially inside and partially outside a transmission medium so as to be bound to or guided by the transmission medium and so as to propagate non-trivial distances along the transmission medium. The desired electronic field structure in an embodiment may vary based upon a variety of factors, including the desired transmission distance, the characteristics of the transmission medium itself, and environmental conditions/characteristics outside of the transmission medium (e.g., presence of rain, fog, atmospheric conditions, etc.).

Various embodiments described herein relate to coupling devices, that can be referred to as "waveguide coupling devices", "waveguide couplers" or more simply as "couplers", "coupling devices" or "launchers" for launching and/or extracting guided electromagnetic waves to and from a transmission medium at millimeter-wave frequencies (e.g., 30 to 300 GHz), wherein the wavelength can be small compared to one or more dimensions of the coupling device and/or the transmission medium such as the circumference of a wire or other cross sectional dimension, or lower microwave frequencies such as 300 MHz to 30 GHz. Transmissions can be generated to propagate as waves guided by a coupling device, such as: a strip, arc or other length of dielectric material; a horn, monopole, rod, slot or other antenna; an array of antennas; a magnetic resonant cavity, or other resonant coupler; a coil, a strip line, a waveguide or other coupling device. In operation, the coupling device receives an electromagnetic wave from a transmitter or transmission medium. The electromagnetic field structure of the electromagnetic wave can be carried inside the coupling device, outside the coupling device or some combination thereof. When the coupling device is in close proximity to a transmission medium, at least a portion of an electromagnetic wave couples to or is bound to the transmission medium, and continues to propagate as guided electromagnetic waves. In a reciprocal fashion, a coupling device can extract guided waves from a transmission medium and transfer these electromagnetic waves to a receiver.

According to an example embodiment, a surface wave is a type of guided wave that is guided by a surface of a transmission medium, such as an exterior or outer surface of the wire, or another surface of the wire that is adjacent to or exposed to another type of medium having different properties (e.g., dielectric properties). Indeed, in an example embodiment, a surface of the wire that guides a surface wave can represent a transitional surface between two different types of media. For example, in the case of a bare or uninsulated wire, the surface of the wire can be the outer or exterior conductive surface of the bare or uninsulated wire that is exposed to air or free space. As another example, in the case of insulated wire, the surface of the wire can be the conductive portion of the wire that meets the insulator portion of the wire, or can otherwise be the insulator surface of the wire that is exposed to air or free space, or can otherwise be any material region between the insulator surface of the wire and the conductive portion of the wire that meets the insulator portion of the wire, depending upon the relative differences in the properties (e.g., dielectric properties) of the insulator, air, and/or the conductor and further dependent on the frequency and propagation mode or modes of the guided wave.

According to an example embodiment, the term "about" a wire or other transmission medium used in conjunction with a guided wave can include fundamental guided wave propagation modes such as a guided waves having a circular or substantially circular field distribution, a symmetrical electromagnetic field distribution (e.g., electric field, magnetic field, electromagnetic field, etc.) or other fundamental mode pattern at least partially around a wire or other transmission medium. In addition, when a guided wave propagates "about" a wire or other transmission medium, it can do so according to a guided wave propagation mode that includes not only the fundamental wave propagation modes (e.g., zero order modes), but additionally or alternatively non-fundamental wave propagation modes such as higher-order guided wave modes (e.g., 1st order modes, 2nd order modes, etc.), asymmetrical modes and/or other guided (e.g., surface) waves that have non-circular field distributions around a wire or other transmission medium. As used herein, the term "guided wave mode" refers to a guided wave propagation mode of a transmission medium, coupling device or other system component of a guided wave communication system.

For example, such non-circular field distributions can be unilateral or multi-lateral with one or more axial lobes characterized by relatively higher field strength and/or one or more nulls or null regions characterized by relatively low-field strength, zero-field strength or substantially zero-field strength. Further, the field distribution can otherwise vary as a function of azimuthal orientation around the wire such that one or more angular regions around the wire have an electric or magnetic field strength (or combination thereof) that is higher than one or more other angular regions of azimuthal orientation, according to an example embodiment. It will be appreciated that the relative orientations or positions of the guided wave higher order modes or asymmetrical modes can vary as the guided wave travels along the wire.

As used herein, the term "millimeter-wave" can refer to electromagnetic waves/signals that fall within the "millimeter-wave frequency band" of 30 GHz to 300 GHz. The term "microwave" can refer to electromagnetic waves/signals that fall within a "microwave frequency band" of 300 MHz to 300 GHz. The term "radio frequency" or "RF" can refer to electromagnetic waves/signals that fall within the "radio frequency band" of 10 kHz to 1 THz. It is appreciated that wireless signals, electrical signals, and guided electromagnetic waves as described in the subject disclosure can be configured to operate at any desirable frequency range, such as, for example, at frequencies within, above or below millimeter-wave and/or microwave frequency bands. In particular, when a coupling device or transmission medium includes a conductive element, the frequency of the guided electromagnetic waves that are carried by the coupling device and/or propagate along the transmission medium can be below the mean collision frequency of the electrons in the conductive element. Further, the frequency of the guided electromagnetic waves that are carried by the coupling device and/or propagate along the transmission medium can be a non-optical frequency, e.g., a radio frequency below the range of optical frequencies that begins at 1 THz.

As used herein, the term "antenna" can refer to a device that is part of a transmitting or receiving system to transmit/radiate or receive wireless signals.

In accordance with one or more embodiments, a method can include receiving, by each of a plurality of launchers, one of a plurality of communication signals, each of the plurality of communication signals including different data, and launching, by each of the plurality of launchers, one of a plurality of electromagnetic waves, each electromagnetic wave of the plurality of electromagnetic waves guided by one of a plurality of twin-lead transmission lines formed between different ones of a plurality of power lines and a common cable, and each electromagnetic wave of the plurality of electromagnetic waves including a different one of the plurality of communication signals.

In accordance with one or more embodiments, a method can include receiving, by each of a plurality of receivers, one of a plurality of electromagnetic waves, each electromagnetic wave of the plurality of electromagnetic waves guided by a different one of a plurality of twin-lead transmission lines, each twin-lead transmission line sharing a wire, and each electromagnetic wave of the plurality of electromagnetic waves including a different one of a plurality of communication signals, and obtaining, by each of the plurality of receivers, one of the plurality of communication signals.

In accordance with one or more embodiments, a device can include a spacer that facilitates separation of a plurality of power lines and a common cable, and a plurality of transmitters coupled to the spacer, each of the plurality of transmitters facilitating transmission of one of a plurality of electromagnetic waves, each electromagnetic wave of the plurality of electromagnetic waves guided by one of a plurality of twin-lead transmission lines formed between different ones of the plurality of power lines and the common cable.

Referring now to FIG. **1**, a block diagram **100** illustrating an example, non-limiting embodiment of a guided wave communications system is shown. In operation, a transmission device **101** receives one or more communication signals **110** from a communication network or other communications device that includes data and generates guided waves **120** to convey the data via the transmission medium **125** to the transmission device **102**. The transmission device **102** receives the guided waves **120** and converts them to communication signals **112** that include the data for transmission to a communications network or other communications device. The guided waves **120** can be modulated to convey data via a modulation technique such as phase shift keying, frequency shift keying, quadrature amplitude modulation, amplitude modulation, multi-carrier modulation such as orthogonal frequency division multiplexing and via multiple access techniques such as frequency division multiplexing, time division multiplexing, code division multiplexing, multiplexing via differing wave propagation modes and via other modulation and access strategies.

The communication network or networks can include a wireless communication network such as a mobile data network, a cellular voice and data network, a wireless local area network (e.g., WiFi or an 802.xx network), a satellite communications network, a personal area network or other wireless network. The communication network or networks can also include a wired communication network such as a telephone network, an Ethernet network, a local area network, a wide area network such as the Internet, a broadband access network, a cable network, a fiber optic network, or other wired network. The communication devices can include a network edge device, bridge device or home gateway, a set-top box, broadband modem, telephone adapter, access point, base station, or other fixed communication device, a mobile communication device such as an automotive gateway or automobile, laptop computer, tablet, smartphone, cellular telephone, or other communication device.

In an example embodiment, the guided wave communication system **100** can operate in a bi-directional fashion where transmission device **102** receives one or more communication signals **112** from a communication network or device that includes other data and generates guided waves **122** to convey the other data via the transmission medium **125** to the transmission device **101**. In this mode of operation, the transmission device **101** receives the guided waves **122** and converts them to communication signals **110** that include the other data for transmission to a communications network or device. The guided waves **122** can be modulated to convey data via a modulation technique such as phase shift keying, frequency shift keying, quadrature amplitude modulation, amplitude modulation, multi-carrier modulation such as orthogonal frequency division multiplexing and via multiple access techniques such as frequency division multiplexing, time division multiplexing, code division multiplexing, multiplexing via differing wave propagation modes and via other modulation and access strategies.

The transmission medium **125** can include a cable having at least one inner portion surrounded by a dielectric material such as an insulator or other dielectric cover, coating or other dielectric material, the dielectric material having an outer surface and a corresponding circumference. In an example embodiment, the transmission medium **125** operates as a single-wire transmission line to guide the transmission of an electromagnetic wave. When the transmission medium **125** is implemented as a single wire transmission system, it can include a wire. The wire can be insulated or uninsulated, and single-stranded or multi-stranded (e.g., braided). In other embodiments, the transmission medium **125** can contain conductors of other shapes or configurations including wire bundles, cables, rods, rails, pipes. In addition, the transmission medium **125** can include non-conductors such as dielectric pipes, rods, rails, or other dielectric members; combinations of conductors and dielectric materials, conductors without dielectric materials or other guided wave transmission media. It should be noted that the transmission medium **125** can otherwise include any of the transmission media previously discussed.

Further, as previously discussed, the guided waves **120** and **122** can be contrasted with radio transmissions over free space/air or conventional propagation of electrical power or signals through the conductor of a wire via an electrical circuit. In addition to the propagation of guided waves **120** and **122**, the transmission medium **125** may optionally contain one or more wires that propagate electrical power or other communication signals in a conventional manner as a part of one or more electrical circuits.

Referring now to FIG. **2**, a block diagram **200** illustrating an example, non-limiting embodiment of a transmission device is shown. The transmission device **101** or **102** includes a communications interface (I/F) **205**, a transceiver **210** and a coupler **220**.

In an example of operation, the communications interface **205** receives a communication signal **110** or **112** that includes data. In various embodiments, the communications interface **205** can include a wireless interface for receiving a wireless communication signal in accordance with a wireless standard protocol such as LTE or other cellular

voice and data protocol, WiFi or an 802.11 protocol, WIMAX protocol, Ultra Wideband protocol, Bluetooth protocol, Zigbee protocol, a direct broadcast satellite (DBS) or other satellite communication protocol or other wireless protocol. In addition or in the alternative, the communications interface **205** includes a wired interface that operates in accordance with an Ethernet protocol, universal serial bus (USB) protocol, a data over cable service interface specification (DOCSIS) protocol, a digital subscriber line (DSL) protocol, a Firewire (IEEE 1394) protocol, or other wired protocol. In additional to standards-based protocols, the communications interface **205** can operate in conjunction with other wired or wireless protocol. In addition, the communications interface **205** can optionally operate in conjunction with a protocol stack that includes multiple protocol layers including a MAC protocol, transport protocol, application protocol, etc.

In an example of operation, the transceiver **210** generates an electromagnetic wave based on the communication signal **110** or **112** to convey the data. The electromagnetic wave has at least one carrier frequency and at least one corresponding wavelength. The carrier frequency can be within a millimeter-wave frequency band of 30 GHz-300 GHz, such as 60 GHz or a carrier frequency in the range of 30-40 GHz or a lower frequency band of 300 MHz-30 GHz in the microwave frequency range such as 26-30 GHz, 11 GHz, 6 GHz or 3 GHz, but it will be appreciated that other carrier frequencies are possible in other embodiments. In one mode of operation, the transceiver **210** merely upconverts the communications signal or signals **110** or **112** for transmission of the electromagnetic signal in the microwave or millimeter-wave band as a guided electromagnetic wave that is guided by or bound to the transmission medium **125**. In another mode of operation, the communications interface **205** either converts the communication signal **110** or **112** to a baseband or near baseband signal or extracts the data from the communication signal **110** or **112** and the transceiver **210** modulates a high-frequency carrier with the data, the baseband or near baseband signal for transmission. It should be appreciated that the transceiver **210** can modulate the data received via the communication signal **110** or **112** to preserve one or more data communication protocols of the communication signal **110** or **112** either by encapsulation in the payload of a different protocol or by simple frequency shifting. In the alternative, the transceiver **210** can otherwise translate the data received via the communication signal **110** or **112** to a protocol that is different from the data communication protocol or protocols of the communication signal **110** or **112**.

In an example of operation, the coupler **220** couples the electromagnetic wave to the transmission medium **125** as a guided electromagnetic wave to convey the communications signal or signals **110** or **112**. While the prior description has focused on the operation of the transceiver **210** as a transmitter, the transceiver **210** can also operate to receive electromagnetic waves that convey other data from the single wire transmission medium via the coupler **220** and to generate communications signals **110** or **112**, via communications interface **205** that includes the other data. Consider embodiments where an additional guided electromagnetic wave conveys other data that also propagates along the transmission medium **125**. The coupler **220** can also couple this additional electromagnetic wave from the transmission medium **125** to the transceiver **210** for reception.

The transmission device **101** or **102** includes an optional training controller **230**. In an example embodiment, the training controller **230** is implemented by a standalone processor or a processor that is shared with one or more other components of the transmission device **101** or **102**. The training controller **230** selects the carrier frequencies, modulation schemes and/or guided wave modes for the guided electromagnetic waves based on feedback data received by the transceiver **210** from at least one remote transmission device coupled to receive the guided electromagnetic wave.

In an example embodiment, a guided electromagnetic wave transmitted by a remote transmission device **101** or **102** conveys data that also propagates along the transmission medium **125**. The data from the remote transmission device **101** or **102** can be generated to include the feedback data. In operation, the coupler **220** also couples the guided electromagnetic wave from the transmission medium **125** and the transceiver receives the electromagnetic wave and processes the electromagnetic wave to extract the feedback data.

In an example embodiment, the training controller **230** operates based on the feedback data to evaluate a plurality of candidate frequencies, modulation schemes and/or transmission modes to select a carrier frequency, modulation scheme and/or transmission mode to enhance performance, such as throughput, signal strength, reduce propagation loss, etc.

Consider the following example: a transmission device **101** begins operation under control of the training controller **230** by sending a plurality of guided waves as test signals such as pilot waves or other test signals at a corresponding plurality of candidate frequencies and/or candidate modes directed to a remote transmission device **102** coupled to the transmission medium **125**. The guided waves can include, in addition or in the alternative, test data. The test data can indicate the particular candidate frequency and/or guide-wave mode of the signal. In an embodiment, the training controller **230** at the remote transmission device **102** receives the test signals and/or test data from any of the guided waves that were properly received and determines the best candidate frequency and/or guided wave mode, a set of acceptable candidate frequencies and/or guided wave modes, or a rank ordering of candidate frequencies and/or guided wave modes. This selection of candidate frequenc(ies) or/and guided-mode(s) are generated by the training controller **230** based on one or more optimizing criteria such as received signal strength, bit error rate, packet error rate, signal to noise ratio, propagation loss, etc. The training controller **230** generates feedback data that indicates the selection of candidate frequenc(ies) or/and guided wave mode(s) and sends the feedback data to the transceiver **210** for transmission to the transmission device **101**. The transmission device **101** and **102** can then communicate data with one another based on the selection of candidate frequenc(ies) or/and guided wave mode(s).

In other embodiments, the guided electromagnetic waves that contain the test signals and/or test data are reflected back, repeated back or otherwise looped back by the remote transmission device **102** to the transmission device **101** for reception and analysis by the training controller **230** of the transmission device **101** that initiated these waves. For example, the transmission device **101** can send a signal to the remote transmission device **102** to initiate a test mode where a physical reflector is switched on the line, a termination impedance is changed to cause reflections, a loop back mode is switched on to couple electromagnetic waves back to the source transmission device **102**, and/or a repeater mode is enabled to amplify and retransmit the electromagnetic waves back to the source transmission device **102**. The training controller **230** at the source transmission device **102**

receives the test signals and/or test data from any of the guided waves that were properly received and determines selection of candidate frequenc(ies) or/and guided wave mode(s).

While the procedure above has been described in a start-up or initialization mode of operation, each transmission device **101** or **102** can send test signals, evaluate candidate frequencies or guided wave modes via non-test such as normal transmissions or otherwise evaluate candidate frequencies or guided wave modes at other times or continuously as well. In an example embodiment, the communication protocol between the transmission devices **101** and **102** can include an on-request or periodic test mode where either full testing or more limited testing of a subset of candidate frequencies and guided wave modes are tested and evaluated. In other modes of operation, the re-entry into such a test mode can be triggered by a degradation of performance due to a disturbance, weather conditions, etc. In an example embodiment, the receiver bandwidth of the transceiver **210** is either sufficiently wide or swept to receive all candidate frequencies or can be selectively adjusted by the training controller **230** to a training mode where the receiver bandwidth of the transceiver **210** is sufficiently wide or swept to receive all candidate frequencies.

Referring now to FIG. **3**, a graphical diagram **300** illustrating an example, non-limiting embodiment of an electromagnetic field distribution is shown. In this embodiment, a transmission medium **125** in air includes an inner conductor **301** and an insulating jacket **302** of dielectric material, as shown in cross section. The diagram **300** includes different gray-scales that represent differing electromagnetic field strengths generated by the propagation of the guided wave having an asymmetrical and non-fundamental guided wave mode.

In particular, the electromagnetic field distribution corresponds to a modal "sweet spot" that enhances guided electromagnetic wave propagation along an insulated transmission medium and reduces end-to-end transmission loss. In this particular mode, electromagnetic waves are guided by the transmission medium **125** to propagate along an outer surface of the transmission medium—in this case, the outer surface of the insulating jacket **302**. Electromagnetic waves are partially embedded in the insulator and partially radiating on the outer surface of the insulator. In this fashion, electromagnetic waves are "lightly" coupled to the insulator so as to enable electromagnetic wave propagation at long distances with low propagation loss.

As shown, the guided wave has a field structure that lies primarily or substantially outside of the transmission medium **125** that serves to guide the electromagnetic waves. The regions inside the conductor **301** have little or no field. Likewise regions inside the insulating jacket **302** have low field strength. The majority of the electromagnetic field strength is distributed in the lobes **304** at the outer surface of the insulating jacket **302** and in close proximity thereof. The presence of an asymmetric guided wave mode is shown by the high electromagnetic field strengths at the top and bottom of the outer surface of the insulating jacket **302** (in the orientation of the diagram)—as opposed to very small field strengths on the other sides of the insulating jacket **302**.

The example shown corresponds to a 38 GHz electromagnetic wave guided by a wire with a diameter of 1.1 cm and a dielectric insulation of thickness of 0.36 cm. Because the electromagnetic wave is guided by the transmission medium **125** and the majority of the field strength is concentrated in the air outside of the insulating jacket **302** within a limited distance of the outer surface, the guided wave can propagate longitudinally down the transmission medium **125** with very low loss. In the example shown, this "limited distance" corresponds to a distance from the outer surface that is less than half the largest cross sectional dimension of the transmission medium **125**. In this case, the largest cross sectional dimension of the wire corresponds to the overall diameter of 1.82 cm, however, this value can vary with the size and shape of the transmission medium **125**. For example, should the transmission medium **125** be of a rectangular shape with a height of 0.3 cm and a width of 0.4 cm, the largest cross sectional dimension would be the diagonal of 0.5 cm and the corresponding limited distance would be 0.25 cm. The dimensions of the area containing the majority of the field strength also vary with the frequency, and in general, increase as carrier frequencies decrease.

It should also be noted that the components of a guided wave communication system, such as couplers and transmission media can have their own cut-off frequencies for each guided wave mode. The cut-off frequency generally sets forth the lowest frequency that a particular guided wave mode is designed to be supported by that particular component. In an example embodiment, the particular asymmetric mode of propagation shown is induced on the transmission medium **125** by an electromagnetic wave having a frequency that falls within a limited range (such as Fc to 2Fc) of the lower cut-off frequency Fc for this particular asymmetric mode. The lower cut-off frequency Fc is particular to the characteristics of transmission medium **125**. For embodiments as shown that include an inner conductor **301** surrounded by an insulating jacket **302**, this cutoff frequency can vary based on the dimensions and properties of the insulating jacket **302** and potentially the dimensions and properties of the inner conductor **301** and can be determined experimentally to have a desired mode pattern. It should be noted however, that similar effects can be found for a hollow dielectric or insulator without an inner conductor. In this case, the cutoff frequency can vary based on the dimensions and properties of the hollow dielectric or insulator.

At frequencies lower than the lower cut-off frequency, the asymmetric mode is difficult to induce in the transmission medium **125** and fails to propagate for all but trivial distances. As the frequency increases above the limited range of frequencies about the cut-off frequency, the asymmetric mode shifts more and more inward of the insulating jacket **302**. At frequencies much larger than the cut-off frequency, the field strength is no longer concentrated outside of the insulating jacket, but primarily inside of the insulating jacket **302**. While the transmission medium **125** provides strong guidance to the electromagnetic wave and propagation is still possible, ranges are more limited by increased losses due to propagation within the insulating jacket **302**—as opposed to the surrounding air.

Referring now to FIG. **4**, a graphical diagram **400** illustrating an example, non-limiting embodiment of an electromagnetic field distribution is shown. In particular, a cross section diagram **400**, similar to FIG. **3** is shown with common reference numerals used to refer to similar elements. The example shown corresponds to a 60 GHz wave guided by a wire with a diameter of 1.1 cm and a dielectric insulation of thickness of 0.36 cm. Because the frequency of the guided wave is above the limited range of the cut-off frequency of this particular asymmetric mode, much of the field strength has shifted inward of the insulating jacket **302**. In particular, the field strength is concentrated primarily inside of the insulating jacket **302**. While the transmission medium **125** provides strong guidance to the electromag-

netic wave and propagation is still possible, ranges are more limited when compared with the embodiment of FIG. **3**, by increased losses due to propagation within the insulating jacket **302**.

Referring now to FIG. **5**A, a graphical diagram illustrating an example, non-limiting embodiment of a frequency response is shown. In particular, diagram **500** presents a graph of end-to-end loss (in dB) as a function of frequency, overlaid with electromagnetic field distributions **510**, **520** and **530** at three points for a 200 cm insulated medium voltage wire. The boundary between the insulator and the surrounding air is represented by reference numeral **525** in each electromagnetic field distribution.

As discussed in conjunction with FIG. **3**, an example of a desired asymmetric mode of propagation shown is induced on the transmission medium **125** by an electromagnetic wave having a frequency that falls within a limited range (such as Fc to 2Fc) of the lower cut-off frequency Fc of the transmission medium for this particular asymmetric mode. In particular, the electromagnetic field distribution **520** at 6 GHz falls within this modal "sweet spot" that enhances electromagnetic wave propagation along an insulated transmission medium and reduces end-to-end transmission loss. In this particular mode, guided waves are partially embedded in the insulator and partially radiating on the outer surface of the insulator. In this fashion, the electromagnetic waves are "lightly" coupled to the insulator so as to enable guided electromagnetic wave propagation at long distances with low propagation loss.

At lower frequencies represented by the electromagnetic field distribution **510** at 3 GHz, the asymmetric mode radiates more heavily generating higher propagation losses. At higher frequencies represented by the electromagnetic field distribution **530** at 9 GHz, the asymmetric mode shifts more and more inward of the insulating jacket providing too much absorption, again generating higher propagation losses.

Referring now to FIG. **5**B, a graphical diagram **550** illustrating example, non-limiting embodiments of a longitudinal cross-section of a transmission medium **125**, such as an insulated wire, depicting fields of guided electromagnetic waves at various operating frequencies is shown. As shown in diagram **556**, when the guided electromagnetic waves are at approximately the cutoff frequency (f_c) corresponding to the modal "sweet spot", the guided electromagnetic waves are loosely coupled to the insulated wire so that absorption is reduced, and the fields of the guided electromagnetic waves are bound sufficiently to reduce the amount radiated into the environment (e.g., air). Because absorption and radiation of the fields of the guided electromagnetic waves is low, propagation losses are consequently low, enabling the guided electromagnetic waves to propagate for longer distances.

As shown in diagram **554**, propagation losses increase when an operating frequency of the guide electromagnetic waves increases above about two-times the cutoff frequency (f_c)—or as referred to, above the range of the "sweet spot". More of the field strength of the electromagnetic wave is driven inside the insulating layer, increasing propagation losses. At frequencies much higher than the cutoff frequency (f_c) the guided electromagnetic waves are strongly bound to the insulated wire as a result of the fields emitted by the guided electromagnetic waves being concentrated in the insulation layer of the wire, as shown in diagram **552**. This in turn raises propagation losses further due to absorption of the guided electromagnetic waves by the insulation layer. Similarly, propagation losses increase when the operating frequency of the guided electromagnetic waves is substantially below the cutoff frequency (f_c), as shown in diagram **558**. At frequencies much lower than the cutoff frequency (f_c) the guided electromagnetic waves are weakly (or nominally) bound to the insulated wire and thereby tend to radiate into the environment (e.g., air), which in turn, raises propagation losses due to radiation of the guided electromagnetic waves.

Referring now to FIG. **6**, a graphical diagram **600** illustrating an example, non-limiting embodiment of an electromagnetic field distribution is shown. In this embodiment, a transmission medium **602** is a bare wire, as shown in cross section. The diagram **300** includes different gray-scales that represent differing electromagnetic field strengths generated by the propagation of a guided wave having a symmetrical and fundamental guided wave mode at a single carrier frequency.

In this particular mode, electromagnetic waves are guided by the transmission medium **602** to propagate along an outer surface of the transmission medium—in this case, the outer surface of the bare wire. Electromagnetic waves are "lightly" coupled to the wire so as to enable electromagnetic wave propagation at long distances with low propagation loss. As shown, the guided wave has a field structure that lies substantially outside of the transmission medium **602** that serves to guide the electromagnetic waves. The regions inside the conductor **602** have little or no field.

Referring now to FIG. **7**, a block diagram **700** illustrating an example, non-limiting embodiment of an arc coupler is shown. In particular a coupling device is presented for use in a transmission device, such as transmission device **101** or **102** presented in conjunction with FIG. **1**. The coupling device includes an arc coupler **704** coupled to a transmitter circuit **712** and termination or damper **714**. The arc coupler **704** can be made of a dielectric material, or other low-loss insulator (e.g., Teflon, polyethylene, etc.), or made of a conducting (e.g., metallic, non-metallic, etc.) material, or any combination of the foregoing materials. As shown, the arc coupler **704** operates as a waveguide and has a wave **706** propagating as a guided wave about a waveguide surface of the arc coupler **704**. In the embodiment shown, at least a portion of the arc coupler **704** can be placed near a wire **702** or other transmission medium, (such as transmission medium **125**), in order to facilitate coupling between the arc coupler **704** and the wire **702** or other transmission medium, as described herein to launch the guided wave **708** on the wire. The arc coupler **704** can be placed such that a portion of the curved arc coupler **704** is tangential to, and parallel or substantially parallel to the wire **702**. The portion of the arc coupler **704** that is parallel to the wire can be an apex of the curve, or any point where a tangent of the curve is parallel to the wire **702**. When the arc coupler **704** is positioned or placed thusly, the wave **706** travelling along the arc coupler **704** couples, at least in part, to the wire **702**, and propagates as guided wave **708** around or about the wire surface of the wire **702** and longitudinally along the wire **702**. The guided wave **708** can be characterized as a surface wave or other electromagnetic wave that is guided by or bound to the wire **702** or other transmission medium.

A portion of the wave **706** that does not couple to the wire **702** propagates as a wave **710** along the arc coupler **704**. It will be appreciated that the arc coupler **704** can be configured and arranged in a variety of positions in relation to the wire **702** to achieve a desired level of coupling or non-coupling of the wave **706** to the wire **702**. For example, the curvature and/or length of the arc coupler **704** that is parallel or substantially parallel, as well as its separation distance

(which can include zero separation distance in an embodiment), to the wire **702** can be varied without departing from example embodiments. Likewise, the arrangement of arc coupler **704** in relation to the wire **702** may be varied based upon considerations of the respective intrinsic characteristics (e.g., thickness, composition, electromagnetic properties, etc.) of the wire **702** and the arc coupler **704**, as well as the characteristics (e.g., frequency, energy level, etc.) of the waves **706** and **708**.

The guided wave **708** stays parallel or substantially parallel to the wire **702**, even as the wire **702** bends and flexes. Bends in the wire **702** can increase transmission losses, which are also dependent on wire diameters, frequency, and materials. If the dimensions of the arc coupler **704** are chosen for efficient power transfer, most of the power in the wave **706** is transferred to the wire **702**, with little power remaining in wave **710**. It will be appreciated that the guided wave **708** can still be multi-modal in nature (discussed herein), including having modes that are non-fundamental or asymmetric, while traveling along a path that is parallel or substantially parallel to the wire **702**, with or without a fundamental transmission mode. In an embodiment, non-fundamental or asymmetric modes can be utilized to minimize transmission losses and/or obtain increased propagation distances.

It is noted that the term parallel is generally a geometric construct which often is not exactly achievable in real systems. Accordingly, the term parallel as utilized in the subject disclosure represents an approximation rather than an exact configuration when used to describe embodiments disclosed in the subject disclosure. In an embodiment, substantially parallel can include approximations that are within 30 degrees of true parallel in all dimensions.

In an embodiment, the wave **706** can exhibit one or more wave propagation modes. The arc coupler modes can be dependent on the shape and/or design of the coupler **704**. The one or more arc coupler modes of wave **706** can generate, influence, or impact one or more wave propagation modes of the guided wave **708** propagating along wire **702**. It should be particularly noted however that the guided wave modes present in the guided wave **706** may be the same or different from the guided wave modes of the guided wave **708**. In this fashion, one or more guided wave modes of the guided wave **706** may not be transferred to the guided wave **708**, and further one or more guided wave modes of guided wave **708** may not have been present in guided wave **706**. It should also be noted that the cut-off frequency of the arc coupler **704** for a particular guided wave mode may be different than the cutoff frequency of the wire **702** or other transmission medium for that same mode. For example, while the wire **702** or other transmission medium may be operated slightly above its cutoff frequency for a particular guided wave mode, the arc coupler **704** may be operated well above its cut-off frequency for that same mode for low loss, slightly below its cut-off frequency for that same mode to, for example, induce greater coupling and power transfer, or some other point in relation to the arc coupler's cutoff frequency for that mode.

In an embodiment, the wave propagation modes on the wire **702** can be similar to the arc coupler modes since both waves **706** and **708** propagate about the outside of the arc coupler **704** and wire **702** respectively. In some embodiments, as the wave **706** couples to the wire **702**, the modes can change form, or new modes can be created or generated, due to the coupling between the arc coupler **704** and the wire **702**. For example, differences in size, material, and/or impedances of the arc coupler **704** and wire **702** may create additional modes not present in the arc coupler modes and/or suppress some of the arc coupler modes. The wave propagation modes can comprise the fundamental transverse electromagnetic mode (Quasi-TEM_{00}), where only small electric and/or magnetic fields extend in the direction of propagation, and the electric and magnetic fields extend radially outwards while the guided wave propagates along the wire. This guided wave mode can be donut shaped, where few of the electromagnetic fields exist within the arc coupler **704** or wire **702**.

Waves **706** and **708** can comprise a fundamental TEM mode where the fields extend radially outwards, and also comprise other, non-fundamental (e.g., asymmetric, higher-level, etc.) modes. While particular wave propagation modes are discussed above, other wave propagation modes are likewise possible such as transverse electric (TE) and transverse magnetic (TM) modes, based on the frequencies employed, the design of the arc coupler **704**, the dimensions and composition of the wire **702**, as well as its surface characteristics, its insulation if present, the electromagnetic properties of the surrounding environment, etc. It should be noted that, depending on the frequency, the electrical and physical characteristics of the wire **702** and the particular wave propagation modes that are generated, guided wave **708** can travel along the conductive surface of an oxidized uninsulated wire, an unoxidized uninsulated wire, an insulated wire and/or along the insulating surface of an insulated wire.

In an embodiment, a diameter of the arc coupler **704** is smaller than the diameter of the wire **702**. For the millimeter-band wavelength being used, the arc coupler **704** supports a single waveguide mode that makes up wave **706**. This single waveguide mode can change as it couples to the wire **702** as guided wave **708**. If the arc coupler **704** were larger, more than one waveguide mode can be supported, but these additional waveguide modes may not couple to the wire **702** as efficiently, and higher coupling losses can result. However, in some alternative embodiments, the diameter of the arc coupler **704** can be equal to or larger than the diameter of the wire **702**, for example, where higher coupling losses are desirable or when used in conjunction with other techniques to otherwise reduce coupling losses (e.g., impedance matching with tapering, etc.).

In an embodiment, the wavelength of the waves **706** and **708** are comparable in size, or smaller than a circumference of the arc coupler **704** and the wire **702**. In an example, if the wire **702** has a diameter of 0.5 cm, and a corresponding circumference of around 1.5 cm, the wavelength of the transmission is around 1.5 cm or less, corresponding to a frequency of 70 GHz or greater. In another embodiment, a suitable frequency of the transmission and the carrier-wave signal is in the range of 30-100 GHz, perhaps around 30-60 GHz, and around 38 GHz in one example. In an embodiment, when the circumference of the arc coupler **704** and wire **702** is comparable in size to, or greater, than a wavelength of the transmission, the waves **706** and **708** can exhibit multiple wave propagation modes including fundamental and/or non-fundamental (symmetric and/or asymmetric) modes that propagate over sufficient distances to support various communication systems described herein. The waves **706** and **708** can therefore comprise more than one type of electric and magnetic field configuration. In an embodiment, as the guided wave **708** propagates down the wire **702**, the electrical and magnetic field configurations will remain the same from end to end of the wire **702**. In other embodiments, as the guided wave **708** encounters interference (distortion or obstructions) or loses energy due

to transmission losses or scattering, the electric and magnetic field configurations can change as the guided wave **708** propagates down wire **702**.

In an embodiment, the arc coupler **704** can be composed of nylon, Teflon, polyethylene, a polyamide, or other plastics. In other embodiments, other dielectric materials are possible. The wire surface of wire **702** can be metallic with either a bare metallic surface, or can be insulated using plastic, dielectric, insulator or other coating, jacket or sheathing. In an embodiment, a dielectric or otherwise non-conducting/insulated waveguide can be paired with either a bare/metallic wire or insulated wire. In other embodiments, a metallic and/or conductive waveguide can be paired with a bare/metallic wire or insulated wire. In an embodiment, an oxidation layer on the bare metallic surface of the wire **702** (e.g., resulting from exposure of the bare metallic surface to oxygen/air) can also provide insulating or dielectric properties similar to those provided by some insulators or sheathings.

It is noted that the graphical representations of waves **706**, **708** and **710** are presented merely to illustrate the principles that wave **706** induces or otherwise launches a guided wave **708** on a wire **702** that operates, for example, as a single wire transmission line. Wave **710** represents the portion of wave **706** that remains on the arc coupler **704** after the generation of guided wave **708**. The actual electric and magnetic fields generated as a result of such wave propagation may vary depending on the frequencies employed, the particular wave propagation mode or modes, the design of the arc coupler **704**, the dimensions and composition of the wire **702**, as well as its surface characteristics, its optional insulation, the electromagnetic properties of the surrounding environment, etc.

It is noted that arc coupler **704** can include a termination circuit or damper **714** at the end of the arc coupler **704** that can absorb leftover radiation or energy from wave **710**. The termination circuit or damper **714** can prevent and/or minimize the leftover radiation or energy from wave **710** reflecting back toward transmitter circuit **712**. In an embodiment, the termination circuit or damper **714** can include termination resistors, and/or other components that perform impedance matching to attenuate reflection. In some embodiments, if the coupling efficiencies are high enough, and/or wave **710** is sufficiently small, it may not be necessary to use a termination circuit or damper **714**. For the sake of simplicity, these transmitter **712** and termination circuits or dampers **714** may not be depicted in the other figures, but in those embodiments, transmitter and termination circuits or dampers may possibly be used.

Further, while a single arc coupler **704** is presented that generates a single guided wave **708**, multiple arc couplers **704** placed at different points along the wire **702** and/or at different azimuthal orientations about the wire can be employed to generate and receive multiple guided waves **708** at the same or different frequencies, at the same or different phases, at the same or different wave propagation modes.

FIG. **8**, a block diagram **800** illustrating an example, non-limiting embodiment of an arc coupler is shown. In the embodiment shown, at least a portion of the coupler **704** can be placed near a wire **702** or other transmission medium, (such as transmission medium **125**), in order to facilitate coupling between the arc coupler **704** and the wire **702** or other transmission medium, to extract a portion of the guided wave **806** as a guided wave **808** as described herein. The arc coupler **704** can be placed such that a portion of the curved arc coupler **704** is tangential to, and parallel or substantially parallel to the wire **702**. The portion of the arc coupler **704** that is parallel to the wire can be an apex of the curve, or any point where a tangent of the curve is parallel to the wire **702**. When the arc coupler **704** is positioned or placed thusly, the wave **806** travelling along the wire **702** couples, at least in part, to the arc coupler **704**, and propagates as guided wave **808** along the arc coupler **704** to a receiving device (not expressly shown). A portion of the wave **806** that does not couple to the arc coupler propagates as wave **810** along the wire **702** or other transmission medium.

In an embodiment, the wave **806** can exhibit one or more wave propagation modes. The arc coupler modes can be dependent on the shape and/or design of the coupler **704**. The one or more modes of guided wave **806** can generate, influence, or impact one or more guide-wave modes of the guided wave **808** propagating along the arc coupler **704**. It should be particularly noted however that the guided wave modes present in the guided wave **806** may be the same or different from the guided wave modes of the guided wave **808**. In this fashion, one or more guided wave modes of the guided wave **806** may not be transferred to the guided wave **808**, and further one or more guided wave modes of guided wave **808** may not have been present in guided wave **806**.

Referring now to FIG. **9**A, a block diagram **900** illustrating an example, non-limiting embodiment of a stub coupler is shown. In particular a coupling device that includes stub coupler **904** is presented for use in a transmission device, such as transmission device **101** or **102** presented in conjunction with FIG. **1**. The stub coupler **904** can be made of a dielectric material, or other low-loss insulator (e.g., Teflon, polyethylene and etc.), or made of a conducting (e.g., metallic, non-metallic, etc.) material, or any combination of the foregoing materials. As shown, the stub coupler **904** operates as a waveguide and has a wave **906** propagating as a guided wave about a waveguide surface of the stub coupler **904**. In the embodiment shown, at least a portion of the stub coupler **904** can be placed near a wire **702** or other transmission medium, (such as transmission medium **125**), in order to facilitate coupling between the stub coupler **904** and the wire **702** or other transmission medium, as described herein to launch the guided wave **908** on the wire.

In an embodiment, the stub coupler **904** is curved, and an end of the stub coupler **904** can be tied, fastened, or otherwise mechanically coupled to a wire **702**. When the end of the stub coupler **904** is fastened to the wire **702**, the end of the stub coupler **904** is parallel or substantially parallel to the wire **702**. Alternatively, another portion of the dielectric waveguide beyond an end can be fastened or coupled to wire **702** such that the fastened or coupled portion is parallel or substantially parallel to the wire **702**. The fastener **910** can be a nylon cable tie or other type of non-conducting/dielectric material that is either separate from the stub coupler **904** or constructed as an integrated component of the stub coupler **904**. The stub coupler **904** can be adjacent to the wire **702** without surrounding the wire **702**.

Like the arc coupler **704** described in conjunction with FIG. **7**, when the stub coupler **904** is placed with the end parallel to the wire **702**, the guided wave **906** travelling along the stub coupler **904** couples to the wire **702**, and propagates as guided wave **908** about the wire surface of the wire **702**. In an example embodiment, the guided wave **908** can be characterized as a surface wave or other electromagnetic wave.

It is noted that the graphical representations of waves **906** and **908** are presented merely to illustrate the principles that wave **906** induces or otherwise launches a guided wave **908**

on a wire **702** that operates, for example, as a single wire transmission line. The actual electric and magnetic fields generated as a result of such wave propagation may vary depending on one or more of the shape and/or design of the coupler, the relative position of the dielectric waveguide to the wire, the frequencies employed, the design of the stub coupler **904**, the dimensions and composition of the wire **702**, as well as its surface characteristics, its optional insulation, the electromagnetic properties of the surrounding environment, etc.

In an embodiment, an end of stub coupler **904** can taper towards the wire **702** in order to increase coupling efficiencies. Indeed, the tapering of the end of the stub coupler **904** can provide impedance matching to the wire **702** and reduce reflections, according to an example embodiment of the subject disclosure. For example, an end of the stub coupler **904** can be gradually tapered in order to obtain a desired level of coupling between waves **906** and **908** as illustrated in FIG. **9**A.

In an embodiment, the fastener **910** can be placed such that there is a short length of the stub coupler **904** between the fastener **910** and an end of the stub coupler **904**. Maximum coupling efficiencies are realized in this embodiment when the length of the end of the stub coupler **904** that is beyond the fastener **910** is at least several wavelengths long for whatever frequency is being transmitted.

Turning now to FIG. **9**B, a diagram **950** illustrating an example, non-limiting embodiment of an electromagnetic distribution in accordance with various aspects described herein is shown. In particular, an electromagnetic distribution is presented in two dimensions for a transmission device that includes coupler **952**, shown in an example stub coupler constructed of a dielectric material. The coupler **952** couples an electromagnetic wave for propagation as a guided wave along an outer surface of a wire **702** or other transmission medium.

The coupler **952** guides the electromagnetic wave to a junction at x_0 via a symmetrical guided wave mode. While some of the energy of the electromagnetic wave that propagates along the coupler **952** is outside of the coupler **952**, the majority of the energy of this electromagnetic wave is contained within the coupler **952**. The junction at x_0 couples the electromagnetic wave to the wire **702** or other transmission medium at an azimuthal angle corresponding to the bottom of the transmission medium. This coupling induces an electromagnetic wave that is guided to propagate along the outer surface of the wire **702** or other transmission medium via at least one guided wave mode in direction **956**. The majority of the energy of the guided electromagnetic wave is outside or, but in close proximity to the outer surface of the wire **702** or other transmission medium. In the example shown, the junction at x_0 forms an electromagnetic wave that propagates via both a symmetrical mode and at least one asymmetrical surface mode, such as the first order mode presented in conjunction with FIG. **3**, that skims the surface of the wire **702** or other transmission medium.

It is noted that the graphical representations of guided waves are presented merely to illustrate an example of guided wave coupling and propagation. The actual electric and magnetic fields generated as a result of such wave propagation may vary depending on the frequencies employed, the design and/or configuration of the coupler **952**, the dimensions and composition of the wire **702** or other transmission medium, as well as its surface characteristics, its insulation if present, the electromagnetic properties of the surrounding environment, etc.

Turning now to FIG. **10**A, illustrated is a block diagram **1000** of an example, non-limiting embodiment of a coupler and transceiver system in accordance with various aspects described herein. The system is an example of transmission device **101** or **102**. In particular, the communication interface **1008** is an example of communications interface **205**, the stub coupler **1002** is an example of coupler **220**, and the transmitter/receiver device **1006**, diplexer **1016**, power amplifier **1014**, low noise amplifier **1018**, frequency mixers **1010** and **1020** and local oscillator **1012** collectively form an example of transceiver **210**.

In operation, the transmitter/receiver device **1006** launches and receives waves (e.g., guided wave **1004** onto stub coupler **1002**). The guided waves **1004** can be used to transport signals received from and sent to a host device, base station, mobile devices, a building or other device by way of a communications interface **1008**. The communications interface **1008** can be an integral part of system **1000**. Alternatively, the communications interface **1008** can be tethered to system **1000**. The communications interface **1008** can comprise a wireless interface for interfacing to the host device, base station, mobile devices, a building or other device utilizing any of various wireless signaling protocols (e.g., LTE, WiFi, WiMAX, IEEE 802.xx, etc.) including an infrared protocol such as an infrared data association (IrDA) protocol or other line of sight optical protocol. The communications interface **1008** can also comprise a wired interface such as a fiber optic line, coaxial cable, twisted pair, category 5 (CAT-5) cable or other suitable wired or optical mediums for communicating with the host device, base station, mobile devices, a building or other device via a protocol such as an Ethernet protocol, universal serial bus (USB) protocol, a data over cable service interface specification (DOCSIS) protocol, a digital subscriber line (DSL) protocol, a Firewire (IEEE 1394) protocol, or other wired or optical protocol. For embodiments where system **1000** functions as a repeater, the communications interface **1008** may not be necessary.

The output signals (e.g., Tx) of the communications interface **1008** can be combined with a carrier wave (e.g., millimeter-wave carrier wave) generated by a local oscillator **1012** at frequency mixer **1010**. Frequency mixer **1010** can use heterodyning techniques or other frequency shifting techniques to frequency shift the output signals from communications interface **1008**. For example, signals sent to and from the communications interface **1008** can be modulated signals such as orthogonal frequency division multiplexed (OFDM) signals formatted in accordance with a Long-Term Evolution (LTE) wireless protocol or other wireless 3G, 4G, 5G or higher voice and data protocol, a Zigbee, WIMAX, UltraWideband or IEEE 802.11 wireless protocol; a wired protocol such as an Ethernet protocol, universal serial bus (USB) protocol, a data over cable service interface specification (DOCSIS) protocol, a digital subscriber line (DSL) protocol, a Firewire (IEEE 1394) protocol or other wired or wireless protocol. In an example embodiment, this frequency conversion can be done in the analog domain, and as a result, the frequency shifting can be done without regard to the type of communications protocol used by a base station, mobile devices, or in-building devices. As new communications technologies are developed, the communications interface **1008** can be upgraded (e.g., updated with software, firmware, and/or hardware) or replaced and the frequency shifting and transmission apparatus can remain, simplifying upgrades. The carrier wave can then be sent to a power amplifier ("PA") **1014** and can be transmitted via the transmitter receiver device **1006** via the diplexer **1016**.

Signals received from the transmitter/receiver device **1006** that are directed towards the communications interface **1008** can be separated from other signals via diplexer **1016**. The received signal can then be sent to low noise amplifier ("LNA") **1018** for amplification. A frequency mixer **1020**, with help from local oscillator **1012** can downshift the received signal (which is in the millimeter-wave band or around 38 GHz in some embodiments) to the native frequency. The communications interface **1008** can then receive the transmission at an input port (Rx).

In an embodiment, transmitter/receiver device **1006** can include a cylindrical or non-cylindrical metal (which, for example, can be hollow in an embodiment, but not necessarily drawn to scale) or other conducting or non-conducting waveguide and an end of the stub coupler **1002** can be placed in or in proximity to the waveguide or the transmitter/receiver device **1006** such that when the transmitter/receiver device **1006** generates a transmission, the guided wave couples to stub coupler **1002** and propagates as a guided wave **1004** about the waveguide surface of the stub coupler **1002**. In some embodiments, the guided wave **1004** can propagate in part on the outer surface of the stub coupler **1002** and in part inside the stub coupler **1002**. In other embodiments, the guided wave **1004** can propagate substantially or completely on the outer surface of the stub coupler **1002**. In yet other embodiments, the guided wave **1004** can propagate substantially or completely inside the stub coupler **1002**. In this latter embodiment, the guided wave **1004** can radiate at an end of the stub coupler **1002** (such as the tapered end shown in FIG. **4**) for coupling to a transmission medium such as a wire **702** of FIG. **7**. Similarly, if guided wave **1004** is incoming (coupled to the stub coupler **1002** from a wire **702**), guided wave **1004** then enters the transmitter/receiver device **1006** and couples to the cylindrical waveguide or conducting waveguide. While transmitter/receiver device **1006** is shown to include a separate waveguide—an antenna, cavity resonator, klystron, magnetron, travelling wave tube, or other radiating element can be employed to induce a guided wave on the coupler **1002**, with or without the separate waveguide.

In an embodiment, stub coupler **1002** can be wholly constructed of a dielectric material (or another suitable insulating material), without any metallic or otherwise conducting materials therein. Stub coupler **1002** can be composed of nylon, Teflon, polyethylene, a polyamide, other plastics, or other materials that are non-conducting and suitable for facilitating transmission of electromagnetic waves at least in part on an outer surface of such materials. In another embodiment, stub coupler **1002** can include a core that is conducting/metallic, and have an exterior dielectric surface. Similarly, a transmission medium that couples to the stub coupler **1002** for propagating electromagnetic waves induced by the stub coupler **1002** or for supplying electromagnetic waves to the stub coupler **1002** can, in addition to being a bare or insulated wire, be wholly constructed of a dielectric material (or another suitable insulating material), without any metallic or otherwise conducting materials therein.

It is noted that although FIG. **10**A shows that the opening of transmitter receiver device **1006** is much wider than the stub coupler **1002**, this is not to scale, and that in other embodiments the width of the stub coupler **1002** is comparable or slightly smaller than the opening of the hollow waveguide. It is also not shown, but in an embodiment, an end of the coupler **1002** that is inserted into the transmitter/receiver device **1006** tapers down in order to reduce reflection and increase coupling efficiencies.

Before coupling to the stub coupler **1002**, the one or more waveguide modes of the guided wave generated by the transmitter/receiver device **1006** can couple to the stub coupler **1002** to induce one or more wave propagation modes of the guided wave **1004**. The wave propagation modes of the guided wave **1004** can be different than the hollow metal waveguide modes due to the different characteristics of the hollow metal waveguide and the dielectric waveguide. For instance, wave propagation modes of the guided wave **1004** can comprise the fundamental transverse electromagnetic mode (Quasi-TEM_{00}), where only small electrical and/or magnetic fields extend in the direction of propagation, and the electric and magnetic fields extend radially outwards from the stub coupler **1002** while the guided waves propagate along the stub coupler **1002**. The fundamental transverse electromagnetic mode wave propagation mode may or may not exist inside a waveguide that is hollow. Therefore, the hollow metal waveguide modes that are used by transmitter/receiver device **1006** are waveguide modes that can couple effectively and efficiently to wave propagation modes of stub coupler **1002**.

It will be appreciated that other constructs or combinations of the transmitter/receiver device **1006** and stub coupler **1002** are possible. For example, a stub coupler **1002'** can be placed tangentially or in parallel (with or without a gap) with respect to an outer surface of the hollow metal waveguide of the transmitter/receiver device **1006'** (corresponding circuitry not shown) as depicted by reference **1000'** of FIG. **10**B. In another embodiment, not shown by reference **1000'**, the stub coupler **1002'** can be placed inside the hollow metal waveguide of the transmitter/receiver device **1006'** without an axis of the stub coupler **1002'** being coaxially aligned with an axis of the hollow metal waveguide of the transmitter/receiver device **1006'**. In either of these embodiments, the guided wave generated by the transmitter/receiver device **1006'** can couple to a surface of the stub coupler **1002'** to induce one or more wave propagation modes of the guided wave **1004'** on the stub coupler **1002'** including a fundamental mode (e.g., a symmetric mode) and/or a non-fundamental mode (e.g., asymmetric mode).

In one embodiment, the guided wave **1004'** can propagate in part on the outer surface of the stub coupler **1002'** and in part inside the stub coupler **1002'**. In another embodiment, the guided wave **1004'** can propagate substantially or completely on the outer surface of the stub coupler **1002'**. In yet other embodiments, the guided wave **1004'** can propagate substantially or completely inside the stub coupler **1002'**. In this latter embodiment, the guided wave **1004'** can radiate at an end of the stub coupler **1002'** (such as the tapered end shown in FIG. **9**) for coupling to a transmission medium such as a wire **702** of FIG. **9**.

It will be further appreciated that other constructs the transmitter/receiver device **1006** are possible. For example, a hollow metal waveguide of a transmitter/receiver device **1006"** (corresponding circuitry not shown), depicted in FIG. **10**B as reference **1000"**, can be placed tangentially or in parallel (with or without a gap) with respect to an outer surface of a transmission medium such as the wire **702** of FIG. **4** without the use of the stub coupler **1002**. In this embodiment, the guided wave generated by the transmitter/receiver device **1006"** can couple to a surface of the wire **702** to induce one or more wave propagation modes of a guided wave **908** on the wire **702** including a fundamental mode (e.g., a symmetric mode) and/or a non-fundamental mode (e.g., asymmetric mode). In another embodiment, the wire **702** can be positioned inside a hollow metal waveguide of a transmitter/receiver device **1006'"** (corresponding circuitry

not shown) so that an axis of the wire **702** is coaxially (or not coaxially) aligned with an axis of the hollow metal waveguide without the use of the stub coupler **1002**—see FIG. **10**B reference **1000'''**. In this embodiment, the guided wave generated by the transmitter/receiver device **1006'''** can couple to a surface of the wire **702** to induce one or more wave propagation modes of a guided wave **908** on the wire including a fundamental mode (e.g., a symmetric mode) and/or a non-fundamental mode (e.g., asymmetric mode).

In the embodiments of **1000''** and **1000'''**, for a wire **702** having an insulated outer surface, the guided wave **908** can propagate in part on the outer surface of the insulator and in part inside the insulator. In embodiments, the guided wave **908** can propagate substantially or completely on the outer surface of the insulator, or substantially or completely inside the insulator. In the embodiments of **1000''** and **1000'''**, for a wire **702** that is a bare conductor, the guided wave **908** can propagate in part on the outer surface of the conductor and in part inside the conductor. In another embodiment, the guided wave **908** can propagate substantially or completely on the outer surface of the conductor.

Referring now to FIG. **11**, a block diagram **1100** illustrating an example, non-limiting embodiment of a dual stub coupler is shown. In particular, a dual coupler design is presented for use in a transmission device, such as transmission device **101** or **102** presented in conjunction with FIG. **1**. In an embodiment, two or more couplers (such as the stub couplers **1104** and **1106**) can be positioned around a wire **1102** in order to receive guided wave **1108**. In an embodiment, one coupler is enough to receive the guided wave **1108**. In that case, guided wave **1108** couples to coupler **1104** and propagates as guided wave **1110**. If the field structure of the guided wave **1108** oscillates or undulates around the wire **1102** due to the particular guided wave mode(s) or various outside factors, then coupler **1106** can be placed such that guided wave **1108** couples to coupler **1106**. In some embodiments, four or more couplers can be placed around a portion of the wire **1102**, e.g., at 90 degrees or another spacing with respect to each other, in order to receive guided waves that may oscillate or rotate around the wire **1102**, that have been induced at different azimuthal orientations or that have non-fundamental or higher order modes that, for example, have lobes and/or nulls or other asymmetries that are orientation dependent. However, it will be appreciated that there may be less than or more than four couplers placed around a portion of the wire **1102** without departing from example embodiments.

It should be noted that while couplers **1106** and **1104** are illustrated as stub couplers, any other of the coupler designs described herein including arc couplers, antenna or horn couplers, magnetic couplers, etc., could likewise be used. It will also be appreciated that while some example embodiments have presented a plurality of couplers around at least a portion of a wire **1102**, this plurality of couplers can also be considered as part of a single coupler system having multiple coupler subcomponents. For example, two or more couplers can be manufactured as single system that can be installed around a wire in a single installation such that the couplers are either pre-positioned or adjustable relative to each other (either manually or automatically with a controllable mechanism such as a motor or other actuator) in accordance with the single system.

Receivers coupled to couplers **1106** and **1104** can use diversity combining to combine signals received from both couplers **1106** and **1104** in order to maximize the signal quality. In other embodiments, if one or the other of the couplers **1104** and **1106** receive a transmission that is above a predetermined threshold, receivers can use selection diversity when deciding which signal to use. Further, while reception by a plurality of couplers **1106** and **1104** is illustrated, transmission by couplers **1106** and **1104** in the same configuration can likewise take place. In particular, a wide range of multi-input multi-output (MIMO) transmission and reception techniques can be employed for transmissions where a transmission device, such as transmission device **101** or **102** presented in conjunction with FIG. **1** includes multiple transceivers and multiple couplers.

It is noted that the graphical representations of waves **1108** and **1110** are presented merely to illustrate the principles that guided wave **1108** induces or otherwise launches a wave **1110** on a coupler **1104**. The actual electric and magnetic fields generated as a result of such wave propagation may vary depending on the frequencies employed, the design of the coupler **1104**, the dimensions and composition of the wire **1102**, as well as its surface characteristics, its insulation if any, the electromagnetic properties of the surrounding environment, etc.

Referring now to FIG. **12**, a block diagram **1200** illustrating an example, non-limiting embodiment of a repeater system is shown. In particular, a repeater device **1210** is presented for use in a transmission device, such as transmission device **101** or **102** presented in conjunction with FIG. **1**. In this system, two couplers **1204** and **1214** can be placed near a wire **1202** or other transmission medium such that guided waves **1205** propagating along the wire **1202** are extracted by coupler **1204** as wave **1206** (e.g. as a guided wave), and then are boosted or repeated by repeater device **1210** and launched as a wave **1216** (e.g. as a guided wave) onto coupler **1214**. The wave **1216** can then be launched on the wire **1202** and continue to propagate along the wire **1202** as a guided wave **1217**. In an embodiment, the repeater device **1210** can receive at least a portion of the power utilized for boosting or repeating through magnetic coupling with the wire **1202**, for example, when the wire **1202** is a power line or otherwise contains a power-carrying conductor. It should be noted that while couplers **1204** and **1214** are illustrated as stub couplers, any other of the coupler designs described herein including arc couplers, antenna or horn couplers, magnetic couplers, or the like, could likewise be used.

In some embodiments, repeater device **1210** can repeat the transmission associated with wave **1206**, and in other embodiments, repeater device **1210** can include a communications interface **205** that extracts data or other signals from the wave **1206** for supplying such data or signals to another network and/or one or more other devices as communication signals **110** or **112** and/or receiving communication signals **110** or **112** from another network and/or one or more other devices and launch guided wave **1216** having embedded therein the received communication signals **110** or **112**. In a repeater configuration, receiver waveguide **1208** can receive the wave **1206** from the coupler **1204** and transmitter waveguide **1212** can launch guided wave **1216** onto coupler **1214** as guided wave **1217**. Between receiver waveguide **1208** and transmitter waveguide **1212**, the signal embedded in guided wave **1206** and/or the guided wave **1216** itself can be amplified to correct for signal loss and other inefficiencies associated with guided wave communications or the signal can be received and processed to extract the data contained therein and regenerated for transmission. In an embodiment, the receiver waveguide **1208** can be configured to extract data from the signal, process the data to correct for data errors utilizing for example error correcting codes, and regenerate an updated signal with the cor-

rected data. The transmitter waveguide **1212** can then transmit guided wave **1216** with the updated signal embedded therein. In an embodiment, a signal embedded in guided wave **1206** can be extracted from the transmission and processed for communication with another network and/or one or more other devices via communications interface **205** as communication signals **110** or **112**. Similarly, communication signals **110** or **112** received by the communications interface **205** can be inserted into a transmission of guided wave **1216** that is generated and launched onto coupler **1214** by transmitter waveguide **1212**.

It is noted that although FIG. **12** shows guided wave transmissions **1206** and **1216** entering from the left and exiting to the right respectively, this is merely a simplification and is not intended to be limiting. In other embodiments, receiver waveguide **1208** and transmitter waveguide **1212** can also function as transmitters and receivers respectively, allowing the repeater device **1210** to be bi-directional.

In an embodiment, repeater device **1210** can be placed at locations where there are discontinuities or obstacles on the wire **1202** or other transmission medium. In the case where the wire **1202** is a power line, these obstacles can include transformers, connections, utility poles, and other such power line devices. The repeater device **1210** can help the guided (e.g., surface) waves jump over these obstacles on the line and boost the transmission power at the same time. In other embodiments, a coupler can be used to jump over the obstacle without the use of a repeater device. In that embodiment, both ends of the coupler can be tied or fastened to the wire, thus providing a path for the guided wave to travel without being blocked by the obstacle.

Turning now to FIG. **13**, illustrated is a block diagram **1300** of an example, non-limiting embodiment of a bidirectional repeater in accordance with various aspects described herein. In particular, a bidirectional repeater device **1306** is presented for use in a transmission device, such as transmission device **101** or **102** presented in conjunction with FIG. **1**. It should be noted that while the couplers are illustrated as stub couplers, any other of the coupler designs described herein including arc couplers, antenna or horn couplers, magnetic couplers, or the like, could likewise be used. The bidirectional repeater **1306** can employ diversity paths in the case of when two or more wires or other transmission media are present. Since guided wave transmissions have different transmission efficiencies and coupling efficiencies for transmission medium of different types such as insulated wires, un-insulated wires or other types of transmission media and further, if exposed to the elements, can be affected by weather, and other atmospheric conditions, it can be advantageous to selectively transmit on different transmission media at certain times. In various embodiments, the various transmission media can be designated as a primary, secondary, tertiary, etc. whether or not such designation indicates a preference of one transmission medium over another.

In the embodiment shown, the transmission media include an insulated or uninsulated wire **1302** and an insulated or uninsulated wire **1304** (referred to herein as wires **1302** and **1304**, respectively). The repeater device **1306** uses a receiver coupler **1308** to receive a guided wave traveling along wire **1302** and repeats the transmission using transmitter waveguide **1310** as a guided wave along wire **1304**. In other embodiments, repeater device **1306** can switch from the wire **1304** to the wire **1302**, or can repeat the transmissions along the same paths. Repeater device **1306** can include sensors, or be in communication with sensors (or a network management system **1601** depicted in FIG. **16**A) that indicate conditions that can affect the transmission. Based on the feedback received from the sensors, the repeater device **1306** can make the determination about whether to keep the transmission along the same wire, or transfer the transmission to the other wire.

Turning now to FIG. **14**, illustrated is a block diagram **1400** illustrating an example, non-limiting embodiment of a bidirectional repeater system. In particular, a bidirectional repeater system is presented for use in a transmission device, such as transmission device **101** or **102** presented in conjunction with FIG. **1**. The bidirectional repeater system includes waveguide coupling devices **1402** and **1404** that receive and transmit transmissions from other coupling devices located in a distributed antenna system or backhaul system.

In various embodiments, waveguide coupling device **1402** can receive a transmission from another waveguide coupling device, wherein the transmission has a plurality of subcarriers. Diplexer **1406** can separate the transmission from other transmissions, and direct the transmission to low-noise amplifier ("LNA") **1408**. A frequency mixer **1428**, with help from a local oscillator **1412**, can downshift the transmission (which is in the millimeter-wave band or around 38 GHz in some embodiments) to a lower frequency, such as a cellular band (~1.9 GHz) for a distributed antenna system, a native frequency, or other frequency for a backhaul system. An extractor (or demultiplexer) **1432** can extract the signal on a subcarrier and direct the signal to an output component **1422** for optional amplification, buffering or isolation by power amplifier **1424** for coupling to communications interface **205**. The communications interface **205** can further process the signals received from the power amplifier **1424** or otherwise transmit such signals over a wireless or wired interface to other devices such as a base station, mobile devices, a building, etc. For the signals that are not being extracted at this location, extractor **1432** can redirect them to another frequency mixer **1436**, where the signals are used to modulate a carrier wave generated by local oscillator **1414**. The carrier wave, with its subcarriers, is directed to a power amplifier ("PA") **1416** and is retransmitted by waveguide coupling device **1404** to another system, via diplexer **1420**.

An LNA **1426** can be used to amplify, buffer or isolate signals that are received by the communication interface **205** and then send the signal to a multiplexer **1434** which merges the signal with signals that have been received from waveguide coupling device **1404**. The signals received from coupling device **1404** have been split by diplexer **1420**, and then passed through LNA **1418**, and downshifted in frequency by frequency mixer **1438**. When the signals are combined by multiplexer **1434**, they are upshifted in frequency by frequency mixer **1430**, and then boosted by PA **1410**, and transmitted to another system by waveguide coupling device **1402**. In an embodiment bidirectional repeater system can be merely a repeater without the output device **1422**. In this embodiment, the multiplexer **1434** would not be utilized and signals from LNA **1418** would be directed to mixer **1430** as previously described. It will be appreciated that in some embodiments, the bidirectional repeater system could also be implemented using two distinct and separate unidirectional repeaters. In an alternative embodiment, a bidirectional repeater system could also be a booster or otherwise perform retransmissions without downshifting and upshifting. Indeed in example embodiment, the retransmissions can be based upon receiving a signal or guided wave and performing some signal or guided wave

processing or reshaping, filtering, and/or amplification, prior to retransmission of the signal or guided wave.

Referring now to FIG. **15**, a block diagram **1500** illustrating an example, non-limiting embodiment of a guided wave communications system is shown. This diagram depicts an exemplary environment in which a guided wave communication system, such as the guided wave communication system presented in conjunction with FIG. **1**, can be used.

To provide network connectivity to additional base station devices, a backhaul network that links the communication cells (e.g., microcells and macrocells) to network devices of a core network correspondingly expands. Similarly, to provide network connectivity to a distributed antenna system, an extended communication system that links base station devices and their distributed antennas is desirable. A guided wave communication system **1500** such as shown in FIG. **15** can be provided to enable alternative, increased or additional network connectivity and a waveguide coupling system can be provided to transmit and/or receive guided wave (e.g., surface wave) communications on a transmission medium such as a wire that operates as a single-wire transmission line (e.g., a utility line), and that can be used as a waveguide and/or that otherwise operates to guide the transmission of an electromagnetic wave.

The guided wave communication system **1500** can comprise a first instance of a distribution system **1550** that includes one or more base station devices (e.g., base station device **1504**) that are communicably coupled to a central office **1501** and/or a macrocell site **1502**. Base station device **1504** can be connected by a wired (e.g., fiber and/or cable), or by a wireless (e.g., microwave wireless) connection to the macrocell site **1502** and the central office **1501**. A second instance of the distribution system **1560** can be used to provide wireless voice and data services to mobile device **1522** and to residential and/or commercial establishments **1542** (herein referred to as establishments **1542**). System **1500** can have additional instances of the distribution systems **1550** and **1560** for providing voice and/or data services to mobile devices **1522-1524** and establishments **1542** as shown in FIG. **15**.

Macrocells such as macrocell site **1502** can have dedicated connections to a mobile network and base station device **1504** or can share and/or otherwise use another connection. Central office **1501** can be used to distribute media content and/or provide internet service provider (ISP) services to mobile devices **1522-1524** and establishments **1542**. The central office **1501** can receive media content from a constellation of satellites **1530** (one of which is shown in FIG. **15**) or other sources of content, and distribute such content to mobile devices **1522-1524** and establishments **1542** via the first and second instances of the distribution system **1550** and **1560**. The central office **1501** can also be communicatively coupled to the Internet **1503** for providing internet data services to mobile devices **1522-1524** and establishments **1542**.

Base station device **1504** can be mounted on, or attached to, utility pole **1516**. In other embodiments, base station device **1504** can be near transformers and/or other locations situated nearby a power line. Base station device **1504** can facilitate connectivity to a mobile network for mobile devices **1522** and **1524**. Antennas **1512** and **1514**, mounted on or near utility poles **1518** and **1520**, respectively, can receive signals from base station device **1504** and transmit those signals to mobile devices **1522** and **1524** over a much wider area than if the antennas **1512** and **1514** were located at or near base station device **1504**.

It is noted that FIG. **15** displays three utility poles, in each instance of the distribution systems **1550** and **1560**, with one base station device, for purposes of simplicity. In other embodiments, utility pole **1516** can have more base station devices, and more utility poles with distributed antennas and/or tethered connections to establishments **1542**.

A transmission device **1506**, such as transmission device **101** or **102** presented in conjunction with FIG. **1**, can transmit a signal from base station device **1504** to antennas **1512** and **1514** via utility or power line(s) that connect the utility poles **1516**, **1518**, and **1520**. To transmit the signal, radio source and/or transmission device **1506** upconverts the signal (e.g., via frequency mixing) from base station device **1504** or otherwise converts the signal from the base station device **1504** to a microwave band signal and the transmission device **1506** launches a microwave band wave that propagates as a guided wave traveling along the utility line or other wire as described in previous embodiments. At utility pole **1518**, another transmission device **1508** receives the guided wave (and optionally can amplify it as needed or desired or operate as a repeater to receive it and regenerate it) and sends it forward as a guided wave on the utility line or other wire. The transmission device **1508** can also extract a signal from the microwave band guided wave and shift it down in frequency or otherwise convert it to its original cellular band frequency (e.g., 1.9 GHz or other defined cellular frequency) or another cellular (or non-cellular) band frequency. An antenna **1512** can wireless transmit the down-shifted signal to mobile device **1522**. The process can be repeated by transmission device **1510**, antenna **1514** and mobile device **1524**, as necessary or desirable.

Transmissions from mobile devices **1522** and **1524** can also be received by antennas **1512** and **1514** respectively. The transmission devices **1508** and **1510** can upshift or otherwise convert the cellular band signals to microwave band and transmit the signals as guided wave (e.g., surface wave or other electromagnetic wave) transmissions over the power line(s) to base station device **1504**.

Media content received by the central office **1501** can be supplied to the second instance of the distribution system **1560** via the base station device **1504** for distribution to mobile devices **1522** and establishments **1542**. The transmission device **1510** can be tethered to the establishments **1542** by one or more wired connections or a wireless interface. The one or more wired connections may include without limitation, a power line, a coaxial cable, a fiber cable, a twisted pair cable, a guided wave transmission medium or other suitable wired mediums for distribution of media content and/or for providing internet services. In an example embodiment, the wired connections from the transmission device **1510** can be communicatively coupled to one or more very high bit rate digital subscriber line (VDSL) modems located at one or more corresponding service area interfaces (SAIs—not shown) or pedestals, each SAI or pedestal providing services to a portion of the establishments **1542**. The VDSL modems can be used to selectively distribute media content and/or provide internet services to gateways (not shown) located in the establishments **1542**. The SAIs or pedestals can also be communicatively coupled to the establishments **1542** over a wired medium such as a power line, a coaxial cable, a fiber cable, a twisted pair cable, a guided wave transmission medium or other suitable wired mediums. In other example embodiments, the transmission device **1510** can be communicatively coupled directly to establishments **1542** without intermediate interfaces such as the SAIs or pedestals.

In another example embodiment, system **1500** can employ diversity paths, where two or more utility lines or other wires are strung between the utility poles **1516**, **1518**, and **1520** (e.g., for example, two or more wires between poles **1516** and **1520**) and redundant transmissions from base station/macrocell site **1502** are transmitted as guided waves down the surface of the utility lines or other wires. The utility lines or other wires can be either insulated or uninsulated, and depending on the environmental conditions that cause transmission losses, the coupling devices can selectively receive signals from the insulated or uninsulated utility lines or other wires. The selection can be based on measurements of the signal-to-noise ratio of the wires, or based on determined weather/environmental conditions (e.g., moisture detectors, weather forecasts, etc.). The use of diversity paths with system **1500** can enable alternate routing capabilities, load balancing, increased load handling, concurrent bi-directional or synchronous communications, spread spectrum communications, etc.

It is noted that the use of the transmission devices **1506**, **1508**, and **1510** in FIG. **15** are by way of example only, and that in other embodiments, other uses are possible. For instance, transmission devices can be used in a backhaul communication system, providing network connectivity to base station devices. Transmission devices **1506**, **1508**, and **1510** can be used in many circumstances where it is desirable to transmit guided wave communications over a wire, whether insulated or not insulated. Transmission devices **1506**, **1508**, and **1510** are improvements over other coupling devices due to no contact or limited physical and/or electrical contact with the wires that may carry high voltages. The transmission device can be located away from the wire (e.g., spaced apart from the wire) and/or located on the wire so long as it is not electrically in contact with the wire, as the dielectric acts as an insulator, allowing for cheap, easy, and/or less complex installation. However, as previously noted conducting or non-dielectric couplers can be employed, for example in configurations where the wires correspond to a telephone network, cable television network, broadband data service, fiber optic communications system or other network employing low voltages or having insulated transmission lines.

It is further noted, that while base station device **1504** and macrocell site **1502** are illustrated in an embodiment, other network configurations are likewise possible. For example, devices such as access points or other wireless gateways can be employed in a similar fashion to extend the reach of other networks such as a wireless local area network, a wireless personal area network or other wireless network that operates in accordance with a communication protocol such as a 802.11 protocol, WIMAX protocol, UltraWideband protocol, Bluetooth protocol, Zigbee protocol or other wireless protocol.

Referring now to FIGS. **16**A, **16**B and **16**C, block diagrams illustrating an example, non-limiting embodiment of a system for managing a communication system are shown. Considering FIG. **16**A, a waveguide system **1602** is presented for use in a guided wave communications system, such as the system presented in conjunction with FIG. **15**. The waveguide system **1602** can comprise sensors **1604**, a power management system **1605**, a transmission device **101** or **102** that includes at least one communication interface **205**, transceiver **210** and coupler **220**.

The waveguide system **1602** can be coupled to a power line **1610** for facilitating guided wave communications in accordance with embodiments described in the subject disclosure. In an example embodiment, the transmission device **101** or **102** includes coupler **220** for inducing electromagnetic waves on a surface of the power line **1610** that longitudinally propagate along the surface of the power line **1610** as described in the subject disclosure. The transmission device **101** or **102** can also serve as a repeater for retransmitting electromagnetic waves on the same power line **1610** or for routing electromagnetic waves between power lines **1610** as shown in FIGS. **12-13**.

The transmission device **101** or **102** includes transceiver **210** configured to, for example, up-convert a signal operating at an original frequency range to electromagnetic waves operating at, exhibiting, or associated with a carrier frequency that propagate along a coupler to induce corresponding guided electromagnetic waves that propagate along a surface of the power line **1610**. A carrier frequency can be represented by a center frequency having upper and lower cutoff frequencies that define the bandwidth of the electromagnetic waves. The power line **1610** can be a wire (e.g., single stranded or multi-stranded) having a conducting surface or insulated surface. The transceiver **210** can also receive signals from the coupler **220** and down-convert the electromagnetic waves operating at a carrier frequency to signals at their original frequency.

Signals received by the communications interface **205** of transmission device **101** or **102** for up-conversion can include without limitation signals supplied by a central office **1611** over a wired or wireless interface of the communications interface **205**, a base station **1614** over a wired or wireless interface of the communications interface **205**, wireless signals transmitted by mobile devices **1620** to the base station **1614** for delivery over the wired or wireless interface of the communications interface **205**, signals supplied by in-building communication devices **1618** over the wired or wireless interface of the communications interface **205**, and/or wireless signals supplied to the communications interface **205** by mobile devices **1612** roaming in a wireless communication range of the communications interface **205**. In embodiments where the waveguide system **1602** functions as a repeater, such as shown in FIGS. **12-13**, the communications interface **205** may or may not be included in the waveguide system **1602**.

The electromagnetic waves propagating along the surface of the power line **1610** can be modulated and formatted to include packets or frames of data that include a data payload and further include networking information (such as header information for identifying one or more destination waveguide systems **1602**). The networking information may be provided by the waveguide system **1602** or an originating device such as the central office **1611**, the base station **1614**, mobile devices **1620**, or in-building devices **1618**, or a combination thereof. Additionally, the modulated electromagnetic waves can include error correction data for mitigating signal disturbances. The networking information and error correction data can be used by a destination waveguide system **1602** for detecting transmissions directed to it, and for down-converting and processing with error correction data transmissions that include voice and/or data signals directed to recipient communication devices communicatively coupled to the destination waveguide system **1602**.

Referring now to the sensors **1604** of the waveguide system **1602**, the sensors **1604** can comprise one or more of a temperature sensor **1604***a*, a disturbance detection sensor **1604***b*, a loss of energy sensor **1604***c*, a noise sensor **1604***d*, a vibration sensor **1604***e*, an environmental (e.g., weather) sensor **1604***f*, and/or an image sensor **1604***g*. The temperature sensor **1604***a* can be used to measure ambient temperature, a temperature of the transmission device **101** or **102**, a

temperature of the power line **1610**, temperature differentials (e.g., compared to a setpoint or baseline, between transmission device **101** or **102** and **1610**, etc.), or any combination thereof. In one embodiment, temperature metrics can be collected and reported periodically to a network management system **1601** by way of the base station **1614**.

The disturbance detection sensor **1604***b* can perform measurements on the power line **1610** to detect disturbances such as signal reflections, which may indicate a presence of a downstream disturbance that may impede the propagation of electromagnetic waves on the power line **1610**. A signal reflection can represent a distortion resulting from, for example, an electromagnetic wave transmitted on the power line **1610** by the transmission device **101** or **102** that reflects in whole or in part back to the transmission device **101** or **102** from a disturbance in the power line **1610** located downstream from the transmission device **101** or **102**.

Signal reflections can be caused by obstructions on the power line **1610**. For example, a tree limb may cause electromagnetic wave reflections when the tree limb is lying on the power line **1610**, or is in close proximity to the power line **1610** which may cause a corona discharge. Other obstructions that can cause electromagnetic wave reflections can include without limitation an object that has been entangled on the power line **1610** (e.g., clothing, a shoe wrapped around a power line **1610** with a shoe string, etc.), a corroded build-up on the power line **1610** or an ice build-up. Power grid components may also impede or obstruct with the propagation of electromagnetic waves on the surface of power lines **1610**. Illustrations of power grid components that may cause signal reflections include without limitation a transformer and a joint for connecting spliced power lines. A sharp angle on the power line **1610** may also cause electromagnetic wave reflections.

The disturbance detection sensor **1604***b* can comprise a circuit to compare magnitudes of electromagnetic wave reflections to magnitudes of original electromagnetic waves transmitted by the transmission device **101** or **102** to determine how much a downstream disturbance in the power line **1610** attenuates transmissions. The disturbance detection sensor **1604***b* can further comprise a spectral analyzer circuit for performing spectral analysis on the reflected waves. The spectral data generated by the spectral analyzer circuit can be compared with spectral profiles via pattern recognition, an expert system, curve fitting, matched filtering or other artificial intelligence, classification or comparison technique to identify a type of disturbance based on, for example, the spectral profile that most closely matches the spectral data. The spectral profiles can be stored in a memory of the disturbance detection sensor **1604***b* or may be remotely accessible by the disturbance detection sensor **1604***b*. The profiles can comprise spectral data that models different disturbances that may be encountered on power lines **1610** to enable the disturbance detection sensor **1604***b* to identify disturbances locally. An identification of the disturbance if known can be reported to the network management system **1601** by way of the base station **1614**. The disturbance detection sensor **1604***b* can also utilize the transmission device **101** or **102** to transmit electromagnetic waves as test signals to determine a roundtrip time for an electromagnetic wave reflection. The round trip time measured by the disturbance detection sensor **1604***b* can be used to calculate a distance traveled by the electromagnetic wave up to a point where the reflection takes place, which enables the disturbance detection sensor **1604***b* to calculate a distance from the transmission device **101** or **102** to the downstream disturbance on the power line **1610**.

The distance calculated can be reported to the network management system **1601** by way of the base station **1614**. In one embodiment, the location of the waveguide system **1602** on the power line **1610** may be known to the network management system **1601**, which the network management system **1601** can use to determine a location of the disturbance on the power line **1610** based on a known topology of the power grid. In another embodiment, the waveguide system **1602** can provide its location to the network management system **1601** to assist in the determination of the location of the disturbance on the power line **1610**. The location of the waveguide system **1602** can be obtained by the waveguide system **1602** from a pre-programmed location of the waveguide system **1602** stored in a memory of the waveguide system **1602**, or the waveguide system **1602** can determine its location using a GPS receiver (not shown) included in the waveguide system **1602**.

The power management system **1605** provides energy to the aforementioned components of the waveguide system **1602**. The power management system **1605** can receive energy from solar cells, or from a transformer (not shown) coupled to the power line **1610**, or by inductive coupling to the power line **1610** or another nearby power line. The power management system **1605** can also include a backup battery and/or a super capacitor or other capacitor circuit for providing the waveguide system **1602** with temporary power. The loss of energy sensor **1604***c* can be used to detect when the waveguide system **1602** has a loss of power condition and/or the occurrence of some other malfunction. For example, the loss of energy sensor **1604***c* can detect when there is a loss of power due to defective solar cells, an obstruction on the solar cells that causes them to malfunction, loss of power on the power line **1610**, and/or when the backup power system malfunctions due to expiration of a backup battery, or a detectable defect in a super capacitor. When a malfunction and/or loss of power occurs, the loss of energy sensor **1604***c* can notify the network management system **1601** by way of the base station **1614**.

The noise sensor **1604***d* can be used to measure noise on the power line **1610** that may adversely affect transmission of electromagnetic waves on the power line **1610**. The noise sensor **1604***d* can sense unexpected electromagnetic interference, noise bursts, or other sources of disturbances that may interrupt reception of modulated electromagnetic waves on a surface of a power line **1610**. A noise burst can be caused by, for example, a corona discharge, or other source of noise. The noise sensor **1604***d* can compare the measured noise to a noise profile obtained by the waveguide system **1602** from an internal database of noise profiles or from a remotely located database that stores noise profiles via pattern recognition, an expert system, curve fitting, matched filtering or other artificial intelligence, classification or comparison technique. From the comparison, the noise sensor **1604***d* may identify a noise source (e.g., corona discharge or otherwise) based on, for example, the noise profile that provides the closest match to the measured noise. The noise sensor **1604***d* can also detect how noise affects transmissions by measuring transmission metrics such as bit error rate, packet loss rate, jitter, packet retransmission requests, etc. The noise sensor **1604***d* can report to the network management system **1601** by way of the base station **1614** the identity of noise sources, their time of occurrence, and transmission metrics, among other things.

The vibration sensor **1604***e* can include accelerometers and/or gyroscopes to detect 2D or 3D vibrations on the power line **1610**. The vibrations can be compared to vibration profiles that can be stored locally in the waveguide

system **1602**, or obtained by the waveguide system **1602** from a remote database via pattern recognition, an expert system, curve fitting, matched filtering or other artificial intelligence, classification or comparison technique. Vibration profiles can be used, for example, to distinguish fallen trees from wind gusts based on, for example, the vibration profile that provides the closest match to the measured vibrations. The results of this analysis can be reported by the vibration sensor **1604***e* to the network management system **1601** by way of the base station **1614**.

The environmental sensor **1604***f* can include a barometer for measuring atmospheric pressure, ambient temperature (which can be provided by the temperature sensor **1604***a*), wind speed, humidity, wind direction, and rainfall, among other things. The environmental sensor **1604***f* can collect raw information and process this information by comparing it to environmental profiles that can be obtained from a memory of the waveguide system **1602** or a remote database to predict weather conditions before they arise via pattern recognition, an expert system, knowledge-based system or other artificial intelligence, classification or other weather modeling and prediction technique. The environmental sensor **1604***f* can report raw data as well as its analysis to the network management system **1601**.

The image sensor **1604***g* can be a digital camera (e.g., a charged coupled device or CCD imager, infrared camera, etc.) for capturing images in a vicinity of the waveguide system **1602**. The image sensor **1604***g* can include an electromechanical mechanism to control movement (e.g., actual position or focal points/zooms) of the camera for inspecting the power line **1610** from multiple perspectives (e.g., top surface, bottom surface, left surface, right surface and so on). Alternatively, the image sensor **1604***g* can be designed such that no electromechanical mechanism is needed in order to obtain the multiple perspectives. The collection and retrieval of imaging data generated by the image sensor **1604***g* can be controlled by the network management system **1601**, or can be autonomously collected and reported by the image sensor **1604***g* to the network management system **1601**.

Other sensors that may be suitable for collecting telemetry information associated with the waveguide system **1602** and/or the power lines **1610** for purposes of detecting, predicting and/or mitigating disturbances that can impede the propagation of electromagnetic wave transmissions on power lines **1610** (or any other form of a transmission medium of electromagnetic waves) may be utilized by the waveguide system **1602**.

To mitigate harsh winter conditions, the waveguide system **1602** of FIG. **16**A can be adapted to use a heater system **1630** such as depicted in FIG. **16**B. The heater system **1630** can comprise a toroidal inductor **1631** that surrounds a cross-sectional view of a transmission medium **1633**, such as the power line **1610** shown in FIG. **16**A. The toroidal inductor **1631** can be constructed of multiple turns of wire **1636** wrapped around an annular toroid of powdered iron or other ferrite (referred to herein, for illustration purposes, as a ferrite core **1637**). In an embodiment where the transmission medium **1633** is a bare wire, a dielectric washer or other insulator **1635** can provide electrical insulation while supporting the wire within the toroidal inductor **1631**. Such a dielectric washer can be constructed of Teflon, polystyrene, polyethylene or other dielectric or insulating material. In cases where the transmission medium **1633** is nonconductive or includes an insulating sheath or jacket, the dielectric washer can be eliminated.

A power signal conducted by the transmission medium **1633** (e.g., 60 Hz or 50 Hz medium voltage power signal) can induce currents in the wire **1636** wrapped around the ferrite core **1637**. The current induced in the wire **1636** can feed a heating element (e.g., a resistor) **1632**. To control activation of the heating element **1632**, the heating element **1632** can include a controllable switch (not shown) that can be opened to break the circuit formed by the wire **1636** and the heating element **1632**, and thereby disable the heating element **1632**. When the switch is closed and current begins to flow in the circuit, the heating element **1632** is enabled and thereby emits heat.

In one embodiment, the waveguide system **1602** of FIG. **16**A can utilize the temperature sensor **1604***a* to measure an internal temperature of the waveguide system **1602** and/or an ambient temperature in a vicinity of the waveguide system **1602**. In an embodiment, the waveguide system **1602** can use the image sensor **1604***g* singly or in combination with the temperature sensor **1604***a*. The image sensor **1604***g* can be used to determine if ice and/or snow is accumulating on an outer surface of the waveguide system **1602**. To place the toroidal inductor **1631** on a transmission medium **1633**, such as a power line, the toroidal inductor **1631** can be inserted into the transmission medium **1633** through a middle cavity opening of the toroidal inductor **1631** if the power line has an open endpoint, or can be separated mechanically at the dashed lines **1639**. In the latter embodiment, the toroidal inductor **1631** can be separated to enable placement on the transmission medium **1633** and reattached with a hinge, latch or other mechanical features during an installation process of the waveguide system **1602** on the power line.

Turning now to FIG. **16**D, flow diagram of an example, non-limiting embodiment of a method **1670** in accordance with various aspects described herein is shown. Method **1670** can begin with step **1672** where the waveguide system **1602** monitors the environment using the temperature sensor **1604***a* and/or the image sensor **1604***g* as described above. It the waveguide system **1602** determines at step **1674** that the measured temperature (internal and/or ambient) falls below one or more thresholds (e.g., 32° F.) and/or images indicate there is an accumulation of ice and/or snow on a housing assembly of the waveguide system **1602**, a circuit **1634** shown in FIG. **16**B can generate at step **1676** a signal that causes the switch used by the heating element **1632** to close and thereby cause current to flow through the heating element **1632** to emit heat inside the waveguide system **1602**. The circuit **1634** can be a controller (e.g., a microprocessor) of the waveguide system **1602**. The heat emitted inside the housing assembly of the waveguide system **1602** can be used to prevent malfunction of circuits used by the waveguide system **1602** due to severe weather conditions.

Additionally, the heat emitted by the heating element **1632** may radiate sufficiently to heat the housing assembly of the waveguide system **1602** and thereby cause snow or ice to melt. Once the waveguide system **1602** detects at steps **1672** that the temperature and/or snow or ice accumulation has dissipated, the waveguide system **1602** can proceed to step **1678** to disable the heating element **1632** by the circuit **1634** emitting a signal that causes the switch to open and break the circuit to prevent current flow in the heating element **1632**. To maintain a steady temperature that prevents ice and/or snow accumulation, the steps of method **1670** can be adapted to operate as a thermostat that maintains a near constant temperature of the waveguide system **1602** to preemptively prevent snow and/or ice accumulation on the housing assembly of the waveguide system **1602**.

While for purposes of simplicity of explanation, the respective processes are shown and described as a series of blocks in FIG. **16**D, it is to be understood and appreciated that the claimed subject matter is not limited by the order of the blocks, as some blocks may occur in different orders and/or concurrently with other blocks from what is depicted and described herein. Moreover, not all illustrated blocks may be required to implement the methods described herein.

Referring now to FIG. **16**C, block diagram **1650** illustrates an example, non-limiting embodiment of a system for managing a power grid **1653** and a communication system **1655** embedded therein or associated therewith in accordance with various aspects described herein. The communication system **1655** comprises a plurality of waveguide systems **1602** coupled to power lines **1610** of the power grid **1653**. At least a portion of the waveguide systems **1602** used in the communication system **1655** can be in direct communication with a base station **1614** and/or the network management system **1601**. Waveguide systems **1602** not directly connected to a base station **1614** or the network management system **1601** can engage in communication sessions with either a base station **1614** or the network management system **1601** by way of other downstream waveguide systems **1602** connected to a base station **1614** or the network management system **1601**.

The network management system **1601** can be communicatively coupled to equipment of a utility company **1652** and equipment of a communications service provider **1654** for providing each entity, status information associated with the power grid **1653** and the communication system **1655**, respectively. The network management system **1601**, the equipment of the utility company **1652**, and the communications service provider **1654** can access communication devices utilized by utility company personnel **1656** and/or communication devices utilized by communications service provider personnel **1658** for purposes of providing status information and/or for directing such personnel in the management of the power grid **1653** and/or communication system **1655**.

FIG. **17**A illustrates a flow diagram of an example, non-limiting embodiment of a method **1700** for detecting and mitigating disturbances occurring in a communication network of the systems of FIGS. **16**A-**16**C. Method **1700** can begin with step **1702** where a waveguide system **1602** transmits and receives messages embedded in, or forming part of, modulated electromagnetic waves or another type of electromagnetic waves traveling along a surface of a power line **1610**. The messages can be voice messages, streaming video, and/or other data/information exchanged between communication devices communicatively coupled to the communication system **1655**. At step **1704** the sensors **1604** of the waveguide system **1602** can collect sensing data. In an embodiment, the sensing data can be collected in step **1704** prior to, during, or after the transmission and/or receipt of messages in step **1702**. At step **1706** the waveguide system **1602** (or the sensors **1604** themselves) can determine from the sensing data an actual or predicted occurrence of a disturbance in the communication system **1655** that can affect communications originating from (e.g., transmitted by) or received by the waveguide system **1602**. The waveguide system **1602** (or the sensors **1604**) can process temperature data, signal reflection data, loss of energy data, noise data, vibration data, environmental data, or any combination thereof to make this determination. The waveguide system **1602** (or the sensors **1604**) may also detect, identify, estimate, or predict the source of the disturbance and/or its location in the communication system **1655**. If a disturbance is neither detected/identified nor predicted/estimated at step **1708**, the waveguide system **1602** can proceed to step **1702** where it continues to transmit and receive messages embedded in, or forming part of, modulated electromagnetic waves traveling along a surface of the power line **1610**.

If at step **1708** a disturbance is detected/identified or predicted/estimated to occur, the waveguide system **1602** proceeds to step **1710** to determine if the disturbance adversely affects (or alternatively, is likely to adversely affect or the extent to which it may adversely affect) transmission or reception of messages in the communication system **1655**. In one embodiment, a duration threshold and a frequency of occurrence threshold can be used at step **1710** to determine when a disturbance adversely affects communications in the communication system **1655**. For illustration purposes only, assume a duration threshold is set to 500 ms, while a frequency of occurrence threshold is set to 5 disturbances occurring in an observation period of 10 sec. Thus, a disturbance having a duration greater than 500 ms will trigger the duration threshold. Additionally, any disturbance occurring more than 5 times in a 10 sec time interval will trigger the frequency of occurrence threshold.

In one embodiment, a disturbance may be considered to adversely affect signal integrity in the communication systems **1655** when the duration threshold alone is exceeded. In another embodiment, a disturbance may be considered as adversely affecting signal integrity in the communication systems **1655** when both the duration threshold and the frequency of occurrence threshold are exceeded. The latter embodiment is thus more conservative than the former embodiment for classifying disturbances that adversely affect signal integrity in the communication system **1655**. It will be appreciated that many other algorithms and associated parameters and thresholds can be utilized for step **1710** in accordance with example embodiments.

Referring back to method **1700**, if at step **1710** the disturbance detected at step **1708** does not meet the condition for adversely affected communications (e.g., neither exceeds the duration threshold nor the frequency of occurrence threshold), the waveguide system **1602** may proceed to step **1702** and continue processing messages. For instance, if the disturbance detected in step **1708** has a duration of 1 msec with a single occurrence in a 10 sec time period, then neither threshold will be exceeded. Consequently, such a disturbance may be considered as having a nominal effect on signal integrity in the communication system **1655** and thus would not be flagged as a disturbance requiring mitigation. Although not flagged, the occurrence of the disturbance, its time of occurrence, its frequency of occurrence, spectral data, and/or other useful information, may be reported to the network management system **1601** as telemetry data for monitoring purposes.

Referring back to step **1710**, if on the other hand the disturbance satisfies the condition for adversely affected communications (e.g., exceeds either or both thresholds), the waveguide system **1602** can proceed to step **1712** and report the incident to the network management system **1601**. The report can include raw sensing data collected by the sensors **1604**, a description of the disturbance if known by the waveguide system **1602**, a time of occurrence of the disturbance, a frequency of occurrence of the disturbance, a location associated with the disturbance, parameters readings such as bit error rate, packet loss rate, retransmission requests, jitter, latency and so on. If the disturbance is based on a prediction by one or more sensors of the waveguide system **1602**, the report can include a type of disturbance expected, and if predictable, an expected time occurrence of

the disturbance, and an expected frequency of occurrence of the predicted disturbance when the prediction is based on historical sensing data collected by the sensors **1604** of the waveguide system **1602**.

At step **1714**, the network management system **1601** can determine a mitigation, circumvention, or correction technique, which may include directing the waveguide system **1602** to reroute traffic to circumvent the disturbance if the location of the disturbance can be determined. In one embodiment, the waveguide coupling device **1402** detecting the disturbance may direct a repeater such as the one shown in FIGS. **13-14** to connect the waveguide system **1602** from a primary power line affected by the disturbance to a secondary power line to enable the waveguide system **1602** to reroute traffic to a different transmission medium and avoid the disturbance. In an embodiment where the waveguide system **1602** is configured as a repeater the waveguide system **1602** can itself perform the rerouting of traffic from the primary power line to the secondary power line. It is further noted that for bidirectional communications (e.g., full or half-duplex communications), the repeater can be configured to reroute traffic from the secondary power line back to the primary power line for processing by the waveguide system **1602**.

In another embodiment, the waveguide system **1602** can redirect traffic by instructing a first repeater situated upstream of the disturbance and a second repeater situated downstream of the disturbance to redirect traffic from a primary power line temporarily to a secondary power line and back to the primary power line in a manner that avoids the disturbance. It is further noted that for bidirectional communications (e.g., full or half-duplex communications), repeaters can be configured to reroute traffic from the secondary power line back to the primary power line.

To avoid interrupting existing communication sessions occurring on a secondary power line, the network management system **1601** may direct the waveguide system **1602** to instruct repeater(s) to utilize unused time slot(s) and/or frequency band(s) of the secondary power line for redirecting data and/or voice traffic away from the primary power line to circumvent the disturbance.

At step **1716**, while traffic is being rerouted to avoid the disturbance, the network management system **1601** can notify equipment of the utility company **1652** and/or equipment of the communications service provider **1654**, which in turn may notify personnel of the utility company **1656** and/or personnel of the communications service provider **1658** of the detected disturbance and its location if known. Field personnel from either party can attend to resolving the disturbance at a determined location of the disturbance. Once the disturbance is removed or otherwise mitigated by personnel of the utility company and/or personnel of the communications service provider, such personnel can notify their respective companies and/or the network management system **1601** utilizing field equipment (e.g., a laptop computer, smartphone, etc.) communicatively coupled to network management system **1601**, and/or equipment of the utility company and/or the communications service provider. The notification can include a description of how the disturbance was mitigated and any changes to the power lines **1610** that may change a topology of the communication system **1655**.

Once the disturbance has been resolved (as determined in decision **1718**), the network management system **1601** can direct the waveguide system **1602** at step **1720** to restore the previous routing configuration used by the waveguide system **1602** or route traffic according to a new routing configuration if the restoration strategy used to mitigate the disturbance resulted in a new network topology of the communication system **1655**. In another embodiment, the waveguide system **1602** can be configured to monitor mitigation of the disturbance by transmitting test signals on the power line **1610** to determine when the disturbance has been removed. Once the waveguide system **1602** detects an absence of the disturbance it can autonomously restore its routing configuration without assistance by the network management system **1601** if it determines the network topology of the communication system **1655** has not changed, or it can utilize a new routing configuration that adapts to a detected new network topology.

FIG. **17**B illustrates a flow diagram of an example, non-limiting embodiment of a method **1750** for detecting and mitigating disturbances occurring in a communication network of the system of FIGS. **16**A-**16**C. In one embodiment, method **1750** can begin with step **1752** where a network management system **1601** receives from equipment of the utility company **1652** or equipment of the communications service provider **1654** maintenance information associated with a maintenance schedule. The network management system **1601** can at step **1754** identify from the maintenance information, maintenance activities to be performed during the maintenance schedule. From these activities, the network management system **1601** can detect a disturbance resulting from the maintenance (e.g., scheduled replacement of a power line **1610**, scheduled replacement of a waveguide system **1602** on the power line **1610**, scheduled reconfiguration of power lines **1610** in the power grid **1653**, etc.).

In another embodiment, the network management system **1601** can receive at step **1755** telemetry information from one or more waveguide systems **1602**. The telemetry information can include among other things an identity of each waveguide system **1602** submitting the telemetry information, measurements taken by sensors **1604** of each waveguide system **1602**, information relating to predicted, estimated, or actual disturbances detected by the sensors **1604** of each waveguide system **1602**, location information associated with each waveguide system **1602**, an estimated location of a detected disturbance, an identification of the disturbance, and so on. The network management system **1601** can determine from the telemetry information a type of disturbance that may be adverse to operations of the waveguide, transmission of the electromagnetic waves along the wire surface, or both. The network management system **1601** can also use telemetry information from multiple waveguide systems **1602** to isolate and identify the disturbance. Additionally, the network management system **1601** can request telemetry information from waveguide systems **1602** in a vicinity of an affected waveguide system **1602** to triangulate a location of the disturbance and/or validate an identification of the disturbance by receiving similar telemetry information from other waveguide systems **1602**.

In yet another embodiment, the network management system **1601** can receive at step **1756** an unscheduled activity report from maintenance field personnel. Unscheduled maintenance may occur as result of field calls that are unplanned or as a result of unexpected field issues discovered during field calls or scheduled maintenance activities. The activity report can identify changes to a topology configuration of the power grid **1653** resulting from field personnel addressing discovered issues in the communication system **1655** and/or power grid **1653**, changes to one or

more waveguide systems **1602** (such as replacement or repair thereof), mitigation of disturbances performed if any, and so on.

At step **1758**, the network management system **1601** can determine from reports received according to steps **1752** through **1756** if a disturbance will occur based on a maintenance schedule, or if a disturbance has occurred or is predicted to occur based on telemetry data, or if a disturbance has occurred due to an unplanned maintenance identified in a field activity report. From any of these reports, the network management system **1601** can determine whether a detected or predicted disturbance requires rerouting of traffic by the affected waveguide systems **1602** or other waveguide systems **1602** of the communication system **1655**.

When a disturbance is detected or predicted at step **1758**, the network management system **1601** can proceed to step **1760** where it can direct one or more waveguide systems **1602** to reroute traffic to circumvent the disturbance. When the disturbance is permanent due to a permanent topology change of the power grid **1653**, the network management system **1601** can proceed to step **1770** and skip steps **1762**, **1764**, **1766**, and **1772**. At step **1770**, the network management system **1601** can direct one or more waveguide systems **1602** to use a new routing configuration that adapts to the new topology. However, when the disturbance has been detected from telemetry information supplied by one or more waveguide systems **1602**, the network management system **1601** can notify maintenance personnel of the utility company **1656** or the communications service provider **1658** of a location of the disturbance, a type of disturbance if known, and related information that may be helpful to such personnel to mitigate the disturbance. When a disturbance is expected due to maintenance activities, the network management system **1601** can direct one or more waveguide systems **1602** to reconfigure traffic routes at a given schedule (consistent with the maintenance schedule) to avoid disturbances caused by the maintenance activities during the maintenance schedule.

Returning back to step **1760** and upon its completion, the process can continue with step **1762**. At step **1762**, the network management system **1601** can monitor when the disturbance(s) have been mitigated by field personnel. Mitigation of a disturbance can be detected at step **1762** by analyzing field reports submitted to the network management system **1601** by field personnel over a communications network (e.g., cellular communication system) utilizing field equipment (e.g., a laptop computer or handheld computer/device). If field personnel have reported that a disturbance has been mitigated, the network management system **1601** can proceed to step **1764** to determine from the field report whether a topology change was required to mitigate the disturbance. A topology change can include rerouting a power line **1610**, reconfiguring a waveguide system **1602** to utilize a different power line **1610**, otherwise utilizing an alternative link to bypass the disturbance and so on. If a topology change has taken place, the network management system **1601** can direct at step **1770** one or more waveguide systems **1602** to use a new routing configuration that adapts to the new topology.

If, however, a topology change has not been reported by field personnel, the network management system **1601** can proceed to step **1766** where it can direct one or more waveguide systems **1602** to send test signals to test a routing configuration that had been used prior to the detected disturbance(s). Test signals can be sent to affected waveguide systems **1602** in a vicinity of the disturbance. The test signals can be used to determine if signal disturbances (e.g., electromagnetic wave reflections) are detected by any of the waveguide systems **1602**. If the test signals confirm that a prior routing configuration is no longer subject to previously detected disturbance(s), then the network management system **1601** can at step **1772** direct the affected waveguide systems **1602** to restore a previous routing configuration. If, however, test signals analyzed by one or more waveguide coupling device **1402** and reported to the network management system **1601** indicate that the disturbance(s) or new disturbance(s) are present, then the network management system **1601** will proceed to step **1768** and report this information to field personnel to further address field issues. The network management system **1601** can in this situation continue to monitor mitigation of the disturbance(s) at step **1762**.

In the aforementioned embodiments, the waveguide systems **1602** can be configured to be self-adapting to changes in the power grid **1653** and/or to mitigation of disturbances. That is, one or more affected waveguide systems **1602** can be configured to self-monitor mitigation of disturbances and reconfigure traffic routes without requiring instructions to be sent to them by the network management system **1601**. In this embodiment, the one or more waveguide systems **1602** that are self-configurable can inform the network management system **1601** of its routing choices so that the network management system **1601** can maintain a macro-level view of the communication topology of the communication system **1655**.

While for purposes of simplicity of explanation, the respective processes are shown and described as a series of blocks in FIGS. **17**A and **17**B, respectively, it is to be understood and appreciated that the claimed subject matter is not limited by the order of the blocks, as some blocks may occur in different orders and/or concurrently with other blocks from what is depicted and described herein. Moreover, not all illustrated blocks may be required to implement the methods described herein.

Turning now to FIG. **18**, a block diagram illustrating an example, non-limiting embodiment of a cross-sectional view of transmission media **1800** in accordance with various aspects described herein is shown. In one embodiment, transmission media **1800** can comprise a bundle of power lines sharing a common cable. FIG. **18** depicts a first power line **1804**, a second power line **1806**, and a third power line **1808** sharing a common cable **1802** that may itself be either another power line or a support cable used to support the bundle. Other configurations of more or fewer power lines can be used in accordance with the embodiments of the subject disclosure. The power lines **1804**, **1806** and **1808** and common cable **1802** can be coupled to multiple spacers such as the spacer **1900** depicted in FIG. **19**. Each spacer **1900** can have clamps **1902** which can be used to support the power lines **1804**, **1806** and **1808** and the common cable **1802**. For power lines held by utility poles over long distances, the spacers **1900** can be separated longitudinally from each other such as to achieve a uniform spacing between the power lines **1804**, **1806** and **1808** and the common cable **1802**. The power lines **1804**, **1806** and **1808** can be constructed with insulated or uninsulated conductors. Similarly, the common cable **1802** can be an insulated or uninsulated conductor.

In various embodiments, the bundle of power lines **1804**, **1806** and **1808** share the common cable **1802** in order to support multiple electromagnetic communication paths. For example, the separation between the common cable **1802** and the first power line **1804** can form a first twin-lead cable, which can be used for propagating a first electromagnetic

wave **1804'** that propagates longitudinally along the first power line **1804** and the common cable **1802** and at least a portion of the area in between (i.e., in a longitudinal direction that points in and/or out of the page). Similarly, the separation between the common cable **1802** and the second power line **1806** can form a second twin-lead cable, which can be used for propagating a second electromagnetic wave **1806'** that propagates longitudinally along the second power line **1806** and the common cable **1802** and at least a portion of the area in between. Lastly, the separation between the common cable **1802** and the third power line **1808** can form a third twin-lead cable, which can be used for propagating a third electromagnetic wave **1808'** that propagates longitudinally along the third power line **1806** and the common cable **1802** and at least a portion of the area in between. Each twin-lead pair can serve as a transmission line for propagation of guided electromagnetic waves.

From the illustration of FIG. **18**, a relationship exists between the number of cables and the number of twin-leads that can be used. Particularly, N−1 twin-leads can be formed from a bundle of cables, where N is a sum of a total number of power lines and the common cable. Based on FIG. **18**, three twin-lead cables (four total cables—one) are possible. Each twin-lead cable can have an impedance range (e.g., from 600 ohms to 75 ohms) that determines an operating frequency range of electromagnetic waves that can be guided by each twin-lead cable (e.g., 3 KHz to 300 GHz).

The embodiments of FIGS. **18-19** can also be combined with the embodiments described earlier for transporting electromagnetic waves on a single transmission medium. For example, a waveguide system **1602** such as described earlier in FIG. **16**A can be configured to exchange electromagnetic waves with other waveguide systems **1602** over the first power line **1804**, while at the same time another system exchanges electromagnetic waves guided by the twin-lead comprising the first power line **1804** and the common cable **1802**. Guided electromagnetic waves can also be transmitted individually on the second power line **1806**, the third power line **1808** and the common cable **1802**. Accordingly, the configuration of FIG. **18**, can be used as seven communication pathways: A) three communication pathways via the three twin-lead cables, and B) four communication pathways via the four cables used for exchanging electromagnetic waves traveling on an outer surface of each cable.

Turning now to FIG. **20**, a flow diagram of an example, non-limiting embodiment of a method **2000** that can be used for exchanging electromagnetic waves with transmission lines depicted in FIG. **18** in accordance with various aspects described herein is shown. Method **2002** can begin with a plurality of launchers receiving a plurality of communication signals. Each launcher can be configured to receive a select one of the communication signals. Each communication signal can include data such as voice, streaming content or other forms of communication data generated by different sources. At step **2004**, the launchers can be configured to transmit a plurality of electromagnetic waves by way of the bundle of transmission media **1800** such as shown in FIG. **18**. Each twin-lead of the bundle of transmission media **1800**, for example, can be connected to a launcher (not shown) which can launch between the power line and the common cable forming an electromagnetic wave guided by the twin-lead, which can propagate longitudinally to a receiver (not shown) at a downstream location. In one embodiment, the plurality of launchers can be integrated with the spacer **1900** of FIG. **19**. Each launcher can have a coupler that, for example, makes contact with a corresponding power lines supported by clamp **1902** to excite an electromagnetic wave at a corresponding cable pairs of each twin lead, including the shared cable.

The launcher can be a radio frequency (RF) transmitter that includes RF circuits for modulating and transmitting RF signals. Similarly, the receiver can be an RF receiver that includes RF circuits for receiving and demodulating RF signals. At step **2006**, downstream receivers, each coupled to a particular twin-lead of the bundle of transmission media **1800**, can receive the electromagnetic wave and retrieve at step **2008** a corresponding communication signal. For bi-directional communications, method **2000** can be adapted so that launchers and receivers are combined to form transceivers at each end such as the transmission devices **101** and **102** of FIG. **1** for transmitting guided waves **120** and **122**, respectively. As noted earlier, the individual cables of the bundled transmission media **1800** can also be used for exchanging electromagnetic waves on an outer surface of each cable. Accordingly, method **2000** can be adapted to use waveguide systems to add more communication pathways if so desired.

It is further noted that a dipole antenna can be used as a launcher to excite and/or extract energy from each twin lead transmission line previously described by the illustration of FIG. **18**. For example, the ends of the dipole antenna can be sized to fit between the conductors of the twin lead (orthogonal to them), can be positioned in a same plane as the spacer **1900** and oriented between the shared cable and corresponding power line in order to send and receive guided wave communication via the corresponding twin lead communication path. In some embodiments, a dipole antenna can be placed where line **1804'** is shown in FIG. **18**, and can be supplied signals at center feed points of the antenna. In one embodiment, the spacer **1900** can be configured with a dipole antenna painted or otherwise integrated onto or molded inside a plastic material of the spacer **1900**. The dimensions of the dipole antenna can dictate an operating frequency of signals supplied to the twin lead. In one embodiment, the electronics of the launcher can be molded into the spacer **1900**, and can be configured to draw power from any two conductors held by the spacer **1900**. In another embodiment, a millimeter wave or terahertz communication device having a small antenna can be positioned at a center location of the spacer **1900** (e.g., diamond shaped null **1903**). The transmitter can be configured to transmit signals that support very high bandwidth communications between spacers **1900** using the open space between the wires supported by the spacers **1900**.

It will be appreciated that the foregoing embodiments can also be adapted without the use of a spacer **1900**. For example, the embodiments of the subject disclosure can be applied to any two parallel suspended conductors as a twin lead transmission line, including those that hang at a top section of a utility pole (without a spacer **1900**). To accommodate variable spacing between conductors not supported by spacers **1900**, an operating frequency of the electromagnetic waves supplied to the twin leads can be lowered to provide reliable communications. In one embodiment, a (dipole) coupler antenna system a Yagi antenna, or other launcher can be attached to a cross arm at a top section of a utility pole to supply electromagnetic wave signals to pairs of power lines (not supported by spacers **1900**) that are being used as a twin lead. Other variants of the subject disclosure are contemplated.

While for purposes of simplicity of explanation, the respective processes are shown and described as a series of blocks in FIG. **20**, it is to be understood and appreciated that

the claimed subject matter is not limited by the order of the blocks, as some blocks may occur in different orders and/or concurrently with other blocks from what is depicted and described herein. Moreover, not all illustrated blocks may be required to implement the methods described herein.

Referring now to FIG. **21**, there is illustrated a block diagram of a computing environment in accordance with various aspects described herein. In order to provide additional context for various embodiments of the embodiments described herein, FIG. **21** and the following discussion are intended to provide a brief, general description of a suitable computing environment **2100** in which the various embodiments of the subject disclosure can be implemented. While the embodiments have been described above in the general context of computer-executable instructions that can run on one or more computers, those skilled in the art will recognize that the embodiments can be also implemented in combination with other program modules and/or as a combination of hardware and software.

Generally, program modules comprise routines, programs, components, data structures, etc., that perform particular tasks or implement particular abstract data types. Moreover, those skilled in the art will appreciate that the inventive methods can be practiced with other computer system configurations, comprising single-processor or multiprocessor computer systems, minicomputers, mainframe computers, as well as personal computers, hand-held computing devices, microprocessor-based or programmable consumer electronics, and the like, each of which can be operatively coupled to one or more associated devices.

As used herein, a processing circuit includes processor as well as other application specific circuits such as an application specific integrated circuit, digital logic circuit, state machine, programmable gate array or other circuit that processes input signals or data and that produces output signals or data in response thereto. It should be noted that while any functions and features described herein in association with the operation of a processor could likewise be performed by a processing circuit.

The terms "first," "second," "third," and so forth, as used in the claims, unless otherwise clear by context, is for clarity only and doesn't otherwise indicate or imply any order in time. For instance, "a first determination," "a second determination," and "a third determination," does not indicate or imply that the first determination is to be made before the second determination, or vice versa, etc.

The illustrated embodiments of the embodiments herein can be also practiced in distributed computing environments where certain tasks are performed by remote processing devices that are linked through a communications network. In a distributed computing environment, program modules can be located in both local and remote memory storage devices.

Computing devices typically comprise a variety of media, which can comprise computer-readable storage media and/or communications media, which two terms are used herein differently from one another as follows. Computer-readable storage media can be any available storage media that can be accessed by the computer and comprises both volatile and nonvolatile media, removable and non-removable media. By way of example, and not limitation, computer-readable storage media can be implemented in connection with any method or technology for storage of information such as computer-readable instructions, program modules, structured data or unstructured data.

Computer-readable storage media can comprise, but are not limited to, random access memory (RAM), read only memory (ROM), electrically erasable programmable read only memory (EEPROM), flash memory or other memory technology, compact disk read only memory (CD-ROM), digital versatile disk (DVD) or other optical disk storage, magnetic cassettes, magnetic tape, magnetic disk storage or other magnetic storage devices or other tangible and/or non-transitory media which can be used to store desired information. In this regard, the terms "tangible" or "non-transitory" herein as applied to storage, memory or computer-readable media, are to be understood to exclude only propagating transitory signals per se as modifiers and do not relinquish rights to all standard storage, memory or computer-readable media that are not only propagating transitory signals per se.

Computer-readable storage media can be accessed by one or more local or remote computing devices, e.g., via access requests, queries or other data retrieval protocols, for a variety of operations with respect to the information stored by the medium.

Communications media typically embody computer-readable instructions, data structures, program modules or other structured or unstructured data in a data signal such as a modulated data signal, e.g., a carrier wave or other transport mechanism, and comprises any information delivery or transport media. The term "modulated data signal" or signals refers to a signal that has one or more of its characteristics set or changed in such a manner as to encode information in one or more signals. By way of example, and not limitation, communication media comprise wired media, such as a wired network or direct-wired connection, and wireless media such as acoustic, RF, infrared and other wireless media.

With reference again to FIG. **21**, the example environment **2100** for transmitting and receiving signals via or forming at least part of a base station (e.g., base station devices **1504**, macrocell site **1502**, or base stations **1614**) or central office (e.g., central office **1501** or **1611**). At least a portion of the example environment **2100** can also be used for transmission devices **101** or **102**. The example environment can comprise a computer **2102**, the computer **2102** comprising a processing unit **2104**, a system memory **2106** and a system bus **2108**. The system bus **2108** couples system components including, but not limited to, the system memory **2106** to the processing unit **2104**. The processing unit **2104** can be any of various commercially available processors. Dual microprocessors and other multiprocessor architectures can also be employed as the processing unit **2104**.

The system bus **2108** can be any of several types of bus structure that can further interconnect to a memory bus (with or without a memory controller), a peripheral bus, and a local bus using any of a variety of commercially available bus architectures. The system memory **2106** comprises ROM **2110** and RAM **2112**. A basic input/output system (BIOS) can be stored in a non-volatile memory such as ROM, erasable programmable read only memory (EPROM), EEPROM, which BIOS contains the basic routines that help to transfer information between elements within the computer **2102**, such as during startup. The RAM **2112** can also comprise a high-speed RAM such as static RAM for caching data.

The computer **2102** further comprises an internal hard disk drive (HDD) **2114** (e.g., EIDE, SATA), which internal hard disk drive **2114** can also be configured for external use in a suitable chassis (not shown), a magnetic floppy disk drive (FDD) **2116**, (e.g., to read from or write to a removable diskette **2118**) and an optical disk drive **2120**, (e.g., reading a CD-ROM disk **2122** or, to read from or write to other high

capacity optical media such as the DVD). The hard disk drive **2114**, magnetic disk drive **2116** and optical disk drive **2120** can be connected to the system bus **2108** by a hard disk drive interface **2124**, a magnetic disk drive interface **2126** and an optical drive interface **2128**, respectively. The interface **2124** for external drive implementations comprises at least one or both of Universal Serial Bus (USB) and Institute of Electrical and Electronics Engineers (IEEE) 1394 interface technologies. Other external drive connection technologies are within contemplation of the embodiments described herein.

The drives and their associated computer-readable storage media provide nonvolatile storage of data, data structures, computer-executable instructions, and so forth. For the computer **2102**, the drives and storage media accommodate the storage of any data in a suitable digital format. Although the description of computer-readable storage media above refers to a hard disk drive (HDD), a removable magnetic diskette, and a removable optical media such as a CD or DVD, it should be appreciated by those skilled in the art that other types of storage media which are readable by a computer, such as zip drives, magnetic cassettes, flash memory cards, cartridges, and the like, can also be used in the example operating environment, and further, that any such storage media can contain computer-executable instructions for performing the methods described herein.

A number of program modules can be stored in the drives and RAM **2112**, comprising an operating system **2130**, one or more application programs **2132**, other program modules **2134** and program data **2136**. All or portions of the operating system, applications, modules, and/or data can also be cached in the RAM **2112**. The systems and methods described herein can be implemented utilizing various commercially available operating systems or combinations of operating systems. Examples of application programs **2132** that can be implemented and otherwise executed by processing unit **2104** include the diversity selection determining performed by transmission device **101** or **102**.

A user can enter commands and information into the computer **2102** through one or more wired/wireless input devices, e.g., a keyboard **2138** and a pointing device, such as a mouse **2140**. Other input devices (not shown) can comprise a microphone, an infrared (IR) remote control, a joystick, a game pad, a stylus pen, touch screen or the like. These and other input devices are often connected to the processing unit **2104** through an input device interface **2142** that can be coupled to the system bus **2108**, but can be connected by other interfaces, such as a parallel port, an IEEE 1394 serial port, a game port, a universal serial bus (USB) port, an IR interface, etc.

A monitor **2144** or other type of display device can be also connected to the system bus **2108** via an interface, such as a video adapter **2146**. It will also be appreciated that in alternative embodiments, a monitor **2144** can also be any display device (e.g., another computer having a display, a smart phone, a tablet computer, etc.) for receiving display information associated with computer **2102** via any communication means, including via the Internet and cloud-based networks. In addition to the monitor **2144**, a computer typically comprises other peripheral output devices (not shown), such as speakers, printers, etc.

The computer **2102** can operate in a networked environment using logical connections via wired and/or wireless communications to one or more remote computers, such as a remote computer(s) **2148**. The remote computer(s) **2148** can be a workstation, a server computer, a router, a personal computer, portable computer, microprocessor-based entertainment appliance, a peer device or other common network node, and typically comprises many or all of the elements described relative to the computer **2102**, although, for purposes of brevity, only a memory/storage device **2150** is illustrated. The logical connections depicted comprise wired/wireless connectivity to a local area network (LAN) **2152** and/or larger networks, e.g., a wide area network (WAN) **2154**. Such LAN and WAN networking environments are commonplace in offices and companies, and facilitate enterprise-wide computer networks, such as intranets, all of which can connect to a global communications network, e.g., the Internet.

When used in a LAN networking environment, the computer **2102** can be connected to the local network **2152** through a wired and/or wireless communication network interface or adapter **2156**. The adapter **2156** can facilitate wired or wireless communication to the LAN **2152**, which can also comprise a wireless AP disposed thereon for communicating with the wireless adapter **2156**.

When used in a WAN networking environment, the computer **2102** can comprise a modem **2158** or can be connected to a communications server on the WAN **2154** or has other means for establishing communications over the WAN **2154**, such as by way of the Internet. The modem **2158**, which can be internal or external and a wired or wireless device, can be connected to the system bus **2108** via the input device interface **2142**. In a networked environment, program modules depicted relative to the computer **2102** or portions thereof, can be stored in the remote memory/storage device **2150**. It will be appreciated that the network connections shown are example and other means of establishing a communications link between the computers can be used.

The computer **2102** can be operable to communicate with any wireless devices or entities operatively disposed in wireless communication, e.g., a printer, scanner, desktop and/or portable computer, portable data assistant, communications satellite, any piece of equipment or location associated with a wirelessly detectable tag (e.g., a kiosk, news stand, restroom), and telephone. This can comprise Wireless Fidelity (Wi-Fi) and BLUETOOTH® wireless technologies. Thus, the communication can be a predefined structure as with a conventional network or simply an ad hoc communication between at least two devices.

Wi-Fi can allow connection to the Internet from a couch at home, a bed in a hotel room or a conference room at work, without wires. Wi-Fi is a wireless technology similar to that used in a cell phone that enables such devices, e.g., computers, to send and receive data indoors and out; anywhere within the range of a base station. Wi-Fi networks use radio technologies called IEEE 802.11 (a, b, g, n, ac, ag etc.) to provide secure, reliable, fast wireless connectivity. A Wi-Fi network can be used to connect computers to each other, to the Internet, and to wired networks (which can use IEEE 802.3 or Ethernet). Wi-Fi networks operate in the unlicensed 2.4 and 5 GHz radio bands for example or with products that contain both bands (dual band), so the networks can provide real-world performance similar to the basic 10BaseT wired Ethernet networks used in many offices.

FIG. **22** presents an example embodiment **2200** of a mobile network platform **2210** that can implement and exploit one or more aspects of the disclosed subject matter described herein. In one or more embodiments, the mobile network platform **2210** can generate and receive signals transmitted and received by base stations (e.g., base station devices **1504**, macrocell site **1502**, or base stations **1614**), central office (e.g., central office **1501** or **1611**), or trans-

mission device **101** or **102** associated with the disclosed subject matter. Generally, wireless network platform **2210** can comprise components, e.g., nodes, gateways, interfaces, servers, or disparate platforms, that facilitate both packet-switched (PS) (e.g., internet protocol (IP), frame relay, asynchronous transfer mode (ATM)) and circuit-switched (CS) traffic (e.g., voice and data), as well as control generation for networked wireless telecommunication. As a non-limiting example, wireless network platform **2210** can be included in telecommunications carrier networks, and can be considered carrier-side components as discussed elsewhere herein. Mobile network platform **2210** comprises CS gateway node(s) **2222** which can interface CS traffic received from legacy networks like telephony network(s) **2240** (e.g., public switched telephone network (PSTN), or public land mobile network (PLMN)) or a signaling system #7 (SS7) network **2270**. Circuit switched gateway node(s) **2222** can authorize and authenticate traffic (e.g., voice) arising from such networks. Additionally, CS gateway node(s) **2222** can access mobility, or roaming, data generated through SS7 network **2270**; for instance, mobility data stored in a visited location register (VLR), which can reside in memory **2230**. Moreover, CS gateway node(s) **2222** interfaces CS-based traffic and signaling and PS gateway node(s) **2218**. As an example, in a 3GPP UMTS network, CS gateway node(s) **2222** can be realized at least in part in gateway GPRS support node(s) (GGSN). It should be appreciated that functionality and specific operation of CS gateway node(s) **2222**, PS gateway node(s) **2218**, and serving node(s) **2216**, is provided and dictated by radio technology(ies) utilized by mobile network platform **2210** for telecommunication.

In addition to receiving and processing CS-switched traffic and signaling, PS gateway node(s) **2218** can authorize and authenticate PS-based data sessions with served mobile devices. Data sessions can comprise traffic, or content(s), exchanged with networks external to the wireless network platform **2210**, like wide area network(s) (WANs) **2250**, enterprise network(s) **2270**, and service network(s) **2280**, which can be embodied in local area network(s) (LANs), can also be interfaced with mobile network platform **2210** through PS gateway node(s) **2218**. It is to be noted that WANs **2250** and enterprise network(s) **2260** can embody, at least in part, a service network(s) like IP multimedia subsystem (IMS). Based on radio technology layer(s) available in technology resource(s) **2217**, packet-switched gateway node(s) **2218** can generate packet data protocol contexts when a data session is established; other data structures that facilitate routing of packetized data also can be generated. To that end, in an aspect, PS gateway node(s) **2218** can comprise a tunnel interface (e.g., tunnel termination gateway (TTG) in 3GPP UMTS network(s) (not shown)) which can facilitate packetized communication with disparate wireless network(s), such as Wi-Fi networks.

In embodiment **2200**, wireless network platform **2210** also comprises serving node(s) **2216** that, based upon available radio technology layer(s) within technology resource(s) **2217**, convey the various packetized flows of data streams received through PS gateway node(s) **2218**. It is to be noted that for technology resource(s) **2217** that rely primarily on CS communication, server node(s) can deliver traffic without reliance on PS gateway node(s) **2218**; for example, server node(s) can embody at least in part a mobile switching center. As an example, in a 3GPP UMTS network, serving node(s) **2216** can be embodied in serving GPRS support node(s) (SGSN).

For radio technologies that exploit packetized communication, server(s) **2214** in wireless network platform **2210** can execute numerous applications that can generate multiple disparate packetized data streams or flows, and manage (e.g., schedule, queue, format . . .) such flows. Such application(s) can comprise add-on features to standard services (for example, provisioning, billing, customer support . . .) provided by wireless network platform **2210**. Data streams (e.g., content(s) that are part of a voice call or data session) can be conveyed to PS gateway node(s) **2218** for authorization/authentication and initiation of a data session, and to serving node(s) **2216** for communication thereafter. In addition to application server, server(s) **2214** can comprise utility server(s), a utility server can comprise a provisioning server, an operations and maintenance server, a security server that can implement at least in part a certificate authority and firewalls as well as other security mechanisms, and the like. In an aspect, security server(s) secure communication served through wireless network platform **2210** to ensure network's operation and data integrity in addition to authorization and authentication procedures that CS gateway node(s) **2222** and PS gateway node(s) **2218** can enact. Moreover, provisioning server(s) can provision services from external network(s) like networks operated by a disparate service provider; for instance, WAN **2250** or Global Positioning System (GPS) network(s) (not shown). Provisioning server(s) can also provision coverage through networks associated to wireless network platform **2210** (e.g., deployed and operated by the same service provider), such as the distributed antennas networks shown in FIG. **1**(*s*) that enhance wireless service coverage by providing more network coverage. Repeater devices such as those shown in FIGS. **7**, **8**, and **9** also improve network coverage in order to enhance subscriber service experience by way of UE **2275**.

It is to be noted that server(s) **2214** can comprise one or more processors configured to confer at least in part the functionality of macro network platform **2210**. To that end, the one or more processor can execute code instructions stored in memory **2230**, for example. It is should be appreciated that server(s) **2214** can comprise a content manager **2215**, which operates in substantially the same manner as described hereinbefore.

In example embodiment **2200**, memory **2230** can store information related to operation of wireless network platform **2210**. Other operational information can comprise provisioning information of mobile devices served through wireless platform network **2210**, subscriber databases; application intelligence, pricing schemes, e.g., promotional rates, flat-rate programs, couponing campaigns; technical specification(s) consistent with telecommunication protocols for operation of disparate radio, or wireless, technology layers; and so forth. Memory **2230** can also store information from at least one of telephony network(s) **2240**, WAN **2250**, enterprise network(s) **2270**, or SS7 network **2260**. In an aspect, memory **2230** can be, for example, accessed as part of a data store component or as a remotely connected memory store.

In order to provide a context for the various aspects of the disclosed subject matter, FIG. **22**, and the following discussion, are intended to provide a brief, general description of a suitable environment in which the various aspects of the disclosed subject matter can be implemented. While the subject matter has been described above in the general context of computer-executable instructions of a computer program that runs on a computer and/or computers, those skilled in the art will recognize that the disclosed subject matter also can be implemented in combination with other

program modules. Generally, program modules comprise routines, programs, components, data structures, etc. that perform particular tasks and/or implement particular abstract data types.

FIG. **23** depicts an illustrative embodiment of a communication device **2300**. The communication device **2300** can serve as an illustrative embodiment of devices such as mobile devices and in-building devices referred to by the subject disclosure (e.g., in FIGS. **15**, **16**A-**16**C).

The communication device **2300** can comprise a wireline and/or wireless transceiver **2302** (herein transceiver **2302**), a user interface (UI) **2304**, a power supply **2314**, a location receiver **2316**, a motion sensor **2318**, an orientation sensor **2320**, and a controller **2306** for managing operations thereof. The transceiver **2302** can support short-range or long-range wireless access technologies such as Bluetooth®, ZigBee®, WiFi, DECT, or cellular communication technologies, just to mention a few (Bluetooth® and ZigBee® are trademarks registered by the Bluetooth® Special Interest Group and the ZigBee® Alliance, respectively). Cellular technologies can include, for example, CDMA-1×, UMTS/HSDPA, GSM/GPRS, TDMA/EDGE, EV/DO, WiMAX, SDR, LTE, as well as other next generation wireless communication technologies as they arise. The transceiver **2302** can also be adapted to support circuit-switched wireline access technologies (such as PSTN), packet-switched wireline access technologies (such as TCP/IP, VoIP, etc.), and combinations thereof.

The UI **2304** can include a depressible or touch-sensitive keypad **2308** with a navigation mechanism such as a roller ball, a joystick, a mouse, or a navigation disk for manipulating operations of the communication device **2300**. The keypad **2308** can be an integral part of a housing assembly of the communication device **2300** or an independent device operably coupled thereto by a tethered wireline interface (such as a USB cable) or a wireless interface supporting for example Bluetooth®. The keypad **2308** can represent a numeric keypad commonly used by phones, and/or a QWERTY keypad with alphanumeric keys. The UI **2304** can further include a display **2310** such as monochrome or color LCD (Liquid Crystal Display), OLED (Organic Light Emitting Diode) or other suitable display technology for conveying images to an end user of the communication device **2300**. In an embodiment where the display **2310** is touch-sensitive, a portion or all of the keypad **2308** can be presented by way of the display **2310** with navigation features.

The display **2310** can use touch screen technology to also serve as a user interface for detecting user input. As a touch screen display, the communication device **2300** can be adapted to present a user interface having graphical user interface (GUI) elements that can be selected by a user with a touch of a finger. The touch screen display **2310** can be equipped with capacitive, resistive or other forms of sensing technology to detect how much surface area of a user's finger has been placed on a portion of the touch screen display. This sensing information can be used to control the manipulation of the GUI elements or other functions of the user interface. The display **2310** can be an integral part of the housing assembly of the communication device **2300** or an independent device communicatively coupled thereto by a tethered wireline interface (such as a cable) or a wireless interface.

The UI **2304** can also include an audio system **2312** that utilizes audio technology for conveying low volume audio (such as audio heard in proximity of a human ear) and high volume audio (such as speakerphone for hands free operation). The audio system **2312** can further include a microphone for receiving audible signals of an end user. The audio system **2312** can also be used for voice recognition applications. The UI **2304** can further include an image sensor **2313** such as a charged coupled device (CCD) camera for capturing still or moving images.

The power supply **2314** can utilize common power management technologies such as replaceable and rechargeable batteries, supply regulation technologies, and/or charging system technologies for supplying energy to the components of the communication device **2300** to facilitate long-range or short-range portable communications. Alternatively, or in combination, the charging system can utilize external power sources such as DC power supplied over a physical interface such as a USB port or other suitable tethering technologies.

The location receiver **2316** can utilize location technology such as a global positioning system (GPS) receiver capable of assisted GPS for identifying a location of the communication device **2300** based on signals generated by a constellation of GPS satellites, which can be used for facilitating location services such as navigation. The motion sensor **2318** can utilize motion sensing technology such as an accelerometer, a gyroscope, or other suitable motion sensing technology to detect motion of the communication device **2300** in three-dimensional space. The orientation sensor **2320** can utilize orientation sensing technology such as a magnetometer to detect the orientation of the communication device **2300** (north, south, west, and east, as well as combined orientations in degrees, minutes, or other suitable orientation metrics).

The communication device **2300** can use the transceiver **2302** to also determine a proximity to a cellular, WiFi, Bluetooth®, or other wireless access points by sensing techniques such as utilizing a received signal strength indicator (RSSI) and/or signal time of arrival (TOA) or time of flight (TOF) measurements. The controller **2306** can utilize computing technologies such as a microprocessor, a digital signal processor (DSP), programmable gate arrays, application specific integrated circuits, and/or a video processor with associated storage memory such as Flash, ROM, RAM, SRAM, DRAM or other storage technologies for executing computer instructions, controlling, and processing data supplied by the aforementioned components of the communication device **2300**.

Other components not shown in FIG. **23** can be used in one or more embodiments of the subject disclosure. For instance, the communication device **2300** can include a slot for adding or removing an identity module such as a Subscriber Identity Module (SIM) card or Universal Integrated Circuit Card (UICC). SIM or UICC cards can be used for identifying subscriber services, executing programs, storing subscriber data, and so on.

In the subject specification, terms such as "store," "storage," "data store," data storage," "database," and substantially any other information storage component relevant to operation and functionality of a component, refer to "memory components," or entities embodied in a "memory" or components comprising the memory. It will be appreciated that the memory components described herein can be either volatile memory or nonvolatile memory, or can comprise both volatile and nonvolatile memory, by way of illustration, and not limitation, volatile memory, non-volatile memory, disk storage, and memory storage. Further, nonvolatile memory can be included in read only memory (ROM), programmable ROM (PROM), electrically programmable ROM (EPROM), electrically erasable ROM (EEPROM), or flash memory. Volatile memory can com-

prise random access memory (RAM), which acts as external cache memory. By way of illustration and not limitation, RAM is available in many forms such as synchronous RAM (SRAM), dynamic RAM (DRAM), synchronous DRAM (SDRAM), double data rate SDRAM (DDR SDRAM), enhanced SDRAM (ESDRAM), Synchlink DRAM (SLDRAM), and direct Rambus RAM (DRRAM). Additionally, the disclosed memory components of systems or methods herein are intended to comprise, without being limited to comprising, these and any other suitable types of memory.

Moreover, it will be noted that the disclosed subject matter can be practiced with other computer system configurations, comprising single-processor or multiprocessor computer systems, mini-computing devices, mainframe computers, as well as personal computers, hand-held computing devices (e.g., PDA, phone, smartphone, watch, tablet computers, netbook computers, etc.), microprocessor-based or programmable consumer or industrial electronics, and the like. The illustrated aspects can also be practiced in distributed computing environments where tasks are performed by remote processing devices that are linked through a communications network; however, some if not all aspects of the subject disclosure can be practiced on stand-alone computers. In a distributed computing environment, program modules can be located in both local and remote memory storage devices.

Some of the embodiments described herein can also employ artificial intelligence (AI) to facilitate automating one or more features described herein. For example, artificial intelligence can be used in optional training controller **230** evaluate and select candidate frequencies, modulation schemes, MIMO modes, and/or guided wave modes in order to maximize transfer efficiency. The embodiments (e.g., in connection with automatically identifying acquired cell sites that provide a maximum value/benefit after addition to an existing communication network) can employ various AI-based schemes for carrying out various embodiments thereof. Moreover, the classifier can be employed to determine a ranking or priority of the each cell site of the acquired network. A classifier is a function that maps an input attribute vector, x=(x1, x2, x3, x4, . . . , xn), to a confidence that the input belongs to a class, that is, f(x)=confidence (class). Such classification can employ a probabilistic and/or statistical-based analysis (e.g., factoring into the analysis utilities and costs) to prognose or infer an action that a user desires to be automatically performed. A support vector machine (SVM) is an example of a classifier that can be employed. The SVM operates by finding a hypersurface in the space of possible inputs, which the hypersurface attempts to split the triggering criteria from the non-triggering events. Intuitively, this makes the classification correct for testing data that is near, but not identical to training data. Other directed and undirected model classification approaches comprise, e.g., naïve Bayes, Bayesian networks, decision trees, neural networks, fuzzy logic models, and probabilistic classification models providing different patterns of independence can be employed. Classification as used herein also is inclusive of statistical regression that is utilized to develop models of priority.

As will be readily appreciated, one or more of the embodiments can employ classifiers that are explicitly trained (e.g., via a generic training data) as well as implicitly trained (e.g., via observing UE behavior, operator preferences, historical information, receiving extrinsic information). For example, SVMs can be configured via a learning or training phase within a classifier constructor and feature selection module. Thus, the classifier(s) can be used to automatically learn and perform a number of functions, including but not limited to determining according to a predetermined criteria which of the acquired cell sites will benefit a maximum number of subscribers and/or which of the acquired cell sites will add minimum value to the existing communication network coverage, etc.

As used in some contexts in this application, in some embodiments, the terms "component," "system" and the like are intended to refer to, or comprise, a computer-related entity or an entity related to an operational apparatus with one or more specific functionalities, wherein the entity can be either hardware, a combination of hardware and software, software, or software in execution. As an example, a component may be, but is not limited to being, a process running on a processor, a processor, an object, an executable, a thread of execution, computer-executable instructions, a program, and/or a computer. By way of illustration and not limitation, both an application running on a server and the server can be a component. One or more components may reside within a process and/or thread of execution and a component may be localized on one computer and/or distributed between two or more computers. In addition, these components can execute from various computer readable media having various data structures stored thereon. The components may communicate via local and/or remote processes such as in accordance with a signal having one or more data packets (e.g., data from one component interacting with another component in a local system, distributed system, and/or across a network such as the Internet with other systems via the signal). As another example, a component can be an apparatus with specific functionality provided by mechanical parts operated by electric or electronic circuitry, which is operated by a software or firmware application executed by a processor, wherein the processor can be internal or external to the apparatus and executes at least a part of the software or firmware application. As yet another example, a component can be an apparatus that provides specific functionality through electronic components without mechanical parts, the electronic components can comprise a processor therein to execute software or firmware that confers at least in part the functionality of the electronic components. While various components have been illustrated as separate components, it will be appreciated that multiple components can be implemented as a single component, or a single component can be implemented as multiple components, without departing from example embodiments.

Further, the various embodiments can be implemented as a method, apparatus or article of manufacture using standard programming and/or engineering techniques to produce software, firmware, hardware or any combination thereof to control a computer to implement the disclosed subject matter. The term "article of manufacture" as used herein is intended to encompass a computer program accessible from any computer-readable device or computer-readable storage/communications media. For example, computer readable storage media can include, but are not limited to, magnetic storage devices (e.g., hard disk, floppy disk, magnetic strips), optical disks (e.g., compact disk (CD), digital versatile disk (DVD)), smart cards, and flash memory devices (e.g., card, stick, key drive). Of course, those skilled in the art will recognize many modifications can be made to this configuration without departing from the scope or spirit of the various embodiments.

In addition, the words "example" and "exemplary" are used herein to mean serving as an instance or illustration.

Any embodiment or design described herein as "example" or "exemplary" is not necessarily to be construed as preferred or advantageous over other embodiments or designs. Rather, use of the word example or exemplary is intended to present concepts in a concrete fashion. As used in this application, the term "or" is intended to mean an inclusive "or" rather than an exclusive "or". That is, unless specified otherwise or clear from context, "X employs A or B" is intended to mean any of the natural inclusive permutations. That is, if X employs A; X employs B; or X employs both A and B, then "X employs A or B" is satisfied under any of the foregoing instances. In addition, the articles "a" and "an" as used in this application and the appended claims should generally be construed to mean "one or more" unless specified otherwise or clear from context to be directed to a singular form.

Moreover, terms such as "user equipment," "mobile station," "mobile," subscriber station," "access terminal," "terminal," "handset," "mobile device" (and/or terms representing similar terminology) can refer to a wireless device utilized by a subscriber or user of a wireless communication service to receive or convey data, control, voice, video, sound, gaming or substantially any data-stream or signaling-stream. The foregoing terms are utilized interchangeably herein and with reference to the related drawings.

Furthermore, the terms "user," "subscriber," "customer," "consumer" and the like are employed interchangeably throughout, unless context warrants particular distinctions among the terms. It should be appreciated that such terms can refer to human entities or automated components supported through artificial intelligence (e.g., a capacity to make inference based, at least, on complex mathematical formalisms), which can provide simulated vision, sound recognition and so forth.

As employed herein, the term "processor" can refer to substantially any computing processing unit or device comprising, but not limited to comprising, single-core processors; single-processors with software multithread execution capability; multi-core processors; multi-core processors with software multithread execution capability; multi-core processors with hardware multithread technology; parallel platforms; and parallel platforms with distributed shared memory. Additionally, a processor can refer to an integrated circuit, an application specific integrated circuit (ASIC), a digital signal processor (DSP), a field programmable gate array (FPGA), a programmable logic controller (PLC), a complex programmable logic device (CPLD), a discrete gate or transistor logic, discrete hardware components or any combination thereof designed to perform the functions described herein. Processors can exploit nano-scale architectures such as, but not limited to, molecular and quantum-dot based transistors, switches and gates, in order to optimize space usage or enhance performance of user equipment. A processor can also be implemented as a combination of computing processing units.

As used herein, terms such as "data storage," data storage," "database," and substantially any other information storage component relevant to operation and functionality of a component, refer to "memory components," or entities embodied in a "memory" or components comprising the memory. It will be appreciated that the memory components or computer-readable storage media, described herein can be either volatile memory or nonvolatile memory or can include both volatile and nonvolatile memory.

What has been described above includes mere examples of various embodiments. It is, of course, not possible to describe every conceivable combination of components or methodologies for purposes of describing these examples, but one of ordinary skill in the art can recognize that many further combinations and permutations of the present embodiments are possible. Accordingly, the embodiments disclosed and/or claimed herein are intended to embrace all such alterations, modifications and variations that fall within the spirit and scope of the appended claims. Furthermore, to the extent that the term "includes" is used in either the detailed description or the claims, such term is intended to be inclusive in a manner similar to the term "comprising" as "comprising" is interpreted when employed as a transitional word in a claim.

In addition, a flow diagram may include a "start" and/or "continue" indication. The "start" and "continue" indications reflect that the steps presented can optionally be incorporated in or otherwise used in conjunction with other routines. In this context, "start" indicates the beginning of the first step presented and may be preceded by other activities not specifically shown. Further, the "continue" indication reflects that the steps presented may be performed multiple times and/or may be succeeded by other activities not specifically shown. Further, while a flow diagram indicates a particular ordering of steps, other orderings are likewise possible provided that the principles of causality are maintained.

As may also be used herein, the term(s) "operably coupled to", "coupled to", and/or "coupling" includes direct coupling between items and/or indirect coupling between items via one or more intervening items. Such items and intervening items include, but are not limited to, junctions, communication paths, components, circuit elements, circuits, functional blocks, and/or devices. As an example of indirect coupling, a signal conveyed from a first item to a second item may be modified by one or more intervening items by modifying the form, nature or format of information in a signal, while one or more elements of the information in the signal are nevertheless conveyed in a manner than can be recognized by the second item. In a further example of indirect coupling, an action in a first item can cause a reaction on the second item, as a result of actions and/or reactions in one or more intervening items.

Although specific embodiments have been illustrated and described herein, it should be appreciated that any arrangement which achieves the same or similar purpose may be substituted for the embodiments described or shown by the subject disclosure. The subject disclosure is intended to cover any and all adaptations or variations of various embodiments. Combinations of the above embodiments, and other embodiments not specifically described herein, can be used in the subject disclosure. For instance, one or more features from one or more embodiments can be combined with one or more features of one or more other embodiments. In one or more embodiments, features that are positively recited can also be negatively recited and excluded from the embodiment with or without replacement by another structural and/or functional feature. The steps or functions described with respect to the embodiments of the subject disclosure can be performed in any order. The steps or functions described with respect to the embodiments of the subject disclosure can be performed alone or in combination with other steps or functions of the subject disclosure, as well as from other embodiments or from other steps that have not been described in the subject disclosure. Further, more than or less than all of the features described with respect to an embodiment can also be utilized.

What is claimed is:

1. A method, comprising:

receiving, by each transceiver of a plurality of transceivers, one of a plurality of communication signals, each of the plurality of communication signals including different data; and

generating, by each transceiver of the plurality of transceivers, one of a plurality of electromagnetic waves, each electromagnetic wave of the plurality of electromagnetic waves guided by a respective one of a plurality of twin-lead transmission lines utilizing a shared transmission line, and each electromagnetic wave of the plurality of electromagnetic waves conveying a different one of the plurality of communication signals.

2. The method of claim 1, wherein a plurality of spacers is coupled to the plurality of twin-lead transmission lines at different locations.

3. The method of claim 2, wherein each spacer of the plurality of spacers maintains a uniform spacing between the plurality of twin-lead transmission lines.

4. The method of claim 2, wherein the plurality of twin-lead transmission lines is formed from a plurality of cables, and wherein a different one of the plurality of cables forms a twin-lead cable for propagating one of the plurality of electromagnetic waves.

5. The method of claim 4, wherein the twin-lead cable comprises one of the plurality of twin-lead transmission lines.

6. The method of claim 1, wherein at least one of the plurality of twin-lead transmission lines comprises an insulated conductor.

7. The method of claim 1, wherein at least one of the plurality of electromagnetic waves guided by the respective one of the plurality of twin-lead transmission lines and the shared transmission line is directed to a receiver coupled to the respective one of the plurality of twin-lead transmission lines.

8. A method, comprising:

receiving, by each of a plurality of receivers, one of a plurality of electromagnetic waves, each electromagnetic wave of the plurality of electromagnetic waves guided by a different one of a plurality of twin-lead transmission lines sharing a common line, and each electromagnetic wave of the plurality of electromagnetic waves conveying a different one of a plurality of communication signals; and

obtaining, by each of the plurality of receivers, the different one of the plurality of communication signals.

9. The method of claim 8, further comprising coupling a plurality of spacers to the plurality of twin-lead transmission lines at different locations.

10. The method of claim 9, wherein each spacer of the plurality of spacers maintains a uniform spacing between the plurality of twin-lead transmission lines.

11. The method of claim 9, wherein the different one of the plurality of twin-lead transmission lines and the common line form a twin-lead cable for propagating one of the plurality of electromagnetic waves.

12. The method of claim 8, wherein at least one of the plurality of twin-lead transmission lines comprises a power line.

13. The method of claim 12, wherein the power line comprises an insulated conductor.

14. The method of claim 8, wherein one of the plurality of electromagnetic waves guided by the different one of the plurality of twin-lead transmission lines sharing the common line is generated by a launcher coupled to the different one of the plurality of twin-lead transmission lines.

15. A device, comprising:

means for facilitating separation of a plurality of transmission lines; and

means for facilitating transmission of one of a first plurality of electromagnetic waves, each electromagnetic wave of the first plurality of electromagnetic waves guided by a different one of a plurality of twin-lead transmission lines formed between different ones of the plurality of transmission lines sharing a common transmission line.

16. The device of claim 15, wherein the means for facilitating separation of the plurality of transmission lines is positioned at different locations of the plurality of transmission lines.

17. The device of claim 16, wherein the means for facilitating separation of the plurality of transmission lines maintains a uniform spacing between the plurality of transmission lines and the common transmission line to form the plurality of twin-lead transmission lines.

18. The device of claim 15, wherein each transmission line of the plurality of transmission lines comprises an insulated conductor.

19. The device of claim 15, wherein the one of the first plurality of electromagnetic waves guided by the different one of the plurality of transmission lines and the common transmission line is directed to a receiver coupled to the different one of the plurality of transmission lines and the common transmission line.

20. The device of claim 15, further comprising means for facilitating reception of a second plurality of electromagnetic waves, each of the second plurality of electromagnetic waves guided by the different one of the plurality of twin-lead transmission lines.

* * * * *