US009893554B2

(12) United States Patent
Bell et al.

(10) Patent No.: US 9,893,554 B2
(45) Date of Patent: Feb. 13, 2018

(54) **SYSTEM AND METHOD FOR PROVIDING HEALTH SAFETY IN A WIRELESS POWER TRANSMISSION SYSTEM**

(71) Applicant: **ENERGOUS CORPORATION**, San Jose, CA (US)

(72) Inventors: **Douglas Bell**, Pleasanton, CA (US); **Michael A. Leabman**, San Ramon, CA (US)

(73) Assignee: **Energous Corporation**, San Jose, CA (US)

(*) Notice: Subject to any disclaimer, the term of this patent is extended or adjusted under 35 U.S.C. 154(b) by 363 days.

(21) Appl. No.: **14/584,412**

(22) Filed: **Dec. 29, 2014**

(65) **Prior Publication Data**

US 2016/0099613 A1 Apr. 7, 2016

Related U.S. Application Data

(63) Continuation-in-part of application No. 14/330,939, filed on Jul. 14, 2014.

(51) **Int. Cl.**
H02J 17/00 (2006.01)
H02J 7/02 (2016.01)
(Continued)

(52) **U.S. Cl.**
CPC ***H02J 7/025*** (2013.01); ***H02J 50/23*** (2016.02); ***H02J 50/40*** (2016.02); ***H02J 50/80*** (2016.02); ***H02J 50/90*** (2016.02); ***H04B 1/3838*** (2013.01)

(58) **Field of Classification Search**
CPC H02J 50/20; H02J 50/23
See application file for complete search history.

(56) **References Cited**

U.S. PATENT DOCUMENTS

787,412 A 4/1905 Tesla
3,434,678 A 3/1969 Brown et al.
(Continued)

FOREIGN PATENT DOCUMENTS

CN 203826555 U 9/2014
CN 104090265 A 10/2014
(Continued)

OTHER PUBLICATIONS

International Search Report and Written Opinion of the International Searching Authority dated Mar. 3, 2016 in International Application No. PCT/US15/67275, 33 pages.
(Continued)

Primary Examiner — Daniel Cavallari
(74) *Attorney, Agent, or Firm* — Morgan, Lewis & Bockius LLP

(57) **ABSTRACT**

The embodiments described herein include a transmitter that transmits a power transmission signal (e.g., radio frequency (RF) signal waves) to create a three-dimensional pocket of energy. At least one receiver can be connected to or integrated into electronic devices and receive power from the pocket of energy. The transmitter can locate the at least one receiver in a three-dimensional space using a communication medium (e.g., Bluetooth technology). The transmitter generates a waveform to create a pocket of energy around each of the at least one receiver. The transmitter uses an algorithm to direct, focus, and control the waveform in three dimensions. The receiver can convert the transmission signals (e.g., RF signals) into electricity for powering an electronic device. Accordingly, the embodiments for wireless power transmission can allow powering and charging a plurality of electrical devices without wires.

13 Claims, 65 Drawing Sheets

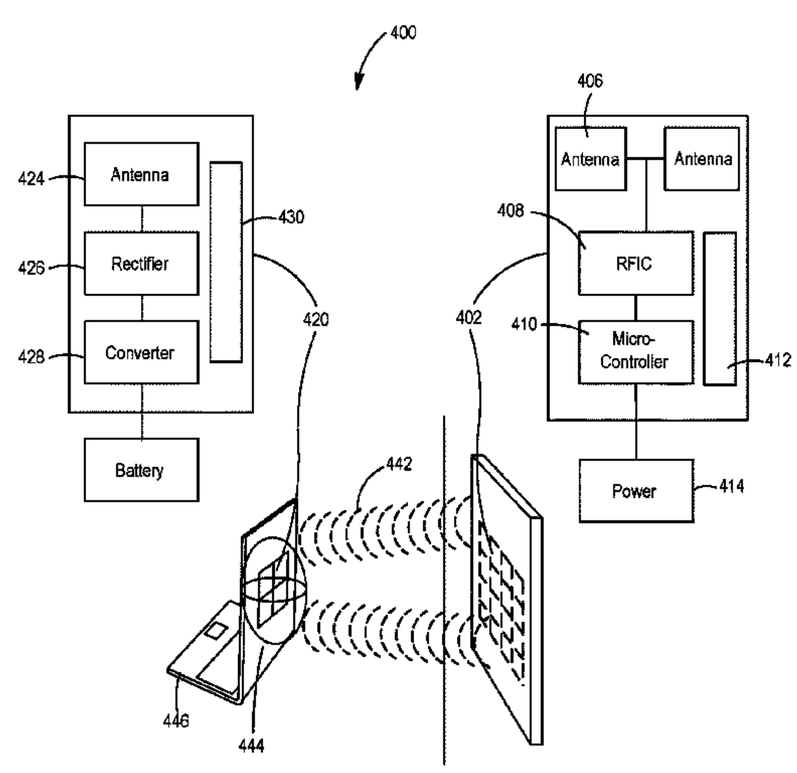

(51) **Int. Cl.**

H04B 1/3827	(2015.01)
H02J 50/90	(2016.01)
H02J 50/80	(2016.01)
H02J 50/23	(2016.01)
H02J 50/40	(2016.01)

(56) **References Cited**

U.S. PATENT DOCUMENTS

3,696,384	A	10/1972	Lester
3,754,269	A	8/1973	Clavin
4,101,895	A	7/1978	Jones, Jr.
4,360,741	A	11/1982	Fitzsimmons et al.
4,944,036	A	7/1990	Hyatt
4,995,010	A	2/1991	Knight
5,200,759	A	4/1993	McGinnis
5,211,471	A	5/1993	Rohrs
5,548,292	A	8/1996	Hirshfield et al.
5,556,749	A	9/1996	Mitsuhashi et al.
5,568,088	A	10/1996	Dent et al.
5,646,633	A	7/1997	Dahlberg
5,697,063	A	12/1997	Kishigami et al.
5,712,642	A	1/1998	Hulderman
5,936,527	A	8/1999	Isaacman et al.
5,982,139	A	11/1999	Parise
6,046,708	A	4/2000	MacDonald, Jr. et al.
6,127,799	A	10/2000	Krishnan
6,127,942	A	10/2000	Welle
6,163,296	A	12/2000	Lier et al.
6,289,237	B1	9/2001	Mickle et al.
6,329,908	B1	12/2001	Frecska
6,421,235	B2	7/2002	Ditzik
6,437,685	B2	8/2002	Hanaki
6,456,253	B1	9/2002	Rummeli et al.
6,476,795	B1	11/2002	Derocher et al.
6,501,414	B2	12/2002	Amdt et al.
6,583,723	B2	6/2003	Watanabe et al.
6,597,897	B2	7/2003	Tang
6,615,074	B2	9/2003	Mickle et al.
6,664,920	B1	12/2003	Mott et al.
6,798,716	B1	9/2004	Charych
6,803,744	B1	10/2004	Sabo
6,856,291	B2	2/2005	Mickle et al.
6,911,945	B2	6/2005	Korva
6,960,968	B2	11/2005	Odendaal et al.
6,967,462	B1	11/2005	Landis
6,988,026	B2	1/2006	Breed et al.
7,003,350	B2	2/2006	Denker et al.
7,027,311	B2	4/2006	Vanderelli et al.
7,068,991	B2	6/2006	Parise
7,183,748	B1	2/2007	Unno et al.
7,191,013	B1	3/2007	Miranda et al.
7,196,663	B2	3/2007	Bolzer et al.
7,205,749	B2	4/2007	Hagen et al.
7,222,356	B1	5/2007	Yonezawa et al.
7,274,334	B2	9/2007	o'Riordan et al.
7,274,336	B2	9/2007	Carson
7,351,975	B2	4/2008	Brady et al.
7,359,730	B2	4/2008	Dennis et al.
7,392,068	B2	6/2008	Dayan
7,403,803	B2	7/2008	Mickle et al.
7,451,839	B2	11/2008	Perlman
7,463,201	B2	12/2008	Chiang et al.
7,614,556	B2	11/2009	Overhultz et al.
7,639,994	B2	12/2009	Greene et al.
7,643,312	B2	1/2010	Vanderelli et al.
7,652,577	B1	1/2010	Madhow et al.
7,702,771	B2	4/2010	Ewing et al.
7,786,419	B2	8/2010	Hyde et al.
7,812,771	B2	10/2010	Greene et al.
7,830,312	B2	11/2010	Choudhury et al.
7,844,306	B2	11/2010	Shearer et al.
7,868,482	B2	1/2011	Greene et al.
7,898,105	B2	3/2011	Greene et al.
7,904,117	B2	3/2011	Doan et al.
7,925,308	B2	4/2011	Greene et al.
8,055,003	B2	11/2011	Mittleman et al.
8,070,595	B2	12/2011	Alderucci et al.
8,072,380	B2	12/2011	Crouch
8,092,301	B2	1/2012	Alderucci et al.
8,099,140	B2	1/2012	Arai
8,115,448	B2	2/2012	John
8,159,090	B2	4/2012	Greene et al.
8,159,364	B2	4/2012	Zeine
8,180,286	B2	5/2012	Yamasuge
8,228,194	B2	7/2012	Mickle
8,264,101	B2	9/2012	Hyde et al.
8,264,291	B2	9/2012	Morita
8,276,325	B2	10/2012	Clifton et al.
8,278,784	B2	10/2012	Cook et al.
8,284,101	B2	10/2012	Fusco
8,310,201	B1	11/2012	Wright
8,362,745	B2	1/2013	Tinaphong
8,380,255	B2	2/2013	Shearer et al.
8,410,953	B2	4/2013	Zeine
8,411,963	B2	4/2013	Luff
8,432,062	B2	4/2013	Greene et al.
8,432,071	B2	4/2013	Huang et al.
8,446,248	B2	5/2013	Zeine
8,447,234	B2	5/2013	Cook et al.
8,451,189	B1	5/2013	Fluhler
8,452,235	B2	5/2013	Kirby et al.
8,457,656	B2	6/2013	Perkins et al.
8,461,817	B2	6/2013	Martin et al.
8,467,733	B2	6/2013	Leabman
8,497,658	B2	7/2013	Von Novak et al.
8,552,597	B2	8/2013	Song et al.
8,558,661	B2	10/2013	Zeine
8,560,026	B2	10/2013	Chanterac
8,604,746	B2	12/2013	Lee
8,614,643	B2	12/2013	Leabman
8,621,245	B2	12/2013	Shearer et al.
8,626,249	B2	1/2014	Kuusilinna et al.
8,629,576	B2	1/2014	Levine
8,653,966	B2	2/2014	Rao et al.
8,674,551	B2	3/2014	Low et al.
8,686,685	B2	4/2014	Moshfeghi
8,712,355	B2	4/2014	Black et al.
8,712,485	B2	4/2014	Tam
8,718,773	B2	5/2014	Wills et al.
8,729,737	B2	5/2014	Schatz et al.
8,736,228	B1	5/2014	Freed et al.
8,770,482	B2	7/2014	Ackermann et al.
8,772,960	B2	7/2014	Yoshida
8,823,319	B2	9/2014	Von Novak, III et al.
8,854,176	B2	10/2014	Zeine
8,860,364	B2	10/2014	Low et al.
8,897,770	B1	11/2014	Frolov et al.
8,923,189	B2	12/2014	Leabman
8,928,544	B2	1/2015	Massie et al.
8,937,408	B2	1/2015	Ganem et al.
8,946,940	B2	2/2015	Kim et al.
8,963,486	B2	2/2015	Kirby et al.
8,970,070	B2	3/2015	Sada et al.
8,989,053	B1	3/2015	Skaaksrud et al.
9,000,616	B2	4/2015	Greene et al.
9,001,622	B2	4/2015	Perry
9,006,934	B2	4/2015	Kozakai et al.
9,021,277	B2	4/2015	Shearer et al.
9,030,161	B2	5/2015	Lu et al.
9,059,598	B2	6/2015	Kang et al.
9,059,599	B2	6/2015	Won et al.
9,077,188	B2	7/2015	Moshfeghi
9,088,216	B2	7/2015	Garrity et al.
9,124,125	B2	9/2015	Leabman et al.
9,130,397	B2	9/2015	Leabman et al.
9,130,602	B2	9/2015	Cook
9,142,998	B2	9/2015	Yu et al.
9,143,000	B2	9/2015	Leabman et al.
9,143,010	B2	9/2015	Urano
9,178,389	B2	11/2015	Hwang
9,225,196	B2	12/2015	Huang et al.
9,242,411	B2	1/2016	Kritchman et al.
9,244,500	B2	1/2016	Cain et al.
9,252,628	B2	2/2016	Leabman et al.

(56) **References Cited**

U.S. PATENT DOCUMENTS

9,270,344	B2	2/2016	Rosenberg
9,282,582	B1	3/2016	Dunsbergen et al.
9,294,840	B1	3/2016	Anderson et al.
9,297,896	B1	3/2016	Andrews
9,318,898	B2	4/2016	John
9,368,020	B1	6/2016	Bell et al.
9,401,977	B1	7/2016	Gaw
9,444,283	B2	9/2016	Son et al.
9,450,449	B1	9/2016	Leabman et al.
9,461,502	B2	10/2016	Lee et al.
9,520,725	B2	12/2016	Masaoka et al.
9,520,748	B2	12/2016	Hyde et al.
9,522,270	B2	12/2016	Perryman et al.
9,537,354	B2	1/2017	Bell et al.
9,537,357	B2	1/2017	Leabman
9,537,358	B2	1/2017	Leabman
9,538,382	B2	1/2017	Bell et al.
9,544,640	B2	1/2017	Lau
9,559,553	B2	1/2017	Bae
9,564,773	B2	2/2017	Pogorelik et al.
9,571,974	B2	2/2017	Choi et al.
9,590,444	B2	3/2017	Walley
9,620,996	B2	4/2017	Zeine
2002/0001307	A1	1/2002	Nguyen et al.
2002/0028655	A1	3/2002	Rosener et al.
2002/0034958	A1	3/2002	Oberschmidt et al.
2002/0054330	A1	5/2002	Jinbo et al.
2002/0072784	A1	6/2002	Sheppard et al.
2002/0095980	A1	7/2002	Breed et al.
2002/0103447	A1	8/2002	Terry
2002/0133592	A1	9/2002	Matsuda
2002/0172223	A1	11/2002	Stilp
2003/0005759	A1	1/2003	Breed et al.
2003/0058187	A1	3/2003	Billiet et al.
2003/0076274	A1	4/2003	Phelan et al.
2003/0179152	A1	9/2003	Watada et al.
2003/0179573	A1	9/2003	Chun
2003/0192053	A1	10/2003	Sheppard et al.
2004/0019624	A1	1/2004	Sukegawa
2004/0020100	A1	2/2004	O'Brian et al.
2004/0036657	A1	2/2004	Forster et al.
2004/0066251	A1	4/2004	Eleftheriades et al.
2004/0113543	A1	6/2004	Daniels
2004/0119675	A1	6/2004	Washio et al.
2004/0107641	A1	7/2004	Walton et al.
2004/0130425	A1	7/2004	Dayan et al.
2004/0130442	A1	7/2004	Breed
2004/0142733	A1	7/2004	Parise
2004/0145342	A1	7/2004	Lyon
2004/0196190	A1	10/2004	Mendolia et al.
2004/0207559	A1	10/2004	Milosavljevic
2004/0218759	A1	11/2004	Yacobi
2004/0259604	A1	12/2004	Mickle et al.
2004/0263124	A1	12/2004	Wieck et al.
2005/0007276	A1	1/2005	Barrick et al.
2005/0030118	A1	2/2005	Wang
2005/0046584	A1	3/2005	Breed
2005/0055316	A1	3/2005	Williams
2005/0093766	A1	5/2005	Turner
2005/0116683	A1	6/2005	Cheng
2005/0117660	A1	6/2005	Vialle et al.
2005/0171411	A1	8/2005	KenKnight
2005/0198673	A1	9/2005	Kit et al.
2005/0227619	A1	10/2005	Lee et al.
2005/0232469	A1	10/2005	Schofield
2005/0282591	A1	12/2005	Shaff
2006/0013335	A1	1/2006	Leabman
2006/0019712	A1	1/2006	Choi
2006/0030279	A1	2/2006	Leabman et al.
2006/0092079	A1	5/2006	de Rochemont
2006/0094425	A1	5/2006	Mickle et al.
2006/0113955	A1	6/2006	Nunally
2006/0136004	A1	6/2006	Cowan et al.
2006/0160517	A1	7/2006	Yoon
2006/0183473	A1	8/2006	Ukon
2006/0190063	A1	8/2006	Kanzius
2006/0192913	A1	8/2006	Shutou et al.
2006/0199620	A1	9/2006	Greene et al.
2006/0238365	A1	10/2006	Vecchione et al.
2006/0266564	A1	11/2006	Perlman et al.
2006/0266917	A1	11/2006	Baldis et al.
2006/0278706	A1	12/2006	Hatakayama et al.
2006/0284593	A1	12/2006	Nagy et al.
2006/0287094	A1	12/2006	Mahaffey et al.
2007/0007821	A1	1/2007	Rossetti
2007/0019693	A1	1/2007	Graham
2007/0021140	A1	1/2007	Keyes
2007/0060185	A1	3/2007	Simon et al.
2007/0070490	A1	3/2007	Tsunoda et al.
2007/0093269	A1	4/2007	Leabman et al.
2007/0097653	A1	5/2007	Gilliland et al.
2007/0103110	A1	5/2007	Sagoo
2007/0106894	A1	5/2007	Zhang
2007/0109121	A1	5/2007	Cohen
2007/0139000	A1	6/2007	Kozuma
2007/0149162	A1	6/2007	Greene et al.
2007/0173196	A1	7/2007	Gallic
2007/0173214	A1	7/2007	Mickle et al.
2007/0178857	A1	8/2007	Greene et al.
2007/0178945	A1	8/2007	Cook et al.
2007/0182367	A1	8/2007	Partovi
2007/0191074	A1	8/2007	Harrist et al.
2007/0191075	A1	8/2007	Greene et al.
2007/0197281	A1	8/2007	Stronach
2007/0210960	A1	9/2007	Rofougaran et al.
2007/0222681	A1	9/2007	Greene et al.
2007/0257634	A1	11/2007	Leschin et al.
2007/0273486	A1	11/2007	Shiotsu
2007/0298846	A1	12/2007	Greene et al.
2008/0014897	A1	1/2008	Cook et al.
2008/0062062	A1	3/2008	Borau et al.
2008/0062255	A1	3/2008	Gal
2008/0067874	A1	3/2008	Tseng
2008/0074324	A1	3/2008	Puzella et al.
2008/0089277	A1	4/2008	Aledander et al.
2008/0113816	A1	5/2008	Mahaffey et al.
2008/0122297	A1	5/2008	Arai
2008/0123383	A1	5/2008	Shionoiri
2008/0129536	A1	6/2008	Randall et al.
2008/0169910	A1	7/2008	Greene et al.
2008/0197802	A1	8/2008	Onishi
2008/0204342	A1	8/2008	Kharadly
2008/0204350	A1	8/2008	Tam et al.
2008/0210762	A1	9/2008	Osada et al.
2008/0211458	A1	9/2008	Lawther et al.
2008/0248758	A1	10/2008	Schedelbeck et al.
2008/0248846	A1	10/2008	Stronach et al.
2008/0278378	A1	11/2008	Chang et al.
2008/0309452	A1	12/2008	Zeine
2009/0002493	A1	1/2009	Kates
2009/0019183	A1	1/2009	Wu et al.
2009/0036065	A1	2/2009	Siu
2009/0047998	A1	2/2009	Alberth, Jr.
2009/0058354	A1	3/2009	Harrison
2009/0058361	A1	3/2009	John
2009/0067208	A1	3/2009	Martin et al.
2009/0096412	A1	4/2009	Huang
2009/0096413	A1	4/2009	Partovi
2009/0102292	A1	4/2009	Cook et al.
2009/0102296	A1	4/2009	Greene et al.
2009/0108679	A1	4/2009	Porwal
2009/0128262	A1	5/2009	Lee et al.
2009/0157911	A1	6/2009	Aihara
2009/0200985	A1	8/2009	Zane et al.
2009/0206791	A1	8/2009	Jung
2009/0207092	A1	8/2009	Nysen et al.
2009/0218884	A1	9/2009	Soar
2009/0218891	A1	9/2009	McCollough
2009/0219903	A1	9/2009	Alamouti et al.
2009/0243397	A1	10/2009	Cook et al.
2009/0264069	A1	10/2009	Yamasuge
2009/0280866	A1	11/2009	Lo et al.
2009/0281678	A1	11/2009	Wakamatsu
2009/0284082	A1	11/2009	Mohammadian

(56) **References Cited**

U.S. PATENT DOCUMENTS

2009/0284083	A1	11/2009	Karalis et al.
2009/0284220	A1	11/2009	Toncich et al.
2009/0284227	A1	11/2009	Mohammadian et al.
2009/0284325	A1	11/2009	Rossiter et al.
2009/0286475	A1	11/2009	Toncich et al.
2009/0291634	A1	11/2009	Saarisalo
2009/0299175	A1	12/2009	Bernstein et al.
2009/0312046	A1	12/2009	Clevernger et al.
2009/0315412	A1	12/2009	Yamamoto et al.
2009/0322281	A1	12/2009	Kamijo et al.
2010/0001683	A1	1/2010	Huang et al.
2010/0007307	A1	1/2010	Baarman et al.
2010/0007569	A1	1/2010	Sim et al.
2010/0019686	A1	1/2010	Gutierrez, Jr.
2010/0026605	A1	2/2010	Yang et al.
2010/0027379	A1	2/2010	Saulnier et al.
2010/0029383	A1	2/2010	Dai
2010/0033021	A1	2/2010	Bennett
2010/0033390	A1	2/2010	Alamouti et al.
2010/0041453	A1	2/2010	Grimm, Jr.
2010/0044123	A1	2/2010	Perlman et al.
2010/0054200	A1	3/2010	Tsai
2010/0060534	A1	3/2010	Oodachi
2010/0075607	A1	3/2010	Hosoya
2010/0079005	A1	4/2010	Hyde et al.
2010/0082193	A1	4/2010	Chiappetta
2010/0087227	A1	4/2010	Francos et al.
2010/0090524	A1	4/2010	Obayashi
2010/0090656	A1	4/2010	Shearer et al.
2010/0109443	A1	5/2010	Cook et al.
2010/0119234	A1	5/2010	Suematsu et al.
2010/0123618	A1	5/2010	Martin et al.
2010/0123624	A1	5/2010	Minear et al.
2010/0127660	A1	5/2010	Cook et al.
2010/0142418	A1	6/2010	Nishioka et al.
2010/0142509	A1	6/2010	Zhu et al.
2010/0151808	A1	6/2010	Toncich et al.
2010/0156721	A1	6/2010	Alamouti et al.
2010/0164433	A1	7/2010	Janefalker et al.
2010/0171461	A1	7/2010	Baarman et al.
2010/0174629	A1	7/2010	Taylor et al.
2010/0176934	A1	7/2010	Chou et al.
2010/0181961	A1	7/2010	Novak et al.
2010/0181964	A1	7/2010	Huggins et al.
2010/0194206	A1	8/2010	Burdo et al.
2010/0201189	A1	8/2010	Kirby et al.
2010/0201201	A1	8/2010	Mobarhan et al.
2010/0201314	A1	8/2010	Toncich et al.
2010/0207572	A1	8/2010	Kirby et al.
2010/0210233	A1	8/2010	Cook et al.
2010/0214177	A1	8/2010	Parsche
2010/0225270	A1	9/2010	Jacobs et al.
2010/0227570	A1	9/2010	Hendin
2010/0237709	A1	9/2010	Hall et al.
2010/0244576	A1	9/2010	Hillan et al.
2010/0256831	A1	10/2010	Abramo et al.
2010/0259110	A1	10/2010	Kurs et al.
2010/0259447	A1	10/2010	Crouch
2010/0264747	A1	10/2010	Hall et al.
2010/0277003	A1	11/2010	Von Novak et al.
2010/0277121	A1	11/2010	Hall et al.
2010/0279606	A1	11/2010	Hillan et al.
2010/0289341	A1	11/2010	Ozaki et al.
2010/0295372	A1	11/2010	Hyde et al.
2010/0308767	A1	12/2010	Rofougaran et al.
2010/0309079	A1	12/2010	Rofougaran et al.
2010/0309088	A1	12/2010	Hyvonen et al.
2010/0315045	A1	12/2010	Zeine
2010/0316163	A1	12/2010	Forenza et al.
2010/0327766	A1	12/2010	Recker et al.
2010/0328044	A1	12/2010	Waffenschmidt et al.
2010/0332401	A1	12/2010	Prahlad et al.
2011/0018360	A1	1/2011	Baarman et al.
2011/0028114	A1	2/2011	Kerselaers
2011/0031928	A1	2/2011	Soar
2011/0032149	A1	2/2011	Leabman
2011/0032866	A1	2/2011	Leabman
2011/0034190	A1	2/2011	Leabman
2011/0034191	A1	2/2011	Leabman
2011/0043047	A1	2/2011	Karalis et al.
2011/0043163	A1	2/2011	Baarman et al.
2011/0043327	A1	2/2011	Baarman et al.
2011/0050166	A1	3/2011	Cook et al.
2011/0055037	A1	3/2011	Hayashigawa et al.
2011/0056215	A1	3/2011	Ham
2011/0057607	A1	3/2011	Carobolante
2011/0062788	A1	3/2011	Chen et al.
2011/0074342	A1	3/2011	MacLaughlin
2011/0074349	A1	3/2011	Ghovanloo
2011/0074620	A1	3/2011	Wintermantel
2011/0078092	A1	3/2011	Kim et al.
2011/0090126	A1	4/2011	Szini et al.
2011/0114401	A1	5/2011	Kanno et al.
2011/0115303	A1	5/2011	Baarman et al.
2011/0115432	A1	5/2011	El-Maleh
2011/0115605	A1	5/2011	Dimig et al.
2011/0121660	A1	5/2011	Azancot et al.
2011/0122026	A1	5/2011	DeLaquil et al.
2011/0127845	A1	6/2011	Walley et al.
2011/0127952	A1	6/2011	Walley et al.
2011/0133655	A1	6/2011	Recker et al.
2011/0133691	A1	6/2011	Hautanen
2011/0148578	A1	6/2011	Aloi et al.
2011/0151789	A1	6/2011	Viglione et al.
2011/0154429	A1	6/2011	Stantchev
2011/0156494	A1	6/2011	Mashinsky
2011/0156640	A1	6/2011	Moshfeghi
2011/0163128	A1	7/2011	Taguchi et al.
2011/0175455	A1	7/2011	Hashiguchi
2011/0175461	A1	7/2011	Tinaphong
2011/0181120	A1	7/2011	Liu et al.
2011/0182245	A1	7/2011	Malkamaki et al.
2011/0184842	A1	7/2011	Melen
2011/0188207	A1	8/2011	Won et al.
2011/0194543	A1	8/2011	Zhao et al.
2011/0195722	A1	8/2011	Walter et al.
2011/0199046	A1	8/2011	Tsai et al.
2011/0215086	A1	9/2011	Yeh
2011/0217923	A1	9/2011	Ma
2011/0220634	A1	9/2011	Yeh
2011/0221389	A1	9/2011	Won et al.
2011/0222272	A1	9/2011	Yeh
2011/0243040	A1	10/2011	Khan et al.
2011/0243050	A1	10/2011	Yanover
2011/0244913	A1	10/2011	Kim et al.
2011/0248573	A1	10/2011	Kanno et al.
2011/0248575	A1	10/2011	Kim et al.
2011/0249678	A1	10/2011	Bonicatto
2011/0254377	A1	10/2011	Widmer et al.
2011/0254503	A1	10/2011	Widmer et al.
2011/0259953	A1	10/2011	Baarman et al.
2011/0273977	A1	11/2011	Shapira et al.
2011/0278941	A1	11/2011	Krishna et al.
2011/0279226	A1	11/2011	Chen et al.
2011/0281535	A1	11/2011	Low et al.
2011/0282415	A1	11/2011	Eckhoff et al.
2011/0285213	A1	11/2011	Kowalewski
2011/0286374	A1	11/2011	Shin et al.
2011/0291489	A1	12/2011	Tsai et al.
2011/0302078	A1	12/2011	Failing
2011/0304116	A1	12/2011	Baarman
2011/0304437	A1	12/2011	Beeler
2012/0013196	A1	1/2012	Kim et al.
2012/0013198	A1	1/2012	Uramoto et al.
2012/0013296	A1	1/2012	Heydari et al.
2012/0019419	A1	1/2012	Prat et al.
2012/0043887	A1	2/2012	Mesibov
2012/0051109	A1	3/2012	Kim et al.
2012/0051294	A1	3/2012	Guillouard
2012/0056486	A1	3/2012	Endo et al.
2012/0056741	A1	3/2012	Zhu et al.
2012/0074891	A1	3/2012	Anderson et al.
2012/0231856	A1	3/2012	Lee et al.
2012/0080957	A1	4/2012	Cooper et al.

(56) **References Cited**

U.S. PATENT DOCUMENTS

2012/0086284	A1	4/2012	Capanella et al.
2012/0095617	A1	4/2012	Martin et al.
2012/0098350	A1	4/2012	Campanella et al.
2012/0098485	A1	4/2012	Kang et al.
2012/0099675	A1	4/2012	Kitamura et al.
2012/0103562	A1	5/2012	Clayton
2012/0104849	A1	5/2012	Jackson
2012/0105252	A1	5/2012	Wang
2012/0112532	A1	5/2012	Kesler et al.
2012/0119914	A1	5/2012	Uchida
2012/0126743	A1	5/2012	Rivers, Jr.
2012/0132647	A1	5/2012	Beverly et al.
2012/0133214	A1	5/2012	Yun et al.
2012/0146426	A1	6/2012	Sabo
2012/0146576	A1	6/2012	Partovi
2012/0146577	A1	6/2012	Tanabe
2012/0147802	A1	6/2012	Ukita et al.
2012/0149307	A1	6/2012	Terada et al.
2012/0150670	A1	6/2012	Taylor et al.
2012/0153894	A1	6/2012	Widmer et al.
2012/0157019	A1	6/2012	Li
2012/0161531	A1	6/2012	Kim et al.
2012/0161544	A1	6/2012	Kashiwagi et al.
2012/0169276	A1	7/2012	Wang
2012/0169278	A1	7/2012	Choi
2012/0173418	A1	7/2012	Beardsmore et al.
2012/0181973	A1	7/2012	Lyden
2012/0182427	A1	7/2012	Marshall
2012/0187851	A1	8/2012	Huggins et al.
2012/0193999	A1	8/2012	Zeine
2012/0201153	A1	8/2012	Bharadia et al.
2012/0201173	A1	8/2012	Jian et al.
2012/0206299	A1	8/2012	Valdes-Garcia
2012/0212072	A1	8/2012	Miyabayashi et al.
2012/0214536	A1	8/2012	Kim et al.
2012/0200399	A1	9/2012	Chae
2012/0228956	A1	9/2012	Kamata
2012/0235636	A1	9/2012	Partovi
2012/0242283	A1	9/2012	Kim et al.
2012/0248886	A1	10/2012	Kesler et al.
2012/0248891	A1	10/2012	Drennen
2012/0249051	A1	10/2012	Son et al.
2012/0262002	A1	10/2012	Widmer et al.
2012/0267900	A1	10/2012	Huffman et al.
2012/0268238	A1	10/2012	Park et al.
2012/0274154	A1	11/2012	DeLuca
2012/0280650	A1	11/2012	Kim et al.
2012/0292993	A1	11/2012	Mettler et al.
2012/0293021	A1	11/2012	Teggatz et al.
2012/0293119	A1	11/2012	Park et al.
2012/0299389	A1	11/2012	Lee et al.
2012/0299540	A1	11/2012	Perry
2012/0299541	A1	11/2012	Perry
2012/0299542	A1	11/2012	Perry
2012/0300588	A1	11/2012	Perry
2012/0300592	A1	11/2012	Perry
2012/0300593	A1	11/2012	Perry
2012/0306705	A1	12/2012	Sakurai et al.
2012/0309295	A1	12/2012	Maguire
2012/0309308	A1	12/2012	Kim et al.
2012/0309332	A1	12/2012	Liao
2012/0313449	A1	12/2012	Kurs
2012/0326660	A1	12/2012	Lu et al.
2013/0002550	A1	1/2013	Zalewski
2013/0024059	A1	1/2013	Miller et al.
2013/0026981	A1	1/2013	Van Der Lee
2013/0026982	A1	1/2013	Rothenbaum
2013/0032589	A1	2/2013	Chung
2013/0033571	A1	2/2013	Steen
2013/0038124	A1	2/2013	Newdoll et al.
2013/0038402	A1	2/2013	Karalis et al.
2013/0043738	A1	2/2013	Park et al.
2013/0049471	A1	2/2013	Oleynik
2013/0049475	A1	2/2013	Kim et al.
2013/0057078	A1	3/2013	Lee
2013/0057205	A1	3/2013	Lee et al.
2013/0057210	A1	3/2013	Negaard et al.
2013/0057364	A1	3/2013	Kesler et al.
2013/0063082	A1	3/2013	Lee et al.
2013/0063143	A1	3/2013	Adalsteinsson et al.
2013/0069444	A1	3/2013	Waffenschmidt et al.
2013/0077650	A1	3/2013	Traxler et al.
2013/0078918	A1	3/2013	Crowley et al.
2013/0082651	A1	4/2013	Park et al.
2013/0082653	A1	4/2013	Lee et al.
2013/0083774	A1	4/2013	Son et al.
2013/0088082	A1	4/2013	Kang et al.
2013/0088090	A1	4/2013	Wu
2013/0088192	A1	4/2013	Eaton
2013/0088331	A1	4/2013	Cho
2013/0093388	A1	4/2013	Partovi
2013/0099389	A1	4/2013	Hong et al.
2013/0099586	A1	4/2013	Kato
2013/0106197	A1	5/2013	Bae et al.
2013/0107023	A1	5/2013	Tanaka et al.
2013/0119777	A1	5/2013	Rees
2013/0119929	A1	5/2013	Partovi
2013/0120117	A1	5/2013	Ueda et al.
2013/0132010	A1	5/2013	Winger et al.
2013/0134923	A1	5/2013	Smith
2013/0137455	A1	5/2013	Xia
2013/0141037	A1	6/2013	Jenwatanavet et al.
2013/0148341	A1	6/2013	Williams
2013/0149975	A1	6/2013	Yu et al.
2013/0154387	A1	6/2013	Lee et al.
2013/0155748	A1	6/2013	Sundstrom
2013/0157729	A1	6/2013	Tabe
2013/0169061	A1	7/2013	Microshnichenko et al.
2013/0169119	A1	7/2013	Gray
2013/0169348	A1	7/2013	Shi
2013/0171939	A1	7/2013	Tian et al.
2013/0178253	A1	7/2013	Karaoguz
2013/0181881	A1	7/2013	Christie et al.
2013/0193769	A1	8/2013	Mehta et al.
2013/0197320	A1	8/2013	Albert et al.
2013/0200064	A1	8/2013	Clayton
2013/0207477	A1	8/2013	Nam et al.
2013/0207604	A1	8/2013	Zeine
2013/0210357	A1	8/2013	Qin et al.
2013/0221757	A1	8/2013	Cho et al.
2013/0234530	A1	9/2013	Miyauchi
2013/0234536	A1	9/2013	Chemishkian et al.
2013/0234658	A1	9/2013	Endo et al.
2013/0241306	A1	9/2013	Aber et al.
2013/0241468	A1	9/2013	Moshfeghi
2013/0241474	A1	9/2013	Moshfeghi
2013/0249478	A1	9/2013	Hirano
2013/0249479	A1	9/2013	Partovi
2013/0254578	A1	9/2013	Huang et al.
2013/0264997	A1	10/2013	Lee et al.
2013/0268782	A1	10/2013	Tam et al.
2013/0270923	A1	10/2013	Cook et al.
2013/0278209	A1	10/2013	Von Novak
2013/0285477	A1	10/2013	Lo et al.
2013/0285606	A1	10/2013	Ben-Shalom et al.
2013/0288600	A1	10/2013	Kuusilinna et al.
2013/0293423	A1	11/2013	Moshfeghi
2013/0310020	A1	11/2013	Kazuhiro
2013/0311798	A1	11/2013	Sultenfuss
2013/0328417	A1	12/2013	Takeuchi
2013/0334883	A1	12/2013	Kim et al.
2013/0339108	A1	12/2013	Ryder et al.
2013/0343251	A1	12/2013	Zhang
2014/0001846	A1	1/2014	Mosebrook
2014/0001875	A1	1/2014	Nahidipour
2014/0001876	A1	1/2014	Fujiwara et al.
2014/0006017	A1	1/2014	Sen
2014/0008992	A1	1/2014	Leabman
2014/0008993	A1	1/2014	Leabman
2014/0009108	A1	1/2014	Leabman
2014/0009110	A1	1/2014	Lee
2014/0011531	A1	1/2014	Burstrom et al.
2014/0015336	A1	1/2014	Weber et al.
2014/0015344	A1	1/2014	Mohamadi

(56) **References Cited**

U.S. PATENT DOCUMENTS

2014/0021907 A1 1/2014 Yun et al.
2014/0021908 A1 1/2014 McCool
2014/0035524 A1 2/2014 Zeine
2014/0035526 A1 2/2014 Tripathi et al.
2014/0049422 A1 2/2014 Von Novak et al.
2014/0055098 A1 2/2014 Lee et al.
2014/0057618 A1 2/2014 Zirwas et al.
2014/0062395 A1 3/2014 Kwon et al.
2014/0086125 A1 3/2014 Polo et al.
2014/0091756 A1 4/2014 Ofstein et al.
2014/0091968 A1 4/2014 Harel et al.
2014/0111147 A1 4/2014 Soar
2014/0113689 A1 4/2014 Lee
2014/0117946 A1 5/2014 Muller et al.
2014/0118140 A1 5/2014 Amis
2014/0132210 A1 5/2014 Partovi
2014/0133279 A1 5/2014 Khuri-Yakub
2014/0139034 A1 5/2014 Sankar et al.
2014/0139039 A1 5/2014 Cook et al.
2014/0139180 A1 5/2014 Kim et al.
2014/0141838 A1 5/2014 Cai et al.
2014/0142876 A1 5/2014 John et al.
2014/0143933 A1 5/2014 Low et al.
2014/0145879 A1 5/2014 Pan
2014/0152117 A1 6/2014 Sanker
2014/0159647 A1* 6/2014 Nishioka H02J 7/025 320/107
2014/0159651 A1 6/2014 Von Novak et al.
2014/0159652 A1 6/2014 Hall et al.
2014/0159662 A1 6/2014 Furui
2014/0159667 A1 6/2014 Kim et al.
2014/0175893 A1 6/2014 Sengupta et al.
2014/0176054 A1 6/2014 Porat et al.
2014/0177399 A1 6/2014 Teng et al.
2014/0184148 A1 7/2014 Van Der Lee et al.
2014/0184155 A1 7/2014 Cha
2014/0184163 A1 7/2014 Das et al.
2014/0184170 A1 7/2014 Jeong
2014/0191568 A1 7/2014 Partovi
2014/0194092 A1 7/2014 Wanstedt et al.
2014/0194095 A1 7/2014 Wanstedt et al.
2014/0206384 A1 7/2014 Kim et al.
2014/0210281 A1 7/2014 Ito et al.
2014/0217967 A1 8/2014 Zeine et al.
2014/0225805 A1 8/2014 Pan et al.
2014/0232320 A1 8/2014 Ento July et al.
2014/0239733 A1 8/2014 Mach et al.
2014/0241231 A1 8/2014 Zeine
2014/0245036 A1 8/2014 Oishi
2014/0246416 A1 9/2014 White
2014/0247152 A1 9/2014 Proud
2014/0252813 A1 9/2014 Lee et al.
2014/0252866 A1 9/2014 Walsh et al.
2014/0265725 A1 9/2014 Angle et al.
2014/0265727 A1 9/2014 Berte
2014/0265943 A1 9/2014 Angle et al.
2014/0266025 A1 9/2014 Jakubowski
2014/0273892 A1 9/2014 Nourbakhsh
2014/0281655 A1 9/2014 Angle et al.
2014/0292090 A1 10/2014 Cordeiro et al.
2014/0312706 A1 10/2014 Fiorello et al.
2014/0325118 A1 10/2014 Shimizu et al.
2014/0327320 A1 11/2014 Muhs et al.
2014/0327390 A1 11/2014 Park et al.
2014/0346860 A1 11/2014 Aubry et al.
2014/0354063 A1 12/2014 Leabman et al.
2014/0354221 A1 12/2014 Leabman et al.
2014/0355718 A1 12/2014 Guan et al.
2014/0357309 A1 12/2014 Leabman et al.
2014/0368048 A1 12/2014 Leabman
2014/0368161 A1 12/2014 Leabman et al.
2014/0375253 A1 12/2014 Leabman et al.
2014/0375255 A1 12/2014 Leabman et al.
2014/0375258 A1 12/2014 Arkhipenkov
2014/0375261 A1 12/2014 Manova-Elssibony et al.
2014/0376646 A1 12/2014 Leabman et al.
2015/0001949 A1 1/2015 Leabman et al.
2015/0002086 A1 1/2015 Matos et al.
2015/0003207 A1 1/2015 Lee et al.
2015/0008980 A1 1/2015 Kim et al.
2015/0011160 A1 1/2015 Uurgovan et al.
2015/0015180 A1 1/2015 Miller et al.
2015/0015182 A1 1/2015 Brandtman et al.
2015/0015192 A1 1/2015 Leabman et al.
2015/0015194 A1 1/2015 Leabman et al.
2015/0015195 A1 1/2015 Leabman et al.
2015/0021990 A1 1/2015 Myer et al.
2015/0022008 A1 1/2015 Leabman et al.
2015/0022009 A1 1/2015 Leabman et al.
2015/0022010 A1 1/2015 Leabman et al.
2015/0023204 A1 1/2015 Wil et al.
2015/0028688 A1 1/2015 Masaoka
2015/0028694 A1 1/2015 Leabman et al.
2015/0028697 A1 1/2015 Leabman et al.
2015/0029397 A1 1/2015 Leabman et al.
2015/0035715 A1 2/2015 Kim et al.
2015/0041459 A1 2/2015 Leabman et al.
2015/0042264 A1 2/2015 Leabman et al.
2015/0042265 A1 2/2015 Leabman et al.
2015/0044977 A1 2/2015 Ramasamy et al.
2015/0046526 A1 2/2015 Bush et al.
2015/0061404 A1 3/2015 Lamenza et al.
2015/0076917 A1 3/2015 Leabman et al.
2015/0076927 A1 3/2015 Leabman et al.
2015/0077036 A1 3/2015 Leabman et al.
2015/0077037 A1 3/2015 Leabman et al.
2015/0091520 A1 4/2015 Blum et al.
2015/0097663 A1 4/2015 Sloo et al.
2015/0102681 A1 4/2015 Leabman et al.
2015/0102764 A1 4/2015 Leabman et al.
2015/0102769 A1 4/2015 Leabman et al.
2015/0108848 A1 4/2015 Joehren
2015/0115877 A1 4/2015 Aria et al.
2015/0115878 A1 4/2015 Park
2015/0123483 A1 5/2015 Leabman et al.
2015/0123496 A1 5/2015 Leabman et al.
2015/0128733 A1 5/2015 Taylor et al.
2015/0130285 A1 5/2015 Leabman et al.
2015/0130293 A1 5/2015 Hajimiri et al.
2015/0148664 A1 5/2015 Stolka et al.
2015/0155737 A1 6/2015 Mayo
2015/0155738 A1 6/2015 Leabman et al.
2015/0162751 A1 6/2015 Leabman et al.
2015/0162779 A1 6/2015 Lee et al.
2015/0171656 A1 6/2015 Leabman et al.
2015/0171658 A1 6/2015 Manova-Elssibony et al.
2015/0171931 A1 6/2015 Won et al.
2015/0177326 A1 6/2015 Chakraborty et al.
2015/0188352 A1 7/2015 Peek et al.
2015/0199665 A1 7/2015 Chu
2015/0207333 A1 7/2015 Baarman et al.
2015/0207542 A1 7/2015 Zeine
2015/0222126 A1 8/2015 Leabman et al.
2015/0236520 A1 8/2015 Baarman
2015/0244187 A1 8/2015 Horie
2015/0244201 A1 8/2015 Chu
2015/0244341 A1 8/2015 Ritter et al.
2015/0249484 A1 9/2015 Mach et al.
2015/0255989 A1 9/2015 Walley et al.
2015/0263534 A1 9/2015 Lee et al.
2015/0263548 A1 9/2015 Cooper
2015/0270741 A1 9/2015 Leabman et al.
2015/0280484 A1 10/2015 Radziemski et al.
2015/0288438 A1 10/2015 Maltsev et al.
2015/0318729 A1 11/2015 Leabman
2015/0326024 A1 11/2015 Bell et al.
2015/0326025 A1 11/2015 Bell et al.
2015/0326063 A1 11/2015 Leabman et al.
2015/0326068 A1 11/2015 Bell et al.
2015/0326069 A1 11/2015 Petras et al.
2015/0326070 A1 11/2015 Petras et al.
2015/0326072 A1 11/2015 Petras et al.
2015/0326142 A1 11/2015 Petras et al.
2015/0326143 A1 11/2015 Petras et al.

(56) **References Cited**

U.S. PATENT DOCUMENTS

2015/0333528	A1	11/2015	Leabman
2015/0333529	A1	11/2015	Leabman
2015/0333573	A1	11/2015	Leabman
2015/0333800	A1	11/2015	Perry et al.
2015/0340759	A1	11/2015	Bridgelall et al.
2015/0340903	A1	11/2015	Bell et al.
2015/0340909	A1	11/2015	Bell et al.
2015/0340910	A1	11/2015	Petras et al.
2015/0340911	A1	11/2015	Bell et al.
2015/0341087	A1	11/2015	Moore et al.
2015/0349574	A1	12/2015	Leabman
2015/0358222	A1	12/2015	Berger et al.
2015/0365138	A1	12/2015	Miller et al.
2016/0005068	A1	1/2016	Im et al.
2016/0012695	A1	1/2016	Bell et al.
2016/0013656	A1	1/2016	Bell et al.
2016/0013677	A1	1/2016	Bell et al.
2016/0013678	A1	1/2016	Bell et al.
2016/0013855	A1	1/2016	Campos
2016/0020636	A1	1/2016	Khlat
2016/0020649	A1	1/2016	Bell et al.
2016/0020830	A1	1/2016	Bell et al.
2016/0042206	A1	2/2016	Pesavento et al.
2016/0054395	A1	2/2016	Bell et al.
2016/0054396	A1	2/2016	Bell et al.
2016/0054440	A1	2/2016	Younis
2016/0056635	A1	2/2016	Bell
2016/0056640	A1	2/2016	Mao
2016/0056669	A1	2/2016	Bell
2016/0056966	A1	2/2016	Bell
2016/0065005	A1	3/2016	Won et al.
2016/0079799	A1	3/2016	Khlat
2016/0094092	A1	3/2016	Davlantes et al.
2016/0099601	A1	4/2016	Leabman et al.
2016/0099602	A1	4/2016	Leabman et al.
2016/0099609	A1	4/2016	Leabman et al.
2016/0099610	A1	4/2016	Leabman et al.
2016/0099611	A1	4/2016	Leabman et al.
2016/0099612	A1	4/2016	Leabman et al.
2016/0099613	A1	4/2016	Leabman et al.
2016/0099614	A1	4/2016	Leabman et al.
2016/0099755	A1	4/2016	Leabman et al.
2016/0099756	A1	4/2016	Leabman et al.
2016/0099757	A1	4/2016	Leabman et al.
2016/0099758	A1	4/2016	Leabman et al.
2016/0100124	A1	4/2016	Leabman et al.
2016/0100312	A1	4/2016	Bell et al.
2016/0126752	A1	5/2016	Vuori et al.
2016/0126776	A1	5/2016	Kim et al.
2016/0141908	A1	5/2016	Jakl et al.
2016/0164563	A1	6/2016	Khawand et al.
2016/0181854	A1	6/2016	Leabman
2016/0181867	A1	6/2016	Daniel et al.
2016/0181873	A1	6/2016	Mitcheson et al.
2016/0191121	A1	6/2016	Bell
2016/0204622	A1	7/2016	Leabman
2016/0204642	A1	7/2016	Oh
2016/0238365	A1	8/2016	Wixey et al.
2016/0299210	A1	10/2016	Zeine
2016/0323000	A1	11/2016	Liu et al.
2016/0336804	A1	11/2016	Son et al.
2016/0339258	A1	11/2016	Perryman et al.
2016/0359367	A1	12/2016	Rothschild
2017/0005516	A9	1/2017	Leabman et al.
2017/0005530	A1	1/2017	Zeine et al.
2017/0025903	A1	1/2017	Song et al.
2017/0026087	A1	1/2017	Tanabe
2017/0043675	A1	2/2017	Jones et al.
2017/0047784	A1	2/2017	Jung et al.
2017/0077735	A1	3/2017	Leabman
2017/0077736	A1	3/2017	Leabman
2017/0077764	A1	3/2017	Bell et al.
2017/0077765	A1	3/2017	Bell et al.
2017/0077995	A1	3/2017	Leabman
2017/0085120	A1	3/2017	Leabman et al.
2017/0085437	A1	3/2017	Condeixa et al.
2017/0092115	A1	3/2017	Sloo et al.
2017/0110887	A1	4/2017	Bell et al.
2017/0134686	A9	5/2017	Leabman
2017/0163076	A1	6/2017	Park et al.
2017/0179763	A9	6/2017	Leabman

FOREIGN PATENT DOCUMENTS

EP	1081506	A1	3/2001	
EP	2397973	A1	6/2010	
EP	2346136	A1	7/2011	
EP	2545635	A2	1/2013	
JP	2006157586	A	6/2006	
JP	2007043432	A	2/2007	
JP	2008167017	A	7/2008	
KR	20060061776	A	6/2006	
KR	20070044302	A	4/2007	
KR	100755144	B1	9/2007	
KR	20110132059	A	12/2011	
KR	20110135540	A1	12/2011	
KR	20120009843	A	2/2012	
KR	20120108759	A	10/2012	
KR	1020130026977	A	3/2013	
WO	9952173	A2	10/1999	
WO	WO 200111716	A1	2/2001	
WO	2004077550	A1	9/2004	
WO	2003091943	A1	11/2006	
WO	WO 2006122783		11/2006	
WO	2008156571	A2	12/2008	
WO	WO 2010022181	A1	2/2010	
WO	WO 2010039246	A1	4/2010	
WO	2010138994	A1	12/2010	
WO	2011112022	A2	9/2011	
WO	WO 2012177283	A1	12/2012	
WO	2013/031988	A1	3/2013	
WO	2013035190	A1	3/2013	
WO	WO 2013042399	A1	3/2013	
WO	WO 2013052950	A1	4/2013	
WO	WO 2013105920	A2	7/2013	
WO	WO 2014075103	A1	5/2014	
WO	2014132258	A1	9/2014	
WO	2014182788	A2	11/2014	
WO	2014182788	A3	11/2014	
WO	WO 2014197472	A1	12/2014	
WO	WO 2014209587	A1	12/2014	
WO	WO 2015038773	A1	3/2015	
WO	WO 2015077730	A1 *	5/2015	..... H02J 17/00
WO	WO 2015097809	A1	7/2015	
WO	WO 2015161323	A1	10/2015	
WO	WO 2016048512	A1	3/2016	
WO	WO 2016187357	A1	11/2016	

OTHER PUBLICATIONS

International Search Report and Written Opinion dated Mar. 4, 2016 in International Application No. PCT/US15/67291, 10 pages.

International Search Report and Written Opinion of the International Searching Authority dated Mar. 30, 2016 in International Application No. PCT/US15/67250, 12 pages.

Notification of Transmittal of The International Search Report and The Written Opinion of the International Searching Authority, or the Declaration issued in International Application No. PCT/US15/67242 dated Mar. 16, 2016.

International Search Report and Written Opinion of the International Searching Authority dated Mar. 10, 2016 in International Application No. PCT/US15/67243, 16 pages.

Notification of Transmittal of the International Search Report and the Written Opinion of the International Searching Authority, or the Declaration issued in International Application No. PCT/US15/67245 dated Mar. 17, 2016, 9 pages.

International Search Report and Written Opinion dated Feb. 2, 2016 in International Application No. PCT/US15/67287, 9 pages.

International Search Report issued in International Application No. PCT/US2014/037109 dated Apr. 8, 2016, 4 pages.

(56) **References Cited**

OTHER PUBLICATIONS

International Search Report and Written Opinion dated Dec. 22, 2014 in International Application No. PCT/US2014/055195, 12 pages.
Singh, V. et al., "Wireless Power Transfer Using Metamaterial Bonded Microstrip Antenna for Smart Grid WSN," In Fourth International Conference on Advances in Computing and Communications (ICACC), Aug. 27-29, 2014, Abstract, p. 299.
Energous Corp., ISRWO, PCT/US2014/037170 , dated Sep. 15, 2014, 11 pgs.
Energous Corp., IPRP, PCT/US2014/037170, dated Nov. 10, 2015, 8 pgs.
Energous Corp., Written Opinion, PCT/US2014/041534, dated Oct. 13, 2014, 6 pgs.
Energous Corp., IPRP, PCT/US2014/041534, dated Dec. 29, 2015, 7 pgs.
Energous Corp., IPRP, PCT/US2014/046956, dated Jan. 19, 2016, 7 pgs.
Energous Corp., Written Opinion, PCT/US2014/037072, dated Sep. 12, 2014, 5 pgs.
Energous Corp., IPRP, PCT/US2014/037072, dated Nov. 10, 2015, 6 pgs.
Energous Corp., ISRWO, PCT/US2014/068568, dated Mar. 20, 2015, 10 pgs.
Energous Corp., IPRP, PCT/US2014/068568, dated Jun. 14, 2016, 8 pgs.
Energous Corp., IPRP, PCT/US2014/055195, dated Mar. 22, 2016, 9 pgs.
Energous Corp., IPRP, PCT/US2015/067291, dated Jul. 4, 2017, 4 pgs.
Energous Corp., IPRP, PCT/US2015/067242, dated Jun. 27, 2017, 7 pgs.
Energous Corp., IPRP, PCT/US2015/067243, dated Jun. 27, 2017, 7 pgs.
Energous Corp., ISRWO, PCT/US2014/037109, dated Apr. 8, 2016, 12 pgs.
Energous Corp., IPRP, PCT/US2014/037109, dated Apr. 12, 2016, 9 pgs.
Energous Corp., IPRP, PCT/US2015/067275, dated Jul. 4, 2017, 7 pgs.
Energous Corp., IPRP, PCT/US2015/067245, dated Jun. 27, 2017, 7 pgs.
Energous Corp., ISRWO, PCT/US2014/041546, dated Oct. 16, 2014, 12 pgs.
Energous Corp., IPRP, PCT/US2014/041546, dated Dec. 29, 2015, 9 pgs.
Energous Corp., IPRP, PCT/US2015/67250, dated Mar. 30, 2016, 10 pgs.
Energous Corp., ISRWO, PCT/US2015/067325, dated Mar. 10, 2016, 9 pgs.
Energous Corp., IPRP, PCT/US2015/067325, dated Jul. 4, 2017, 8 pgs.
Energous Corp., ISRWO, PCT/US2014/040697, dated Oct. 1, 2014, 12 pgs.
Energous Corp., IPRP, PCT/US2014/040697, dated Dec. 8, 2015, 9 pgs.
Energous Corp., ISRWO, PCT/US2014/040705, dated Sep. 23, 2014, 8 pgs.
Energous Corp., IPRP, PCT/US2014/040705, dated Dec. 8, 2015, 6 pgs.
Energous Corp., ISRWO, PCT/US2015/067249, dated Mar. 29, 2016, 8 pgs.
Energous Corp., IPRP, PCT/US2015/067249, dated Jun. 27, 2017, 7 pgs.
Energous Corp., ISRWO, PCT/US2015/067246, dated May 11, 2016, 18 pgs.
Energous Corp., IPRP, PCT/US2015/067246, dated Jun. 27, 2017, 9 pgs.
Energous Corp., ISRWO, PCT/US2014/059317, dated Feb. 24, 2015, 13 pgs.
Energous Corp., IPRP, PCT/US2014/059317, dated Apr. 12, 2016, 10 pgs.
Energous Corp., ISRWO, PCT/US2014/049669, dated Nov. 13, 2014, 10 pgs.
Energous Corp., IPRP, PCT/US2014/049669, dated Feb. 9, 2016, 8 pgs.
Energous Corp., ISRWO, PCT/US2014/041323, dated Oct. 1, 2014, 10 pgs.
Energous Corp., IPRP, PCT/US2014/041323, dated Dec. 22, 2015, 8 pgs.
Energous Corp., ISRWO, PCT/US2014/048002, dated Nov. 13, 2014, 11 pgs.
Energous Corp., IPRP, PCT/US2014/048002, dated Feb. 12, 2015, 8 pgs.
Energous Corp., ISRWO, PCT/US2014/062682, dated Feb. 12, 2015, 10 pgs.
Energous Corp., IPRP, PCT/US2014/062682, dated May 3, 2016, 8 pgs.
Energous Corp., ISRWO, PCT/US2014/049666, dated Nov. 10, 2014, 7 pgs.
Energous Corp., IPRP, PCT/US2014/049666, dated Feb. 9, 2016, 5 pgs.
Energous Corp., ISRWO, PCT/US2014/046961, dated Nov. 24, 2014, 16 pgs.
Energous Corp., IPRP, PCT/US2014/046961, dated Jan. 17, 2016, 8 pgs.
Energous Corp., ISRWO, PCT/US2015/067279, dated Mar. 11, 2015, 13 pgs.
Energous Corp., IPRP, PCT/US2015/067279, dated Jul. 4, 2017, 7 pgs.
Energous Corp., ISRWO, PCT/US2014/041342, dated Jan. 27, 2015, 10 pgs.
Energous Corp., IPRP, PCT/US2014/041342, dated Dec. 15, 2015, 8 pgs.
Energous Corp., ISRWO, PCT/US2014/046941, dated Nov. 6, 2014, 11 pgs.
Energous Corp., IPRP, PCT/US2014/046941, dated Jan. 19, 2016, 9 pgs.
Energous Corp., ISRWO, PCT/US2014/062661, dated Jan. 27, 2015, 12 pgs.
Energous Corp., IPRP, PCT/US2014/062661, dated May 3, 2016, 10 pgs.
Energous Corp., ISRWO, PCT/US2014/059871, dated Jan. 23, 2015, 12 pgs.
Energous Corp., IPRP, PCT/US2014/059871, dated Apr. 12, 2016, 9 pgs.
Energous Corp., ISRWO, PCT/US2014/045102, dated Oct. 28, 2014, 14 pgs.
Energous Corp., IPRP, PCT/US2014/045102, dated Jan. 12, 2016, 11 pgs.
Energous Corp., ISRWO, PCT/US2014/059340, dated Jan. 15, 2015, 13 pgs.
Energous Corp., IPRP, PCT/US2014/059340, dated Apr. 12, 2016, 11 pgs.
Energous Corp., ISRWO, PCT/US2015/067282, dated Jul. 5, 2016, 7 pgs.
Energous Corp., IPRP, PCT/US2015/067282, dated Jul. 4, 2017, 6 pgs.
Energous Corp., ISRWO, PCT/US2014/041558, dated Oct. 10, 2014, 8 pgs.
Energous Corp., IPRP, PCT/US2014/041558, dated Dec. 29, 2015, 6 pgs.
Energous Corp., ISRWO, PCT/US2014/045119, dated Jan. 12, 2016, 11 pgs.
Energous Corp., IPRP, PCT/US2014/045119, dated Jan. 12, 2016, 9 pgs.
Energous Corp., ISRWO PCT/US2014/045237, dated Oct. 13, 2014, 16 pgs.
Energous Corp., IPRP, PCT/US2014/045237, dated Jan. 12, 2016, 12 pgs.
Energous Corp., ISRWO, PCT/US2014/054897, dated Feb. 17, 2015, 10 pgs.

(56) **References Cited**

OTHER PUBLICATIONS

Energous Corp., IPRP, PCT/US2014/054897, dated Mar. 15, 2016, 8 pgs.
Energous Corp., ISRWO, PCT/US2015/067334, dated Mar. 3, 2016, 6 pgs.
Energous Corp., IPRP, PCT/US2015/067334, dated Jul. 4, 2017, 5 pgs.
Energous Corp., ISRWO, PCT/US2014/047963, dated Nov. 7, 2014, 13 pgs.
Energous Corp., IPRP, PCT/US2014/047963, dated Jan. 26, 2016, 10 pgs.
Energous Corp., ISRWO, PCT/US2014/054891, dated Dec. 18, 2014, 12 pgs.
Energous Corp., IPRP, PCT/US2014/054891, dated Mar. 15, 2016, 10 pgs.
Energous Corp., ISRWO, PCT/US2014/054953, dated Dec. 4, 2014, 7 pgs.
Energous Corp., IPRP, PCT/US2014/054953, dated Mar. 22, 2016, 5 pgs.
Energous Corp., ISRWO, PCT/US2015/067294, dated Mar. 29, 2016, 7 pgs.
Energous Corp., IPRP, PCT/US2015/067294, dated Jul. 4, 2017, 6 pgs.
Energous Corp., ISRWO, PCT/US2014/062672 dated Jan. 26, 2015, 11 pgs.
Energous Corp., IPRP, PCT/US2014/062672 dated May 10, 2016, 8 pgs.
Energous Corp., ISRWO, PCT/US2014/044810 dated Oct. 21, 2014, 12 pgs.
Energous Corp., IPRP, PCT/US2014/044810, dated Jan. 5, 2016, 10 pgs.
Energous Corp., ISRWO, PCT/US2015/067271, dated Mar. 11, 2016, 6 pgs.
Energous Corp., IPRP, PCT/US2015/067271, dated Jul. 4, 2017, 5 pgs.
Energous Corp., ISRWO, PCT/US2014/040648, dated Oct. 10, 2014, 11 pgs.
Energous Corp., IPRP, PCT/US2014/040648, dated Dec. 8, 2015, 8 pgs.
Energous Corp., ISRWO, PCT/US2014/049673, dated Nov. 18, 2014, 10 pgs.
Energous Corp., IPRP, PCT/US2014/049673, dated Feb. 9, 2016, 6 pgs.
Energous Corp., ISRWO, PCT/US2014/068282, dated Mar. 19, 2015, 13 pgs.
Energous Corp., IPRP, PCT/US2014/068282, dated Jun. 7, 2016, 10 pgs.
Energous Corp., ISRWO, PCT/US2014/068586, dated Mar. 20, 2015, 11 pgs.
Energous Corp., IPRP, PCT/US2014/068586, dated Jun. 14, 2016, 8 pgs.
Energous Corp., ISRWO, PCT/US2016/068504, dated Mar. 30, 2017, 8 pgs.
Energous Corp., ISRWO, PCT/US2016/068495, dated Mar. 30, 2017, 9 pgs.
Energous Corp., IPRP, PCT/US2015/067287, dated Jul. 4, 2017, 6 pgs.
Energous Corp., ISRWO, PCT/US2016/068551, dated Mar. 17, 2017, 8 pgs.
Energous Corp., ISRWO, PCT/US2016/068498, dated May 17, 2017, 8 pgs.
Energous Corp., ISRWO, PCT/US2016/068993, dated Mar. 13, 2017, 12 pgs.
Energous Corp., ISRWO, PCT/US2016/068565, dated Mar. 8, 2017, 11 pgs.
Energous Corp., ISRWO, PCT/US2016/068987, dated May 8, 2017, 10 pgs.
Energous Corp., ISRWO, PCT/US2016/069316 , dated Mar. 16, 2017, 15 pgs.
Supplementary European Search Report, EP Patent Application No. EP14818136-5, dated Jul. 21, 2016, 9 pgs.
European Search Report, EP Patent Application No. EP16189052.0, dated Jan. 31, 2017, 11 pgs.
European Search Report, EP Patent Application No. EP16189319-3, dated Feb. 1, 2017, 9 pgs.
European Search Report, EP Patent Application No. EP14822971, dated Feb. 1, 2017, 9 pgs.
European Search Report, EP Patent Application No. EP16189987, dated Feb. 1, 2017, 8 pgs.
European Search Report, EP Patent Application No. 16196205.5, dated Mar. 28, 2017.
European Search Report, EP Patent Application No. 16189300, dated Feb. 28, 2017, 4 pgs.
European Search Report, EP Patent Application No. 16189988.5, dated Mar. 1, 2017, 4 pgs.
European Search Report, EP Patent Application No. 16189982.5, dated Jan. 27, 2017, 9 pgs.
European Search Report, EP Patent Application No. 16189974, dated Mar. 2, 2017, 5 pgs.
European Search Report, EP Patent Application No. 16193743, dated Feb. 5, 2017, 5 pgs.
European Search Report, EP Patent Application No. 14868901.1, dated Jul. 7, 2017, 5 pgs.
L.H. Hsieh et al. Development of a Retrodirective Wireless Microwave Power Transmission System, IEEE, 2003 pp. 393-396.
B.D. Van Veen et al., Beamforming: A Versatile Approach to Spatial Filtering, IEEE, ASSP Magazine, Apr. 1988, pp. 4-24.
Leabman, Adaptive Band-partitioning for Interference Cancellation in Communication System, Thesis Massachusetts Institute of Technology, Feb. 1997, pp. 1-70.
Panda, SIW based Slot Array Antenna and Power Management Circuit for Wireless Energy Harvesting Applications, IEEE APSURSI, Jul. 2012, 2 pgs.
T. Gill et al. "A System for Change Detection and Human Recognition in Voxel Space using the Microsoft Kinect Sensor," 2011 IEEE Applied Imagery Pattern Recognition Workshop. 8 pgs.
J. Han et al. Enhanced Computer Vision with Microsoft Kinect Sensor: A Review, IEEE Transactions on Cybernetics vol. 43, No. 5. pp. 1318-1334.
Zhai, "A Practical wireless charging system based on ultra-wideband retro-reflective beamforming" 2010 IEEE Antennas and Propagation Society International Symposium, Toronto, ON 2010, pp. 1-4.
Mao: BeamStar: An Edge-Based Approach to Routing in Wireless Sensors Networks, IEEE Transactions on Mobile Computing, IEEE Service Center, Los Alamitos, CA US, vol. 6, No. 11, Nov. 1, 2007, 13 pgs.
Smolders—Institute of Electrical 1-15 and Electronics Engineers: "Broadband microstrip array antennas" Digest of the Antennas and Propagation Society International Symposium. Seattle, WA Jun. 19-24, 1994. Abstract.
Paolo Nenzi et al; "U-Helix: On-chip short conical antenna", 2013 7th European Conference on Antennas and Propagation (EUCAP), ISBN:978-1-4673-2187-7, IEEE, Apr. 8, 2013, 5 pgs.
Adamiuk G et al; "Compact, Dual-Polarized UWB-Antanna, Embedded in a Dielectric" IEEE Transactions on Antenna and Propagation, IEEE Service Center, Piscataway, NJ, US vol. 56, No. 2, ISSN: 0018-926X, abstract; Figure 1, Feb. 1, 2010, 8 pgs.
Mascarenas et al.; "Experimental Studies of Using Wireless Energy Transmission for Powering Embedded Sensor Nodes." Nov. 28, 2009, Journal of Sound and Vibration, pp. 2421-2433.
International Search Report dated Sep. 12, 2014 corresponding to International Patent Application No. PCT/US2014/037072, 3 pages.
International Search Report dated Jan. 27, 2015 corresponding to International Patent Application No. PCT/US2014/037170, 4 pages.
International Search Report dated Oct. 16, 2014 corresponding to International Patent Application No. PCT/US2014/041546, 4 pages.
International Search Report dated Oct. 13, 2014 corresponding to International Patent Application No. PCT/US2014/041534, 4 pages.
International Search Report dated Nov. 12, 2014 corresponding to International Patent Application No. PCT/US2014/046956, 4 pages.

(56) **References Cited**

OTHER PUBLICATIONS

Written Opinion of the International Searching Authority dated Nov. 12, 2014 corresponding to International Patent Application No. PCT/US2014/046956, 6 pages.

* cited by examiner

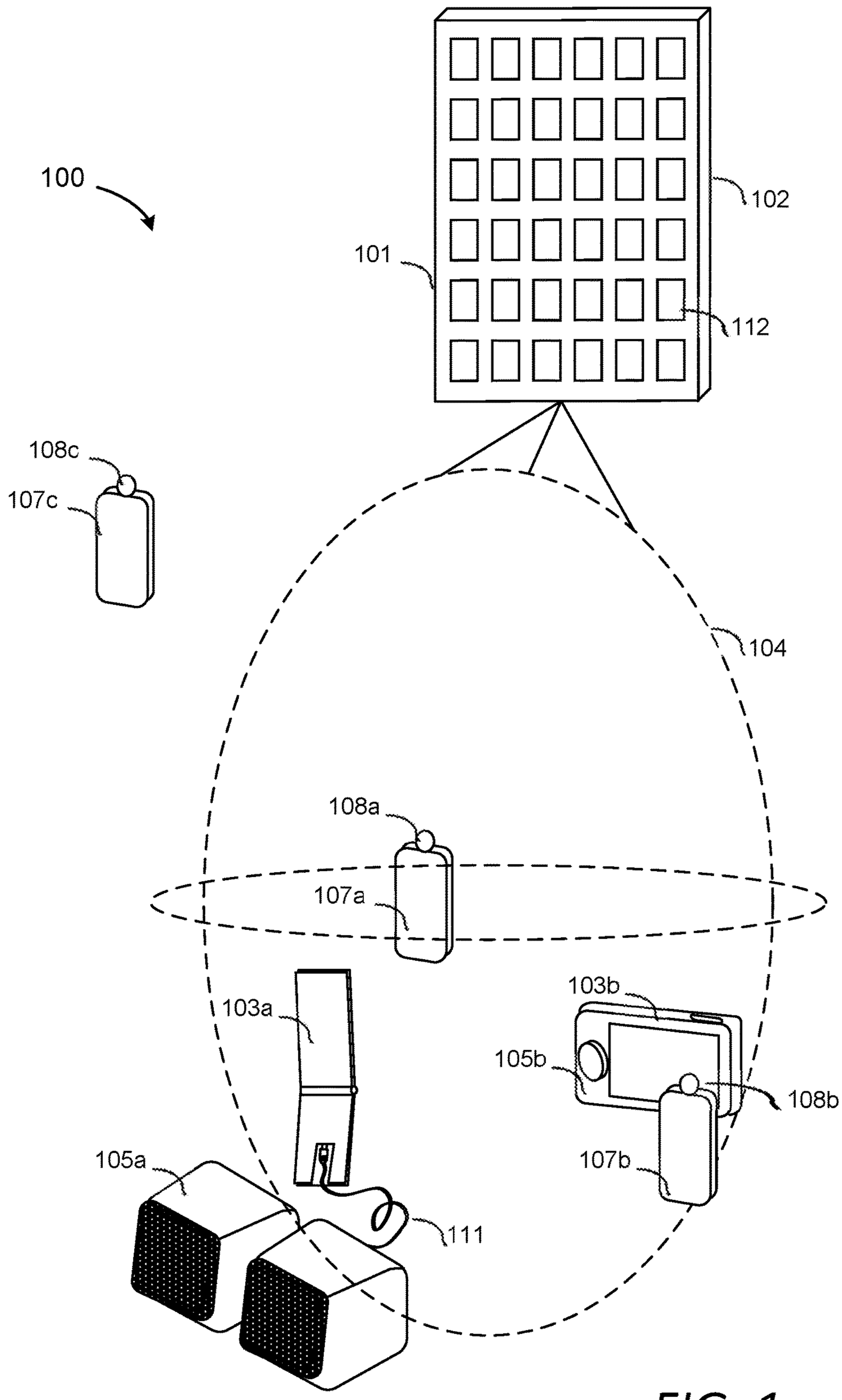
100
102
101
112
108c
107c
104
108a
107a
103b
103a
105b
108b
105a
107b
111

FIG. 1

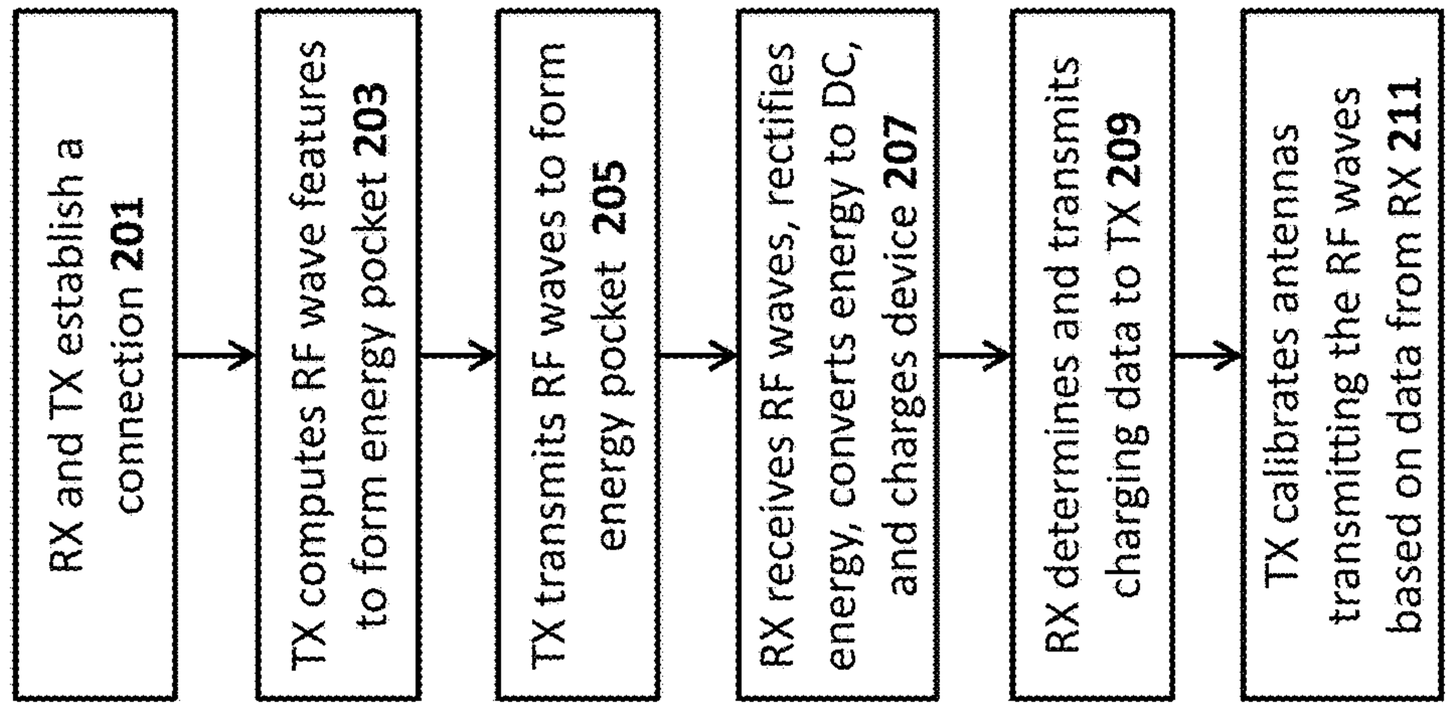
RX and TX establish a connection 201
TX computes RF wave features to form energy pocket 203
TX transmits RF waves to form energy pocket 205
RX receives RF waves, rectifies energy, converts energy to DC, and charges device 207
RX determines and transmits charging data to TX 209
TX calibrates antennas transmitting the RF waves based on data from RX 211

FIG. 2

200

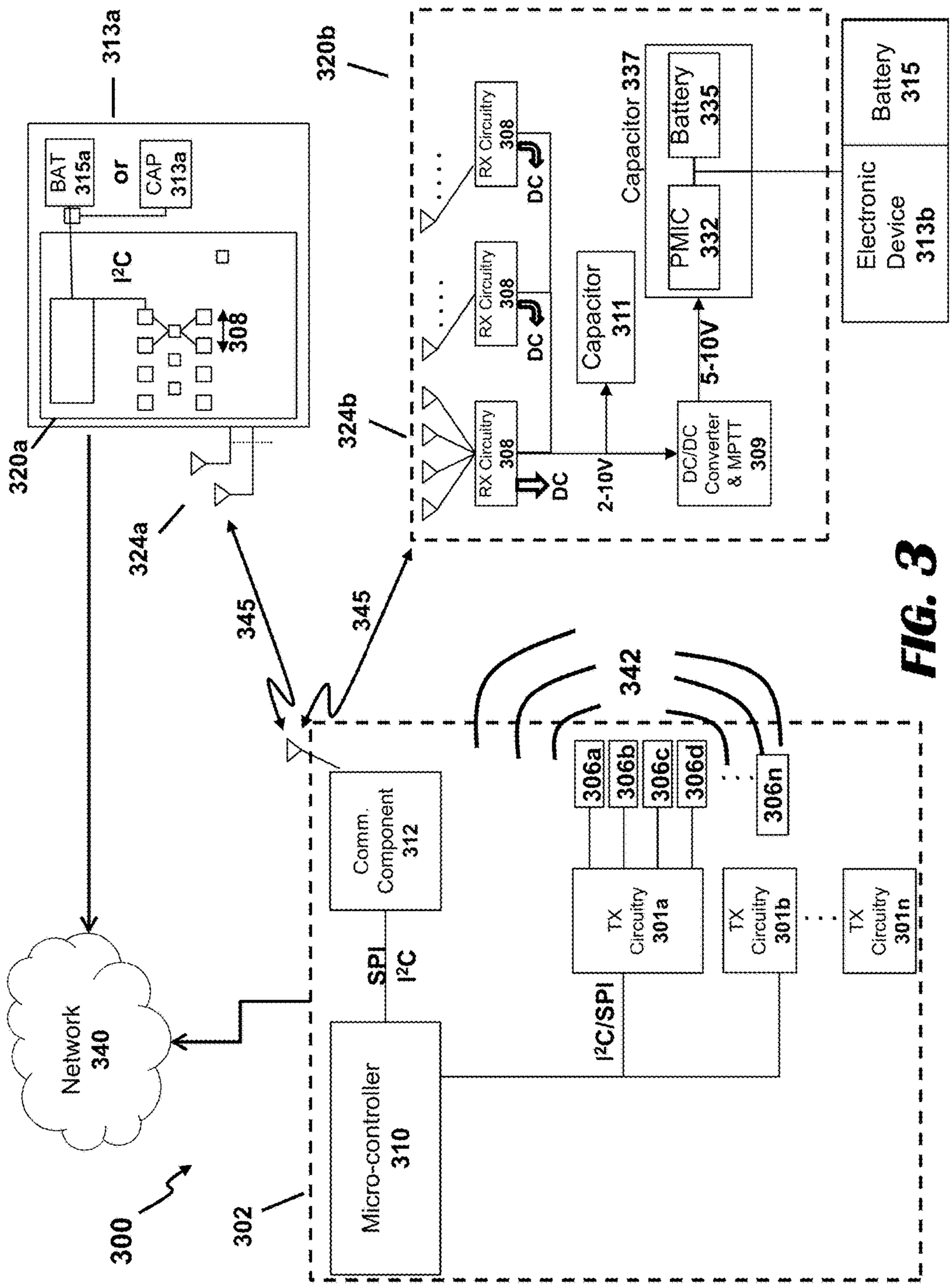
300
302
Network 340
Micro-controller 310
SPI
I²C
Comm. Component 312
I²C/SPI
TX Circuitry 301a
TX Circuitry 301b
TX Circuitry 301n
306a
306b
306c
306d
306n
342
345
345
320a
I²C
308
BAT 315a
or
CAP 313a
313a
324a
320b
324b
RX Circuitry 308
RX Circuitry 308
RX Circuitry 308
DC
DC
DC
2-10V
DC/DC Converter & MPTT 309
5-10V
Capacitor 311
Capacitor 337
PMIC 332
Battery 335
Electronic Device 313b
Battery 315

FIG. 3

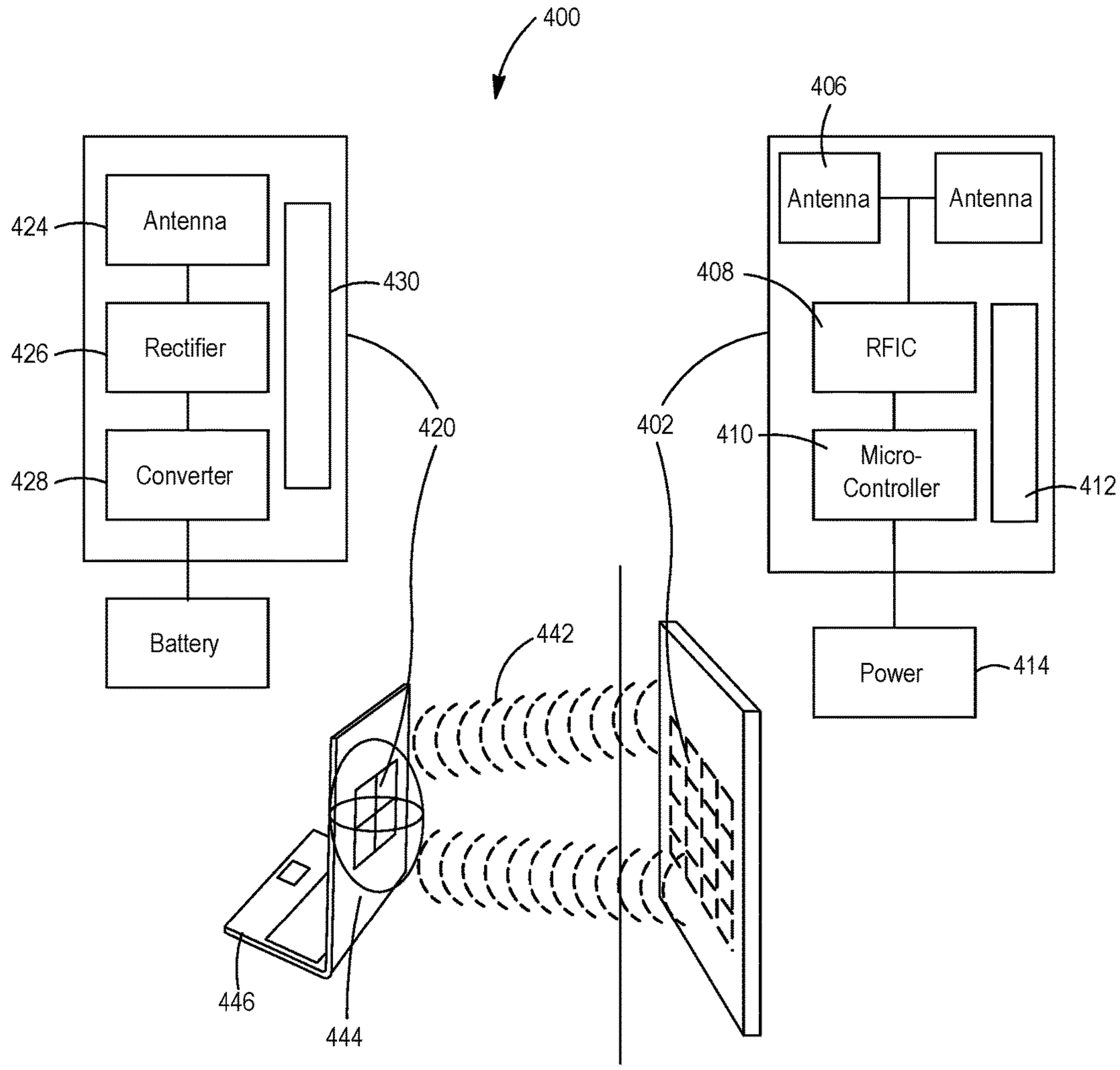
400
406
Antenna
Antenna
424
Antenna
430
408
RFIC
426
Rectifier
420
402
410
Micro-
Controller
412
428
Converter
Battery
442
Power
414
446
444

FIG. 4

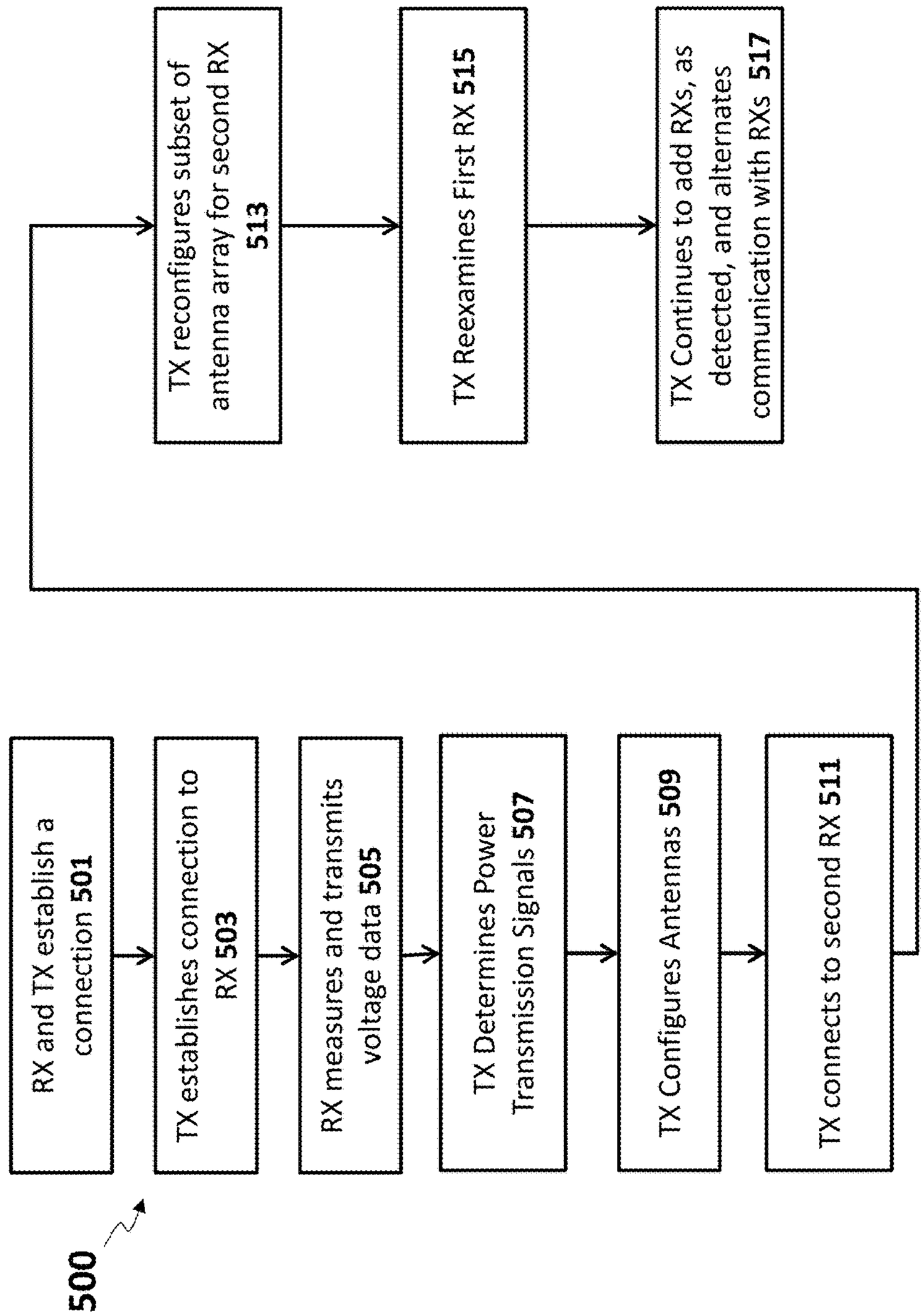
500
RX and TX establish a connection 501
TX establishes connection to RX 503
RX measures and transmits voltage data 505
TX Determines Power Transmission Signals 507
TX Configures Antennas 509
TX connects to second RX 511
TX configures subset of antenna array for second RX 513
TX Reexamines First RX 515
TX Continues to add RXs, as detected, and alternates communication with RXs 517

FIG. 5

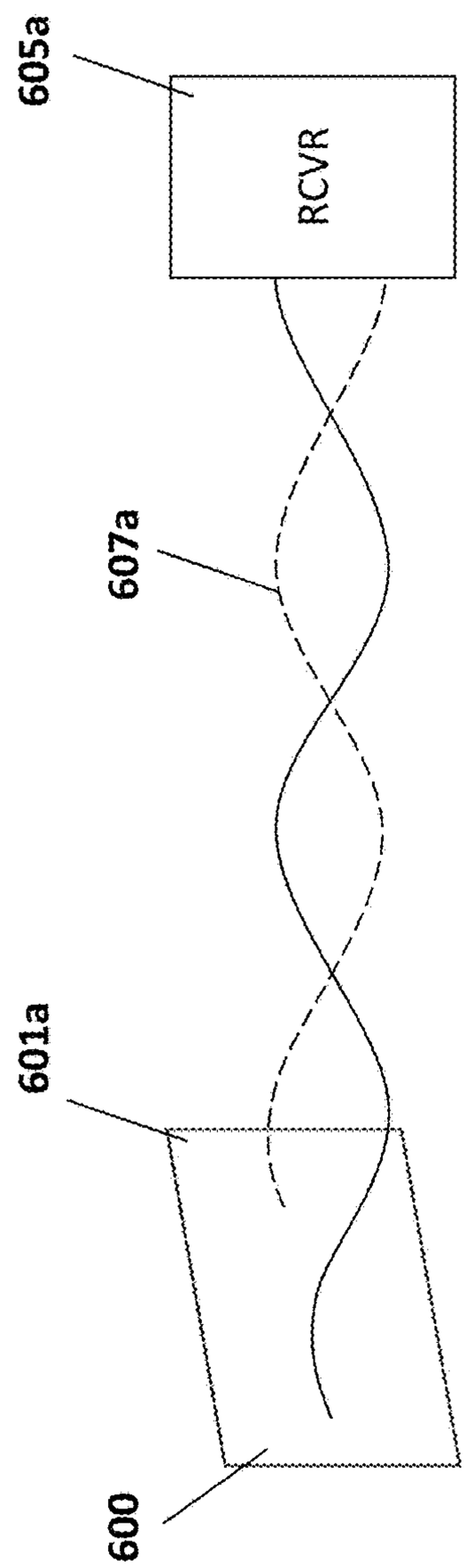

FIG. 6A

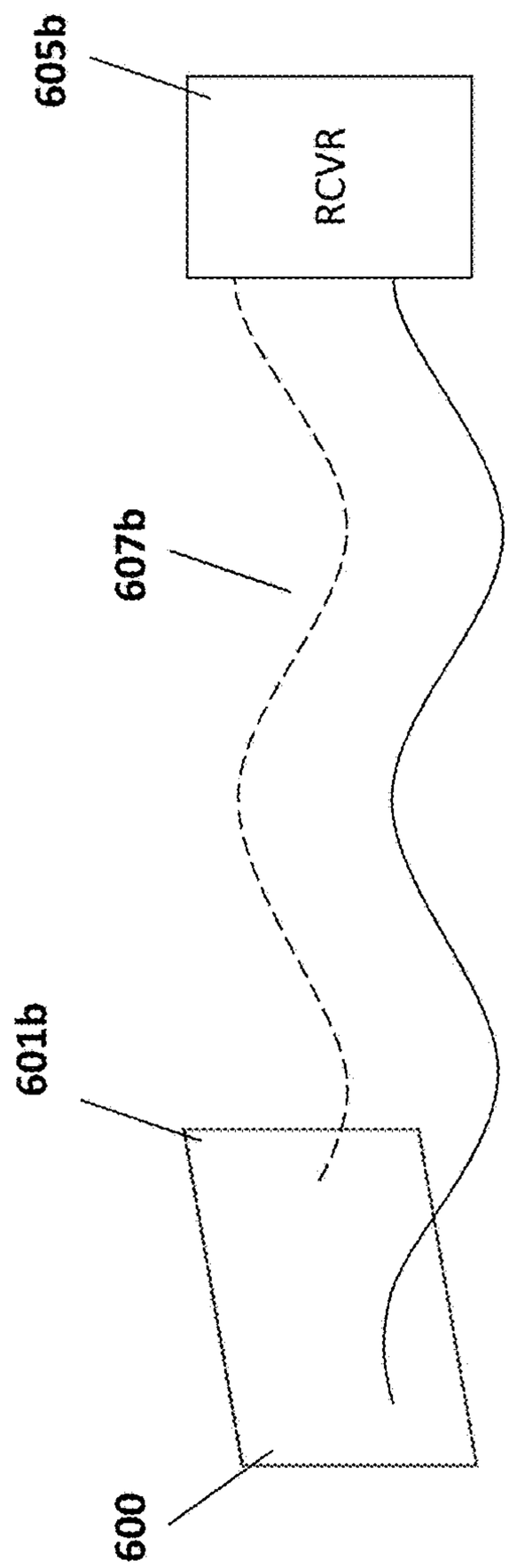

FIG. 6B

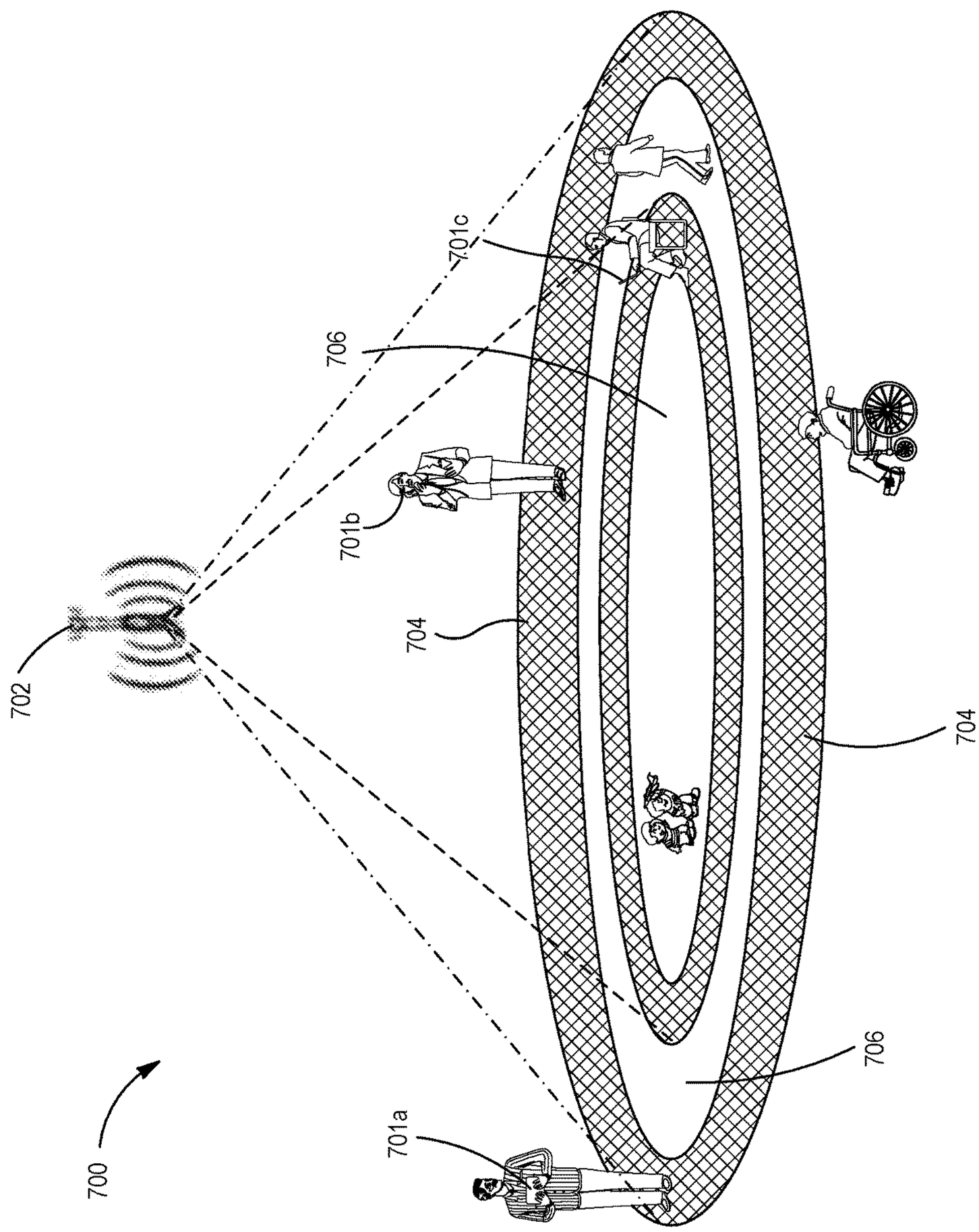

FIG. 7

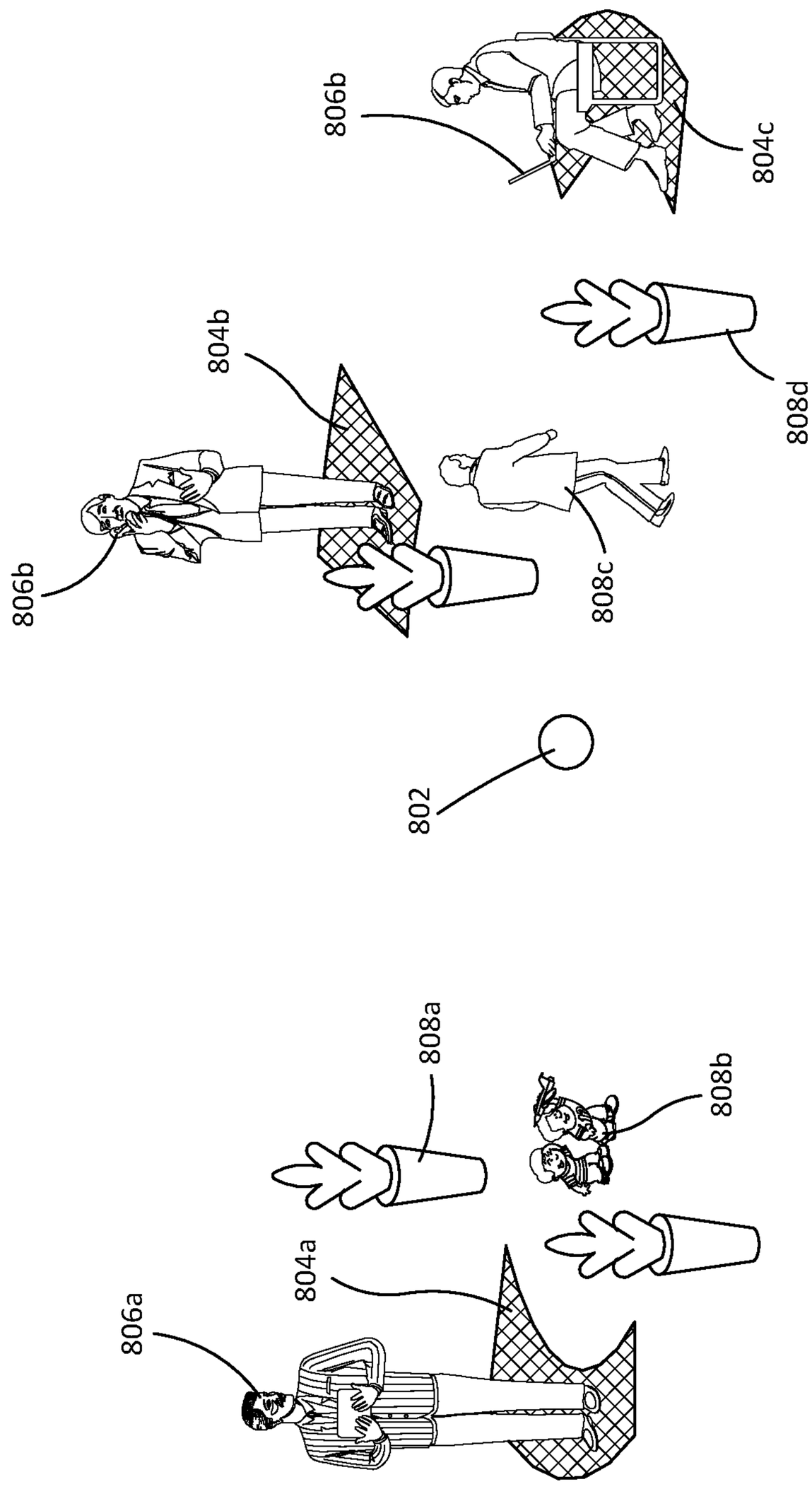

FIG. 8

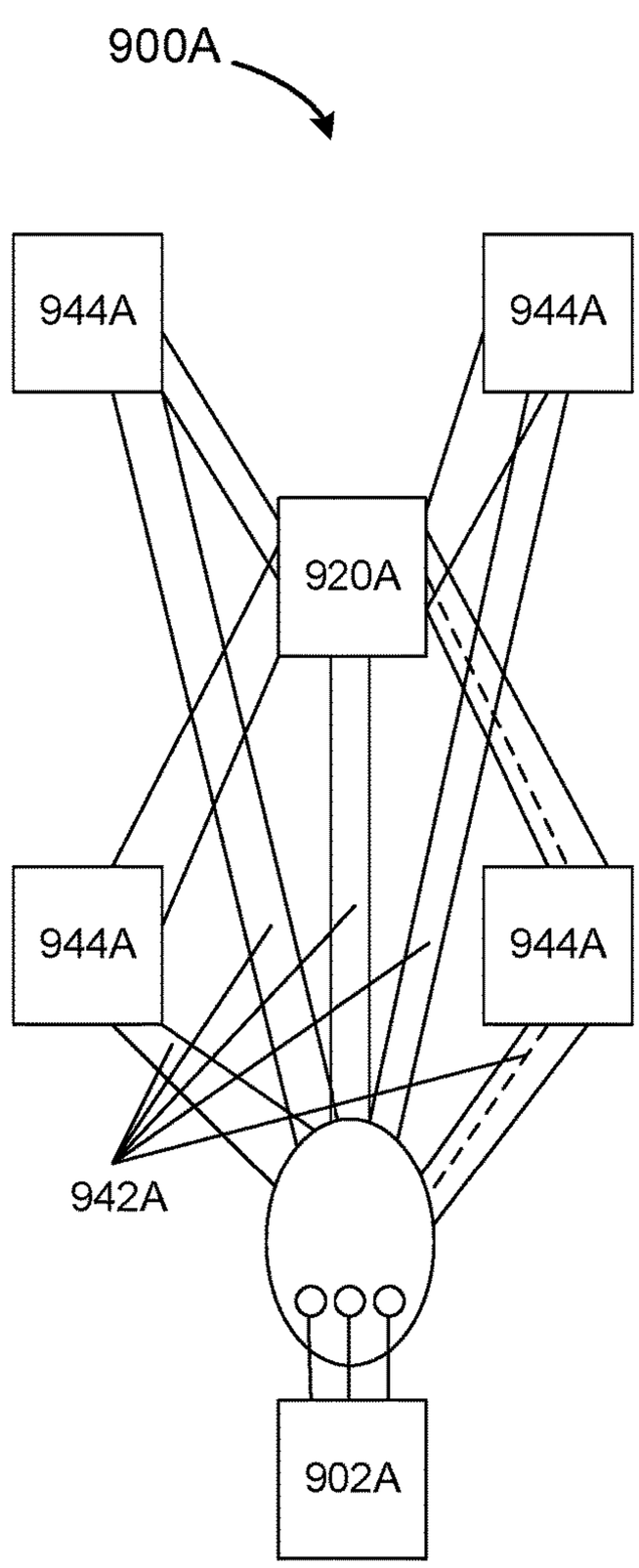
900A
944A
944A
920A
944A
944A
942A
902A

FIG. 9A

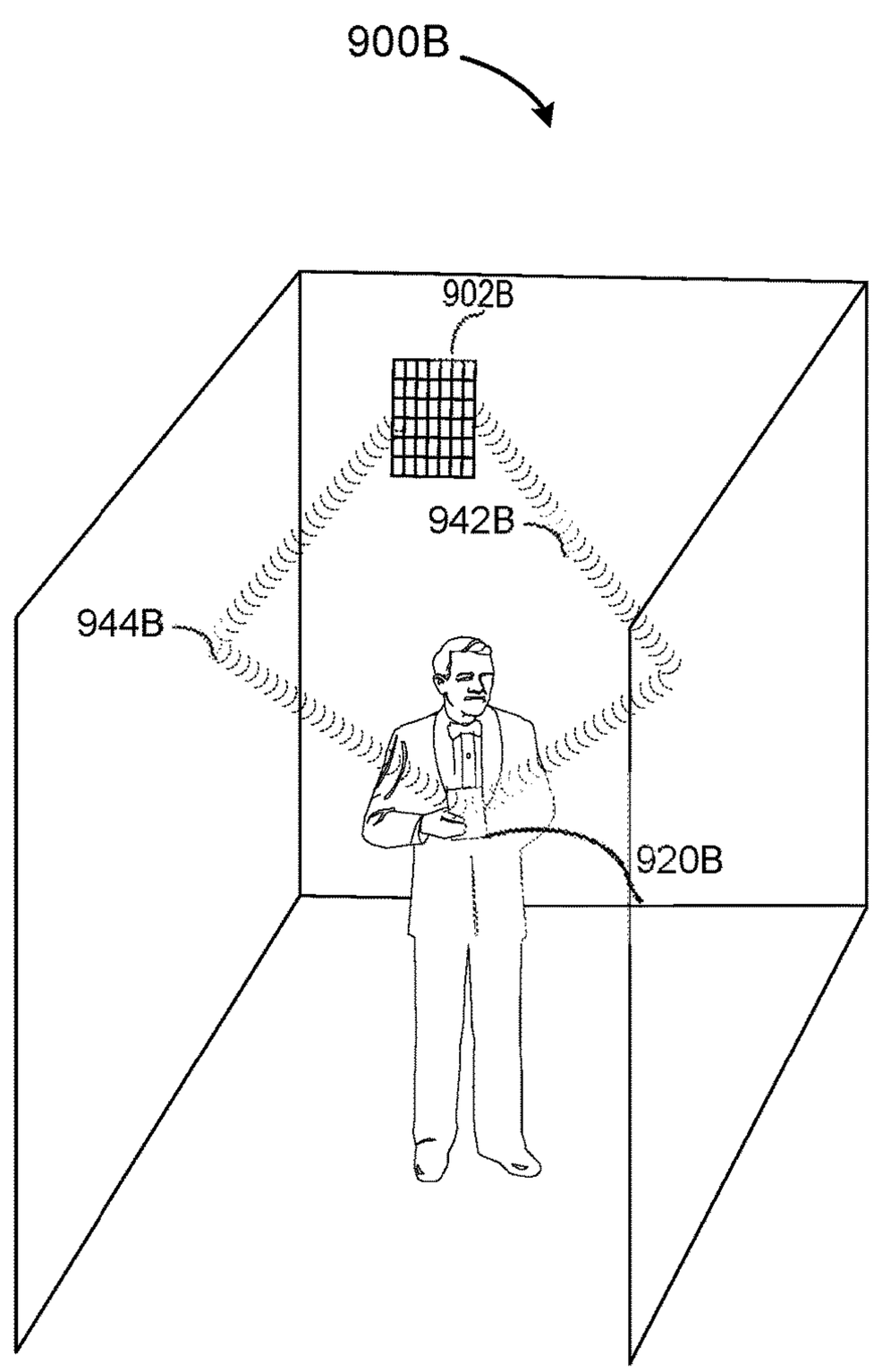
900B
902B
942B
944B
920B

FIG. 9B

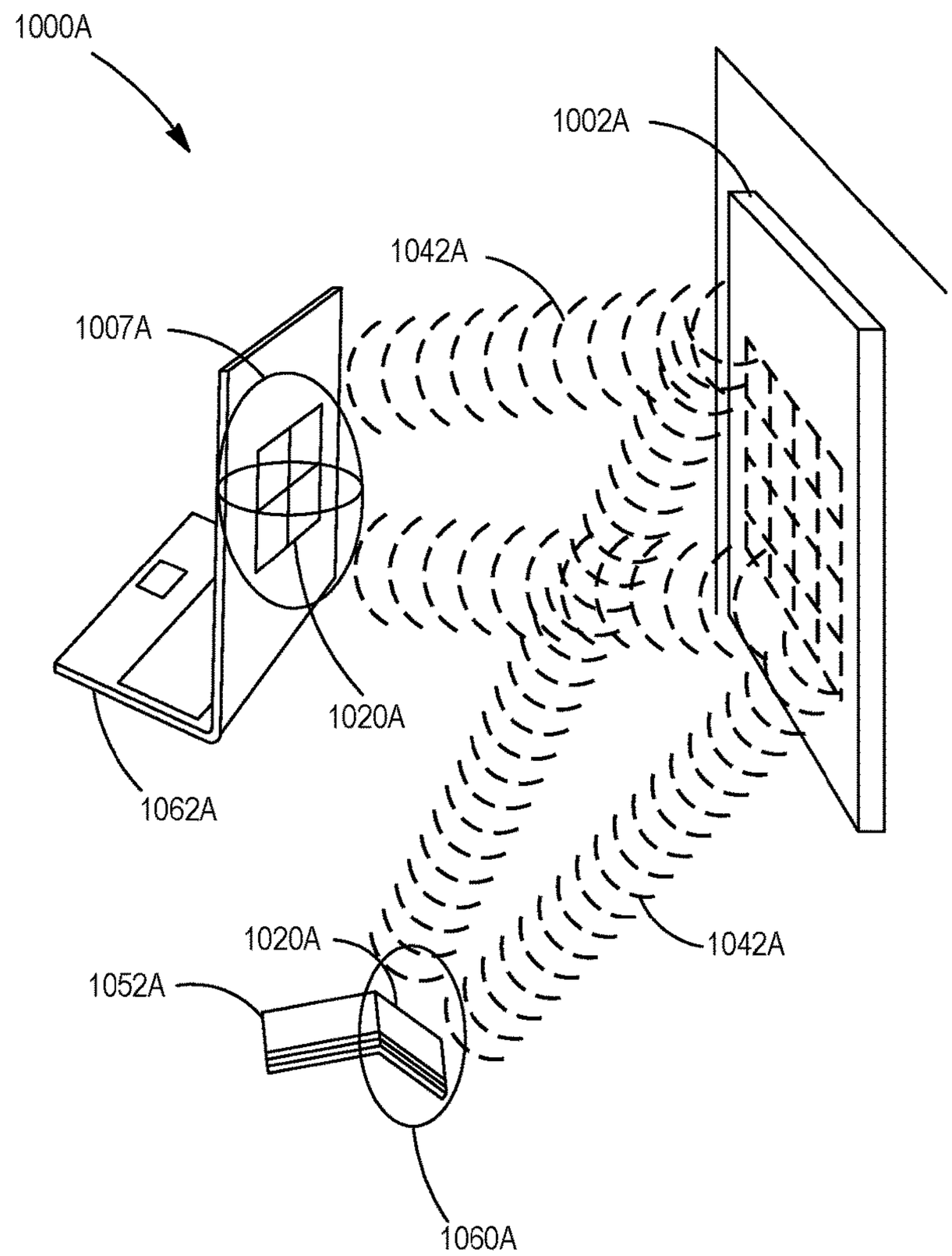
1000A
1002A
1042A
1007A
1020A
1062A
1020A
1052A
1042A
1060A

FIG. 10A

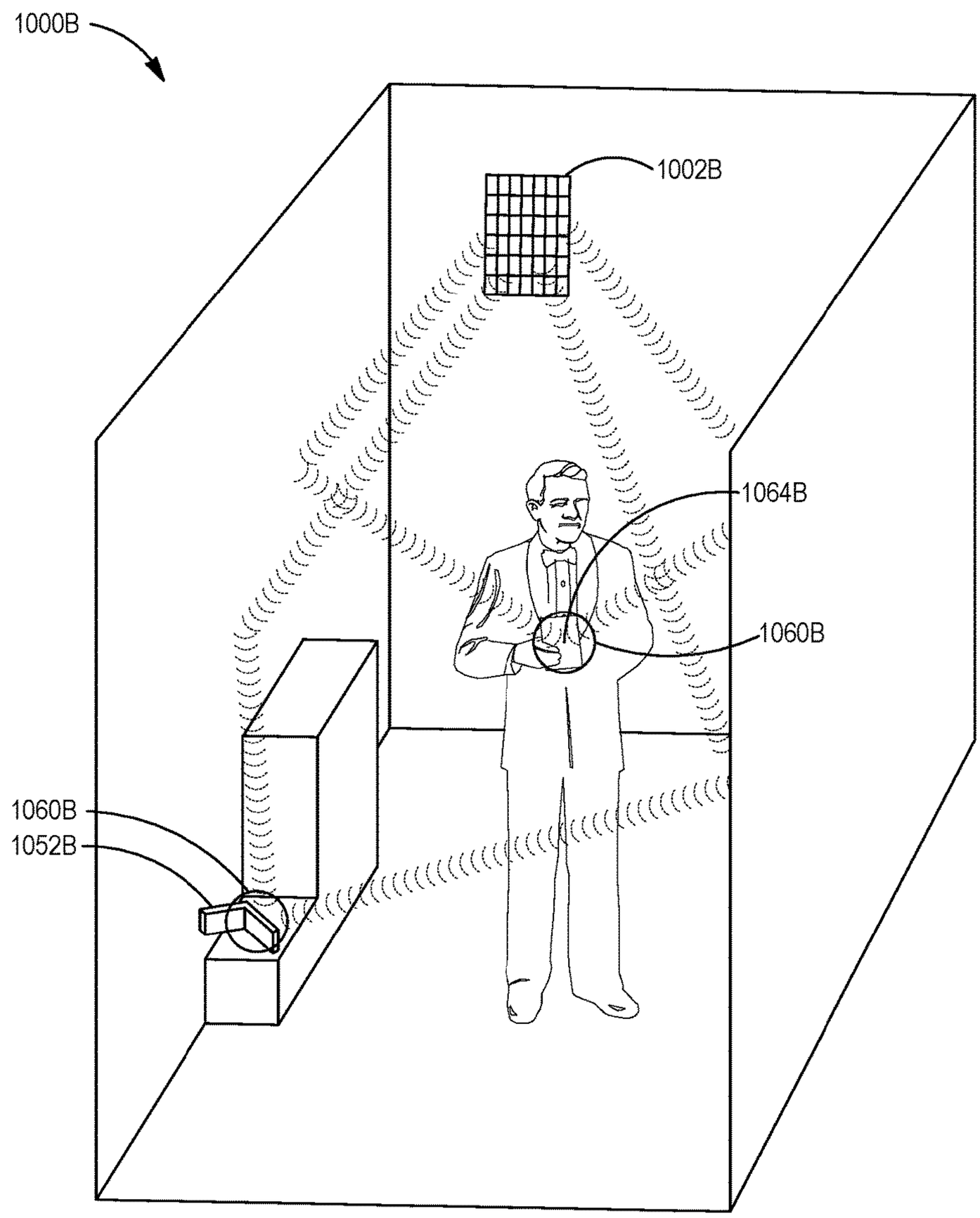

FIG. 10B

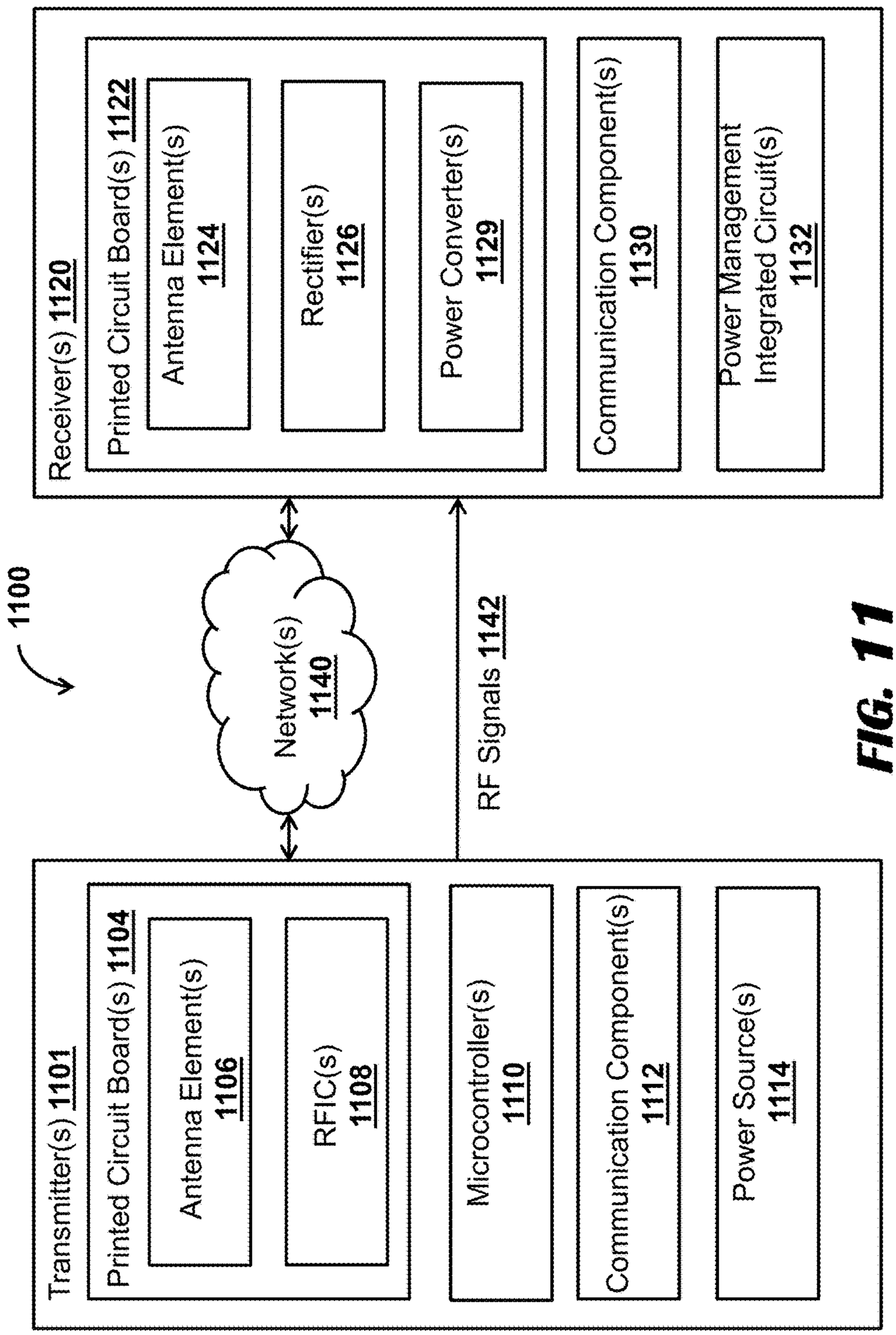
1100
Transmitter(s) 1101
Printed Circuit Board(s) 1104
Antenna Element(s) 1106
RFIC(s) 1108
Microcontroller(s) 1110
Communication Component(s) 1112
Power Source(s) 1114
Network(s) 1140
RF Signals 1142
Receiver(s) 1120
Printed Circuit Board(s) 1122
Antenna Element(s) 1124
Rectifier(s) 1126
Power Converter(s) 1129
Communication Component(s) 1130
Power Management Integrated Circuit(s) 1132

FIG. 11

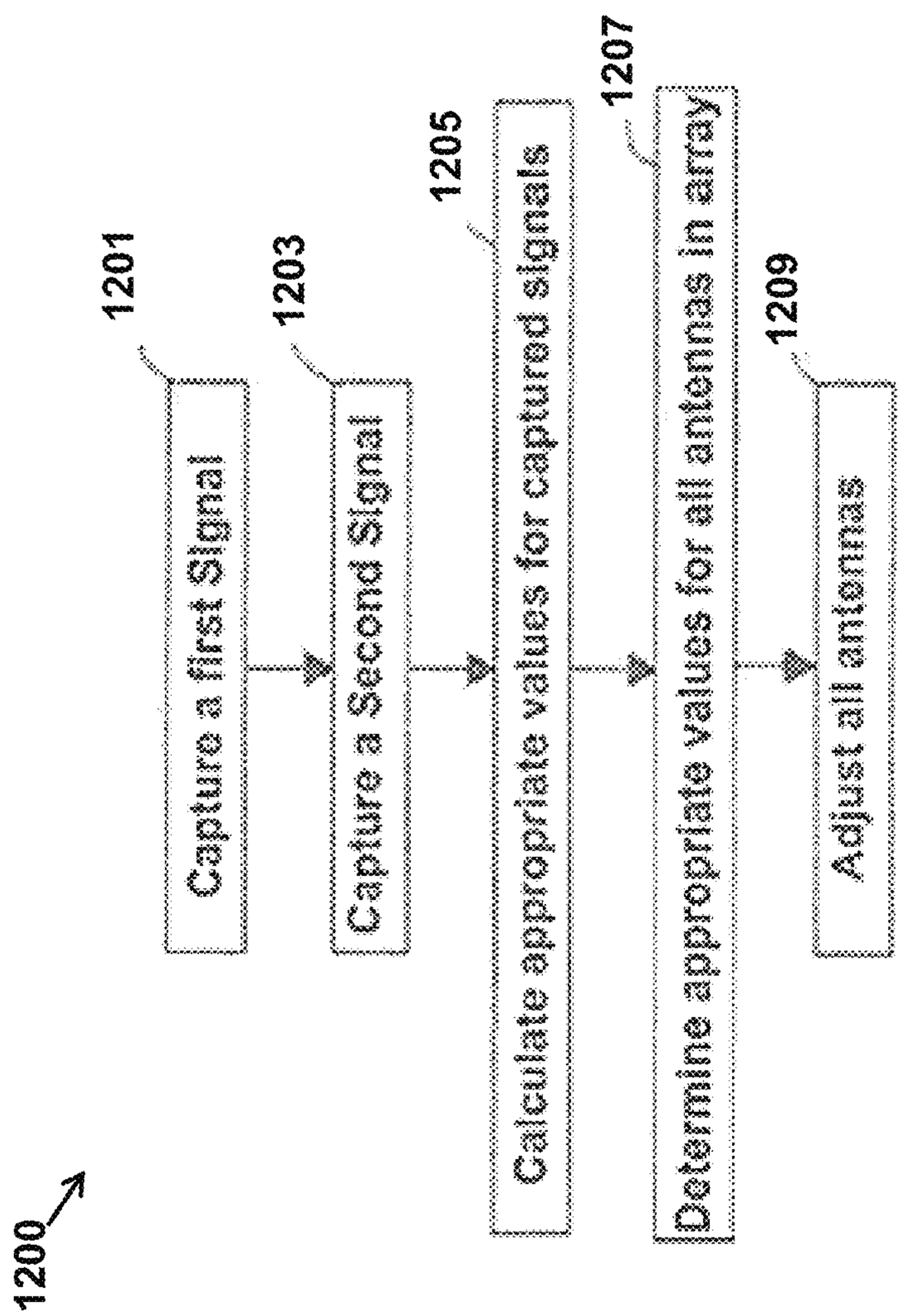
1200
1201
Capture a first Signal
1203
Capture a Second Signal
1205
Calculate appropriate values for captured signals
1207
Determine appropriate values for all antennas in array
1209
Adjust all antennas

FIG. 12

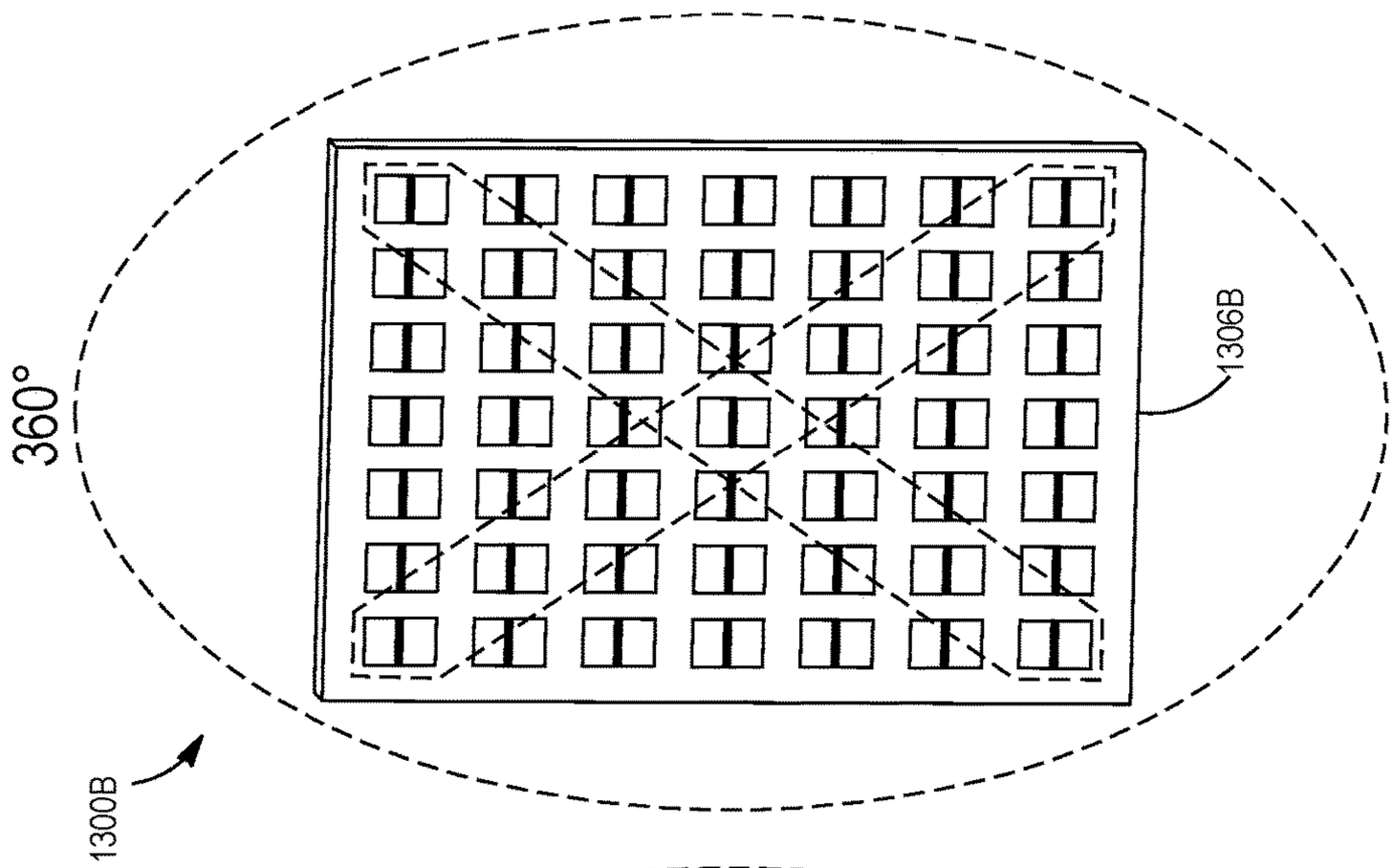

FIG. 13B

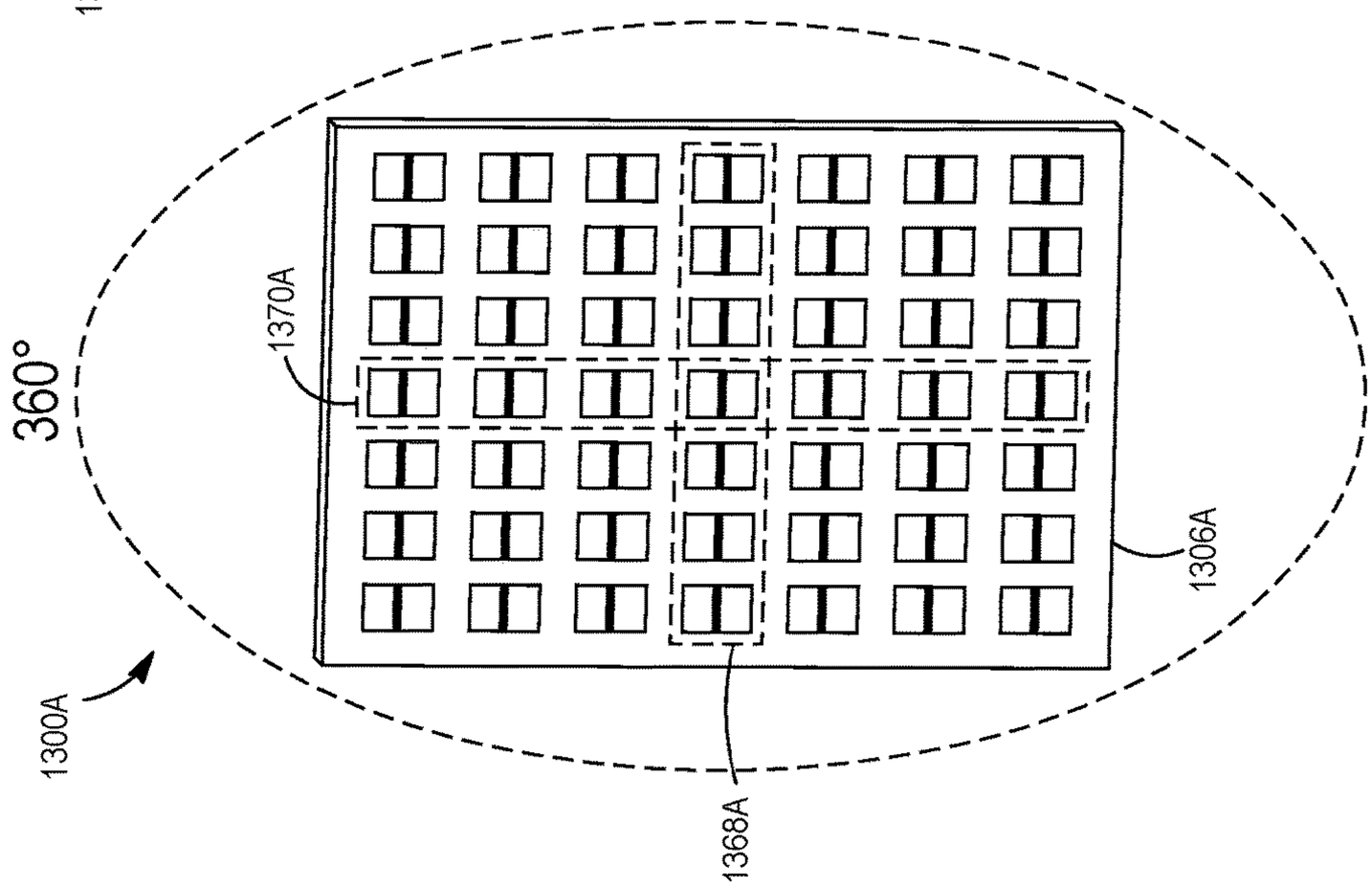

FIG. 13A

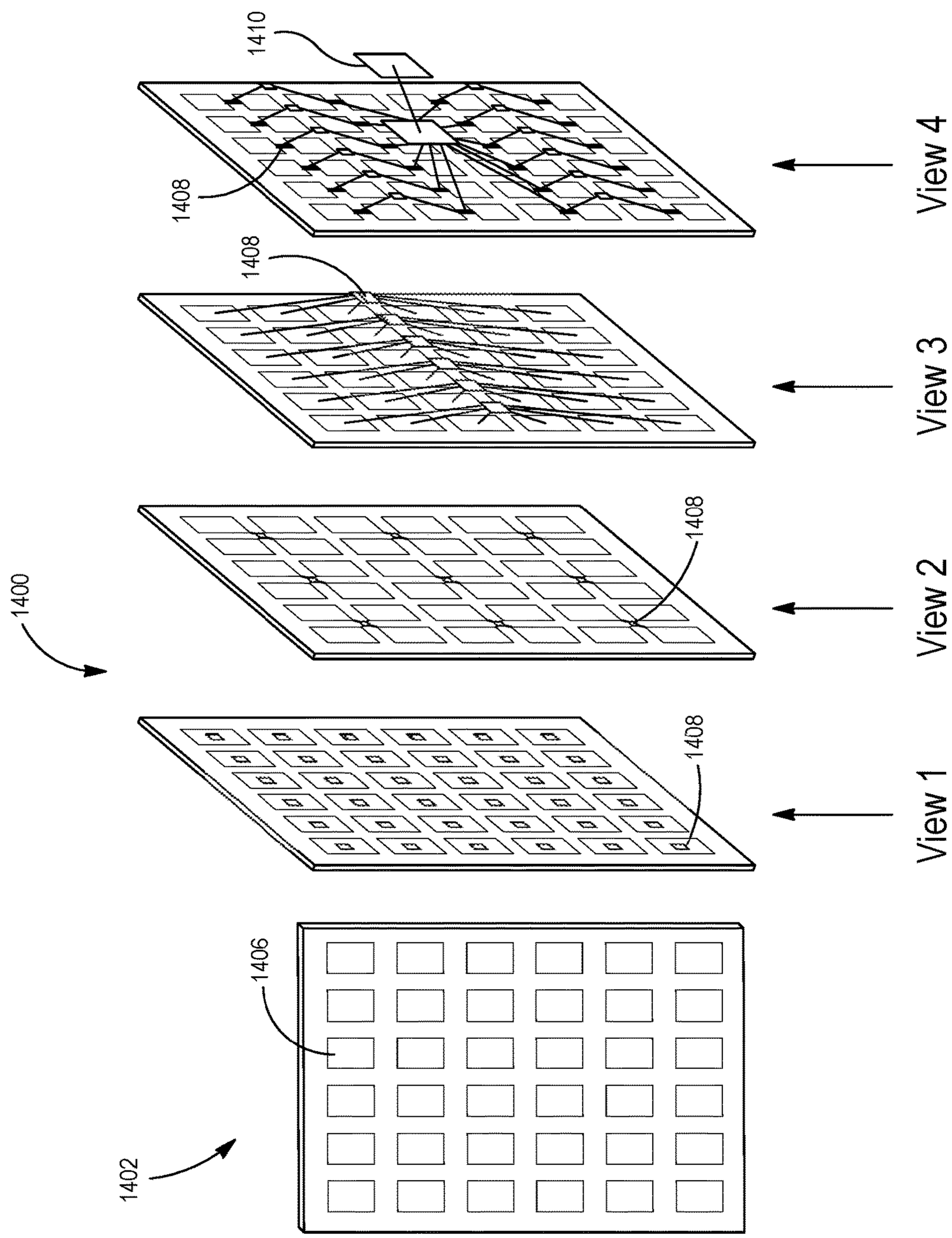

FIG. 14

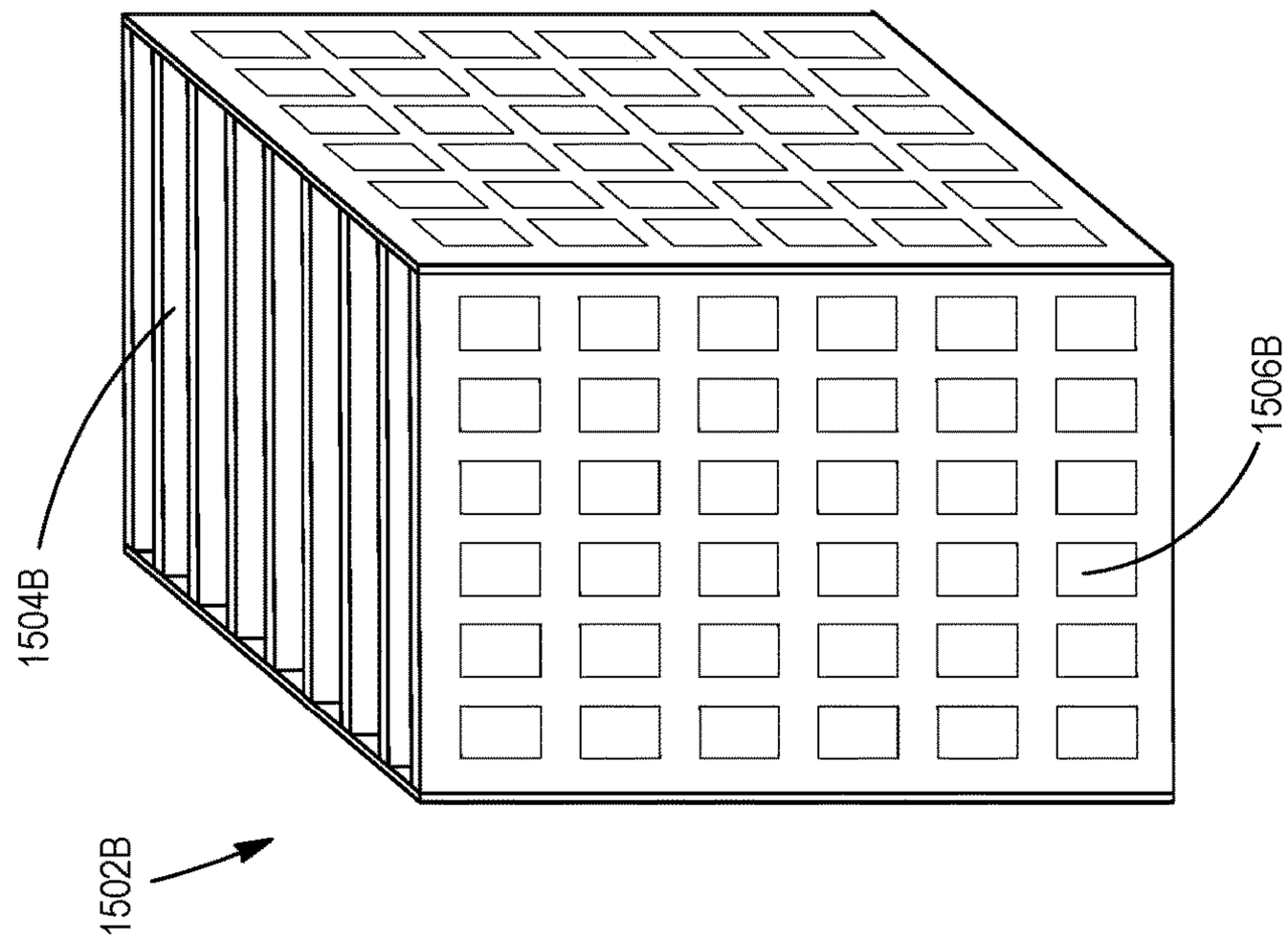

FIG. 15B

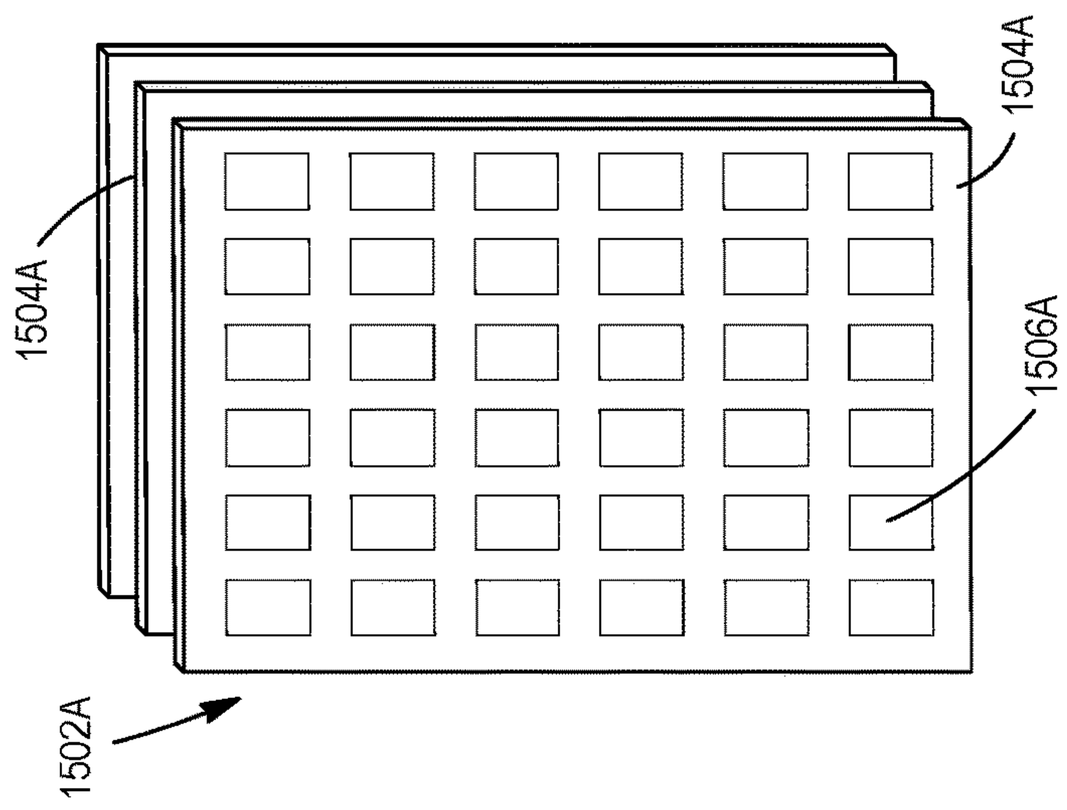

FIG. 15A

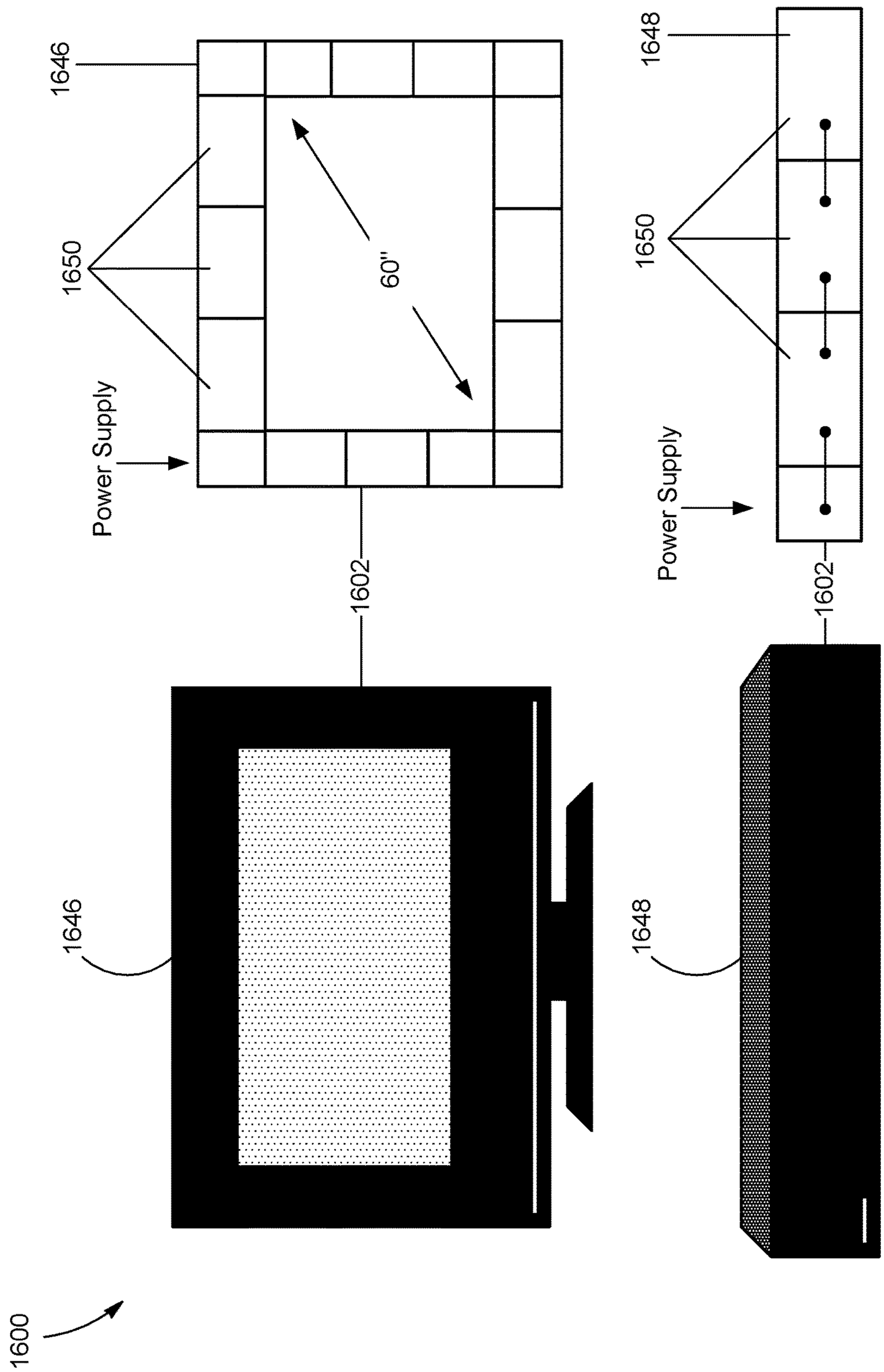
1646
1650
Power Supply
60"
1602
1646
1600
1648
1650
Power Supply
1602
1648

FIG. 16

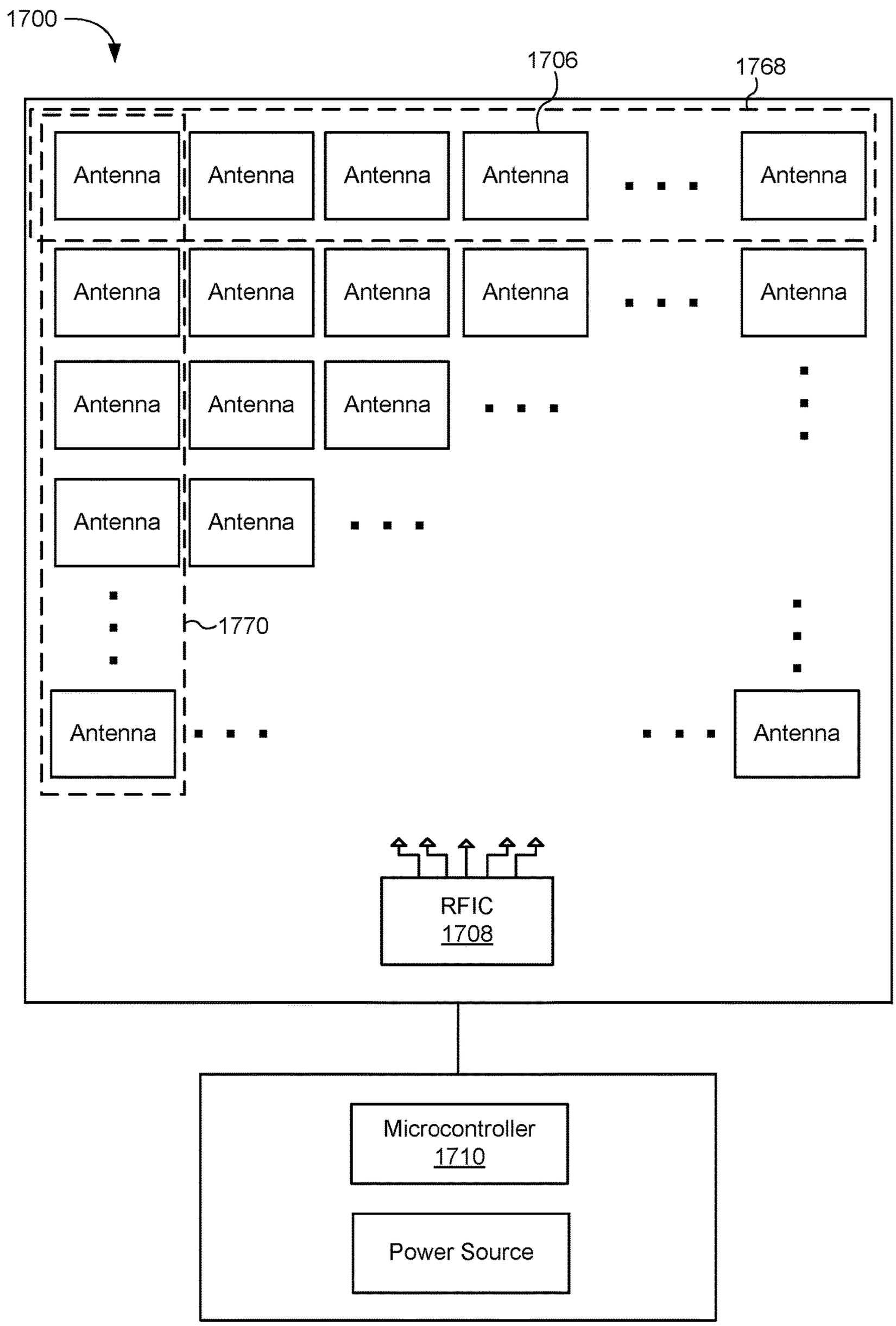
1700
1706
1768
Antenna
1770
RFIC
1708
Microcontroller
1710
Power Source

FIG. 17

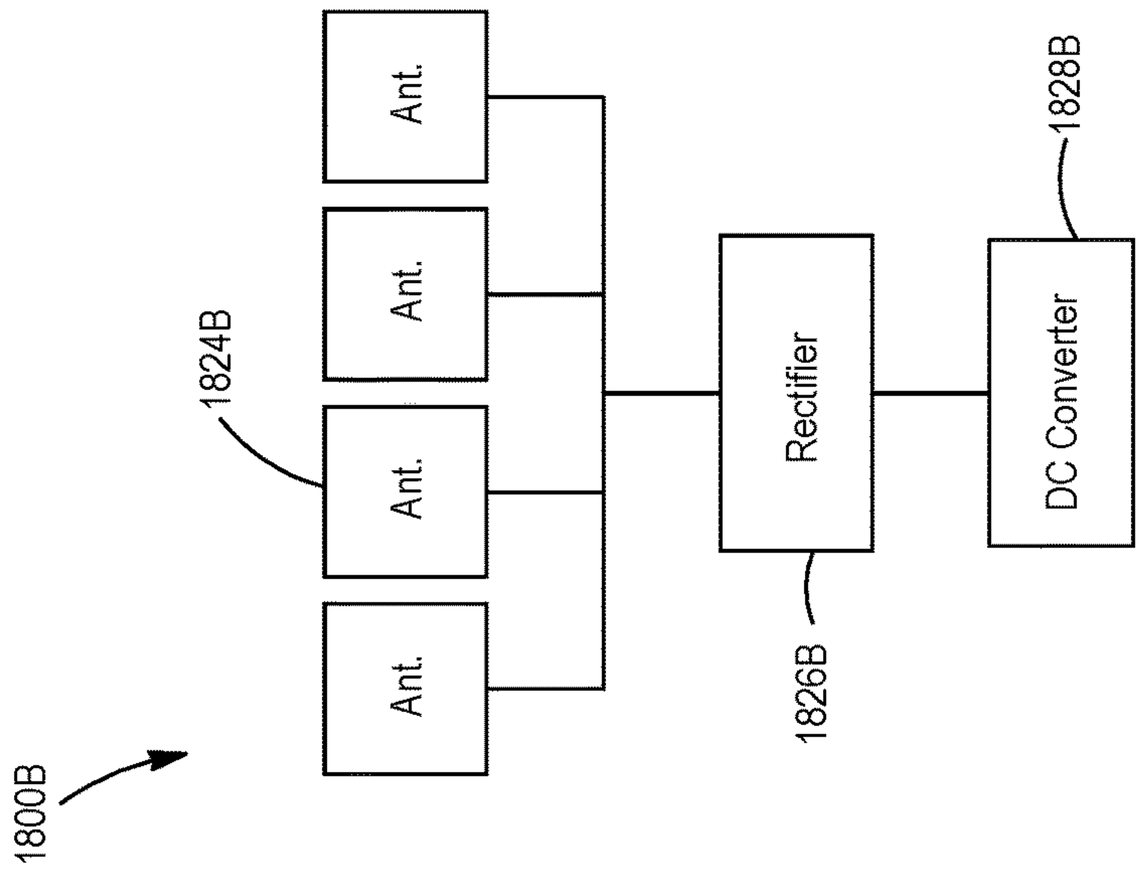

FIG. 18B

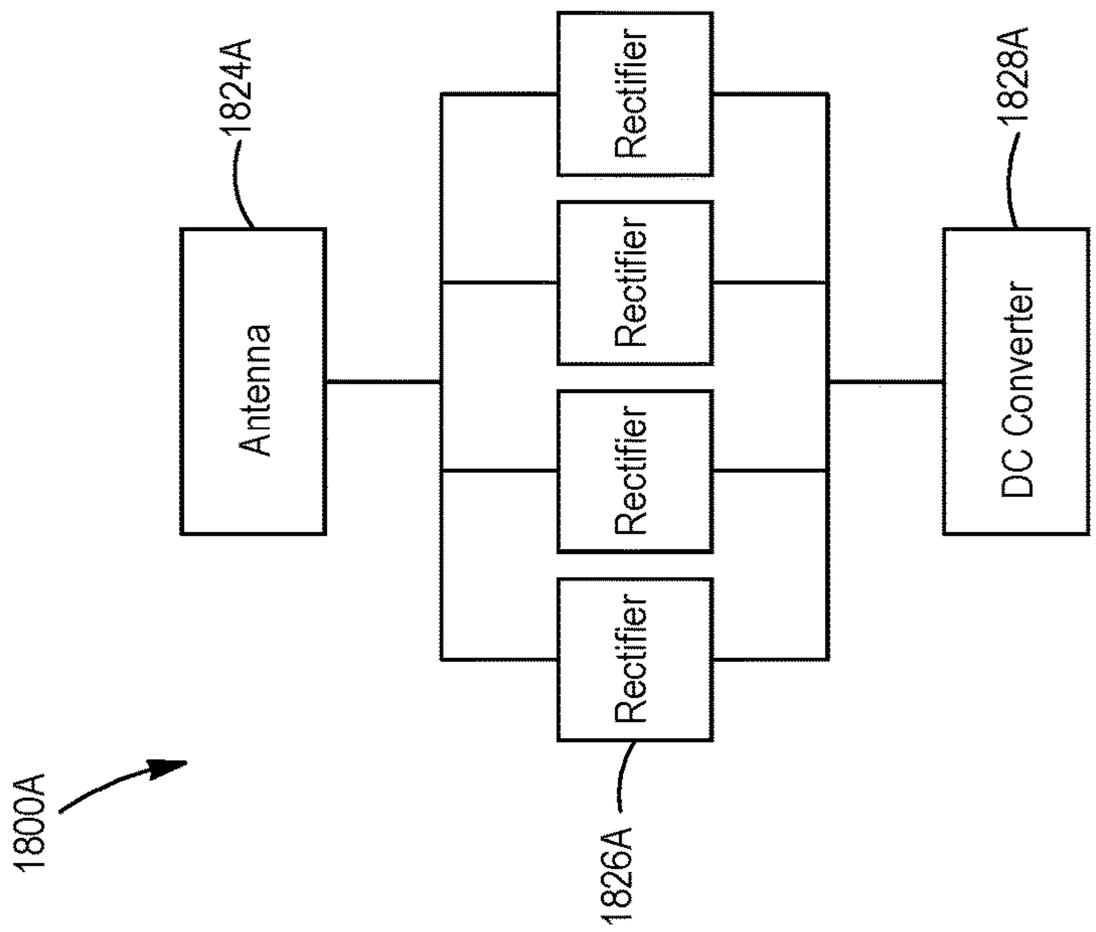

FIG. 18A

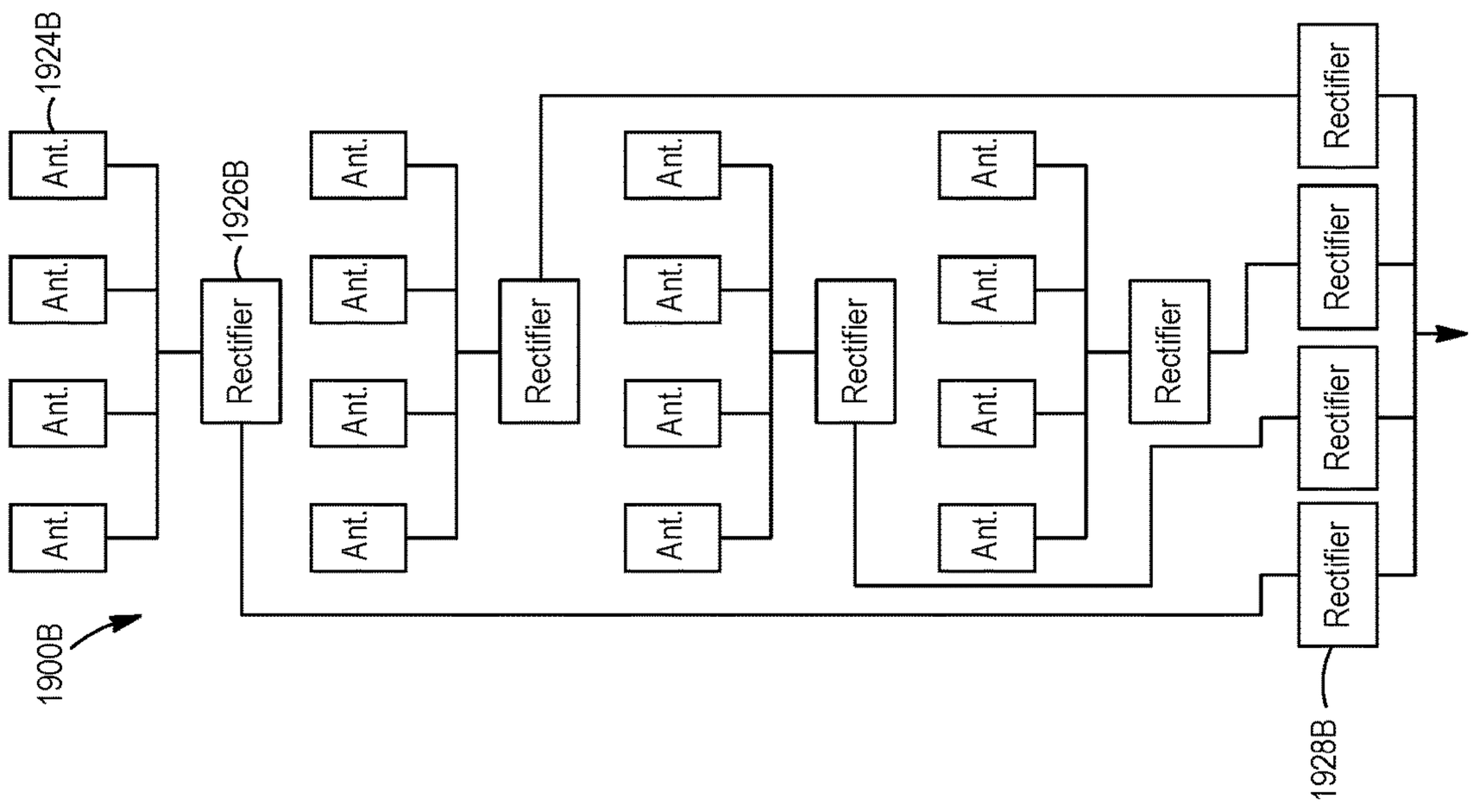

FIG. 19B

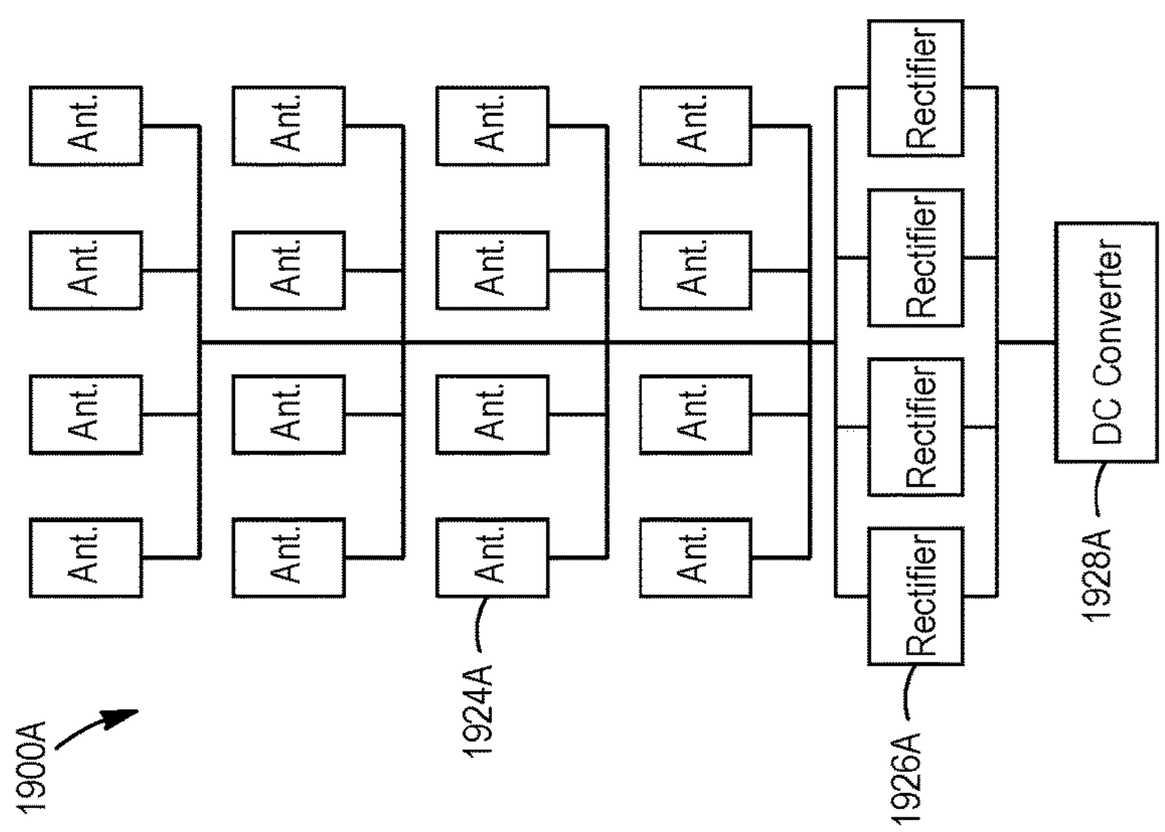

FIG. 19A

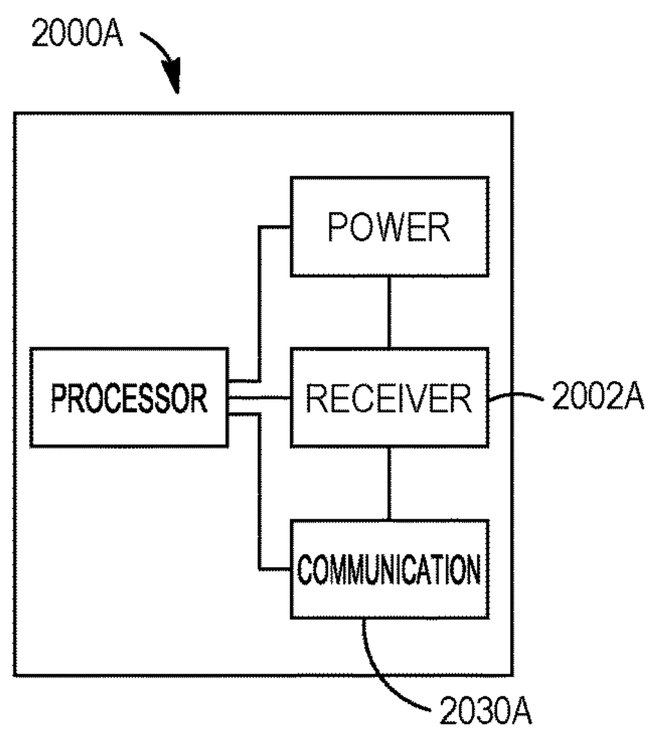

FIG. 20A

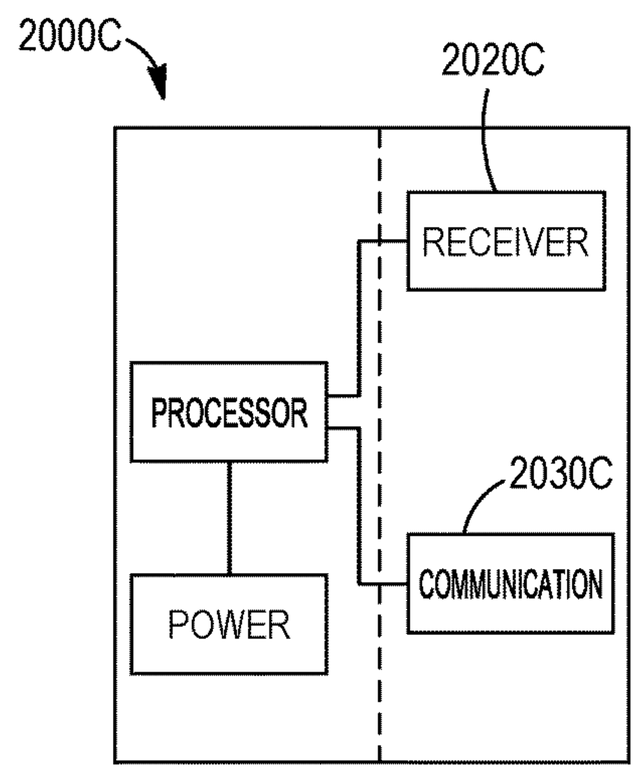

FIG. 20C

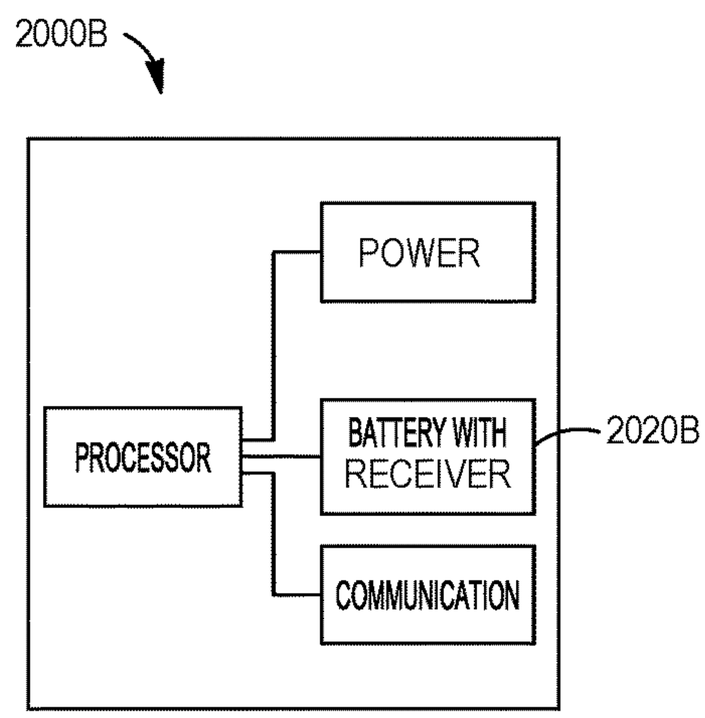

FIG. 20B

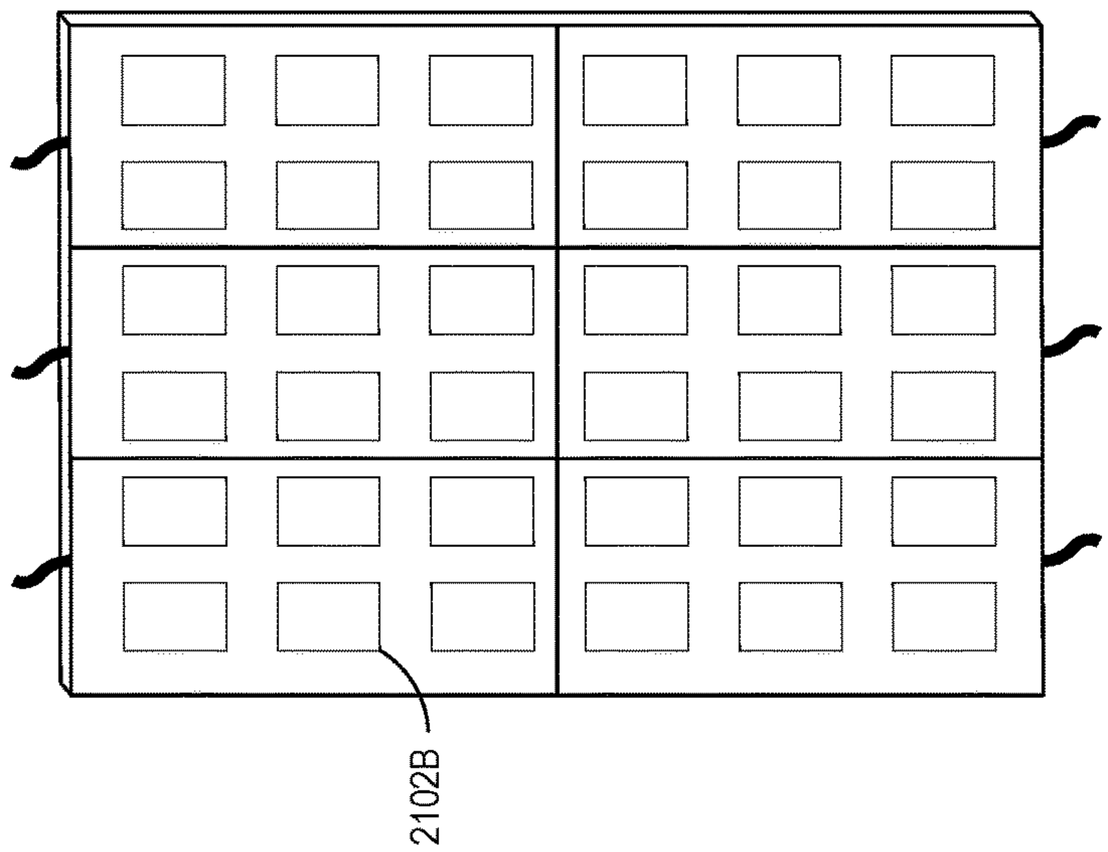

FIG. 21B

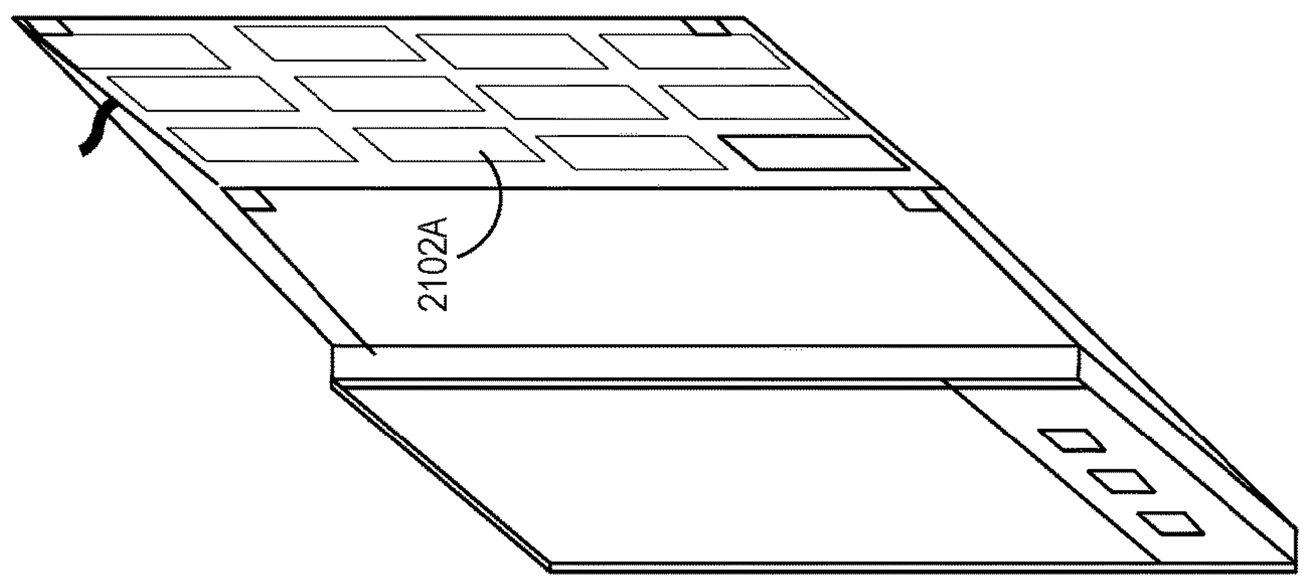

FIG. 21A

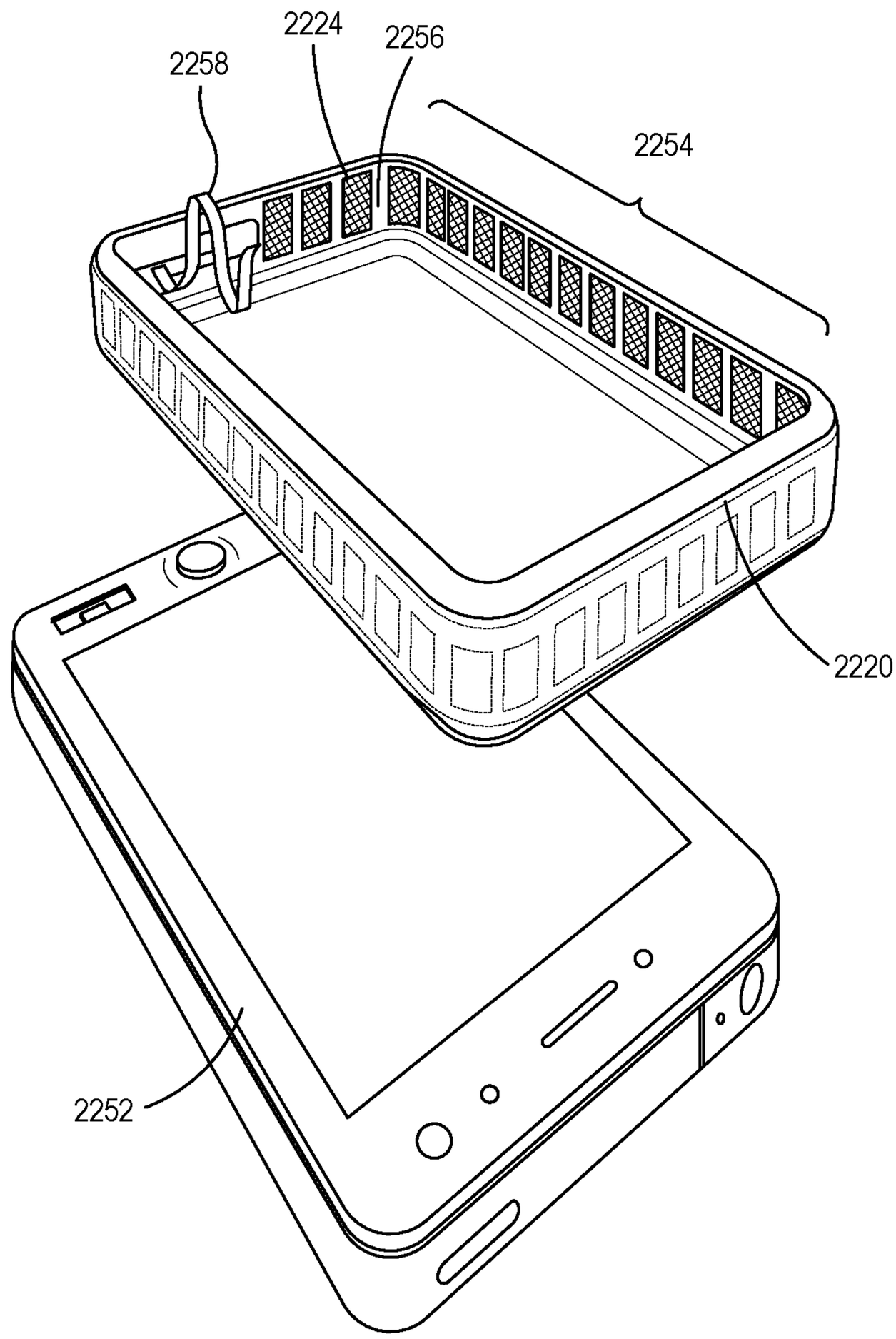

FIG. 22

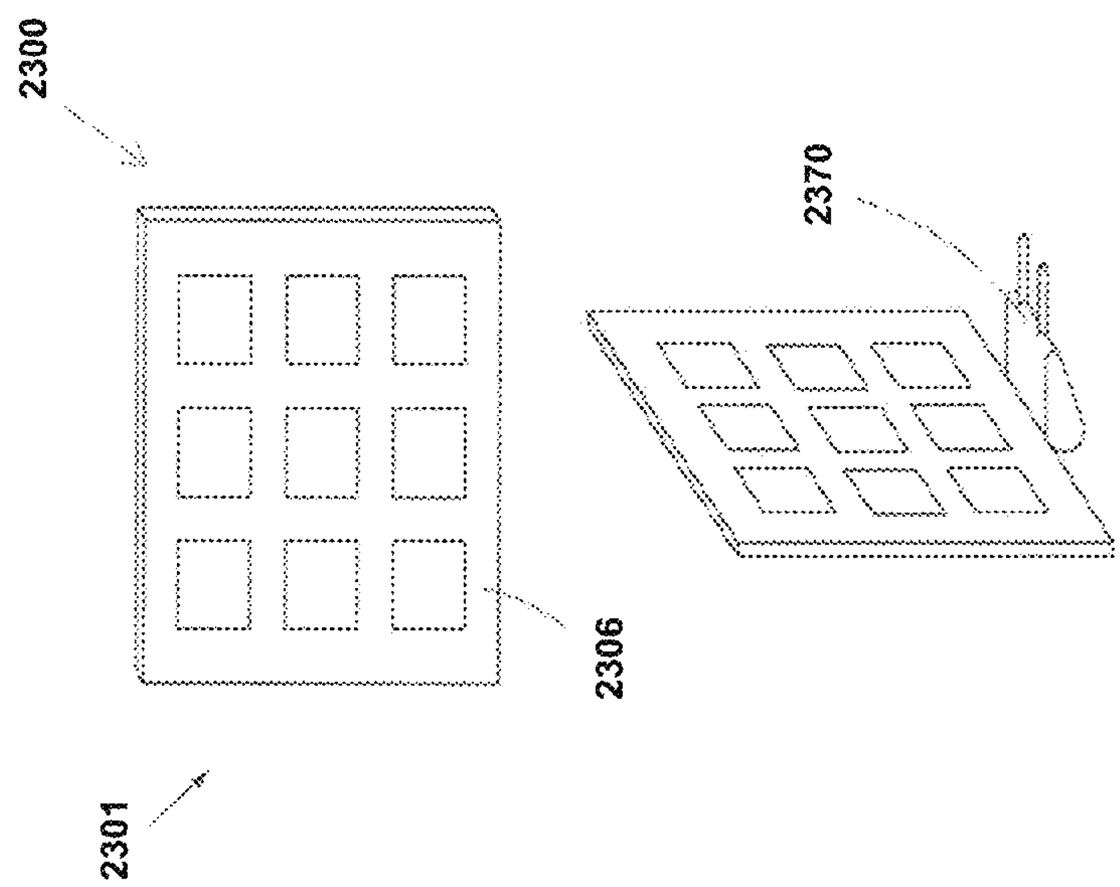

FIG. 23

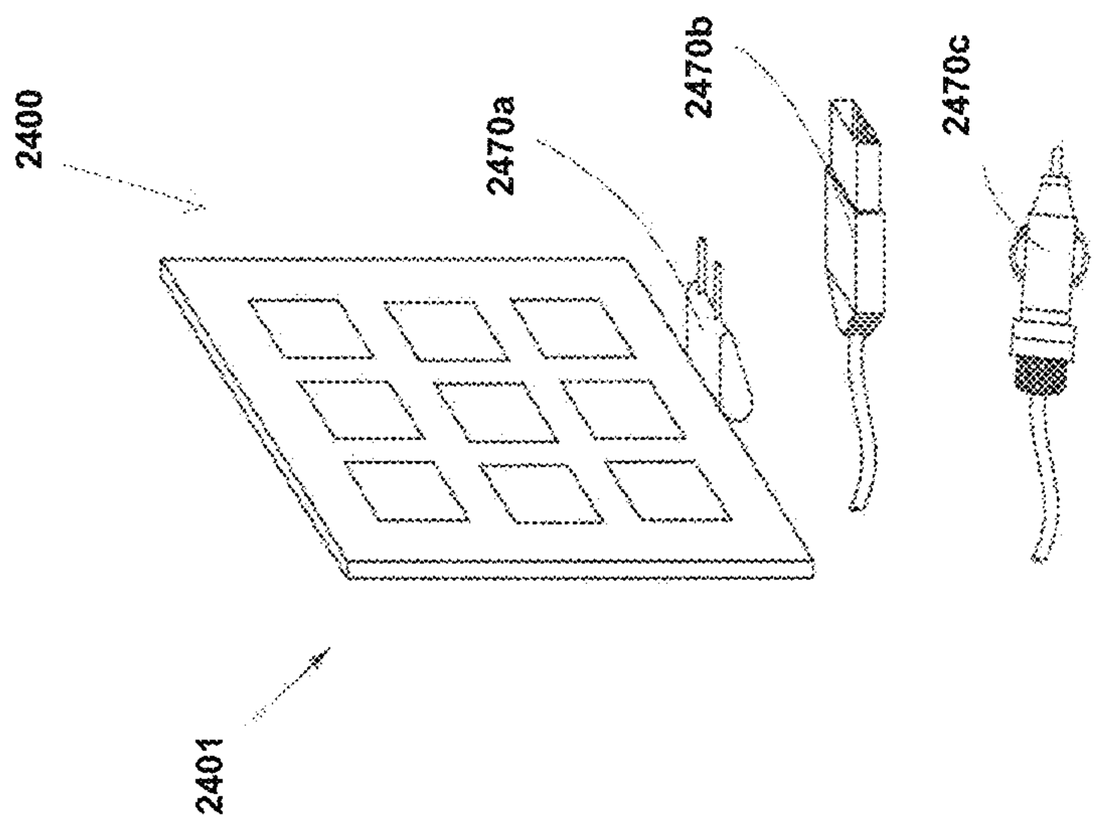

FIG. 24

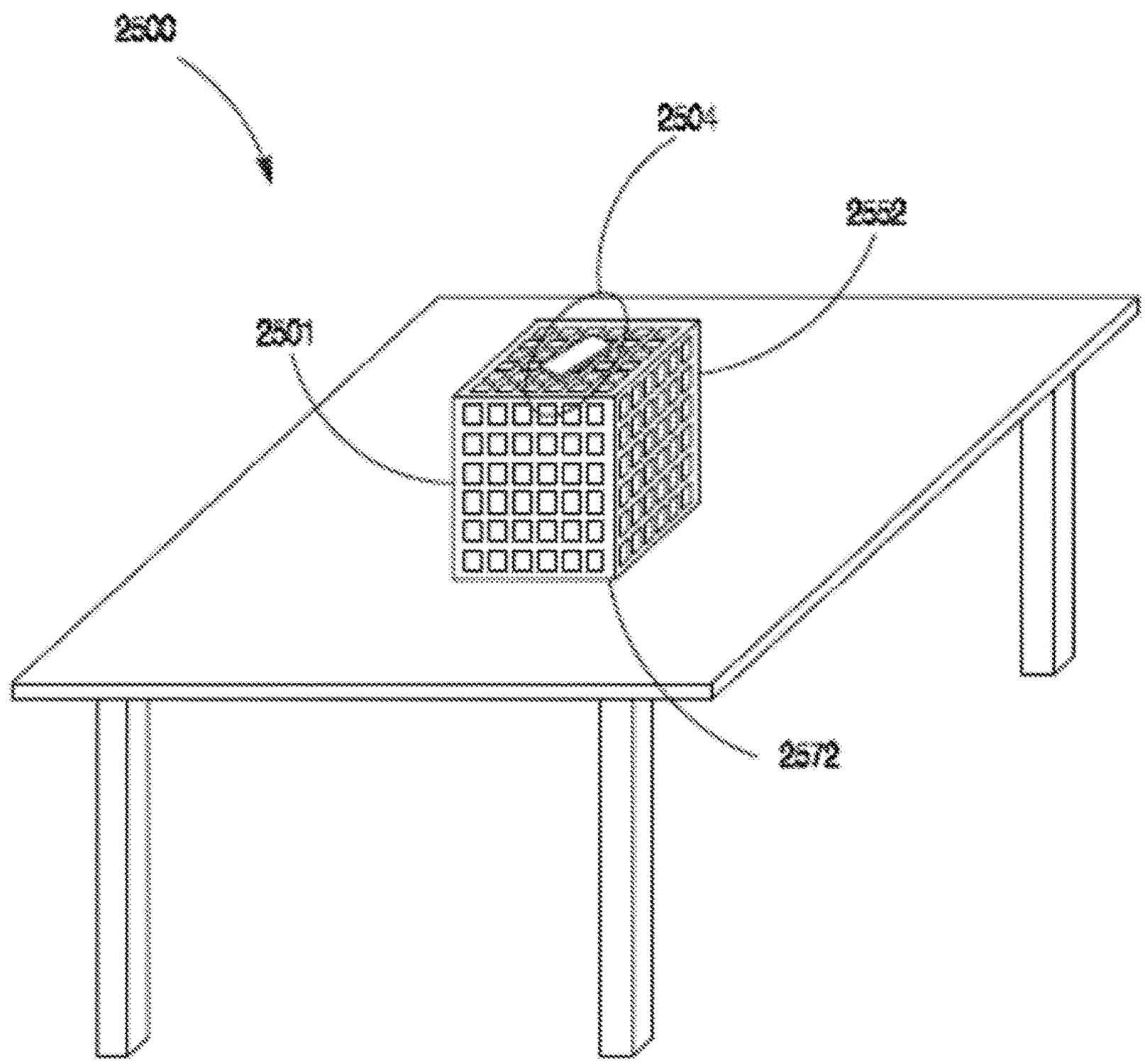

FIG. 25

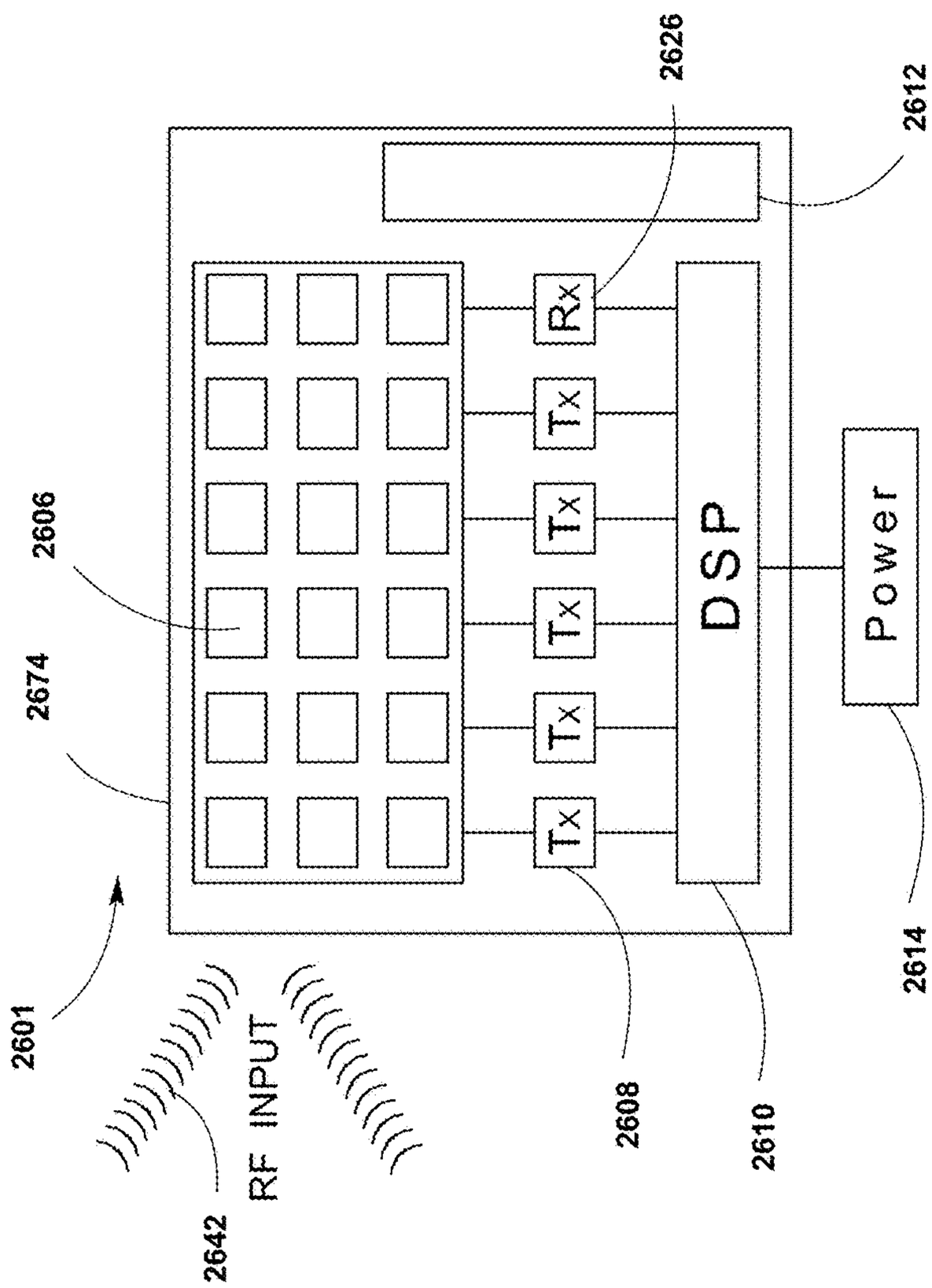
2626
2612
Rx
Tx
Tx
Tx
Tx
DSP
Power
2606
2674
2601
2642
RF INPUT
2608
2610
2614

FIG. 26

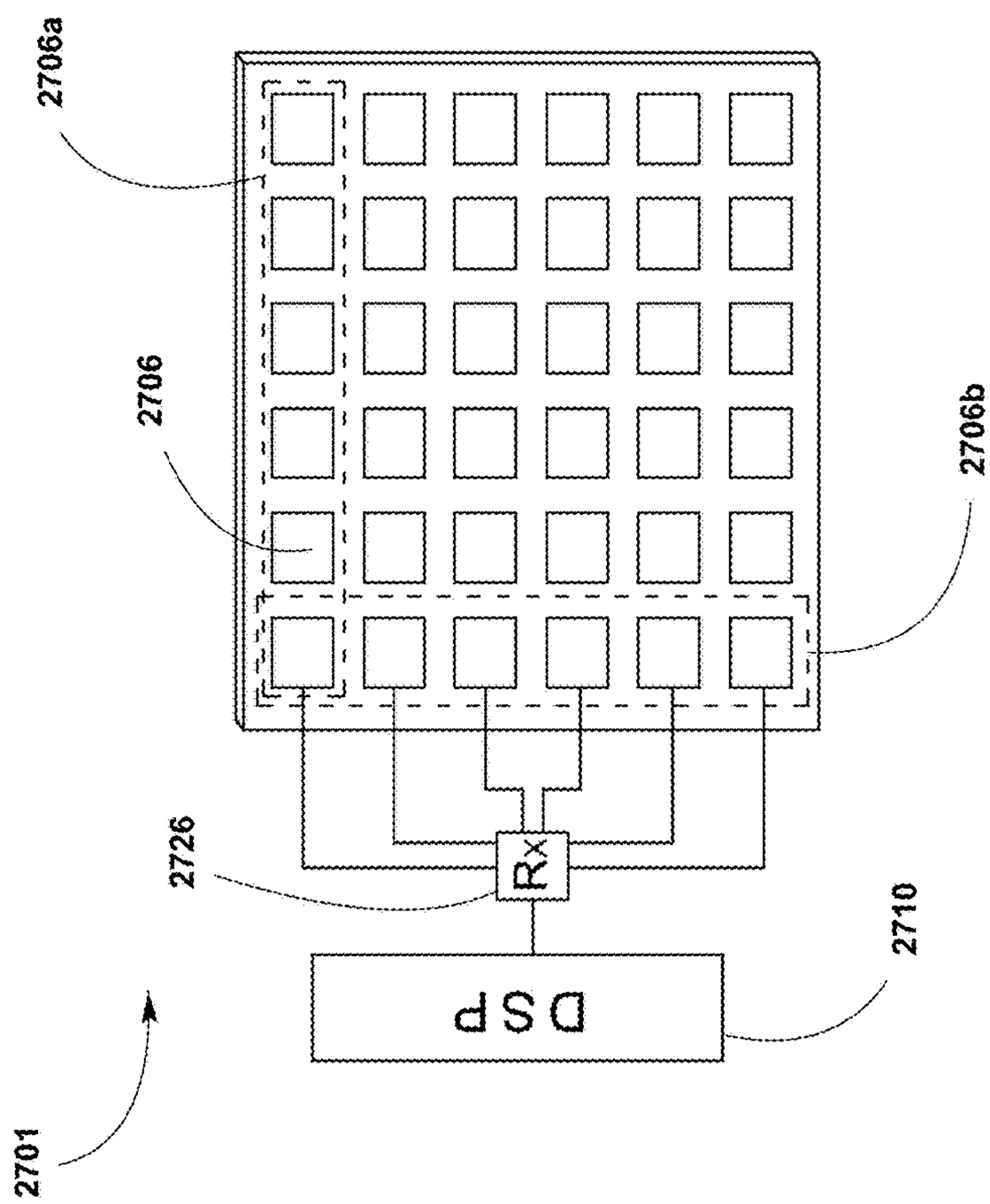

FIG. 27

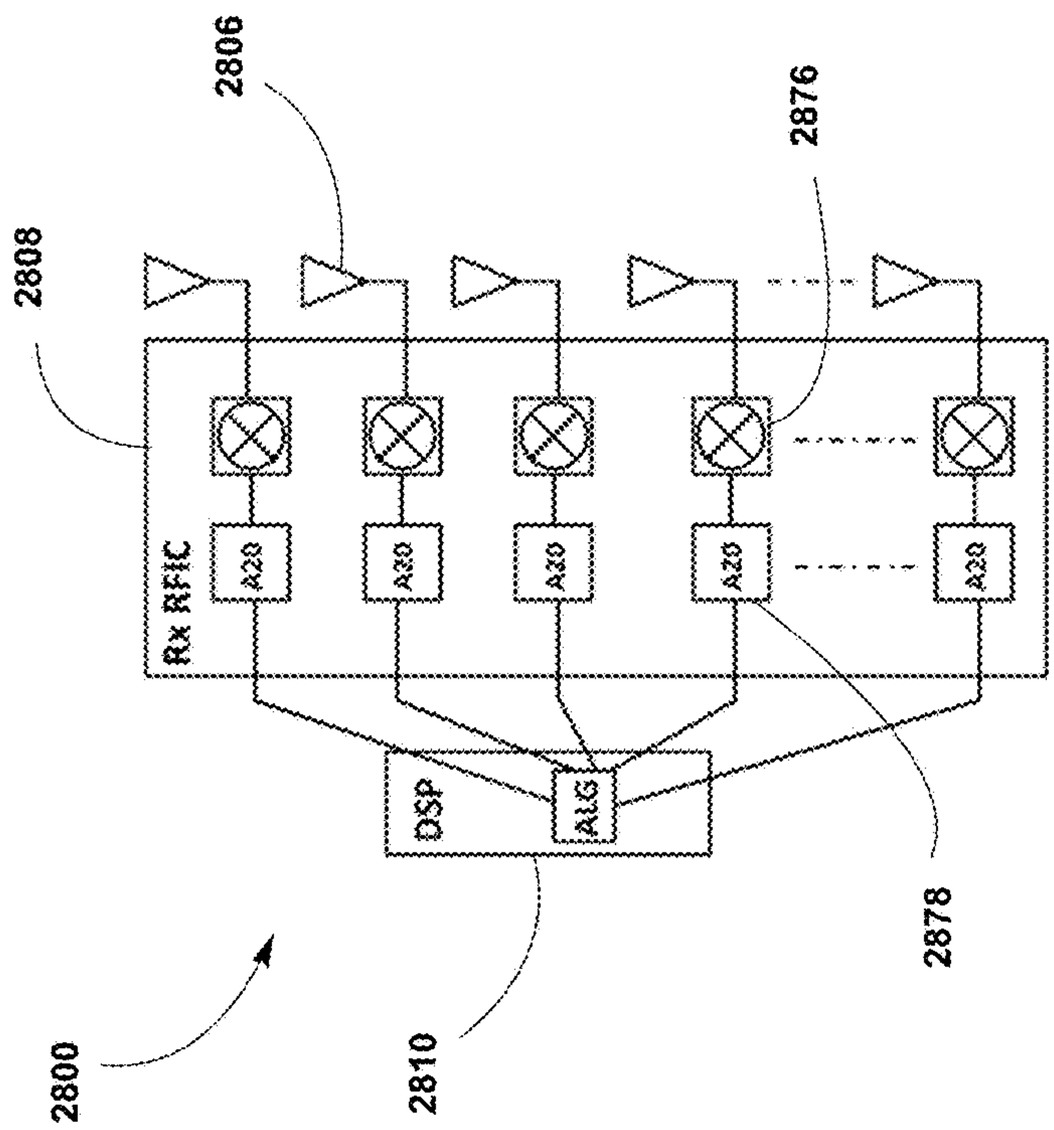
2806
2876
2808
Rx RFIC
A2D
A2D
A2D
A2D
A2D
DSP
ALG
2878
2800
2810

FIG. 28

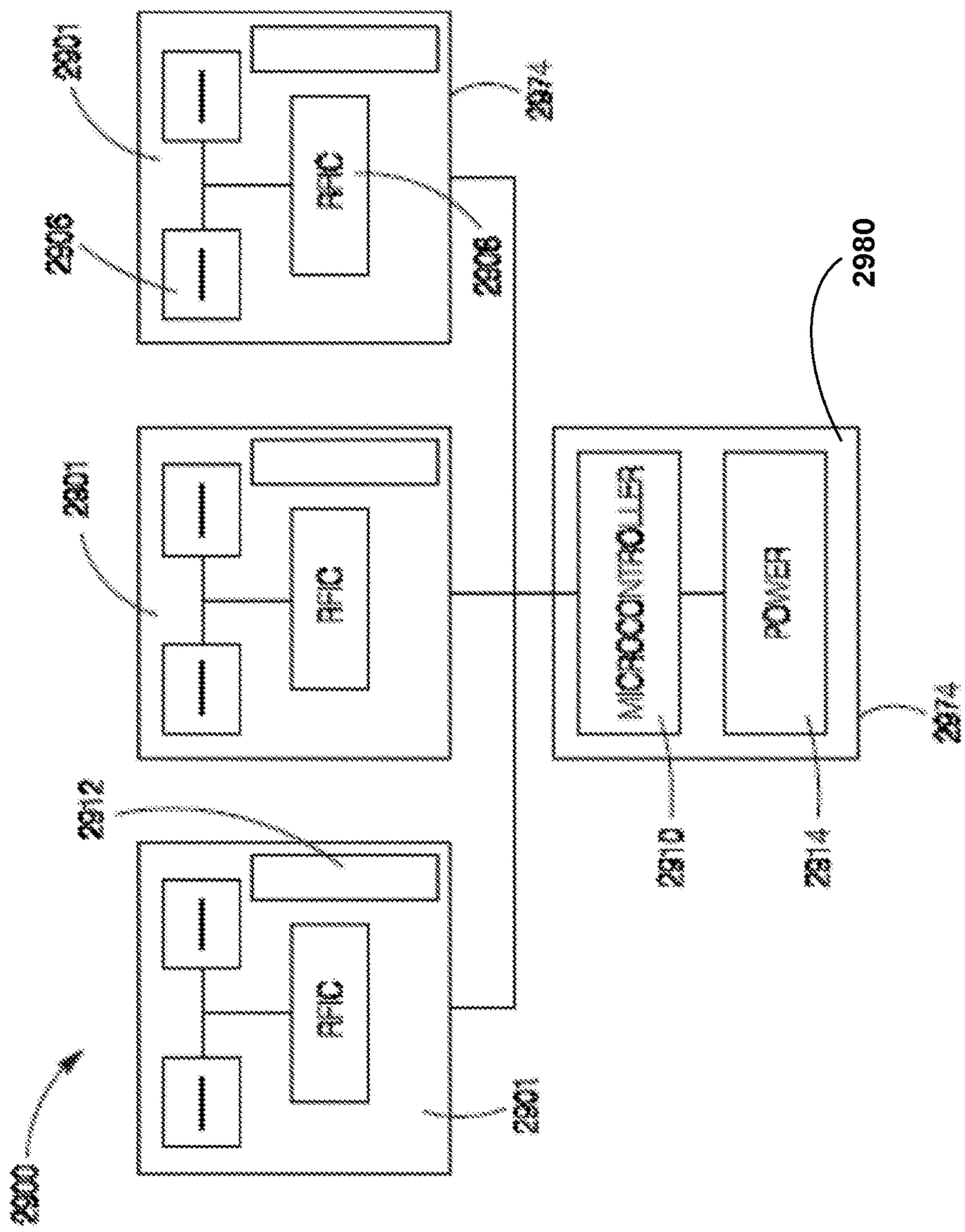
2980
2901
2906
RFID
2908
2974
2901
RFID
2912
RFID
2901
MICROCONTROLLER
POWER
2910
2914
2974

FIG. 29

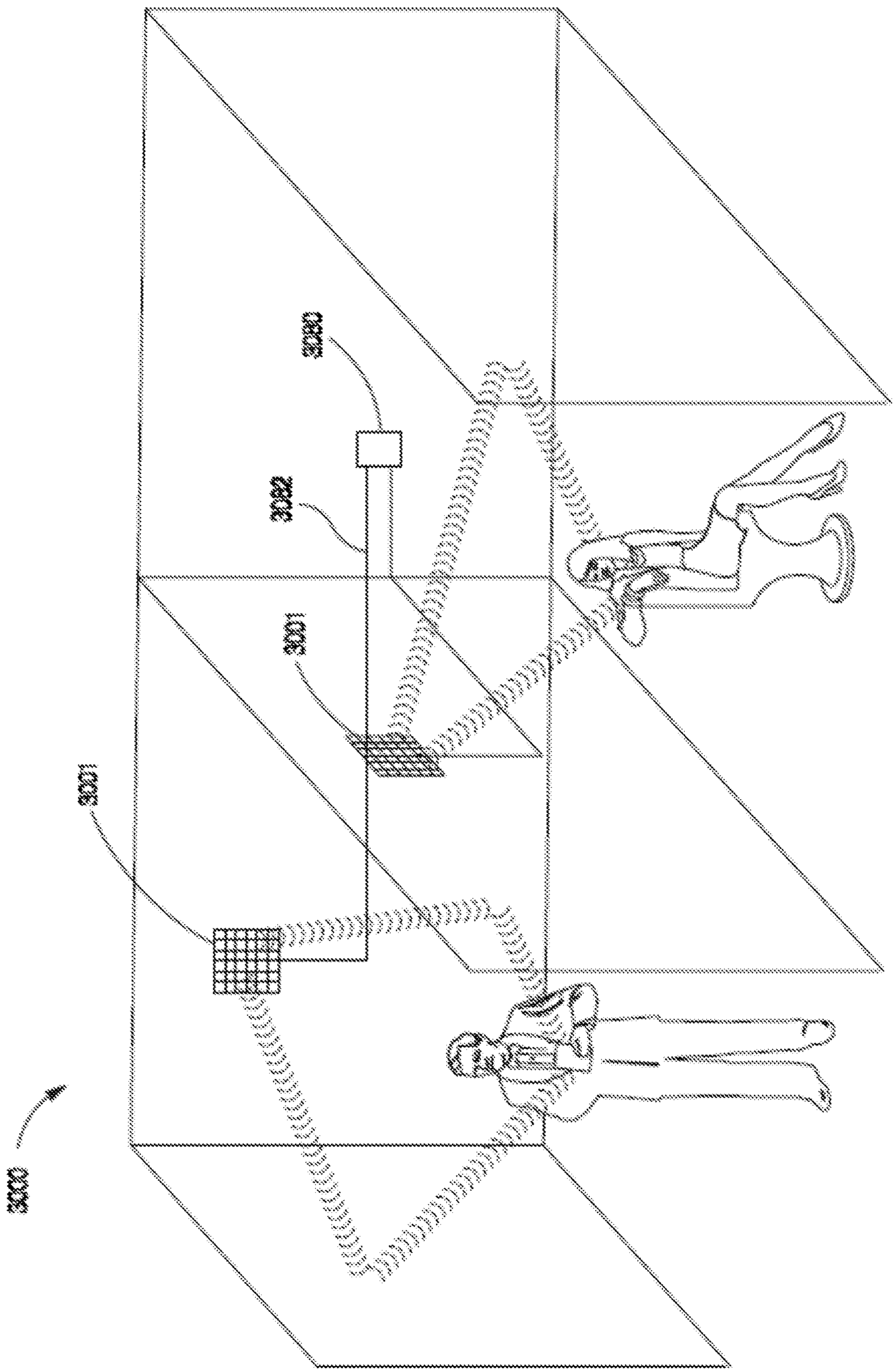

FIG. 30

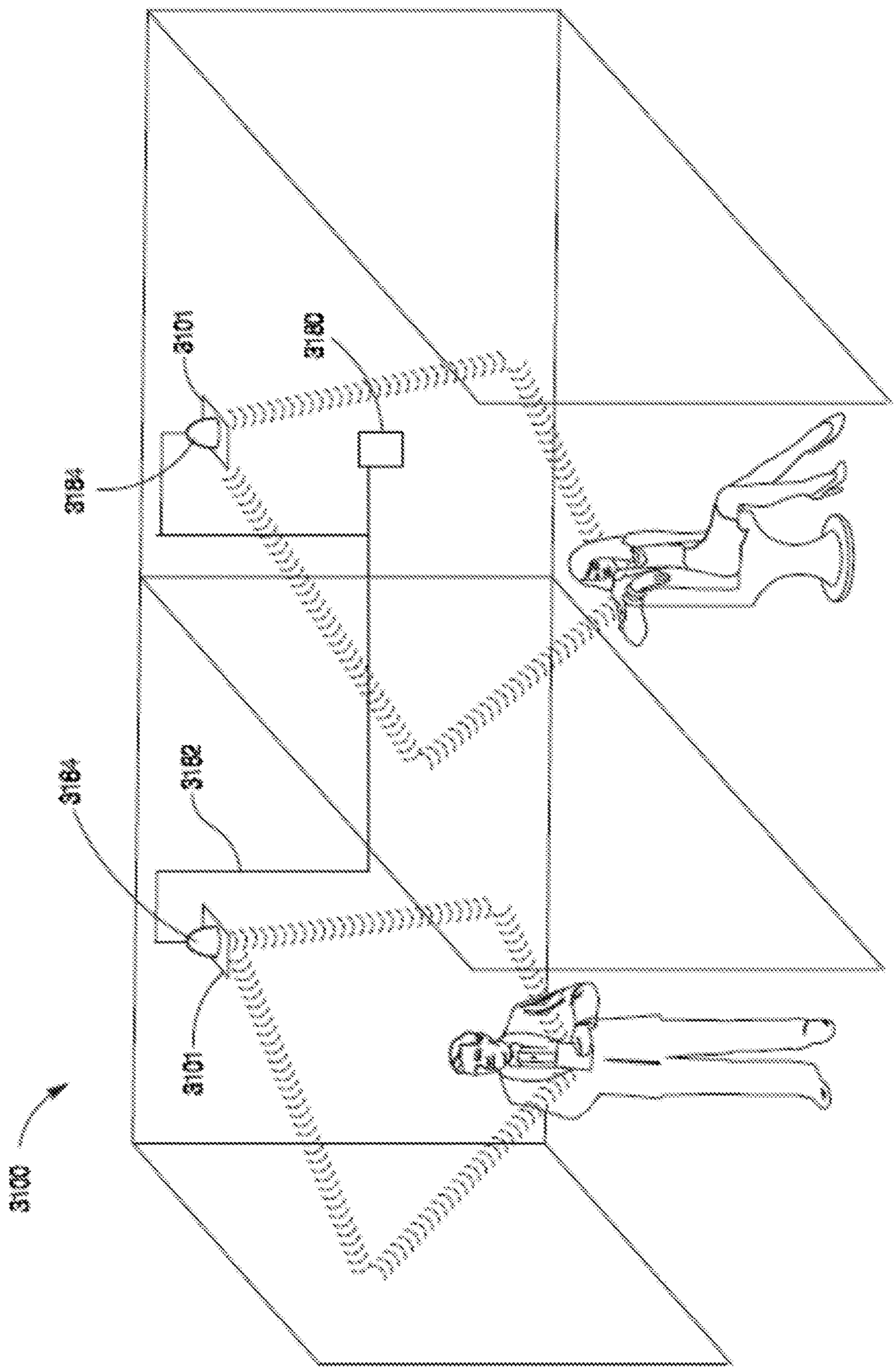

FIG. 31

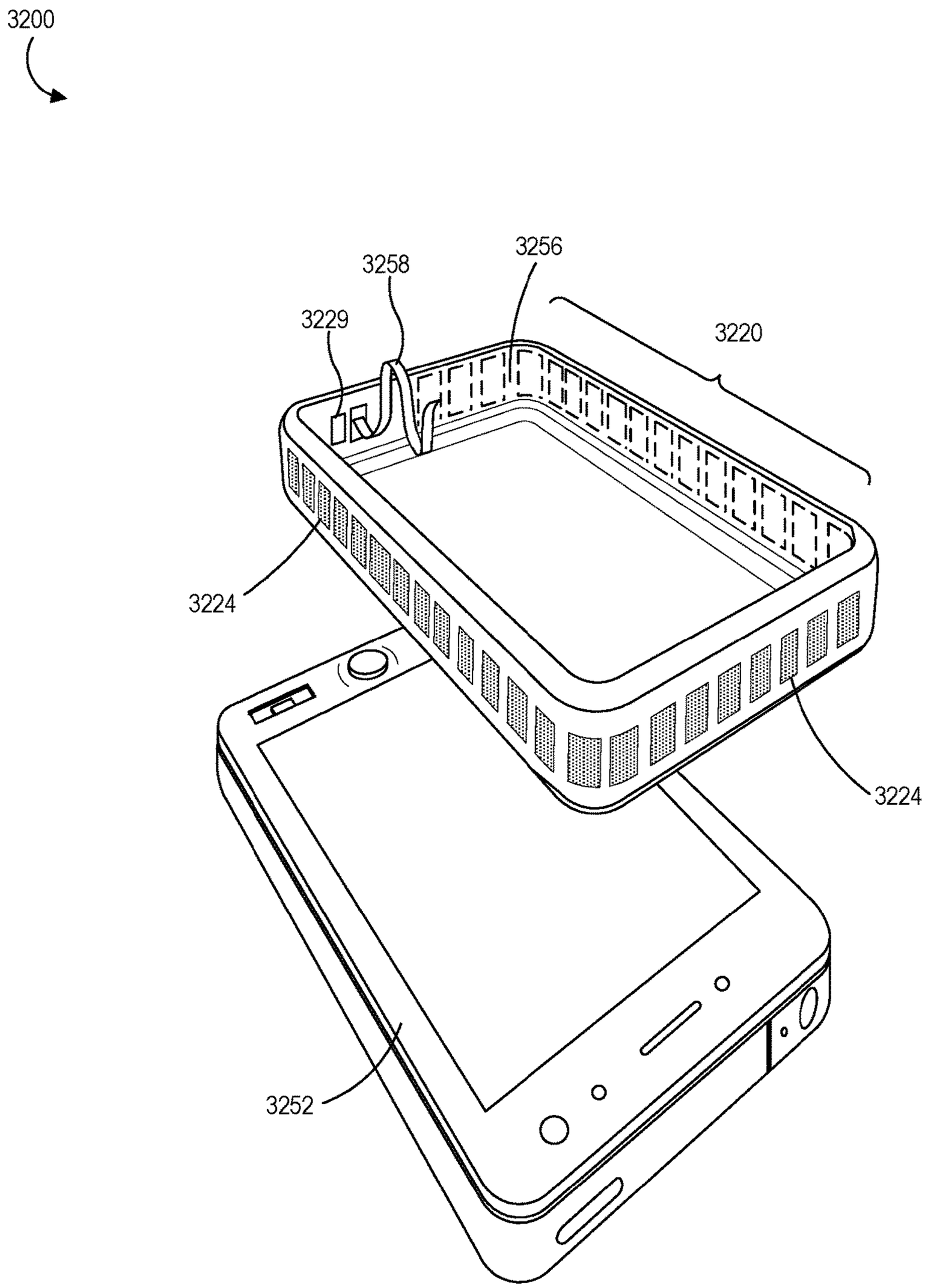

FIG. 32

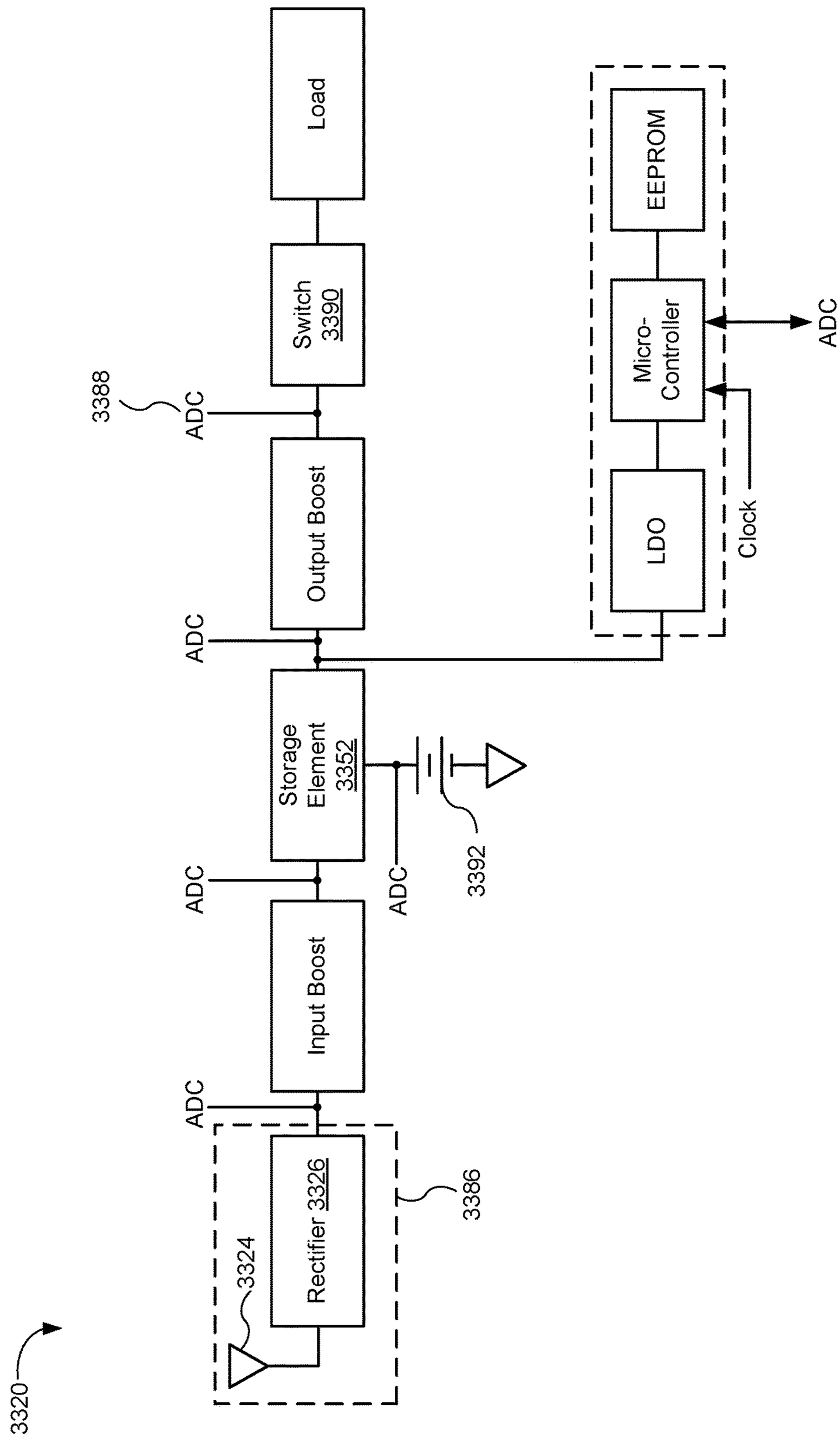
3320
3324
Rectifier 3326
3386
ADC
Input Boost
ADC
Storage Element 3352
ADC
3392
ADC
Output Boost
ADC
3388
Switch 3390
Load
LDO
Micro-controller
EEPROM
ADC
Clock

FIG. 33

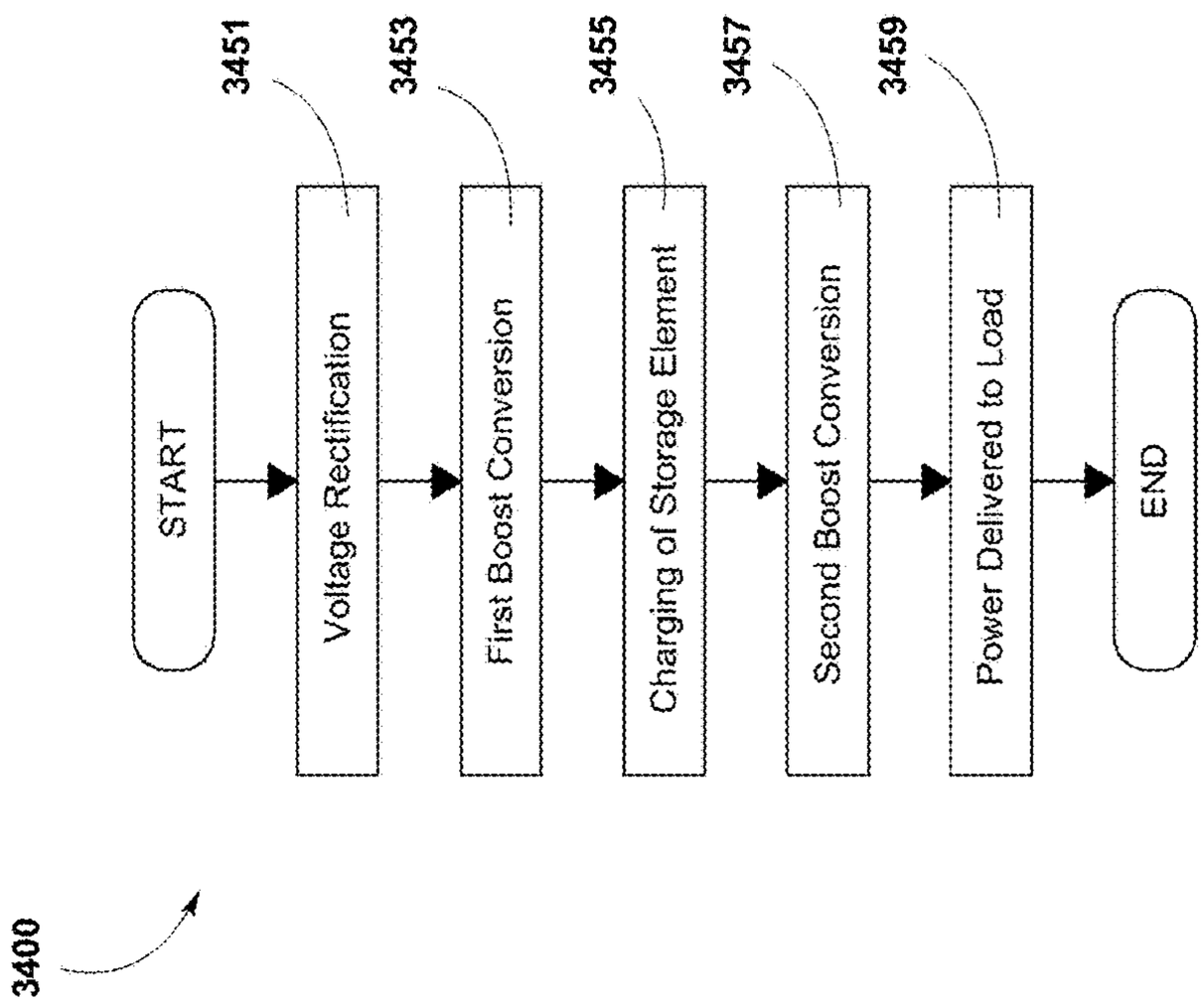
3400
START
Voltage Rectification
3451
First Boost Conversion
3453
Charging of Storage Element
3455
Second Boost Conversion
3457
Power Delivered to Load
3459
END

FIG. 34

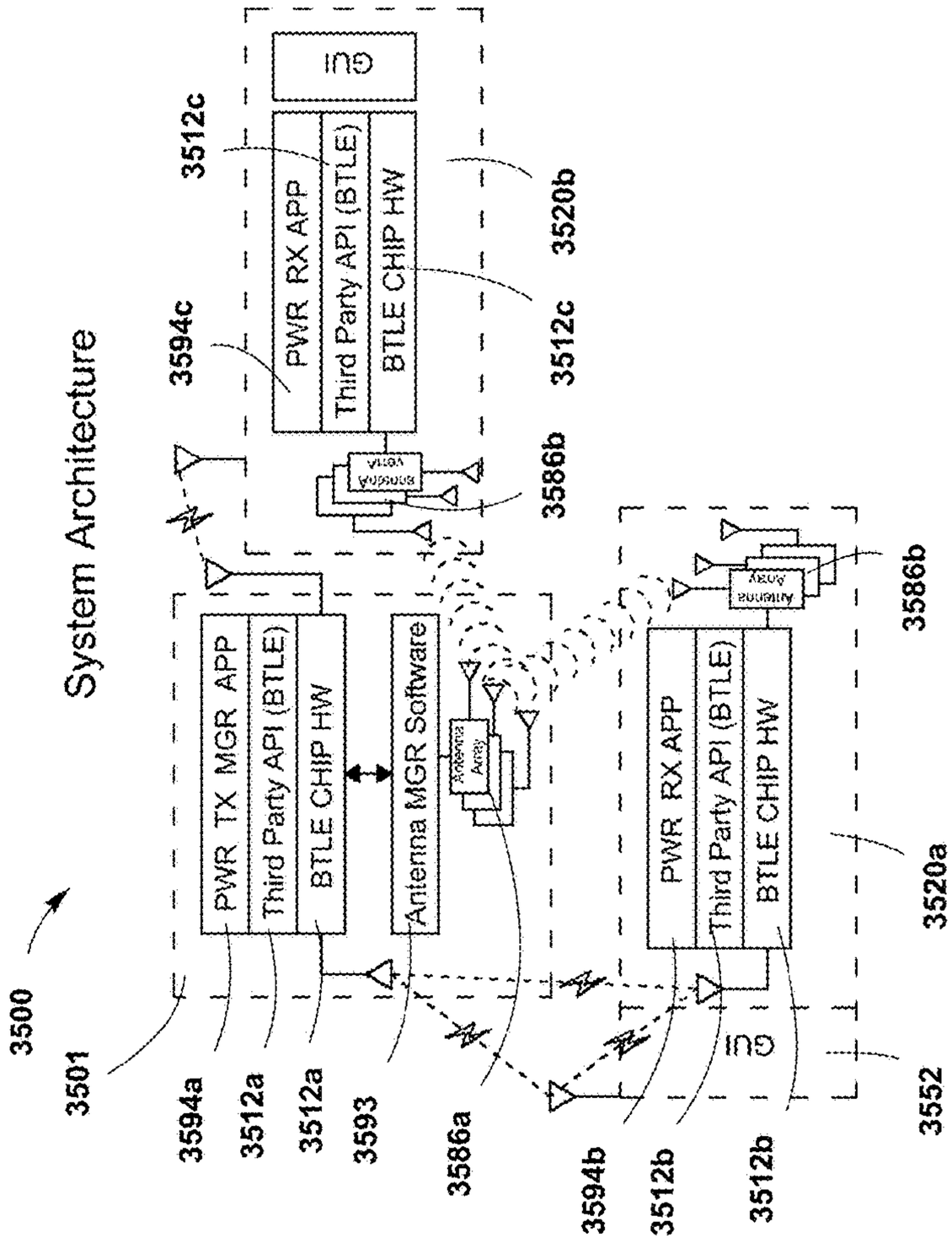
System Architecture
3500
3501
PWR TX MGR APP
Third Party API (BTLE)
BTLE CHIP HW
Antenna MGR Software
Antenna Array
3594a
3512a
3512a
3593
3586a
3594b
3512b
3512b
3552
PWR RX APP
Third Party API (BTLE)
BTLE CHIP HW
3520a
3586b
GUI
3594c
3512c
3512c
3520b
3586b
GUI

FIG. 35

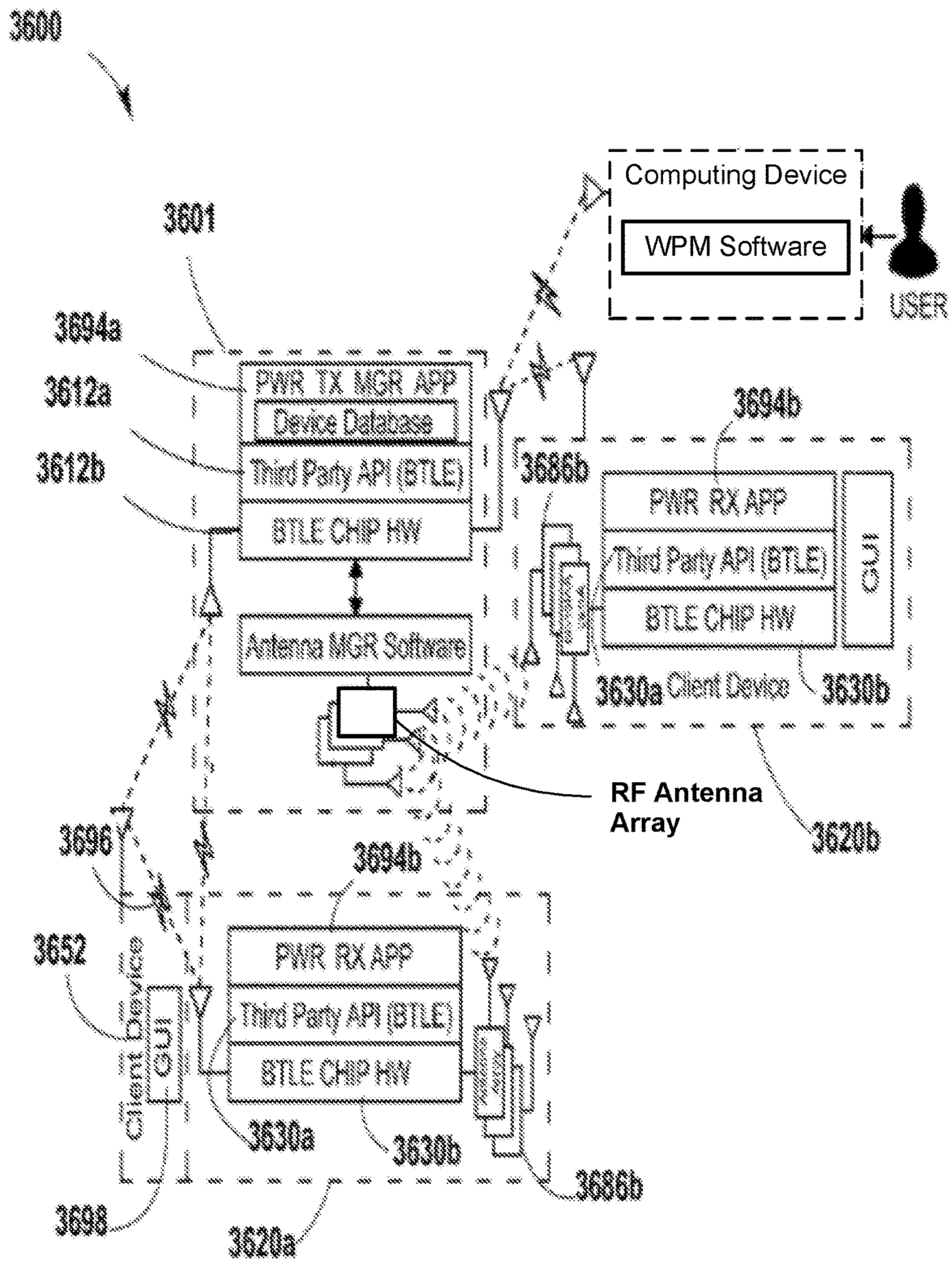
3600
Computing Device
WPM Software
USER
3601
3694a
3612a
3612b
PWR TX MGR APP
Device Database
Third Party API (BTLE)
BTLE CHIP HW
Antenna MGR Software
3694b
3686b
PWR RX APP
Third Party API (BTLE)
BTLE CHIP HW
GUI
3630a Client Device
3630b
RF Antenna Array
3620b
3696
3694b
3652
PWR RX APP
Third Party API (BTLE)
BTLE CHIP HW
GUI
Client Device
3630a
3630b
3686b
3698
3620a

FIG. 36

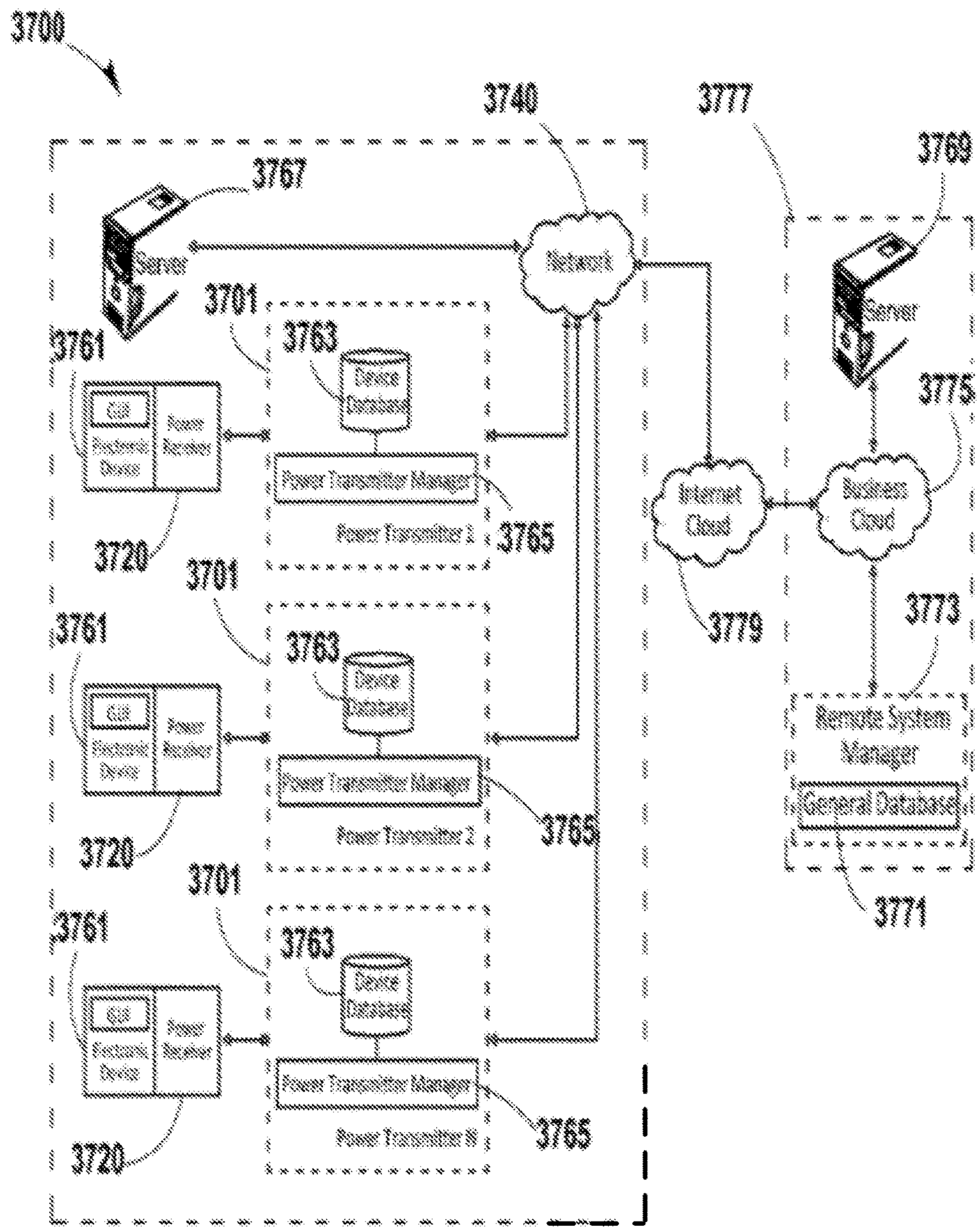
3700
3740
3777
3767
3769
Server
Network
Server
3701
3763
3761
Power Transmitter Manager
Power Transmitter 1
3765
3720
3775
Internet Cloud
Internet Cloud
3779
3773
Remote System Manager
General Database
3771
Power Transmitter 2
Power Transmitter 3

FIG. 37

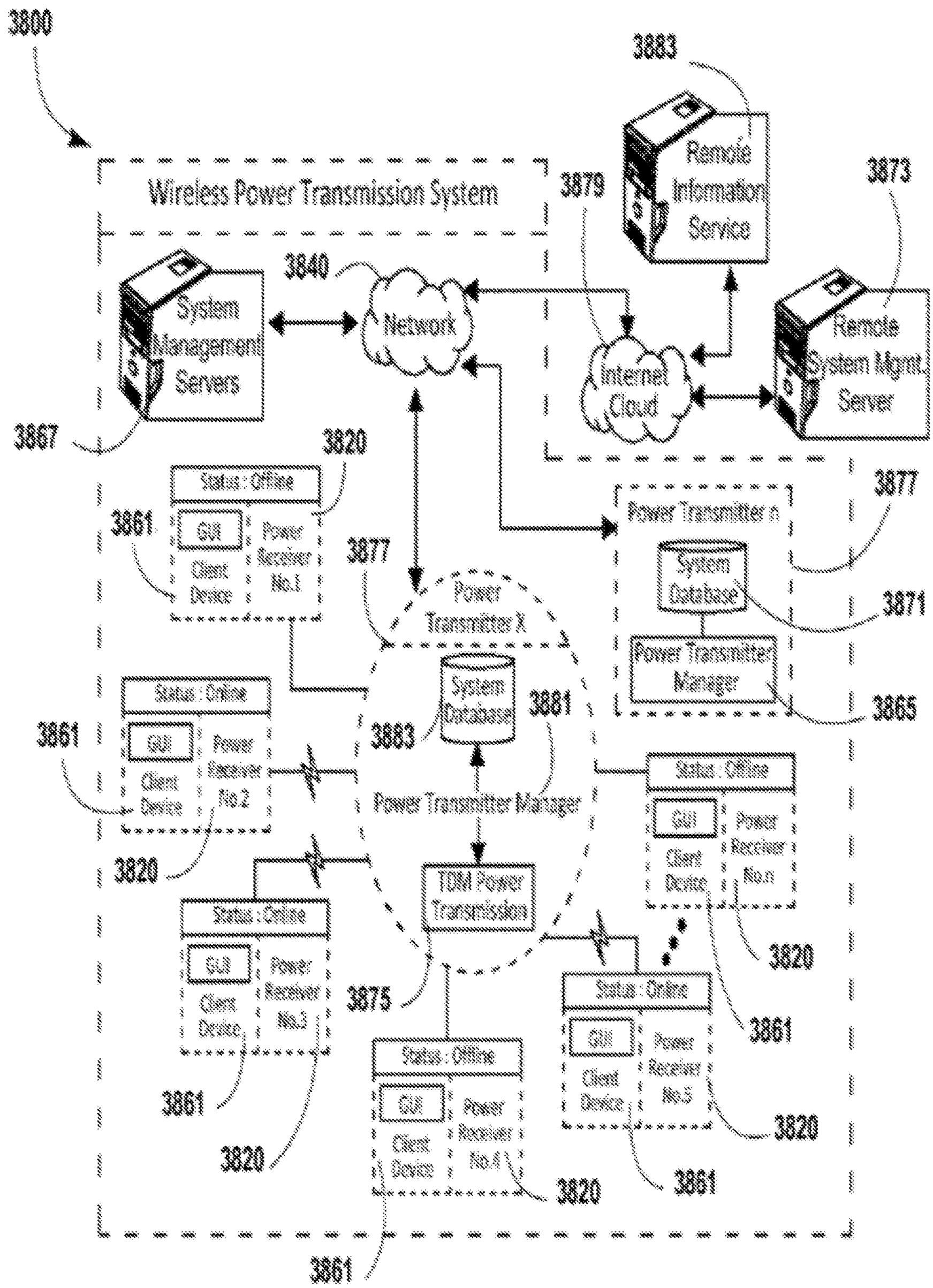
3800
Wireless Power Transmission System
3883
Remote Information Service
3879
3873
Remote System Mgmt. Server
3840
Network
System Management Servers
Internet Cloud
3867
3820
Status : Offline
GUI
Client Device
Power Receiver No.1
3861
3877
Power Transmitter n
System Database
3871
Power Transmitter Manager
3865
Power Transmitter X
System Database
3881
3883
Power Transmitter Manager
Status : Online
Power Receiver No.2
Status : Offline
Power Receiver No.n
TDM Power Transmission
3875
Power Receiver No.3
Power Receiver No.4
Power Receiver No.5

FIG. 38

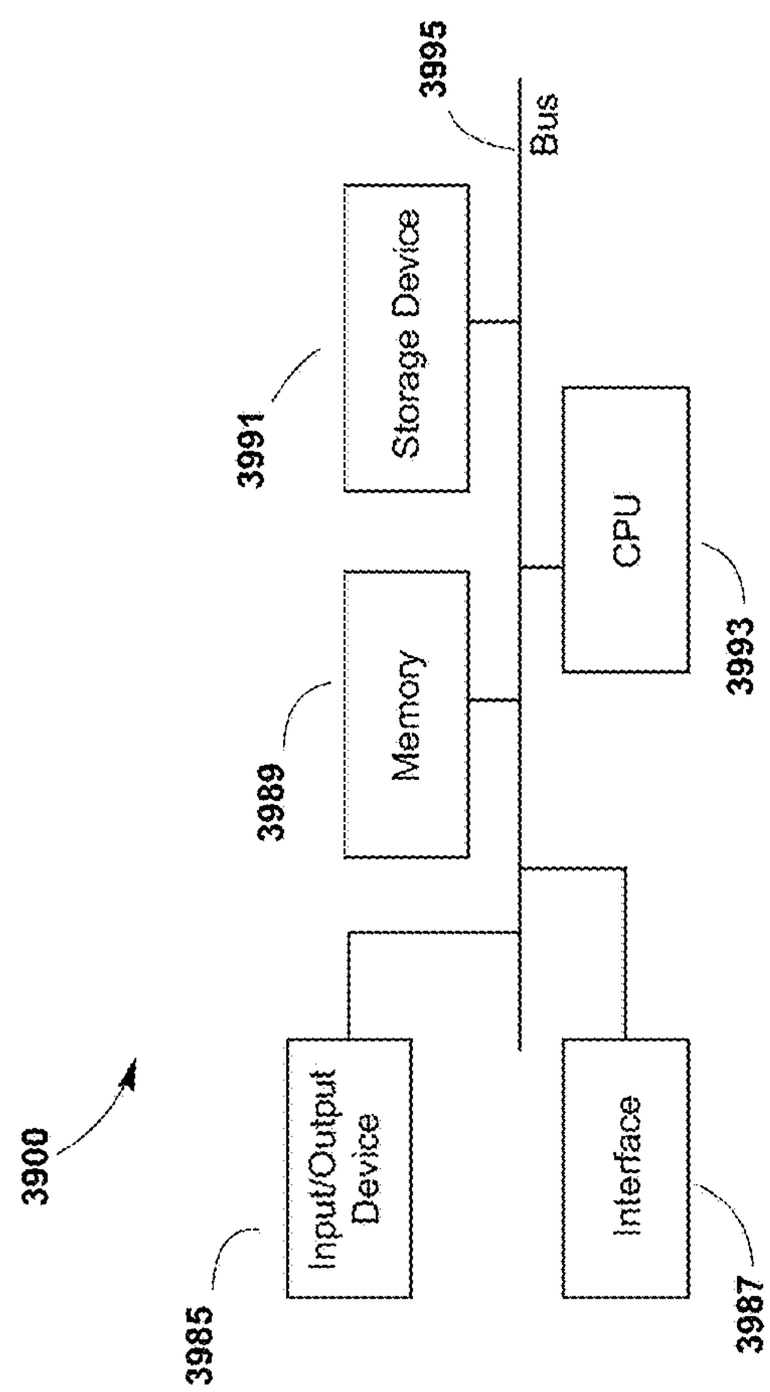
3900
3995
Bus
3991
Storage Device
3989
Memory
3993
CPU
3985
Input/Output Device
3987
Interface

FIG. 39

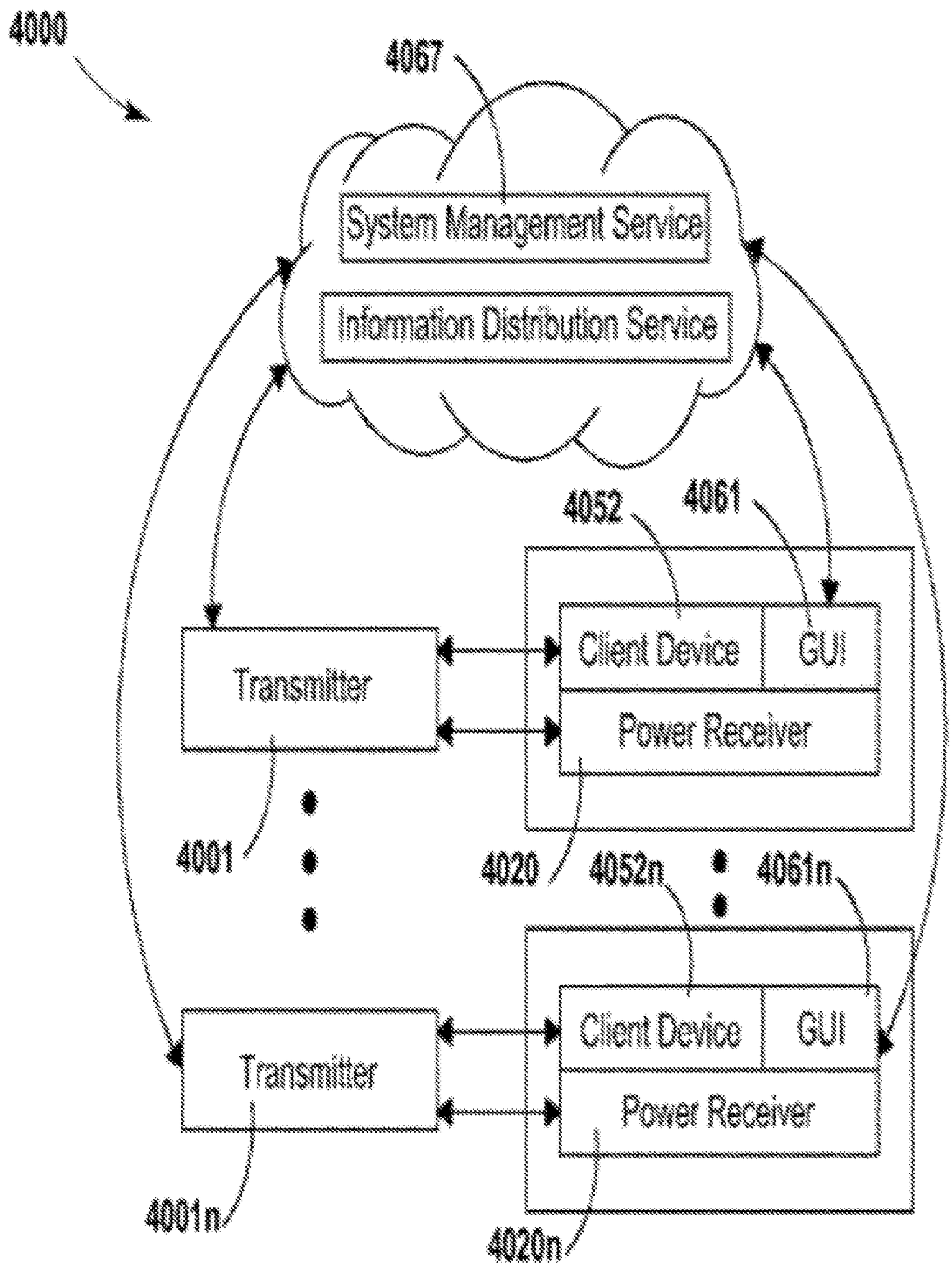
4000
4067
System Management Service
Information Distribution Service
4052
4061
Client Device
GUI
Transmitter
Power Receiver
4001
4020
4052n
4061n
Client Device
GUI
Transmitter
Power Receiver
4001n
4020n

FIG. 40

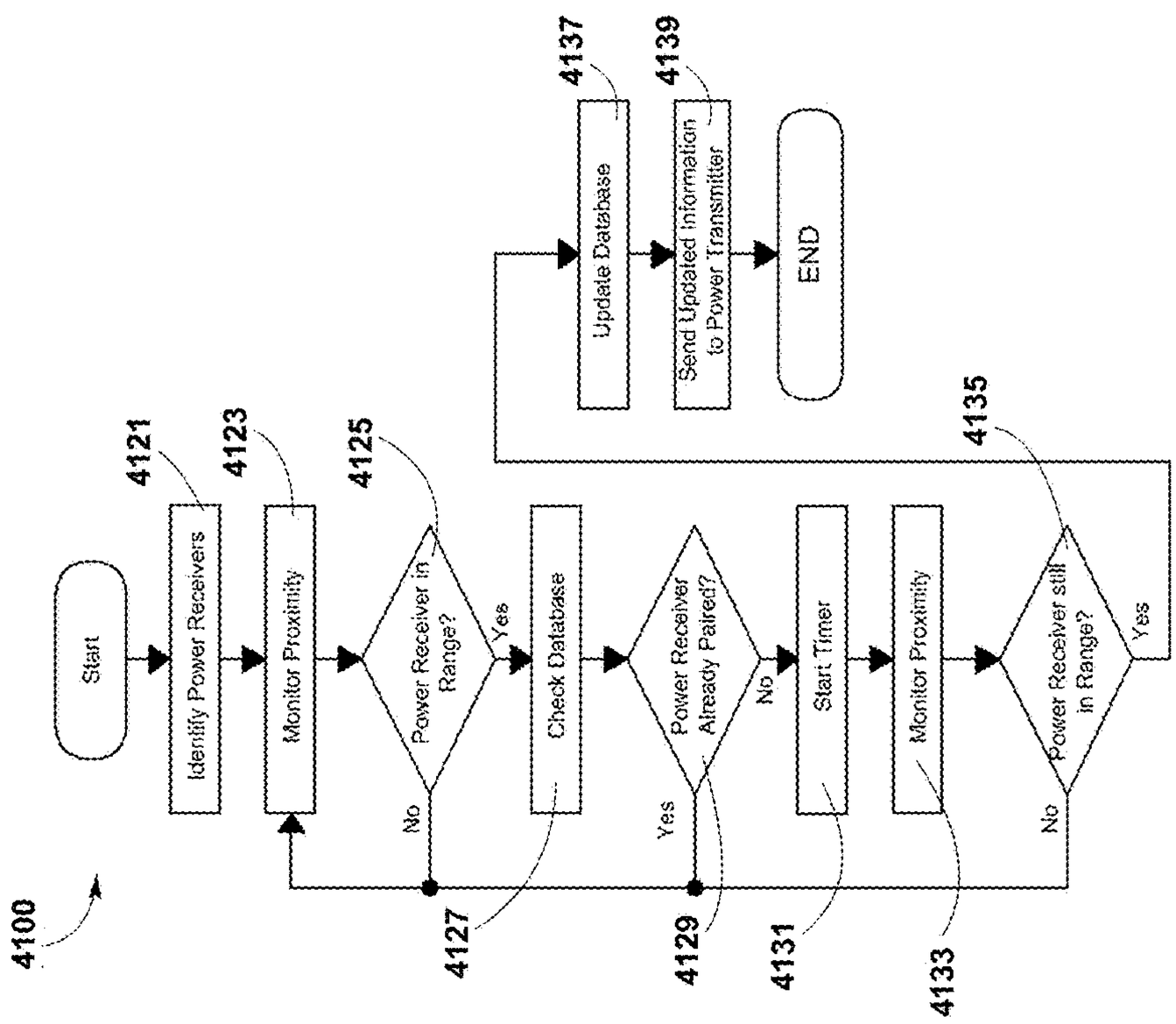
4100
Start
4121
Identify Power Receivers
4123
Monitor Proximity
4125
Power Receiver in Range?
Yes
No
4127
Check Database
4129
Power Receiver Already Paired?
Yes
No
4131
Start Timer
133
Monitor Proximity
4135
Power Receiver still in Range?
Yes
No
4137
Update Database
4139
Send Updated Information to Power Transmitter
END

FIG. 41

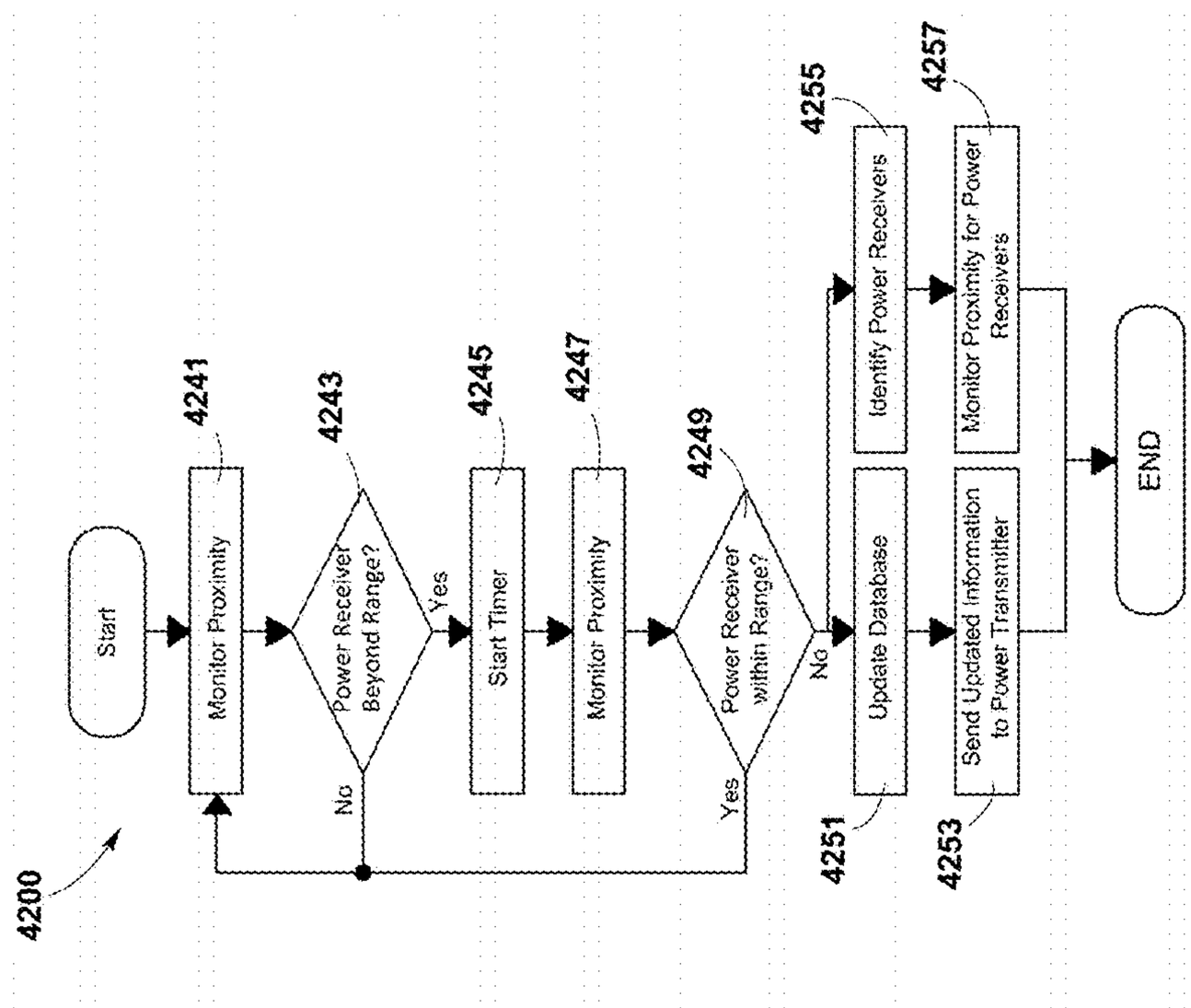
4200
Start
Monitor Proximity
4241
Power Receiver Beyond Range?
4243
No
Yes
Start Timer
4245
Monitor Proximity
4247
Power Receiver within Range?
4249
No
Yes
Update Database
4251
Send Updated Information to Power Transmitter
4253
Identify Power Receivers
4255
Monitor Proximity for Power Receivers
4257
END

FIG. 42

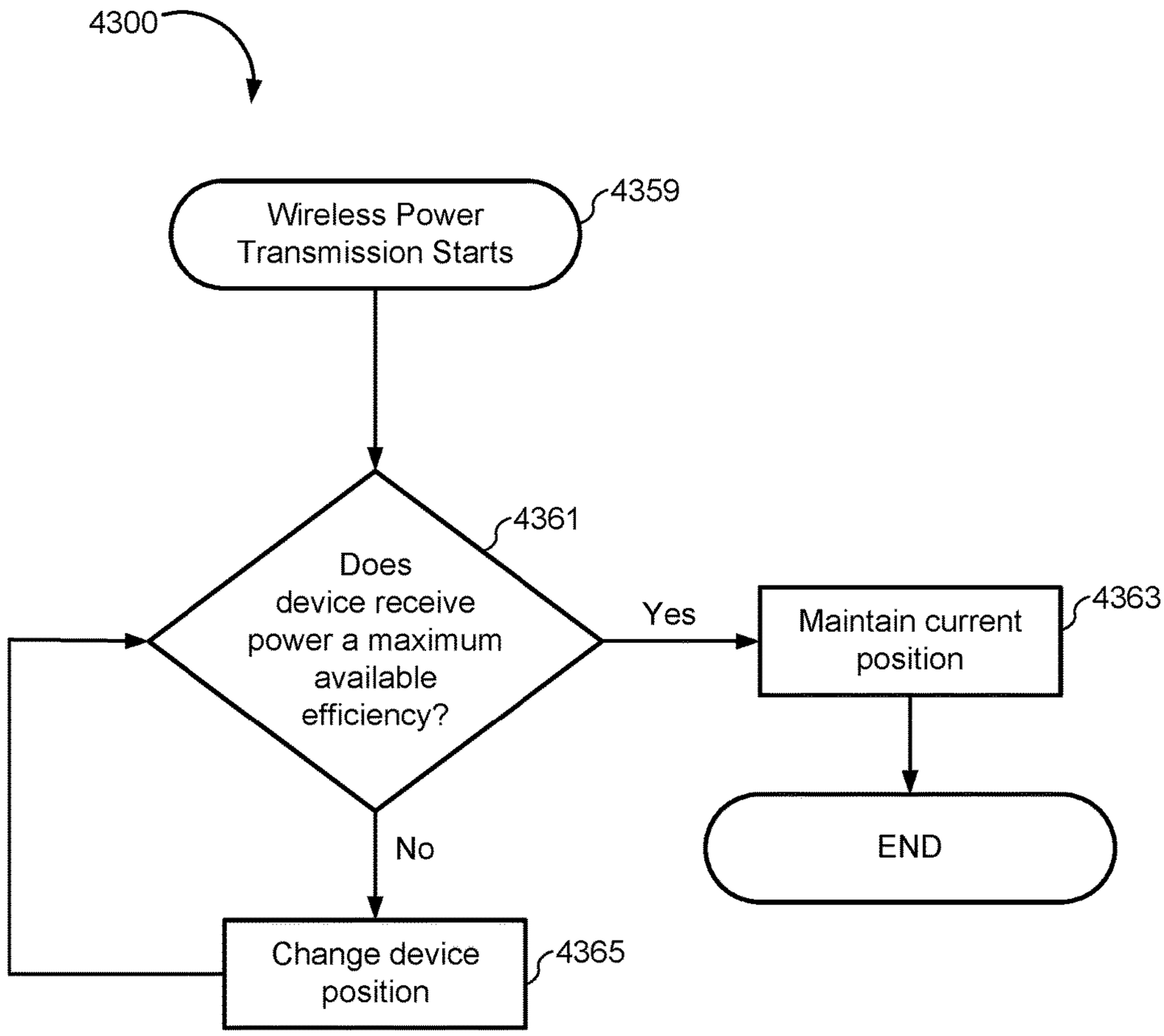
4300
Wireless Power Transmission Starts
4359
Does device receive power a maximum available efficiency?
4361
Yes
Maintain current position
4363
END
No
Change device position
4365

FIG. 43

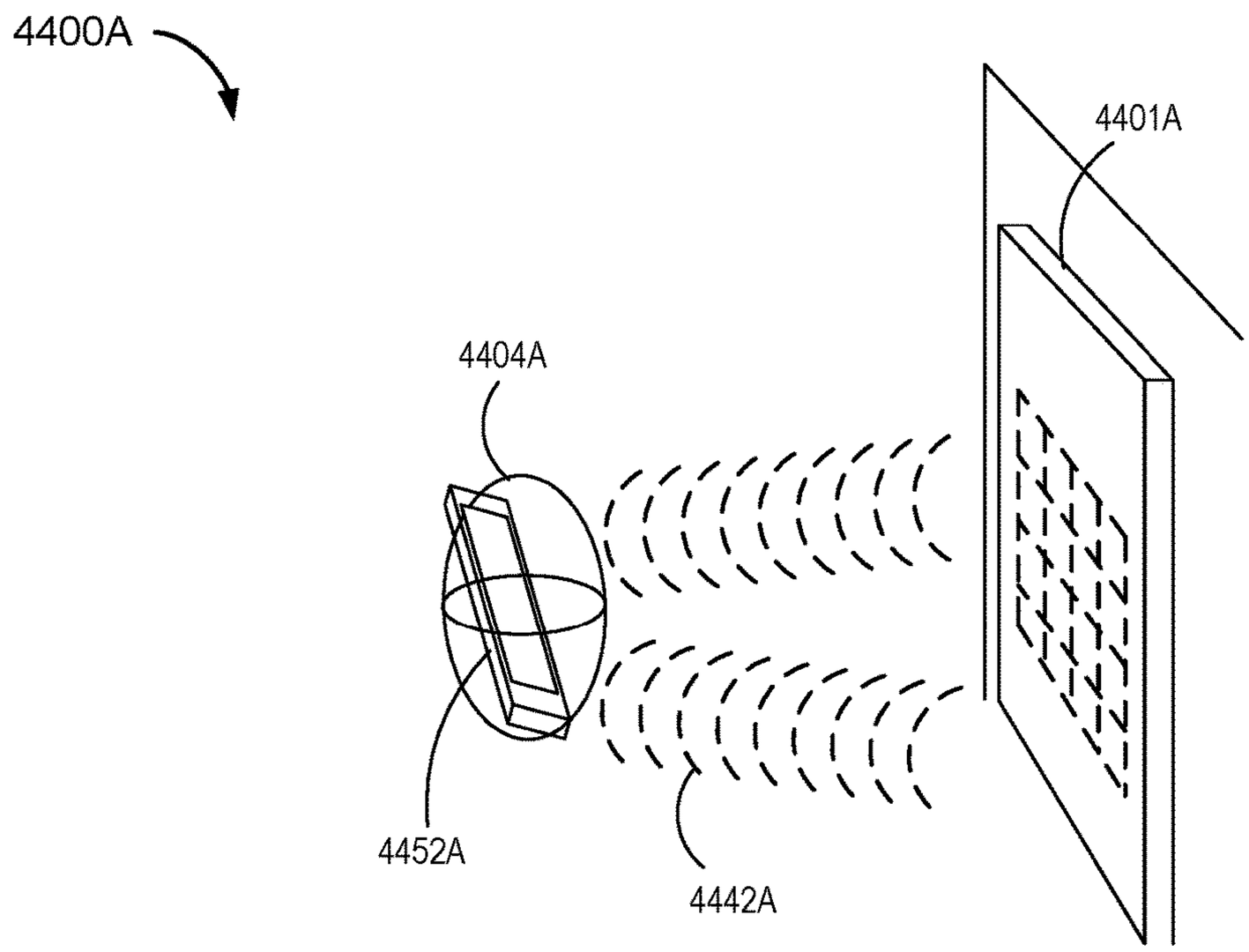

FIG. 44A

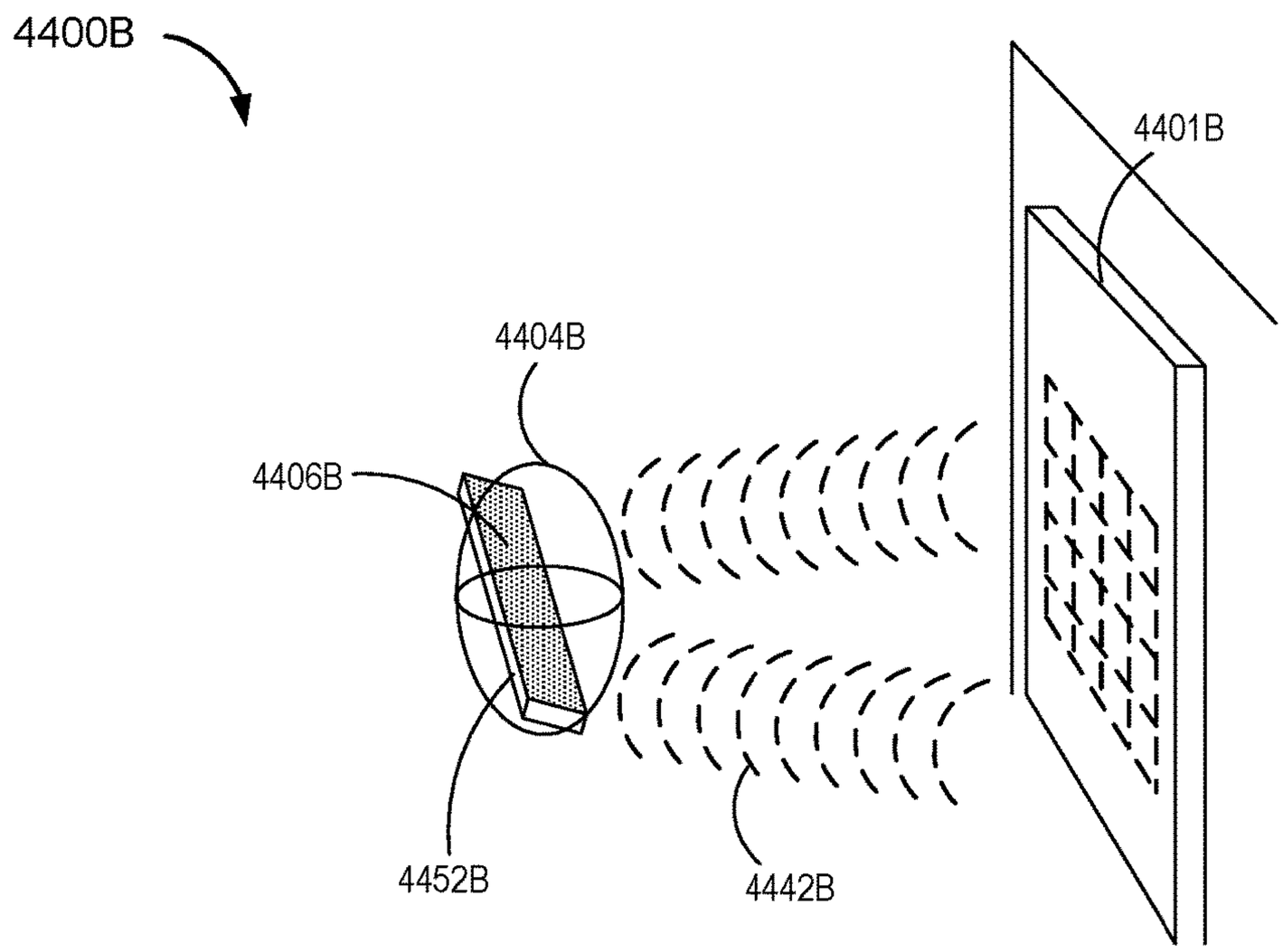

FIG. 44B

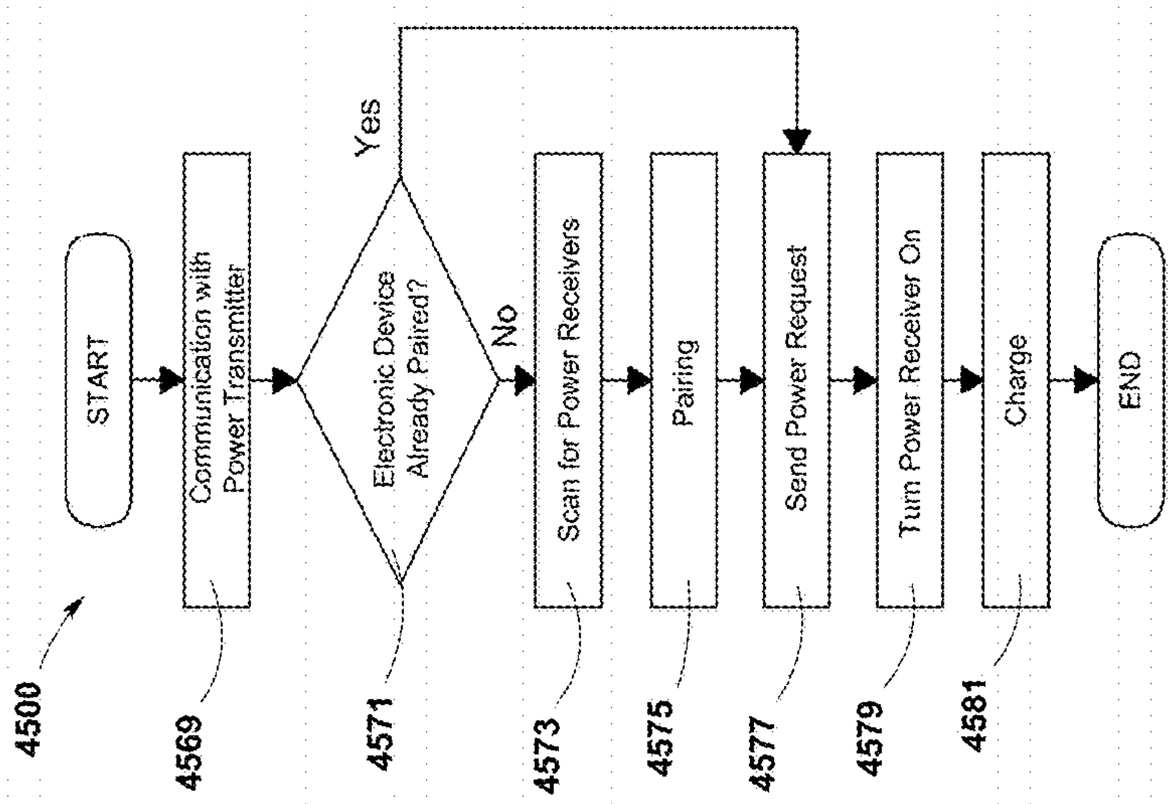
4500
START
4569
Communication with Power Transmitter
4571
Electronic Device Already Paired?
Yes
No
4573
Scan for Power Receivers
4575
Pairing
4577
Send Power Request
4579
Turn Power Receiver On
4581
Charge
END

FIG. 45

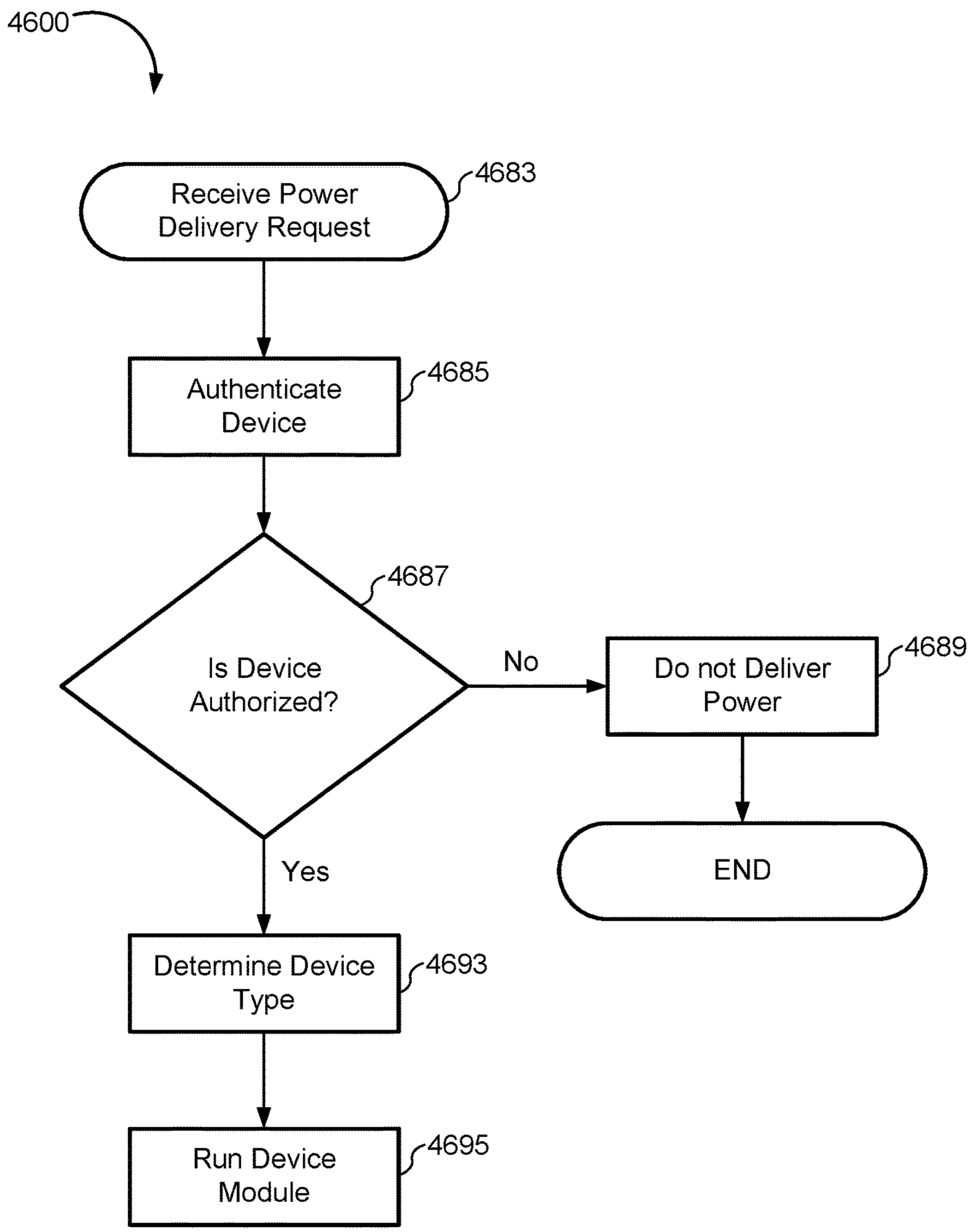
4600
Receive Power Delivery Request
4683
Authenticate Device
4685
Is Device Authorized?
4687
No
Do not Deliver Power
4689
END
Yes
Determine Device Type
4693
Run Device Module
4695

FIG. 46

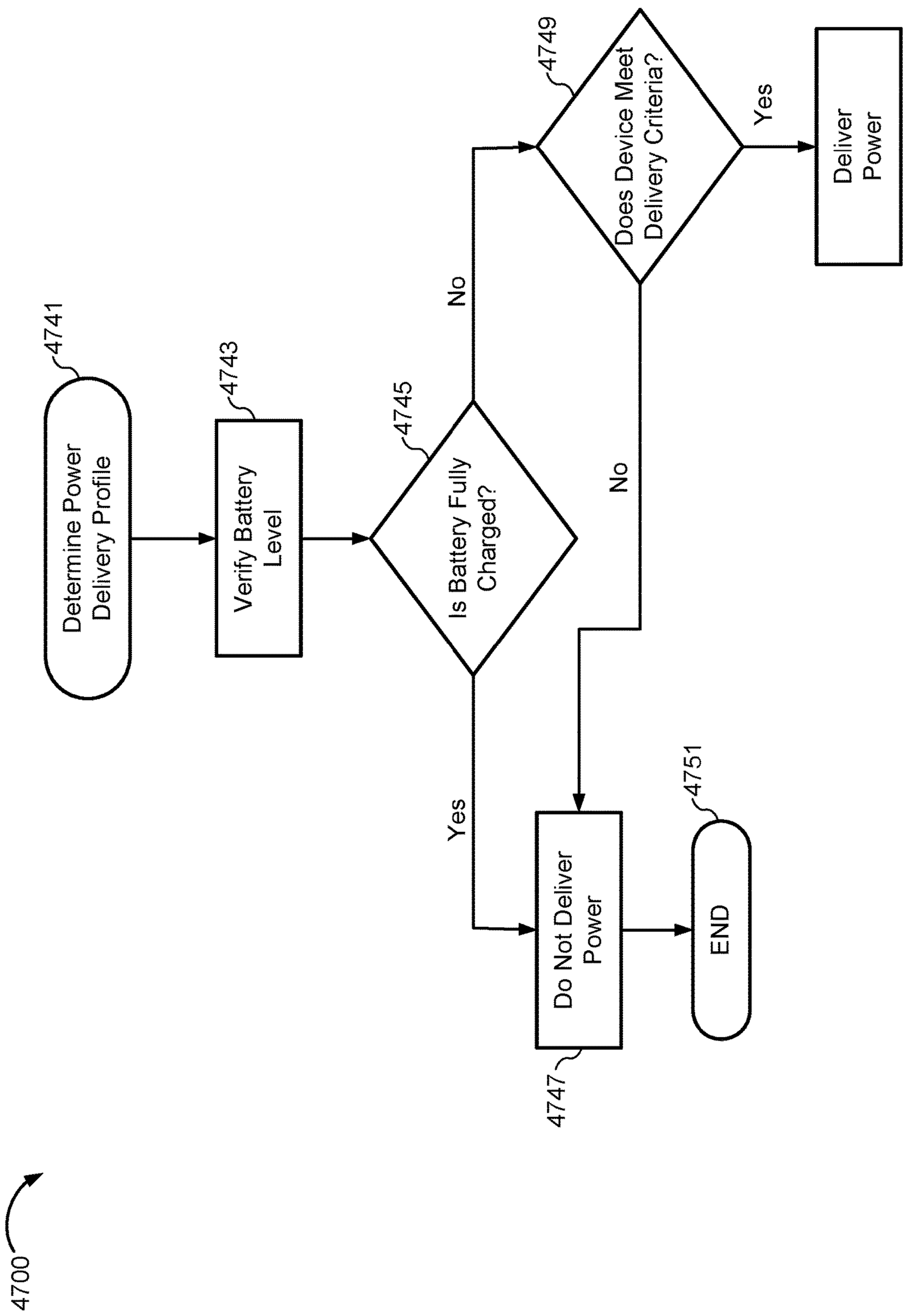
4700
4741
Determine Power Delivery Profile
4743
Verify Battery Level
4745
Is Battery Fully Charged?
No
Yes
4749
Does Device Meet Delivery Criteria?
Yes
No
Deliver Power
4747
Do Not Deliver Power
4751
END

FIG. 47

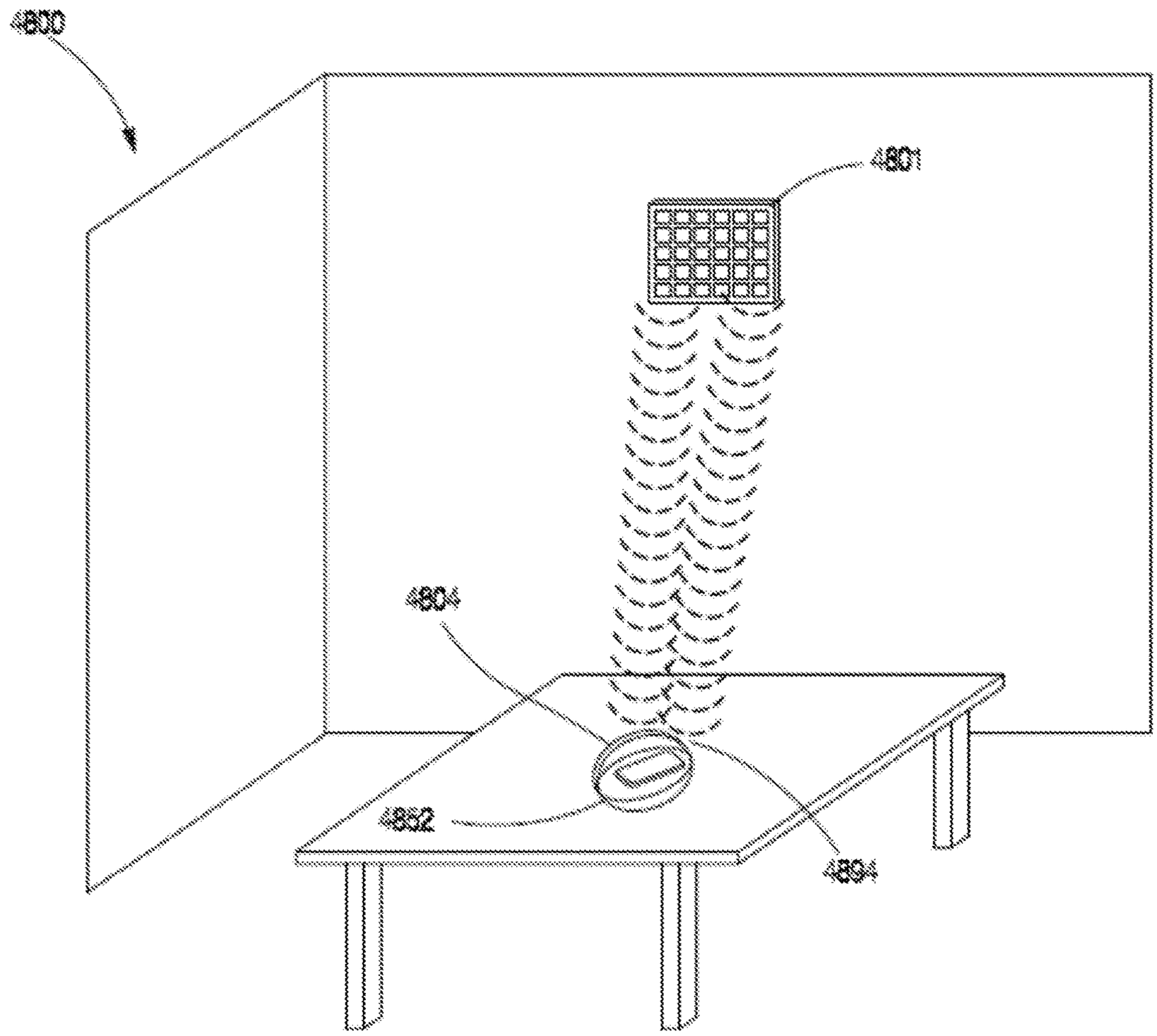

FIG. 48

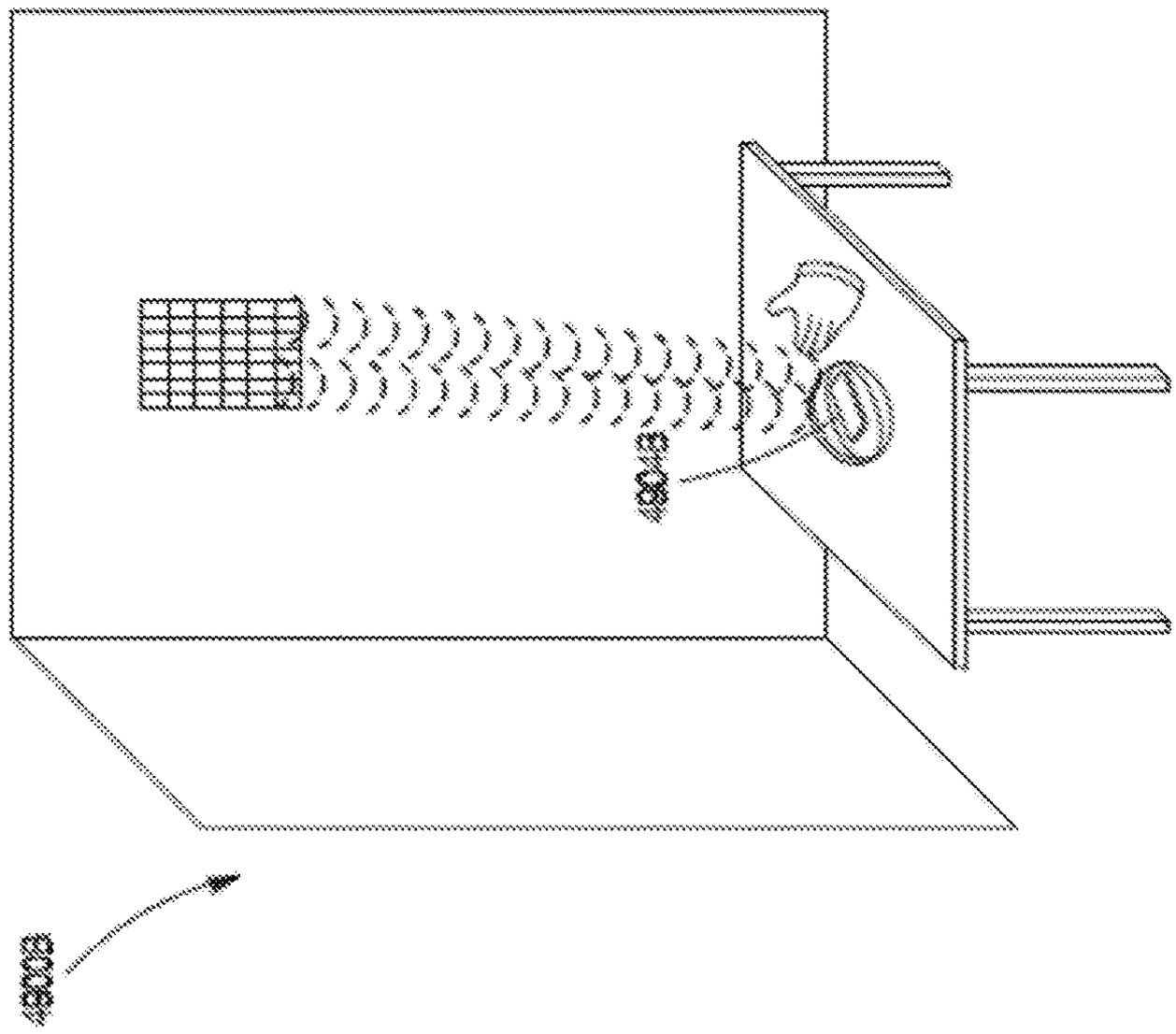

FIG. 49B

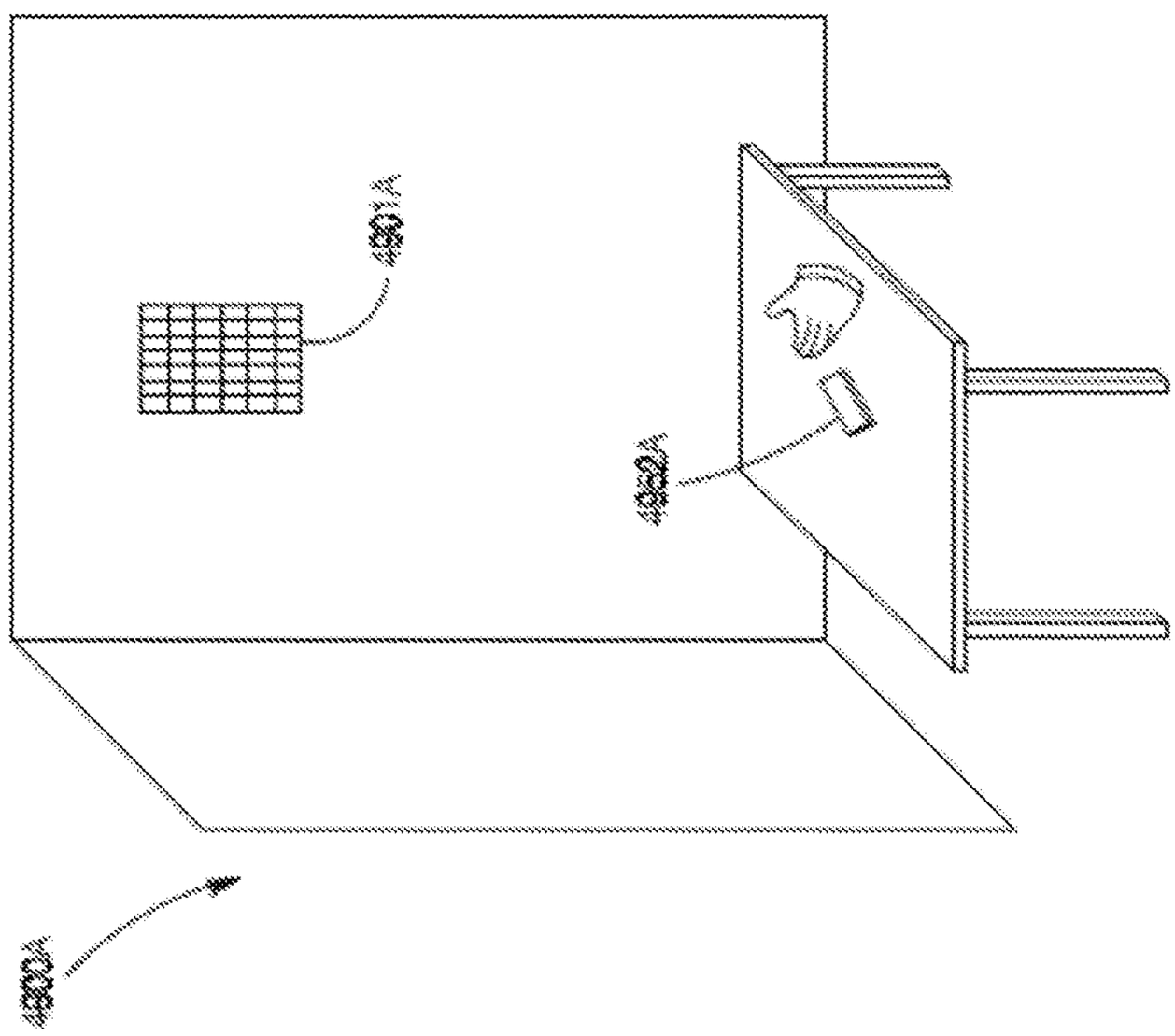

FIG. 49A

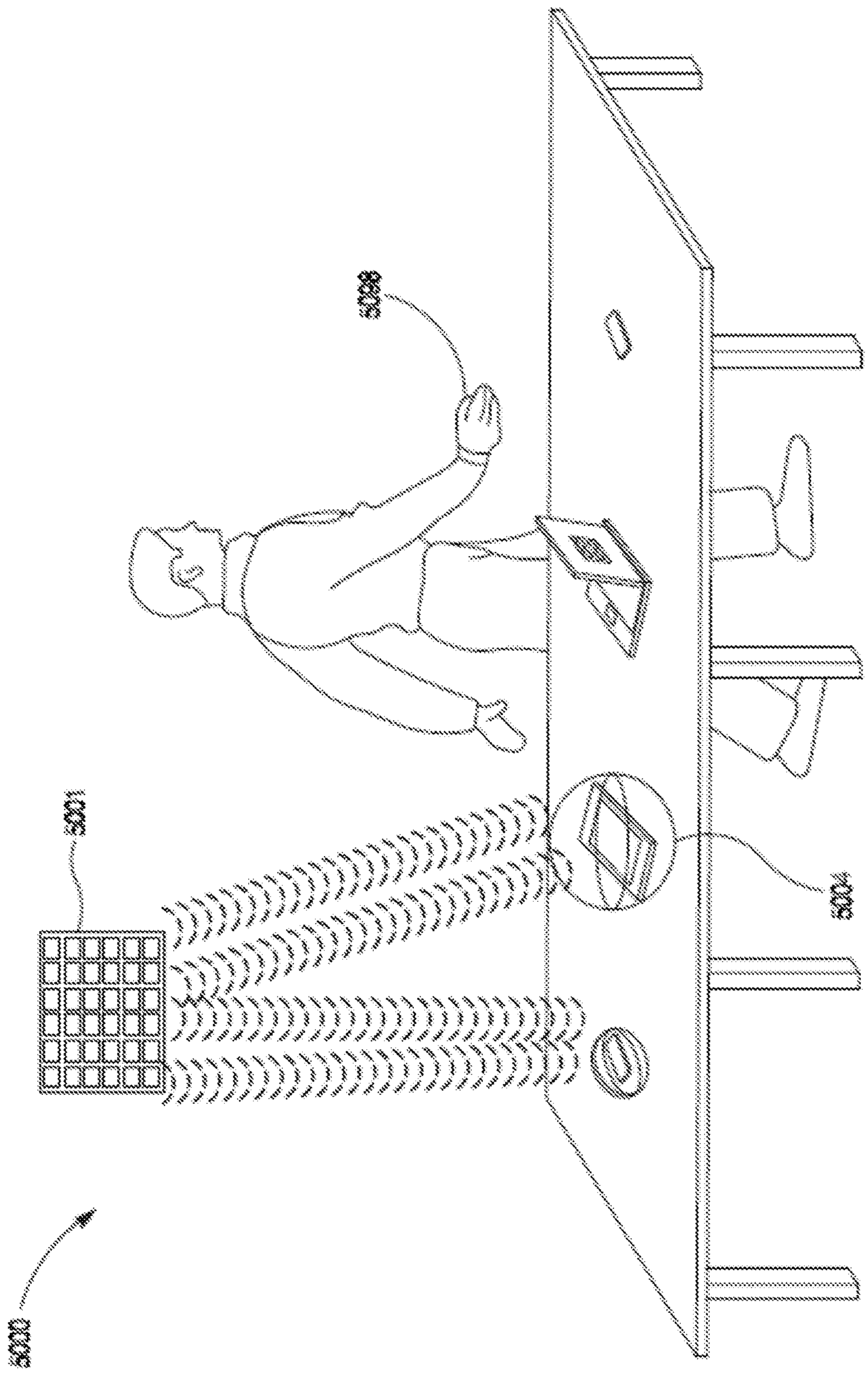

FIG. 50

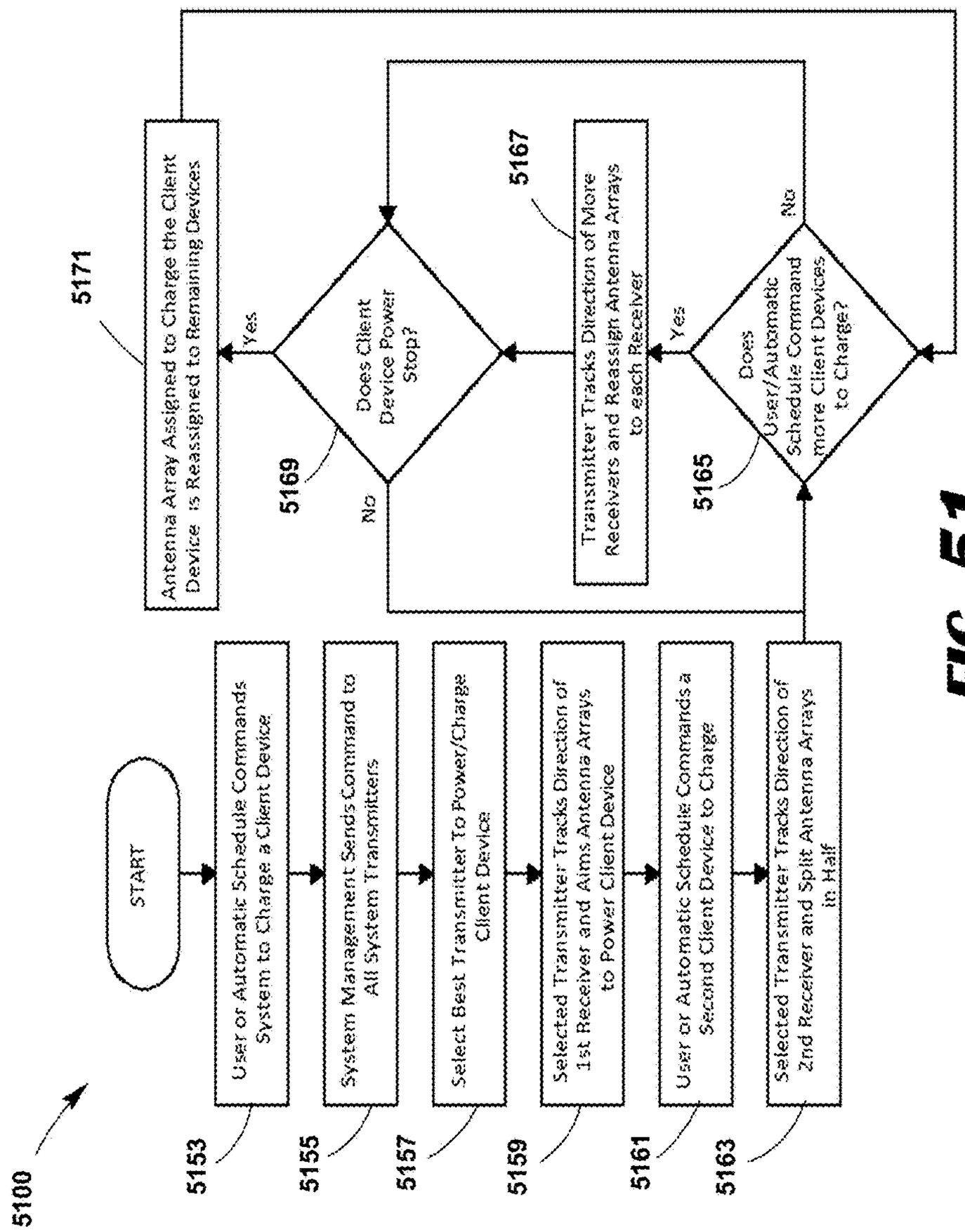
5100
START
5153
User or Automatic Schedule Commands System to Charge a Client Device
5155
System Management Sends Command to All System Transmitters
5157
Select Best Transmitter To Power/Charge Client Device
5159
Selected Transmitter Tracks Direction of 1st Receiver and Aims Antenna Arrays to Power Client Device
5161
User or Automatic Schedule Commands a Second Client Device to Charge
5163
Selected Transmitter Tracks Direction of 2nd Receiver and Split Antenna Arrays in Half
5165
Does User/Automatic Schedule Command more Client Devices to Charge?
Yes
No
5167
Transmitter Tracks Direction of More Receivers and Reassign Antenna Arrays to each Receiver
5169
Does Client Device Power Stop?
Yes
No
5171
Antenna Array Assigned to Charge the Client Device is Reassigned to Remaining Devices

FIG. 51

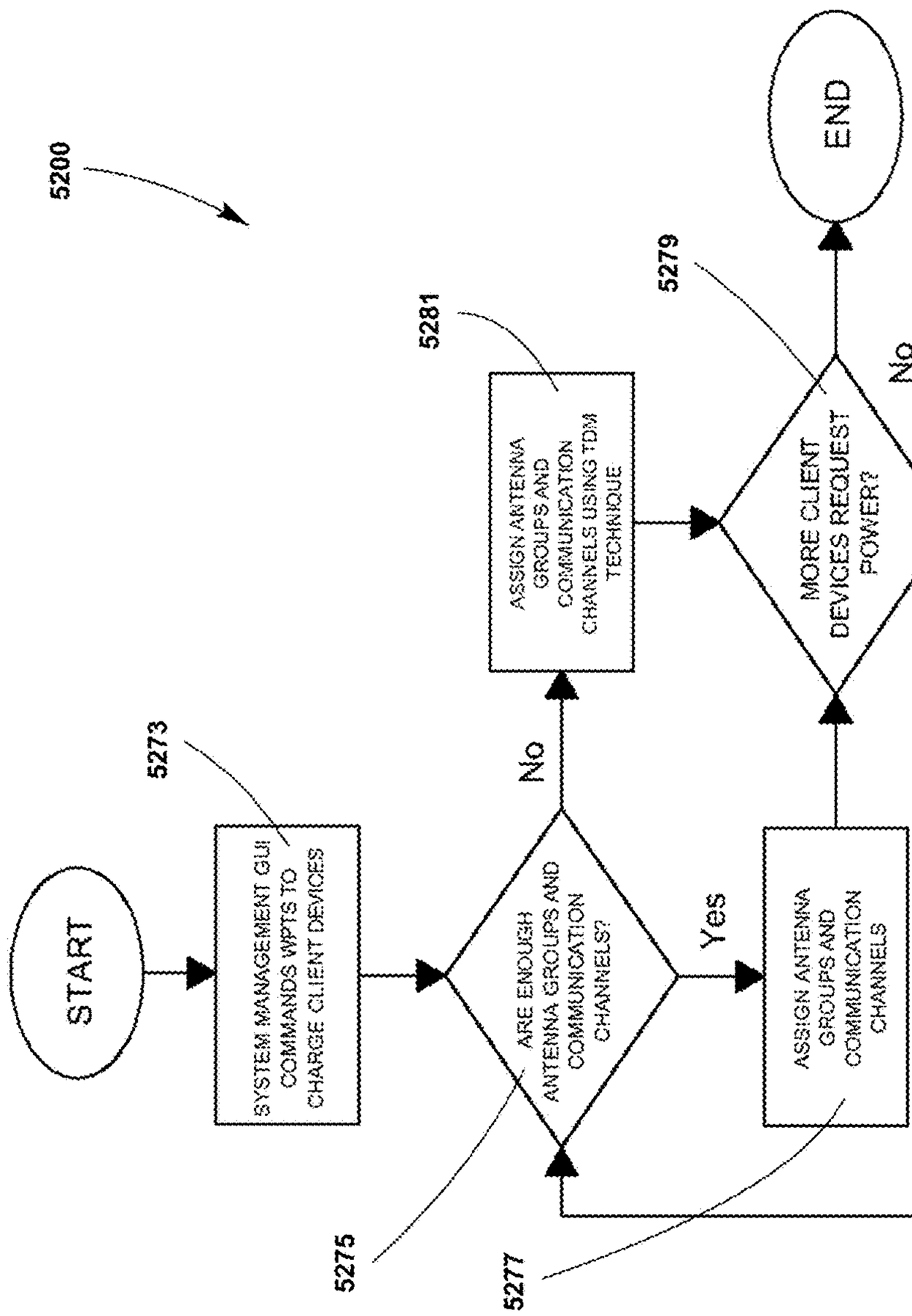
5200
START
5273
SYSTEM MANAGEMENT GUI COMMANDS WPTS TO CHARGE CLIENT DEVICES
5275
ARE ENOUGH ANTENNA GROUPS AND COMMUNICATION CHANNELS?
No
5281
ASSIGN ANTENNA GROUPS AND COMMUNICATION CHANNELS USING TDM TECHNIQUE
Yes
5277
ASSIGN ANTENNA GROUPS AND COMMUNICATION CHANNELS
5279
MORE CLIENT DEVICES REQUEST POWER?
No
END
Yes

FIG. 52

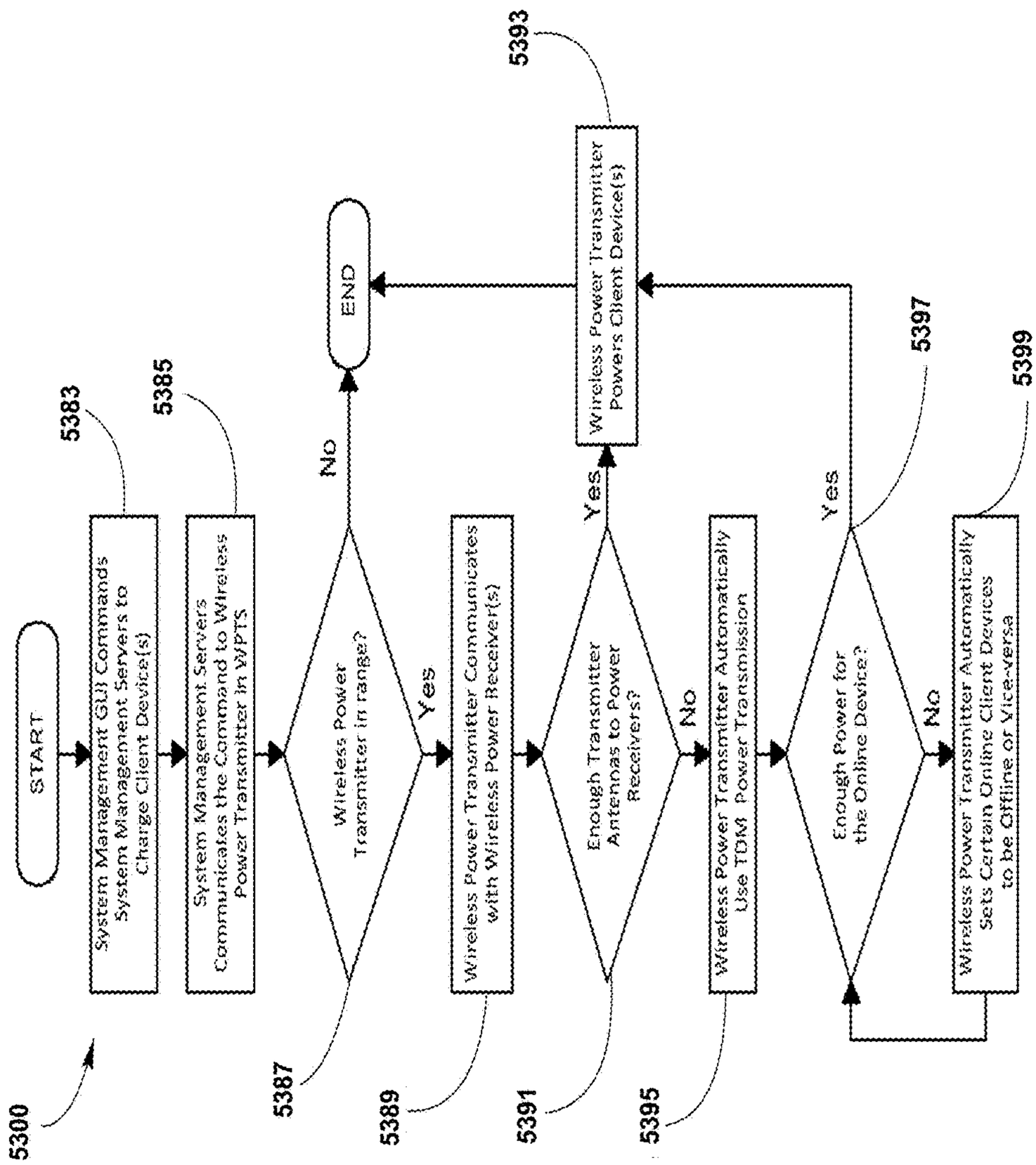
5300
START
5383
System Management GUI Commands System Management Servers to Charge Client Device(s)
5385
System Management Servers Communicates the Command to Wireless Power Transmitter in WPTS
5387
Wireless Power Transmitter in range?
No
END
Yes
5389
Wireless Power Transmitter Communicates with Wireless Power Receiver(s)
5391
Enough Transmitter Antennas to Power Receivers?
Yes
Wireless Power Transmitter Powers Client Device(s)
No
5395
Wireless Power Transmitter Automatically Use TDM Power Transmission
5397
Enough Power for the Online Device?
Yes
No
5399
Wireless Power Transmitter Automatically Sets Certain Online Client Devices to be Offline or Vice-versa
5393

FIG. 53

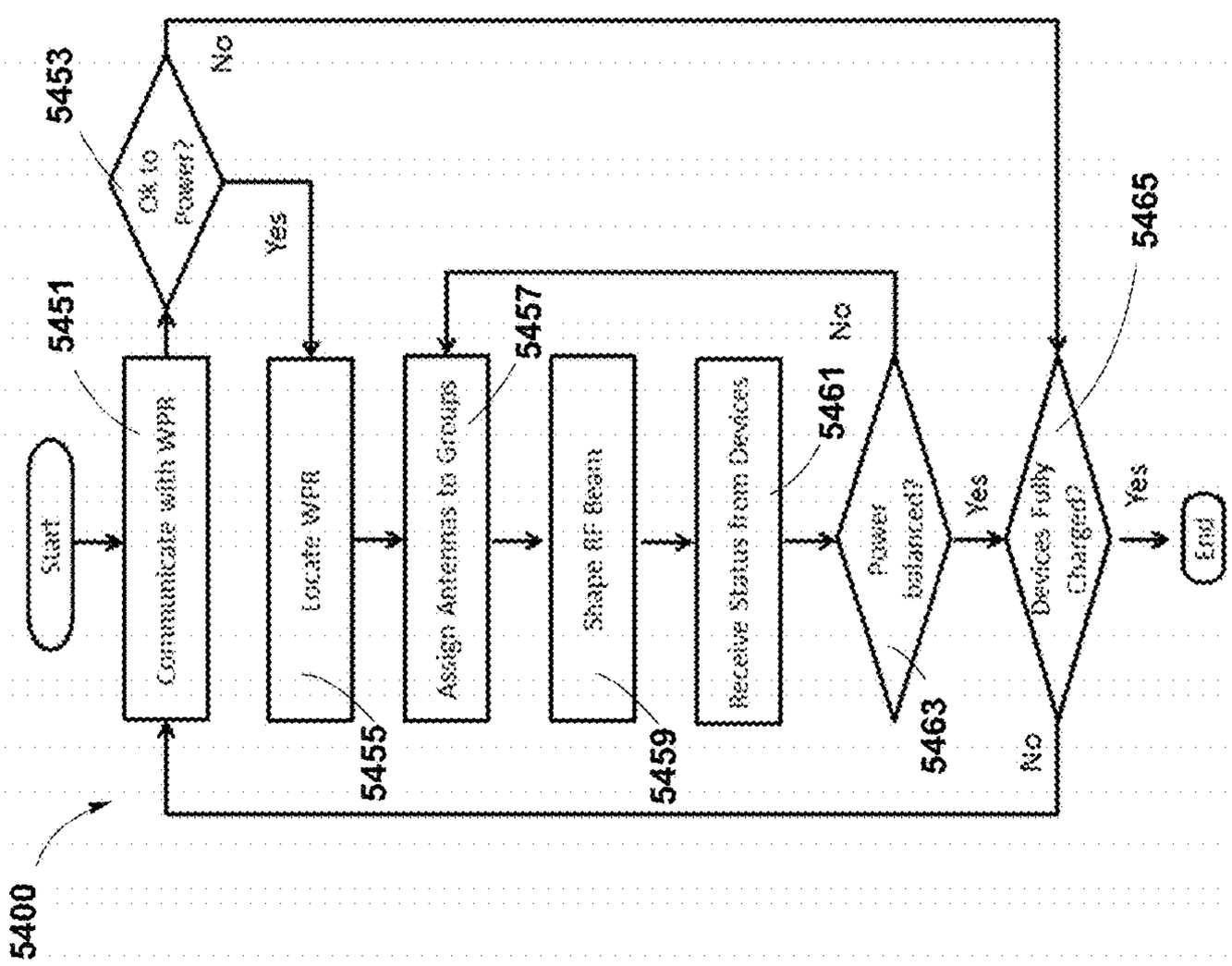
5400
Start
Communicate with WPR
5451
Ok to Power?
5453
No
Yes
Locate WPR
5455
Assign Antennas to Groups
5457
Shape RF Beam
5459
Receive Status from Devices
5461
Power balanced?
5463
No
Yes
Devices Fully Charged?
5465
No
Yes
End

FIG. 54

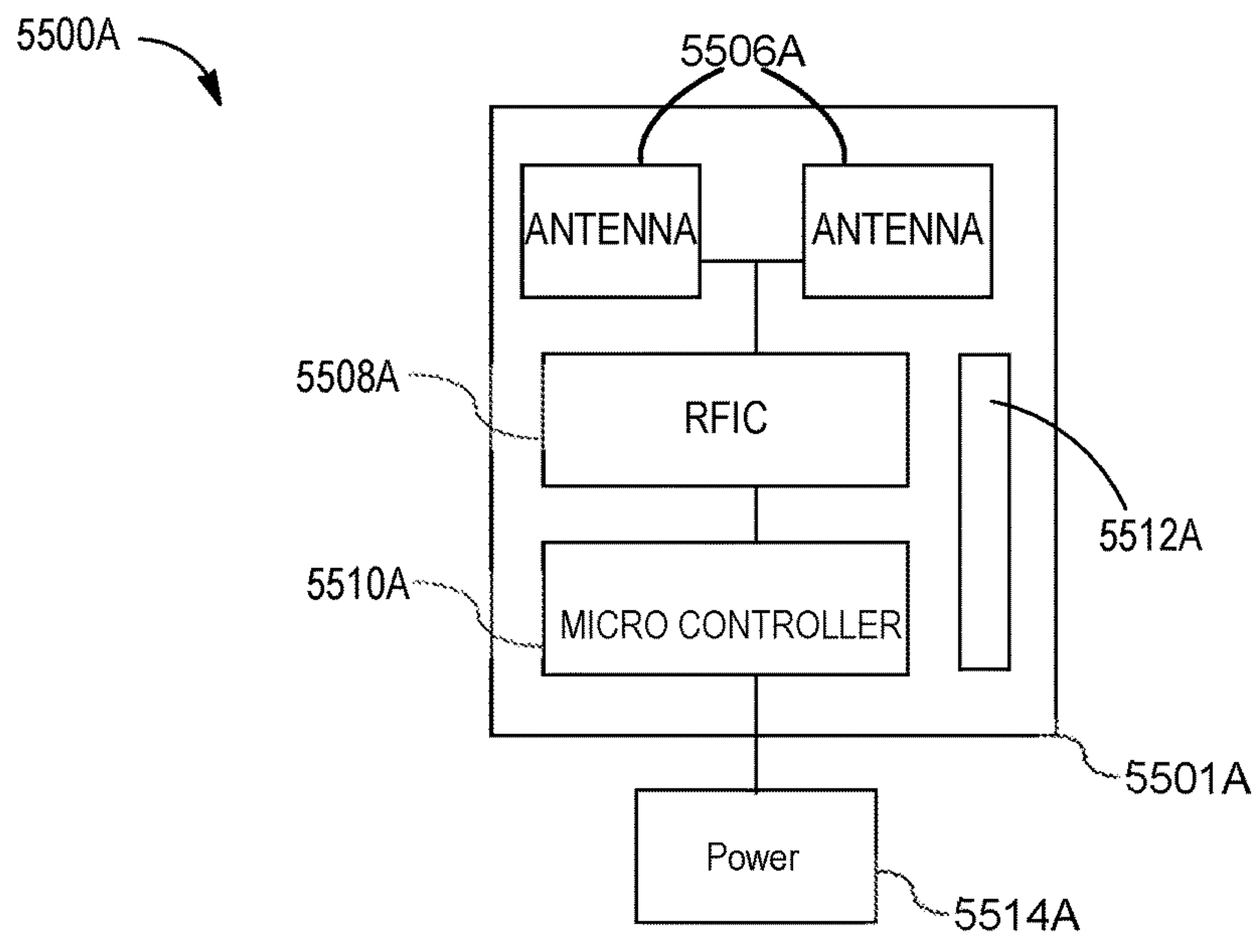

FIG. 55A

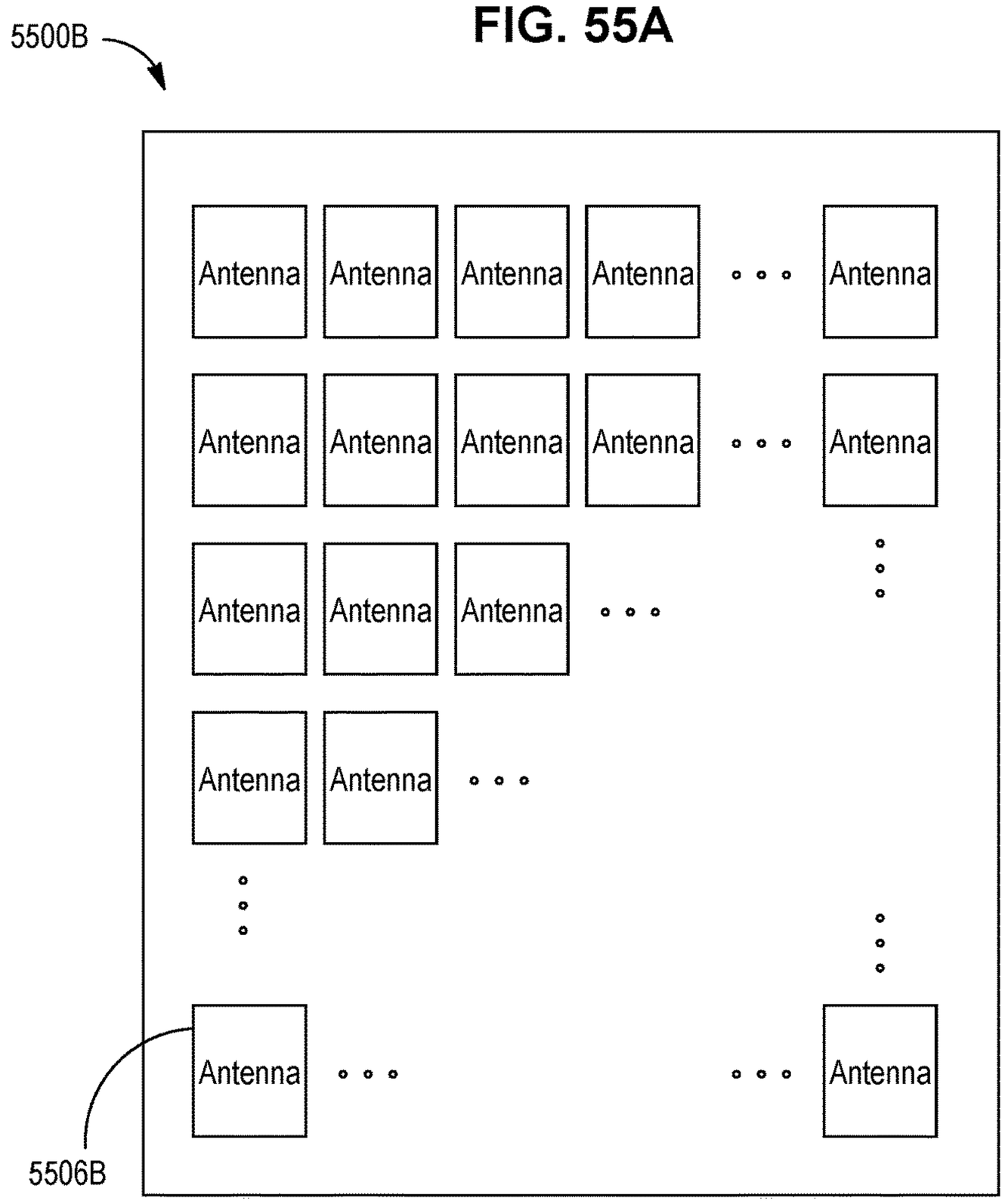

FIG. 55B

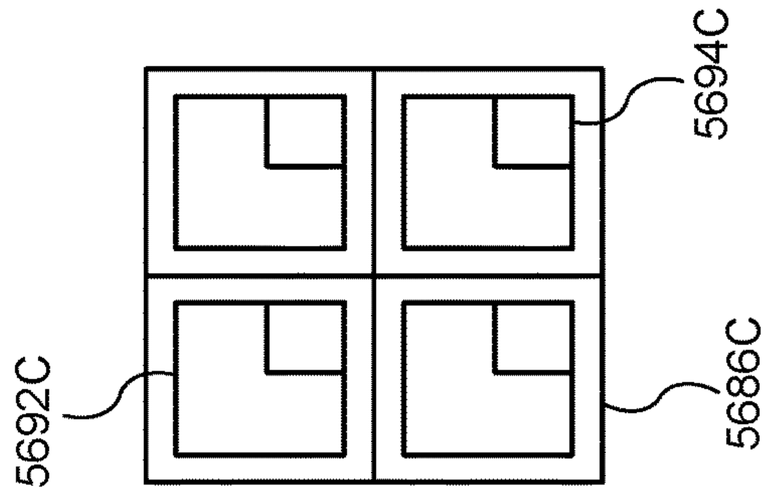

FIG. 56C

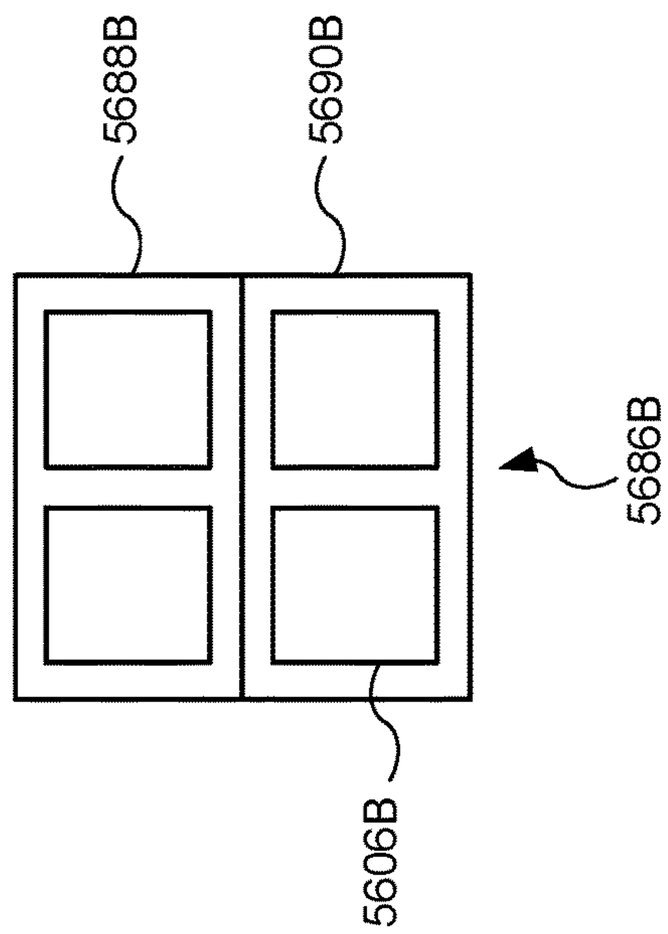

FIG. 56B

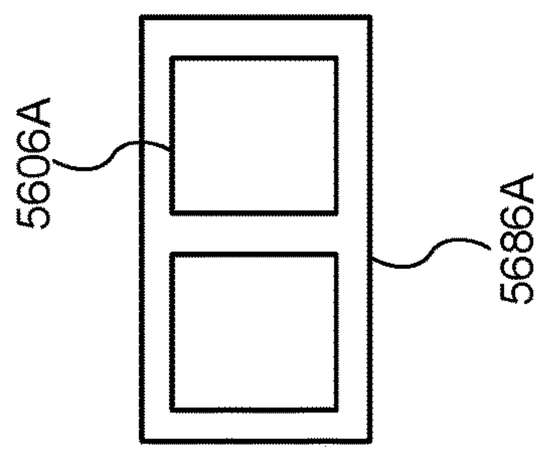

FIG. 56A

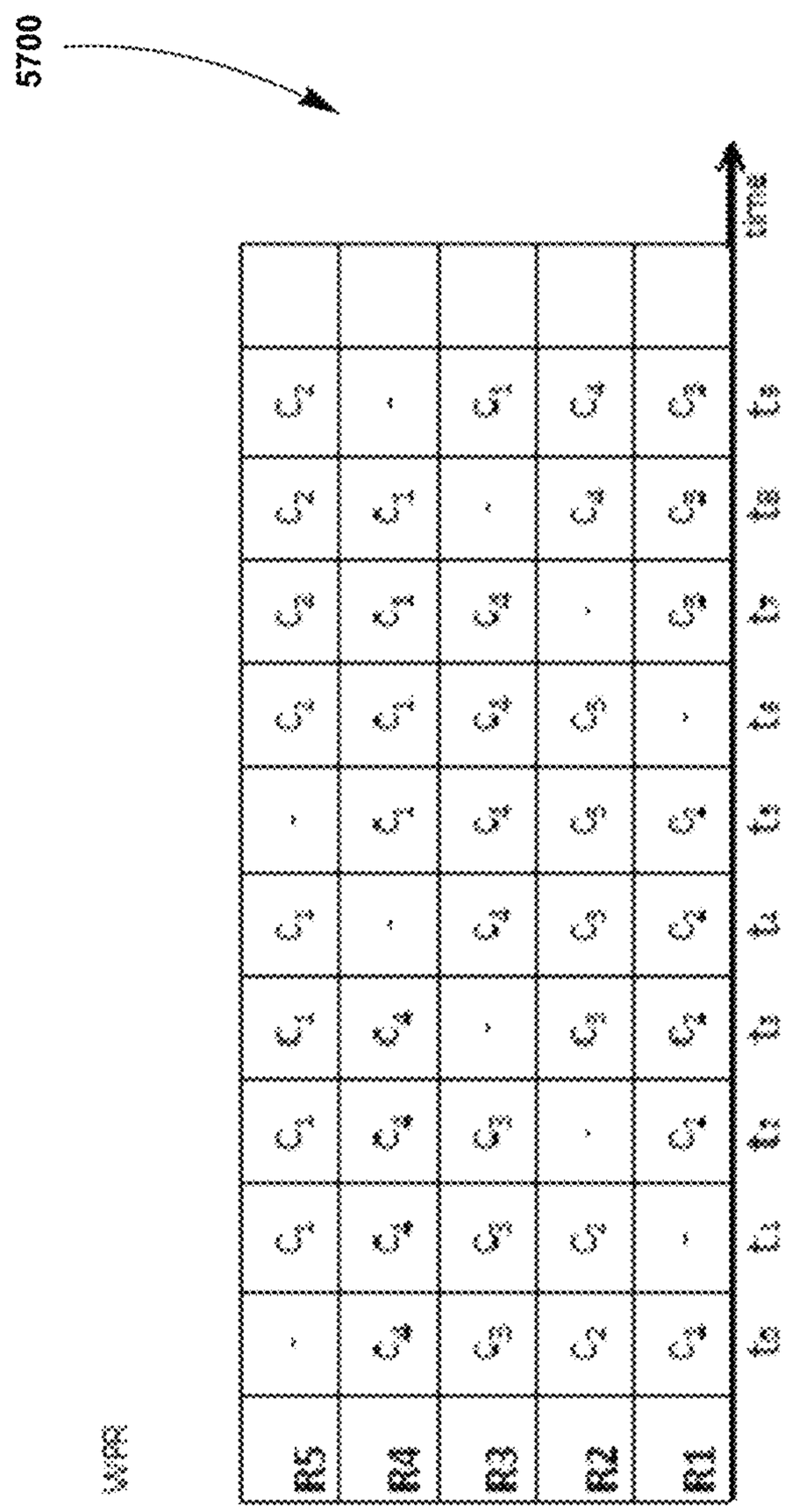
5700
WPR
R5
R4
R3
R2
R1
t9
t10
t11
t12
t13
t14
t15
t16
t17
t18
t19
t20
t21
t22
t23
t24
t25
t26

FIG. 57

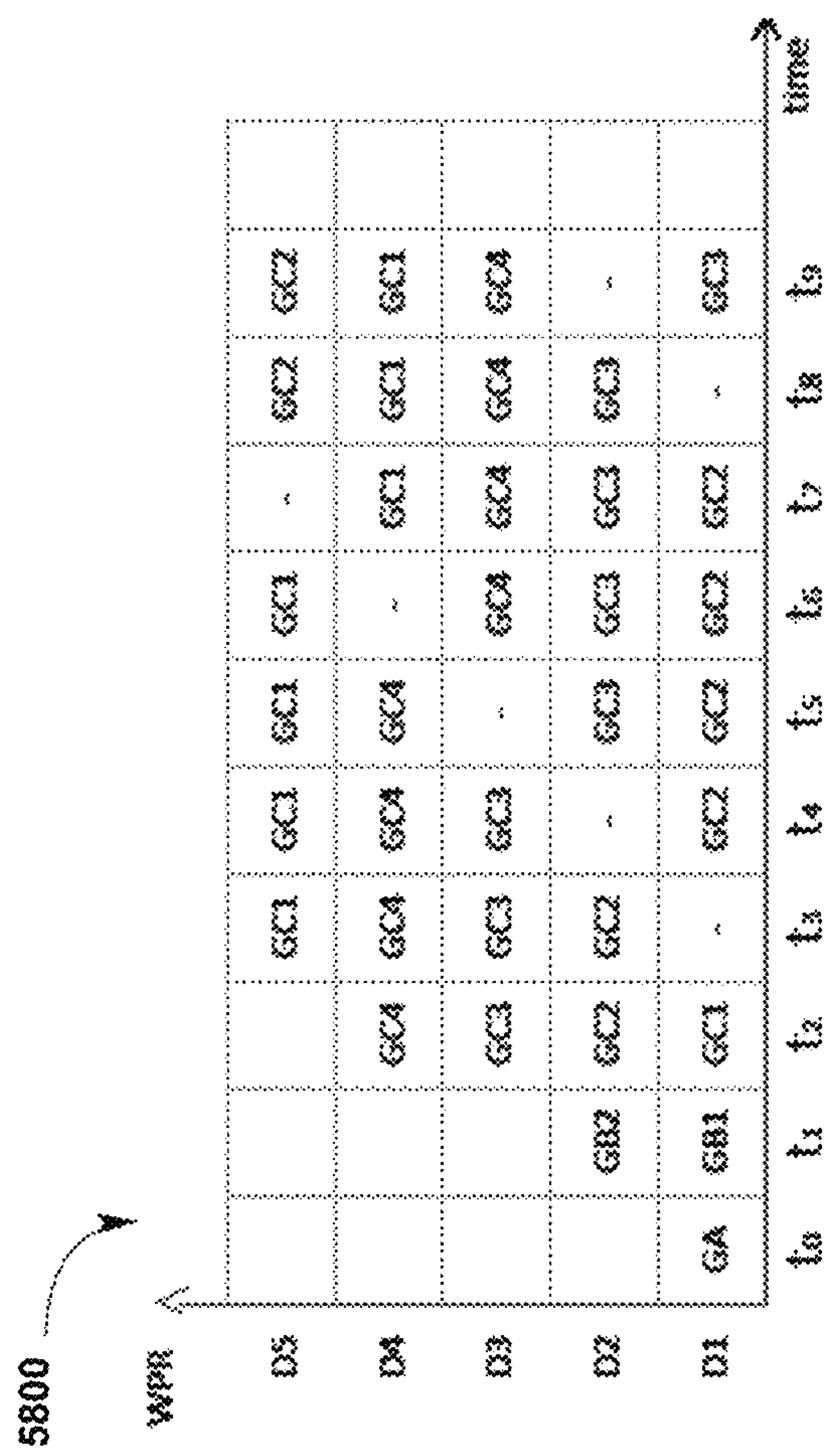
5800
WPR
D5
D4
D3
D2
D1
GA
GB1
GB2
GC1
GC2
GC3
GC4
t0
t1
t2
t3
t4
t5
t6
t7
t8
t9
time

FIG. 58

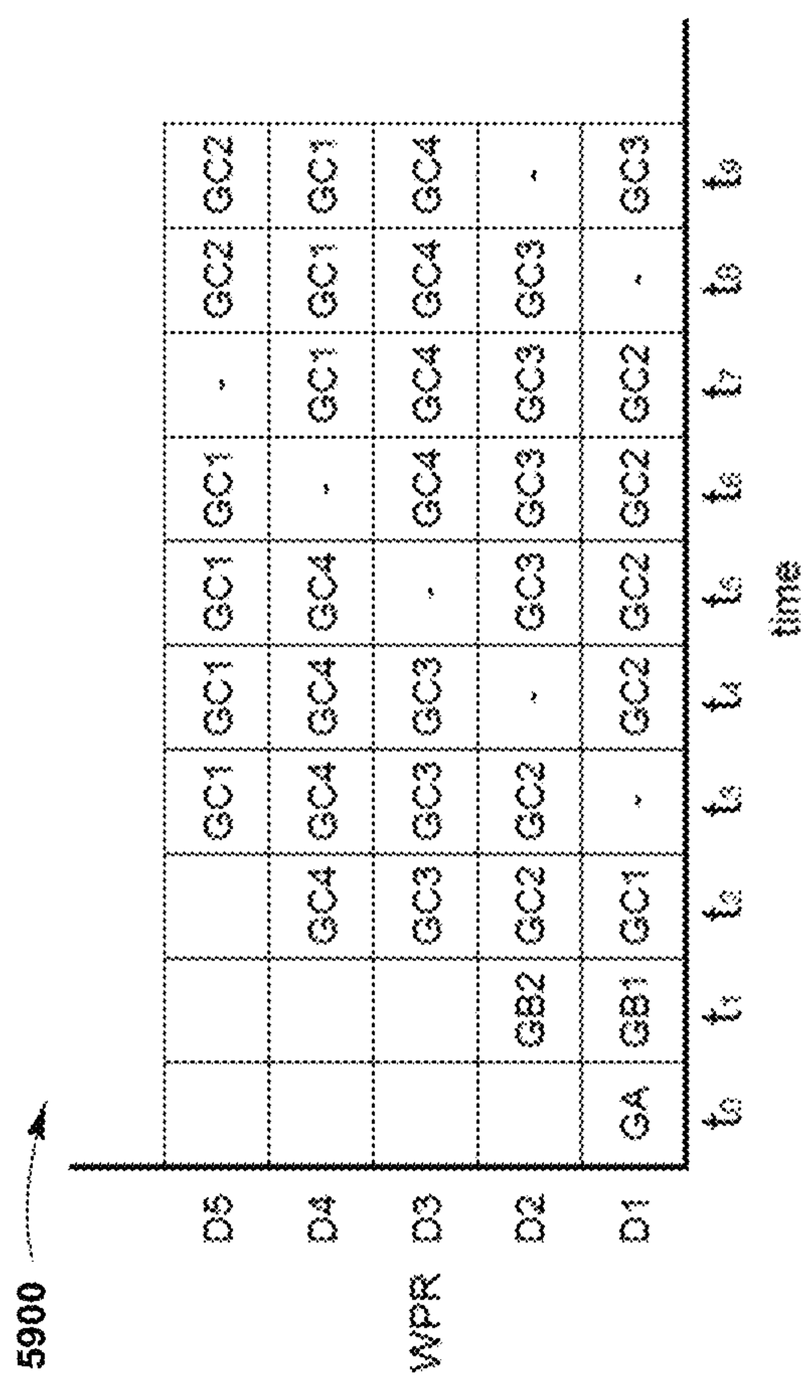

t_0 - Group of all antennas of transmitter.
t_1 - 2nd device D2 added. Group GB1 is for D1 and GB2 is for D2.
t_2 - D3 & D4 added, so GC3 is group for D3 and GC4 is for D4.
t_9 - Cycle pattern repeats.

FIG. 59

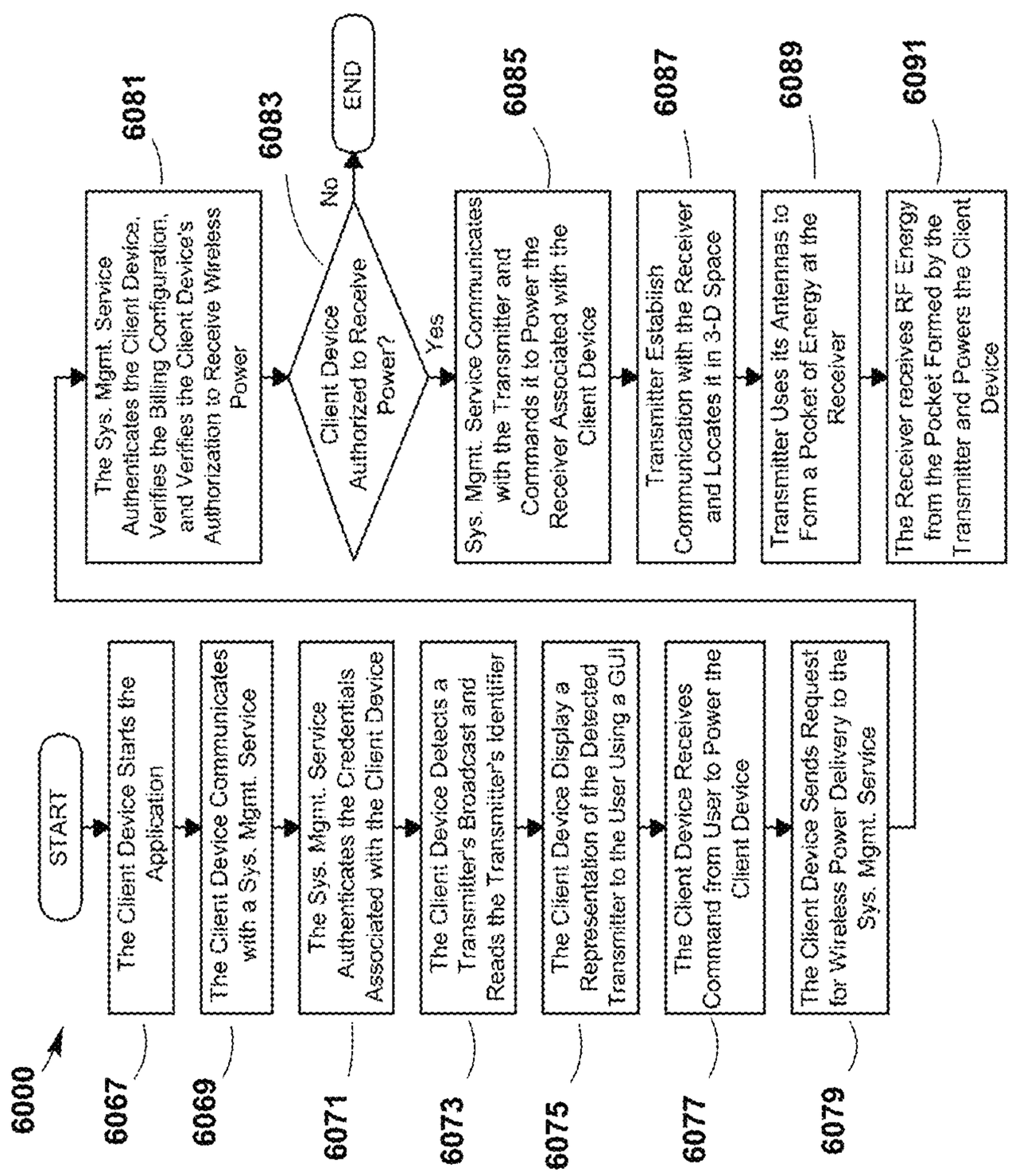
6000
START
6067
The Client Device Starts the Application
6069
The Client Device Communicates with a Sys. Mgmt. Service
6071
The Sys. Mgmt. Service Authenticates the Credentials Associated with the Client Device
6073
The Client Device Detects a Transmitter's Broadcast and Reads the Transmitter's Identifier
6075
The Client Device Display a Representation of the Detected Transmitter to the User Using a GUI
6077
The Client Device Receives Command from User to Power the Client Device
6079
The Client Device Sends Request for Wireless Power Delivery to the Sys. Mgmt. Service
6081
The Sys. Mgmt. Service Authenticates the Client Device, Verifies the Billing Configuration, and Verifies the Client Device's Authorization to Receive Wireless Power
6083
Client Device Authorized to Receive Power?
No
END
Yes
6085
Sys. Mgmt. Service Communicates with the Transmitter and Commands it to Power the Receiver Associated with the Client Device
6087
Transmitter Establish Communication with the Receiver and Locates it in 3-D Space
6089
Transmitter Uses its Antennas to Form a Pocket of Energy at the Receiver
6091
The Receiver receives RF Energy from the Pocket Formed by the Transmitter and Powers the Client Device

FIG. 60

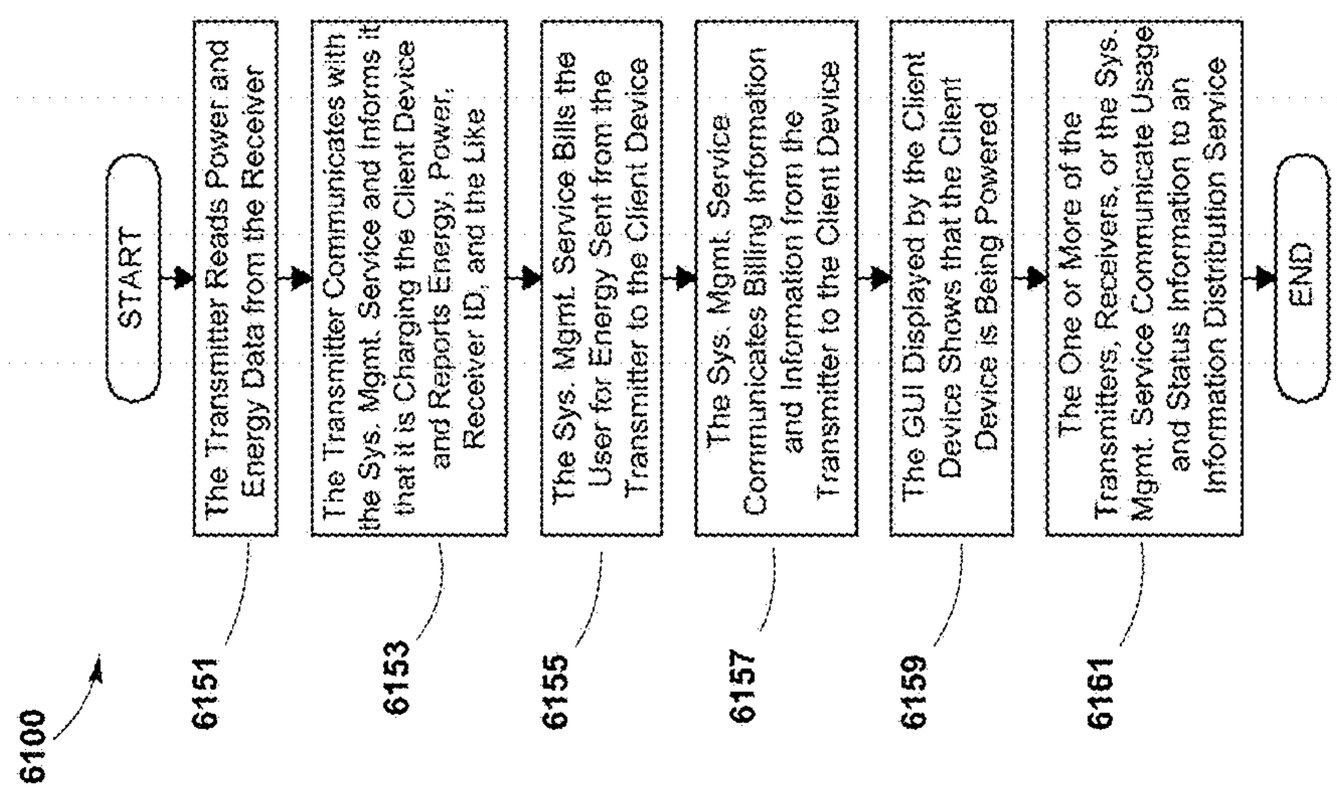
6100
START
6151
The Transmitter Reads Power and Energy Data from the Receiver
6153
The Transmitter Communicates with the Sys. Mgmt. Service and Informs it that it is Charging the Client Device and Reports Energy, Power, Receiver ID, and the Like
6155
The Sys. Mgmt. Service Bills the User for Energy Sent from the Transmitter to the Client Device
6157
The Sys. Mgmt. Service Communicates Billing Information and Information from the Transmitter to the Client Device
6159
The GUI Displayed by the Client Device Shows that the Client Device is Being Powered
6161
The One or More of the Transmitters, Receivers, or the Sys. Mgmt. Service Communicate Usage and Status Information to an Information Distribution Service
END

FIG. 61

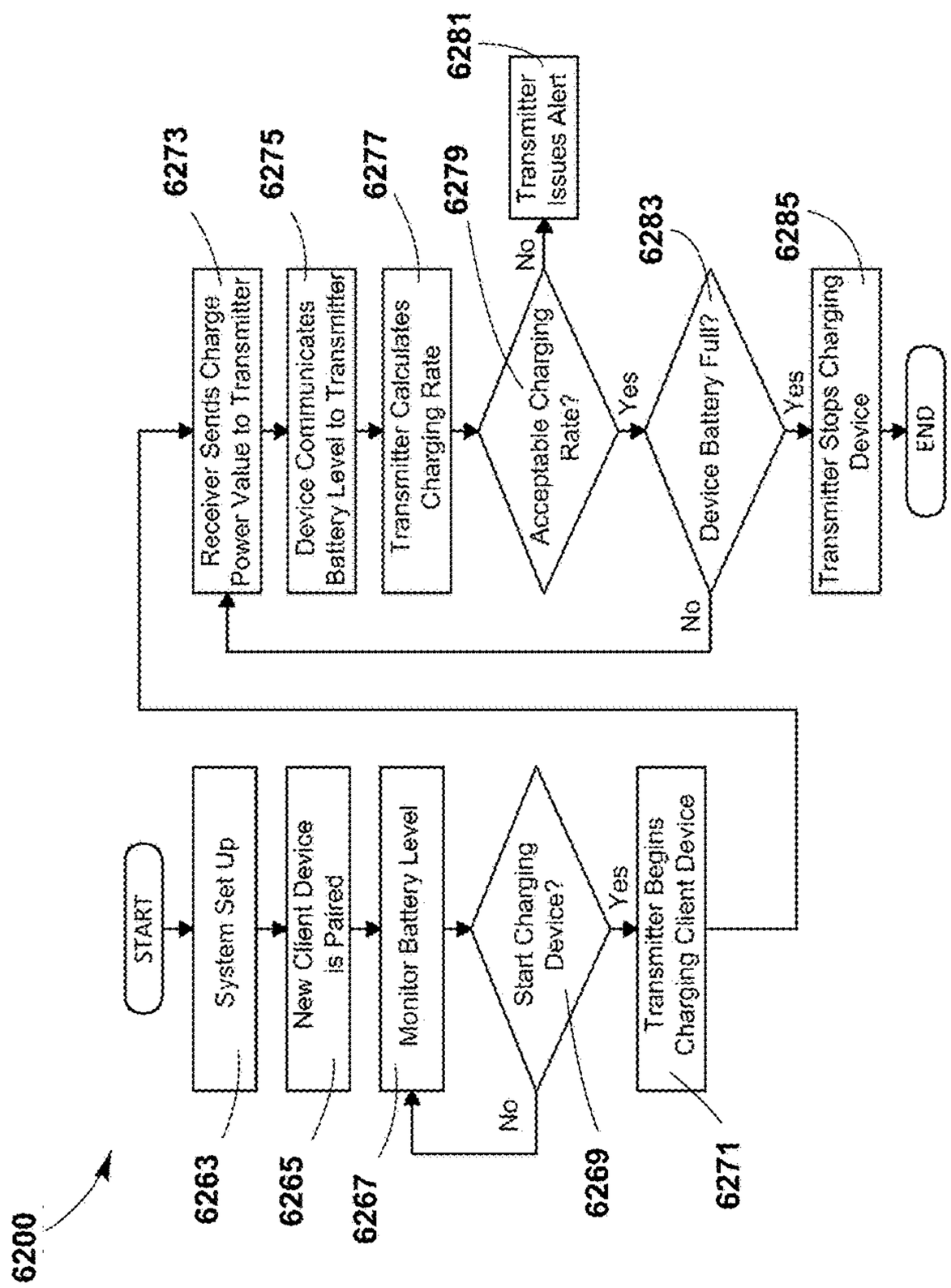
6200
START
System Set Up
6263
New Client Device is Paired
6265
Monitor Battery Level
6267
Start Charging Device?
6269
No
Yes
Transmitter Begins Charging Client Device
6271
Receiver Sends Charge Power Value to Transmitter
6273
Device Communicates Battery Level to Transmitter
6275
Transmitter Calculates Charging Rate
6277
Acceptable Charging Rate?
6279
No
Yes
Transmitter Issues Alert
6281
Device Battery Full?
6283
No
Yes
Transmitter Stops Charging Device
6285
END

FIG. 62

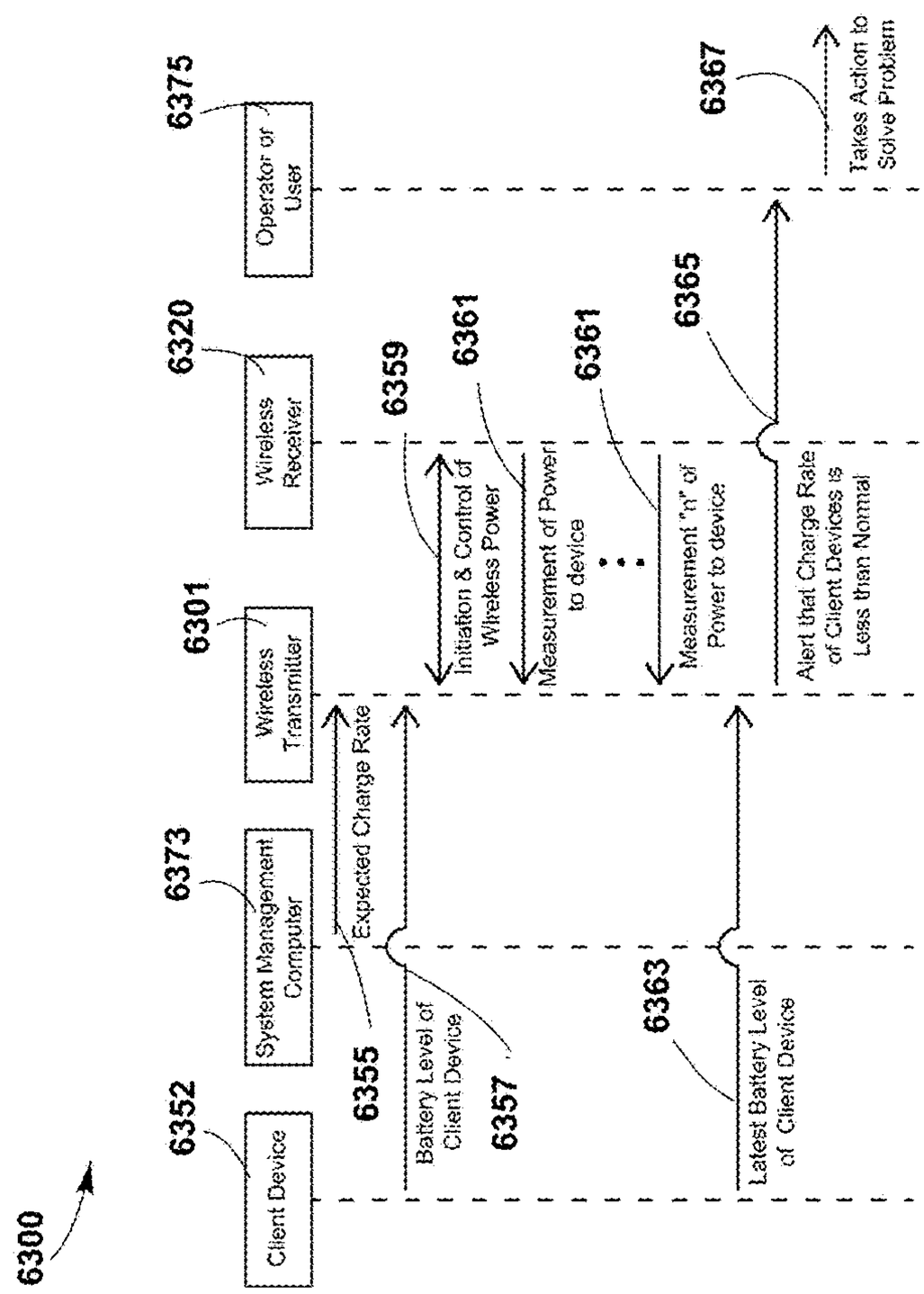
6300
Client Device
6352
System Management Computer
6373
Wireless Transmitter
6301
Wireless Receiver
6320
Operator or User
6375
Expected Charge Rate
6355
Battery Level of Client Device
6357
Latest Battery Level of Client Device
6363
Initiation & Control of Wireless Power
6359
Measurement of Power to device
6361
Measurement "n" of Power to device
6361
Alert that Charge Rate of Client Devices is Less than Normal
6365
Takes Action to Solve Problem
6367

FIG. 63

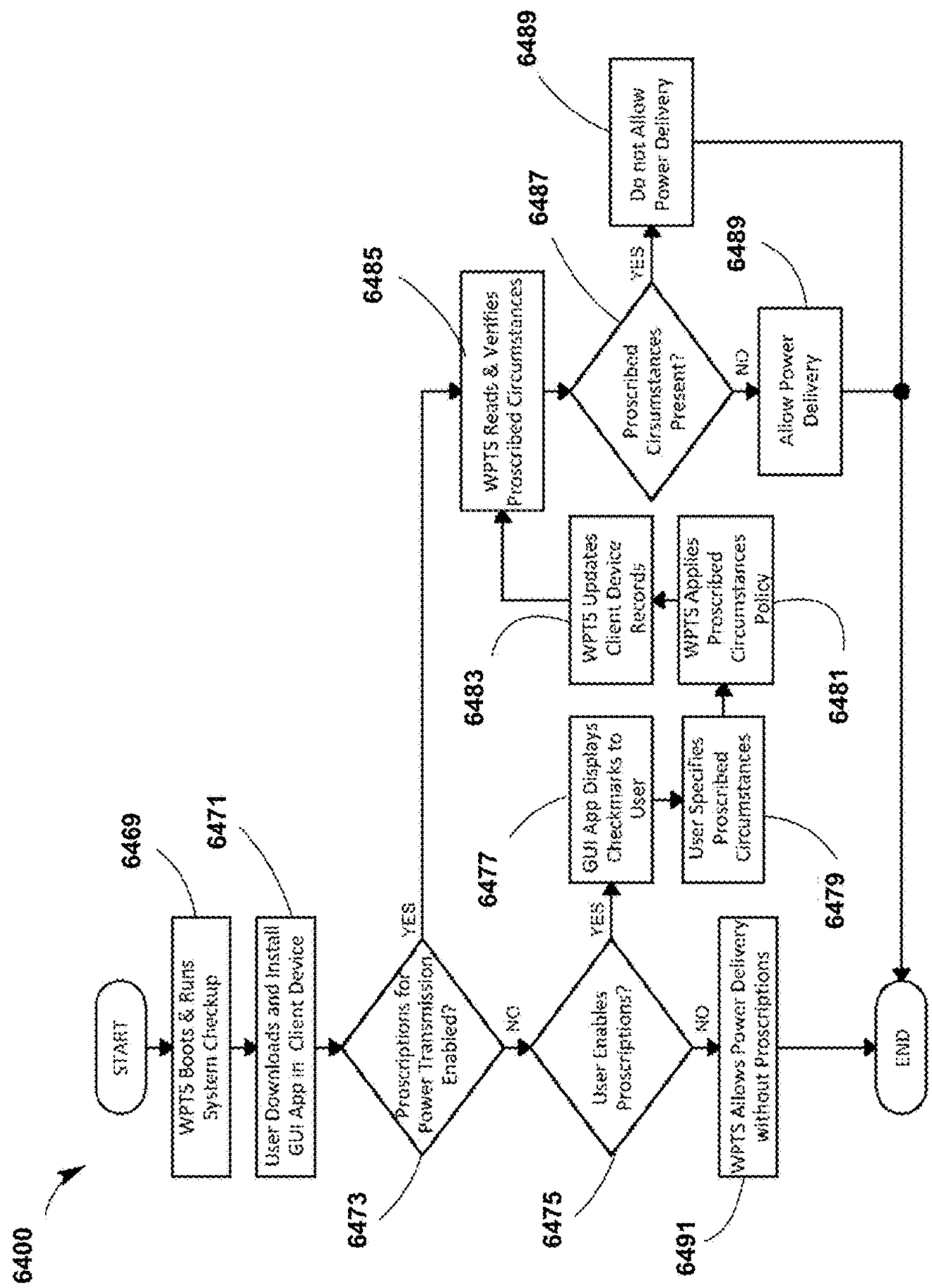
6400
START
6469
WPTS Boots & Runs System Checkup
6471
User Downloads and Install GUI App in Client Device
6473
Proscriptions for Power Transmission Enabled?
YES
NO
6475
User Enables Proscriptions?
YES
NO
6477
GUI App Displays Checkmarks to User
6479
User Specifies Proscribed Circumstances
6481
WPTS Applies Proscribed Circumstances Policy
6483
WPTS Updates Client Device Records
6485
WPTS Reads & Verifies Proscribed Circumstances
6487
Proscribed Circumstances Present?
YES
NO
6489
Do not Allow Power Delivery
6489
Allow Power Delivery
6491
WPTS Allows Power Delivery without Proscriptions
END

FIG. 64

SYSTEM AND METHOD FOR PROVIDING HEALTH SAFETY IN A WIRELESS POWER TRANSMISSION SYSTEM

CROSS-REFERENCE TO RELATED APPLICATIONS

This application is a continuation-in-part application of U.S. Non-Provisional patent application Ser. No. 14/330,939, filed Jul. 14, 2014, entitled "System and Method for Providing Health Safety in a Wireless Power Transmission System," which is hereby incorporated by reference in its entirety.

This application relates to U.S. Non-Provisional patent application Ser. No. 14/583,625, filed Dec. 27, 2014, entitled "Receivers for Wireless Power Transmission," U.S. Non-Provisional patent application Ser. No. 14/583,630, filed Dec. 27, 2014, entitled "Methodology for Pocket-Forming," U.S. Non-Provisional patent application Ser. No. 14/583,634, filed Dec. 27, 2014, entitled "Transmitters for Wireless Power Transmission," U.S. Non-Provisional patent application Ser. No. 14/583,640, filed Dec. 27, 2014, entitled "Methodology for Multiple Pocket-Forming," U.S. Non-Provisional patent application Ser. No. 14/583,641, filed Dec. 27, 2014, entitled "Wireless Power Transmission with Selective Range," U.S. Non-Provisional patent application Ser. No. 14/583,643, filed Dec. 27, 2014, entitled "Method for 3 Dimensional Pocket-Forming," all of which are incorporated herein by reference in their entirety.

TECHNICAL FIELD

The present disclosure relates generally to wireless power transmission.

BACKGROUND

Portable electronic devices such as smart phones, tablets, notebooks and other electronic devices have become an everyday need in the way we communicate and interact with others. The frequent use of these devices may require a significant amount of power, which may easily deplete the batteries attached to these devices. Therefore, a user is frequently needed to plug in the device to a power source, and recharge such device. This may require having to charge electronic equipment at least once a day, or in high-demand electronic devices more than once a day.

Such an activity may be tedious and may represent a burden to users. For example, a user may be required to carry chargers in case his electronic equipment is lacking power. In addition, users have to find available power sources to connect to. Lastly, users must plugin to a wall or other power supply to be able to charge his or her electronic device. However, such an activity may render electronic devices inoperable during charging.

Current solutions to this problem may include devices having rechargeable batteries. However, the aforementioned approach requires a user to carry around extra batteries, and also make sure that the extra set of batteries is charged. Solar-powered battery chargers are also known, however, solar cells are expensive, and a large array of solar cells may be required to charge a battery of any significant capacity. Other approaches involve a mat or pad that allows charging of a device without physically connecting a plug of the device to an electrical outlet, by using electromagnetic signals. In this case, the device still requires to be placed in a certain location for a period of time in order to be charged.

Assuming a single source power transmission of electromagnetic (EM) signal, an EM signal power gets reduced by a factor proportional to $1/r^2$ over a distance r, in other words, it is attenuated proportional to the square of the distance. Thus, the received power at a large distance from the EM transmitter is a small fraction of the power transmitted. To increase the power of the received signal, the transmission power would have to be boosted. Assuming that the transmitted signal has an efficient reception at three centimeters from the EM transmitter, receiving the same signal power over a useful distance of three meters would entail boosting the transmitted power by 10,000 times. Such power transmission is wasteful, as most of the energy would be transmitted and not received by the intended devices, it could be hazardous to living tissue, it would most likely interfere with most electronic devices in the immediate vicinity, and it may be dissipated as heat.

In yet another approach such as directional power transmission, it would generally require knowing the location of the device to be able to point the signal in the right direction to enhance the power transmission efficiency. However, even when the device is located, efficient transmission is not guaranteed due to reflections and interference of objects in the path or vicinity of the receiving device. In addition, in many use cases the device is not stationary, which is an added difficulty.

SUMMARY

The embodiments described herein include a transmitter that transmits a power transmission signal (e.g., radio frequency (RF) signal waves) to create a three-dimensional pocket of energy. At least one receiver can be connected to or integrated into electronic devices and receive power from the pocket of energy. The transmitter can locate the at least one receiver in a three-dimensional space using a communication medium (e.g., Bluetooth technology). The transmitter generates a waveform to create a pocket of energy around each of the at least one receiver. The transmitter uses an algorithm to direct, focus, and control the waveform in three dimensions. The receiver can convert the transmission signals (e.g., RF signals) into electricity for powering an electronic device and/or for charging a battery. Accordingly, the embodiments for wireless power transmission can allow powering and charging a plurality of electrical devices without wires.

In one embodiment, a method for controlling wireless transmission of three-dimensional pockets of energy using pocket forming may comprise: receiving, by a receiver, data relating to an electronic device coupled to the receiver, wherein the data comprises an electronic device characteristic; processing, by the receiver, the data relating to the electronic device coupled to the receiver and determining when the data comprises an electronic device characteristic; and transmitting, by the receiver, an operational command based on the electronic device characteristic to one or more power transmitters configured to transmit power transmission waves that converge to form a three-dimensional pocket of energy in response to processing the wireless power data.

In yet another embodiment, a system may comprise: a receiver configured to: receive data relating to an electronic device coupled to the receiver, wherein the data comprises an electronic device characteristic; process the data relating to the electronic device coupled to the receiver and determining when the data comprises an electronic device characteristic; and transmit an operational command based on the electronic device characteristic to one or more power

transmitters configured to transmit power transmission waves that converge to form a three-dimensional pocket of energy in response to processing the wireless power data.

Additional features and advantages of an embodiment will be set forth in the description which follows, and in part will be apparent from the description. The objectives and other advantages of the invention will be realized and attained by the structure particularly pointed out in the exemplary embodiments in the written description and claims hereof as well as the appended drawings.

It is to be understood that both the foregoing general description and the following detailed description are exemplary and explanatory and are intended to provide further explanation of the invention as claimed.

BRIEF DESCRIPTION OF THE DRAWINGS

Non-limiting embodiments of the present disclosure are described by way of example with reference to the accompanying figures which are schematic and are not intended to be drawn to scale. Unless indicated as representing the background art, the figures represent aspects of the disclosure.

FIG. **1** illustrates a system overview, according to an exemplary embodiment.

FIG. **2** illustrates steps of wireless power transmission, according to an exemplary embodiment.

FIG. **3** illustrates an architecture for wireless power transmission, according to an exemplary embodiment.

FIG. **4** illustrates components of a system of wireless power transmission using pocket-forming procedures, according to an exemplary embodiment.

FIG. **5** illustrates steps of powering a plurality of receiver devices, according to an exemplary embodiment.

FIG. **6**A illustrates waveforms for wireless power transmission with selective range, which may get unified in single waveform.

FIG. **6**B illustrates waveforms for wireless power transmission with selective range, which may get unified in single waveform.

FIG. **7** illustrates wireless power transmission with selective range, where a plurality of pockets of energy may be generated along various radii from transmitter.

FIG. **8** illustrates wireless power transmission with selective range, where a plurality of pockets of energy may be generated along various radii from transmitter.

FIGS. **9**A and **9**B illustrate a diagram of an architecture for wirelessly charging client computing platform, according to an exemplary embodiment

FIG. **10**A illustrates wireless power transmission using multiple pocket-forming, according to an exemplary embodiment.

FIG. **10**B illustrates multiple adaptive pocket-forming, according to an exemplary embodiment.

FIG. **11** illustrates a diagram of a system architecture for wirelessly charging client devices, according to an exemplary embodiment.

FIG. **12** illustrates a method for determining receiver location using antenna element, according to an exemplary embodiment.

FIG. **13**A illustrates an array subset configuration, according to an exemplary embodiment.

FIG. **13**B illustrates an array subset configuration, according to an exemplary embodiment.

FIG. **14** illustrates a flat transmitter, according to an exemplary embodiment.

FIG. **15**A illustrates a transmitter, according to an exemplary embodiment.

FIG. **15**B illustrates a box transmitter, according to an exemplary embodiment.

FIG. **16** illustrates a diagram of an architecture for incorporating transmitter into different devices, according to an exemplary embodiment.

FIG. **17** illustrates a transmitter configuration according to an exemplary embodiment.

FIG. **18**A illustrates multiple rectifiers connected in parallel to an antenna element, according to an exemplary embodiment.

FIG. **18**B illustrates multiple antenna elements connected in parallel to a rectifier, according to an exemplary embodiment.

FIG. **19**A illustrates multiple antenna elements outputs combined and connected to parallel rectifiers, according to an exemplary embodiment.

FIG. **19**B illustrates groups of antenna elements connected to different rectifiers, according to an exemplary embodiment.

FIG. **20**A illustrates a device with an embedded receiver, according to an exemplary embodiment.

FIG. **20**B illustrates a battery with an embedded receiver, according to an exemplary embodiment.

FIG. **20**C illustrates external hardware that may be attached to a device, according to an exemplary embodiment.

FIG. **21**A illustrates hardware in the form of case, according to an exemplary embodiment.

FIG. **21**B illustrates hardware in the form of a printed film or flexible printed circuit board, according to an exemplary embodiment.

FIG. **22** illustrates internal hardware according to an exemplary embodiment.

FIG. **23** illustrates a portable transmitter with a power plug which may connect a portable wireless transmitter to one or more power outlets, according to an exemplary embodiment.

FIG. **24** illustrates a transmitter where a plurality of power plugs connect a portable wireless transmitter to a variety of power sources and/or electric adapters, according to an exemplary embodiment.

FIG. **25** illustrates a wireless power transmission system where a transmitter may include a button which upon activation may create at least one pocket of energy, according to an exemplary embodiment.

FIG. **26** illustrates a block diagram of an enhanced wireless power transmitter which may be used for wireless power transmission, according to an embodiment.

FIG. **27** illustrates a transmitter arrangement of antenna elements which may be coupled to a dedicated receiving radio frequency integrated circuit (RFIC), according to an embodiment.

FIG. **28** illustrates a block diagram of a dedicated receiving RFIC in an enhanced wireless power transmitter, according to an embodiment.

FIG. **29** illustrates a component level embodiment for a wireless power system including three transmitters, according to an exemplary embodiment.

FIG. **30** illustrates a wireless power system including two transmitters in two different rooms, according to an exemplary embodiment.

FIG. **31** illustrates a wireless power system including two transmitters plugged into light sockets in two different rooms, according to an exemplary embodiment.

FIG. **32** illustrates an internal hardware used as a receiver and embedded within a smartphone case, according to an exemplary embodiment.

FIG. **33** illustrates a block diagram of receiver which can be used for wireless powering or charging one or more electronic devices, according to an exemplary embodiment.

FIG. **34** illustrates a power conversion process that may be implemented in a receiver during wireless power transmission, according to an exemplary embodiment.

FIG. **35** illustrates a system architecture diagram, according an exemplary embodiment.

FIG. **36** illustrates an exemplary embodiment of a wireless power network including a transmitter and wireless receivers, according to an exemplary embodiment.

FIG. **37** illustrates a wireless power transmission system network, according to an embodiment.

FIG. **38** illustrates a wireless power transmission system architecture, according to an exemplary embodiment.

FIG. **39** illustrates an exemplary computing device in which one or more embodiments of the implementation may operate, according to an exemplary embodiment.

FIG. **40** illustrates a wireless energy transmission system for transmitting wireless energy using adaptive 3-D pocket-forming techniques, according to an exemplary embodiment.

FIG. **41** illustrates a flowchart of a pairing process, according to an exemplary embodiment.

FIG. **42** illustrates a flowchart of an un-pairing process, according to an exemplary embodiment.

FIG. **43** illustrates a tracking and positioning flowchart, according to an exemplary embodiment.

FIG. **44**A illustrates wireless power transmission where a cellphones receives charge and/or power at low efficiency, according to an exemplary embodiment.

FIG. **44**B illustrates wireless power transmission where a cellphones receives charge and/or power at low efficiency, according to an exemplary embodiment.

FIG. **45** illustrates a flowchart of a charge request process, according to an exemplary embodiment.

FIG. **46** illustrates an example routine that may be utilized by a micro-controller from transmitter to authenticate devices requiring wireless power transmission, according to an embodiment.

FIG. **47** illustrates an example routine that may be utilized by a micro-controller from transmitter to deliver power to devices previously authenticated in the routine, according to an embodiment.

FIG. **48** illustrates a transmitter creating at least one pocket of energy on a portable mat which may further re-direct power to other receiving devices, according to an exemplary embodiment.

FIG. **49**A illustrates a wireless power transmission system including a tracer which may serve for establishing desired locations for the generation of pockets of energy over at least one receiving device, according to an exemplary embodiment.

FIG. **49**B illustrates a wireless power transmission including a tracer which may serve for establishing desired locations for the generation of pockets of energy over at least one receiving device, according to an exemplary embodiment.

FIG. **50** illustrates a wireless power transmission including a tracer which may serve for establishing desired locations for the generation of pockets of energy over a plurality of receiving devices, according to an exemplary embodiment.

FIG. **51** illustrates a flowchart showing a method for automatically assigning subsets of antenna arrays for simultaneously powering two or more client devices, according to an exemplary embodiment.

FIG. **52** illustrates a flowchart of an exemplary routine that may be utilized by wireless power management software, which may be initiated by system management GUI to command system to charge one or more client devices, according to an exemplary embodiment.

FIG. **53** illustrates a flowchart of a process to power a plurality of client devices using a time division multiplexing (TDM) method in a wireless power transmission system, according to an embodiment.

FIG. **54** illustrates a flowchart of a process for adjusting the numbers of antennas assigned to a wireless power receiver so power transmission from a wireless power transmitter to a receiver is more balanced, according to an exemplary embodiment.

FIG. **55**A illustrates a block diagram of a transmitter which may be utilized for wireless power transmission, according to an exemplary embodiment.

FIG. **55**B illustrates an exemplary illustration of a flat panel antenna array that may be used in transmitter, according to an exemplary embodiment.

FIG. **56**A illustrates a single array where all antenna elements may operate at 5.8 GHz, according to an exemplary embodiment.

FIG. **56**B illustrates pair array, where the top half of antenna elements may operate at 5.8 GHz and the bottom half may operate at 2.4 GHz, according to an exemplary embodiment.

FIG. **56**C illustrates a quad array where each antenna element may be virtually divided to avoid power losses during wireless power transmission, according to an exemplary embodiment.

FIG. **57** illustrates a chart depicting an exemplary distribution of communication channels over time, employing TDM in wireless power transmission, according to an exemplary embodiment.

FIG. **58** illustrates a diagram of an exemplary potential interaction between wireless power receivers and wireless power transmitters, according to some embodiments.

FIG. **59** illustrates a diagram or exemplary potential interaction of wireless power receivers and wireless power transmitters that may be part of wireless power transmission system architecture, according to an exemplary embodiment.

FIG. **60** illustrates a flow diagram generally illustrating an exemplary method for transmitting wireless power to a device, according to an exemplary embodiment.

FIG. **61** illustrates a flow diagram generally illustrating an exemplary method for monitoring wireless power transmitted to a device, according to an exemplary embodiment.

FIG. **62** illustrates a flowchart of a method for monitoring battery performance in a wireless power transmission system, according to an exemplary embodiment.

FIG. **63** illustrates a sequence diagram of a method for monitoring battery performance, according to an exemplary embodiment.

FIG. **64** illustrates a flowchart of a method for proscribing client devices from receiving power from a wireless power transmission system, based on proscribed circumstances of health safety, according to an exemplary embodiment.

DETAILED DESCRIPTION

The present disclosure is here described in detail with reference to embodiments illustrated in the drawings, which

form a part here. Other embodiments may be used and/or other changes may be made without departing from the spirit or scope of the present disclosure. The illustrative embodiments described in the detailed description are not meant to be limiting of the subject matter presented here. Furthermore, embodiments described herewithin can be combined to form additional embodiments without departing from the spirit or scope of the invention.

Reference will now be made to the exemplary embodiments illustrated in the drawings, and specific language will be used here to describe the same. It will nevertheless be understood that no limitation of the scope of the invention is thereby intended. Alterations and further modifications of the inventive features illustrated here, and additional applications of the principles of the inventions as illustrated here, which would occur to one skilled in the relevant art and having possession of this disclosure, are to be considered within the scope of the invention.

I. Systems and Methods for Wireless Power Transmissions

A. Components of System Embodiment

FIG. **1** shows a system **100** for wireless power transmission by forming pockets of energy **104**. The system **100** may comprise transmitters **101**, receivers **103**, client devices **105**, and pocket detectors **107**. Transmitters **101** may transmit power transmission signals comprising power transmission waves, which may be captured by receivers **103**. The receivers **103** may comprise antennas, antenna elements, and other circuitry (detailed later), which may convert the captured waves into a useable source of electrical energy on behalf of client devices **105** associated with the receivers **103**. In some embodiments, transmitters **101** may transmit power transmission signals, made up of power transmission waves, in one or more trajectories by manipulating the phase, gain, and/or other waveform features of the power transmission waves, and/or by selecting different transmit antennas. In such embodiments, the transmitters **101** may manipulate the trajectories of the power transmission signals so that the underlying power transmission waves converge at a location in space, resulting in certain forms of interference. One type of interference generated at the convergence of the power transmission waves, "constructive interference," may be a field of energy caused by the convergence of the power transmission waves such that they add together and strengthen the energy concentrated at that location—in contrast to adding together in a way to subtract from each other and diminish the energy concentrated at that location, which is called "destructive interference". The accumulation of sufficient energy at the constructive interference may establish a field of energy, or "pocket of energy" **104**, which may be harvested by the antennas of a receiver **103**, provided the antennas are configured to operate on the frequency of the power transmission signals. Accordingly, the power transmission waves establish pockets of energy **104** at the location in space where the receivers **103** may receive, harvest, and convert the power transmission waves into useable electrical energy, which may power or charge associated electrical client devices **105**. Detectors **107** may be devices comprising a receiver **103** that are capable of producing a notification or alert in response to receiving power transmission signals. As an example, a user searching for the optimal placement of a receiver **103** to charge the user's client device **105** may use a detector **107** that comprises an LED light **108**, which may brighten when the detector **107** captures the power transmission signals from a single beam or a pocket of energy **104**.

1. Transmitters

The transmitter **101** may transmit or broadcast power transmission signals to a receiver **103** associated with a device **105**. Although several of the embodiments mentioned below describe the power transmission signals as radio frequency (RF) waves, it should be appreciated that the power transmission signals may be physical media that is capable of being propagated through space, and that is capable of being converted into a source of electrical energy **103**. The transmitter **101** may transmit the power transmission signals as a single beam directed at the receivers **103**. In some cases, one or more transmitters **101** may transmit a plurality of power transmission signals that are propagated in a multiple directions and may deflect off of physical obstructions (e.g., walls). The plurality of power transmission signals may converge at a location in a three-dimensional space, forming a pocket of energy **104**. Receivers **103** within the boundaries of an energy pocket **104** may capture and covert the power transmission signals into a useable source of energy. The transmitter **101** may control pocket-forming based on phase and/or relative amplitude adjustments of power transmission signals, to form constructive interference patterns.

Although the exemplary embodiment recites the use of RF wave transmission techniques, the wireless charging techniques should not be limited to RF wave transmission techniques. Rather, it should be appreciated that possible wireless charging techniques may include any number of alternative or additional techniques for transmitting energy to a receiver converting the transmitted energy to electrical power. Non-limiting exemplary transmission techniques for energy that can be converted by a receiving device into electrical power may include: ultrasound, microwave, resonant and inductive magnetic fields, laser light, infrared, or other forms of electromagnetic energy. In the case of ultrasound, for example, one or more transducer elements may be disposed so as to form a transducer array that transmits ultrasound waves toward a receiving device that receives the ultrasound waves and converts them to electrical power. In the case of resonant or inductive magnetic fields, magnetic fields are created in a transmitter coil and converted by a receiver coil into electrical power. In addition, although the exemplary transmitter **101** is shown as a single unit comprising potentially multiple transmitters (transmit array), both for RF transmission of power and for other power transmission methods mentioned in this paragraph, the transmit arrays can comprise multiple transmitters that are physically spread around a room rather than being in a compact regular structure.

The transmitter includes an antenna array where the antennas are used for sending the power transmission signal. Each antenna sends power transmission waves where the transmitter applies a different phase and amplitude to the signal transmitted from different antennas. Similar to the formation of pockets of energy, the transmitter can form a phased array of delayed versions of the signal to be transmitted, then applies different amplitudes to the delayed versions of the signal, and then sends the signals from appropriate antennas. For a sinusoidal waveform, such as an RF signal, ultrasound, microwave, or others, delaying the signal is similar to applying a phase shift to the signal.

2. Pockets of Energy

A pocket of energy **104** may be formed at locations of constructive interference patterns of power transmission signals transmitted by the transmitter **101**. The pockets of energy **104** may manifest as a three-dimensional field where energy may be harvested by receivers **103** located within the pocket of energy **104**. The pocket of energy **104** produced by

transmitters **101** during pocket-forming may be harvested by a receiver **103**, converted to an electrical charge, and then provided to electronic client device **105** associated with the receiver **103** (e.g., laptop computer, smartphone, rechargeable battery). In some embodiments, there may be multiple transmitters **101** and/or multiple receivers **103** powering various client devices **105**. In some embodiments, adaptive pocket-forming may adjust transmission of the power transmission signals in order to regulate power levels and/or identify movement of the devices **105**.

3. Receivers

A receiver **103** may be used for powering or charging an associated client device **105**, which may be an electrical device coupled to or integrated with the receiver **103**. The receiver **103** may receive power transmission waves from one or more power transmission signals originating from one or more transmitters **101**. The receiver **103** may receive the power transmission signals as a single beam produced by the transmitter **101**, or the receiver **103** may harvest power transmission waves from a pocket of energy **104**, which may be a three-dimensional field in space resulting from the convergence of a plurality of power transmission waves produced by one or more transmitters **101**. The receiver **103** may comprise an array of antennas **112** configured to receive power transmission waves from a power transmission signal and harvest the energy from the power transmission signals of the single beam or pocket of energy **104**. The receiver **103** may comprise circuitry that then converts the energy of the power transmission signals (e.g., the radio frequency electromagnetic radiation) to electrical energy. A rectifier of the receiver **103** may translate the electrical energy from AC to DC. Other types of conditioning may be applied, as well. For example, a voltage conditioning circuit may increase or decrease the voltage of the electrical energy as required by the client device **105**. An electrical relay may then convey the electrical energy from the receiver **103** to the client device **105**.

In some embodiments, the receiver **103** may comprise a communications component that transmits control signals to the transmitter **101** in order to exchange data in real-time or near real-time. The control signals may contain status information about the client device **105**, the receiver **103**, or the power transmission signals. Status information may include, for example, present location information of the device **105**, amount of charge received, amount of charged used, and user account information, among other types of information. Further, in some applications, the receiver **103** including the rectifier that it contains may be integrated into the client device **105**. For practical purposes, the receiver **103**, wire **111**, and client device **105** may be a single unit contained in a single packaging.

4. Control Signals

In some embodiments, control signals may serve as data inputs used by the various antenna elements responsible for controlling production of power transmission signals and/or pocket-forming. Control signals may be produced by the receiver **103** or the transmitter **101** using an external power supply (not shown) and a local oscillator chip (not shown), which in some cases may include using a piezoelectric material. Control signals may be RF waves or any other communication medium or protocol capable of communicating data between processors, such as Bluetooth®, RFID, infrared, near-field communication (NFC). As detailed later, control signals may be used to convey information between the transmitter **101** and the receiver **103** used to adjust the power transmission signals, as well as contain information related to status, efficiency, user data, power consumption, billing, geo-location, and other types of information.

5. Detectors

A detector **107** may comprise hardware similar to receivers **103**, which may allow the detector **107** to receive power transmission signals originating from one or more transmitters **101**. The detector **107** may be used by users to identify the location of pockets of energy **104**, so that users may determine the preferable placement of a receiver **103**. In some embodiments, the detector **107** may comprise an indicator light **108** that indicates when the detector is placed within the pocket of energy **104**. As an example, in FIG. **1**, detectors **107***a*, **107***b* are located within the pocket of energy **104** generated by the transmitter **101**, which may trigger the detectors **107***a*, **107***b* to turn on their respective indicator lights **108***a*, **108***b*, because the detectors **107***a*, **107***b* are receiving power transmission signals of the pocket of energy **104**; whereas, the indicator light **108***c* of a third detector **107***c* located outside of the pockets of energy **104**, is turned off, because the third detector **107***c* is not receiving the power transmission signals from the transmitter **101**. It should be appreciated that the functions of a detector, such as the indicator light, may be integrated into a receiver or into a client device in alternative embodiments as well.

6. Client Device

A client device **105** may be any electrical device that requires continuous electrical energy or that requires power from a battery. Non-limiting examples of client devices **105** may include laptops, mobile phones, smartphones, tablets, music players, toys, batteries, flashlights, lamps, electronic watches, cameras, gaming consoles, appliances, GPS devices, and wearable devices or so-called "wearables" (e.g., fitness bracelets, pedometers, smartwatch), among other types of electrical devices.

In some embodiments, the client device **105***a* may be a physical device distinct from the receiver **103***a* associated with the client device **105***a*. In such embodiments, the client device **105***a* may be connected to the receiver over a wire **111** that conveys converted electrical energy from the receiver **103***a* to the client device **105***a*. In some cases, other types of data may be transported over the wire **111**, such as power consumption status, power usage metrics, device identifiers, and other types of data.

In some embodiments, the client device **105***b* may be permanently integrated or detachably coupled to the receiver **103***b*, thereby forming a single integrated product or unit. As an example, the client device **105***b* may be placed into a sleeve that has embedded receivers **103***b* and that may detachably couple to the device's **105***b* power supply input, which may be typically used to charge the device's **105***b* battery. In this example, the device **105***b* may be decoupled from the receiver, but may remain in the sleeve regardless of whether or not the device **105***b* requires an electrical charge or is being used. In another example, in lieu of having a battery that holds a charge for the device **105***b*, the device **105***b* may comprise an integrated receiver **105***b*, which may be permanently integrated into the device **105***b* so as to form an indistinct product, device, or unit. In this example, the device **105***b* may rely almost entirely on the integrated receiver **103***b* to produce electrical energy by harvesting pockets of energy **104**. It should be clear to someone skilled in the art that the connection between the receiver **103** and the client device **105** may be a wire **111** or may be an electrical connection on a circuit board or an integrated circuit, or even a wireless connection, such as inductive or magnetic.

B. Method of Wireless Power Transmission

FIG. **2** shows steps of wireless power transmission, according to an exemplary method **200** embodiment.

In a first step **201**, a transmitter (TX) establishes a connection or otherwise associates with a receiver (RX). That is, in some embodiments, transmitters and receivers may communicate control data over using a wireless communication protocol capable of transmitting information between two processors of electrical devices (e.g., Bluetooth®, Bluetooth Low Energy (BLE), Wi-Fi, NFC, ZigBee®). For example, in embodiments implementing Bluetooth® or Bluetooth® variants, the transmitter may scan for receiver's broadcasting advertisement signals or a receiver may transmit an advertisement signal to the transmitter. The advertisement signal may announce the receiver's presence to the transmitter, and may trigger an association between the transmitter and the receiver. As described herein, in some embodiments, the advertisement signal may communicate information that may be used by various devices (e.g., transmitters, client devices, sever computers, other receivers) to execute and manage pocket-forming procedures. Information contained within the advertisement signal may include a device identifier (e.g., MAC address, IP address, UUID), the voltage of electrical energy received, client device power consumption, and other types of data related to power transmission. The transmitter may use the advertisement signal transmitted to identify the receiver and, in some cases, locate the receiver in a two-dimensional space or in a three-dimensional space. Once the transmitter identifies the receiver, the transmitter may establish the connection associated in the transmitter with the receiver, allowing the transmitter and receiver to communicate control signals over a second channel.

In a next step **203**, the transmitter may use the advertisement signal to determine a set of power transmission signal features for transmitting the power transmission signals, to then establish the pockets of energy. Non-limiting examples of features of power transmission signals may include phase, gain, amplitude, magnitude, and direction among others. The transmitter may use information contained in the receiver's advertisement signal, or in subsequent control signals received from the receiver, to determine how to produce and transmit the power transmission signals so that the receiver may receive the power transmission signals. In some cases, the transmitter may transmit power transmission signals in a way that establishes a pocket of energy, from which the receiver may harvest electrical energy. In some embodiments, the transmitter may comprise a processor executing software modules capable of automatically identifying the power transmission signal features needed to establish a pocket of energy based on information received from the receiver, such as the voltage of the electrical energy harvested by the receiver from the power transmission signals. It should be appreciated that the functions of the processor and the software modules may instead be implemented in an Application Specific Integrated Circuit (ASIC) also.

Additionally or alternatively, in some embodiments, the advertisement signal or subsequent signal transmitted by the receiver over a second communications channel may indicate one or more power transmission signals features, which the transmitter may then use to produce and transmit power transmission signals to establish a pocket of energy. For example, in some cases the transmitter may automatically identify the phase and gain necessary for transmitting the power transmission signals based on the location of the device and the type of device or receiver; and, in some cases, the receiver may inform the transmitter the phase and gain for effectively transmitting the power transmission signals.

In a next step **205**, after the transmitter determines the appropriate features to use when transmitting the power transmission signals, the transmitter may begin transmitting power transmission signals, over a separate channel from the control signals. Power transmission signals may be transmitted to establish a pocket of energy. The transmitter's antenna elements may transmit the power transmission signals such that the power transmission signals converge in a two-dimensional or three-dimensional space around the receiver. The resulting field around the receiver forms a pocket of energy from which the receiver may harvest electrical energy. One antenna element may be used to transmit power transmission signals to establish two-dimensional energy transmissions; and in some cases, a second or additional antenna element may be used to transmit power transmission signals in order to establish a three-dimensional pocket of energy. In some cases plurality of antenna elements may be used to transmit power transmission signals in order to establish the pocket of energy; and in some cases the plurality of antennas may include all of the antennas in the transmitter; and in some cases the plurality of antennas may include only one or more of the antennas in the transmitter, but not all.

As previously mentioned, the transmitter may produce and transmit power transmission signals, according to a determined set of power transmission signal features, which may be produced and transmitted using an external power source and a local oscillator chip comprising a piezoelectric material. The transmitter may comprise an RFIC that controls production and transmission of the power transmission signals based on information related to power transmission and pocket-forming received from the receiver. This control data may be communicated over a different channel from the power transmission signals, using wireless communications protocols, such as BLE, NFC, or ZigBee®. The RFIC of the transmitter may automatically adjust the phase and/or relative magnitudes of the power transmission signals as needed. Pocket-forming is accomplished by the transmitter transmitting the power transmission signals in a manner that forms constructive interference patterns.

Antenna elements of the transmitter may use concepts of wave interference to determine certain power transmission signals features (e.g., direction of transmission, phase of power transmission signal wave), when transmitting the power transmission signals during pocket-forming. The antenna elements may also use concepts of constructive interference to generate a pocket of energy, but may also utilize concepts of deconstructive interference to generate a transmission null in a particular physical location.

In some embodiments, the transmitter may provide power to a plurality of receivers using pocket-forming, which may require the transmitter to execute a procedure for multiple pocket-forming. A transmitter comprising a plurality of antenna elements may accomplish multiple pocket-forming by automatically computing the phase and gain of power transmission signal waves, for each antenna element of the transmitter tasked with transmitting power transmission signals the respective receivers. The transmitter may compute the phase and gains independently, because multiple wave paths for each power transmission signal may be generated by the transmitter's antenna elements to transmit the power transmission signals to the respective antenna elements of the receiver.

As an example of the computation of phase/gain adjustments for two antenna elements of the transmitter transmit-

ting two signals, say X and Y where Y is 180 degree phase shifted version of X (Y=−X). At a physical location where the cumulative received waveform is X−Y, a receiver receives X−Y=X+X=2X, whereas at a physical location where the cumulative received waveform is X+Y, a receiver receives X+Y=X−X=0.

In a next step **207**, the receiver may harvest or otherwise receive electrical energy from power transmission signals of a single beam or a pocket of energy. The receiver may comprise a rectifier and AC/DC converter, which may convert the electrical energy from AC current to DC current, and a rectifier of the receiver may then rectify the electrical energy, resulting in useable electrical energy for a client device associated with the receiver, such as a laptop computer, smartphone, battery, toy, or other electrical device. The receiver may utilize the pocket of energy produced by the transmitter during pocket-forming to charge or otherwise power the electronic device.

In next step **209**, the receiver may generate control data containing information indicating the effectiveness of the single beam or energy pockets providing the receiver power transmission signals. The receiver may then transmit control signals containing the control data, to the transmitter. The control signals may be transmitted intermittently, depending on whether the transmitter and receiver are communicating synchronously (i.e., the transmitter is expecting to receive control data from the receiver). Additionally, the transmitter may continuously transmit the power transmission signals to the receiver, irrespective of whether the transmitter and receiver are communicating control signals. The control data may contain information related to transmitting power transmission signals and/or establishing effective pockets of energy. Some of the information in the control data may inform the transmitter how to effectively produce and transmit, and in some cases adjust, the features of the power transmission signals. Control signals may be transmitted and received over a second channel, independent from the power transmission signals, using a wireless protocol capable of transmitting control data related to power transmission signals and/or pocket-forming, such as BLE, NFC, Wi-Fi, or the like.

As mentioned, the control data may contain information indicating the effectiveness of the power transmission signals of the single beam or establishing the pocket of energy. The control data may be generated by a processor of the receiver monitoring various aspects of receiver and/or the client device associated with the receiver. The control data may be based on various types of information, such as the voltage of electrical energy received from the power transmission signals, the quality of the power transmission signals reception, the quality of the battery charge or quality of the power reception, and location or motion of the receiver, among other types of information useful for adjusting the power transmission signals and/or pocket-forming.

In some embodiments, a receiver may determine the amount of power being received from power transmission signals transmitted from the transmitter and may then indicate that the transmitter should "split" or segment the power transmission signals into less-powerful power transmission signals. The less-powerful power transmission signals may be bounced off objects or walls nearby the device, thereby reducing the amount of power being transmitted directly from the transmitter to the receiver.

In a next step **211**, the transmitter may calibrate the antennas transmitting the power transmission signals, so that the antennas transmit power transmission signals having a more effective set of feature (e.g., direction, phase, gain, amplitude). In some embodiments, a processor of the transmitter may automatically determine more effective features for producing and transmitting the power transmission signals based on a control signal received from the receiver. The control signal may contain control data, and may be transmitted by the receiver using any number of wireless communication protocols (e.g., BLE, Wi-Fi, ZigBee®). The control data may contain information expressly indicating the more effective features for the power transmission waves; or the transmitter may automatically determine the more effective features based on the waveform features of the control signal (e.g., shape, frequency, amplitude). The transmitter may then automatically reconfigure the antennas to transmit recalibrated power transmission signals according to the newly determined more-effective features. For example, the processor of the transmitter may adjust gain and/or phase of the power transmission signals, among other features of power transmission feature, to adjust for a change in location of the receiver, after a user moved the receiver outside of the three-dimensional space where the pocket of energy is established.

C. System Architecture of Power Transmission System

FIG. **3** illustrates an architecture **300** for wireless power transmission using pocket-forming, according to an exemplary embodiment. "Pocket-forming" may refer to generating two or more power transmission waves **342** that converge at a location in three-dimensional space, resulting in constructive interference patterns at that location. A transmitter **302** may transmit and/or broadcast controlled power transmission waves **342** (e.g., microwaves, radio waves, ultrasound waves) that may converge in three-dimensional space. These power transmission waves **342** may be controlled through phase and/or relative amplitude adjustments to form constructive interference patterns (pocket-forming) in locations where a pocket of energy is intended. It should be understood also that the transmitter can use the same principles to create destructive interference in a location thereby creating a transmission null—a location where transmitted power transmission waves cancel each other out substantially and no significant energy can be collected by a receiver. In typical use cases the aiming of a power transmission signal at the location of the receiver is the objective; and in other cases it may be desirable to specifically avoid power transmission to a particular location; and in other cases it may be desirable to aim power transmission signal at a location while specifically avoiding transmission to a second location at the same time. The transmitter takes the use case into account when calibrating antennas for power transmission.

Antenna elements **306** of the transmitter **302** may operate in single array, pair array, quad array, or any other suitable arrangement that may be designed in accordance with the desired application. Pockets of energy may be formed at constructive interference patterns where the power transmission waves **342** accumulate to form a three-dimensional field of energy, around which one or more corresponding transmission null in a particular physical location may be generated by destructive interference patterns. Transmission null in a particular physical location-may refer to areas or regions of space where pockets of energy do not form because of destructive interference patterns of power transmission waves **342**.

A receiver **320** may then utilize power transmission waves **342** emitted by the transmitter **302** to establish a pocket of energy, for charging or powering an electronic device **313**, thus effectively providing wireless power transmission. Pockets of energy may refer to areas or regions of space

where energy or power may accumulate in the form of constructive interference patterns of power transmission waves **342**. In other situations there can be multiple transmitters **302** and/or multiple receivers **320** for powering various electronic equipment for example smartphones, tablets, music players, toys and others at the same time. In other embodiments, adaptive pocket-forming may be used to regulate power on electronic devices. Adaptive pocket-forming may refer to dynamically adjusting pocket-forming to regulate power on one or more targeted receivers.

Receiver **320** may communicate with transmitter **302** by generating a short signal through antenna elements **324** in order to indicate its position with respect to the transmitter **302**. In some embodiments, receiver **320** may additionally utilize a network interface card (not shown) or similar computer networking component to communicate through a network **340** with other devices or components of the system **300**, such as a cloud computing service that manages several collections of transmitters **302**. The receiver **320** may comprise circuitry **308** for converting the power transmission signals **342** captured by the antenna elements **324**, into electrical energy that may be provided to and electric device **313** and/or a battery of the device **315**. In some embodiments, the circuitry may provide electrical energy to a battery of receiver **335**, which may store energy without the electrical device **313** being communicatively coupled to the receiver **320**.

Communications components **324** may enable receiver **320** to communicate with the transmitter **302** by transmitting control signals **345** over a wireless protocol. The wireless protocol can be a proprietary protocol or use a conventional wireless protocol, such as Bluetooth®, BLE, Wi-Fi, NFC, ZigBee, and the like. Communications component **324** may then be used to transfer information, such as an identifier for the electronic device **313**, as well as battery level information, geographic location data, or other information that may be of use for transmitter **302** in determining when to send power to receiver **320**, as well as the location to deliver power transmission waves **342** creating pockets of energy. In other embodiments, adaptive pocket-forming may be used to regulate power provided to electronic devices **313**. In such embodiments, the communications components **324** of the receiver may transmit voltage data indicating the amount of power received at the receiver **320**, and/or the amount of voltage provided to an electronic device **313***b* or battery **315**.

Once transmitter **302** identifies and locates receiver **320**, a channel or path for the control signals **345** can be established, through which the transmitter **302** may know the gain and phases of the control signals **345** coming from receiver **320**. Antenna elements **306** of the transmitter **302** may start to transmit or broadcast controlled power transmission waves **342** (e.g., radio frequency waves, ultrasound waves), which may converge in three-dimensional space by using at least two antenna elements **306** to manipulate the power transmission waves **342** emitted from the respective antenna element **306**. These power transmission waves **342** may be produced by using an external power source and a local oscillator chip using a suitable piezoelectric material. The power transmission waves **342** may be controlled by transmitter circuitry **301**, which may include a proprietary chip for adjusting phase and/or relative magnitudes of power transmission waves **342**. The phase, gain, amplitude, and other waveform features of the power transmission waves **342** may serve as inputs for antenna element **306** to form constructive interference patterns (pocket-forming). In some implementations, a micro-controller **310** or other circuit of the transmitter **302** may produce a power transmission signal, which comprises power transmission waves **342**, and that may be may split into multiple outputs by transmitter circuitry **301**, depending on the number of antenna elements **306** connected to the transmitter circuitry **301**. For example, if four antenna elements **306***a-d* are connected to one transmitter circuit **301***a*, the power transmission signal will be split into four different outputs each output going to an antenna element **306** to be transmitted as power transmission waves **342** originating from the respective antenna elements **306**.

Pocket-forming may take advantage of interference to change the directionality of the antenna element **306** where constructive interference generates a pocket of energy and destructive interference generates a transmission null. Receiver **320** may then utilize pocket of energy produced by pocket-forming for charging or powering an electronic device and therefore effectively providing wireless power transmission.

Multiple pocket-forming may be achieved by computing the phase and gain from each antenna **306** of transmitter **302** to each receiver **320**.

FIG. **35** shows a wireless charging system architecture **3500**, according to an exemplary embodiment. System architecture **3500** may include one or more wireless power transmitters **3501**, and one or more wireless power receivers **3520***a* **3530***b*. In some embodiments, wireless charging system architecture **3500** may include one or more electronic devices **3552**, where electronic devices **3552** may not have a built-in wireless power receiver **3520***a*. In other embodiments, wireless charging system architecture **3500** may include electronic devices **3552** with a built-in power receiver **3520***a*. Pairing may refer to the association, within the wireless power transmission system's distributed system database, of a single electronic client device with a single power receiver, so that, for example, when a user, or automatic system process, commands a client device to be charged, the system can determine from said association which power receiver to transmit power to, to charge said client device. System database may refer to an exact copy of the system database of an installed product, or an exact copy of a subset of said database, stored within and accessible by any system computer.

Power transmitters **3501** may transmit controlled Radio Frequency (RF) waves which may converge in 3-D space. These RF waves may be controlled through phase and/or relative amplitude adjustments to form constructive interference patterns (pocket-forming). Pocket-forming may refer to generating two or more RF waves which converge in 3-D space, forming controlled constructive interference patterns. Pockets of energy may form at constructive interference patterns that may be 3-dimensional in shape whereas transmission null in a particular physical location may be generated at destructive interference patterns. Pockets of energy may refer to areas or regions of space where energy or power may accumulate in the form of constructive interference patterns of RF waves. Transmission null in a particular physical location may refer to areas or regions of space where pockets of energy do not form because of destructive interference patterns of RF waves. Adaptive pocket-forming may refer to dynamically adjusting pocket-forming to regulate power on one or more targeted receivers. Power may refer to electrical energy, where "wireless power transmission" may be synonymous of "wireless energy transmission", and "wireless power transmission" may be synonymous of "wireless energy transmission".

According to exemplary embodiments, power transmitters **3501** may include a power transmitter manager appli-

cation **3594***a*, a third party BTLE API **3512***a*, a BTLE chip **3512***b*, an antenna manager software **3593** and an antenna array **3586***a* among other components. Power transmitter manager application **3594***a* may be an executable program loaded into a non-volatile memory within a power transmitter **3501**. Power transmitter manager application **3594***a* may control the behavior of power transmitter **3501**, monitor the state of charge of electronic devices **3552**, and power receivers **3520***a*, may keep track of the location of power receivers **3520***a* and may execute power schedules, amongst others. In some embodiments, power transmitters **3501** may include a database (not shown in figure) for storing information related to power receivers **3520***a*, electronic devices **3552**, power status, power schedules, IDs, pairing and any information necessary for running the system. BTLE, or BLE, may refer to Bluetooth Low Energy communication hardware and/or software. Database may refer to a database may be a SQL file, or a file of a different format or any format, or an array of data structures within a computer's volatile or non-volatile memory but, that is used to organize, store, and retrieve data within the computer of the database. Third party BTLE API **3512***a* may enable the effective interaction between power transmitter manager application **3594***a* and BTLE chip **3512***b*. Antenna manager software **3593** may process orders from power transmitter manager application **3594***a* and may control antenna array **3586***a*.

Antenna arrays **3586***a* that may be included in power transmitters **3501** may include a number of antenna elements capable of transmitting power. In some embodiments, antenna array **3586***a* may include from 64 to 256 antenna elements which may be distributed in an equally spaced grid. In one embodiment, antenna array **3586***a* may have an 8×8 grid to have a total of 64 antenna elements. In another embodiment, antenna array **3586***a* may have a 16×16 grid to have a total of 256 antenna elements. However, the number of antenna elements may vary in relation with the desired range and power transmission capacity of power transmitter **3501**. Generally, with more antenna elements, a wider range and higher power transmission capacity may be achieved. Alternate configurations may also be possible including circular patterns or polygon arrangements, amongst others. The antenna elements of antenna array **3586***a* may include antenna types for operating in frequency bands such as 900 MHz, 2.5 GHz, 5.250 GHz, or 5.8 GHz, antenna elements may operate in independent frequencies, allowing a multi-channel operation of pocket-forming.

Power transmitter **3501** may additionally include other communications methods such as Wi-Fi, ZigBee and LAN amongst others. Power receivers **3520***a* may include a power receiver application **3594***b*, a third party BTLE API **3512***a*, a BTLE chip **3512***b*, and an antenna array **3586***b*. Power receivers **3520***a* may be capable of utilizing pockets of energy produced by power transmitter **3501** for charging or powering electronic devices **3552***a* and electronic devices **3520***b*. Power receiver application **3594***b* may be an executable program loaded into a non-volatile memory within a power receiver **3520***a*. Third party BTLE API **3512***a* may enable the effective interaction between power receiver application **3594***b* and BTLE chip **3512***b*. Antenna array **3586***b* may be capable of harvesting power from pockets of energy.

Electronic devices **3552** and electronic devices **3520***a* may include a GUI for managing their interactions within wireless charging system architecture **3500**. The GUI may be associated with an executable program loaded into a non-volatile memory. In some embodiments, electronic devices **3552** and electronic devices **3520***a* may include a database (not shown in figure) for storing information related to power receivers **3520***a*, power status, power schedules, IDs, pairing and any information necessary for running the system. System management GUI may refer to a software application program that runs on a computer in the wireless power transmission system or runs on a remote server that may be in the Internet cloud. Said system management GUI is the Graphic User Interface between system users or operators and the software within the wireless power transmission system, and used for configuration, monitoring, command, control, reporting, and any other system management functionality.

In some embodiments, wireless charging system architecture **3500** may include multiple power transmitters **3501** and/or multiple power receivers **3520***a* for charging a plurality of electronic devices **3552**. In systems including multiple power transmitters **3501**, the two or more power transmitters may be in constant communication using any communication channel available, including Bluetooth, BTLE, Wi-Fi, ZigBee, LAN, LTE and LTE direct amongst others.

FIG. **36** shows an exemplary embodiment of a wireless power transmission system **3600** (WPTS) in which one or more embodiments of the present disclosure may operate. Wireless power transmission system **3600** may include communication between one or more wireless power transmitters **3601** and one or more wireless powered receivers **3620***a* and within client device **3620***b*. Client device **3652** may be paired with an adaptable paired receiver **3620***a* that may enable wireless power transmission to the client device **3652**. In another embodiment, a client device **3620***b* may include a wireless power receiver built in as part of the hardware of the device. Client device **3652** may be any device which uses an energy power source, such as, laptop computers, stationary computers, mobile phones, tablets, mobile gaming devices, televisions, radios and/or any set of appliances that may require or benefit from an electrical power source.

In one embodiment, one or more wireless power transmitters **3601** may include a microprocessor that integrates a power transmitter manager app **3694***a* (PWR TX MGR APP) as embedded software, and a third party application programming interface **3612***a* (Third Party API) for a Bluetooth Low Energy chip **3612***b* (BTLE CHIP HW). App may refer to a software application that is run on a mobile, laptop, desktop, or server computer. Bluetooth Low Energy chip **3612***b* may enable communication between wireless power transmitter **3601** and other devices, including power receiver **3620***a*, client device **3652** and **3620***b*, and others. Wireless power transmitter **3601** may also include an antenna manager software (Antenna MGR Software) to control an RF antenna array that may be used to form controlled RF waves which may converge in 3-D space and create pockets of energy on wireless powered receivers. In some embodiments, one or more Bluetooth Low Energy chips **3612***b* may utilize other wireless communication protocols, including Wi-Fi, Bluetooth, LTE direct, or the like.

Power transmitter manager app **3694***a* may call third party application programming interface **3612***a* for running a plurality of functions, including the establishing of a connection, ending a connection, and sending data, among others. Third party application programming interface **3612***a* may issue commands to Bluetooth Low Energy chip **3612***b* according to the functions called by power transmitter manager app **3694***a*.

Power transmitter manager app **3694***a* may also include a distributed system database, which may store relevant infor-

mation associated with client device **3652**, such as their identifiers for a client device **3652**, voltage ranges for power receiver **3620***a*, location of a client device **3652**, signal strength and/or any other relevant information associated with a client device **3652**. Database may also store information relevant to the wireless power network, including receiver ID's, transmitter ID's, end-user handheld devices, system management servers, charging schedules, charging priorities and/or any other data relevant to a wireless power network.

Third party application programming interface **3612***a* at the same time may call power transmitter manager app **3694***a* through a callback function which may be registered in the power transmitter manager app **3694***a* at boot time. Third party application programming interface **3612***a* may have a timer callback that may go for ten times a second, and may send callbacks every time a connection begins, a connection ends, a connection is attempted, or a message is received.

Client device **3620***b* may include a power receiver app **3694***b* (PWR RX APP), a third party application programming interface **3650***a* (Third party API) for a Bluetooth Low Energy chip **3630***b* (BTLE CHIP HW), and an RF antenna array **3686***b* which may be used to receive and utilize the pockets of energy sent from wireless power transmitter **3601**.

Power receiver app **3694***b* may call third party application programming interface **3650***a* for running a plurality of functions, including establishing a connection, ending a connection, and sending data, among others. Third party application programming interface **3650***a* may have a timer callback that may go for ten times a second, and may send callbacks every time a connection begins, a connection ends, a connection is attempted, or message is received.

Client device **3652** may be paired to an adaptable power receiver **3620***a* via a BTLE connection **3696**. A graphical user interface (GUI **3698**) may be used to manage the wireless power network from a client device **3652**. GUI **3698** may be a software module that may be downloaded from any application store and may run on any operating system, including iOS and Android, amongst others. Client device **3652** may also communicate with wireless power transmitter **3601** via a BTLE connection **3696** to send important data, such as an identifier for the device, battery level information, geographic location data, or any other information that may be of use for wireless power transmitter **3601**.

A wireless power manager software may be used in order to manage wireless power transmission system **3600**. Wireless power manager may be a software module hosted in memory and executed by a processor inside a computing device. The wireless power manager may include a local application GUI, or host a web page GUI, from where a user may see options and statuses, as well as execute commands to manage the wireless power transmission system **3600**. The computing device, which may be cloud-based, may be connected to the wireless power transmitter **3601** through standard communication protocols, including Bluetooth, Bluetooth Low Energy, Wi-Fi, or ZigBee, amongst others. Power transmitter manager app **3694***a* may exchange information with wireless power manager in order to control access by and power transmission to client devices **3652**. Functions controlled by wireless power manager may include scheduling power transmission for individual devices, prioritizing between different client devices, accessing credentials for each client, tracking physical locations of power receivers relative to power transmitter areas, broadcasting messages, and/or any functions required to manage the wireless power transmission system **3600**.

Computing device may be connected to wireless power transmitter **3601** through network connections. Network connections may refer to any connection between computers including intranets, local area networks (LAN), virtual private networks (VPN), wireless area networks (WAN), Bluetooth, Bluetooth Low Energy, Wi-Fi, and ZigBee, among others. Power transmitter manager app **3694***a* may exchange information with wireless power manager in order to control access to power transmission by devices. Functions controlled by wireless power manager may include, scheduling power transmission for individual devices, number of antennas assigned to client devices, priorities between different client devices, access credentials for each client, physical location, broadcasting messages, and/or any functions required to manage components within wireless power transmission system **3600**.

One or more wireless power transmitters **3601** may automatically transmit power to any single wireless power receiver that is close enough for wireless power transmitters **3601** to establish a communication with. The wireless power receiver may then power or charge electrically connected electronics devices such as client device **3652**. A single wireless power transmitter **3601** may power multiple wireless power receivers simultaneously. Alternatively, components within wireless power transmission system **3600** may be configured through wireless power manager graphical user interface to automatically only transmit power to specific wireless power receivers depending on specific system criteria and/or conditions such as time of the day for automated time-based scheduled power transmission, power receiver physical location, and owner of the client device, among others.

Wireless power receivers may take energy transmitted from wireless power transmitters **3601**, into the wireless power receiver's antenna, rectify it, condition it, and sending the resulting electrical energy to the electrically connected device to power or charge the device. If any wireless power receiver moves to a different spatial location, wireless power transmitter **3601** may change number of assigned antennas, the phase, and amplitude of the transmitted RF so that the resulting energy beam stays aimed at the receiver.

FIG. **37** illustrates a wireless power transmission system network, according to an embodiment. According to some embodiments, wireless power transmission system network **3700** may include multiple wireless power transmission systems capable of communicating with a remote information service **3777** through internet cloud **3769**.

In some embodiments, wireless power transmission system may include one or more wireless power transmitters **3701**, one or more power receivers **3720**, one or more optional back-up servers **3767** and a local network **3740**. According to some embodiments, each power transmitter **3701** may include wireless power transmitter manager **3765** software and a distributed wireless power transmission system database **3763**. Each power transmitter **3701** may be capable of managing and transmitting power to one or more power receivers **3720**, where each power receiver **3720** may be capable of charging or providing power to one or more electronic devices **3761**.

Power transmitter managers **3765** may control the behavior of power transmitters **3701**, monitor the state of charge of electronic devices **3761**, and control power receivers **3720**, keep track of the location of power receivers **3720**, execute power schedules, run system check-ups, and keep

track of the energy provided to each of the different electronic devices **3761**, amongst others.

According to some embodiments, database **3763** may store relevant information from electronic devices **3761** such as, identifiers for electronic devices **3761**, voltage ranges for measurements from power receivers **3720**, location, signal strength and/or any relevant information from electronic devices **3761**. Database **3763** may also store information relevant to the wireless power transmission system such as, receiver ID's, transmitter ID's, end-user handheld device names or ID's, system management server ID's, charging schedules, charging priorities and/or any data relevant to a wireless power transmission system network **3700**. Additionally, in some embodiments, database **3763** may store data of past and present system status.

The past system status data may include details such as the amount of power delivered to an electronic device **3761**, the amount of energy that was transferred to a group of electronic devices **3761** associated with a user, the amount of time an electronic device **3761** has been associated to a wireless power transmitter **3701**, pairing records, activities within the system, any action or event of any wireless power device in the system, errors, faults, and configuration problems, among others. Past system status data may also include power schedules, names, customer sign-in names, authorization and authentication credentials, encrypted information, physical areas of system operation, details for running the system, and any other system or user-related information.

Present system status data stored in database **3763** may include the locations and/or movements in the system, configuration, pairing, errors, faults, alarms, problems, messages sent between the wireless power devices, and tracking information, among others.

According to some exemplary embodiments, databases **3763** within power transmitters **3701** may further store future system status information, where the future status of the system may be forecasted or evaluated according to historical data from past system status data and present system status data.

In some embodiments, records from all device databases **3763** in a wireless power transmission system may also be stored and periodically updated in server **3767**. In some embodiments, wireless power transmission system network **3700** may include two or more servers **3767**. In other embodiments, wireless power transmission system network **3700** may not include any servers **3767**.

In another exemplary embodiment, wireless power transmitters **3701** may further be capable of detecting failures in the wireless power transmission system. Examples of failures in power transmission system **502** may include overheating of any component, malfunction, and overload, among others. If a failure is detected by any of wireless power transmitters **3701** within the system, then the failure may be analyzed by any wireless power transmitter manager **3765** in the system. After the analysis is completed, a recommendation or an alert may be generated and reported to owner of the power transmission system or to a remote cloud-based information service, for distribution to system owner or manufacturer or supplier.

In some embodiments, power transmitters **3701** may use network **3740** to send and receive information. Network **3740** may be a local area network, or any communication system between the components of the wireless power transmission system. Network **3740** may enable communication between power transmitters, system management servers **3767** (if any), and other power transmission systems (if any), amongst others. According to some embodiments, network **3740** may facilitate data communication between power transmission system and remote information service **3777** through internet cloud **3779**.

Remote information service **3777** may be operated by the owner of the system, the manufacturer or supplier of the system, or a service provider. Remote management system may include business cloud **3775**, remote manager **3773** software, and backend server **3769**, where the remote manager **3773** may further include a general database **3771**. Functionality of backend server **3769** and remote manager **3773** can be combined into a single physical or virtual server.

General database **3771** may store additional backups of the information stored in the device databases **3763**. Additionally, general database **3771** may store marketing information, customer billing, customer configuration, customer authentication, and customer support information, among others. In some embodiments, general database **3771** may also store information, such as less popular features, errors in the system, problems report, statistics, and quality control, among others. Each wireless power transmitter **3701** may periodically establish a TCP communication connection with remote manager **3773** for authentication, problem report purposes or reporting of status or usage details, among others.

FIG. **38** illustrates a wireless power transmission system architecture **3800**, according to an exemplary embodiment. Wireless power transmission system architecture **3800** may include a wireless power transmission system, internet cloud **3879**, and a remote information service **3883**. The disclosed wireless power transmission system may include one or more wireless power transmitters **3877**, one or more wireless power receivers **3820** that may be coupled with or built into any client device **3861**, one or more local system management servers **3867** or cloud-based remote system management server **3873** (e.g., back-end servers), and a local network **3840**. Network **3840** connections may refer to any connection between computers such as intranets, local area networks (LAN), virtual private networks (VPN), wireless area networks (WAN), and the internet, among others.

According to some embodiments, each wireless power transmitter **3877** may include wireless power transmitter manager software **3865**, a distributed system database **3883**, and a TDM power transmission **3875** software module. Each wireless power transmitter **3877** may be able to manage and transmit power to one or more wireless power receivers **3820**, and each wireless power receiver **3820** may be able to charge or provide power to one or more client devices **3861**. Examples of client devices **3861** may include smartphones, tablets, music players, and toys, amongst others. Some kind of client device **3861** may run a system management GUI app. This app may be available at, downloaded, and installed from a public software app store or digital application distribution platform, such as Apple iTunes, Android Play Store and/or amazon.

According to a further embodiment, wireless power transmission system may include a system management GUI application in, run at, or run from a local system management servers **3867** or cloud-bases remote system management server **3873**, which may be used to control transmission of wireless power to specific wireless power receivers **3820** depending on system criteria or operating conditions, such as power transmission schedule, and physical location of the client device **3861**, among others.

Each wireless power transmitter manager software **3865** may be able to control the behavior of wireless power

transmitters **3877**, monitoring different aspects, such as the time at which power transmission started, the unique system identification of both wireless power transmitter **3877** and wireless power receiver **3820**, the number of devices connected, the direction angle of the antennas used, the voltage at the power receiver antennas of wireless power receiver **3820**, and the real-time communication connection between wireless power transmitter **508** and wireless power receiver **3820**, which may be used for tracking information from wireless power receiver **3820** no matter where it is located or moved, among others. Additionally, power transmitter manager software **3865** may control the usage of TDM power transmission **3875**, which may be able to put wireless power transmission system in TDM power transmission **3875** mode or not. Specifically, TDM power transmission **3875** mode may control the antennas arrays of wireless power transmitter **3877** by re-assigning to antenna groups, where each group may be used to transmit power at regular intervals of time to only those client devices **3861** that are in an online mode, while the remaining client device **3861** in an offline mode are waiting to be powered by wireless power transmitter **3877**.

Wireless power transmitter **3877** through TDM power transmission **3875** mode may turn to online a certain group of client devices **3861** coupled with wireless power receiver **3820** and may turn offline another certain group of client devices **3861** and vice versa, until all client devices **3861** that are sufficiently close to wireless power transmitter **3877** receive enough power. This TDM power transmission cycle may continue while there are too many client devices **3861** for wireless power transmitter **3877** to power all at the same time.

According to some embodiments, distributed system database **3883** may record relevant information from wireless power receivers **3820** within client devices **3861**, wireless power transmitter **3877**, and local system management servers **3867**. Information may include but is not limited to identifiers for client devices **3861**, voltage measurements of power circuits within wireless power receivers **3820**, location, signal strength, wireless power receiver **3820** ID's, wireless power transmitter **3877** ID's, end-user handheld device names ID's, system management server ID's, charging schedules, charging priorities, and/or any data relevant to wireless power transmission system. Additionally, wireless power transmitters **3877**, wireless power receiver **3820** powering client devices **3861** and local system management server **3867** may operate as system information generator.

Distributed system database **3871** may be implemented through known in the art database management systems (DBMS) such as, for example, MySQL, PostgreSQL, SQLite, Microsoft SQL Server, Microsoft Access, Oracle, SAP, dBASE, FoxPro, IBM DB2, LibreOffice Base, FileMaker Pro and/or any other type of database that may organize collections of data.

In some embodiments, wireless power transmitters **3877** may use network **3840** to send and receive information. Network **3840** may be a local area network, WIFI, or any communication system between the components of the wireless power transmission system. Network **3840** may enable communication between two or more wireless power transmitters **3877**, the communication of wireless power transmitters **3877** with system management servers **3867**, and may facilitate the communication between wireless power transmission system and remote information service **3883** through internet cloud **3879**, amongst others.

Remote information service **3883** may be operated by the owner of the system, the manufacturer, supplier of the system, or a service provider. Remote information service **3883** may include different components, such as a back-end server, a remote information service manager, and a general remote information service database.

FIG. **39** is an exemplary computing device **3900** in which one or more embodiments of the implementation may operate, according to an embodiment. In one embodiment, computing device **3900** includes bus **3995**, input/output (I/O) device **3985**, communication interface **3987**, memory **3989**, storage device **3991** and central processing unit **3993**. In another embodiment, computing device **3900** includes additional, fewer, different, or differently arranged components than those illustrated in FIG. **39**.

In FIG. **39**, bus **3995** is in physical communication with (I/O) device **3985**, communication interface **3987**, memory **3989**, storage device **3991**, and central processing unit **3993**. Bus **3995** includes a path that permits components within computing device **3900** to communicate with each other. Examples of (I/O) device **3985** include peripherals and/or other mechanism that may enable an examiner or candidate to input information to computing device **3900**, including a keyboard, computer mice, buttons, touch screens, touch-pad, voice recognition, biometric mechanisms, and the like. (I/O) device **3985** also includes a mechanism that outputs information to a user of computing device **3900**, such as, for example a display, a microphone, a light emitting diode (LED), a printer, a speaker, orientation sensors and the like. Said orientation sensors include one or more accelerometers, one or more gyroscopes, one or more compasses, and the like. The accelerometer provides a respective change of a respective angle about a respective axis. The gyroscope provides a respective rate of change of a respective angle about a respective axis and the compass provides a compass heading.

Examples of communication interface **3987** include mechanisms that enable computing device **3900** to communicate with other computing devices and/or systems through network connections. Examples of memory **3989** include random access memory (RAM), read-only memory (ROM), flash memory, and the like. Examples of storage device **3991** include magnetic and/or optical recording medium, ferroelectric RAM (F-RAM) hard disks, solid-state drives, floppy disks, optical discs, and the like. In one embodiment, memory **3989** and storage device **3991** store information and instructions for execution by central processing unit **3993**. In another embodiment, central processing unit **3993** includes a microprocessor, an application specific integrated circuit (ASIC), or a field programmable object array (FPOA), and the like. In this embodiment, central processing unit **3993** interprets and executes instructions retrieved from memory **3989** and storage device **3991**.

Examples of these implementations include servers, authorized computing devices, smartphones, desktop computers, laptop computers, tablet computers, a PDAs, another type of processor-controlled device that may receive, process, transmit digital data, and the like. Additionally, computing device **3900** may perform certain operations that are required for the proper operation of the system architecture. Suitable computing devices **3900** may perform these operations in response to central processing unit **3993** executing software instructions contained in a computer-readable medium, such as memory **3989**.

In one embodiment, the software instructions of system are read into memory **3989** from another memory location, such as storage device **3991**, or from another computing device **3900** (e.g., first client device, second client device, computing device, and the like) via communication interface

3987. In this embodiment, the software instructions contained within memory **3989** cause central processing unit **3993** to perform processes.

FIG. **40** is a functional block diagram illustrating wireless energy transmission system **4000** for transmitting wireless energy using adaptive 3-D pocket-forming techniques. In some embodiments, wireless energy transmission system **4000** includes cloud service provider, any number of suitable wireless power transmitters **4001-4001***n*, and any number of suitable wirelessly charged devices. In other embodiments, wireless energy transmission system **4000** includes additional, fewer, different, or differently arranged components than those illustrated in FIG. **40**.

In FIG. **40**, cloud service provider includes system management service **4067** and information distribution service. wirelessly charged devices each include as associated receiver **4020-4020***n*, client device **4052-4052***n*, and GUI **4061-4061***n*. In some embodiments, there can be additional wirelessly charged devices (e.g., up to n) that each include a receiver, client device, and GUI.

In some implementations, cloud service provider, wireless power transmitters **4001**, and wirelessly charged devices are in wired/wireless communication with one or more of each other. In these embodiments, wireless power transmitters **4001** wirelessly couple and communicate with wirelessly charged devices via any suitable wireless protocol. Examples of suitable wireless protocols include Bluetooth, Bluetooth Low Energy, Wi-Fi, ZigBee, and the like.

In some embodiments, cloud service provider is implemented as computer hardware and software including any number of components required for running a desired set of applications, including any number of processors, random access memory modules, physical storage drives, wired communication ports, wireless communication ports, and the like. In an example, cloud service provider is implemented using one or more components of computing device. In these embodiments, cloud service provider executes any software required to host system management service **4067**, including software able to manage user credentials, device identification, device authentication, usage and payments associated with one or more users, handle service requests, information requests, store and read data related to one or more users, and the like. In other embodiments, cloud service provider additionally includes databases for storing user data, device data, payment data, and the like.

In some embodiments, system management service **4067** is configured to manage power transmission from one or more wireless power transmitters to one or more receivers, credentials associated with mobile device users, billing associated with wireless power transmissions, and the like. In these embodiments, system management service **4067** is hardware and software configured to issue commands to one or more wireless power transmitters **4001**, including commands to begin, pause, or stop transmitting power to one or more wireless power receivers, and the like. In an example, cloud service provider functions substantially similar to computing device. In another example, system management service **4067** functions substantially similar to wireless power manager.

In some embodiments, cloud service provider executes any software required to host information distribution service. Examples of such software include software able to store and read data related to one or more users, perform analytics on data, and the like. In other embodiments, information distribution service is hardware and software configured to collect usage data, billing data, demographic data, and the like from system management service **4067**, wireless power transmitter **4001**, receiver **4020**, and/or client device **4052**. Examples of data include total time spent charging, total energy transmitted to a device, average amount of energy delivered monthly to a device, locations where energy has been transmitted to a mobile device, mobile device user demographic descriptors, and the like

In other embodiments, wireless power transmitters **4001** are implemented as computer hardware and software including any number of components required for running a desired set of applications, including any number of processors, random access memory modules, physical storage drives, wired communication ports, wireless communication interfaces allowing coupling to antennas, and the like. In an example, wireless power transmitters **4001** are implemented using one or more components of computing device. In some embodiments, wireless power transmitters **4001** are implemented as transmitters able to transmit power to wirelessly charged devices (including a wireless power receiver) and wireless power receivers (coupled to one or more electrical devices) using adaptive 3-D pocket-forming techniques. In these embodiments, one or more wireless power transmitters **4001** communicate with one or more receivers **4020** (either as part of wirelessly charged devices or coupled to one or more electrical devices), locate the one or more receivers **4020** in 3-D space, and transmit power signals to form pockets of energy at the one or more receivers **4020**.

In some embodiments, wirelessly charged devices are implemented as computer hardware and software including any number of components required for running a desired set of applications, including any number of processors, random access memory modules, physical storage drives, wired communication ports, wireless communication interfaces allowing coupling to antennas, and the like. In some embodiments, wirelessly charged devices are implemented as computing devices coupled to and in communication with a suitable wireless power receiver. Examples of wirelessly charged devices include mobile phones, laptops, portable video game systems, video game controllers, and the like. In an example, wirelessly charged devices are implemented using one or more components of computing device. In some embodiments, wirelessly charged devices are implemented including receivers (e.g., receiver **4020**) operable to receive power from wireless power transmitters employing adaptive 3-D pocket-forming techniques. In these embodiments, the receiver portion (e.g., receiver **4020**) included in one or more wirelessly charged devices communicates with one or more wireless power transmitters **4001** and receives energy from pockets of energy formed at the location of the receiver associated with the one or more wirelessly charged devices. wirelessly charged devices may include an inherent receiver (e.g., receiver **4020**) or may be coupled and in electrical communication with a separate wireless receiver.

In operation, wireless power transmitters **4001** broadcast an identifier associated with the individual transmitters using a suitable wireless communication protocol, including Bluetooth, Bluetooth Low Energy, Zigbee, and the like. Examples of suitable identifiers include MAC addresses, IMEIs, serial numbers, an ID string, and the like. In other embodiments, suitable identifiers additionally include information about the version of the software used in wireless power transmitters **4001**. In some embodiments, client devices **4052** within wirelessly charged devices are configured to detect one or more identifiers broadcast by one or more wireless power transmitters **4001** and display one or more graphical representations of the wireless power transmitters **4001** to a mobile device user through GUI **4061**. In other embodiments, client devices **4052** determine the ver-

sion of the software running on wireless power transmitter **4001** and use the version information to determine the location and format of the identifier associated with wireless power transmitter **4001** within the information broadcast by wireless power transmitters **4001**.

In some embodiments, client devices **4052** are able to communicate user requests to system management service **4067**, including requests to initiate charging, pause charging, end charging, authorize payment transactions, and the like. In other embodiments, cloud service provider is in communication with one or more wireless power transmitters **4001** and manages the distribution of power signals from the one or more wireless power transmitters **4001**. wireless power transmitter **4001** is in wireless communication with receiver **4020** and is configured to transmit power signals from wireless power transmitter **4001** to receiver **4020** employing adaptive 3-D pocket-forming techniques.

FIG. **41** is a flowchart of a pairing process **4100**, according to an exemplary embodiment. Pairing process **4100** may start when an electronic device identifies **4121** available power receivers in a system. Then, using the signal strength the electronic device may be capable of monitoring **4123** the proximity of each of the available power receivers. The electronic device may constantly check **4125** if one of the power receivers is within a range of proximity to perform the pairing. If none of the power receivers is within the range, the electronic device may continue to monitor the proximity of the power receivers. If one of the power receivers is within range the electronic device may proceed to check the database **4127** to determine if the power receiver is already paired **4129**. If the power receiver is associated with another electronic device, the electronic device may continue to scan for power receivers and track their proximity. If the power receiver has no associations, the electronic device may commence the pairing protocol, and may start **4131** a timer and continuously monitor the proximity of the power receiver. After a time lapse the electronic device may check **4135** if the power receiver is still within the range. If the power receiver is not within the proximity range the electronic device may continue to track the proximity of the power receivers. If the power receiver is still within a proximity range the electronic device may update **4137** the database, associating its ID with the ID of the power receiver.

In some embodiments, the GUI in the electronic device may analyze several signal strength measurements (RSSI) over the predetermined time lapse before updating the database. In some embodiments, the GUI may compute and average of the signal strength measurements and compare it with predefined reference values. After updating the information in an internal database, the electronic device may send **4139** a copy of the updated database to the power transmitter and pairing process **4100** may end.

FIG. **42** is a flowchart of an un-pairing process **4200**, according to an exemplary embodiment. Un-pairing process **4200** may start when an electronic device that is paired to a power receiver is constantly monitoring **4241** the proximity of the power receiver to check **4243** if the power receiver is beyond pairing range. If there is no change, the electronic device may continue to monitor **4241** the proximity of the paired power receiver. If there is a change, the electronic device may start **4245** a timer. After a time lapse the electronic device may check the signal strength of the ads broadcasted by the power receiver to determine **4249** if the power receiver is still within a range. This may be done by the GUI in the electronic device. The GUI may analyze several signal strength measurements (RSSI) over the predetermined time lapse. In some embodiments, the GUI may compute and average of the signal strength measurements and compare it with predefined reference values.

If the electronic device determines that the power receiver is still within the proximity range it may continue to normally monitor the proximity of the power receiver. If the electronic device determines that the power receiver is not within the proximity range any more the electronic device may proceed to update **4251** the internal database and subsequently send **4253** the updated version of the data base to the power transmitter. In a parallel process, the electronic device may start to scan and identify **4255** available power receivers and continuously monitor the proximity of the available power receivers and the un-pairing process **4200** may end.

In an exemplary embodiment, a smartphone including a GUI for interacting with a wireless charging system is paired with a power receiver embedded in a cellphone cover. At a first moment, the smartphone communicates with the power transmitter, is authenticated, receives the power receivers' database and starts scanning for power receiver devices. After scanning, the smartphone finds 3 available power receivers. It tracks the proximity of the power devices based on signal strength. At a second moment, one of the power receivers is placed near the smartphone. The smartphone determines that the power receiver is within the range and starts the pairing process. After a few seconds it checks the signal strength again and it determines that the power receiver is still within an acceptable distance for pairing. Then, the smartphone updates its internal database and sends a copy of the updated database to the power transmitter. At a third moment, the smartphone sends a power request to the power transmitter. The power transmitter searches the database to determine which power receiver is associated with the smartphone, then it directs the antenna array towards the power receiver that is associated with the smartphone, and starts transmitting power.

D. Components of Systems Forming Pockets of Energy

FIG. **4** shows components of an exemplary system **400** of wireless power transmission using pocket-forming procedures. The system **400** may comprise one or more transmitters **402**, one or more receivers **420**, and one or more client devices **446**.

1. Transmitters

Transmitters **402** may be any device capable of broadcasting wireless power transmission signals, which may be RF waves **442**, for wireless power transmission, as described herein. Transmitters **402** may be responsible for performing tasks related to transmitting power transmission signals, which may include pocket-forming, adaptive pocket-forming, and multiple pocket-forming. In some implementations, transmitters **402** may transmit wireless power transmissions to receivers **420** in the form of RF waves, which may include any radio signal having any frequency or wavelength. A transmitter **402** may include one or more antenna elements **406**, one or more RFICs **408**, one or more microcontrollers **410**, one or more communication components **412**, a power source **414**, and a housing that may allocate all the requested components for the transmitter **402**. The various components of transmitters **402** may comprise, and/or may be manufactured using, meta-materials, micro-printing of circuits, nano-materials, and the like.

In the exemplary system **400**, the transmitter **402** may transmit or otherwise broadcast controlled RF waves **442** that converge at a location in three-dimensional space, thereby forming a pocket of energy **444**. These RF waves may be controlled through phase and/or relative amplitude

adjustments to form constructive or destructive interference patterns (i.e., pocket-forming). Pockets of energy **444** may be fields formed at constructive interference patterns and may be three-dimensional in shape; whereas transmission null in a particular physical location may be generated at destructive interference patterns. Receivers **420** may harvest electrical energy from the pockets of energy **444** produced by pocket-forming for charging or powering an electronic client device **446** (e.g., a laptop computer, a cell phone). In some embodiments, the system **400** may comprise multiple transmitters **402** and/or multiple receivers **420**, for powering various electronic equipment. Non-limiting examples of client devices **446** may include: smartphones, tablets, music players, toys and others at the same time. In some embodiments, adaptive pocket-forming may be used to regulate power on electronic devices.

2. Receivers

Receivers **420** may include a housing where at least one antenna element **424**, one rectifier **426**, one power converter **428**, and a communications component **430** may be included. Housing of the receiver **420** can be made of any material capable of facilitating signal or wave transmission and/or reception, for example plastic or hard rubber. Housing may be an external hardware that may be added to different electronic equipment, for example in the form of cases, or can be embedded within electronic equipment as well.

3. Antenna Elements

Antenna elements **424** of the receiver **420** may comprise any type of antenna capable of transmitting and/or receiving signals in frequency bands used by the transmitter **402**A. Antenna elements **424** may include vertical or horizontal polarization, right hand or left hand polarization, elliptical polarization, or other polarizations, as well as any number of polarization combinations. Using multiple polarizations can be beneficial in devices where there may not be a preferred orientation during usage or whose orientation may vary continuously through time, for example a smartphone or portable gaming system. For devices having a well-defined expected orientation (e.g., a two-handed video game controller), there might be a preferred polarization for antennas, which may dictate a ratio for the number of antennas of a given polarization. Types of antennas in antenna elements **424** of the receiver **420**, may include patch antennas, which may have heights from about ⅛ inch to about 6 inches and widths from about ⅛ inch to about 6 inches. Patch antennas may preferably have polarization that depends upon connectivity, i.e., the polarization may vary depending on from which side the patch is fed. In some embodiments, the type of antenna may be any type of antenna, such as patch antennas, capable of dynamically varying the antenna polarization to optimize wireless power transmission.

4. Rectifier

Rectifiers **426** of the receiver **420** may include diodes, resistors, inductors, and/or capacitors to rectify alternating current (AC) voltage generated by antenna elements **424** to direct current (DC) voltage. Rectifiers **426** may be placed as close as is technically possible to antenna elements A**24**B to minimize losses in electrical energy gathered from power transmission signals. After rectifying AC voltage, the resulting DC voltage may be regulated using power converters **428**. Power converters **428** can be a DC-to-DC converter that may help provide a constant voltage output, regardless of input, to an electronic device, or as in this exemplary system **400**, to a battery. Typical voltage outputs can be from about 5 volts to about 10 volts. In some embodiments, power converter may include electronic switched mode DC-DC converters, which can provide high efficiency. In such embodiments, the receiver **420** may comprise a capacitor (not shown) that is situated to receive the electrical energy before power converters **428**. The capacitor may ensure sufficient current is provided to an electronic switching device (e.g., switch mode DC-DC converter), so it may operate effectively. When charging an electronic device, for example a phone or laptop computer, initial high-currents that can exceed the minimum voltage needed to activate operation of an electronic switched mode DC-DC converter, may be required. In such a case, a capacitor (not shown) may be added at the output of receivers **420** to provide the extra energy required. Afterwards, lower power can be provided. For example, 1/80 of the total initial power that may be used while having the phone or laptop still build-up charge.

5. Communications Component

A communications component **430** of a receiver **420** may communicate with one or more other devices of the system **400**, such as other receivers **420**, client devices, and/or transmitters **402**. Different antenna, rectifier or power converter arrangements are possible for a receiver as will be explained in following embodiments.

E. Methods of Pocket Forming for a Plurality of Devices

1. Primary Configuration

FIG. **5** shows steps of powering a plurality of receiver devices, according to an exemplary embodiment. In a first step **501**, a transmitter (TX) establishes a connection or otherwise associates with a receiver (RX). That is, in some embodiments, transmitters and receivers may communicate control data over using a wireless communication protocol capable of transmitting information between two processors of electrical devices (e.g., Bluetooth®, BLE, Wi-Fi, NFC, ZigBee®). For example, in embodiments implement Bluetooth® or Bluetooth® variants, the transmitter may scan for receiver's broadcasting advertisement signals or a receiver may transmit an advertisement signal to the transmitter. The advertisement signal may announce the receiver's presence to the transmitter, and may trigger an association between the transmitter and the receiver. As described later, in some embodiments, the advertisement signal may communicate information that may be used by various devices (e.g., transmitters, client devices, sever computers, other receivers) to execute and manage pocket-forming procedures. Information contained within the advertisement signal may include a device identifier (e.g., MAC address, IP address, UUID), the voltage of electrical energy received, client device power consumption, and other types of data related to power transmission waves. The transmitter may use the advertisement signal transmitted to identify the receiver and, in some cases, locate the receiver in a two-dimensional space or in a three-dimensional space. Once the transmitter identifies the receiver, the transmitter may establish the connection associated in the transmitter with the receiver, allowing the transmitter and receiver to communicate control signals over a second channel.

As an example, when a receiver comprising a Bluetooth® processor is powered-up or is brought within a detection range of the transmitter, the Bluetooth processor may begin advertising the receiver according to Bluetooth® standards. The transmitter may recognize the advertisement and begin establishing connection for communicating control signals and power transmission signals. In some embodiments, the advertisement signal may contain unique identifiers so that the transmitter may distinguish that advertisement and ultimately that receiver from all the other Bluetooth® devices nearby within range.

In a next step **503**, when the transmitter detects the advertisement signal, the transmitter may automatically form a communication connection with that receiver, which may allow the transmitter and receiver to communicate control signals and power transmission signals. The transmitter may then command that receiver to begin transmitting real-time sample data or control data. The transmitter may also begin transmitting power transmission signals from antennas of the transmitter's antenna array.

In a next step **505**, the receiver may then measure the voltage, among other metrics related to effectiveness of the power transmission signals, based on the electrical energy received by the receiver's antennas. The receiver may generate control data containing the measured information, and then transmit control signals containing the control data to the transmitter. For example, the receiver may sample the voltage measurements of received electrical energy, for example, at a rate of 100 times per second. The receiver may transmit the voltage sample measurement back to the transmitter, 100 times a second, in the form of control signals.

In a next step **507**, the transmitter may execute one or more software modules monitoring the metrics, such as voltage measurements, received from the receiver. Algorithms may vary production and transmission of power transmission signals by the transmitter's antennas, to maximize the effectiveness of the pockets of energy around the receiver. For example, the transmitter may adjust the phase at which the transmitter's antenna transmit the power transmission signals, until that power received by the receiver indicates an effectively established pocket energy around the receiver. When an optimal configuration for the antennas is identified, memory of the transmitter may store the configurations to keep the transmitter broadcasting at that highest level.

In a next step **509**, algorithms of the transmitter may determine when it is necessary to adjust the power transmission signals and may also vary the configuration of the transmit antennas, in response to determining such adjustments are necessary. For example, the transmitter may determine the power received at a receiver is less than maximal, based on the data received from the receiver. The transmitter may then automatically adjust the phase of the power transmission signals, but may also simultaneously continues to receive and monitor the voltage being reported back from receiver.

In a next step **511**, after a determined period of time for communicating with a particular receiver, the transmitter may scan and/or automatically detect advertisements from other receivers that may be in range of the transmitter. The transmitters may establish a connection to the second receiver responsive to Bluetooth® advertisements from a second receiver.

In a next step **513**, after establishing a second communication connection with the second receiver, the transmitter may proceed to adjust one or more antennas in the transmitter's antenna array. In some embodiments, the transmitter may identify a subset of antennas to service the second receiver, thereby parsing the array into subsets of arrays that are associated with a receiver. In some embodiments, the entire antenna array may service a first receiver for a given period of time, and then the entire array may service the second receiver for that period of time.

Manual or automated processes performed by the transmitter may select a subset of arrays to service the second receiver. In this example, the transmitter's array may be split in half, forming two subsets. As a result, half of the antennas may be configured to transmit power transmission signals to the first receiver, and half of the antennas may be configured for the second receiver. In the current step **513**, the transmitter may apply similar techniques discussed above to configure or optimize the subset of antennas for the second receiver. While selecting a subset of an array for transmitting power transmission signals, the transmitter and second receiver may be communicating control data. As a result, by the time that the transmitter alternates back to communicating with the first receiver and/or scan for new receivers, the transmitter has already received a sufficient amount of sample data to adjust the phases of the waves transmitted by second subset of the transmitter's antenna array, to transmit power transmission waves to the second receiver effectively.

In a next step **515**, after adjusting the second subset to transmit power transmission signals to the second receiver, the transmitter may alternate back to communicating control data with the first receiver, or scanning for additional receivers. The transmitter may reconfigure the antennas of the first subset, and then alternate between the first and second receivers at a predetermined interval.

In a next step **517**, the transmitter may continue to alternate between receivers and scanning for new receivers, at a predetermined interval. As each new receiver is detected, the transmitter may establish a connection and begin transmitting power transmission signals, accordingly.

In one exemplary embodiment, the receiver may be electrically connected to a device like a smart phone. The transmitter's processor would scan for any Bluetooth devices. The receiver may begin advertising that it's a Bluetooth device through the Bluetooth chip. Inside the advertisement, there may be unique identifiers so that the transmitter, when it scanned that advertisement, could distinguish that advertisement and ultimately that receiver from all the other Bluetooth devices nearby within range. When the transmitter detects that advertisement and notices it is a receiver, then the transmitter may immediately form a communication connection with that receiver and command that receiver to begin sending real time sample data.

The receiver would then measure the voltage at its receiving antennas, send that voltage sample measurement back to the transmitter (e.g., 100 times a second). The transmitter may start to vary the configuration of the transmit antennas by adjusting the phase. As the transmitter adjusts the phase, the transmitter monitors the voltage being sent back from the receiver. In some implementations, the higher the voltage, the more energy may be in the pocket. The antenna phases may be altered until the voltage is at the highest level and there is a maximum pocket of energy around the receiver. The transmitter may keep the antennas at the particular phase so the voltage is at the highest level.

The transmitter may vary each individual antenna, one at a time. For example, if there are 32 antennas in the transmitter, and each antenna has 8 phases, the transmitter may begin with the first antenna and would step the first antenna through all 8 phases. The receiver may then send back the power level for each of the 8 phases of the first antenna. The transmitter may then store the highest phase for the first antenna. The transmitter may repeat this process for the second antenna, and step it through 8 phases. The receiver may again send back the power levels from each phase, and the transmitter may store the highest level. Next the transmitter may repeat the process for the third antenna and continue to repeat the process until all 32 antennas have stepped through the 8 phases. At the end of the process, the transmitter may transmit the maximum voltage in the most efficient manner to the receiver.

In another exemplary embodiment, the transmitter may detect a second receiver's advertisement and form a communication connection with the second receiver. When the transmitter forms the communication with the second receiver, the transmitter may aim the original 32 antennas towards the second receiver and repeat the phase process for each of the 32 antennas aimed at the second receiver. Once the process is completed, the second receiver may getting as much power as possible from the transmitter. The transmitter may communicate with the second receiver for a second, and then alternate back to the first receiver for a predetermined period of time (e.g., a second), and the transmitter may continue to alternate back and forth between the first receiver and the second receiver at the predetermined time intervals.

In yet another implementation, the transmitter may detect a second receiver's advertisement and form a communication connection with the second receiver. First, the transmitter may communicate with the first receiver and re-assign half of the exemplary **32** the antennas aimed at the first receiver, dedicating only 16 towards the first receiver. The transmitter may then assign the second half of the antennas to the second receiver, dedicating 16 antennas to the second receiver. The transmitter may adjust the phases for the second half of the antennas. Once the 16 antennas have gone through each of the 8 phases, the second receiver may be obtaining the maximum voltage in the most efficient manner to the receiver.

2. Determining Optimal Position for Pocket Forming

FIG. **43** illustrates tracking and positioning flowchart **4300**, which may be employed by an algorithm in a controller, CPU, processor, computer among others, for determining the optimal position and orientation of an electronic device which. may receive power and/or charge through wireless power transmission. In order to achieve the optimal efficiency, electronic device may use a variety of sensors for determining the voltage level in battery and/or the power level received when wireless power transmission starts **4359**. Such sensors may indicate whether the device is receiving power at the maximum available efficiency **4359**. Examples of sensors and/or circuits to determine power efficiency may comprise one or more of: an accelerometer, an ambient light sensor, a GPS sensor, a compass, a proximity sensor, a pressure sensor, a gyroscope, an infrared sensor, a motion detector, OPS sensor circuit and/or any other type of sensor or circuit.

Maximum available efficiency may depend on distance from transmitter, obstacles, temperature, among others. If the device is receiving power at maximum available efficiency, then an application, software or program installed on the electronic device and/or in the receiver may aware and/or note user to maintain current position **4363**. Moreover, if the device is receiving power at a lower efficiency than the maximum available efficiency, then software or program may use a variety of sensors for tracking and determining the optimal position of electronic device in relation with transmitter position and orientation. Sensors may include accelerometers, infrared, OPS, among others. Furthermore, a communication reciprocity may be used by the communication module for tracking and positioning. Communication module may include and combine Bluetooth technology, infrared communication, Wi-Fi, FM radio among others. By comparing voltage level and/or power received in each position and/or orientation of electronic device, the software and/or program may notify and/or guide user to change device position **4365** for looking the optimal position and/or orientation.

FIG. **44**A illustrates wireless power transmission **4400**A, where a transmitter **4401**A may produce pocket-forming over plurality of cellphones **4452**A. As depicted in FIG. **44**A, wireless power transmission **4400**A may charge and/or power cellphone **4452**A at a low efficiency because antennas **4406**B on the receiver may be faced to the same direction of the RF waves **4442**B, thus pocket of energy **4404**A may provide less charge and/or power to antennas **4406**B.

FIG. **44**B illustrates wireless power transmission where a cellphones receives charge and/or power at low efficiency, according to an exemplary embodiment. As shown in FIG. **44**B, by turning cellphone **4452**B 180° degrees, antennas **4406**B may receive power at a higher efficiency, such efficiency may be achieved due the antennas **4406**B orientation, which may be faced in the opposite direction of RF waves **4442**B.

3. Receiver Initiating Charge

FIG. **45** is a flowchart of a charge request process **4500**, according to an exemplary embodiment. Process **4500** may start when an electronic device, which includes a GUI for interacting with a wireless charging system, communicates **4569** with a power transmitter. During the communication the electronic device may send information to the power transmitter including device ID and charge status, amongst others. The power transmitter may update its database and may send a copy to the electronic device including the IDs of available power transmitters within the system. Then, the electronic device may check **4571** if its ID is already associated with the ID of a power receiver.

If the electronic device is not already paired, the electronic device may start scanning **4573** for power receivers. All the power receivers in the system may broadcast advertisement messages at any time. The advertisement messages may include a unique 32 bit device ID and a system ID or UUID (Universally Unique Identifier). In some embodiments, the advertisement messages may include additional information. The electronic device may be capable of monitoring the signal strength of the ads being broadcasted by the different power receivers and keep track of the proximity of the power receivers to the electronic device.

When the electronic device detects that a power receiver is within a range of proximity for a amount of time, it may proceed to check the database to determine if the power receiver is not already paired with another electronic device. If the power receiver is not already paired with another device the electronic device may update the database with the association of electronic device's ID with the ID of the power receiver during pairing **4575**. Then, the electronic device may send a copy of the updated database to the power transmitter.

Once the electronic device is paired, a user, through the GUI in the electronic device, or the electronic may send a power request **4577** to the power transmitter. If the power transmitter finds it suitable to provide power to the electronic device, it may turn on **4579** the power receiver.

Afterwards, the power transmitter may aim the antenna array to the power receiver associated with the electronic device and start sending energy to the power receiver. The power receiver may then start charging **4581** the electronic device. Once the electronic device is charged, the process may end.

FIG. **46** illustrates an example routine **4600** that may be utilized by micro-controller from transmitter **4600** to control wireless power transmission. Routine **4600** may begin when transmitter **4600** receives a power delivery request **4683** from receiver. At power delivery request **4683**, receiver may send a signature signal which may be coded using tech-

niques such as delay encoding, orthogonal frequency-division multiplexing (OFDM), code division multiplexing (CDM) or other binary coding for identifying a given electronic device including receiver. At this stage, micro-controller may proceed to authenticate **4685** where it may evaluate the signature signal sent by receiver. Based on authenticate **4685**, micro-controller may proceed to a decision **4687**. If receiver is not authorized to receiver power, micro-controller may decide, at decision **4687**, to not deliver power **4689**, and thus end routine **4600** at end **4691**. On the other hand, if receiver is authorized to receive power, micro-controller may proceed to determine device type **4693**. At this step, micro-controller may obtain information from receiver such as type of device, manufacturer, serial number, total power required, battery level among other such information. Afterwards, micro-controller may proceed to run device module **4695**, where it may run a routine suited to the authenticated device. In addition, if multiple receivers are requiring power, micro-controller may deliver power equally to all receivers or may utilize a priority status for each receiver. Such a priority status may be user defined. In some embodiments, the user may choose to deliver more power to its smartphone, than to its gaming device. In other cases, the user may decide to first power its smartphone and then its gaming device.

FIG. **47** illustrates an example of a routine **4700** that may be utilized by micro-controller at device module. Routine **4700** may start at determine power delivery profile **4741** where it may decide to either run on a default power profile or a user custom profile. In the case of the former, micro-controller may proceed to verify battery level **4743** where it may determine power needs of the electronic device including receiver. Afterwards, micro-controller may proceed to a decision **4745**. If the battery of the electronic device including receiver is fully charged, at decision **4745**, micro-controller may proceed to don't deliver power **4747**, and thus end routine **4700** at end **4751**. On the other hand, if the battery of the electronic device including receiver is not fully charged, micro-controller may proceed to verify if such electronic device meets specific powering criteria at decision **4749**. The foregoing powering criteria may depend on the electronic device requiring power. For example, smartphones may only receive power if are not being used, or maybe during usage but only if the user is not talking through it, or maybe during usage as long as Wi-Fi is not compromised among other such criteria. In the case of a user custom profile, the user may specify the minimum battery level its equipment can have before delivering power, or the user may specify the criteria for powering his or her device among other such options.

Alternatively, micro-controller may also record data on a processor on transmitter. Such data may include powering statistics related to how often does a device require power, at what times is the device requesting power, how long it takes to power the device, how much power was delivered to such device, the priority status of devices, where is the device mostly being powered (for example at home or in the workplace). In addition, such statistics could be uploaded to a cloud based server so that the user can look at all such statistics. In some embodiments, stores, coffee shops and the like providing wireless power as a secondary service may use the aforementioned statistics for charging a user the corresponding monetary amounts for the total power received. In some cases, users may buy powering time, for example, a user may pay for an hour of power. Thus, the aforementioned statistics can help micro-controller decide when to stop delivering power to such a user.

4. Transmitter Initiating Charge

FIG. **48** illustrates a transmitter creating at least one pocket of energy on a portable mat which may further re-direct power to other receiving devices, according to an exemplary embodiment. FIG. **48** illustrates an alternative configuration to WPT in the form of a wireless power transmission **4800** where a transmitter **4801** may create at least one pocket of energy **4804** on a portable mat **4894**. Mat **4894** may include at least one receiver and at least one transmitter (not shown) for receiving wireless power from transmitter **4801** and re-transmitting such power, through pocket-forming, to a device, for example a smartphone **4852** operatively coupled to a receiver (not shown). In some embodiments, mat **4894** may communicate to transmitter **4801** through short RF signals sent through its antenna elements or via standard communications protocol. The foregoing may allow transmitter **4801** to easily locate mat **4894**. The disclosed configuration may be beneficial whenever smartphone **4852** may not be able to communicate directly to transmitter **4801**. This configuration may also be beneficial because mat **4894** can be placed virtually in any desirable and easy to reach location. Lastly, transmitter **4801** may include a button (not shown) similar to that of transmitter **4801** which upon activation may produce pocket of energy **4804** upon mat **4894**. The duration of pocket of energy **4804** upon mat **4894** can be custom defined to suit the needs of various users, An even further advantage of WPT can be that other devices may be placed in the vicinity of mat **4894** and can too receive power wirelessly, i.e. electronic devices requiring charge may not even be required to be placed upon mat **4894**.

FIG. **49** includes FIG. **49**A and FIG. **49**B which depict a wireless power transmission **4900**A. Referring first to FIG. **49**A, a smartphone **4952**A operatively coupled to a receiver (not shown) may be out of usable power and may not be able to communicate with a transmitter **4901**A. In this embodiment, a tracer can be used to communicate to transmitter **4901**A the locations at which power should be delivered. Tracer can include a communications component within it (not shown), as those described above for transmitters and receivers, for communicating the foregoing locations to a transmitter **4901**A. Such communications component may become active at the user's request. For example, tracer can include an activation button (not shown) which after being pressed may activate the aforementioned communications component.

FIG. **49**B illustrates a wireless power transmission including a tracer which may serve for establishing desired locations for the generation of pockets of energy over at least one receiving device, according to an exemplary embodiment.

Following this activation, communications component may send a request to transmitter **4901**A for creating a pocket of energy **4904**B at the location of tracer. In order to charge smartphone **4952**A, users may activate tracer at the same or approximate location of smartphone **4952**A (FIG. **49**B). Upon building the necessary charge, smartphone **4952**A may optionally communicate its location to transmitter **4901**A (by its own means) to continue the wireless delivery of power. In other embodiments, pockets of energy **4904**B can be created at areas or regions of space which may be beneficial or easy to reach for users but where no electronic devices may be present. In this case, electronic devices requiring charge such as smartphone **4952**A can be moved to the foregoing locations for utilizing pockets of energy **4904**B. The duration of pockets of energy **4904**B, at the absence of electronic devices requiring charge, may be custom defined by users. In some other embodiments, the

duration of pockets of energy **4904**B can be given by the operation of tracer, for example, at least one pocket of energy **4904**B can be generated upon activating tracer. Such pocket of energy **4904**B may remain active until a second press of the activation button of tracer.

In the foregoing configuration of wireless power transmission, electronic devices such as smartphone **4952**A can utilize smaller and cheaper receivers. The foregoing can be accomplished because receivers may not require a communications components on their own for communicating locations to transmitter **4901**A. Rather, tracer can be used to perform such function. In some other embodiments, tracer can take the form of accessories which may connect to electronic via connections such as Universal Serial Bus (USB). In this case, tracer may become active upon being connected to a device, and may control the totality of the wireless delivery of power. In some embodiments, users may create as many pockets of energy **4904**B as devices requiring charge.

FIG. **50** illustrates a wireless power transmission **5000** where a user carrying a tracer **5098** may create various pockets of energy **5004** in different locations for powering various electronic devices which may include receivers for pocket-forming. Pockets of energy **5004** may be formed by a transmitter **5001**, at the request and locations the user Specifies. In addition, once devices build up charge they may optionally communicate their location to transmitter **5001** (by their own means) to continue the wireless delivery of power.

5. Powering Multiple Devices Utilizing Time Division Multiplexing

FIG. **51** illustrates a flowchart showing a method for automatically assigning subsets of antenna arrays for simultaneously powering two or more client devices, according to an exemplary embodiment.

Method **5100** may start when a user or system operator accesses the system management GUI, through a web site or on a client computing device, to command **5153** the wireless power transmission system to charge a client device that may be paired with an adaptable paired receiver or a client device that may include a wireless power receiver built in as part of the hardware of the device. In other embodiments, the system automatic charge schedule may also command the wireless power transmission system to charge a client device. Subsequently, the system management may send charging command **5155** to all system transmitters. Each system transmitter may determine if it is within power range of said power receiver, and, if not, may select **5157** best transmitter to control wireless power receiver of client device to power, subsequently, selected transmitter may start real-time communication with wireless power receiver to track **5159** direction of wireless power receiver relative to transmission antenna array, aims entire power transmission antenna array at wireless power receiver, and starts power transmission. Wireless power receiver may then receive said power, and subsequently power client device.

Following method **5100**, user or automatic schedule software may command **5161** a second client device to charge, subsequently, selected transmitter may start real-time communication with second client device's receiver to track direction of second wireless power receiver and split **5163** transmitter's antenna array in half so that the transmitter may aim and use half, or a subset of, the power antenna array to power first client device, and aim and use the remaining antennas to power second client device, so that both client devices may continually receive power. Then, if the user or automatic schedule software command more client devices to charge, at decision **5165**, then selected transmitter may start real-time communication with a third or more client devices and reassign **5167** its antenna arrays by splitting said antenna arrays in subsets of antennas to aim and power each receiver. If there are no more client devices to charge, the system manager may check if any of the client devices being charged or powered stops powering, at decision **5169**, subsequently, if one or more client devices stops power, then the subset of antenna arrays assigned to power said client device's receiver may be re-distributed **5171** among the remaining client devices' receivers to continue powering said receivers. This process may happen almost instantaneously for the devices being powered because the transmitter software is already tracking and immediately uses their exact direction relative to the antenna array. If no client device stops power, then the system manger may check again, at decision **5165**, if there are more client devices to charge and follow the same steps previously described. This method may continue in a loop as long as the wireless power system is charging or powering one or more client device's receiver.

FIG. **52** illustrates a flowchart of an exemplary routine **5200** that may be utilized by wireless power management software, which may be initiated by system management GUI to command system to charge one or more client devices at step **5273**. System management may distribute command to all system transmitters managed by wireless management software. Then, based on the number of client devices to be charged, management software may determine if there are enough antennas and communication channels available, at decision **5275**. If there are enough antennas and communication channels for charging the client devices, then at step **5277**, management software may assign the closest transmitter to charge client device and may assign a dedicated communication channel to start communication with the client device, which may be to continuously track client device direction from power transmission antenna array, or to monitor battery levels, or to receive measurements or other telemetry or meta data from receiver, or any other functionality to support wireless power transmission. Dedicated communication channel may be selected from available channels for communication with client devices.

Subsequently, wireless management software may continue charging client devices until more devices request power, at decision **5279**. If there are no additional client devices requesting power, then routine **5200** may end. However, if more devices are requesting power, then at decision **5279**, wireless power manager may determine if there are enough antennas and communication channels available for the new client devices. If there are not enough antennas and communication channels, then at step **5281**, wireless power manager may assign all or groups of antennas from the antenna array and communication channels by employing Time Division Multiplexing (TDM).

TDM is used for transmitter communication with more power receivers than it has channels for, by sharing the available channels over time. It takes turn communicating to each receiver, communicating with each one for a finite amount of time, which may be a short amount of time such as 1 second or less. By allowing frequent communication with all receivers, by sharing the limited number of transmitter communication channels, the transmitter can then track and/or power all those receivers (and subsequently the client devices that power receivers transmit electrical power to).

TDM also supports sharing the power transmission from the entire transmitter antenna array between all the devices

over time. That is, as the transmitter automatically switches communication throughout the receivers scheduled to receiver power, so that the transmitter can track receiver direction (angle) relative to transmitter antenna array, it also rapidly re-directs the antenna array from one receiver to another, so that each scheduled receiver periodically gets the antenna power, during its 'time slice.' The transmitter may also direct an individual group (sub-set) of antennas to a specific receiver while simultaneously directing one or more other groups to one or more other receivers.

TDM may be employed for allowing charge and more specifically communication between transmitters and power receivers of client devices, by using the existing communication channels, which may be shared by more than one device instead of being dedicated channels. By using TDM techniques wireless power transmitter may allow to re-assign one or more of its individual transmission antennas and communication channels to certain group of client devices, which may be in an online mode, consequently, being simultaneously powered. The remaining client devices may be turned in an offline mode, while online client devices are powered and hold a communication channel in a limited interval of time.

Subsequently, wireless power manager may continue charging client devices until more devices request power, at decision **5279**. Finally, if there are no additional client devices requesting power at decision **5279**, then routine **5200** may end.

FIG. **53** is a flowchart of a process **5300** to power a plurality of client devices using a time division multiplexing (TDM) method in a wireless power transmission system, according to an embodiment. Process **5300** may start when a system management GUI operated by a user in a wireless power transmitter system may command a system management server to manually or automatically power one or more client devices from wireless power receivers, at step **5383**. Subsequently, the system management server may communicate the commands to one or more wireless power transmitters in the wireless power transmission system, at step **5385**.

Each wireless power transmitter may examine a local system distributed database or other storage means of system status, control and figuration to determine if the transmitter is within the power range of client device, at step **5387**, and may control the wireless power receiver of the client device that has been commanded to receive power. If the wireless power receiver of the client device is not within the power range of wireless power transmitters then the process may end. However, if the wireless power receiver of the client device is within the power range of any wireless power transmitter, then said wireless power transmitter may start real-time communication with the wireless power receiver of the client device, at step **5389**. Each time that there is one or more client devices commanded for wireless power transmitters to be powered, then wireless power transmitters may re-divide its power transmission antennas into groups, where each group may be assigned for each client device allowing to power all client devices at the same time.

Afterwards, system management server within the wireless power transmission system may command to wireless power transmitters if there are enough transmitter antennas to power all the wireless power receivers of the client devices within the power range, at step **5391**. If transmitter antennas within the wireless power transmitters, are able to meet the power demand of all wireless power receivers, then the wireless power transmitters may continue powering all client devices, at step **5393**. However, if the present power resources of wireless power transmitter do not meet the power demand of all wireless power receivers, then system management server may command to power transmitter manager to implement the TDM power transmission within the wireless power transmitters, at step **5395**. The wireless power manager within the wireless power transmitter may receive the command about the client device to be powered, and may determine which wireless power receiver is associated with the client device.

Wireless power transmitter by using TDM power transmission groups or re-assigns one or more of its transmission antennas so that each group sends power to a different wireless power receiver, so that the client devices of the receivers simultaneously receiver power. The remaining client devices with wireless power receivers may be set to offline mode, while online client devices are powered. TDM power transmission system may determine if there is enough power for the online client devices, at step **5397**. If there is not enough power for the online client devices, that is, one or more client devices may not be receiving enough power, then the wireless power transmitter will set one or more online client device to be offline, and try again, and then proceed by taking more devices offline until all the online client devices receive enough power.

The TDM power transmission process may allow wireless power transmitter to power all client devices enough at regular intervals of time (or time slots) using an automatic on/off line process, at step **5399**.

Similarly, if there is not enough power for the present online client devices, then one by one the client devices that have been online for the longest may be turned offline until all online client devices get enough power. However, if the client devices that are in the online mode receive enough power, then the TDM power transmission may decide to keep the same amount of client devices in online mode and power them, at step **5393**.

FIG. **54** is a flowchart of a process **5400** for adjusting the numbers of antennas assigned to a wireless power receiver so power transmission from a wireless power transmitter to a receiver is more balanced. Process **5400** may be part of an overall process for wireless power transmission, and may performed by a microprocessor, that may be part of system architecture. Process **5400** may be performed by the processor by executing software code in a power transmission management application such as power transmitter manager app. In some embodiments, the processor may perform process **5400** by executing instructions laid out in a wireless power manager application, in yet other embodiments, the processor may perform process **5400** by executing instructions laid out in a software application that may not be part of system architecture.

The code executed by the microprocessor may cause several components included in system architecture to initiate or terminate an activity. Hardwired circuitry, alternative to those shown in system architecture, may be used in place of or in combination with software instructions to implement processes described here. Thus, implementations described here are not limited to any specific combination of hardware circuitry and software. While the blocks in the disclosed process **5400** are shown in a particular order, the actual order may differ. In some embodiments, some steps may be performed in parallel.

The process may begin at step **5451**, when a processor commands a wireless power transmitter (WPT) communicates with a wireless power receiver (WPR) that is close enough to establish communication with the WPT. The WPR

may communicate data to the WPT that may include the WPR's identification number, WPR's approximate spatial location, and WPR's power status, among others. At step **5453**, the processor may determine from the received data and additional data that may be stored in a database, such as database, whether the WPT should transmit power to the WPR. If the processor determines that the WPT should not power the WPR, it may continue to look, at step **5465**, for more wireless power receivers that are in range and should be powered. If the processor determines that the WPT should power the WPR, then at step **5455**, the processor may calculate a better approximation of the location of the WPR by using the approximate spatial location data received from the WPR and additional metrics that may include signal strength, WPT type, and device type that the WPR may be attached to, among others.

At step **5457**, the processor may command the WPT to assign a set of antennas, from the antenna array, which may be used to transmit RF waves to the WPR. At step **5459**, the processor may command the WPT to modify amplitude, and phase, among other parameters of the transmitted RF waves to shape a beam that may be focused on the WPR. At step **5461**, the processor may read status data that may come from the WPR. Status data coming from the WPR may include, measurement of energy being received by the WPR, power level of the WPR, the perceived spatial location of the WPR, and the minimum power that is enough to power the electronic device to which the WPR may be attached, among other operational parameters. In some embodiments, the minimum power setting may come from other source, such as look-up tables elsewhere in the system.

At step **5463**, the processor may use the information read and determine if the power transmitted to a WPR is unbalanced compared to other WPR's, or if any WPR is getting too much or too little power. If the power received by the WPR is less than the minimum power, the processor may command the WPT, back at step **5457**, to assign more antennas to the set of antennas that may be in use to power the WPR. In some embodiments, if the number of antennas available is not enough to power the WPR, the WPT may utilize techniques such as time division multiplexing, to share more antennas with the WPR to meet the power demand of the WPR that may be within the power range of one or more wireless power transmitters. A technique such as time division multiplexing may allow to charge multiple WPR's through regular intervals of time or slot time during an automatic online mode and offline mode sequence.

If the power received by a WPR is substantially more than its required minimum power, the processor may command the WPT, back at step **5457**, to reduce the number of antennas assigned to the WPR, and use the de-assigned antennas to power other WPR's, allowing the first WPR to continue to be wirelessly powered simultaneously. At step **5465**, the processor may look for another wirelessly powered receiver that is in range and should be powered, and if found, the process may initiate communication with the new WPR, back at step **5453**, and process from step **5453** may repeat. When the processor determines from communication with the WPR, that the WPT is done transmitting power the WPR, it may communicate to the WPR, back at step **5451**, that the power transmission has ended, and may disconnect communication at step **5453**. The WPT may then, at step **5465**, examine the database to determine which, if any, WPR is in range that the WPT should transmit power to.

FIG. **55**A depicts a block diagram of a transmitter **5500**A which may be utilized for wireless power transmission. Such transmitter **5500**A may include one or more antenna elements **5506**A, one or more Radio frequency integrated circuit (RFIC) **5508**A, one or more microcontroller **5510**A, a communication component **5512**A, a power source **5514**A and a housing **5501**A, which may allocate all the requested components for transmitter **5500**A. Components in transmitter **5500**A may be manufactured using meta-materials, micro-printing of circuits, nano-materials, and the like.

Transmitter **5500**A may be responsible for the pocket-forming; adaptive pocket-forming and multiple pocket-forming through the use of the components mentioned in the foregoing paragraph. Transmitter **5500**A may send wireless power transmission to one or more receivers in form of radio signals, such signals may include any radio signal with any frequency or wavelength.

FIG. **55**B is an exemplary illustration of a flat panel antenna array **5500**B that may be used in transmitter **5500**A. Flat panel antenna array **5500**B may then include an N number of antenna elements **5506**A where gain requirements for power transmitting may be from 64 to 256 antenna elements **5506**A which may be distributed in an equally spaced grid. In one embodiment, flat panel antenna array **5500**B may have a 8×8 grid to have a total of 64 antenna elements **5506**A. In another embodiment, flat panel antenna array **5500**B may have a 16×16 grid to have a total of 256 antenna elements **5506**A. However, the number of antenna elements **5506**A may vary in relation with the desired range and power transmission capability on transmitter **5500**A, the more antenna elements **5506**A, the wider range and higher power transmission capability. Alternate configurations may also be possible including circular patterns or polygon arrangements. Flat panel antenna array **5500**B may also be broken into numerous pieces and distributed across multiple surfaces (multi-faceted).

Antenna elements **5506**A may include flat antenna elements **5506**A, patch antenna elements **5506**A, dipole antenna elements **5506**A and any suitable antenna for wireless power transmission. Suitable antenna types may include, for example, patch antennas with heights from about ½ inch to about 6 inches and widths from about ½ inch to about 6 inches. Shape and orientation of antenna elements **5506**A may vary in dependency of the desired features of transmitter **5500**A, orientation may be flat in X, Y, and Z axis, as well as various orientation types and combinations in three dimensional arrangements. Antenna elements **5506**A materials may include any suitable material that may allow radio signal transmission with high efficiency, good heat dissipation and the like.

Antenna elements **5506**A may include suitable antenna types for operating in frequency bands such as 900 MHz, 2.5 GHz or 5.8 GHz as these frequency bands conform to Federal Communications Commission (FCC) regulations part 18 (Industrial, Scientific and Medical equipment). Antenna elements **5506**A may operate in independent frequencies, allowing a multi-channel operation of pocket-forming.

In addition, antenna elements **5506**A may have at least one polarization or a selection of polarizations. Such polarization may include vertical pole, horizontal pole, circularly polarized, left hand polarized, right hand polarized, or a combination of polarizations. The selection of polarizations may vary in dependency of transmitter **5500**A characteristics. In addition, antenna elements **5506**A may be located in various surfaces of transmitter **5500**A.

Antenna elements **5506**A may operate in single array, pair array, quad array and any other suitable arrangement, which may be designed in accordance with the desired application.

FIG. **56** shows antenna arrays **5686**A according to various embodiments. Antenna arrays **5686**A may include suitable antenna types for operating in frequency bands such as 900 MHz, 2.5 GHz, and 5.8 GHz, as these frequency bands may comply with the FCC regulations, part **18**.

FIG. **56**A shows a single array **5686**A where all antenna elements **5606**B may operate at 5.80 hz. Thus single array **5686**A may be used for charging or powering a single device.

FIG. **56**B shows pair array **5686**B, where the top half **5688**B of antenna elements **5606**B may operate at 5.8 GHz and the bottom half **5690**B may operate at 2.4 GHz. Pair array **5686**B may then be used to charge or power, at the same time, two receivers that may operate at different frequency bands such as the ones described above. As seen in FIG. **56**B, antenna elements **5606**B may vary in size according to the antenna type.

FIG. **56**C shows a quad array **5686**C where each antenna element may be virtually divided to avoid power losses during wireless power transmission. In this embodiment, each antenna element may be virtually divided in two antenna elements, antenna element **5694**C and antenna element **5692**C. Antenna element **5694**C may be used for transmitting in 5.8 GHz frequency band and antenna element **5692**C may be used for transmitting in 2.4 GHz frequency band. Quad array **5686**C may then be used in situations where multiple receivers—operating at different frequency bands require to be charged or powered.

In a first exemplary embodiment, a portable electronic device that may operate at 2.4 GHz may be powered or charged. In this example, a transmitter may be used to deliver pockets of energy onto one electronic device. This transmitter may have a single array of 8×8 of flat panel antennas where all the antenna elements may operate in the frequency band of 2.4 GHz flat antennas may occupy less volume than other antennas, hence allowing a transmitter to be located at small and thin spaces, such as, walls, mirrors, doors, ceilings and the like. In addition, flat panel antennas may be optimized for operating to long distances into narrow hail of wireless power transmission, such feature may allow operation of portable devices in long areas such as, train stations, bus stations, airports and the like. Furthermore, flat panel antennas of 8×8 may generate smaller pockets of energy than other antennas since its smaller volume, this may reduce losses and may allow more accurate generation of pockets of energy, such accuracy may be employed for charging powering a variety of portable electronic devices near areas and/or objects which do not require pockets of energy near or over them.

In a second exemplary embodiment, two electronic devices that may operate at two different frequency bands may be powered or charged at the same time. In this example, the transmitter may be used to deliver pockets of energy onto two electronic devices. In this example, the transmitter may have a pair array with different type of antennas, flat panel antennas and dipole antennas, where ½ of the array may be formed by flat panel antennas and the other half by dipole antennas. As described in the first exemplary embodiment, flat panel antennas may be optimized to radiate power within narrow halls at considerable distances. On the other hand, dipole antennas may be employed for radiating power at nearer distances but covering more area because of their radiation pattern, Furthermore, dipole antennas may be manually adjusted, this feature may be beneficial when the transmitter is located at crowded spaces and transmission needs to be optimized.

FIG. **57** is a chart depicting an exemplary distribution of communication channels **5700** over time, employing TDM in wireless power transmission. More specifically, FIG. **57** depicts a table with channels assignment for 5 client devices while the wireless power transmitter only allows 4 communication channels.

FIG. **57** chart shows over time how the transmitter's limited number of 4 communication channels may be used to communicate with 5 receivers—more receivers than the transmitter has channels for. Time advances from left to right, and 10 time slices are represented. Each time slice represents a finite amount of clock time, for example 1 second. Each 'Cn' denotes one of the transmitter's communication channels. Each 'Rn' denotes one of the wireless power receivers that receive power from wireless transmitter and then subsequently transmit electrical power to client devices.

During time-slice t**0**, transmitter uses channel C**1** to communicate with receiver R**1**, channel C**2** to communicate with receiver R**2**, C**3** for R**3**, and C**4** for R**4**, and there is no communication with receiver R**5**.

During time-slice t**1**, transmitter now uses channel C**1** to communicate with receiver R**5**, so that R**5** gets a turn receiving power, receiver R**2** continues communication with transmitter through channel C**2**, receiver R**3** continues with channel C**3**, and receiver R**4** continues with channel C**4**. There is no communication with receiver R**1**.

During time-slice t**2**, transmitter now uses channel C**2** to communicate with receiver R**1**, so that R**1** gets a turn receiving power, receiver R**3** continues communication with transmitter through channel C**3**, receiver R**4** continues with channel C**4**, and receiver R**5** continues with channel C**1**. There is no communication with receiver R**2**.

During a time slice while transmitter is in communication with a specific receiver, it may use that communication to get receiver power status from the receiver, which values transmitter uses to aim transmitter antennas at that receiver, to power receiver's client device. The system may use other methods to control aiming antennas at receivers, such as receiver beacon signal transmission and transmitter beacon signal reception. Transmitter may aim a sub-set of array antennas at each of the four receivers in communication.

The pattern continues through time while the receivers are schedule by the user to receiver power. More receivers may be added to those scheduled, or some may be removed. When there are more than the available transmitter channels (in this example 4), then the channels are shared over time (TDM) so that transmitter may communicate with any number of receivers. When there are not more, then the transmitter dedicates each channel to a specific receiver.

An exemplary distribution of communication channels employing TDM in wireless power transmission is depicted in a table with channels assignment for 5 client devices while the wireless power transmitter only allows 4 communication channels. Wireless power manager may employ TDM technique when a fifth client device R**5** is commanded to begin charge at time stage t**1**. Subsequently, at time stage t**1**, wireless power manager may command wireless power transmitter to cease communication using first communication channel C**1** with first client device R**1**, and starts real-time communication using first communication channel C**1** with fifth client device R**5**. Afterwards, finite amount of time later at time stage t**2**, wireless power manager may order wireless power transmitter to cease communication using second communication channel C**2** with second client device R**2**, and then wireless power transmitter may use second communication channel C**2** to re-start communica-

tion with first client device R1, and aims an antenna group at first client device R1. Subsequently, finite amount of time later at time stage t3, wireless power manager may order wireless power transmitter to cease communication with third client device R3 which was using third communication channel C3. Wireless power transmitter may now use third communication channel C3 to restart communication with second client device R2, and aims an antenna group at second client device R2. This process may continue until the amount of client devices to be powered changes.

FIG. **58** is a diagram **5800** of an exemplary potential interaction between wireless power receivers and wireless power transmitters, according to some embodiments. Diagram **5800** may describe a process about how TDM power transmission (software module) may operate in a wireless power transmitter. Specifically, the process may start at time t_0, where a wireless power device (D1) may be in reach of a wireless power transmitter, TDM power transmission may command the wireless power transmitters to assign an antenna group (GA) to power D1.

If D1 moves from the initial position, at time t_1, TDM power transmission may command the wireless power transmitter to change the numbers of antennas from the original group and assign an antenna group (GB1) to power D1. If at the same time another wireless power device (D2) comes in reach of a wireless power transmitter, the TDM power transmission may command the wireless power transmitter to assign another antenna group (GB2) to power D2. The wireless power transmitter may now be powering two wireless power receivers.

If both D1 and D2 move from their position, at time t_3, TDM power transmission may command the wireless power transmitter to change the numbers of antennas from the original group and assign an antenna group (GB1) to power D1, and assign another antenna group (GC2) to power D2. If two more wireless power devices (D3 and D4) come in reach of the wireless power transmitter, the TDM power transmission may command the wireless power transmitter to assign two more antenna groups (GC3 and GC4) to power D3 and D4. The wireless power transmitter may now be powering four devices and may have no more transmitting antennas available for additional wireless power receivers.

If an additional wireless power receiver (D5) comes in range of the wireless power transmitter, at time t_3 and no additional antennas are available for dedicating a new group to power D5, TDM power transmission may employ an antenna sharing techniques to make sure that all devices are receiving power. For example, TDM power transmission may switch antenna groups from one device to another at regular time intervals. If no other changes in location occur, for example from times t_4 to t_9, TDM power transmission may continue to switch groups from the wireless power receiver being transmitted power the most of the time, to the wireless power receiver being transmitted the least of the time.

FIG. **59** illustrates a diagram **5900** or exemplary potential interaction of wireless power receivers and wireless power transmitters that may be part of wireless power transmission system architecture. Diagram **5900** may provide an example of a wireless power receiver being served by a wireless power transmitter. Additional wireless power receivers may be served as they come in reach of the wireless power transmitter, according to some embodiments.

According to another embodiment, multiple wireless power transmitters may power together one or more receivers. At time t_0, a wireless power device (D1) may come in range of the wireless power transmitter. A processor may command the wireless power transmitter to assign an antenna group (GA) of all transmitter antennas to power client device D1.

At time t_1, the system begins to also power client device D2, and so transmitter replaces previous antenna group G_A with two new antenna groups G_{B1} for D1, which continues to be powered, and group G_{B2} for newly powered device D2. Since there are two groups, each gets half of the entire transmitter antenna array.

At time t_2, two more devices D3 and D4 begin to receiver power, so transmitter replaces previous two antenna groups G_{B1} and G_{B2} with four antenna groups, one for each client device (D1 D2 D3 D4) presently being powered: G_{C1} G_{C2} G_{C3} G_{C4}.

At time t_3, a fifth client device D5 is configured to receive power. However, the maximum allowed simultaneous antenna groups is 4. So, to power the 5 devices, Time Division Multiplexing must be used to simultaneously power 4 devices at once using the 4 antenna groups, with one of the 5 devices being not powered during each subsequent time interval t_n. Thus, at time t_3 the maximum of four antenna groups G_{C1} G_{C2} G_{C3} G_{C4} power client devices D5, D2, D3, D4 respectively. At time t_4, power stops to D2, power re-starts to D1, and D3, D4, D5 continue to receive power. The cycle pattern continues indefinitely until devices are charged.

6. Power Transmission Management

FIG. **60** is a flow diagram **6000** generally illustrating an exemplary method for transmitting wireless power to a device. The steps of this exemplary method are embodied in a computer readable medium containing computer readable code such that the steps are implemented when the computer readable code is executed by a computing device. In some implementations, certain steps of the method can be combined, performed simultaneously, performed in a different order, or omitted, without deviating from the objective of the method.

In FIG. **60**, the process begins when the client device starts **6067** the application on request from the user. In some embodiments, client device detects a receiver it is coupled to, and reads from receiver an identifier associated with receiver. In other embodiments, receiver is an inherent to client device and consequent client device already includes the identifier associated with receiver. In yet other embodiments, client device broadcasts or otherwise advertises the identifier associated with receiver to other devices in range.

Next client device communicates **6069** with a system management service through a suitable network connection, including intranets, local area networks (LAN), virtual private networks (VPN), wireless area networks (WAN), Bluetooth, Bluetooth Low Energy, Wi-Fi, ZigBee, and the like. In some embodiments, client device communicates the credentials associated with the user of client device, the identifier of receiver associated with the client device, and the like. system management service then authenticates **6071** the credentials associated with client device. In some embodiments, if the credentials cannot be authenticated the user is directed to register. In other embodiments, if the authentication fails the system management service denies access to the user.

Client device then detects **6073** a broadcast from transmitter and reads an identifier associated with transmitter. In some embodiments, transmitter broadcasts its presence and an identifier associated with it using Bluetooth, Bluetooth low energy (BTLE), Wi-Fi, or the like. Identifiers associated with transmitter can include the transmitter's MAC address, network address, serial number, and the like. client device

displays **6075** a representation of transmitter to the mobile device user via GUI. In some embodiments, GUI produces the representation of transmitter allowing a mobile device user to request power transmission from transmitter to client device. In other embodiments, GUI displays additional information, such as, for example the distance from transmitter to client device, the cost associated with receiving power from transmitter, and the like.

Next, client device receives **6077** a command from the mobile device user to being powering client device. client device sends request **6079** for wireless power delivery to system management service. In some embodiments, the request sent by client device includes credentials (e.g., user account credentials) associated with client device, an identifier associated with one or more nearby Transmitters, an identifier associated with client device, an identifier associated with a receiver coupled to the client device (if not integral to the device), billing instructions, and the like.

System management service then authenticates **6081** client device, verifies the billing configuration, and verifies if client device is authorized to receive wireless power. In some embodiments, system management service authenticates client device by comparing credentials contained within the request (e.g. user account credentials) and the identifier associated with client device to data stored in a database within cloud service provider. In other embodiments, system management service additionally verifies that the user's billing configuration is valid. system management service then determines **6083** if client device is authorized to receive power. In some embodiments, if the client device is not authorized the process ends. In other embodiments, the process continues to another process allowing the mobile device user to authorize the client device by adding additional funding to the account, request authorization from a third party, or the like.

System management service communicates **6085** with transmitter and commands it to power receiver associated with client device. In some embodiments, the system management service communicates with the transmitter using a suitable network connection, including intranets, local area networks (LAN), virtual private networks (VPN), wireless area networks (WAN), Bluetooth, Bluetooth Low Energy, Wi-Fi, ZigBee, and the like. In other embodiments, the command includes any number of suitable parameters for carrying out a desired method of charging, including desired power output, amount of time to charge, amount of power to transmit, and the like. In some embodiments, receiver is integral to client device. In other embodiments, receiver is a wireless receiver coupled and in electrical communication with one or more client devices.

Transmitter establishes **6087** communication with receiver and locates it in 3-D space. transmitter then uses its antennas to form a pocket of energy at the receiver **6089**. Next, receiver receives **6091** RF energy from the pocket formed by the transmitter and powers the client device.

FIG. **61** is a flow diagram **6100** generally illustrating an exemplary method for monitoring wireless power transmitted to a device. The steps of this exemplary method are embodied in a computer readable medium containing computer readable code such that the steps are implemented when the computer readable code is executed by a computing device. In some implementations, certain steps of the method can be combined, performed simultaneously, performed in a different order, or omitted, without deviating from the objective of the method.

In FIG. **61**, the process begins with transmitter reading **6151** power and energy data from receiver. In some embodiments, receiver is integral to client device. In other embodiments, receiver is a wireless receiver coupled and in electrical communication with one or more client devices. In some embodiments, the data includes the rate of power delivered from Wireless Power transmitter to receiver, the total energy transferred from Wireless Power transmitter to receiver, the current battery power level of client device, and the like.

Transmitter then communicates **6153** with system management service and informs it that it is charging client device. In some embodiments, transmitter additionally reports energy/power transmitted to fulfill the charging request for client device, the identifier of receiver, and the like.

Next, system management service bills **6155** the mobile device user for the energy sent from transmitter to client device, if required. system management service then communicates **6157** account information to client device. In some embodiments, account information includes billing information and other information associated with the current charging session, information from previous charging sessions, account balance information, charges associated with receiving wireless power during the current charging session, rate of power transmission from transmitter, and the like.

GUI displayed by client device shows **6159** that client device is being powered. In some embodiments, GUI displays the aforementioned account balance information, account information, and the like.

One or more of the wireless power transmitters, receivers, and/or the system management service then communicate **6161** usage and status information to information distribution service. In some embodiments, the usage and status information is used for running analytics on customer behavior, demographics, service quality, and the like. In some embodiments, information distribution service is hosted in a remote cloud. In other embodiments, information distribution service is hosted in a local network.

For example, a user having a smartphone walks into a coffee shop. The smartphone detects a wireless power transmitter operated by the coffee shop and reads transmitter's ID. The user then notices that the smartphone is low on power, and proceeds to command a mobile app to request local wireless power. The user may also have configured wireless power system management to do this automatically whenever and/or wherever wireless power is available. The smartphone then communicates its ID, its receiver's ID, and the transmitter's ID to the system management service. The system management service reviews its system database and finds the smartphone or its receiver, as well as the transmitter. The system management service then communicates with the transmitter and commands it to power the user's smartphone receiver. Transmitter then communicates with the receiver to determine the receiver's location, and transmits wireless energy to the receiver using pocket-forming techniques. The receiver proceeds to power the smartphone with this energy.

In another example, a user with a wearable device having a built-in wireless power receiver visits a friend's house, where the house equipped with a wireless power transmitter. The wearable device detects the house's wireless power transmitter and reads the transmitter's ID, and the homeowner's transmitter has configured the system management service to automatically power any wireless power receiver. The wearable device's receiver communicates its ID and transmitter's ID to the system management service, and the system management service then reviews its system data-

base and finds the wearable device, its receiver, and the transmitter. The system management service then communicates with the transmitter and commands it to power the wearable device's receiver. The transmitter then communicates with the receiver to determine receiver's location, and transmits wireless energy to the receiver using adaptive 3-D pocket-forming techniques. The receiver then powers the wearable device with this energy.

7. Measuring and Reporting Power Level

FIG. **62** is a flowchart of a method for monitoring battery performance **6200** in a wireless power transmission system, according to an embodiment. In some exemplary embodiments, the Wireless Power transmission system is capable of determining the present or actual rate at which the battery of an electronic device is charging, and compare that value with the expected reference rate. If the present rate is significantly less than the expected reference rate then the battery or related charging circuit within the electronic device may be malfunctioning and causing significantly less charging efficiency or performance.

When the Wireless Power transmission system detects this error condition, the system may then alert the system operator or user of the client device, or any other suitable party, so that the problem may be corrected and the electronic device battery charging system may no longer waste power when charging or stops taking longer periods of time to charge than it should.

In an alternative embodiment, the wireless power transmission system to monitors the charging rate of the client device from when the device was first put into service with the system, and then use this as a reference to compare against the present rate of charge for the device, so that if ever the present rate of charging for the device becomes less than the reference rate that was based on the initial rate of charge, then alerts would be generated by the system indicating that something is wrong with the device and it is taking too long to charge or wasting power when it is being charged.

In some exemplary embodiments, method for monitoring battery performance **6281** may start with step **6263**, where an operator or user installs and operates a wireless Power transmission system. Then, a client device may be paired with a wireless power receiver within the system, at step **6265**. Pairing may occur when a client electronic device detects that a power receiver is within a suitable range of proximity for a suitable amount of time. Then, it may proceed to check an internal database to determine if the power receiver is not already paired with another electronic device. If the power receiver is not already paired with another device, the client electronic device may associate its ID with the ID of the power receiver and update the internal database. Then, the electronic device may send a copy of the updated database record to the power transmitter. In this way the device may be ready to start changing wirelessly.

At step **6267**, the wireless power transmitter may continuously monitor the battery level of the client device to determine, at step **6269**, if the battery needs to be charged. In other embodiments, the wireless power transmitter may charge the client device according to a predefined schedule. The wireless power transmission system may automatically charge the battery of the client device whenever it is time to do so, or if the battery level is below full and the battery needs to be charged, or system may automatically charge battery in response to some other condition or situation that may be built into the system, or configured by the operator or user, or other.

If the wireless power transmitter determines that the client device needs to be charged, it may start transmitting power to the wireless power receiver connected to the client device, at step **6271**. To do so, the wireless power transmitter continuously communicate in real-time with the wireless power receiver.

During the charging period, at step **6273**, the receiver constantly sends the charge power values to the wireless power transmitter. Additionally, the client device may constantly send the battery level values to the wireless power transmitter, at step **6275**.

Using the values received at steps **6273** and **6275**, the wireless power transmitter is capable of calculating the charging rate of the client device, at step **6277**. In some embodiments, the wireless power transmitter will monitor his own real time clock circuit or other, to measure present real-time or clock time, in order to calculate the charging rate of the client device battery.

Then, at step **6279**, the wireless power transmitter may determine if the rate of charge of the client device is within an acceptable range or if its not. In some exemplary embodiments, the wireless power transmitter will look up in a reference table the expected charging rate for the particular client device; the unique identification or category of the device previously made known to the system either by operator, or user, or automatically by the client device communication of said categories from client device directly to the wireless power transmitter or other system computer of the wireless power transmission system. Said reference table is located within transmitter memory, or local database, or downloaded or communicated to transmitter from remote management or information service on a remote server.

In some embodiments, the reference charging rate expected of a particular client device is already stored in the transmitter's memory. Also, the rate of each category or model of client device that the transmitter is expected to charge, are all also stored in memory. These rates may have been already stored in memory of transmitter at the time of transmitter manufacture, or may have been uploaded to or communicated to transmitter from another system computer, such as a system management server that contains updated rates for all types, categories, or models of client devices that the wireless power transmission system is expected to charge.

If the wireless power transmitter detects that actual charging performance of device is below expected charging performance, then transmitter may alert a system operator, or the client device user, that battery or charging circuit or other of client devices is malfunctioning, may be losing power, may be taking too long to charge, and needs to be investigated or repaired or replaced, at step **6281**. In some embodiments, the wireless power transmitter is also capable of determining the root cause of the system malfunction, when the battery of the client device is not causing the low charging rate or loss of power.

In some embodiments, the wireless power transmitter communicates this information through automatic database replication, sending message across the system network between the transmitter and other system computers or through other suitable communication means. Furthermore, the operator or user may receive the alert and respond by configuring the wireless system to no longer wirelessly charge the client device, and then removing the client device from service so that it may be investigated, repaired or replaced or other suitable solutions.

If the wireless power transmitter determines that no evidence of a system or component fault is found in the data

analyzed, the wireless power transmitter may continue to charge the client device, and continuously check, at step **6283**, if the battery level of the client device is full. If the battery of the client device is not full, the wireless power transmitter may continue to transmit wireless power to the wireless power receiver connected to the client device to keep charging the client device. If the battery of the client device is already full or its time to stop charging the device, the wireless power transmitter stops charging the device, at step **6285**, and the process may end.

FIG. **63** is a sequence diagram **6300** of a method for monitoring battery performance, according to exemplary aspects of the present disclosure. Sequence diagram **6300** includes a client device **6352**, a system management computer **6373**, wireless power transmitter **6301**, wireless power receiver **6320** and user or operator **6375**.

System management computer first sends the expected charge rate **6355** of client device **6352** to the wireless power transmitter **6301**. Then, client device **6352** sends information about client device's **6373** battery level **6357**. Afterwards, wireless power transmitter **6301** starts delivering wireless power **6359** to wireless power receiver **6320**, which is connected to client device **6352**. Then, wireless power receiver constantly sends measurements **6361** of the amount power delivered to client device **6352**. Subsequently, client device **6352** sends latest battery level **6363** to wireless power transmitter **6301**. Using the measurements **6361** of the amount power delivered to client device **6352** and latest battery level **6363**, wireless power transmitter **6301** calculates the rate of charge of client device **6352**. In case the rate of charge of client device **6352** is bellow the threshold, wireless power transmitter sends and alert **6365** to user or operator **6375**. Then, user or operator **6375** takes an action **6367** in order to correct the error.

For example, a family has a wireless power transmission system installed in their home. One member of their family configures the system to wirelessly power and charge a smartphone. The smartphone is several years old. The system automatically charges the smartphone whenever the smartphone is within power range of the system and the battery level of the smartphone is low enough to warrant charge. The family has installed into the smartphone the software app downloaded from a public app store, which is the system management app for the wireless power transmission system. This app automatically communicates value of the battery level of the smartphone to the system. After charging the smartphone, the system observes that the smartphone took three times longer than it should have to completely charge up. The system then communicates an alert of this problem to the owner of the family system by sending the owner a text message with the name of the smartphone and a brief description of the problem. The owner subsequently purchases a replacement smartphone.

In another example, a user purchases a wearable product that goes on user's wrist. The product contains wireless power receiver. The wireless power transmitter is in user's bedroom, and each night user goes to bed wearing product the wearable on the wrist of user. The wireless power transmission system then automatically charges the battery within the wearable by transmitting power from the transmitter in the bedroom a distance away from the power receiver, to the power receiver within the wearable on the wrist of the user. Each night, the wearable battery charges back up.

Beginning with the first time that the transmitter charged the wearable client device, the transmitter computed the charge rate of the wearable's battery. The wireless power transmission system has no reference information about the battery's charge rate for this particular wearable product.

After over a year, the wireless power transmission system detects that the amount of time to charge the wearable battery is now longer than it took when the user first began wirelessly charging the wearable with the system. Subsequently, the system issues an alert to the user by sending an e-mail containing a message that the wearable of the user is now taking longer to charge. Subsequently, the user replaces the wearable product with the latest model.

8. Safely Transmitting Power

FIG. **64** shows a flowchart of a method **6400** for proscribing client devices from receiving power from a wireless power transmission system, based on proscribed circumstances of heath safety. The disclosed method may operate in one or more components of a wireless power transmission system. The wireless power transmission system may include one or more system computers, GUI system management software running on client devices, one or more remote information service servers, and one or more system management servers, among others. System computer may refer to one of the computers of a wireless power transmission system and is part of the communication network between all computers of the wireless power transmission system. The system computer may communicate through said network to any other system computer, and may be a wireless power transmitter, a wireless power receiver, a client device, a system management service server, and/or any other computing device. Examples of client devices may include smartphones, tablets, and music players, among others.

The remote information service server may be coupled to a system database which may be duplicated or distributed across all network computers operating in the wireless power transmission system. Said distributed system database along with the database distribution management software operating within all network computers may allow instant communication in the wireless power transmission system. Network computer may refer to any system computer, or the active remote information server, that is online and has a connection to the network of a particular wireless power transmission system.

The process may start at step **6469** when the wireless power transmission system (WPTS) boots up and runs a system checkup to make sure all communication channels work properly. Subsequently, at step **6471** the user may download and install the system management software app (GUI App) in client device for the WPTS, if this step has not already been done. This app may be made available at, downloaded, and installed from a public software app store or digital application distribution platform, such as Apple's iTunes, Google's Play Store, Amazon's App store, and the like. In other embodiments, the user may browse to a web page hosted by a computer or server where the user may command, control, or configure the WPTS. The app or web page may have a user interface that includes, but is not limited to, industry standard checkmark controls, or any other user interface control for specifying or controlling health safety operational parameters, displayed and described on the view screen of a client device, or web page served by a computer that manages the wireless power transmission system.

Following the process, at decision **6473**, the GUI app verifies if there are any proscriptions for power transmission enabled in the WPTS. If proscriptions for power transmission have been enabled, continues to step **6485** below, otherwise proscriptions for power transmission have not yet

been enabled, then at decision **6475**, GUI may display a message to the user asking if the user desires to enable health safety operational parameters for wireless power transmission. If the user does not accept to enable proscriptions, then WPTS allows power delivery without proscriptions, at step **6491**, and the process ends. If at decision **508** the user accepts to enable proscriptions, then at step **6477**, the GUI app may display a check list to user where be or she may specify the circumstances when wireless power should not be transmitted to the device in use by the user. Then, at step **6479**, the user specifies the proscribed circumstances which may include, but are not limited to, the following criteria:

1) If the client device is presently in movement, indicating that the user has the device on the user's person or is holding or wearing the device. Motion or movement of a client device may refer to a physical, 3-D movement of a client device relative to the transmitter transmitting power to the device, or relative to the spatial location of the transmitter, such that while in motion the client device may change its physical distance from the transmitter or may change its angle from with the antenna array in the transmitter.

2) If the client device is presently physically oriented in any attitude that is an indication that it is in use. For example, if the device is a mobile cell phone that is presently vertically oriented.

3) If the client device presently detects that it is within proximity to a user, such as if the device is being held to the user's face.

4) If the client device presently is placing a telephone call.

5) If the user is presently touching, tapping, or making finger gestures such as swiping, pinching, twirling, or interacting with the client device in any way.

6) If the client device is presently connected with a headset or any other external device.

Subsequently, at step **6487**, after the user specifies proscribed circumstances or criteria, applies proscribed circumstances policy throughout all system computers. Then, at step **6483**, WPTS updates Client device data records in its distributed database. The WPTS reads and verifies proscribed circumstances associated with the client device. Subsequently, at step **6485**, the WPTS reads and verifies proscribed circumstances associated with the client device. Next, at decision **6487**, if proscribed circumstances are present, then at step **6489**, power delivery is disabled, or if at decision **6487**, proscribed circumstances are not present, then power delivery is enabled at step **6489**. The process ends.

GUI app running on said client device may continually monitor the client device to detect if the present operation of said client device matches any of the proscribed circumstances of health safety. Monitoring the client device may include, but is not limited to, reading measurement hardware within said device that determines device's present velocity, yaw, pitch, or roll, or attitude by using accelerometers or gyroscopes internal to said client device, or a sensor that indices if device is help to face, or sensing any other aspect of the device that indicates if a proscribed circumstance is present

The health safety determination, of whether or not the client device is presently in a circumstance proscribed from receiving power from said transmission system, may be stored by the GUI app within the data record that describes control and configuration of said client device. Said record may be part of the WPTS's distributed database, a copy of which resides within said client device's memory. GUI app and other computers within the wireless power transmission system then automatically distribute said updated record throughout said system to keep all copies of said database, throughout the WPTS, identical.

An exemplary embodiment describes how a decision is made to transmit power to a client device. Within the system database, the record of a paired client device is associated with the record of the wireless power receiver attached or built within said client device.

If the user uses any user interface (GUI or web page) of a WPTS to manually command said client device be charged (from power received by said wireless power receiver), or if the user has used said user interface to configure the record of said wireless power receiver to automatically charge said client device, such as by time, name, or physical location, or other method, then, the record of said wireless power receiver will be updated by the wireless power transmitter that has present control of the database record of said wireless power receiver because it is the nearest wireless power transmitter to said wireless power receiver, to indicate that said wireless power receiver should presently close its output switch to allow power to output to said client device. Said record of said wireless power receiver is also distributed, by said wireless power transmitter, throughout said system for other wireless power transmitters to read.

Once said wireless power transmitter that controls said wireless power receiver determines it should transmit power to said wireless power receiver, it next examines the record of the client device associated or paired with said wireless power receiver, and will only transmit power to said wireless power receiver if said health safety determination does not presently proscribe transmission of power to said client device. If power transmission is not proscribed, then power transmitter may take the following actions:

A) Begins real-time communication with said receiver to get continuous feedback of amount of power received, in order to keep transmission antennas aimed at said receiver.

B) Begins power transmission to said receiver.

C) Commands receiver to close its electrical relay switch to connect and transmit electrical energy to client device.

If user changes said safety proscriptions, then said wireless power transmitter will re-determine if said wireless power receiver should receive power or not.

F. Wireless Power Transmission with Selective Range

1. Constructive Interference

FIG. **6**A is an exemplary system representing wireless power transmission principles that may be implemented during exemplary pocket-forming processes. A transmitter **601** comprising a plurality of antennas in an antenna array, may adjust the phase and amplitude of a power transmission waves **607**, among other attributes, being transmitted from each antenna of the transmitter **601**. In absence of any phase or amplitude adjustment, power transmission waves **607** may be transmitted from each of the antennas. In this case the waves being transmitted will arrive at different locations, with different phases; due to the different distances from each antenna element of the transmitter to receivers located at each location.

A receiver may receive multiple signals **607***a* from multiple antenna elements and the composite of those signal may be essentially zero, if the signals add destructively. Antenna elements of the transmitter may transmit the exact same power transmission signal (i.e., comprising power transmission waves having the same features), but however each of the power transmission signals **607***a* may arrive at the receiver, offset from each other by 180 degrees, and therefore these power transmission signals may "cancel" one another. Signals offsetting one another in this way may be referred to as "destructive interference." In contrast, in

so-called "constructive interference," signals **607***b* arrive at the receiver exactly "in phase" with one another, and therefore increase the amplitude of the signal, as shown in FIG. **6**B. In the illustrative example in FIG. **6**A, note that the phase of the transmit signals are the same at transmission and they ad up destructively at the receiver; whereas, in FIG. **6**B, the phase of the transmit signals are adjusted at transmit such that they arrive at the receiver in phase alignment and add constructively. In this illustrative example, there will be a pocket of energy located around the receiver in FIG. **6**B, and there will be a transmit null located around receiver in FIG. **6**A.

FIG. **7** depicts wireless power transmission with selective range **700**, where a transmitter **702** may produce pocket-forming for a plurality of receivers associated with electrical devices **701**. Transmitter **702** may generate pocket-forming through wireless power transmission with selective range **700**, which may include one or more wireless charging radii **704** and one or more radii of null in a particular physical location **706**. A plurality of electronic devices **701** may be charged or powered in wireless charging radii **704**. Thus, several spots of energy may be created, such spots may be employed for enabling restrictions for powering and charging electronic devices **701**. As an example, the restrictions may include operating specific electronics in a specific or limited spot, contained within wireless charging radii **704**. Furthermore, safety restrictions may be implemented by the use of wireless power transmission with selective range **700**, such safety restrictions may avoid pockets of energy over areas or zones where energy needs to be avoided, such areas may include areas including sensitive equipment to pockets of energy and/or people which do not want pockets of energy over and/or near them. In embodiments such as the one shown in FIG. **7**, the transmitter **702** may comprise antenna elements found on a different plane than the receivers associated with electrical devices **701** in the served area. For example the receivers of electrical devices **701** may be in a room where a transmitter **702** may be mounted on the ceiling. Selective ranges for establishing pockets of energy using power transmission waves, which may be represented as concentric circles by placing an antenna array of the transmitter **702** on the ceiling or other elevated location, and the transmitter **702** may emit power transmission waves that will generate 'cones' of energy pockets. In some embodiments, the transmitter **701** may control the radius of each charging radii **704**, thereby establishing intervals for service area to create pockets of energy that are pointed down to an area at a lower plane, which may adjust the width of the cone through appropriate selection of antenna phase and amplitudes.

FIG. **8** depicts wireless power transmission with selective range **800**, where a transmitter **802** may produce pocket-forming for a plurality of receivers **806**. Transmitter **802** may generate pocket-forming through wireless power transmission with selective range **800**, which may include one or more wireless charging spots **804**. A plurality of electronic devices may be charged or powered in wireless charging spots **804**. Pockets of energy may be generated over a plurality of receivers **806** regardless the obstacles **804** surrounding them. Pockets of energy may be generated by creating constructive interference, according to the principles described herein, in wireless charging spots **804**. Location of pockets of energy may be performed by tacking receivers **806** and by enabling a plurality of communication protocols by a variety of communication systems such as, Bluetooth® technology, infrared communication, Wi-Fi, FM radio, among others.

G. Exemplary System Embodiment Using Heat Maps

FIGS. **9**A and **9**B illustrate a diagram of architecture **900**A, **900**B for a wirelessly charging client computing platform, according to an exemplary embodiment. In some implementations, a user may be inside a room and may hold on his hands an electronic device (e.g. a smartphone, tablet). In some implementations, electronic device may be on furniture inside the room. The electronic device may include a receiver **920**A, **920**B either embedded to the electronic device or as a separate adapter connected to electronic device. Receivers **920**A, **920**B may include all the components described in FIG. **11**. A transmitter **902**A, **902**B may be hanging on one of the walls of the room right behind user. Transmitters **902**A, **902**B may also include all the components described in FIG. **11**.

As user may seem to be obstructing the path between receivers **920**A, **920**B and transmitters **902**A, **902**B, RF waves may not be easily aimed to the receivers **920**A, **920**B in a linear direction. However, since the short signals generated from receivers **920**A, **920**B may be omni-directional for the type of antenna element used, these signals may bounce over the walls **944**A, **944**B until they reach transmitters **902**A, **902**B. A hot spot **944**A, **944**B may be any item in the room which will reflect the RF waves. For example, a large metal clock on the wall may be used to reflect the RF waves to a user's cell phone.

A micro controller in the transmitter adjusts the transmitted signal from each antenna based on the signal received from the receiver. Adjustment may include forming conjugates of the signal phases received from the receivers and further adjustment of transmit antenna phases taking into account the built-in phase of antenna elements. The antenna element may be controlled simultaneously to steer energy in a given direction. The transmitter **902**A, **902**B may scan the room, and look for hot spots **944**A, **944**B. Once calibration is performed, transmitters **902**A, **902**B may focus RF waves in a channel following a path that may be the most efficient paths. Subsequently, RF signals **942**A, **942**B may form a pocket of energy on a first electronic device and another pocket of energy in a second electronic device while avoiding obstacles such as user and furniture. When scanning the service area, the room in FIGS. **9**A and **9**B, the transmitter may employ different methods. As an illustrative example, but without limiting the possible methods that can be used, the transmitter may detect the phases and magnitudes of the signal coming from the receiver and use those to form the set of transmit phases and magnitudes, for example by calculating conjugates of them and applying them at transmit. As another illustrative example, the transmitter may apply all possible phases of transmit antennas in subsequent transmissions, one at a time, and detect the strength of the pocket of energy formed by each combination by observing the signal from the receiver. Then the transmitter repeats this calibration time to time. Note that the transmitter does not have to search through all possible phases and can search through a set of phases that are more likely to result in strong pockets of energy based on prior calibration values. In yet another illustrative example, the transmitter may use preset values of transmit phases for the antennas to form pockets of energy directed to different locations in the room. The transmitter may for example scan the physical space in the room from top to bottom and left to right by using preset phase values for antennas in subsequent transmissions. The transmitter then detects the phase values that result in the strongest pocket of energy around the receiver by observing the signal from the receiver. There are other methods possible, without deviating from the spirit of what's described

herein. Result of the scan, whichever the method is used, is a heat-map of the room where the transmitter identifies the hot spots that indicate the best phase and magnitude values to use for transmit antennas in order to maximize the pocket of energy around the receiver.

The transmitters **902**A, **902**B, may use the Bluetooth connection to determine the location of the receivers **920**A, **920**B, and may use different non-overlapping parts of the RF band to to channel the RF waves to different receivers **920**A, **920**B. In some implementations, the transmitters **902**A, **902**B, may conduct a scan of the room to determine the location of the receivers **920**A, **920**B and forms pockets of energy that are orthogonal to each other, by virtue of non-overlapping RF transmission bands. Using multiple pockets of energy to direct energy to receivers may inherently be safer than some alternative power transmission methods since no single transmission is very strong, while the aggregate power transmission signal received at the receiver is strong.

H. Exemplary System Embodiment

FIG. **10**A illustrates wireless power transmission using multiple pocket-forming **1000**A that may include one transmitter **1002**A and at least two or more receivers **1020**A. Receivers **1020**A may communicate with transmitters **1002**A, which is further described in FIG. **11**. Once transmitter **1002**A identifies and locates receivers **1020**A, a channel or path can be established by knowing the gain and phases coming from receivers **1020**A. Transmitter **1002**A may start to transmit controlled RF waves **1042**A which may converge in three-dimensional space by using a minimum of two antenna elements. These RF waves **1042**A may be produced using an external power source and a local oscillator chip using a suitable piezoelectric material. RF waves **1042**A may be controlled by RFIC, which may include a proprietary chip for adjusting phase and/or relative magnitudes of RF signals that may serve as inputs for antenna elements to form constructive interference patterns (pocket-forming). Pocket-forming may take advantage of interference to change the directionality of the antenna elements where constructive interference generates a pocket of energy **1060**A and deconstructive interference generates a null. Receivers **1020**A may then utilize pocket of energy **1060**A produced by pocket-forming for charging or powering an electronic device, for example, a laptop computer **1062**A and a smartphone **1052**A and thus effectively providing wireless power transmission.

Multiple pocket forming **1000**A may be achieved by computing the phase and gain from each antenna of transmitter **1002**A to each receiver **1020**A. The computation may be calculated independently because multiple paths may be generated by antenna element from transmitter **1002**A to antenna element from receivers **1020**A.

I. Exemplary System Embodiment

FIG. **10**B is an exemplary illustration of multiple adaptive pocket-forming **1000**B. In this embodiment, a user may be inside a room and may hold on his hands an electronic device, which in this case may be a tablet **1064**B. In addition, smartphone **1052**B may be on furniture inside the room. Tablet **1064**B and smartphone **1052**B may each include a receiver either embedded to each electronic device or as a separate adapter connected to tablet **1064**B and smartphone **1052**B. Receiver may include all the components described in FIG. **11**. A transmitter **1002**B may be hanging on one of the walls of the room right behind user. Transmitter **1002**B may also include all the components described in FIG. **11**. As user may seem to be obstructing the path between receiver and transmitter **1002**B, RF waves **1042**B may not be easily aimed to each receiver in a line of sight fashion. However, since the short signals generated from receivers may be omni-directional for the type of antenna elements used, these signals may bounce over the walls until they find transmitter **1002**B. Almost instantly, a micro-controller which may reside in transmitter **1002**B, may recalibrate the transmitted signals, based on the received signals sent by each receiver, by adjusting gain and phases and forming a convergence of the power transmission waves such that they add together and strengthen the energy concentrated at that location—in contrast to adding together in a way to subtract from each other and diminish the energy concentrated at that location, which is called "destructive interference" and conjugates of the signal phases received from the receivers and further adjustment of transmit antenna phases taking into account the built-in phase of antenna elements. Once calibration is performed, transmitter **1002**B may focus RF waves following the most efficient paths. Subsequently, a pocket of energy **1060**B may form on tablet **1064**B and another pocket of energy **1060**B in smartphone **1052**B while taking into account obstacles such as user and furniture. The foregoing property may be beneficial in that wireless power transmission using multiple pocket-forming **1000**B may inherently be safe as transmission along each pocket of energy is not very strong, and that RF transmissions generally reflect from living tissue and do not penetrate.

Once transmitter **1002**B identities and locates receiver, a channel or path can be established by knowing the gain and phases coming from receiver. Transmitter **1002**B may start to transmit controlled RF waves **1042**B that may converge in three-dimensional space by using a minimum of two antenna elements. These RF waves **1042**B may be produced using an external power source and a local oscillator chip using a suitable piezoelectric material. RF waves **1042**B may be controlled by RFIC that may include a proprietary chip for adjusting phase and/or relative magnitudes of RF signals, which may serve as inputs for antenna elements to form constructive and destructive interference patterns (pocket-forming). Pocket-forming may take advantage of interference to change the directionality of the antenna elements where constructive interference generates a pocket of energy and deconstructive interference generates a null in a particular physical location. Receiver may then utilize pocket of energy produced by pocket-forming for charging or powering an electronic device, for example a laptop computer and a smartphone and thus effectively providing wireless power transmission.

Multiple pocket-forming **1000**B may be achieved by computing the phase and gain from each antenna of transmitter to each receiver. The computation may be calculated independently because multiple paths may be generated by antenna elements from transmitter to antenna elements from receiver.

An example of the computation for at least two antenna elements may include determining the phase of the signal from the receiver and applying the conjugate of the receive parameters to the antenna elements for transmission.

In some embodiments, two or more receivers may operate at different frequencies to avoid power losses during wireless power transmission. This may be achieved by including an array of multiple embedded antenna elements in transmitter **1002**B. In one embodiment, a single frequency may be transmitted by each antenna in the array. In other embodiments some of the antennas in the array may be used to transmit at a different frequency. For example, ½ of the antennas in the array may operate at 2.4 GHz while the other

½ may operate at 5.8 GHz. In another example, ⅓ of the antennas in the array may operate at 900 MHz, another ⅓ may operate at 2.4 GHz, and the remaining antennas in the array may operate at 5.8 GHz.

In another embodiment, each array of antenna elements may be virtually divided into one or more antenna elements during wireless power transmission, where each set of antenna elements in the array can transmit at a different frequency. For example, an antenna element of the transmitter may transmit power transmission signals at 2.4 GHz, but a corresponding antenna element of a receiver may be configured to receive power transmission signals at 5.8 GHz. In this example, a processor of the transmitter may adjust the antenna element of the transmitter to virtually or logically divide the antenna elements in the array into a plurality patches that may be fed independently. As a result, ¼ of the array of antenna elements may be able to transmit the 5.8 GHz needed for the receiver, while another set of antenna elements may transmit at 2.4 GHz. Therefore, by virtually dividing an array of antenna elements, electronic devices coupled to receivers can continue to receive wireless power transmission. The foregoing may be beneficial because, for example, one set of antenna elements may transmit at about 2.4 GHz and other antenna elements may transmit at 5.8 GHz, and thus, adjusting a number of antenna elements in a given array when working with receivers operating at different frequencies. In this example, the array is divided into equal sets of antenna elements (e.g., four antenna elements), but the array may be divided into sets of different amounts of antenna elements. In an alternative embodiment, each antenna element may alternate between select frequencies.

The efficiency of wireless power transmission as well as the amount of power that can be delivered (using pocket-forming) may be a function of the total number of antenna elements **1006** used in a given receivers and transmitters system. For example, for delivering about one watt at about 15 feet, a receiver may include about 80 antenna elements while a transmitter may include about 256 antenna elements. Another identical wireless power transmission system (about 1 watt at about 15 feet) may include a receiver with about 40 antenna elements, and a transmitter with about 512 antenna elements. Reducing in half the number of antenna elements in a receiver may require doubling the number of antenna elements in a transmitter. In some embodiments, it may be beneficial to put a greater number of antenna elements in transmitters than in a receivers because of cost, because there will be much fewer transmitters than receivers in a system-wide deployment. However, the opposite can be achieved, e.g., by placing more antenna elements on a receiver than on a transmitter as long as there are at least two antenna elements in a transmitter **1002**B.

II. Transmitters—Systems and Methods for Wireless Power Transmissions

Transmitters may be responsible for the pocket-forming, adaptive pocket-forming and multiple pocket-forming using the components described below. Transmitters may transmit wireless power transmission signals to receivers in the form of any physical media capable of propagating through space and being converted into useable electrical energy; examples may include RF waves, infrared, acoustics, electromagnetic fields, and ultrasound. It should be appreciated by those skilled in the art that power transmission signals may be most any radio signal, having any frequency or wavelength. Transmitters are described within with reference to RF transmissions, only as an example, and not to limit the scope to RF transmission only.

Transmitters may be located in number of locations, surfaces, mountings, or embedded structures, such as, desks, tables, floors, walls, and the like. In some cases, transmitters may be located in a client computing platforms, which may be any computing device comprising processors and software modules capable of executing the processes and tasks described herein. Non-limiting examples of client computing platforms may include a desktop computer, a laptop computer, a handheld computer, a tablet computing platform, a netbook, a smartphone, a gaming console, and/or other computing platforms. In other embodiments, the client computing platforms may be a variety of electronic computing devices. In such embodiments, each of the client computing platforms may have distinct operating systems, and/or physical components. The client computing platforms may be executing the same operating system and/or the client computing platforms may be executing different operating systems. The client computing platforms and or devices may be capable of executing multiple operating systems. In addition, box transmitters may contain several arrangements of printed circuit board (PCB) layers, which may be oriented in X, Y, or Z axis, or in any combination of these.

It should be appreciated that wireless charging techniques are not limited to RF wave transmission techniques, but may include alternative or additional techniques for transmitting energy to a receiver converting the transmitted energy to electrical power. Non-limiting exemplary transmission techniques for energy that can be converted by a receiving device into electrical power may include: ultrasound, microwave, resonant and inductive magnetic fields, laser light, infrared, or other forms of electromagnetic energy. In the case of ultrasound, for example, one or more transducer elements may be disposed so as to form a transducer array that transmits ultrasound waves toward a receiving device that receives the ultrasound waves and converts them to electrical power. In the case of resonant or inductive magnetic fields, magnetic fields are created in a transmitter coil and converted by a receiver coil into electrical power.

A. Components of Transmitter Devices

FIG. **11** illustrates a diagram of a system **1100** architecture for wirelessly charging client devices, according to an exemplary embodiment. The system **1100** may comprise a transmitter **1101** and a receiver **1120** that may each comprise an application-specific integrated circuit (ASIC). The transmitter **1101** ASIC may include one or more printed circuit boards (PCB) **1104**, one or more antenna elements **1106**, one or more radio frequency integrated circuits (RFIC) **1108**, one or more microcontrollers (MCs) **1110**, a communication component **1112**, a power source **1114**. The transmitter **1101** may be encased in a housing, which may allocate all the requested components for transmitter **1101**. Components in transmitter **1101** may be manufactured using meta-materials, micro-printing of circuits, nano-materials, and/or any other materials. It should be obvious to someone skilled in the art that the entire transmitter or the entire receiver can be implemented on a single circuit board, as well as having one or more of the functional blocks implemented in separate circuit boards.

1. Printed Circuit Boards **1104**

In some implementations, the transmitter **1101** may include a plurality of PCB **1104** layers, which may include antenna element **1106** and/or RFIC **1108** for providing greater control over pocket-forming and may increase response for targeting receivers. The PCB **1104** may mechanically support and electrically connect the electronic component described herein using conductive tracks, pads

and/or other features etched from copper sheets laminated onto a non-conductive substrate. PCBs may be single sided (one copper layer), double sided (two copper layers), and/or multi-layer. Multiple PCB **1104** layers may increase the range and the amount of power that could be transferred by transmitter **1101**. PCB **1104** layers may be connected to a single MC **1110** and/or to dedicated MCs **1110**. Similarly, RFIC **1108** may be connected to antenna element **1106** as depicted in the foregoing embodiments.

In some implementations, a box transmitter, including a plurality of PCB **1104** layers inside it may include antenna element **1108** for providing greater control over pocket-forming and may increase the response for targeting receivers. Furthermore, range of wireless power transmission may be increased by the box transmitter. Multiple PCB **1104** layers may increase the range and the amount of power waves (e.g., RF power waves, ultrasound waves) that could be transferred and/or broadcasted wirelessly by transmitter **1101** due the higher density of antenna element **1106**. The PCB **1104** layers may be connected to a single microcontroller **1110** and/or to dedicated microcontroller **1110** for each antenna element **1106**. Similarly, RFIC **1108** may control antenna element **1101** as depicted in the foregoing embodiments. Furthermore, box shape of transmitter **1101** may increase action ratio of wireless power transmission.

2. Antenna Elements

Antenna element **1106** may be directional and/or omni-directional and include flat antenna elements, patch antenna elements, dipole antenna elements, and any other suitable antenna for wireless power transmission. Suitable antenna types may include, for example, patch antennas with heights from about ⅛ inch to about 6 inches and widths from about ⅛ inch to about 6 inches. The shape and orientation of antenna element **1106** may vary in dependency of the desired features of transmitter **1101**; orientation may be flat in X, Y, and Z axis, as well as various orientation types and combinations in three dimensional arrangements. Antenna element **1106** materials may include any suitable material that may allow RF signal transmission with high efficiency, good heat dissipation and the like. The amount of antenna elements **1106** may vary in relation with the desired range and power transmission capability on transmitter **1101**; the more antenna elements **1106**, the wider range and higher power transmission capability.

Antenna element **1106** may include suitable antenna types for operating in frequency bands such as 900 MHz, 2.5 GHz or 5.8 GHz as these frequency bands conform to Federal Communications Commission (FCC) regulations part 18 (industrial, scientific, and medical equipment). Antenna element **1106** may operate in independent frequencies, allowing a multichannel operation of pocket-forming.

In addition, antenna element **1106** may have at least one polarization or a selection of polarizations. Such polarization may include vertical polarization, horizontal polarization, circularly polarized, left hand polarized, right hand polarized, or a combination of polarizations. The selection of polarizations may vary in dependency of transmitter **1101** characteristics. In addition, antenna element **1106** may be located in various surfaces of transmitter **1101**. Antenna element **1106** may operate in single array, pair array, quad array and any other suitable arrangement that may be designed in accordance with the desired application.

In some implementations, the entire side of the printed circuit board PCB **1104** may be closely packed with antenna element **1106**. The RFIC **1108** may connect to multiple antenna elements **1106**. Multiple antenna elements **1106** may surround a single RFIC **1108**.

3. Radio Frequency Integrated Circuits

The RFIC **1108** may receive an RF signal from the MC **1110**, and split the RF signal into multiple outputs, each output linked to an antenna element **1106**. For example, each RFIC **1108** may be connected to four antenna elements **1106**. In some implementations, each RFIC **1108** may be connected to eight, sixteen, and/or multiple antenna elements **1106**.

The RFIC **1104** may include a plurality of RF circuits that may include digital and/or analog components, such as, amplifiers, capacitors, oscillators, piezoelectric crystals and the like. RFIC **1104** may control features of antenna element **1106**, such as gain and/or phase for pocket-forming and manage it through direction, power level, and the like. The phase and the amplitude of pocket-forming in each antenna element **1106** may be regulated by the corresponding RFIC **1108** in order to generate the desired pocket-forming and transmission null steering. In addition, RFIC **1108** may be connected to MC **1110**, which may utilize digital signal processing (DSP), ARM, PIC-Class microprocessor, central processing unit, computer, and the like. The lower number of RFICs **1108** present in the transmitter **1101** may correspond to desired features such as lower control of multiple pocket-forming, lower levels of granularity, and a less expensive embodiment. In some implementations, RFIC **1108** may be coupled to one or more MCs **1110**, and MC **1110** may be included into an independent base station or into the transmitter **1101**.

In some implementations of transmitter **1101**, the phase and the amplitude of each pocket-forming in each antenna element **1106** may be regulated by the corresponding RFIC **1108** in order to generate the desired pocket-forming and transmission null steering. RFIC **1108** singled coupled to each antenna element **1106** may reduce processing requirement and may increase control over pocket-forming, allowing multiple pocket-forming and a higher granular pocket-forming with less load over MC **1110**, and a higher response of higher number of multiple pocket-forming may be allowed. Furthermore, multiple pocket-forming may charge a higher number of receivers and may allow a better trajectory to such receivers.

RFIC **1108** and antenna element **1106** may operate in any suitable arrangement that may be designed in accordance with the desired application. For example, transmitter **1101** may include antenna element **1106** and RFIC **1108** in a flat arrangement. A subset of 4, 8, 16, and/or any number of antenna elements **1106** may be connected to a single RFIC **1108**. RFIC **1108** may be directly embedded behind each antenna element **1106**; such integration may reduce losses due the shorter distance between components. In some implementations, a row or column of antenna elements **1106** may be connected to a single MC **1110**. RFIC **1108** connected to each row or column may allow a less expensive transmitter **1101** that may produce pocket-forming by changing phase and gain between rows or columns. In some implementations, the RFIC **1108** may output between 2-8 volts of power for the receiver **1120** to obtain.

In some implementations, a cascade arrangement of RFICs **1108** may be implemented. A flat transmitter **1101** using a cascade arrangement of RFICs **1108** may provide greater control over pocket-forming and may increase response for targeting receivers **1106**, as well as a higher reliability and accuracy may be achieved because multiple redundancy of RFICs **1108**.

4. Microcontrollers

The MC **1110** may comprise a processor running ARM and/or DSP. ARM is a family of general purpose micropro-

cessors based on a reduced instruction set computing (RISC). A DSP is a general purpose signal processing chip may provide a mathematical manipulation of an information signal to modify or improve it in some way, and can be characterized by the representation of discrete time, discrete frequency, and/or other discrete domain signals by a sequence of numbers or symbols and the processing of these signals. DSP may measure, filter, and/or compress continuous real-world analog signals. The first step may be conversion of the signal from an analog to a digital form, by sampling and then digitizing it using an analog-to-digital converter (ADC), which may convert the analog signal into a stream of discrete digital values. The MC **1110** may also run Linux and/or any other operating system. The MC **1110** may also be connected to Wi-Fi in order to provide information through a network **1140**.

MC **1110** may control a variety of features of RFIC **1108** such as, time emission of pocket-forming, direction of the pocket-forming, bounce angle, power intensity and the like. Furthermore, MC **1110** may control multiple pocket-forming over multiple receivers or over a single receiver. Transmitter **1101** may allow distance discrimination of wireless power transmission. In addition, MC **1110** may manage and control communication protocols and signals by controlling communication component **1112**. MC **1110** may process information received by communication component **1112** that may send and receive signals to and from a receiver in order to track it and concentrate radio frequency signals **1142** (i.e., pockets of energy) on it. Other information may be transmitted from and to receiver **1120**; such information may include authentication protocols among others through a network **1140**.

The MC **1110** may communicate with the communication component **1112** through serial peripheral interface (SPI) and/or inter-integrated circuit (I^2C) protocol. SPI communication may be used for short distance, single master communication, for example in embedded systems, sensors, and SD cards. Devices communicate in master/slave mode where the master device initiates the data frame. Multiple slave devices are allowed with individual slave select lines. I^2C is a multi-master, multi-slave, single-ended, serial computer bus used for attaching low-speed peripherals to computer motherboards and embedded systems

5. Communications Component

Communication component **1112** may include and combine Bluetooth technology, infrared communication, Wi-Fi, FM radio among others. MC **1110** may determine optimum times and locations for pocket-forming, including the most efficient trajectory to transmit pocket forming in order to reduce losses because obstacles. Such trajectory may include direct pocket-forming, bouncing, and distance discrimination of pocket-forming. In some implementations, the communication component **1112** may communicate with a plurality of devices, which may include receivers **1120**, client devices, or other transmitters **1101**.

6. Power Source **1101**

Transmitters **1101** may be fed by a power source **1114** that may include AC or DC power supply. Voltage, power, and current intensity provided by power source **1114** may vary in dependency with the required power to be transmitted. Conversion of power to radio signal may be managed by MC **1110** and carried out by RFIC **1108** that may utilize a plurality of methods and components to produce radio signals in a wide variety of frequencies, wavelength, intensities, and other features. As an exemplary use of a variety of methods and components for radio signal generation, oscillators and piezoelectric crystals may be used to create and change radio frequencies in different antenna elements **1106**. In addition, a variety of filters may be used for smoothing signals as well as amplifiers for increasing power to be transmitted.

Transmitter **1101** may emit RF power waves that are pocket-forming with a power capability from few watts to a predetermined number of watts required by a particular chargeable electronic device. Each antenna may manage a certain power capacity. Such power capacity may be related with the application

7. Housing

In addition to a housing, an independent base station may include MC **1110** and power source **1114**, thus, several transmitters **1101** may be managed by a single base station and a single MC **1110**. Such capability may allow the location of transmitters **1101** in a variety of strategic positions, such as ceiling, decorations, walls, and the like. Antenna elements **1106**, RFIC **1108**, MC **1110**, communication component **1112**, and power source **1114** may be connected in a plurality of arrangements and combinations, which may depend on the desired characteristics of transmitter **1101**.

FIG. **23** illustrates wireless power transmission system **2300** comprising a portable transmitter **2301** with a power plug which may connect a portable wireless transmitter to one or more power outlets, according to an exemplary embodiment. Portable wireless transmitter **2301** may include antenna elements in a flat arrangement. Portable wireless transmitter **2301** may be connected to a power source through one or more power plug **2370**, such power plug **2370** may comply with the standard of each country and/or region. Power plug **2370** may be intended to connect portable wireless transmitter **2301** to one or more power outlet on the walls, floors, ceilings and/or electric adapters.

In order to increase portability of portable wireless transmitter **2301**, power plug **2370** may be foldable, telescopic, ultra-compact and the like. Such features may reduce size for transportation and for pocketing. Portable wireless transmitter **2301** may be built into a housing **2306**, which may provide additional protection against water, high temperature, sand, bugs, shocks, vibration and other rough conditions which may be a threat to the integrity of portable wireless transmitter **2301**. Thus, housing **2306** may be made using a plurality of materials which may provide the forgoing characteristics.

FIG. **24** illustrates a wireless power transmission system **2400** comprising a transmitter **2401** where a plurality of power plugs connect a portable wireless transmitter to a variety of power sources and/or electric adapters, according to an exemplary embodiment. FIG. **24** depicts a portable wireless transmitter **2401** showing different power plugs, such power plug may include a USB adapter **2470***b*, and a cigarette lighter plug **2470***c*. USB adapter **2470***b* may be used for receive power from any device having a USB port. These devices may include, laptops, Smart TVs, tablets and the like. Cigarette lighter plug **2470***c* may be used for receive power from any cigarette lighter socket, such as the used in cars. In addition, portable wireless transmitter **2401** may include a variety of power plugs **2470***a*, such power plugs **2470***a* may vary in dependency with the final application.

FIG. **25** illustrates a wireless power transmission system **2500** where a transmitter **2501** may include a button **2572** which upon activation may create at least one pocket of energy **2504** in its top surface. A smartphone **2552** operatively coupled to a receiver (not shown), upon being placed atop such surface, may receive power wirelessly by utilizing

the aforementioned pocket of energy **2504**. This configuration for wireless power transmission **2500** can be beneficial whenever smartphone **2552** cannot communicate its location by to transmitter **2501**, for example whenever smartphone **2552** runs out of power completely. Communication may refer to the information represented as data sent from one computer to one or more computers or processors of the wireless power transmission system. The data takes the form of a series of bytes, where each byte is 8 binary bits, and each binary bit is the numerical value of either '0' or '1.' A bit is communicated from one computer to another electrically or electronically by representing the '0' and the '1' as discreet or different electrical voltage or current or phase or frequency values. A bit is communicated from one computer to another wirelessly by representing the '0' and the '1' as radio frequency (RF) energy. In addition, smartphone **2552** may charge faster because of its proximity to transmitter **2501**. An even further advantage of this configuration is that if the user decides to remove smartphone **2552** (after smartphone **2552** has built the minimum charge for establishing communication with transmitter **2501**) from the surface of transmitter **2501**, smartphone **2552** may still receive power wirelessly through pocket-forming. Thus, the mobility of smartphone **2552** may not be compromised.

B. Exemplary Method of Transmitting Power

FIG. **12** is a method for determining receiver location **1200** using antenna element. Method for determining receiver location **1200** may be a set of programmed rules or logic managed by MC. The process may begin step **1201** by capturing first signal with a first subset of antennas from the antenna array. The process may follow immediately by switching to a different subset of antenna element and capturing, at a next step **1203**, a second signal with a second subset of antennas. For example, a first signal may be captured with a row of antennas and the second capturing may be done with a column of antennas. A row of antennas may provide a horizontal degree orientation such an azimuth in a spherical coordinate system. A column of antennas may provide a vertical degree orientation such as elevation. Antenna elements used for capturing first signal and capturing second signal may be aligned in straight, vertical, horizontal, or diagonal orientation. The first subset and second subset of antennas may be aligned in a cross like structure in order to cover degrees around transmitter.

Once both vertical and horizontal values have been measured, the MC may, in a next step **1205**, determine the appropriate values of phase and gain for the vertical and horizontal antenna elements used to capture the signal. Appropriate values for phase and gain may be determined by the relationship of the position of the receiver to the antenna. The values may be used by MC in order to adjust antenna elements to form pockets of energy that may be used by a receiver in order to charge an electronic device.

Data pertaining to initial values of all antenna elements in transmitter may be calculated and stored previously for use by MC in order to assist in the calculation of appropriate values for antenna elements. In a next step, **1207**, after the appropriate values for the vertical and horizontal antennas used for capturing the signal have been determined, the process may continue by using the stored data to determine appropriate values for all the antennas in the array. Stored data may contain initial test values of phase and gain for all antenna elements in the array at different frequencies. Different sets of data may be stored for different frequencies and MC may select the appropriate data set accordingly. In a next step **1209**, MC may then adjust all antennas through RFIC in order to form pockets of energy at the appropriate locations.

C. Array Subset Configuration

FIG. **13**A illustrates an example embodiment of an array subset configuration **1300**A that may be used in method for determining receiver location. Transmitter may include an array of antennas **1306**A. A row of antennas **1368**A may be used first for capturing a signal sent by a receiver. Row of antennas **1368**A may then transfer the signal to the RFIC, where the signal may be converted from a radio signal to a digital signal and passed on to MC for processing. MC may then determine appropriate adjustments for phase and gain in row of antennas **1368**A in order to form pockets of energy at the appropriate locations based on the receiver locations. A second signal may be captured by a column of antennas **1370**A. Column of antennas **1370**A may then transfer the signal to the RFIC, where the signal may be converted from a radio signal to a digital signal and passed on to MC for processing. MC may then determine appropriate adjustments for phase and gain in column of antennas **1370**A in order to form pockets of energy at the appropriate locations based on the receiver locations. Once the appropriate adjustments have been determined for row of antennas **1368**A and column of antennas **1370**A MC may determine the appropriate values for the rest of antenna elements **1306**A in array of antennas **1368**A by using previously stored data about the antennas and adjusting accordingly with the results from row of antennas **1368**A and column of antennas **1370**A.

D. Configurations for Transmitters, Transmitter Components, Antenna Tiles, and Systems Related to Transmitters

1. Exemplary System

FIG. **13**B illustrates another example embodiment of an array subset configuration **1300**B. In array subset configuration **1300**B, both initial signals are captured by two diagonal subsets of antennas. The process follows the same path, such that each subset is adjusted accordingly. Based on adjustments made and the previously stored data, the rest of antenna elements **1306**B in array of antennas are adjusted.

2. Flat Transmitter

FIG. **14** depicts a flat transmitter **1402** in a front view and a several embodiments of rear views. Transmitter **1402** may include antenna element **1406** and RFIC **1408** in a flat arrangement. RFIC **1408** may be directly embedded behind each antenna element **1406**; such integration may reduce losses due the shorter distance between components.

In one embodiment (i.e., View **1**) in transmitter **1402**, the phase and the amplitude of the pocket-forming for each antenna element **1406** may be regulated by the corresponding RFIC **1408** in order to generate the desired pocket-forming and transmission null steering. RFIC **1408** singled coupled to each antenna element **1406** may reduce processing requirement and may increase control over pocket-forming, allowing multiple pocket-forming and a higher granular pocket-forming with less load over MC **1410**; thus, a higher response of higher number of multiple pocket-forming may be allowed. Furthermore, multiple pocket-forming may charge a higher number of receivers and may allow a better trajectory to such receivers. As described in the embodiment of FIG. **11**, RFIC **1408** may be coupled to one or more MCs **1410**, and microcontroller **1410** may be included into an independent base station or into the transmitter **1402**.

In another embodiment (i.e., View **2**), a subset of 4 antenna elements **1406** may be connected to a single RFIC **1408**. The lower number of RFICs **1408** present in the transmitter **142** may correspond to desired features such as:

lower control of multiple pocket-forming, lower levels of granularity and a. less expensive embodiment. As described in the embodiment of FIG. **11**, RFIC **1408** may be coupled to one or more MCs **1410**, and microcontroller **1410** may be included into an independent base station or into the transmitter **1402**.

In yet another embodiment (i.e., View **3**), transmitter **1402** may include antenna element **1406** and RFIC **1408** in a flat arrangement. A row or column of antenna elements **1406** may be connected to a single MC **1410**. The lower number of RFICs **1408** present in the transmitter **1402** may correspond to desired features such as: lower control of multiple pocket-forming, lower levels of granularity and a less expensive embodiment. RFIC **1408** connected to each row or column may allow a less expensive transmitter **1402**, which may produce pocket-forming by changing phase and gain between rows or columns. As described in the embodiment of FIG. **11**, RFIC **1408** may be coupled to one or more MCs **1410**, and microcontroller **1410** may be included into an independent base station or into the transmitter **1402**.

In some embodiments (i.e., View **4**), transmitter **1402** may include antenna element **1406** and RFIC **1408** in a flat arrangement. A cascade arrangement is depicted in this exemplary embodiment. Two antenna elements **1406** may be connected to a single RFIC **1408** and this in turn to a single RFIC **1408**, which may be connected to a final RFIC **1408** and this in turn to one or more MCs **1410**. Flat transmitter **1402** using a cascade arrangement of RFICs **1408** may provide greater control over pocket-forming and may increase response for targeting receivers. Furthermore, a higher reliability and accuracy may be achieved because multiple redundancy of RFICs **1408**. As described in the embodiment of FIG. **11**, RFIC **1408** may be coupled to one or more MCs **1410**, and microcontroller **1410** may be included into an independent base station or into the transmitter **1402**.

3. Multiple Printed Circuit Board Layers

FIG. **15**A depicts a transmitter **1502**A, which may include a plurality of PCB layers **1204**A that may include antenna element **1506**A for providing greater control over pocket-forming and may increase response for targeting receivers. Multiple PCB layers **1504**A may increase the range and the amount of power that could be transferred by transmitter **1502**A. PCB layers **1504**A may be connected to a single MC or to dedicated MC. Similarly, RFIC may be connected antenna element **1506**A as depicted in the foregoing embodiments. RFIC may be coupled to one or more MCs. Furthermore, MCs may be included into an independent base station or into the transmitter **1502**A.

4. Box Transmitter

FIG. **15**B depicts a box transmitter **1502**B, which may include a plurality of PCB layers **1504**B inside it, which may include antenna element **1506**B for providing greater control over pocket-forming and may increase response for targeting receivers. Furthermore, range of wireless power transmission may be increased by the box transmitter **1502**B. Multiple PCB layers **1504**B may increase the range and the amount of RF power waves that could be transferred or broadcasted wirelessly by transmitter **1502**B due the higher density of antenna element **1506**B. PCB layers **1504**B may be connected to a single MC or to dedicated MC for each antenna element **1506**B. Similarly, RFIC may control antenna element **1506**B as depicted in the foregoing embodiments. Furthermore, box shape of transmitter **800** may increase action ratio of wireless power transmission; thus, box transmitter **1502**B may be located on a plurality of surfaces such as, desks, tables, floors, and the like. In addition, box transmitter **1502**B may comprise several arrangements of PCB layers **1504**B, which may be oriented in X, Y, and Z axis, or any combination these. The RFIC may, be coupled to one or more MCs. Furthermore, MCs may be included into an independent base station or into the transmitter **1502**B.

5. Irregular Arrays for Various Types of Products

FIG. **16** depicts a diagram of architecture **1600** for incorporating transmitter **1602** into different devices. For example, the flat transmitter **1602** may be applied to the frame of a television **1646** or across the frame of a sound bar **1648**. Transmitter **1602** may include multiple tiles **1650** with antenna elements and RFICs in a flat arrangement. The RFIC may be directly embedded behind each antenna elements; such integration may reduce losses due the shorter distance between components.

For example, a television **1646** may have a bezel around a television **1646**, comprising multiple tiles **1650**, each tile comprising of a certain number of antenna elements. For example, if there are 20 tiles **1650** around the bezel of the television **1646**, each tile **1650** may have 24 antenna elements and/or any number of antenna elements.

In tile **1650**, the phase and the amplitude of each pocket-forming in each antenna element may be regulated by the corresponding RFIC in order to generate the desired pocket-forming and transmission null steering. RFIC singled coupled to each antenna element may reduce processing requirement and may increase control over pocket-forming, allowing multiple pocket-forming and a higher granular pocket-forming with less load over microcontroller, thus, a higher response of higher number of multiple pocket-forming may be allowed. Furthermore, multiple pocket-forming may charge a higher number of receivers and may allow a better trajectory to such receivers.

RFIC may be coupled to one or more microcontrollers, and the microcontrollers may be included into an independent base station or into the tiles **1650** in the transmitter **1602**. A row or column of antenna elements may be connected to a single microcontroller. In some implementations, the lower number of RFICs present in the transmitters **1602** may correspond to desired features such as: lower control of multiple pocket-forming, lower levels of granularity and a less expensive embodiment. RFICs connected to each row or column may allow reduce costs by having fewer components because fewer RFICs are required to control each of the transmitters **1602**. The RFICs may produce pocket-forming power transmission waves by changing phase and gain, between rows or columns.

In some implementations, the transmitter **1602** may use a cascade arrangement of tiles **1650** comprising RFICs that may provide greater control over pocket-forming and may increase response for targeting receivers. Furthermore, a higher reliability and accuracy may be achieved from multiple redundancies of RFICs.

In one embodiment, a plurality of PCB layers, including antenna elements, may provide greater control over pocket-forming and may increase response for targeting receivers. Multiple PCB layers may increase the range and the amount of power that could be transferred by transmitter **1602**. PCB layers may be connected to a single microcontroller or to dedicated microcontrollers. Similarly, RFIC may be connected to antenna elements.

A box transmitter **1602** may include a plurality of PCB layers inside it, which may include antenna elements for providing greater control over pocket-forming and may increase response for targeting receivers. Furthermore, range of wireless power transmission may be increased by the box

transmitter **1602**. Multiple PCB layers may increase the range and the amount of RF power waves that could be transferred or broadcasted wirelessly by transmitter **1602** due the higher density of antenna elements. PCB layers may be connected to a single microcontroller or to dedicated microcontrollers for each antenna element. Similarly, RFIC may control antenna elements. The box shape of transmitter **1602** may increase action ratio of wireless power transmission. Thus, box transmitter **1602** may be located on a plurality of surfaces such as, desks, tables, floors, and the like. In addition, box transmitter may comprise several arrangements of PCB layers, which may be oriented in X, Y, and Z axis, or any combination these.

6. Plurality of Antenna Elements

FIG. **17** is an example of a transmitter configuration **1700** that includes a plurality of antenna elements **1706**. Antenna element **1706** may form an array by arranging rows of antennas **1768** and columns of antennas **1770**. Transmitter configuration may include at least one RFIC **1708** to control features of antenna element **1706**, such as gain and/or phase for pocket-forming and manage it through direction, power level, and the like. The array of antenna elements **1706** may be connected to a MC **1710**, which may determine optimum times and locations for pocket-forming, including the most efficient trajectory to transmit pocket forming in order to reduce losses because of obstacles. Such trajectory may include direct pocket-forming, bouncing, and distance discrimination of pocket-forming.

A transmitter device may utilize antenna element **1706** to determine the location of a receiver in order to determine how to adjust antenna element **1706** to form pockets of energy in the appropriate location. A receiver may send a train signal to transmitter in order to provide information. The train signal may be any conventional know signals that may be detected by antenna element **1706**. The signal sent by receiver may contain information such as phase and gain.

7. Enhanced Wireless Power Transmitter Configurations

FIG. **26** illustrates a block diagram of an enhanced wireless power transmitter **2601** which may be used for wireless power transmission, according to an embodiment. Transmitter **2601** may include a housing **2674**, at least two or more antenna elements **2606**, at least one receiving (Rx) RF integrated circuit (RFIC) **2626**, a plurality of transmitting (Tx) RF integrated circuit (RFIC) **2608**, at least one digital signal processor (DSP) and/or micro-controller **2610**, and/or one communications component **2612**. Micro-controller **2610** may be included into an independent base station or into the transmitter **2601**. RF input signals **2642** may be produced using a power source **2614** and a local oscillator chip (not shown) using a piezoelectric material, or may be from other wireless sources (not shown), such as from a frequency chip, Bluetooth, and Wi-Fi.

Housing **2674** may be made of any material which may allow for signal or wave transmission and/or reception, for example plastic or hard rubber. Antenna elements **2606** may include antenna types for operating in frequency bands such as 900 MHz, 2.5 GHz or 5.8 GHz as these frequency bands conform to Federal Communications Commission (FCC) 47 CFR Part 18—Industrial, Scientific, and Medical Equipment. Antenna elements **2606** may include vertical or horizontal polarization, right hand or left hand polarization, elliptical polarization, and/or other polarizations as well as polarization combinations. Antennas may be omnidirectional and/or directional antennas. Omnidirectional antennas are a class of antenna which radiates radio wave power uniformly in all directions in one plane. Directional antennas may be antennas or an array of antennas at a wireless power transmitter that can have their direction or phase adjusted to control where the wireless pockets of energy will be available in 3-D physical space within power range of the transmitter. Antenna types may include, for example, patch antennas with heights from about ⅛ of an inch to about 8 inches and widths from about ⅛ of an inch to about 6 inches. Other antenna elements **2606** types that may be used include meta-materials based antennas, dipole antennas, and planar inverted-F antennas (PIFAs), amongst others.

Transmitter **2601** may include a plurality of arrangements in which antenna elements **2606** may be connected to dedicated Rx RFIC **2626** or to Tx RFICs **2608**. Arrangements may include different configurations, such as a dedicated row or column of antenna elements **2606** coupled to Rx RFIC **2626**, and at least two or more rows or columns of antenna elements **2606** coupled to Tx RFICs **2608**. Rx RFIC **2626** may include a proprietary chip for adjusting phases and/or relative magnitudes of frequency of RF input signals **2642** collected from the dedicated set/configuration antenna elements **2606** for reception of RF input signals **2642**. Rx RFIC may be designed to include hardware and logic elements specifically dedicated for reception and processing of RF input signals **2642**, which are not included as components of TX RFICs **2608**.

In present embodiment of the enhanced wireless transmitter 24 RFICs may be connected to **2674** antenna elements **2606** and configured to allow operation of Rx RFIC as the dedicated receiver of RF input signals **2642** operatively coupled to a dedicated column of at least two or more antenna elements **2606**, depending on the transmitter **2601** configuration and operation, for example, eight antenna elements **2606**. The remaining 23 Tx RFICs **2608** may be operatively coupled to a set/configuration of antenna elements **2606**, other than those used to receive RF input signals **2642** by Rx RFIC. Tx RFICs may be coupled to transmitting antenna elements **2606** depending on control signals from micro-controller **2610**.

Micro-controller **2610** may include a proprietary algorithm to implement control of Rx RFIC **2626** and to allow operation of Rx RFIC **2626** using a switching control which enables monitoring of reception separately from transmission without overlapping in the operation of Rx RFIC **2626** and Tx RFICs **2608**. RF input signals **2642** may be sampled at once after Rx RFIC **2626** may be allowed to receive by switching control in micro-controller **2610**.

After the operation of Rx RFIC **2626**, Tx RFICs **2608** may implement wireless power transmission to receiver. Micro-controller **2601** may select a column of antenna elements **2606**, a row of antenna elements **2606**, or any interpolation of arrangement of antenna elements **2606** to couple with Tx RFICs **2608**, depending on location from which wireless power is to be transmitted.

Micro-controller **2610** may also process information sent by receiver through communications component **2612** for determining optimum times and locations for pocket-forming. Communications component **2612** may be based on standard wireless communication protocols which may include Bluetooth, Wi-Fi or ZigBee. In addition, communications component **2612** may be used to transfer other information, such as an identifier for the device or user, battery level, location, or other such information. Other communications component **2612** may be possible, including radar, infrared cameras or sound devices for sonic triangulation of electronic device position.

FIG. **27** represents a transmitter arrangement **2701** of antenna elements **2706** which may be coupled to dedicated Rx RFICs **2726**, according to an embodiment. Depending on

the location from which RF input signals may be received and information sent by receiver to be processed by communications component regarding determination of optimum times and locations for pocket-forming, which may enhance efficiency of wireless power transmission, micro-controller **2710** may select Tx RFICs and the arrangement of antenna elements **2706** to maximize the transmission operation of transmitter. Micro-controller **2710** may send switching control signals to Rx RFIC **2726** coupled to either antenna column **2706***b* or antenna row **2706***a* to include the antenna elements **2706** receiving RF input signals. After reception and processing of signals by Rx RFIC **2726**, the remaining antenna elements **2706** may be coupled to Tx RFICs using a plurality of configurations of antenna elements **2706** as a result of an interpolation step which may be performed by micro-controller **2710** to control operation of Tx RFICs using the ARM micro-processor in micro-controller **2710** to enhance wireless power transmission performance of transmitter, directing transmission of wireless power to the appropriate location.

Antenna elements **2706** to connected to Rx RFIC **2726** may reduce processing requirement and may increase control over pocket-forming, allowing multiple pocket-forming and a higher granular pocket-forming with less load over micro-controller **2710**, thus, a higher response of higher number of multiple pocket-forming may be allowed for transmission. Furthermore, multiple pocket-forming may charge a higher number of receivers and may allow a better trajectory to such receivers to provide a less expensive embodiment.

FIG. **28** illustrates a block diagram **2800** of Rx RFIC **2808** in an enhanced wireless power transmitter, according to an embodiment. RF input signals received by antenna elements **2806** dedicated for reception and operatively coupled to Rx RFIC **2808**, depending on the location from which they may be radiated to transmitter, enable micro-controller **2810**. RF input signal may then be subject to frequency sampling by an array of down-converters included in Rx RFIC **2808** in which the range of frequencies of RF input signals of about 2.4 GHz or about 5.6 GHz may be shifted into RF signals of a new frequency range.

Down-converters **2876** may include a local oscillator (not shown) providing a signal of pre-determined frequency to mix with the RF input signals creating a sum heterodyne and a difference heterodyne from which one of the heterodyne may be filtered to provide the desired output frequency. In present embodiment a signal of about 5.8 GHz may be down-converted to an output signal of about 5.0 GHz. Output signal of 5.0 GHz from down-converters **2876** may then be fed to addressing lines (A**20**) **2878** at 10 MHz for processing by micro-controller **2810**. Enhanced wireless power transmitter may be receiving at one frequency, for example 2.4 GHz, and transmitting at a higher frequency, for example 5.7 GHz.

Micro-controller **2810** may be enabled to send control signals of about 1 msec or about 100 μsec to Rx RFIC **2808** and depending on how fast the RF input signals may being received, control may be enabled every msec or about 10 times/sec for 1 msec. If RF input signals may be constantly received, for example every 10 μsec, updating may be implemented to about 1,000 times/sec.

In micro-controller **2810**, the proprietary algorithm may enable sampling of the incoming signals from each A**20** **2878** and may use an ARM micro-processor (not shown) to drive the required Tx RFICs coupled to the determined set/configuration of antenna elements **2806** to transmit wireless power to the appropriate location of receiver. The use of an ARM micro-processor may reduce cost, heat and power use, as it may be desirable for electronic devices to be powered or charged using wireless power transmission. The instruction set architecture of the ARM micro-processor may allow higher processing power and energy efficiency for micro-controller **2810**.

8. Multiple Transmitters Configuration

FIG. **29** depicts a block diagram of a wireless power system **2900**, which may include a plurality of wireless power transmitter **2901** connected to a single base station **2980**. transmitters **2901** may include one or more antenna elements **2906**, one or more radio frequency integrated circuit (RFIC) **2908**, a communication component **2912** and a housing **2974**, which may allocate all the components previously mentioned. Base station **2980** may include one or more microcontroller **2910**, a power source **2914** and a housing **2974** which may allocate all the components previously mentioned. Components in wireless power system **2900** and base station—may be manufactured using meta-materials, micro-printing of circuits, nano-materials, and the like.

Base station **2980** may be located in variety of locations where transmitters **2910** may stay connected to it. Such connection may include a variety of connections, which may include coaxial cable, phone cable, LAN cable, wireless connection among others. The connection between base station **2980** and transmitters **2910** aims to establish a link between RFIC **2908** and microcontroller **2910**, as well as the power source **2914** connection.

Microcontroller **2910** may control a variety of features of RFIC **2908** such as, time emission of pocket-forming, direction of. the pocket-forming, bounce angle, power intensity and the like. Furthermore, microcontroller **2910** may control multiple pocket-forming over multiple receivers or over a single receiver. In addition, microcontroller **2910** may manage and control communication protocols and signals by controlling communication component **2912**. Protocol may refer to a method and of translating between low level information data, such as binary bits or bytes, and higher level information data, such as numerical digits, alphanumeric characters, letters, punctuation, numerals, or characters in ASCII table. A protocol may also have an expected format or pattern of information data across time. Thus microcontroller **2910** may drive the foregoing features in several transmitters **2901** at the same time.

Base station **2980** may be fed by a power source **2914** which in turn may feed to transmitters **2901**. Power source **2914** may include AC or DC power supply. Voltage, power and current intensity provided by power source **2914** may vary in dependency with the required power to be transmitted. Conversion of power to radio signal may be managed by microcontroller **2910** and carried out by RFIC **2908**, which may utilize a plurality of methods and components to produce radio signals in a wide variety of frequencies, wavelength, intensities and other features.

As an exemplary use of a variety of methods and components for radio signal generation, oscillators and piezo-electric crystals may be used to create and change radio frequencies in different antenna elements **2906**. In addition, a variety of filters may be used for smoothing signals as well as amplifiers for increasing power to be transmitted. In some implementations, the wireless charging techniques of the present invention are not, however, limited to RF transmission techniques and include additional techniques for transmitting energy to a receiving device, wherein the receiving device converts the transmitted energy to electrical power. Exemplary forms of energy that can be converted by a

receiving device into electrical power include ultrasound, microwave, resonant and inductive magnetic fields, laser light or other forms of electromagnetic energy. In the case of ultrasound, for example, one or more transducer elements may be disposed so as to form a transducer array that transmits ultrasound waves toward a receiving device that receives the ultrasound waves and converts them to electrical power. In the case of resonant or inductive magnetic fields, magnetic fields are created in a transmitter coil and converted by a receiver coil into electrical power. Furthermore, RFIC **2908**, microcontroller **2910**, communication component **2914** and the rest of electronic components may be built in solid state circuits for increasing reliability in wireless power system **2900**. Others techniques for increasing reliability of electronic components may be used.

FIG. **30** depicts a wireless power system **3000**, which may include two transmitters **3001**, a base station **3080** and connections **3082**. Base station **3080** may enable operation of different transmitters **3001** in different rooms or area coverage. Each transmitter **3001** may operate at different frequencies, power intensities and different ranges. In addition, each transmitter **3001** may provide power to a plurality of receivers. Furthermore, base station **3080** may enable a single operation of all transmitter **3001**, thus may provide a higher capability for wireless charging by the use of each transmitter **3001** as a single one.

FIG. **31** depicts a wireless power system **3100**, which may include two transmitters **3101**, a base station **3180** and connections **3182**. Base station **3180** may enable operation of different transmitters **3101** in different rooms or area coverage. Each transmitter **3101** may operate at different frequencies, power intensities and different ranges. In addition, each transmitter **3101** may provide power to a plurality of receivers. Furthermore, base station **3180** may enable a single operation of all transmitter **3101**, thus may provide a higher capability for wireless charging by the use of each transmitter **3101** as single one. In addition, transmitters **3101** may be plugged into light sockets **3184**. Such light sockets **3184** may increase the places where transmitters **3101** may be installed.

III. Receivers—Systems and Methods for Receiving and Utilizing Wireless Power Transmissions

A. Components of Receiver Devices

Returning to FIG. **11**, which illustrates a diagram of a system **1100** architecture for wirelessly charging client devices, according to an exemplary embodiment, the system **1100** may comprise transmitter **1101** and receivers **1120** that may each comprise an application-specific integrated circuit (ASIC). The ASIC of the receivers **1120** may include a printed circuit board **1122**, an antenna element **1124**, a rectifier **1126**, a power converter **1129**, a communications component **1130**, and/or a power management integrated circuit (PMIC) **1132**. Receivers **1120** may also comprise a housing that may allocate all the requested components. The various components of receivers **1120** may comprise, or may be manufactured using, meta-materials, micro-printing of circuits, nano-materials, and the like.

1. Antenna Elements

Antenna elements **1124** may include suitable antenna types for operating in frequency bands similar to the bands described for antenna elements **1106** of a transmitter **1101**. Antenna element **1124** may include vertical or horizontal polarization, right hand or left hand polarization, elliptical polarization, or other suitable polarizations as well as suitable polarization combinations. Using multiple polarizations can be beneficial in devices where there may not be a preferred orientation during usage or whose orientation may vary continuously through time, for example a smartphone or portable gaming system. On the contrary, for devices with well-defined orientations, for example a two-handed video game controller, there might be a preferred polarization for antennas, which may dictate a ratio for the number of antennas of a given polarization. Suitable antenna types may include patch antennas with heights from about 118 inch to about 6 inches and widths from about ⅛ inch to about 6 inches. Patch antennas may have the advantage that polarization may depend on connectivity, i.e., depending on which side the patch is fed, the polarization may change. This may further prove advantageous as a receiver, such as receiver **1120**, may dynamically modify its antenna polarization to optimize wireless power transmission. Different antenna, rectifier, or power converter arrangements are possible for a receiver, as is described in the embodiments herein.

2. Rectifiers

A rectifier **1126** may convert alternating current (AC), which periodically reverses direction, to direct current (DC), which takes non-negative values. Because of the alternating nature of the input AC sine wave, the process of rectification alone produces a DC current that, though non-negative, consists of pulses of current. The output of the rectifier may be smoothed by an electronic filter to produce a steady current. The rectifier **1126** may include diodes and/or resistors, inductors and/or capacitors to rectify the alternating current (AC) voltage generated by antenna element **1124** to direct current (DC) voltage.

In some implementations, the rectifier **1126** may be a full-wave rectifier. A full-wave rectifier may convert the whole of the input waveform to one of constant polarity (positive or negative) at its output. Full-wave rectification may convert both polarities of the input waveform to pulsating DC (direct current), and yield a higher average output voltage. Two diodes and a center tapped transformer and/or four diodes in a bridge configuration and any AC source (including a transformer without center tap) may be utilized for a full-wave rectifier. For single-phase AC, if the transformer is center-tapped, then two diodes back-to-back (cathode-to-cathode or anode-to-anode, depending upon output polarity required) may be utilized to form a full-wave rectifier. Twice as many turns may be required on the transformer secondary to obtain the same output voltage than for a bridge rectifier, but the power rating is unchanged. Rectifier **1126** may be placed as close as is technically possible to antenna element **1124** to minimize losses. After rectifying AC voltage, DC voltage may be regulated using power converter **1129**.

3. Power Converters

Power converter **1129** can be a DC-to-DC converter that may help provide a constant voltage output and/or to help boost the voltage to the receiver **1120**. In some implementations, the DC-to-DC converter may be a maximum power point tracker (MPPT). A MPPT is an electronic DC-to-DC converter that converts a higher voltage DC output down to the lower voltage needed to charge batteries. Typical voltage outputs can be from about 5 volts to about 10 volts. In some embodiments, power converter **1129** may include electronic switched mode DC-to-DC converters, which can provide high efficiency. In such a case, a capacitor may be included before power converter **1129** to ensure sufficient current is provided for the switching device to operate. When charging an electronic device, for example a phone or laptop computer, initial high-currents that can exceed the level needed to activate operation of an electronic switched mode DC-to-DC converter, may be required. In such a case, a capacitor

may be added at the output of receiver **1120** to provide the extra energy required. Afterwards, lower power can be provided, as required to provide the appropriate amount electric current; for example, 1/80 of the total initial power used while having the phone or laptop still building-up charge.

In one embodiment, multiple rectifiers **1126** can be connected in parallel to antenna element **1124**. For example, four rectifiers **1126** may be connected in parallel to antenna element **1124**. However, several more rectifiers **1126** can be used. This arrangement may be advantageous because each rectifier **1126** may only need to handle ¼ of the total power. If one watt is to be delivered to an electronic device, then each rectifier **1126** may only need to handle a quarter of a watt. The arrangement may greatly diminish cost because using a plurality of low-power rectifiers **1126** can be cheaper than utilizing one high-power rectifier **1126** while handling the same amount of power. In some embodiments, the total power handled by rectifier **1126** can be combined into a power converter **1129**. In other embodiments, there may a power converter **1129** per each rectifier **1126**.

In other embodiments, multiple antenna elements **1124** may be connected in parallel to a rectifier **1126**, after which DC voltage may be regulated through a power converter **1129**. In this example, four antenna elements **1124** may be connected in parallel to a single rectifier **1126**. This arrangement may be advantageous because each antenna element **1124** may only handle ¼ of the total power. In addition, the arrangement may enable usage of antenna element **1124** of different polarizations with a single rectifier **1126** because signals may not cancel each other. Because of the foregoing property, the arrangement may be suitable for electronic client devices with an orientation that is not well-defined or otherwise varies over time. Lastly, the arrangement may be beneficial when using antenna element **1124** of equal polarization and configured for phases that do not differ greatly. In some embodiments, however, there can be a rectifier **1126** per antenna element **1124** and/or multiple rectifiers **1126** per antenna element **1124**.

In an exemplary implementation, an arrangement where multiple antenna elements **1124** outputs can be combined and connected to parallel rectifiers **1126** whose output may further be combined in one power converter **1129** may be implemented. There may be 16 antenna elements **1124** whose output may be combined at four parallel rectifiers **1126**. In other embodiments, antenna elements **1124** may be subdivided in groups (of four for example) and may connect to independent rectifiers **1126**.

In yet another embodiment, an arrangement where groups of antenna elements **1124** may be connected to different rectifiers **1126** which may in turn also be connected to different power converters **1129** may be implemented. In this embodiment, four groups of antenna elements **1124** (each containing four antenna elements **1124** in parallel) may each connect independently to four rectifiers **1126**. In this embodiment, the output of each rectifier **1126** may connect directly to a power converter **1129** (four in total). In other embodiments, the output of all four rectifiers **1126** can be combined before each power converter **1129** to handle the total power in parallel. In some embodiments, the combined outputs of each rectifier **1126** may connect to a single power converter **1129**. This arrangement may be beneficial in that it allows great proximity between rectifier **1126** and antenna element **1124**. This property may be desirable as it may keep losses at a minimum.

4. Communications Component

A communications component **1130**, similar to that of transmitter **1101**, may be included in receiver **1120** to communicate with a transmitter or to other electronic equipment. In some implementations, receiver **1120** can use a built-in communications component of the device (for example, Bluetooth) for communicating to a given transmitter **1120** based on requirements provided by processor such as battery level, user predefined charging profile or others transmitters **1101** may include one or more printed circuit boards (PCB) **1104**, one or more antenna elements **1106**, one or more radio frequency integrated circuits (RFIC) **1108**, one or more microcontrollers (MCs) **1110**, a communication component **1112**, and a power source **1114**. The transmitter **1101** may be encased in a housing, which may allocate all the requested components for transmitter **1101**. Components in transmitter **1101** may be manufactured using meta-materials, micro-printing of circuits, nano-materials, and/or any other materials. The types of information communicated by the communications components between the receiver and the transmitter include but not limited to the present power levels in the batteries, signal strength and power level being received at the receiver, timing information, phase and gain information, user identification, client device privileges, security related signaling, emergency signaling, and authentication exchanges, among other things.

5. PMICs

A power management integrated circuit (PMIC) **1132** is an integrated circuit and/or a system block in a system-on-a-chip device for managing power requirements of the host system. The PMIC **1132** may include battery management, voltage regulation, and charging functions. It may include a DC-to-DC converter to allow dynamic voltage scaling. In some implementations, the PMIC **1132** may provide up to a 95% power conversion efficiency. In some implementations, the PMIC **1132** may integrate with dynamic frequency scaling in a combination. The PMIC **1132** may be implemented in a battery-operated device such as mobile phones and/or portable media players. In some implementations, the battery may be replaced with an input capacitor and an output capacitor. The PMIC **1132** may be directly connected to the battery and/or capacitors. When the battery is being charged directly, a capacitor may not be implemented. In some implementations, the PMIC **1132** may be coiled around the battery. The PMIC **1132** may comprise a power management chip (PMC) that acts as a battery charger, and is connected to the battery. The PMIC **1132** can use pulse-frequency modulation (PFM) and pulse-width modulation (PWM). It can use switching amplifier (Class-D electronic amplifier). In some implementations, an output converter, a rectifier, and/or a BLE may also be included in the PMIC **1132**.

6. Housing

Housing can be made of any suitable material that may allow for signal or wave transmission and/or reception, for example plastic or hard rubber. Housing may be an external hardware that may be added to different electronic equipment, for example in the form of cases, or can be embedded within electronic equipment as well.

7. Network

The network **1140** may comprise any common communication architecture that facilitates communication between transmitter **1101** and the receiver **1120**. One having ordinary skill in the art would appreciate that the network **1140** may be the Internet, a private intranet, or some hybrid of the two. It should also be obvious to one skilled in the art that the

network components may be implemented in dedicated processing equipment, or alternatively in a cloud processing network.

A. Configurations for Receivers, Receiver Components, and Systems Related to Receivers

1. Multiple Rectifiers Connected in Parallel to an Antenna Element

FIG. **18**A illustrates an arrangement **1800**A where multiple rectifiers **1826**A can be connected in parallel to an antenna element **1824**A. In this example, four rectifiers **1826**A may be connected in parallel to an antenna elements **1824**A. However, several more rectifiers **1826**A may be used. Arrangement **1800**A may be advantageous because each rectifier **1826**A may only need to handle ¼ of the total power. If one watt is to be delivered to an electronic device, then each rectifier **1826**F may only need to handle a quarter of a watt. Arrangement **1800**A may greatly diminish cost because using a plurality of low-power rectifiers **1826**A can be cheaper than utilizing one high-power rectifier **1826**A while handling the same amount of power. In some embodiments, the total power handled by rectifier **1826**A can be combined into one DC-DC converter **1828**A. In other embodiments, there may a DC-DC converter **1828**A per rectifier **1826**A.

2. Multiple Antenna Elements Connected in Parallel to a Rectifier

FIG. **18**B illustrates an arrangement **1800**B where multiple antenna elements **1824**B may be connected in parallel to a rectifier **1826**B, after which DC voltage may be regulated through a DC-DC converter **1828**B. In this example, four antenna elements **1824**B may be connected in parallel to a single rectifier **1826**B. Arrangement **1800**B may be advantageous because each antenna element **1824**B may only handle ¼ of the total power. In addition, arrangement **1800**B may enable usage of antenna element **1824**B of different polarizations with a single rectifier **1826**B because signals may not cancel each other. Because of the foregoing property, arrangement **1800**B may be suitable for electronic devices with an orientation that is not well-defined or otherwise varies over time. Lastly, arrangement **1800**B may be beneficial when using antenna element **1824**B of equal polarization and configured for phases that do not differ greatly. In some embodiments, however, there can be a rectifier **1826**B per antenna element **1824**B or multiple rectifiers **1826**B (as described in FIG. **18**A) per antenna element **1824**B.

3. Multiple Antenna Elements Connected in Parallel to Multiple Rectifiers

FIG. **19**A illustrates an arrangement **1900**A where multiple antenna elements **1924**A outputs can be combined and connected to parallel rectifier **1926**A whose output may further be combined in one DC converter **1928**A. Arrangement **1900**A shows, by way of exemplification, 16 antenna elements **1924**A whose output may be combined at four parallel rectifiers **1926**A. In other embodiments, antenna elements **1924**A may be subdivided in groups (e.g., four groups) and may connect to independent rectifiers as shown in FIG. **19**B below.

4. Permutations of Groupings

FIG. **19**B illustrates an arrangement **1900**B where groups of antenna elements **1624**B may be connected to different rectifiers **1926**B, which may in turn also be connected to different DC converters **1928**B. In arrangement **1900**B, four groups of antenna elements **1924**B (each containing four antenna elements **1924**B in parallel) may each connect independently to four rectifiers **1926**B. In this embodiment, the output of each rectifiers **1926**B may connect directly to a DC converter **1928**B (four in total). In other embodiments, the output of all four rectifiers **1926**B can be combined, before each DC converter **1928**B, to handle the total power in parallel. In other embodiments, the combined outputs of each rectifier **1926**B may connect to a single DC converter **1928**B. Arrangement **1900**B may be beneficial in that it allows great proximity between rectifier **1926**B and antenna element **1924**B. This property may be desirable as it may keep losses at a minimum.

A receiver may be implemented on, connected to or embedded in electronic devices or equipment that may rely on power for performing its intended functions, for example a phone, laptop computer, a television remote, a children's toys or any other such devices. A receiver utilizing pocket-forming can be used to fully charge a device's battery while being "On" or "Off," or while being used or not. In addition, battery lifetime can be greatly enhanced. For example, a device operating on two watts utilizing a receiver that may deliver one watt may increase its battery duration up to about 50%. Lastly, some devices currently running on batteries can fully be powered using a receiver after which a battery may no longer be required. This last property may be beneficial for devices where replacing batteries can be tedious or hard to accomplish such as in wall-clocks. Embodiments below provide some examples of how integration of receivers may be carried out on electronic devices.

5. Enhanced Wireless Power Receiver Configuration

FIG. **33** shows a block diagram of receiver **3320** which can be used for wireless powering or charging one or more electronic devices. According to some aspects of this embodiment, receiver **3320** may operate with the variable power source generated from transmitted RF waves to deliver constant and stable power or energy to electronic device. In addition, receiver **3320** may use the variable power source generated from RF waves to power up electronic components within receiver **3320** for proper operation.

Receiver **3320** may be integrated in electronic device and may include a housing that can be made of any suitable material to allow for signal or wave transmission and/or reception, for example plastic or hard rubber. This housing may be an external hardware that may be added to different electronic equipment, for example in the form of cases, or can be embedded within electronic equipment as well.

Receiver **3320** may include an antenna array **3386** which may convert RF waves or pockets of energy into electrical power. Antenna array **3386** may include one or more antenna elements **3324** operatively coupled with one or more rectifiers **3326**. RF waves may exhibit a sinusoidal shape within a voltage amplitude and power range that may depend on characteristics of transmitter and the environment of transmission. The environment of transmission may be affected by changes to or movement of objects within the physical boundaries, or movement of the boundaries themselves. It may be also affected by changes to the medium of transmission; for example, changes to air temperature or humidity. As a result, the voltage or power generated by antenna array **3386** at receiver **3320** may be variable. As an illustrative embodiment, and not by way of limitation, the alternating current (AC) voltage or power generated by antenna element **3324** from transmitted RF waves or pocket of energy may vary from about 0 volts or 0 watts to about 5 volts at 3 watts.

Antenna element **3324** may include suitable antenna types for operating in frequency bands similar to the bands described for transmitter. Antenna element **3324** may include vertical or horizontal polarization, right hand or left

hand polarization, elliptical polarization, or other suitable polarizations as well as suitable polarization combinations. Using multiple polarizations can be beneficial in devices where there may not be a preferred orientation during usage or whose orientation may vary continuously through time, for example electronic device. On the contrary, for devices with well-defined orientations, for example a two-handed video game controller, there might be a preferred polarization for antennas which may dictate a ratio for the number of antennas of a given polarization. Suitable antenna types may include patch antennas with heights from about ⅛ inches to about 6 inches and widths from about ⅛ inches to about 6 inches. Patch antennas may have the advantage that polarization may depend on connectivity, i.e. depending on which side the patch is fed, the polarization may change. This may further prove advantageous as receiver **3320** may dynamically modify its antenna polarization to optimize wireless power transmission.

Rectifier **3326** may include diodes or resistors, inductors or capacitors to rectify the AC voltage generated by antenna element **3324** to direct current (DC) voltage. Rectifier **3326** may be placed as close as is technically possible to antenna element **3324** to minimize losses. In one embodiment, rectifier **3326** may operate in synchronous mode, in which case rectifier **3326** may include switching elements that may improve the efficiency of rectification. As an illustrative embodiment, and not by way of limitation, output of rectifier **3326** may vary from about 0 volts to about 5 volts.

An input boost converter can be included in receiver **3320** to convert the variable DC output voltage of rectifier **3326** into a more stable DC voltage that can be used by components of receiver **3320** and/or electronic device. Input boost converter **3258** may operate as a step-up DC-to-DC converter to increase the voltage from rectifier **3326** to a voltage level suitable for proper operation of receiver **3320**. As an illustrative embodiment, and not by way of limitation, input boost converter **3258** may operate with input voltages of at least 0.4 volts to about 5 volts to produce an output voltage of about 5 volts. In addition, input boost converter may reduce or eliminate rail-to-rail deviations. In one embodiment, input boost converter may exhibit a synchronous topology to increase power conversion efficiency.

As the voltage or power generated from RF waves may be zero at some instants of wireless power transmission, receiver **3320** can include a storage element **3352** to store energy or electric charge from the output voltage produced by input boost converter. In this way, storage element **3352**, through an output boost converter, may deliver continuous voltage or power to a load, where this load may represent the battery or internal circuitry of electronic device requiring continuous powering or charging. For example, load may be the battery of a mobile phone requiring constant delivery of 5 volts at 2.5 watts.

Storage element **3352** may include a battery **3392** to store power or electric charge from the power received from input boost converter **3258**. Battery **3392** may be of different types, including but not limited to, alkaline, nickel-cadmium (NiCd), nickel-metal hydride (NiHM), and lithium-ion, among others. Battery **3392** may exhibit shapes and dimensions suitable for fitting receiver **3320**, while charging capacity and cell design of battery **3392** may depend on load requirements. For example, for charging or powering a mobile phone, battery **3392** may deliver a voltage from about 3 volts to about 4.2 volts.

In another embodiment, storage element **3352** may include a capacitor instead of battery **3392** for storing and delivering electrical charge as required by the receiver. As a way of example, in the case of charging or powering a mobile phone, receiver **3320** may include a capacitor with operational parameters suitable for matching load requirements.

Receiver **3320** may also include output boost converter operatively coupled with storage element **3352** and input boost converter, where this output boost converter may be used for matching impedance and power requirements of load. As an illustrative embodiment, and not by way of limitation, output boost converter may increase the output voltage of battery **3392** from about 3 or 4.2 volts to about 5 volts which may be the voltage required by the battery or internal circuitry of electronic device. Similarly to input boost converter, output boost converter may be based on a synchronous topology for enhancing power conversion efficiency.

Storage element **3352** may provide power or voltage to a communication subsystem which may include a low-drop-out regulator (LDO), a microcontroller, and an electrically erasable programmable read-only memory (EEPROM). LDO may function as a DC linear voltage regulator to provide a steady voltage suitable for low energy applications as in microcontroller. Microcontroller may be operatively coupled with EEPROM to store data pertaining the operation and monitoring of receiver **3320**. Microcontroller may also include a clock (CLK) input and general purpose inputs/outputs (GPIOs).

In one embodiment, microcontroller in conjunction with EEPROM may run an algorithm for controlling the operation of input and output boost converters, according to load requirements. Microcontroller may actively monitor the overall operation of receiver **3320** by taking one or more power measurements **3388** (ADC) at different nodes. For example, microcontroller may measure how much voltage or power is being delivered at rectifier **3326**, input boost converter, battery **3392**, output boost converter, communication subsystem, and/or load. Microcontroller may communicate these power measurements **3388** to load so that electronic device may know how much power it can pull from receiver **3320**. In another embodiment, microcontroller, based on power measurements **3388**, may control the power or voltage delivered at load by adjusting the load current limits at output boost converter. Yet in another embodiment, a maximum power point tracking (MPPT) algorithm may be executed by microcontroller to control and optimize the amount of power that input boost converter can pull from antenna array **3386**.

In another embodiment, microcontroller may regulate how power or energy can be drained from storage element **3352** based on the monitoring of power measurements **3388**. For example, if the power or voltage at input boost converter runs too low, then microcontroller may direct output boost converter to drain battery **3392** for powering load.

Receiver **3320** may include a switch **3390** for resuming or interrupting power being delivered at load. In one embodiment, microcontroller may control the operation of switch **3390** according to terms of services contracted by one or more users of wireless power transmission or according to administrator policies.

FIG. **34** shows a power conversion process **3400** that may be implemented in receiver during wireless power transmission. According to some aspects of this embodiment, power conversion process **3400** may allow power extraction from RF waves and/or pockets of energy—to provide suitable voltage or power to internal components of receiver **108** and electronic device.

Power conversion process **3400** may start when antenna element **3324** may convert RF waves and/or pockets of energy into AC voltage or power. At step **3451**, rectifier may rectify this AC voltage or power into DC voltage or power. At this stage, the DC voltage or power generated at rectifier may be variable depending on conditions for extracting power from RF waves and/or pockets of energy. Subsequently at step **3453**, input boost converter may step up the DC voltage or power obtained from rectifier to a voltage or power level that may be used by storage element or other internal components of receiver. In one embodiment, input boost converter may receive an input (based on a MPPT algorithm) from microcontroller for adjusting and optimizing the amount of power that can be pulled from antenna array. At this stage, the stabilized and increased voltage at input boost converter may be directly utilized by load, but it may not be continuous at all times given the inherently characteristics of RF waves.

The stabilized DC voltage produced by input boost converter may be used to charge storage element, where storage element may be in the form of a battery or a capacitor, at step **3455**. Storage element may maintain suitable charging levels at all times for delivering continuous power to load. In addition, storage element may provide suitable power or voltage to communication subsystem.

The voltage or power generated by storage element can be step up by output boost converter to match impedance and power requirements of load, at step **3457**. In one embodiment, microcontroller may set up current limits at output boost converter to adjust the amount of power being delivered at load according to the application.

After the second boost conversion, output boost converter may now supply stable and continuous power or voltage to load within suitable electrical specifications for charging or powering electronic device which may be operatively coupled with receiver, at step **3459**.

Microcontroller may control switch to interrupt or resume the delivery of power or voltage at load according to terms of services contracted by users of wireless power transmission. For example, if wireless power transmission is a service provided to a user of receiver, then microcontroller, through the use of switch, can interrupt or resume the powering or charging of electronic device according to the status of user's contract. Furthermore, microcontroller may regulate the operation of switch based on charging or powering priorities established for one or more electronic devices. For example, microcontroller may open switch if the electronic device coupled with receiver has a lower powering or charging priority compared to another electronic device coupled with a suitable receiver that may require charging and that may have a higher priority for charging. In this case, transmitter may direct RF waves towards the receiver coupled with the electronic device with higher charging or powering priority.

6. Embedded Receiver

FIG. **20**A illustrates an implementation scheme where a device **2000**A that may represent a typical phone, computer or other electronic device may include an embedded receiver **2020**A. Device **2000**A may also include a power source, a communications component **2030**A, and a processor. Receiver **2020**A way utilize pocket-forming for providing power to power source from device **2000**A. In addition, receiver **2020**A can use built-in communications component **2030**A of device **2000**A (for example, Bluetooth) for communicating to a given transmitter based on requirements provided by processor such as battery level, user predefined charging profile or others.

7. Battery with an Embedded Receiver

FIG. **20**B illustrates another implementation scheme where a device **2000**B may include a battery with an embedded receiver **2020**B. Battery may receive power wirelessly through pocket-forming and may charge through its embedded receiver **2020**B. Battery may function as a supply for power source, or may function as back-up supply. This configuration may be advantageous in that battery may not need to be removed for charging. This may particularly be helpful in gaming controllers, or gaming devices where batteries, typically AA or AAA may be continuously replaced.

8. External Communication Component

FIG. **20**C illustrates an alternate implementation scheme **2000**C where receiver **2020**C and a communications component **2030**C may be included in an external hardware that may be attached to a device. Hardware can take appropriate forms such as cases that may be placed on phones, computers, remote controllers and others, which may connect thorough suitable interfaces such as Universal Serial Bus (USB). In other embodiments, hardware may be printed on flexible films, which may then be pasted or otherwise attached to electronic equipment. This option may be advantageous as it may be produced at low cost and can easily be integrated into various devices. As in previous embodiments, a communications component **2030**C may be included in hardware that may provide communication to a transmitter or to electronic equipment in general.

9. Casing or Housing of Receiver Connecting to USB

FIG. **21**A illustrates hardware in the form of case including a receiver **2102**A that may connect through flex cables or USB to a smartphone and/or any other electronic device. In other embodiments, the housing or case can be a computer case, phone case, and/or camera case among other such options.

10. PCB on Printed Film

FIG. **21**B illustrates hardware in the form of a printed film or flexible printed circuit board (PCB) which may include a plurality of printed receivers **2102**B. Printed film can be pasted or otherwise attached to electronic devices and can connect trough suitable interfaces such as USB. Printed film may be advantageous in that sections can be cut from it to meet specific electronic device sizes and/or requirements. The efficiency of wireless power transmission as well as the amount of power that can be delivered (using pocket-forming) may be a function of the total number of antenna elements used in a given receiver and transmitter system. For example, for delivering about one watt at about 15 feet, a receiver may include about 80 antenna elements while a transmitter may include about 256 antenna elements. Another identical wireless power transmission system (about 1 watt, at about 15 feet) may include a receiver with about 40 antenna elements, and a transmitter with about 512 antenna elements. Reducing in half the number of antenna elements in a receiver may require doubling the number of antenna elements in a transmitter. In some cases, it may be cost-effective to put a greater number of antenna elements in a transmitter than in a receiver. However, the opposite can be achieved (placing more antenna elements on a receiver than on a transmitter), as long as there are at least two antenna elements in a transmitter.

II. Antenna Hardware and Functionality

A. Spacing Configuration

FIG. **22** illustrates internal hardware, where receiver **2220** may be used for receiving wireless power transmission in an electronic device **2252** (e.g., smartphone). In some implementations, the electronic device **2252** may include receiver

2220, which may be embedded around the internal edge of the case 2254 (e.g., smartphone case) of the electronic device 2252. In other embodiments, the receiver 2220 may be implemented covering the back side of the case 2254. The case 2254 may be one or more of: a smartphone cover, a laptop cover, camera cover, GPS cover, a game controller cover and/or tablet cover, among other such options. The case 2254 may be made out of plastic, rubber and/or any other suitable material.

Receiver 2220 may include an array of antenna elements 2224 strategically distributed on the grid area shown in FIG. 22. The case 2254 may include an array of antenna elements 2224 located around the edges and/or along the backside of case 2254 for optimal reception. The number, spacing, and type of antenna elements 2224 may be calculated according to the design, size, and/or type of electronic device 2252. In some embodiments, there may be a spacing (e.g., 1 mm-4 mm) and/or a meta-material between the case 2254 containing the antenna element 2224 and the electronic device 2252. The spacing and/or meta-material may provide additional gain for RF signals. In some implementations, the meta-materials may be used in creating a multi-layer PCB to implement into the case 2254.

B. Metamaterial

The internal hardware may be in the form of a printed film 2256 and/or flexible PCB may include different components, such as a plurality of printed antenna elements 2224 (connected with each other in serial, parallel, or combined), rectifier, and power converter elements. Printed film 2256 may be pasted or otherwise attached to any suitable electronic devices, such as electronic device 2252 and/or tablets. Printed film 2256 may be connected through any suitable interfaces such as flexible cables 2258. Printed film 2256 may exhibit some benefits; one of those benefits may be that sections can be cut from it to meet specific smart mobile device sizes and/or requirements. According to one embodiment, the spacing between antenna elements 2224 for receiver 2220 may range from about 2 nm to about 12 nm, being most suitable about 7 nm. Additionally, in some implementations, the optimal amount of antenna elements 2224 that may be used in receiver 2220 for an electronic device 2252 such as a smartphone may range from about 20 to about 30. However, the amount of antenna elements 2224 within receiver 2220 may vary according to electronic device 2252 design and size. Antenna element 2224 may be made of different conductive materials such as cooper, gold, and silver, among others. Furthermore, antenna element 2224 may be printed, etched, or laminated onto any suitable non-conductive flexible substrate, such as flexible PCB, among others. The disclosed configuration and orientation of antenna element 2224 may exhibit a better reception, efficiency, and performance of wireless charging.

C. Internal Hardware

FIG. 32 illustrates internal hardware 3200, where receiver 3220 may be used for wireless power transmission in smartphones 3252. FIG. 32 shows a first embodiment where smartphone 3252 may include receiver 3220 embedded around the internal edge of smartphone 3252's case. Receiver 3220 may include an array of antenna elements 3224 strategically distributed on the grid area. Receiver may refer to a device including at least one antenna element, at least one rectifying circuit and at least one power converter, which may utilize pockets of energy for powering, or charging a client device.

The number and type of antenna elements 3224 may be calculated according to smartphone 3252's design. When charging an electronic device, for example a phone (smartphone) or laptop computer, initial high currents which can exceed the minimum voltage needed to activate the operation of an electronic switched mode DC-DC converter may be required. In such a case, a capacitor (not shown) may be added at the output of receiver 3220 to provide the extra energy required. Afterwards, lower power can be provided, for example 1/80 of the total initial power while having the phone or laptop still build-up charge. Charge may refer to the conversion of RF energy into electrical energy by a receiver, using an antenna, where the electrical energy may be transmitted through an electrical circuit connection from the receiver to an electrically connected client device, where the transmitted energy may be used by the device to charge its battery, to power its functions, and/or any combination. Client device may refer to any device that is to receive wireless power, through an electrical connection with a wireless power receiver, from a wireless transmitter, in a wireless power transmission system. The client device may be a computer, a laptop computer, a mobile electronic device such as a smart phone, an electronic toy, a remote control for a television or other consumer device, or any electronic device or electrical device to be powered wirelessly.

Lastly, communications component, may be included in receiver 3220 to communicate with transmitter or to other electronic equipment. Transmitter may refer to a device, including a chip which may generate two or more RF signals, at least one RF signal being phase shifted and gain adjusted with respect to other RF signals, substantially all of which pass through one or more RF antenna such that focused RF signals are directed to a target.

Different antenna, rectifier or power converter arrangements are possible for a receiver as will be explained in following embodiments. Particularly, internal hardware 3200 in the form of a printed film 3256 or flexible printed circuit board (PCB) may include different components, such as a plurality of printed antenna elements 3224 (connected with each other in serial, parallel, or combined), rectifier 206, and power converter 3229 elements. Printed film 3256 may be pasted or otherwise attached to any electronic devices, such as smartphones 3252 or tablets and may be connected through any interfaces such as flexible cables. Printed film 3256 may exhibit some benefits, one of those benefits may be that sections can be cut from it to meet specific smart mobile device sizes and/or requirements.

According to one embodiment, the spacing between antenna elements 3224 for receivers 3220 may range from about 5 nm to about 12 nm. However, the amount of antennas within receivers 3220 may vary according to smartphone 3252's design and size. Antenna elements 3224 may be made of different conductive materials such as cooper, gold, and silver, among others. Furthermore, antenna elements 3224 may be printed, etched, or laminated onto any non-conductive flexible substrate, such as flexible printed circuit board (PCB), among others. The disclosed configuration and orientation of antenna elements 3224 may exhibit a better reception, efficiency, and performance of wireless charging.

The foregoing method descriptions and the process flow diagrams are provided merely as illustrative examples and are not intended to require or imply that the steps of the various embodiments must be performed in the order presented. As will be appreciated by one of skill in the art the steps in the foregoing embodiments may be performed in any order. Words such as "then," "next," and the like, are not intended to limit the order of the steps; these words are simply used to guide the reader through the description of the methods. Although process flow diagrams may describe

the operations as a sequential process, many of the operations can be performed in parallel or concurrently. In addition, the order of the operations may be re-arranged. A process may correspond to a method, a function, a procedure, a subroutine, a subprogram, etc. When a process corresponds to a function, its termination may correspond to a return of the function to the calling function or the main function.

The various illustrative logical blocks, modules, circuits, and algorithm steps described in connection with the embodiments disclosed herein may be implemented as electronic hardware, computer software, or combinations of both. To clearly illustrate this interchangeability of hardware and software, various illustrative components, blocks, modules, circuits, and steps have been described above generally in terms of their functionality. Whether such functionality is implemented as hardware or software depends upon the particular application and design constraints imposed on the overall system. Skilled artisans may implement the described functionality in varying ways for each particular application, but such implementation decisions should not be interpreted as causing a departure from the scope of the present invention.

Embodiments implemented in computer software may be implemented in software, firmware, middleware, microcode, hardware description languages, or any combination thereof. A code segment or machine-executable instructions may represent a procedure, a function, a subprogram, a program, a routine, a subroutine, a module, a software package, a class, or any combination of instructions, data structures, or program statements. A code segment may be coupled to another code segment or a hardware circuit by passing and/or receiving information, data, arguments, parameters, or memory contents. Information, arguments, parameters, data, etc. may be passed, forwarded, or transmitted via any suitable means including memory sharing, message passing, token passing, network transmission, etc.

The actual software code or specialized control hardware used to implement these systems and methods is not limiting of the invention. Thus, the operation and behavior of the systems and methods were described without reference to the specific software code being understood that software and control hardware can be designed to implement the systems and methods based on the description herein.

When implemented in software, the functions may be stored as one or more instructions or code on a non-transitory computer-readable or processor-readable storage medium. The steps of a method or algorithm disclosed herein may be embodied in a processor-executable software module that may reside on a computer-readable or processor-readable storage medium. A non-transitory computer-readable or processor-readable media includes both computer storage media and tangible storage media that facilitate transfer of a computer program from one place to another. A non-transitory processor-readable storage media may be any available media that may be accessed by a computer. By way of example, and not limitation, such non-transitory processor-readable media may comprise RAM, ROM, EEPROM, CD-ROM or other optical disk storage, magnetic disk storage or other magnetic storage devices, or any other tangible storage medium that may be used to store desired program code in the form of instructions or data structures and that may be accessed by a computer or processor. Disk and disc, as used herein, include compact disc (CD), laser disc, optical disc, digital versatile disc (DVD), floppy disk, and Blu-ray disc where disks usually reproduce data magnetically, while discs reproduce data optically with lasers. Combinations of the above should also be included within the scope of computer-readable media. Additionally, the operations of a method or algorithm may reside as one or any combination or set of codes and/or instructions on a non-transitory processor-readable medium and/or computer-readable medium, which may be incorporated into a computer program product.

The preceding description of the disclosed embodiments is provided to enable any person skilled in the art to make or use the present invention. Various modifications to these embodiments will be readily apparent to those skilled in the art, and the generic principles defined herein may be applied to other embodiments without departing from the spirit or scope of the invention. Thus, the present invention is not intended to be limited to the embodiments shown herein but is to be accorded the widest scope consistent with the following claims and the principles and novel features disclosed herein.

While various aspects and embodiments have been disclosed, other aspects and embodiments are contemplated. The various aspects and embodiments disclosed are for purposes of illustration and are not intended to be limiting, with the true scope and spirit being indicated by the following claims.

What is claimed is:

1. A method for controlling wireless transmission of power in accordance with safety restrictions, comprising:

receiving, via an application executing on an electronic device that is coupled to a wireless power receiver, user-selected safety restrictions used to determine when wirelessly delivered power may be transmitted to the wireless power receiver;

determining, using data provided by a sensor of the electronic device, whether any of the safety restrictions are present at the electronic device;

upon determining that the safety restrictions are not present at the electronic device, receiving radio frequency (RF) power waves that are sent to the electronic device by a wireless power transmitter, wherein the wireless power transmitter only transmits the RF power waves when the safety restrictions are not present at the electronic device; and

while receiving the RF power waves:

continuing to determine whether any of the safety restrictions are present at the electronic device; and

upon determining that at least one of the safety restrictions is present at the electronic device, ceasing to receive the RF power waves from the wireless power transmitter.

2. The method of claim **1**, wherein the safety restrictions include restrictions related to to one of (a) movement of the electronic device and (b) an orientation of the electronic device.

3. The method of claim **1**, wherein the safety restrictions include restrictions related to proximity of the electronic device to a user.

4. The method of claim **1**, wherein the safety restrictions include restrictions related to usage of the electronic by a user.

5. The method of claim **1**, wherein the safety restrictions include restrictions related to whether a peripheral device is connected to the electronic device.

6. The method of claim **1**, wherein the sensor of the electronic device is a sensor used to determine pitch, yaw, roll, or attitude of the electronic device.

7. An electronic device for receiving wireless power comprising:

at least one receiving antenna for receiving wireless power waves;

a sensor;

one or more processors configured to:

determine, using data provided by a sensor of the electronic device, whether any of the safety restrictions are present at the electronic device;

upon determining that the safety restrictions are not present at the electronic device, receive radio frequency (RF) power waves that are sent to the electronic device by a wireless power transmitter, wherein the wireless power transmitter only transmits the RF power waves when the safety restrictions are not present at the electronic device; and

while receiving the RF power waves:

continue to determine whether any of the safety restrictions are present at the electronic device; and

upon determining that at least one of the safety restrictions is present at the electronic device, cease to receive the RF power waves from the wireless power transmitter.

8. The electronic device of claim **7**, wherein the safety restrictions include restrictions related to one of (a) movement of the electronic device and (b) an orientation of the electronic device.

9. The electronic device of claim **7**, wherein the safety restrictions include restrictions related to proximity of the electronic device to a user.

10. The electronic device of claim **7**, wherein the safety restrictions include restrictions related to usage of the electronic device by a user.

11. The electronic device of claim **7**, wherein the safety restrictions include restrictions related to whether a peripheral device is connected to the electronic device.

12. The electronic device of claim **7**, wherein the sensor of the electronic device is a sensor used to determine pitch, yaw, roll, or attitude of the electronic device.

13. The method of claim **1**, wherein the electronic device comprises a wireless power receiver that includes at least one antenna for receiving the RF power waves.

* * * * *