US009949608B2

(12) **United States Patent**
Landry et al.

(10) **Patent No.: US 9,949,608 B2**
(45) **Date of Patent: Apr. 24, 2018**

(54) **NAVIGATIONAL CONTROL SYSTEM FOR A ROBOTIC DEVICE**

(71) Applicant: **iRobot Corporation**, Bedford, MA (US)

(72) Inventors: **Gregg W Landry**, Gloucester, MA (US); **David A. Cohen**, Brookline, MA (US); **Daniel N. Ozick**, Newton, MA (US); **Mark J. Chiappetta**, Chelmsford, MA (US); **Joseph L. Jones**, Acton, MA (US)

(73) Assignee: **iRobot Corporation**, Bedford, MA (US)

(*) Notice: Subject to any disclaimer, the term of this patent is extended or adjusted under 35 U.S.C. 154(b) by 558 days.

(21) Appl. No.: **14/291,682**

(22) Filed: **May 30, 2014**

(65) **Prior Publication Data**

US 2014/0289991 A1 Oct. 2, 2014

Related U.S. Application Data

(63) Continuation of application No. 13/781,314, filed on Feb. 28, 2013, now Pat. No. 8,781,626, which is a (Continued)

(51) **Int. Cl.**
A47L 11/33 (2006.01)
A47L 11/40 (2006.01)
(Continued)

(52) **U.S. Cl.**
CPC ..... ***A47L 11/4011*** (2013.01); ***G05D 1/0272*** (2013.01); ***G05D 3/12*** (2013.01); (Continued)

(58) **Field of Classification Search**
CPC A47L 2201/00–2201/06; G05D 2201/0203; G05D 2201/0208; G05D 2201/0215; B25J 9/0003
See application file for complete search history.

(56) **References Cited**

U.S. PATENT DOCUMENTS

1,755,054 A 4/1930 Darst
1,780,221 A 11/1930 Buchmann
(Continued)

FOREIGN PATENT DOCUMENTS

DE 2128842 C3 12/1980
DE 3317376 C2 12/1987
(Continued)

OTHER PUBLICATIONS

Andersen et al., "Landmark based navigation strategies," SPIE Conference on Mobile Robots XIII, SPIE vol. 3525, pp. 170-181, Jan. 8, 1999.
(Continued)

Primary Examiner — Spencer D Patton
(74) *Attorney, Agent, or Firm* — Fish & Richardson P.C.

(57) **ABSTRACT**

An autonomous cleaning apparatus includes a chassis, a drive system disposed on the chassis and operable to enable movement of the cleaning apparatus, and a controller in communication with the drive system. The controller includes a processor operable to control the drive system to steer movement of the cleaning apparatus. The autonomous cleaning apparatus includes a cleaning head system disposed on the chassis and a sensor system in communication with the controller. The sensor system includes a debris sensor for generating a debris signal, a bump sensor for generating a bump signal, and an obstacle following sensor disposed on a side of the autonomous cleaning apparatus for generating an obstacle signal. The processor executes a prioritized arbitration scheme to identify and implement one or more dominant behavioral modes based upon at least one signal received from the sensor system.

21 Claims, 18 Drawing Sheets

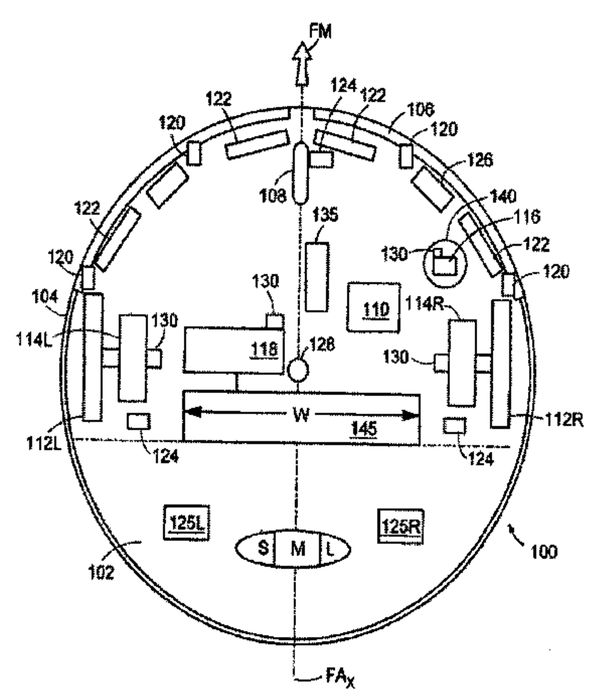

Related U.S. Application Data

continuation of application No. 12/610,792, filed on Nov. 2, 2009, now Pat. No. 8,428,778, which is a continuation of application No. 12/512,114, filed on Jul. 30, 2009, now Pat. No. 8,386,081, which is a continuation-in-part of application No. 11/682,642, filed on Mar. 6, 2007, now Pat. No. 9,128,486, which is a continuation of application No. 11/341,111, filed on Jan. 27, 2006, now Pat. No. 7,188,000, which is a continuation of application No. 10/661,835, filed on Sep. 12, 2003, now Pat. No. 7,024,278, said application No. 12/512,114 is a continuation-in-part of application No. 12/255,393, filed on Oct. 21, 2008, now Pat. No. 8,378,613, which is a continuation of application No. 11/860,272, filed on Sep. 24, 2007, now Pat. No. 7,459,871, which is a continuation of application No. 11/533,294, filed on Sep. 19, 2006, now Pat. No. 7,288,912, which is a continuation of application No. 11/109,832, filed on Apr. 19, 2005, now abandoned, and a continuation of application No. 10/766,303, filed on Jan. 28, 2004, now abandoned.

(60) Provisional application No. 60/410,480, filed on Sep. 13, 2002.

(51) **Int. Cl.**
G05D 1/02 (2006.01)
G05D 3/12 (2006.01)

(52) **U.S. Cl.**
CPC *A47L 2201/06* (2013.01); *G05D 1/0227* (2013.01); *G05D 1/0242* (2013.01); *G05D 2201/0215* (2013.01)

(56) **References Cited**

U.S. PATENT DOCUMENTS

1,970,302	A	8/1934	Gerhardt
2,136,324	A	11/1938	John
2,302,111	A	11/1942	Dow et al.
2,353,621	A	7/1944	Sav et al.
2,770,825	A	11/1956	Pullen
2,930,055	A	3/1960	Fallen et al.
3,119,369	A	1/1964	Harland et al.
3,166,138	A	1/1965	Dunn
3,333,564	A	8/1967	Waters
3,375,375	A	3/1968	Robert et al.
3,381,652	A	5/1968	Schaefer et al.
3,457,575	A	7/1969	Bienek
3,550,714	A	12/1970	Bellinger
3,569,727	A	3/1971	Aggarwal et al.
3,649,981	A	3/1972	Woodworth
3,674,316	A	7/1972	De Bray
3,678,882	A	7/1972	Kinsella
3,690,559	A	9/1972	Rudloff
3,744,586	A	7/1973	Leinauer
3,756,667	A	9/1973	Bombardier et al.
3,809,004	A	5/1974	Leonheart
3,816,004	A	6/1974	Bignardi
3,845,831	A	11/1974	James
RE28,268	E	12/1974	Autrand
3,851,349	A	12/1974	Lowder
3,853,086	A	12/1974	Asplund
3,863,285	A	2/1975	Hukuba
3,888,181	A	6/1975	Kups
3,937,174	A	2/1976	Haaga
3,952,361	A	4/1976	Wilkins
3,989,311	A	11/1976	Debrey
3,989,931	A	11/1976	Phillips
4,004,313	A	1/1977	Capra
4,012,681	A	3/1977	Finger et al.
4,070,170	A	1/1978	Leinfelt
4,099,284	A	7/1978	Shinozaki et al.
4,119,900	A	10/1978	Kremnitz
4,175,589	A	11/1979	Nakamura et al.
4,175,892	A	11/1979	De bray
4,196,727	A	4/1980	Verkaart et al.
4,198,727	A	4/1980	Farmer
4,199,838	A	4/1980	Simonsson
4,209,254	A	6/1980	Reymond et al.
D258,901	S	4/1981	Keyworth
4,297,578	A	10/1981	Carter
4,305,234	A	12/1981	Pichelman
4,306,329	A	12/1981	Yokoi
4,309,758	A	1/1982	Halsall et al.
4,328,545	A	5/1982	Halsall et al.
4,367,403	A	1/1983	Miller
4,369,543	A	1/1983	Chen et al.
4,401,909	A	8/1983	Gorsek
4,416,033	A	11/1983	Specht
4,445,245	A	5/1984	Lu
4,465,370	A	8/1984	Yuasa et al.
4,477,998	A	10/1984	You
4,481,692	A	11/1984	Kurz
4,482,960	A	11/1984	Pryor
4,492,058	A	1/1985	Goldfarb et al.
4,513,469	A	4/1985	Godfrey et al.
D278,732	S	5/1985	Ohkado
4,518,437	A	5/1985	Sommer
4,534,637	A	8/1985	Suzuki et al.
4,556,313	A	12/1985	Miller et al.
4,575,211	A	3/1986	Matsumura et al.
4,580,311	A	4/1986	Kurz
4,601,082	A	7/1986	Kurz
4,618,213	A	10/1986	Chen
4,620,285	A	10/1986	Perdue
4,624,026	A	11/1986	Olson et al.
4,626,995	A	12/1986	Lofgren et al.
4,628,454	A	12/1986	Ito
4,638,445	A	1/1987	Mattaboni
4,644,156	A	2/1987	Takahashi et al.
4,649,504	A	3/1987	Krouglicof et al.
4,652,917	A	3/1987	Miller
4,654,492	A	3/1987	Koerner et al.
4,654,924	A	4/1987	Getz et al.
4,660,969	A	4/1987	Sorimachi et al.
4,662,854	A	5/1987	Fang
4,674,048	A	6/1987	Okumura
4,679,152	A	7/1987	Perdue
4,680,827	A	7/1987	Hummel
4,696,074	A	9/1987	Cavalli
D292,223	S	10/1987	Trumbull
4,700,301	A	10/1987	Dyke
4,700,427	A	10/1987	Knepper
4,703,820	A	11/1987	Reinaud
4,709,773	A	12/1987	Clement et al.
4,710,020	A	12/1987	Maddox et al.
4,712,740	A	12/1987	Duncan et al.
4,716,621	A	1/1988	Zoni
4,728,801	A	3/1988	O'Connor
4,733,343	A	3/1988	Yoneda et al.
4,733,431	A	3/1988	Martin
4,735,136	A	4/1988	Lee et al.
4,735,138	A	4/1988	Gawler et al.
4,748,336	A	5/1988	Fujie et al.
4,748,833	A	6/1988	Nagasawa
4,756,049	A	7/1988	Uehara
4,767,213	A	8/1988	Hummel
4,769,700	A	9/1988	Pryor
4,777,416	A	10/1988	George et al.
D298,766	S	11/1988	Tann et al.
4,782,550	A	11/1988	Jacobs
4,796,198	A	1/1989	Boultinghouse et al.
4,806,751	A	2/1989	Abe et al.
4,811,228	A	3/1989	Hyyppa
4,813,906	A	3/1989	Matsuyama et al.
4,815,157	A	3/1989	Tsuchiya
4,817,000	A	3/1989	Eberhardt
4,818,875	A	4/1989	Weiner
4,829,442	A	5/1989	Kadonoff et al.
4,829,626	A	5/1989	Harkonen et al.

(56) **References Cited**

U.S. PATENT DOCUMENTS

4,832,098 A 5/1989 Palinkas et al.
4,851,661 A 7/1989 Everett
4,854,000 A 8/1989 Takimoto
4,854,006 A 8/1989 Nishimura et al.
4,855,915 A 8/1989 Dallaire
4,857,912 A 8/1989 Everett et al.
4,858,132 A 8/1989 Holmquist
4,867,570 A 9/1989 Sorimachi et al.
4,880,474 A 11/1989 Koharagi et al.
4,887,415 A 12/1989 Martin
4,891,762 A 1/1990 Chotiros
4,893,025 A 1/1990 Lee
4,901,394 A 2/1990 Nakamura et al.
4,905,151 A 2/1990 Weiman et al.
4,909,972 A 3/1990 Britz
4,912,643 A 3/1990 Beirne
4,918,441 A 4/1990 Bohman
4,919,224 A 4/1990 Shyu et al.
4,919,489 A 4/1990 Kopsco
4,920,060 A 4/1990 Parrent et al.
4,920,605 A 5/1990 Takashima
4,933,864 A 6/1990 Evans et al.
4,937,912 A 7/1990 Kurz
4,953,253 A 9/1990 Fukuda et al.
4,954,962 A 9/1990 Evans et al.
4,955,714 A 9/1990 Stotler et al.
4,956,891 A 9/1990 Wulff
4,961,303 A 10/1990 McCarty et al.
4,961,304 A 10/1990 Ovsborn et al.
4,962,453 A 10/1990 Pong et al.
4,967,862 A 11/1990 Pong et al.
4,971,591 A 11/1990 Raviv et al.
4,973,912 A 11/1990 Kaminski et al.
4,974,283 A 12/1990 Holsten et al.
4,977,618 A 12/1990 Allen
4,977,639 A 12/1990 Takahashi et al.
4,986,663 A 1/1991 Cecchi et al.
5,001,635 A 3/1991 Yasutomi et al.
5,002,145 A 3/1991 Wakaumi et al.
5,012,886 A 5/1991 Jonas et al.
5,018,240 A 5/1991 Holman
5,020,186 A 6/1991 Lessig et al.
5,022,812 A 6/1991 Coughlan et al.
5,023,788 A 6/1991 Kitazume et al.
5,024,529 A 6/1991 Svetkoff et al.
D318,500 S 7/1991 Malewicki et al.
5,032,775 A 7/1991 Mizuno et al.
5,033,151 A 7/1991 Kraft et al.
5,033,291 A 7/1991 Podoloff et al.
5,040,116 A 8/1991 Evans et al.
5,045,769 A 9/1991 Everett
5,049,802 A 9/1991 Mintus et al.
5,051,906 A 9/1991 Evans et al.
5,062,819 A 11/1991 Mallory
5,070,567 A 12/1991 Holland
5,084,934 A 2/1992 Lessig et al.
5,086,535 A 2/1992 Grossmeyer et al.
5,090,321 A 2/1992 Abouav
5,093,955 A 3/1992 Blehert et al.
5,094,311 A 3/1992 Akeel
5,098,262 A 3/1992 Wecker et al.
5,105,502 A 4/1992 Takashima
5,105,550 A 4/1992 Shenoha
5,109,566 A 5/1992 Kobayashi et al.
5,111,401 A 5/1992 Everett, Jr. et al.
5,115,538 A 5/1992 Cochran et al.
5,127,128 A 7/1992 Lee
5,136,675 A 8/1992 Hodson
5,136,750 A 8/1992 Takashima et al.
5,142,985 A 9/1992 Stearns et al.
5,144,471 A 9/1992 Takanashi et al.
5,144,714 A 9/1992 Mori et al.
5,144,715 A 9/1992 Matsuyo et al.
5,152,028 A 10/1992 Hirano
5,152,202 A 10/1992 Strauss
5,154,617 A 10/1992 Suman et al.
5,155,684 A 10/1992 Burke et al.
5,163,202 A 11/1992 Kawakami et al.
5,163,320 A 11/1992 Goshima et al.
5,164,579 A 11/1992 Pryor et al.
5,165,064 A 11/1992 Mattaboni
5,170,352 A 12/1992 McTamaney et al.
5,173,881 A 12/1992 Sindle
5,182,833 A 2/1993 Yamaguchi et al.
5,187,662 A 2/1993 Kamimura et al.
5,202,742 A 4/1993 Frank et al.
5,204,814 A 4/1993 Noonan et al.
5,206,500 A 4/1993 Decker et al.
5,208,521 A 5/1993 Aoyama
5,216,777 A 6/1993 Moro et al.
5,222,786 A 6/1993 Sovis et al.
5,227,985 A 7/1993 DeMenthon
5,233,682 A 8/1993 Abe et al.
5,239,720 A 8/1993 Wood et al.
5,251,358 A 10/1993 Moro et al.
5,261,139 A 11/1993 Lewis
5,276,618 A 1/1994 Everett
5,276,939 A 1/1994 Uenishi
5,277,064 A 1/1994 Knigga et al.
5,279,672 A 1/1994 Betker et al.
5,284,452 A 2/1994 Corona
5,284,522 A 2/1994 Kobayashi et al.
5,293,955 A 3/1994 Lee
D345,707 S 4/1994 Alister
5,303,448 A 4/1994 Hennessey et al.
5,307,273 A 4/1994 Oh et al.
5,309,592 A 5/1994 Hiratsuka
5,310,379 A 5/1994 Hippely et al.
5,315,227 A 5/1994 Pierson et al.
5,319,827 A 6/1994 Yang
5,319,828 A 6/1994 Waldhauser et al.
5,321,614 A 6/1994 Ashworth
5,323,483 A 6/1994 Baeg
5,324,948 A 6/1994 Dudar et al.
5,331,713 A 7/1994 Tipton
5,341,186 A 8/1994 Kato
5,341,540 A 8/1994 Soupert et al.
5,341,549 A 8/1994 Wirtz et al.
5,345,649 A 9/1994 Whitlow
5,352,901 A 10/1994 Poorman
5,353,224 A 10/1994 Lee et al.
5,363,305 A 11/1994 Cox et al.
5,363,935 A 11/1994 Schempf et al.
5,369,347 A 11/1994 Yoo
5,369,838 A 12/1994 Wood et al.
5,386,862 A 2/1995 Glover et al.
5,399,951 A 3/1995 Lavallee et al.
5,400,244 A 3/1995 Watanabe et al.
5,404,612 A 4/1995 Ishikawa
5,410,479 A 4/1995 Coker
5,435,405 A 7/1995 Schempf et al.
5,440,216 A 8/1995 Kim
5,442,358 A 8/1995 Keeler et al.
5,444,965 A 8/1995 Colens
5,446,356 A 8/1995 Kim
5,446,445 A 8/1995 Bloomfield et al.
5,451,135 A 9/1995 Schempf et al.
5,454,129 A 10/1995 Kell
5,455,982 A 10/1995 Armstrong et al.
5,465,525 A 11/1995 Mifune et al.
5,465,619 A 11/1995 Sotack et al.
5,467,273 A 11/1995 Faibish et al.
5,471,560 A 11/1995 Allard et al.
5,491,670 A 2/1996 Weber
5,497,529 A 3/1996 Boesi
5,498,948 A 3/1996 Bruni et al.
5,502,638 A 3/1996 Takenaka
5,505,072 A 4/1996 Oreper
5,507,067 A 4/1996 Hoekstra et al.
5,510,893 A 4/1996 Suzuki
5,511,147 A 4/1996 Abdel
5,515,572 A 5/1996 Hoekstra et al.
5,534,762 A 7/1996 Kim
5,535,476 A 7/1996 Kresse et al.

(56) **References Cited**

U.S. PATENT DOCUMENTS

5,537,017 A 7/1996 Feiten et al.
5,537,711 A 7/1996 Tseng
5,539,953 A 7/1996 Kurz
5,542,146 A 8/1996 Hoekstra et al.
5,542,148 A 8/1996 Young
5,546,631 A 8/1996 Chambon
5,548,511 A 8/1996 Bancroft
5,551,119 A 9/1996 Wörwag
5,551,525 A 9/1996 Pack et al.
5,553,349 A 9/1996 Kilstrom et al.
5,555,587 A 9/1996 Guha
5,560,077 A 10/1996 Crotchett
5,568,589 A 10/1996 Hwang
D375,592 S 11/1996 Ljunggren
5,608,306 A 3/1997 Rybeck et al.
5,608,894 A 3/1997 Kawakami et al.
5,608,944 A 3/1997 Gordon
5,610,488 A 3/1997 Miyazawa
5,611,106 A 3/1997 Wulff
5,611,108 A 3/1997 Knowlton et al.
5,613,261 A 3/1997 Kawakami et al.
5,613,269 A 3/1997 Miwa
5,621,291 A 4/1997 Lee
5,622,236 A 4/1997 Azumi et al.
5,634,237 A 6/1997 Paranjpe
5,634,239 A 6/1997 Tuvin et al.
5,636,402 A 6/1997 Kubo et al.
5,642,299 A 6/1997 Hardin et al.
5,646,494 A 7/1997 Han
5,647,554 A 7/1997 Ikegami et al.
5,650,702 A 7/1997 Azumi
5,652,489 A 7/1997 Kawakami
5,682,313 A 10/1997 Edlund et al.
5,682,839 A 11/1997 Grimsley et al.
5,696,675 A 12/1997 Nakamura et al.
5,698,861 A 12/1997 Oh
5,709,007 A 1/1998 Chiang
5,710,506 A 1/1998 Broell et al.
5,714,119 A 2/1998 Kawagoe et al.
5,717,169 A 2/1998 Liang et al.
5,717,484 A 2/1998 Hamaguchi et al.
5,720,077 A 2/1998 Nakamura et al.
5,722,109 A 3/1998 Delmas et al.
5,732,401 A 3/1998 Conway
5,735,017 A 4/1998 Barnes et al.
5,735,959 A 4/1998 Kubo et al.
5,742,975 A 4/1998 Knowlton et al.
5,745,235 A 4/1998 Vercammen et al.
5,752,871 A 5/1998 Tsuzuki
5,756,904 A 5/1998 Oreper et al.
5,761,762 A 6/1998 Kubo
5,764,888 A 6/1998 Bolan et al.
5,767,437 A 6/1998 Rogers
5,767,960 A 6/1998 Orman
5,770,936 A 6/1998 Hirai et al.
5,777,596 A 7/1998 Herbert
5,778,486 A 7/1998 Kim
5,781,697 A 7/1998 Jeong
5,781,960 A 7/1998 Kilstrom et al.
5,784,755 A 7/1998 Karr et al.
5,786,602 A 7/1998 Pryor et al.
5,787,545 A 8/1998 Colens
5,793,900 A 8/1998 Nourbakhsh et al.
5,794,297 A 8/1998 Muta
5,802,665 A 9/1998 Knowlton et al.
5,812,267 A 9/1998 Everett et al.
5,814,808 A 9/1998 Takada et al.
5,815,880 A 10/1998 Nakanishi
5,815,884 A 10/1998 Imamura et al.
5,819,008 A 10/1998 Asama et al.
5,819,360 A 10/1998 Fujii
5,819,936 A 10/1998 Saveliev et al.
5,820,821 A 10/1998 Kawagoe et al.
5,821,730 A 10/1998 Drapkin
5,825,981 A 10/1998 Matsuda
5,828,770 A 10/1998 Leis et al.
5,831,597 A 11/1998 West et al.
5,836,045 A 11/1998 Anthony et al.
5,839,156 A 11/1998 Park et al.
5,839,532 A 11/1998 Yoshiji et al.
5,841,259 A 11/1998 Kim et al.
5,867,800 A 2/1999 Leif
5,867,861 A 2/1999 Kasen et al.
5,869,910 A 2/1999 Colens
5,894,621 A 4/1999 Kubo
5,896,611 A 4/1999 Haaga
5,903,124 A 5/1999 Kawakami
5,905,209 A 5/1999 Oreper
5,907,886 A 6/1999 Buscher
5,910,700 A 6/1999 Crotzer
5,911,260 A 6/1999 Suzuki
5,916,008 A 6/1999 Wong
5,924,167 A 7/1999 Wright et al.
5,926,909 A 7/1999 McGee
5,933,102 A 8/1999 Miller et al.
5,933,913 A 8/1999 Wright et al.
5,935,179 A 8/1999 Kleiner et al.
5,935,333 A 8/1999 Davis
5,940,346 A 8/1999 Sadowsky et al.
5,940,927 A 8/1999 Haegermarck et al.
5,940,930 A 8/1999 Oh et al.
5,942,869 A 8/1999 Katou et al.
5,943,730 A 8/1999 Boomgaarden
5,943,733 A 8/1999 Tagliaferri
5,943,933 A 8/1999 Evans et al.
5,947,225 A 9/1999 Kawakami et al.
5,950,408 A 9/1999 Schaedler
5,959,423 A 9/1999 Nakanishi et al.
5,968,281 A 10/1999 Wright et al.
5,974,348 A 10/1999 Rocks
5,974,365 A 10/1999 Mitchell
5,983,448 A 11/1999 Wright et al.
5,984,880 A 11/1999 Lander et al.
5,987,383 A 11/1999 Keller et al.
5,989,700 A 11/1999 Krivopal
5,991,951 A 11/1999 Kubo et al.
5,995,883 A 11/1999 Nishikado
5,995,884 A 11/1999 Allen et al.
5,996,167 A 12/1999 Close
5,998,953 A 12/1999 Nakamura et al.
5,998,971 A 12/1999 Corbridge
6,000,088 A 12/1999 Wright et al.
6,009,358 A 12/1999 Angott et al.
6,012,618 A 1/2000 Matsuo et al.
6,021,545 A 2/2000 Delgado et al.
6,023,813 A 2/2000 Thatcher et al.
6,023,814 A 2/2000 Imamura
6,025,687 A 2/2000 Himeda et al.
6,026,539 A 2/2000 Mouw et al.
6,030,464 A 2/2000 Azevedo
6,030,465 A 2/2000 Marcussen et al.
6,032,327 A 3/2000 Oka et al.
6,032,542 A 3/2000 Warnick et al.
6,036,572 A 3/2000 Sze
6,038,501 A 3/2000 Kawakami
6,040,669 A 3/2000 Hog
6,041,471 A 3/2000 Charky et al.
6,041,472 A 3/2000 Kasen et al.
6,046,800 A 4/2000 Ohtomo et al.
6,049,620 A 4/2000 Dickinson et al.
6,050,648 A 4/2000 Keleny
6,052,821 A 4/2000 Chouly et al.
6,055,042 A 4/2000 Sarangapani
6,055,702 A 5/2000 Imamura et al.
6,061,868 A 5/2000 Moritsch et al.
6,065,182 A 5/2000 Wright et al.
6,070,290 A 6/2000 Schwarze et al.
6,073,432 A 6/2000 Schaedler
6,076,025 A 6/2000 Ueno et al.
6,076,026 A 6/2000 Jambhekar et al.
6,076,226 A 6/2000 Reed
6,076,227 A 6/2000 Schallig et al.
6,081,257 A 6/2000 Zeller
6,088,020 A 7/2000 Mor

(56) **References Cited**

U.S. PATENT DOCUMENTS

6,094,775	A	8/2000	Behmer
6,099,091	A	8/2000	Campbell
6,101,670	A	8/2000	Song
6,101,671	A	8/2000	Wright et al.
6,108,031	A	8/2000	King et al.
6,108,067	A	8/2000	Okamoto
6,108,269	A	8/2000	Kabel
6,108,597	A	8/2000	Kirchner et al.
6,108,859	A	8/2000	Burgoon
6,112,143	A	8/2000	Allen et al.
6,112,996	A	9/2000	Matsuo
6,119,057	A	9/2000	Kawagoe
6,122,798	A	9/2000	Kobayashi et al.
6,124,694	A	9/2000	Bancroft et al.
6,125,498	A	10/2000	Roberts et al.
6,131,237	A	10/2000	Kasper et al.
6,138,063	A	10/2000	Himeda
6,142,252	A	11/2000	Kinto et al.
6,146,041	A	11/2000	Chen et al.
6,146,278	A	11/2000	Kobayashi
6,154,279	A	11/2000	Thayer
6,154,694	A	11/2000	Aoki et al.
6,160,479	A	12/2000	Ahlen et al.
6,167,332	A	12/2000	Kurtzberg et al.
6,167,587	B1	1/2001	Kasper et al.
6,192,548	B1	2/2001	Huffman
6,192,549	B1	2/2001	Kasen et al.
6,202,243	B1	3/2001	Beaufoy et al.
6,216,307	B1	4/2001	Kaleta et al.
6,220,865	B1	4/2001	Macri et al.
6,226,830	B1	5/2001	Hendriks et al.
6,230,362	B1	5/2001	Kasper et al.
6,237,741	B1	5/2001	Guidetti
6,240,342	B1	5/2001	Fiegert et al.
6,243,913	B1	6/2001	Frank et al.
6,255,793	B1	7/2001	Peless et al.
6,259,979	B1	7/2001	Holmquist
6,261,379	B1	7/2001	Conrad et al.
6,263,539	B1	7/2001	Baig
6,263,989	B1	7/2001	Won
6,272,936	B1	8/2001	Oreper et al.
6,276,478	B1	8/2001	Hopkins et al.
6,278,918	B1	8/2001	Dickson et al.
6,279,196	B2	8/2001	Kasen et al.
6,282,526	B1	8/2001	Ganesh
6,283,034	B1	9/2001	Miles
6,285,778	B1	9/2001	Nakajima et al.
6,285,930	B1	9/2001	Dickson et al.
6,286,181	B1	9/2001	Kasper et al.
6,300,737	B1	10/2001	Bergvall et al.
6,321,337	B1	11/2001	Reshef et al.
6,321,515	B1	11/2001	Colens
6,323,570	B1	11/2001	Nishimura et al.
6,324,714	B1	12/2001	Walz et al.
6,327,741	B1	12/2001	Reed
6,332,400	B1	12/2001	Meyer
6,339,735	B1	1/2002	Peless et al.
6,362,875	B1	3/2002	Burkley
6,370,453	B2	4/2002	Sommer
6,374,155	B1	4/2002	Wallach et al.
6,374,157	B1	4/2002	Takamura
6,381,802	B2	5/2002	Park
6,385,515	B1	5/2002	Dickson et al.
6,388,013	B1	5/2002	Saraf et al.
6,389,329	B1	5/2002	Colens
6,397,429	B1	6/2002	Legatt et al.
6,400,048	B1	6/2002	Nishimura et al.
6,401,294	B2	6/2002	Kasper
6,408,226	B1	6/2002	Byrne et al.
6,412,141	B2	7/2002	Kasper et al.
6,415,203	B1	7/2002	Inoue et al.
6,418,586	B2	7/2002	Fulghum
6,421,870	B1	7/2002	Basham et al.
6,427,285	B1	8/2002	Legatt et al.
6,430,471	B1	8/2002	Kintou et al.
6,431,296	B1	8/2002	Won
6,437,227	B1	8/2002	Theimer
6,437,465	B1	8/2002	Nishimura et al.
6,438,456	B1	8/2002	Feddema et al.
6,438,793	B1	8/2002	Miner et al.
6,442,476	B1	8/2002	Poropat
6,442,789	B1	9/2002	Legatt et al.
6,443,509	B1	9/2002	Levin et al.
6,444,003	B1	9/2002	Sutcliffe
6,446,302	B1	9/2002	Kasper et al.
6,454,036	B1	9/2002	Airey et al.
D464,091	S	10/2002	Christianson
6,457,206	B1	10/2002	Judson
6,459,955	B1	10/2002	Bartsch et al.
6,463,368	B1	10/2002	Feiten et al.
6,465,982	B1	10/2002	Bergvall et al.
6,473,167	B1	10/2002	Odell
6,480,762	B1	11/2002	Uchikubo et al.
6,481,515	B1	11/2002	Kirkpatrick et al.
6,482,252	B1	11/2002	Conrad et al.
6,490,539	B1	12/2002	Dickson et al.
6,491,127	B1	12/2002	Holmberg et al.
6,493,612	B1	12/2002	Bisset et al.
6,493,613	B2	12/2002	Peless et al.
6,496,754	B2	12/2002	Song et al.
6,496,755	B2	12/2002	Wallach et al.
6,502,657	B2	1/2003	Kerrebrock et al.
6,504,610	B1	1/2003	Bauer et al.
6,507,773	B2	1/2003	Parker et al.
6,519,808	B2	2/2003	Legatt et al.
6,525,509	B1	2/2003	Petersson et al.
D471,243	S	3/2003	Cioffi et al.
6,530,102	B1	3/2003	Pierce et al.
6,530,117	B2	3/2003	Peterson
6,532,404	B2	3/2003	Colens
6,535,793	B2	3/2003	Allard
6,540,424	B1	4/2003	Hall et al.
6,540,607	B2	4/2003	Mokris et al.
6,548,982	B1	4/2003	Papanikolopoulos et al.
6,553,612	B1	4/2003	Dyson et al.
6,556,722	B1	4/2003	Russell et al.
6,556,892	B2	4/2003	Kuroki et al.
6,557,104	B2	4/2003	Vu et al.
D474,312	S	5/2003	Stephens et al.
6,563,130	B2	5/2003	Dworkowski et al.
6,571,415	B2	6/2003	Gerber et al.
6,571,422	B1	6/2003	Gordon et al.
6,572,711	B2	6/2003	Sclafani et al.
6,574,536	B1	6/2003	Kawagoe et al.
6,580,246	B2	6/2003	Jacobs
6,584,376	B1	6/2003	Van Kommer
6,586,908	B2	7/2003	Petersson et al.
6,587,573	B1	7/2003	Stam et al.
6,590,222	B1	7/2003	Bisset et al.
6,594,551	B2	7/2003	McKinney et al.
6,594,844	B2	7/2003	Jones
6,597,076	B2	7/2003	Scheible et al.
D478,884	S	8/2003	Slipy et al.
6,601,265	B1	8/2003	Burlington
6,604,021	B2	8/2003	Imai et al.
6,604,022	B2	8/2003	Parker et al.
6,605,156	B1	8/2003	Clark et al.
6,609,269	B2	8/2003	Kasper
6,611,120	B2	8/2003	Song et al.
6,611,734	B2	8/2003	Parker et al.
6,611,738	B2	8/2003	Ruffner
6,615,108	B1	9/2003	Peless et al.
6,615,434	B1	9/2003	Davis et al.
6,615,885	B1	9/2003	Ohm
6,622,465	B2	9/2003	Jerome et al.
6,624,744	B1	9/2003	Wilson et al.
6,625,843	B2	9/2003	Kim et al.
6,629,028	B2	9/2003	Paromtchik et al.
6,633,150	B1	10/2003	Wallach et al.
6,637,546	B1	10/2003	Wang
6,639,659	B2	10/2003	Granger
6,658,325	B2	12/2003	Zweig
6,658,354	B2	12/2003	Lin
6,658,692	B2	12/2003	Lenkiewicz et al.

(56) **References Cited**

U.S. PATENT DOCUMENTS

6,658,693 B1 12/2003 Reed
6,661,239 B1 12/2003 Ozick
6,662,889 B2 12/2003 De Fazio et al.
6,668,951 B2 12/2003 Won
6,670,817 B2 12/2003 Fournier et al.
6,671,592 B1 12/2003 Bisset et al.
6,671,925 B2 1/2004 Field et al.
6,677,938 B1 1/2004 Maynard
6,687,571 B1 2/2004 Byrne et al.
6,690,134 B1 2/2004 Jones et al.
6,690,993 B2 2/2004 Foulke et al.
6,697,147 B2 2/2004 Ko et al.
6,705,332 B2 3/2004 Field et al.
6,711,280 B2 3/2004 Stafsudd et al.
6,732,826 B2 5/2004 Song et al.
6,735,811 B2 5/2004 Field et al.
6,735,812 B2 5/2004 Hekman et al.
6,737,591 B1 5/2004 Lapstun et al.
6,741,054 B2 5/2004 Koselka et al.
6,741,364 B2 5/2004 Lange et al.
6,748,297 B2 6/2004 Song et al.
6,756,703 B2 6/2004 Chang
6,760,647 B2 7/2004 Nourbakhsh et al.
6,764,373 B1 7/2004 Osawa et al.
6,769,004 B2 7/2004 Barrett
6,774,596 B1 8/2004 Bisset
6,779,380 B1 8/2004 Nieuwkamp
6,781,338 B2 8/2004 Jones et al.
6,809,490 B2 10/2004 Jones et al.
6,810,305 B2 10/2004 Kirkpatrick
6,810,350 B2 10/2004 Blakley
6,830,120 B1 12/2004 Yashima et al.
6,832,407 B2 12/2004 Salem et al.
6,836,701 B2 12/2004 McKee
6,841,963 B2 1/2005 Song et al.
6,845,297 B2 1/2005 Allard
6,848,146 B2 2/2005 Wright et al.
6,854,148 B1 2/2005 Rief et al.
6,856,811 B2 2/2005 Burdue et al.
6,859,010 B2 2/2005 Jeon et al.
6,859,682 B2 2/2005 Naka et al.
6,860,206 B1 3/2005 Rudakevych et al.
6,865,447 B2 3/2005 Lau et al.
6,870,792 B2 3/2005 Chiappetta
6,871,115 B2 3/2005 Huang et al.
6,883,201 B2 4/2005 Jones et al.
6,886,651 B1 5/2005 Slocum et al.
6,888,333 B2 5/2005 Laby
6,901,624 B2 6/2005 Mori et al.
6,906,702 B1 6/2005 Tanaka et al.
6,914,403 B2 7/2005 Tsurumi
6,917,854 B2 7/2005 Bayer
6,925,357 B2 8/2005 Wang et al.
6,925,679 B2 8/2005 Wallach et al.
6,929,548 B2 8/2005 Wang
D510,066 S 9/2005 Hickey et al.
6,938,298 B2 9/2005 Aasen
6,940,291 B1 9/2005 Ozick
6,941,199 B1 9/2005 Bottomley et al.
6,956,348 B2 10/2005 Landry et al.
6,957,712 B2 10/2005 Song et al.
6,960,986 B2 11/2005 Asama et al.
6,965,209 B2 11/2005 Jones et al.
6,965,211 B2 11/2005 Tsurumi
6,968,592 B2 11/2005 Takeuchi et al.
6,971,140 B2 12/2005 Kim
6,975,246 B1 12/2005 Trudeau
6,980,229 B1 12/2005 Ebersole
6,985,556 B2 1/2006 Shanmugavel et al.
6,993,954 B1 2/2006 George et al.
6,999,850 B2 2/2006 McDonald
7,013,527 B2 3/2006 Thomas et al.
7,024,278 B2 4/2006 Chiappetta et al.
7,024,280 B2 4/2006 Parker et al.
7,027,893 B2 4/2006 Perry et al.
7,030,768 B2 4/2006 Wanie
7,031,805 B2 4/2006 Lee et al.
7,032,469 B2 4/2006 Bailey
7,040,869 B2 5/2006 Beenker
7,041,029 B2 5/2006 Fulghum et al.
7,051,399 B2 5/2006 Field et al.
7,053,578 B2 5/2006 Diehl et al.
7,054,716 B2 5/2006 McKee et al.
7,055,210 B2 6/2006 Keppler et al.
7,057,120 B2 6/2006 Ma et al.
7,057,643 B2 6/2006 Iida et al.
7,059,012 B2 6/2006 Song et al.
7,065,430 B2 6/2006 Naka et al.
7,066,291 B2 6/2006 Martins et al.
7,069,124 B1 6/2006 Whittaker et al.
7,079,923 B2 7/2006 Abramson et al.
7,085,623 B2 8/2006 Siegers
7,085,624 B2 8/2006 Aldred et al.
7,113,847 B2 9/2006 Chmura et al.
7,133,746 B2 11/2006 Abramson et al.
7,142,198 B2 11/2006 Lee
7,148,458 B2 12/2006 Schell et al.
7,155,308 B2 12/2006 Jones
7,167,775 B2 1/2007 Abramson et al.
7,171,285 B2 1/2007 Kim et al.
7,173,391 B2 2/2007 Jones et al.
7,174,238 B1 2/2007 Zweig
7,188,000 B2 3/2007 Chiappetta et al.
7,193,384 B1 3/2007 Norman et al.
7,196,487 B2 3/2007 Jones et al.
7,201,786 B2 4/2007 Wegelin et al.
7,206,677 B2 4/2007 Hulden
7,211,980 B1 5/2007 Bruemmer et al.
7,225,500 B2 6/2007 Diehl et al.
7,246,405 B2 7/2007 Yan
7,248,951 B2 7/2007 Hulden
7,275,280 B2 10/2007 Haegermarck et al.
7,283,892 B1 10/2007 Boillot et al.
7,288,912 B2 10/2007 Landry et al.
7,318,248 B1 1/2008 Yan
7,320,149 B1 1/2008 Huffman et al.
7,321,807 B2 1/2008 Laski
7,324,870 B2 1/2008 Lee
7,328,196 B2 2/2008 Peters
7,332,890 B2 2/2008 Cohen et al.
7,346,428 B1 3/2008 Huffman et al.
7,352,153 B2 4/2008 Yan
7,359,766 B2 4/2008 Jeon et al.
7,360,277 B2 4/2008 Moshenrose et al.
7,363,108 B2 4/2008 Noda et al.
7,388,879 B2 6/2008 Sabe et al.
7,389,156 B2 6/2008 Ziegler et al.
7,389,166 B2 6/2008 Harwig et al.
7,408,157 B2 8/2008 Yan
7,418,762 B2 9/2008 Arai et al.
7,430,455 B2 9/2008 Casey et al.
7,430,462 B2 9/2008 Chiu et al.
7,441,298 B2 10/2008 Svendsen et al.
7,444,206 B2 10/2008 Abramson et al.
7,448,113 B2 11/2008 Jones et al.
7,459,871 B2 12/2008 Landry et al.
7,467,026 B2 12/2008 Sakagami et al.
7,474,941 B2 1/2009 Kim et al.
7,503,096 B2 3/2009 Lin
7,515,991 B2 4/2009 Egawa et al.
7,539,557 B2 5/2009 Yamauchi
7,555,363 B2 6/2009 Augenbraun et al.
7,557,703 B2 7/2009 Yamada et al.
7,568,259 B2 8/2009 Yan
7,571,511 B2 8/2009 Jones et al.
7,578,020 B2 8/2009 Jaworski et al.
7,600,521 B2 10/2009 Woo
7,603,744 B2 10/2009 Reindle
7,611,583 B2 11/2009 Buckley et al.
7,617,557 B2 11/2009 Reindle
7,620,476 B2 11/2009 Morse et al.
7,636,928 B2 12/2009 Uno
7,636,982 B2 12/2009 Jones et al.
7,647,144 B2 1/2010 Haegermarck

(56) **References Cited**

U.S. PATENT DOCUMENTS

7,650,666 B2 1/2010 Jang
7,660,650 B2 2/2010 Kawagoe et al.
7,663,333 B2 2/2010 Jones et al.
7,693,605 B2 4/2010 Park
7,706,917 B1 4/2010 Chiappetta et al.
7,761,954 B2 7/2010 Ziegler et al.
7,765,635 B2 8/2010 Park
7,784,147 B2 8/2010 Burkholder et al.
7,801,645 B2 9/2010 Taylor et al.
7,805,220 B2 9/2010 Taylor et al.
7,809,944 B2 10/2010 Kawamoto
7,832,048 B2 11/2010 Harwig et al.
7,849,555 B2 12/2010 Hahm et al.
7,853,645 B2 12/2010 Brown et al.
7,860,680 B2 12/2010 Arms et al.
7,920,941 B2 4/2011 Park et al.
7,937,800 B2 5/2011 Yan
7,957,836 B2 6/2011 Myeong et al.
8,087,117 B2 1/2012 Kapoor et al.
8,253,368 B2 8/2012 Landry et al.
8,386,081 B2 2/2013 Landry et al.
8,428,778 B2 4/2013 Landry et al.
8,456,125 B2 6/2013 Landry et al.
2001/0004719 A1 6/2001 Sommer
2001/0013929 A1 8/2001 Torsten
2001/0020200 A1 9/2001 Das et al.
2001/0025183 A1 9/2001 Shahidi
2001/0037163 A1 11/2001 Allard
2001/0043509 A1 11/2001 Green et al.
2001/0045883 A1 11/2001 Holdaway et al.
2001/0047231 A1 11/2001 Peless et al.
2001/0047895 A1 12/2001 De Fazio et al.
2002/0011367 A1 1/2002 Kolesnik
2002/0011813 A1 1/2002 Koselka et al.
2002/0016649 A1 2/2002 Jones
2002/0021219 A1 2/2002 Edwards
2002/0027652 A1 3/2002 Paromtchik et al.
2002/0036779 A1 3/2002 Kiyoi et al.
2002/0081937 A1 6/2002 Yamada et al.
2002/0095239 A1 7/2002 Wallach et al.
2002/0097400 A1 7/2002 Jung et al.
2002/0104963 A1 8/2002 Mancevski
2002/0108209 A1 8/2002 Peterson
2002/0112742 A1 8/2002 Bredo et al.
2002/0113973 A1 8/2002 Ge
2002/0116089 A1 8/2002 Kirkpatrick
2002/0120364 A1 8/2002 Colens
2002/0124343 A1 9/2002 Reed
2002/0153185 A1 10/2002 Song et al.
2002/0156556 A1 10/2002 Ruffner
2002/0159051 A1 10/2002 Guo
2002/0166193 A1 11/2002 Kasper
2002/0169521 A1 11/2002 Goodman et al.
2002/0173877 A1 11/2002 Zweig
2002/0189871 A1 12/2002 Won
2003/0009259 A1 1/2003 Hattori et al.
2003/0015232 A1 1/2003 Nguyen
2003/0019071 A1 1/2003 Field et al.
2003/0023356 A1 1/2003 Keable
2003/0024986 A1 2/2003 Mazz et al.
2003/0025472 A1 2/2003 Jones et al.
2003/0028286 A1 2/2003 Glenn et al.
2003/0030399 A1 2/2003 Jacobs
2003/0058262 A1 3/2003 Sato et al.
2003/0060928 A1 3/2003 Abramson et al.
2003/0067451 A1 4/2003 Tagg et al.
2003/0097875 A1 5/2003 Lentz et al.
2003/0120389 A1 6/2003 Abramson et al.
2003/0124312 A1 7/2003 Autumn
2003/0126352 A1 7/2003 Barrett
2003/0137268 A1 7/2003 Papanikolopoulos et al.
2003/0146384 A1 8/2003 Logsdon et al.
2003/0159232 A1 8/2003 Hekman et al.
2003/0168081 A1 9/2003 Lee et al.
2003/0175138 A1 9/2003 Beenker
2003/0192144 A1 10/2003 Song et al.
2003/0193657 A1 10/2003 Uomori et al.
2003/0216834 A1 11/2003 Allard
2003/0221114 A1 11/2003 Hino et al.
2003/0229421 A1 12/2003 Chmura et al.
2003/0229474 A1 12/2003 Suzuki et al.
2003/0233171 A1 12/2003 Heiligensetzer
2003/0233177 A1 12/2003 Johnson et al.
2003/0233870 A1 12/2003 Mancevski
2003/0233930 A1 12/2003 Ozick
2004/0016077 A1 1/2004 Song et al.
2004/0020000 A1 2/2004 Jones
2004/0030448 A1 2/2004 Solomon
2004/0030449 A1 2/2004 Solomon
2004/0030450 A1 2/2004 Solomon
2004/0030451 A1 2/2004 Solomon
2004/0030570 A1 2/2004 Solomon
2004/0030571 A1 2/2004 Solomon
2004/0031113 A1 2/2004 Wosewick et al.
2004/0049877 A1 3/2004 Jones et al.
2004/0055163 A1 3/2004 McCambridge et al.
2004/0068351 A1 4/2004 Solomon
2004/0068415 A1 4/2004 Solomon
2004/0068416 A1 4/2004 Solomon
2004/0074038 A1 4/2004 Im et al.
2004/0074044 A1 4/2004 Diehl et al.
2004/0076324 A1 4/2004 Burl et al.
2004/0083570 A1 5/2004 Song et al.
2004/0085037 A1 5/2004 Jones et al.
2004/0088079 A1 5/2004 Lavarec et al.
2004/0093122 A1 5/2004 Galibraith
2004/0098167 A1 5/2004 Yi et al.
2004/0111184 A1 6/2004 Chiappetta et al.
2004/0111821 A1 6/2004 Lenkiewicz et al.
2004/0113777 A1 6/2004 Matsuhira et al.
2004/0117064 A1 6/2004 McDonald
2004/0117846 A1 6/2004 Karaoguz et al.
2004/0118998 A1 6/2004 Wingett et al.
2004/0128028 A1 7/2004 Miyamoto et al.
2004/0133316 A1 7/2004 Dean
2004/0134336 A1 7/2004 Solomon
2004/0134337 A1 7/2004 Solomon
2004/0143919 A1 7/2004 Wilder
2004/0148419 A1 7/2004 Chen et al.
2004/0148731 A1 8/2004 Damman et al.
2004/0153212 A1 8/2004 Profio et al.
2004/0156541 A1 8/2004 Jeon et al.
2004/0158357 A1 8/2004 Lee et al.
2004/0181706 A1 9/2004 Chen et al.
2004/0187249 A1 9/2004 Jones et al.
2004/0187457 A1 9/2004 Colens
2004/0196451 A1 10/2004 Aoyama
2004/0200505 A1 10/2004 Taylor et al.
2004/0201361 A1 10/2004 Koh et al.
2004/0204792 A1 10/2004 Taylor et al.
2004/0204804 A1 10/2004 Lee et al.
2004/0210345 A1 10/2004 Noda et al.
2004/0210347 A1 10/2004 Sawada et al.
2004/0211444 A1 10/2004 Taylor et al.
2004/0221790 A1 11/2004 Sinclair et al.
2004/0236468 A1 11/2004 Taylor et al.
2004/0244138 A1 12/2004 Taylor et al.
2004/0255425 A1 12/2004 Arai et al.
2005/0000543 A1 1/2005 Taylor et al.
2005/0010330 A1 1/2005 Abramson et al.
2005/0010331 A1 1/2005 Taylor et al.
2005/0015920 A1 1/2005 Kim et al.
2005/0021181 A1 1/2005 Kim et al.
2005/0028316 A1 2/2005 Thomas et al.
2005/0053912 A1 3/2005 Roth et al.
2005/0055796 A1 3/2005 Wright et al.
2005/0067994 A1 3/2005 Jones et al.
2005/0081782 A1 4/2005 Buckley et al.
2005/0085947 A1 4/2005 Aldred et al.
2005/0091782 A1 5/2005 Gordon et al.
2005/0091786 A1 5/2005 Wright et al.
2005/0137749 A1 6/2005 Jeon et al.
2005/0144751 A1 7/2005 Kegg et al.
2005/0150074 A1 7/2005 Diehl et al.

(56) **References Cited**

U.S. PATENT DOCUMENTS

2005/0150519	A1	7/2005	Keppler et al.
2005/0154795	A1	7/2005	Kuz et al.
2005/0156562	A1	7/2005	Cohen et al.
2005/0162119	A1	7/2005	Landry et al.
2005/0163119	A1	7/2005	Ito et al.
2005/0165508	A1	7/2005	Kanda et al.
2005/0166354	A1	8/2005	Uehigashi
2005/0166355	A1	8/2005	Tani
2005/0172445	A1	8/2005	Diehl et al.
2005/0183229	A1	8/2005	Uehigashi
2005/0183230	A1	8/2005	Uehigashi
2005/0187678	A1	8/2005	Myeong et al.
2005/0192707	A1	9/2005	Park et al.
2005/0204717	A1	9/2005	Colens
2005/0209736	A1	9/2005	Kawagoe
2005/0211880	A1	9/2005	Schell et al.
2005/0212929	A1	9/2005	Schell et al.
2005/0213082	A1	9/2005	DiBernardo et al.
2005/0213109	A1	9/2005	Schell et al.
2005/0217042	A1	10/2005	Reindle
2005/0218852	A1	10/2005	Landry et al.
2005/0222933	A1	10/2005	Wesby
2005/0229340	A1	10/2005	Sawalski et al.
2005/0229355	A1	10/2005	Crouch et al.
2005/0235451	A1	10/2005	Yan
2005/0251292	A1	11/2005	Casey et al.
2005/0255425	A1	11/2005	Pierson
2005/0258154	A1	11/2005	Blankenship et al.
2005/0273967	A1	12/2005	Taylor et al.
2005/0288819	A1	12/2005	De Guzman
2006/0000050	A1	1/2006	Cipolla et al.
2006/0009879	A1	1/2006	Lynch et al.
2006/0010638	A1	1/2006	Shimizu et al.
2006/0020369	A1	1/2006	Taylor et al.
2006/0020370	A1	1/2006	Abramson
2006/0021168	A1	2/2006	Nishikawa
2006/0025134	A1	2/2006	Cho et al.
2006/0037170	A1	2/2006	Shimizu
2006/0042042	A1	3/2006	Mertes et al.
2006/0044546	A1	3/2006	Lewin et al.
2006/0060216	A1	3/2006	Woo
2006/0061657	A1	3/2006	Rew et al.
2006/0064828	A1	3/2006	Stein et al.
2006/0087273	A1	4/2006	Ko et al.
2006/0089765	A1	4/2006	Pack et al.
2006/0100741	A1	5/2006	Jung
2006/0107894	A1	5/2006	Buckley et al.
2006/0119839	A1	6/2006	Bertin et al.
2006/0143295	A1	6/2006	Costa-Requena et al.
2006/0146776	A1	7/2006	Kim
2006/0150361	A1	7/2006	Aldred et al.
2006/0184293	A1	8/2006	Konandreas et al.
2006/0185690	A1	8/2006	Song et al.
2006/0190133	A1	8/2006	Konandreas et al.
2006/0190134	A1	8/2006	Ziegler et al.
2006/0190146	A1	8/2006	Morse et al.
2006/0196003	A1	9/2006	Song et al.
2006/0200281	A1	9/2006	Ziegler et al.
2006/0220900	A1	10/2006	Ceskutti et al.
2006/0229774	A1	10/2006	Park et al.
2006/0259194	A1	11/2006	Chiu
2006/0259494	A1	11/2006	Watson et al.
2006/0278161	A1	12/2006	Burkholder et al.
2006/0288519	A1	12/2006	Jaworski et al.
2006/0293787	A1	12/2006	Kanda et al.
2006/0293808	A1	12/2006	Qian
2007/0006404	A1	1/2007	Cheng et al.
2007/0016328	A1	1/2007	Ziegler et al.
2007/0017061	A1	1/2007	Yan
2007/0028574	A1	2/2007	Yan
2007/0032904	A1	2/2007	Kawagoe et al.
2007/0042716	A1	2/2007	Goodall et al.
2007/0043459	A1	2/2007	Abbott et al.
2007/0061041	A1	3/2007	Zweig
2007/0061043	A1	3/2007	Seaburg
2007/0114975	A1	5/2007	Cohen et al.
2007/0142964	A1	6/2007	Abramson
2007/0150096	A1	6/2007	Yeh et al.
2007/0156286	A1	7/2007	Yamauchi
2007/0157415	A1	7/2007	Lee et al.
2007/0157420	A1	7/2007	Lee et al.
2007/0179670	A1	8/2007	Chiappetta et al.
2007/0226949	A1	10/2007	Hahm et al.
2007/0234492	A1	10/2007	Svendsen et al.
2007/0244610	A1	10/2007	Ozick et al.
2007/0245511	A1	10/2007	Hahm et al.
2007/0250212	A1	10/2007	Halloran et al.
2007/0261193	A1	11/2007	Gordon et al.
2007/0266508	A1	11/2007	Jones et al.
2008/0007203	A1	1/2008	Cohen et al.
2008/0039974	A1	2/2008	Sandin et al.
2008/0052846	A1	3/2008	Kapoor et al.
2008/0091304	A1	4/2008	Ozick et al.
2008/0109126	A1	5/2008	Sandin et al.
2008/0134458	A1	6/2008	Ziegler et al.
2008/0140255	A1	6/2008	Ziegler et al.
2008/0155768	A1	6/2008	Ziegler et al.
2008/0184518	A1	8/2008	Taylor et al.
2008/0266748	A1	10/2008	Lee
2008/0276407	A1	11/2008	Schnittman et al.
2008/0281470	A1	11/2008	Gilbert et al.
2008/0282494	A1	11/2008	Won et al.
2008/0294288	A1	11/2008	Yamauchi
2008/0302586	A1	12/2008	Yan
2008/0307590	A1	12/2008	Jones et al.
2009/0007366	A1	1/2009	Svendsen et al.
2009/0038089	A1	2/2009	Landry et al.
2009/0048727	A1	2/2009	Hong et al.
2009/0049640	A1	2/2009	Lee et al.
2009/0055022	A1	2/2009	Casey et al.
2009/0102296	A1	4/2009	Greene et al.
2009/0292393	A1	11/2009	Casey et al.
2010/0006028	A1	1/2010	Buckley et al.
2010/0011529	A1	1/2010	Won et al.
2010/0049365	A1	2/2010	Jones et al.
2010/0063628	A1	3/2010	Landry et al.
2010/0082193	A1	4/2010	Chiappetta
2010/0107355	A1	5/2010	Won et al.
2010/0257690	A1	10/2010	Jones et al.
2010/0257691	A1	10/2010	Jones et al.
2010/0263158	A1	10/2010	Jones et al.
2010/0268384	A1	10/2010	Jones et al.
2010/0293742	A1	11/2010	Chung et al.
2010/0312429	A1	12/2010	Jones et al.

FOREIGN PATENT DOCUMENTS

DE	3536907	C2	2/1989
DE	3404202	C2	12/1992
DE	199311014	U1	10/1993
DE	4338841	A1	5/1995
DE	4414683	A1	10/1995
DE	19849978		2/2001
DE	102004038074		6/2005
DE	10357636		7/2005
DE	102004041021	B3	8/2005
DE	102005046813	A1	4/2007
DK	338988	A	12/1988
EP	0265542	A1	5/1988
EP	0281085	A2	9/1988
EP	0286328	A1	10/1988
EP	0294101	A2	12/1988
EP	0352045	A2	1/1990
EP	0433697	A2	6/1991
EP	0437024	A1	7/1991
EP	0554978	A2	8/1993
EP	0615719	A1	9/1994
EP	0792726	A1	9/1997
EP	0930040	A2	7/1999
EP	0845237	B1	4/2000
EP	0861629	B1	9/2001
EP	1228734		8/2002
EP	1380245	A1	1/2004
EP	1380246	A2	1/2004

(56) **References Cited**

FOREIGN PATENT DOCUMENTS

EP	1018315	B1	11/2004
EP	1553472	A1	7/2005
EP	1557730	A1	7/2005
EP	1642522	A2	4/2006
EP	1836941	A2	9/2007
ES	2238196	A1	8/2005
FR	722755		3/1932
FR	2601443	A1	1/1988
FR	2828589	A1	2/2003
GB	702426		1/1954
GB	2128842	A	5/1984
GB	2213047		8/1989
GB	2225221	A	5/1990
GB	2267360	A	12/1993
GB	2283838	A	5/1995
GB	2284957	A	6/1995
GB	2300082	A	10/1996
GB	2344747	A	6/2000
GB	2404330	A	2/2005
GB	2417354	A	2/2006
JP	53021869		2/1978
JP	53110257	A2	9/1978
JP	57014726		1/1982
JP	57064217		4/1982
JP	59005315		1/1984
JP	59033511	U	3/1984
JP	59094005		5/1984
JP	59099308		6/1984
JP	59112311		6/1984
JP	59120124	A	7/1984
JP	59131668	U	9/1984
JP	59164973		9/1984
JP	59184917	A	10/1984
JP	2283343	A2	11/1984
JP	59212924		12/1984
JP	59226909		12/1984
JP	60089213	A	5/1985
JP	60211510	A	10/1985
JP	60259895		12/1985
JP	61023221		1/1986
JP	61097712	A	5/1986
JP	61160366		7/1986
JP	62070709		4/1987
JP	62074018	A	4/1987
JP	62120510	A	6/1987
JP	62154008		7/1987
JP	62164431		7/1987
JP	62263507	A	11/1987
JP	62263508	A	11/1987
JP	62189057	U	12/1987
JP	63079623	A	4/1988
JP	63158032		7/1988
JP	63203483	A	8/1988
JP	63241610	A	10/1988
JP	1118752		8/1989
JP	2-6312	U	1/1990
JP	3051023		3/1991
JP	3051023	A	3/1991
JP	4019586		1/1992
JP	4074285	A	3/1992
JP	4084921	A	3/1992
JP	5023269	A	2/1993
JP	5042076	A	2/1993
JP	5046246		2/1993
JP	5091604	A	4/1993
JP	5095879	A	4/1993
JP	5150827	A	6/1993
JP	5150829	A	6/1993
JP	5054620	U	7/1993
JP	5040519	Y2	10/1993
JP	05257527	A	10/1993
JP	5257533		10/1993
JP	05285861	A	11/1993
JP	5302836	A	11/1993
JP	5312514	A	11/1993
JP	05046239	Y2	12/1993
JP	5341904	A	12/1993
JP	6003251	U	1/1994
JP	6038912		2/1994
JP	6105781	A	4/1994
JP	6137828	A	5/1994
JP	6154143	A	6/1994
JP	6293095	A	10/1994
JP	06327 598	A	11/1994
JP	06327598		11/1994
JP	7047046	A	2/1995
JP	07129239	A	5/1995
JP	7059702	B	6/1995
JP	07222705	A2	8/1995
JP	7270518	A	10/1995
JP	7281742		10/1995
JP	7311041		11/1995
JP	7313417	A	12/1995
JP	7319542		12/1995
JP	8000393	A	1/1996
JP	8016241		1/1996
JP	8016776	A	1/1996
JP	8063229		3/1996
JP	8083125		3/1996
JP	8084696	A	4/1996
JP	8089449	A	4/1996
JP	08089451	A	4/1996
JP	2520732		5/1996
JP	8123548	A	5/1996
JP	8152916	A	6/1996
JP	8256960		10/1996
JP	8263137	A	10/1996
JP	8286741		11/1996
JP	8286744		11/1996
JP	8322774		12/1996
JP	8335112	A	12/1996
JP	8339297	A	12/1996
JP	943901		2/1997
JP	9044240	A	2/1997
JP	9066855	A	3/1997
JP	9145309	A	6/1997
JP	09160644	A	6/1997
JP	09179625	A	7/1997
JP	09179685		7/1997
JP	09185410		7/1997
JP	9192069	A	7/1997
JP	2555263	Y2	8/1997
JP	9204223	A	8/1997
JP	09206258	A	8/1997
JP	09233712	A	9/1997
JP	09251318		9/1997
JP	9265319	A	10/1997
JP	9269807	A	10/1997
JP	9269810	A	10/1997
JP	9319431	A1	12/1997
JP	9319432	A	12/1997
JP	9319434	A	12/1997
JP	9325812	A	12/1997
JP	10055215	A	2/1998
JP	10117973	A	5/1998
JP	10118963	A	5/1998
JP	10165738	A	6/1998
JP	10177414	A	6/1998
JP	10214114		8/1998
JP	10228316		8/1998
JP	10260727		9/1998
JP	10295595	A	11/1998
JP	10314088		12/1998
JP	11015941	A	1/1999
JP	11065655		3/1999
JP	11085269		3/1999
JP	11102219		4/1999
JP	11102220	A	4/1999
JP	11162454	A	6/1999
JP	11174145	A	7/1999
JP	11175149	A	7/1999
JP	11178765	A	7/1999
JP	114008764	A	7/1999
JP	11212642	A	8/1999

(56) **References Cited**

FOREIGN PATENT DOCUMENTS

JP	11213157	A	8/1999
JP	11282532	A	10/1999
JP	11282533	A	10/1999
JP	11295412	A	10/1999
JP	11346964		12/1999
JP	2000047728		2/2000
JP	2000056006	A	2/2000
JP	2000056831	A	2/2000
JP	2000060782	A	2/2000
JP	2000066722	A	3/2000
JP	2000075925	A	3/2000
JP	2000102499	A	4/2000
JP	10240343		5/2000
JP	2000275321		10/2000
JP	2000279353	A	10/2000
JP	2000353014	A	12/2000
JP	2001022443	A	1/2001
JP	2001067588		3/2001
JP	2001087182		4/2001
JP	2001121455		5/2001
JP	2001125641		5/2001
JP	2001508572	A	6/2001
JP	2001197008	A	7/2001
JP	3197758	B2	8/2001
JP	3201903	B2	8/2001
JP	2001216482	A	8/2001
JP	2001258807		9/2001
JP	2001265437	A	9/2001
JP	2001275908	A	10/2001
JP	2001289939		10/2001
JP	2001306170	A	11/2001
JP	2002073170	A	3/2002
JP	2002078650	A	3/2002
JP	2002204768	A	7/2002
JP	2002204769	A	7/2002
JP	2002247510	A	8/2002
JP	2002532180	A	10/2002
JP	2002323925		11/2002
JP	2002333920	A	11/2002
JP	2002355206		12/2002
JP	2002360471	A	12/2002
JP	2002360482	A	12/2002
JP	2002366227		12/2002
JP	2002369778		12/2002
JP	2003005296	A	1/2003
JP	2003010076	A	1/2003
JP	2003010088	A	1/2003
JP	2003028528	A	1/2003
JP	2003036116	A	2/2003
JP	2003038401	A	2/2003
JP	2003038402	A	2/2003
JP	2003047579		2/2003
JP	2003061882	A	3/2003
JP	2003084994		3/2003
JP	2003167628	A	6/2003
JP	2003180586	A	7/2003
JP	2003180587	A	7/2003
JP	2003186539	A	7/2003
JP	2003190064	A	7/2003
JP	2003241836	A	8/2003
JP	2003262520	A	9/2003
JP	2003304992	A	10/2003
JP	2003310509	A	11/2003
JP	2003330543	A	11/2003
JP	2004123040	A	4/2004
JP	2004148021	A	5/2004
JP	2004160102	A	6/2004
JP	2004166968	A	6/2004
JP	2004198330	A	7/2004
JP	2004219185		8/2004
JP	2004351234	A	12/2004
JP	2005118354	A	5/2005
JP	2005211360	A	8/2005
JP	2005224265	A	8/2005
JP	2005230032	A	9/2005
JP	2005245916	A	9/2005
JP	2005346700		12/2005
JP	2005352707	A	12/2005
JP	2006043071	A	2/2006
JP	2006155274	A	6/2006
JP	2006164223	A	6/2006
JP	2006227673	A	8/2006
JP	2006247467	A	9/2006
JP	2006260161	A	9/2006
JP	2006293662	A	10/2006
JP	2006296697	A	11/2006
JP	2007034866	A	2/2007
JP	2007213180	A	8/2007
JP	2009015611	A	1/2009
JP	2010198552	A	9/2010
WO	199526512	A1	10/1995
WO	199530887	A1	11/1995
WO	199617258	A1	6/1996
WO	199715224	A1	5/1997
WO	199740734	A1	11/1997
WO	199741451	A1	11/1997
WO	199853456	A1	11/1998
WO	199905580	A2	2/1999
WO	199916078	A1	4/1999
WO	1999028800		6/1999
WO	199938056	A1	7/1999
WO	199938237	A1	7/1999
WO	199943250	A1	9/1999
WO	1999059042		11/1999
WO	200038026	A1	6/2000
WO	200038028	A1	6/2000
WO	200038029	A1	6/2000
WO	2000036962		6/2000
WO	200004430	A1	10/2000
WO	200078410	A1	12/2000
WO	200106904	A1	2/2001
WO	200106905	A1	2/2001
WO	2001080703	A1	11/2001
WO	200191623	A2	12/2001
WO	2002024292	A1	3/2002
WO	200239864	A1	5/2002
WO	200239868	A1	5/2002
WO	2003026474		5/2002
WO	2002058527	A1	8/2002
WO	2002062194	A1	8/2002
WO	2002067744	A1	9/2002
WO	2002067745	A1	9/2002
WO	2002067752	A1	9/2002
WO	2002069774	A1	9/2002
WO	2002069775	A2	9/2002
WO	2002071175	A1	9/2002
WO	2002074150	A1	9/2002
WO	2002075356	A1	9/2002
WO	2002075469	A1	9/2002
WO	2002075470	A1	9/2002
WO	2002081074	A1	10/2002
WO	2002101477	A2	12/2002
WO	2003015220	A1	2/2003
WO	2003024292	A2	3/2003
WO	2003040546	A1	5/2003
WO	2003040845	A1	5/2003
WO	2003040846	A1	5/2003
WO	2003062850	A2	7/2003
WO	2003062852	A1	7/2003
WO	2004004533	A1	1/2004
WO	2004004534	A1	1/2004
WO	2004006034	A2	1/2004
WO	2004025947	A2	3/2004
WO	2004058028	A2	7/2004
WO	2004059409	A1	7/2004
WO	2005006935	A1	1/2005
WO	2005037496	A1	4/2005
WO	2005055795	A1	6/2005
WO	2005055796	A2	6/2005
WO	2005076545	A1	8/2005
WO	2005077243	A1	8/2005
WO	2005077244	A1	8/2005
WO	2005081074	A1	9/2005
WO	2005082223		9/2005

(56) **References Cited**

FOREIGN PATENT DOCUMENTS

WO	2005083541	A1	9/2005
WO	2005098475	A1	10/2005
WO	2005098476	A1	10/2005
WO	2006046400	A1	5/2006
WO	2006061133	A1	6/2006
WO	2006068403	A1	6/2006
WO	2006073248	A1	7/2006
WO	2006089307	A2	8/2006
WO	2007028049	A2	3/2007
WO	2007036490	A2	4/2007
WO	2007065033	A2	6/2007
WO	2007137234	A2	11/2007
WO	2002075350	A1	1/2012

OTHER PUBLICATIONS

Ascii, Mar. 25, 2002, http://ascii.jp/elem/000/000/330/330024/, accessed Nov. 2011, 15 pages (with English translation).

Barker, "Navigation by the Stars—Ben Barker 4th Year Project," Nov. 2004, 20 pages.

Becker et al., "Reliable Navigation Using Landmarks, " IEEE International Conference on Robotics and Automation, 0-7803-1965-6, pp. 401-406, 1995.

Benayad-Cherif et al., "Mobile Robot Navigation Sensors," SPIE vol. 1831 Mobile Robots, VII, pp. 378-387, 1992.

Betke et al. "Mobile robot localization using landmarks," Proceedings of the IEEE/RSJ/GI International Conference on Intelligent Robots and Systems '94 Advanced Robotic Systems and the Real World' (IROS '94), Accessed via IEEE Xplore, 1994, 8 pages.

Bison et al., "Using a structured beacon for cooperative position estimation," *Robotics and Autonomous Systems*, 29(1):33-40, Oct. 1999.

Blaasvaer et al., "AMOR—An Autonomous Mobile Robot Navigation System," Proceedings of the IEEE International Conference on Systems, Man, and Cybernetics, pp. 2266-2271, 1994.

Borges et al., "Optimal Mobile Robot Pose Estimation Using Geometrical Maps," IEEE Transactions on Robotics and Automation, 18(1): 87-94, Feb. 2002.

Braunstingl et al., "Fuzzy Logic Wall Following of a Mobile Robot Based on the Concept of General Perception," ICAR '95, 7th International Conference on Advanced Robotics, Sant Feliu De Guixols, Spain, pp. 367-376, Sep. 1995.

Bulusu et al., "Self Configuring Localization systems: Design and Experimental Evaluation,"*ACM Transactions on Embedded Computing Systems*, 3(1):24-60, 2003.

Caccia et al., "Bottom-Following for Remotely Operated Vehicles,"5th IFAC Conference, Alaborg, Denmark, pp. 245-250, Aug. 2000.

Certified U.S. Appl. No. 60/605,066 as provided to WIPO in PCT/US2005/030422, corresponding to National Stage Entry U.S. Appl. No. 11/574,290, U.S.publication 2008/0184518, filed Aug. 27, 2004.

Certified U.S. Appl. No. 60/605,181 as provided to WIPO in PCT/US2005/030422, corresponding to National Stage Entry U.S. Appl. No. 11/574,290, U.S.publication 2008/0184518, filed Aug. 27, 2004.

Chae et al., "StarLITE: A new artificial landmark for the navigation of mobile robots," http://www.irc.atr.jp/jk-nrs2005/pdf/Starlite.pdf, 4 pages, 2005.

Chamberlin et al., "Team 1: Robot Locator Beacon System, " NASA Goddard SFC, Design Proposal, 15 pages, Feb. 2006.

Champy, "Physical management of IT assets in Data Centers using RFID technologies," RFID 2005 University, Oct. 12-14, 2005 , 19 pages.

Chiri, "Joystick Control for Tiny OS Robot," http://www.eecs.berkeley.edu/Programs/ugrad/superb/papers2002/chiri.pdf. 12 pages, Aug. 2002.

Christensen et al. "Theoretical Methods for Planning and Control in Mobile Robotics," 1997 First International Conference on Knowledge-Based Intelligent Electronic Systems, Adelaide, Australia, pp. 81-86, May 1997.

CleanMate 365, Intelligent Automatic Vacuum Cleaner, Model No. QQ-1, User Manual www.metapo.com/support/user_manual.pdf, Dec. 2005, 11 pages.

Clerentin et al., "A localization method based on two omnidirectional perception systems cooperation," *Proc of IEEE International Conference on Robotics & Automation*, San Francisco, CA vol. 2, pp. 1219-1224, Apr. 2000.

Corke, "High Performance Visual serving for robots end-point control," SPIE vol. 2056, Intelligent Robots and Computer Vision, 1993, 10 pages.

Cozman et al., "Robot Localization using a Computer Vision Sextant," IEEE International Midwest Conference on Robotics and Automation, pp. 106-111, 1995.

D'Orazio et al., "Model based Vision System for mobile robot position estimation", *SPIE*, vol. 2058 Mobile Robots VIII, pp. 38-49, 1992.

De Bakker et al., "Smart PSD—Array for sheet of light range imaging", Proc. of *SPIE*, vol. 3965, pp. 1-12, May 2000.

Denning Roboscrub image (1989), 1 page.

Desaulniers et al., "An Efficient Algorithm to find a shortest path for a car-like Robot," *IEEE Transactions on robotics and Automation*, 11(6):819-828, Dec. 1995.

Dorfmüller-Ulhaas, "Optical Tracking From User Motion to 3D Interaction," http://www.cg.tuwien.ac.at/research/publications/2002/Dorfmueller-Ulhaas-thesis, 182 pages, 2002.

Dorsch et al., "Laser Triangulation: Fundamental uncertainty in distance measurement," *Applied Optics*, 33(7):1306-1314, Mar. 1994.

Doty et al., "Sweep Strategies for a Sensory-Driven, Behavior-Based Vacuum Cleaning Agent," AAAI 1993 Fall Symposium Series, Instantiating Real-World Agents, pp. 1-6, Oct. 22-24, 1993.

Dudek et al., "Localizing a Robot with Minimum Travel" *Proceedings of the sixth annual ACM-SIAM symposium on Discrete Algorithms*, 27(2):583-604, Apr. 1998.

Dulimarta et al., "Mobile Robot Localization in Indoor Environment", *Pattern Recognition*, 30(1):99-111, 1997.

Dyson's Robot Vacuum Cleaner—the DC06, May 2004, Retrieved from the Internet: URL< http://www.gizmag.com/go/1282/>. Accessed Nov. 2011, 3 pages.

EBay, "Roomba Timer -> Timed Cleaning—Floorvac Robotic Vacuum," Retrieved from the Internet: URL Cgi.ebay.corn/ws/eBay|SAP|.dll?viewitem&category=43526&item=4375198387 &rd=1, 5 pages, Apr. 2005.

Electrolux Trilobite, "Time to enjoy life," Retrieved from the Internet: URL<http://www.robocon.co.kr/trilobite/Presentation_Trilobite_Kor_030104.ppt, 26 pages, accessed Dec. 2011.

Electrolux Trilobite, Jan. 12, 2001, http://www.electroluxui.com:8080/2002%5C822%5C833102EN.pdf, accessed Jul. 2, 2012, 10 pages.

Electrolux, "Designed for the well-lived home," Retrieved from the Internet: URL<http://www.electroluxusa.com/node57.as[?currentURL=node142.asp%3F >. Accessed Mar. 2005, 2 pages.

Eren et al., "Accuracy in position estimation of mobile robots based on coded infrared signal transmission," Proceedings: Integrating Intelligent Instrumentation and Control, Instrumentation and Measurement Technology Conference, 1995, IMTC/95. pp. 548-551, 1995.

Eren et al., "Operation of Mobile Robots in a Structured Infrared Environment," Proceedings 'Sensing, Processing, Networking', IEEE Instrumentation and Measurement Technology Conference, 1997 (IMTC/97), Ottawa, Canada vol. 1, pp. 20-25, May 1997.

Euroflex Intelligente Monstre, (English excerpt only), 2006, 15 pages.

Euroflex, Jan. 2006, Retrieved from the Internet: URL< http://www.euroflex.tv/novita_dett.php?id=15, accessed Nov. 2011, 1 page.

EVac Robotic Vacuum S1727 Instruction Manual, Sharper Image Corp, Copyright 2004, 16 pages.

(56) **References Cited**

OTHER PUBLICATIONS

Everyday Robots, "Everyday Robots: Reviews, Discussion and News for Consumers," Aug. 2004, Retrieved from the Internet: URL< www.everydayrobots.com/index.php?option=content &task=view&id=9> (Sep. 2012), 4 pages.
Evolution Robotics, "NorthStar—Low-cost Indoor Localiztion—How it Works," E Evolution Robotics , 2 pages, 2005.
Facchinetti Claudio et al., "Self-Positioning Robot Navigation Using Ceiling Images Sequences," ACCV '95, 5 pages, Dec. 1995.
Facchinetti Claudio et al., "Using and Learning Vision-Based Self-Positioning for Autonomous Robot Navigation," ICARCV '94, vol. 3, pp. 1694-1698, 1994.
Facts on Trilobite, webpage, Retrieved from the Internet: URL< http://trilobiteelectroluxse/presskit_en/model11335asp?print=yes &pressID=>. 2 pages, accessed Dec. 2003.
Fairfield et al., "Mobile Robot Localization with Sparse Landmarks," SPIE vol. 4573, pp. 148-155, 2002.
Favre-Bulle, "Efficient tracking of 3D—Robot Position by Dynamic Triangulation," IEEE Instrumentation and Measurement Technology Conference IMTC 98 Session on Instrumentation and Measurement in Robotics, vol. 1, pp. 446-449, May 1998.
Fayman, "Exploiting Process Integration and Composition in the context of Active Vision," IEEE Transactions on Systems, Man, and Cybernetics—Part C: Application and reviews, vol. 29, No. 1, pp. 73-86, Feb. 1999.
Floorbot GE Plastics—Image, available at http://www.fuseid.com/, 1989-1990, Accessed Sep. 2012, 1 page.
Floorbotics, VR8 Floor Cleaning Robot, Product Description for Manufacturing, URL: <http://www.consensus.sem.au/SoftwareAwards/CSAarchive/CSA2004/CSAart04/FloorBot/F>. Mar. 2004, 11 pages.
Franz et al., "Biomimetric robot navigation", Robotics and Autonomous Systems, vol. 30 pp. 133-153, 2000.
Friendly Robotics, "Friendly Robotics—Friendly Vac, Robotic Vacuum Cleaner," Retrieved from the Internet: URL< www.friendlyrobotics.com/vac.htm > 5 pages, Apr. 2005.
Friendly Robotics, Retrieved from the Internet: URL<http://www.robotsandrelax.com/PDFs/RV400Manual.pdf>. 18 pages, accessed Dec. 2011.
Fuentes et al., "Mobile Robotics 1994," University of Rochester. Computer Science Department, TR 588, 44 pages, Dec. 1994.
Fukuda et al., "Navigation System based on Ceiling Landmark Recognition for Autonomous mobile robot," 1995 IEEE/RSJ International Conference on Intelligent Robots and Systems 95. 'Human Robot Interaction and Cooperative Robots', Pittsburgh, PA, pp. 1466-1471, Aug. 1995.
Gat, "Robust Low-Computation Sensor-driven Control for Task-Directed Navigation," Proc of IEEE International Conference on Robotics and Automation , Sacramento, CA pp. 2484-2489, Apr. 1991.
Gionis, "A hand-held optical surface scanner for environmental Modeling and Virtual Reality,". Virtual Reality World, 16 pages, 1996.
Goncalves et al., "A Visual Front-End for Simultaneous Localization and Mapping", Proceedings of the 2005 IEEE International Conference on Robotics and Automation, Barcelona, Spain, pp. 44-49, Apr. 2005.
Gregg et al., "Autonomous Lawn Care Applications," 2006 Florida Conference on Recent Advances in Robotics, Miami, Florida, May 25-26, 2006, Florida International University, 5 pages.
Grumet, "Robots Clean House," Popular Mechanics, Nov. 2003, 3 pages.
Hamamatsu "SI PIN Diode S5980, S5981 S5870—Multi-element photodiodes for surface mounting," Hamatsu Photonics, 2 pages, Apr. 2004.
Haralick et al. " Pose Estimation from Corresponding Point Data", *IEEE Transactions on Systems, Man, and Cybernetics*, 19(6):1426-1446, Nov. 1989.
Hausler, "About the Scaling Behaviour of Optical Range Sensors," Fringe '97, Proceedings of the 3rd International Workshop on Automatic Processing of Fringe Patterns, Bremen, Germany, pp. 147-155, Sep. 1997.
Hitachi, http://www.hitachi.co.jp/New/cnews/hi_030529_hi_030529.pdf , 8 pages, May 29, 2003.
Hitachi: News release: "The home cleaning robot of the autonomous movement type (experimental machine)," Retrieved from the Internet: URL< www.i4u.com./japanreleases/hitachirobot.htm>. 5 pages, Mar. 2005.
Hoag et al., "Navigation and Guidance in interstellar space," ACTA Astronautica, vol. 2, pp. 513-533 , Feb. 1975.
Home Robot—UBOT; Microbotusa.com, retrieved from the WWW at www.microrobotusa.com, accessed Dec. 2, 2008, 2 pages.
Huntsberger et al., "CAMPOUT: A Control Architecture for Tightly Coupled Coordination of Multirobot Systems for Planetary Surface Exploration," *IEEE Transactions on Systems, Man, and Cybernetics—Part A: Systems and Humans*, 33(5):550-559, Sep. 2003.
Iirobotics.com, "Samsung Unveils Its Multifunction Robot Vacuum," Retrieved from the Internet: URL<.www.iirobotics.com/webpages/hotstuff.php?ubre=111>. 3 pages, Mar. 2005.
InMach "Intelligent Machines," Retrieved from the Internet: URL<www.inmach.de/inside.html>. 1 page, Nov. 2008.
Innovation First, "2004 EDU Robot Controller Reference Guide," Retrieved from the Internet: URL<http://www.ifirobotics.com>. 13 pages, Mar. 2004.
IT media, Retrieved from the Internet: URL<http://www.itmedia.co.jp/news/0111/16/robofesta_m.html>. Accessed Nov. 1, 2011, 4 pages.
It's eye, Retrieved from the Internet: URL< www.hitachi.co.jp/rd/pdf/topics/hitac2003_10.pdf>. 2 pages, 2003.
Jarosiewicz et al., "Final Report—Lucid," University of Florida, Departmetn of Electrical and Computer Engineering, EEL 5666—Intelligent Machine Design Laboratory, 50 pages, Aug. 1999.
Jensfelt et al., "Active Global Localization for a mobile robot using multiple hypothesis tracking," *IEEE Transactions on Robots and Automation*, 17(5): 748-760, Oct. 2001.
Jeong et al., "An intelligent map-building system for indoor mobile robot using low cost photo sensors,"*SPIE*, vol. 6042, 6 pages, 2005.
Kahney, "Robot Vacs are in the House," Retrieved from the Internet: URL<www.wired.com/news/technology/o,1282,59237,00.html>. 6 pages, Jun. 2003.
Karcher "Karcher RoboCleaner RC 3000," Retrieved from the Internet: URL<www.robocleaner.de/english/screen3.html>. 4 pages. Dec. 2003.
Karcher RC 3000 Cleaning Robot-user manual Manufacturer: Alfred-Karcher GmbH & Co, Cleaning Systems, Alfred Karcher-Str 28-40, PO Box 160, D-71349 Winnenden, Germany, Dec. 2002, 8 pages.
Karcher RC3000 RoboCleaner,—IMAGE, Accessed at <http://www.karcher.de/versions/int/assets/video/2_4_robo_en.swf>. Accessed Sep. 2009, 1 page.
Karcher USA, RC3000 Robotic Cleaner, website: http://www.karcher-usa.com/showproducts.php?op=view prod&param1=143 &param2=&param3=, 3 pages, accessed Mar. 2005.
Karcher, "Product Manual Download Karch", available at www.karcher.com, 16 pages, 2004.
Karlsson et al, "Core Technologies for service Robotics," IEEE/RSJ International Conference on Intelligent Robots and Systems (IROS 2004), vol. 3, pp. 2979-2984, Sep. 2004.
Karlsson et al., The vSLAM Algorithm for Robust Localization and Mapping, Proceedings of the 2005 IEEE International Conference on Robotics and Automation, Barcelona, Spain, pp. 24-29, Apr. 2005.
King and Weiman, "HelpmateTM Autonomous Mobile Robots Navigation Systems," SPIE vol. 1388 Mobile Robots, pp. 190-198, 1990.
Kleinberg, The Localization Problem for Mobile Robots, Laboratory for Computer Science, Massachusetts Institute of Technology, 1994 IEEE, pp. 521-531, 1994.
Knights, et al., "Localization and Identification of Visual Landmarks," *Journal of Computing Sciences in Colleges*, 16(4):312-313, May 2001.

(56) **References Cited**

OTHER PUBLICATIONS

Kolodko et al., "Experimental System for Real-Time Motion Estimation," Proceedings of the 2003 IEEE/ASME International Conference on Advanced Intelligent Mechatronics (AIM 2003), pp. 981-986, 2003.
Komoriya et al., "Planning of Landmark Measurement for the Navigation of a Mobile Robot," Proceedings of the 1992 IEEE/RSJ International Cofnerence on Intelligent Robots and Systems, Raleigh, NC pp. 1476-1481, Jul. 1992.
KOOLVAC Robotic Vacuum Cleaner Owner's Manual, Koolatron, 2004, 13 pages.
Krotkov et al., "Digital Sextant," Downloaded from the internet at: http://www.cs.cmu.edu/~epk/ , 1 page, 1995.
Krupa et al., "Autonomous 3-D Positioning of Surgical Instruments in Robotized Laparoscopic Surgery Using Visual Servoin," *IEEE Transactions on Robotics and Automation*, 19(5):842-853, Oct. 2003.
Kuhl et al., "Self Localization in Environments using Visual Angles," VRCAI '04 Proceedings of the 2004 ACM SIGGRAPH international conference on Virtual Reality continuum and its applications in industry, pp. 472-475, 2004.
Kurs et al, Wireless Power transfer via Strongly Coupled Magnetic Resonances, Downloaded from www.sciencemag.org, Aug. 2007, 5 pages.
Kurth, "Range-Only Robot Localization and SLAM with Radio", http://www.ri.cmu.edu/pub_files/pub4/kurth_derek_2004_1/ kurth_derek_2004_1.pdf. 60 pages, May 2004, accessed Jul. 27, 2012.
Kwon et al., "Table Recognition through Range-based Candidate Generation and Vision based Candidate Evaluation," ICAR 2007, The 13th International Conference on Advanced Robotics Aug. 21-24, 2007, Jeju, Korea, pp. 918-923, 2007.
Lambrinos et al., "A mobile robot employing insect strategies for navigation," Retrieved from the Internal: URL<http://www8.cs.umu.se/kurser/TDBD17/VT04/dl/Assignment%20Papers/ lambrinos-RAS-2000.pdf>. 38 pages, Feb. 1999.
Lang et al., "Visual Measurement of Orientation Using Ceiling Features", 1994 IEEE, pp. 552-555, 1994.
Lapin, "Adaptive position estimation for an automated guided vehicle," *SPIE*, vol. 1831 Mobile Robots VII, pp. 82-94, 1992.
LaValle et al., "Robot Motion Planning in a Changing, Partially Predictable Environment," 1994 IEEE International Symposium on Intelligent Control, Columbus, OH, pp. 261-266, Aug. 1994.
Lee et al., "Development of Indoor Navigation system for Humanoid Robot Using Multi-sensors Integration", ION NTM, San Diego, CA pp. 798-805, Jan. 2007.
Lee et al., "Localization of a Mobile Robot Using the Image of a Moving Object," *IEEE Transaction on Industrial Electronics*, 50(3):612-619, Jun. 2003.
Leonard et al., "Mobile Robot Localization by tracking Geometric Beacons," *IEEE Transaction on Robotics and Automation*, 7(3):376-382, Jun. 1991.
Li et al. "Robust Statistical Methods for Securing Wireless Localization in Sensor Networks," Information Processing in Sensor Networks, 2005, Fourth International Symposium on, pp. 91-98, Apr. 2005.
Li et al., "Making a Local Map of Indoor Environments by Swiveling a Camera and a Sonar," Proceedings of the 1999 IEEE/RSJ International Conference on Intelligent Robots and Systems, pp. 954-959, 1999.
Lin et al., "Mobile Robot Navigation Using Artificial Landmarks," *Journal of robotics System*, 14(2): 93-106, 1997.
Linde, Dissertation—"On Aspects of Indoor Localization," Available at: https://eldorado.tu-dortmund.de/handle/2003/22854, University of Dortmund, 138 pages, Aug. 2006.
Lumelsky et al., "An Algorithm for Maze Searching with Azimuth Input", 1994 IEEE International Conference on Robotics and Automation, San Diego, CA vol. 1, pp. 111-116, 1994.
Luo et al., "Real-time Area-Covering Operations with Obstacle Avoidance for Cleaning Robots," IEEE, pp. 2359-2364, 2002.
Ma, Thesis—"Documentation on Northstar," California Institute of Technology, 14 pages, May 2006.
Madsen et al., "Optimal landmark selection for triangulation of robot position," Journal of Robotics and Autonomous Systems, vol. 13 pp. 277-292, 1998.
Malik et al., "Virtual Prototyping for Conceptual Design of a Tracked Mobile Robot," Electrical and Computer Engineering, Canadian Conference on, IEEE, PI. pp. 2349-2352, May 2006.
Martishevcky, "The Accuracy of point light target coordinate determination by dissectoral tracking system", SPIE vol. 2591, pp. 25-30, Oct. 23, 2005.
Maschinemarkt Würzburg 105, No. 27, pp. 3, 30, Jul. 5, 1999 (with English translation).
Matsumura Camera Online Shop: Retrieved from the Internet: URL<http://www.rakuten.co.jp/matsucame/587179/711512/>. Accessed Nov. 2011, 15 pages (with English translation).
Matsutek Enterprises Co. Ltd, "Automatic Rechargeable Vacuum Cleaner," http://matsutek.manufacturer.globalsources.com/si/6008801427181/pdtl/Home-vacuum/10 . . . , Apr. 2007, 3 pages.
McGillem et al., "Infra-red Lacation System for Navigation and Autonomous Vehicles," 1988 IEEE International Conference on Robotics and Automation, vol. 2, pp. 1236-1238, Apr. 1988.
McGillem,et al. "A Beacon Navigation Method for Autonomous Vehicles," *IEEE Transactions on Vehicular Technology*, 38(3):132-139, Aug. 1989.
McLurkin "Stupid Robot Tricks: A Behavior-based Distributed Algorithm Library for Programming Swarms of Robots," Paper submitted for requirements of BSEE at MIT, May 2004, 127 pages.
McLurkin, "The Ants: A community of Microrobots," Paper submitted for requirements of BSEE at MIT, May 1995, 60 pages.
Michelson, "Autonomous navigation," McGraw-Hill—Access Science, Encyclopedia of Science and Technology Online, 2007, 4 pages.
Miro et al., "Towards Vision Based Navigation in Large Indoor Environments," Proceedings of the IEEE/RSJ International Conference on Intelligent Robots and Systems, Beijing, China, pp. 2096-2102, Oct. 2006.
MobileMag, "Samsung Unveils High-tech Robot Vacuum Cleaner," Retrieved from the Internet: URL<http://www.mobilemag.corn/content/100/102/C2261/>. 4 pages, Mar. 2005.
Monteiro et al., "Visual Servoing for Fast Mobile Robot: Adaptive Estimation of Kinematic Parameters," Proceedings of the IECON '93., International Conference on Industrial Electronics, Maui, HI, pp. 1588-1593, Nov. 1993.
Moore et al., "A simple Map-bases Localization strategy using range measurements," *SPIE*, vol. 5804 pp. 612-620, 2005.
Morland,"Autonomous Lawnmower Control", Downloaded from the internet at: http://cns.bu.edu/~cjmorlan/robotics/lawnmower/report.pdf, 10 pages, Jul. 2002.
Munich et al., "ERSP: A Software Platform and Architecture for the Service Robotics Industry," Intelligent Robots and Systems, 2005. (IROS 2005), pp. 460-467, Aug. 2005.
Munich et al., "SIFT-ing Through Features with ViPR", IEEE Robotics & Automation Magazine, pp. 72-77, Sep. 2006.
Nam et al., "Real-Time Dynamic Visual Tracking Using PSD Sensors and extended Trapezoidal Motion Planning", Applied Intelligence 10, pp. 53-70, 1999.
Nitu et al., "Optomechatronic System for Position Detection of a Mobile Mini-Robot," *IEEE Ttransactions on Industrial Electronics*, 52(4):969-973, Aug. 2005.
On Robo, "Robot Reviews Samsung Robot Vacuum (VC-RP30W)," Retrieved from the Internet: URL <www.onrobo.com/reviews/AT_Home/vacuum_cleaners/on00vcrb30rosam/index.htm>. 2 pages, 2005.
OnRobo "Samsung Unveils Its Multifunction Robot Vacuum," Retrieved from the Internet: URL <www.onrobo.com/enews/0210/samsung_vacuum.shtml>. 3 pages, Mar. 2005.
Pages et al., "A camera-projector system for robot positioning by visual serving," Proceedings of the 2006 Conference on Computer Vision and Pattern Recognition Workshop (CVPRW06), 8 pages, Jun. 2006.

(56) **References Cited**

OTHER PUBLICATIONS

Pages et al., "Optimizing Plane-to-Plane Positioning Tasks by Image-Based Visual Servoing and Structured Light," *IEEE Transactions on Robotics*, 22(5):1000-1010, Oct. 2006.
Pages et al., "Robust decoupled visual servoing based on structured light," 2005 IEEE/RSJ, Int. Conf. on Intelligent Robots and Systems, pp. 2676-2681, 2005.
Park et al., "A Neural Network Based Real-Time Robot Tracking Controller Using Position Sensitive Detectors," IEEE World Congress on Computational Intelligence., 1994 IEEE International Conference on Neutral Networks, Orlando, Florida pp. 2754-2758, Jun.-Jul. 1994.
Park et al., "Dynamic Visual Servo Control of Robot Manipulators using Neutral Networks," *The Korean Institute Telematics and Electronics*, 29-B(10):771-779, Oct. 1992.
Paromtchik "Toward Optical Guidance of Mobile Robots," Proceedings of the Fourth World Multiconference on Systemics, Cybermetics and Informatics, Orlando, FL, USA, Jul. 23, 2000, vol. IX, pp. 44-49, available at http://emotion.inrialpes.fr/~paromt/infos/papers/paromtchik:asama:sci:2000.ps.gz, accessed Jul. 3, 2012, 6 pages.
Paromtchik et al., "Optical Guidance System for Multiple mobile Robots," Proceedings 2001 ICRA. IEEE International Conference on Robotics and Automation, vol. 3, pp. 2935-2940, May 2001.
Penna et al., "Models for Map Building and Navigation", IEEE Transactions on Systems. Man. and Cybernetics., 23(5):1276-1301, Sep.-Oct. 1993.
Pirjanian et al. "Representation and Execution of Plan Sequences for Multi-Agent Systems," Proceedings of the 2001 IEEE/RSJ International Conference on Intelligent Robots and Systems, Maui, Hawaii, pp. 2117-2123, Oct. 2001.
Pirjanian et al., "A decision-theoretic approach to fuzzy behavior coordination", 1999 IEEE International Symposium on Computational Intelligence in Robotics and Automation, 1999. CIRA '99., Monterey, CA, pp. 101-106, Nov. 1999.
Pirjanian et al., "Distributed Control for a Modular, Reconfigurable Cliff Robot," Proceedings of the 2002 IEEE International Conference on Robotics & Automation, Washington, D.C. pp. 4083-4088, May 2002.
Pirjanian et al., "Improving Task Reliability by Fusion of Redundant Homogeneous Modules Using Voting Schemes," Proceedings of the 1997 IEEE International Conference on Robotics and Automation, Albuquerque, NM, pp. 425-430, Apr. 1997.
Pirjanian et al., "Multi-Robot Target Acquisition using Multiple Objective Behavior Coordination," Proceedings of the 2000 IEEE International Conference on Robotics & Automation, San Francisco, CA, pp. 2696-2702, Apr. 2000.
Pirjanian, "Challenges for Standards for consumer Robotics," IEEE Workshop on Advanced Robotics and its Social impacts, pp. 260-264, Jun. 2005.
Pirjanian, "Reliable Reaction," Proceedings of the 1996 IEEE/SICE/RSJ International Conference on Multisensor Fusion and Integration for Intelligent Systems, pp. 158-165, 1996.
Prassler et al., "A Short History of Cleaning Robots," Autonomous Robots 9, 211-226, 2000, 16 pages.
Put Your Roomba . . . On, Automatic webpages: http://www.acomputeredge.com/roomba, 5 pages, accessed Apr. 2005.
Remazeilles et al., "Image based robot navigation in 3D environments," Proc. of *SPIE*, vol. 6052, pp. 1-14, Dec. 2005.
Rives et al., "Visual servoing based on ellipse features," *SPIE*, vol. 2056 Intelligent Robots and Computer Vision pp. 356-367, 1993.
Roboking—not just a vacuum cleaner, a robot!, Jan. 21, 2004, infocom.uz/2004/01/21/robokingne-prosto-pyilesos-a-robot/, accessed Oct. 10, 2011, 5 pages.
RoboMaid Sweeps Your Floors So You Won't Have to, the Official Site, website: Retrieved from the Internet: URL<http://therobomaid.com>. 2 pages, accessed Mar. 2005.
Robot Buying Guide, "LG announces the first robotic vacuum cleaner for Korea," Retrieved from the Internet: URL<http://robotbg.com/news/2003/04/22/lg_announces_the_first_robotic_vacu>. 1 page, Apr. 2003.
Robotics World, "A Clean Sweep," 5 pages, Jan. 2001.
Ronnback, "On Methods for Assistive Mobile Robots," Retrieved from the Internet: URL<http://www.openthesis.org/documents/methods-assistive-mobile-robots-595019.html>. 218 pages, Jan. 2006.
Roth-Tabak et al., "Environment Model for mobile Robots Indoor Navigation," *SPIE*, vol. 1388 Mobile Robots, pp. 453-463, 1990.
Sahin et al., "Development of a Visual Object Localization Module for Mobile Robots," 1999 Third European Workshop on Advanced Mobile Robots, (Eurobot '99), pp. 65-72, 1999.
Salomon et al., "Low-Cost Optical Indoor Localization system for Mobile Objects without Image Processing," IEEE Conference on Emerging Technologies and Factory Automation, 2006. (ETFA '06), pp. 629-632, Sep. 2006.
Sato, "Range Imaging Based on Moving Pattern Light and Spatio-Temporal Matched Filter," Proceedings International Conference on Image Processing, vol. 1., Lausanne, Switzerland, pp. 33-36, Sep. 1996.
Schenker et al., "Lightweight rovers for Mars science exploration and sample return," Intelligent Robots and Computer Vision XVI, *SPIE* Proc. 3208, pp. 24-36, 1997.
Schlemmer, "Electrolux Trilobite Robotic Vacuum," Retrieved from the Internet: URL< www.hammacher.com/publish/71579.asp?promo=xsells>. 3 pages, Mar. 2005.
Schofield, "Neither Master Nor slave—A Practical Study in the Development and Employment of Cleaning Robots, Emerging Technologies and Factory Automation," 1999 Proceedings ETFA '99 1999 7th IEEE International Conference on Barcelona, Spain, pp. 1427-1434, Oct. 1999.
Shimoga et al., "Touch and Force Reflection for Telepresence Surgery," Engineering in Medicine and Biology Society, 1994. Engineering Advances: New Opportunities for Biomedical Engineers. Proceedings of the 16th Annual International Conference of the IEEE, Baltimore, MD, pp. 1049-1050, 1994.
Sim et al, "Learning Visual Landmarks for Pose Estimation," IEEE International Conference on Robotics and Automation, vol. 3, Detroit, MI, pp. 1972-1978, May 1999.
Sobh et al., "Case Studies in Web-Controlled Devices and Remote Manipulation," Automation Congress, 2002 Proceedings of the 5th Biannual World, pp. 435-440, Dec. 2002.
Special Reports, "Vacuum Cleaner Robot Operated in Conjunction with 3G Celluar Phone," 59(9): 3 pages, Retrieved from the Internet: URL<http://www.toshiba.co.jp/tech/review/2004/09/59_0>. 2004.
Stella et al., "Self-Location for Indoor Navigation of Autonomous Vehicles," Part of the SPIE conference on Enhanced and Synthetic Vision SPIE vol. 3364, pp. 298-302, 1998.
Summet, "Tracking Locations of Moving Hand-held Displays Using Projected Light," Pervasive 2005, LNCS 3468, pp. 37-46, 2005.
Svedman et al., "Structure from Stereo Vision using Unsynchronized Cameras for Simultaneous Localization and Mapping," 2005 IEEE/RSJ International Conference on Intelligent Robots and Systems, pp. 2993-2998, 2005.
Svet Computers—New Technologies—Robot Vacuum Cleaner, Oct. 1999, available at http://www.sk.rs/1999/10/sknt01.html, 1 page, accessed Nov. 1, 2011.
Taipei Times, "Robotic vacuum by Matsuhita about to undergo testing," Retrieved from the Internet: URL<http://www.taipeitimes.com/News/worldbiz/archives/2002/03/26/0000129338>. accessed Mar. 2002, 2 pages.
Takio et al., "Real-Time Position and Pose Tracking Method of Moving Object Using Visual Servo System," 47th IEEE International Symposium on Circuits and Systems, pp. 167-170, 2004.
Tech-on!, Retrieved from the Internet: URL<http://techon.nikkeibp.co.jp/members/01db/200203/1006501/>. 4 pages, accessed Nov. 2011.
Teller, "Pervasive pose awareness for people, Objects and Robots," http://www.ai.mitedu/lab/dangerous-ideas/Spring2003/teller-pose.pdf, 6 pages, Apr. 2003.

(56) **References Cited**

OTHER PUBLICATIONS

Terada et al., "An Acquisition of the Relation between Vision and Action using Self-Organizing Map and Reinforcement Learning," 1998 Second International Conference on Knowledge-Based Intelligent Electronic Systems, Adelaide, Australia, pp. 429-434, Apr. 1998.
The Sharper Image, eVac Robotic Vacuum—Product Details, www.sharperiamge.com/us/en/templates/products/pipmorework1printable.jhtml, 1 page, Accessed Mar. 2005.
TheRobotStore.com, "Friendly Robotics Robotic Vacuum RV400—The Robot Store," www.therobotstore.com/s.nl/sc.9/category.-109/it.A/id.43/.f, 1 page, Apr. 2005.
Thrun, Sebastian, "Learning Occupancy Grid Maps With Forward Sensor Models," Autonomous Robots 15, 28 pages, Sep. 1, 2003.
TotalVac.com, RC3000 RoboCleaner website, 2004, Accessed at http://ww.totalvac.com/robot_vacuum.htm (Mar. 2005), 3 pages.
Trebi-Ollennu et al., "Mars Rover Pair Cooperatively Transporting a Long Payload," Proceedings of the 2002 IEEE International Conference on Robotics & Automation, Washington, D.C. pp. 3136-3141, May 2002.
Tribelhorn et al., "Evaluating the Roomba: a low-cost, ubiquitous platform for robotics research and education," *IEEE*, pp. 1393-1399, 2007.
Tse et al., "Design of a Navigation System for a Household Mobile Robot Using Neural Networks," Department of Manufacturing Engg. & Engg. Management, City University of Hong Kong, pp. 2151-2156, 1998.
UAMA (Asia) Industrial Co., Ltd., "RobotFamily," 2005, 1 page.
UBOT, cleaning robot capable of wiping with a wet duster, Retrieved from the Internet: URL<http://us.aving.net/news/view.php?articleId=23031>. 4 pages, accessed Nov. 2011.
Watanabe et al., "Position Estimation of Mobile Robots With Internal and External Sensors Using Uncertainty Evolution Technique," 1990 IEEE International Conference on Robotics and Automation, Cincinnati, OH, pp. 2011-2016, May 1990.
Watts, "Robot, boldly goes where no man can," The Times—pp. 20, Jan. 1985.
Wijk et al., "Triangulation-Based Fusion of Sonar Data with Application in Robot Pose Tracking," *IEEE Transactions on Robotics and Automation*, 16(6):740-752, Dec. 2000.
Wolf et al., "Robust Vision-Based Localization by Combining an Image-Retrieval System with Monte Carol Localization,", *IEEE Transactions on Robotics*, 21(2):208-216, Apr. 2005.
Wolf et al., "Robust Vision-based Localization for Mobile Robots Using an Image Retrieval System Based on Invariant Features," Proceedings of the 2002 IEEE International Conference on Robotics & Automation, Washington, D.C., pp. 359-365, May 2002.
Wong, "EIED Online>> Robot Business", ED Online ID# 13114, 17 pages, Jul. 2006.
Yamamoto et al., "Optical Sensing for Robot Perception and Localization," 2005 IEEE Workshop on Advanced Robotics and its Social Impacts, pp. 14-17, 2005.
Yata et al., "Wall Following Using Angle Information Measured by a Single Ultrasonic Transducer," Proceedings of the 1998 IEEE, International Conference on Robotics & Automation, Leuven, Belgium, pp. 1590-1596, May 1998.
Yujin Robotics,"An intelligent cleaning robot," Retrieved from the Internet: URL<http://us.aving.net/news/view.php?articleId=7257>. 8 pages, accessed Nov. 2011.
Yun et al., "Image-Based Absolute Positioning System for Mobile Robot Navigation," IAPR International Workshops SSPR, Hong Kong, pp. 261-269, Aug. 2006.
Yun et al., "Robust Positioning a Mobile Robot with Active Beacon Sensors," *Lecture Notes in Computer Science*, 2006, vol. 4251, pp. 890-897, 2006.
Yuta et al., "Implementation of an Active Optical Range sensor Using Laser Slit for In-Door Intelligent Mobile Robot," IEE/RSJ International Workshop on Intelligent Robots and Systems (IROS 91) vol. 1, Osaka, Japan, pp. 415-420, Nov. 3-5, 1991.
Zha et al., "Mobile Robot Localization Using Incomplete Maps for Change Detection in a Dynamic Environment," Advanced Intelligent Mechatronics '97. Final Program and Abstracts., IEEE/ASME International Conference, pp. 110, Jun. 1997.
Zhang et al., "A Novel Mobile Robot Localization Based on Vision," *SPIE* vol. 6279, 6 pages, Jan. 2007.
Zoombot Remote Controlled Vaccuum-RV-500 New Roomba 2, website: http://cgi.ebay.com/ws/eBayISAPI.dll?ViewItem&category=43526&item=4373497618&rd=1, accessed Apr. 20, 2005, 7 pages.
Written Opinion of the International Searching Authority, PCT/US2004/001504, dated Aug. 20, 2012, 9 pages.
International Search Report and Written Opinion, PCT/US2010/043922, dated Aug. 30, 2011.
International Preliminary Report on Patentability in International Application No. PCT/US2010/043922, dated Jan. 31, 2012, 10 pages.

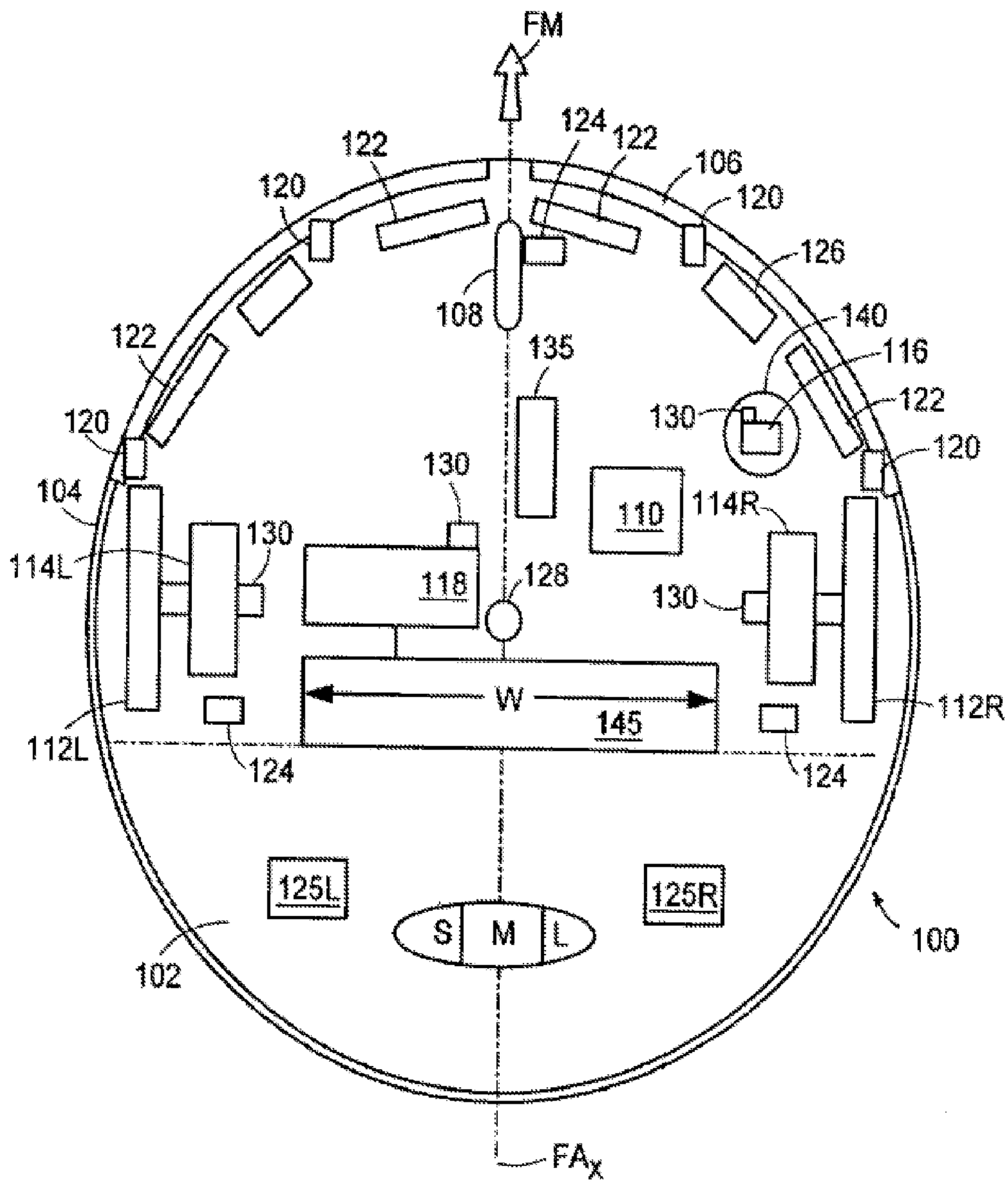
FM
124
122
122
106
120
120
126
108
140
135
116
122
130
122
120
120
130
104
110
114R
114L
130
118
128
130
W
145
112R
112L
124
124
125L
125R
S
M
L
100
102
FA$_X$

FIG. 1

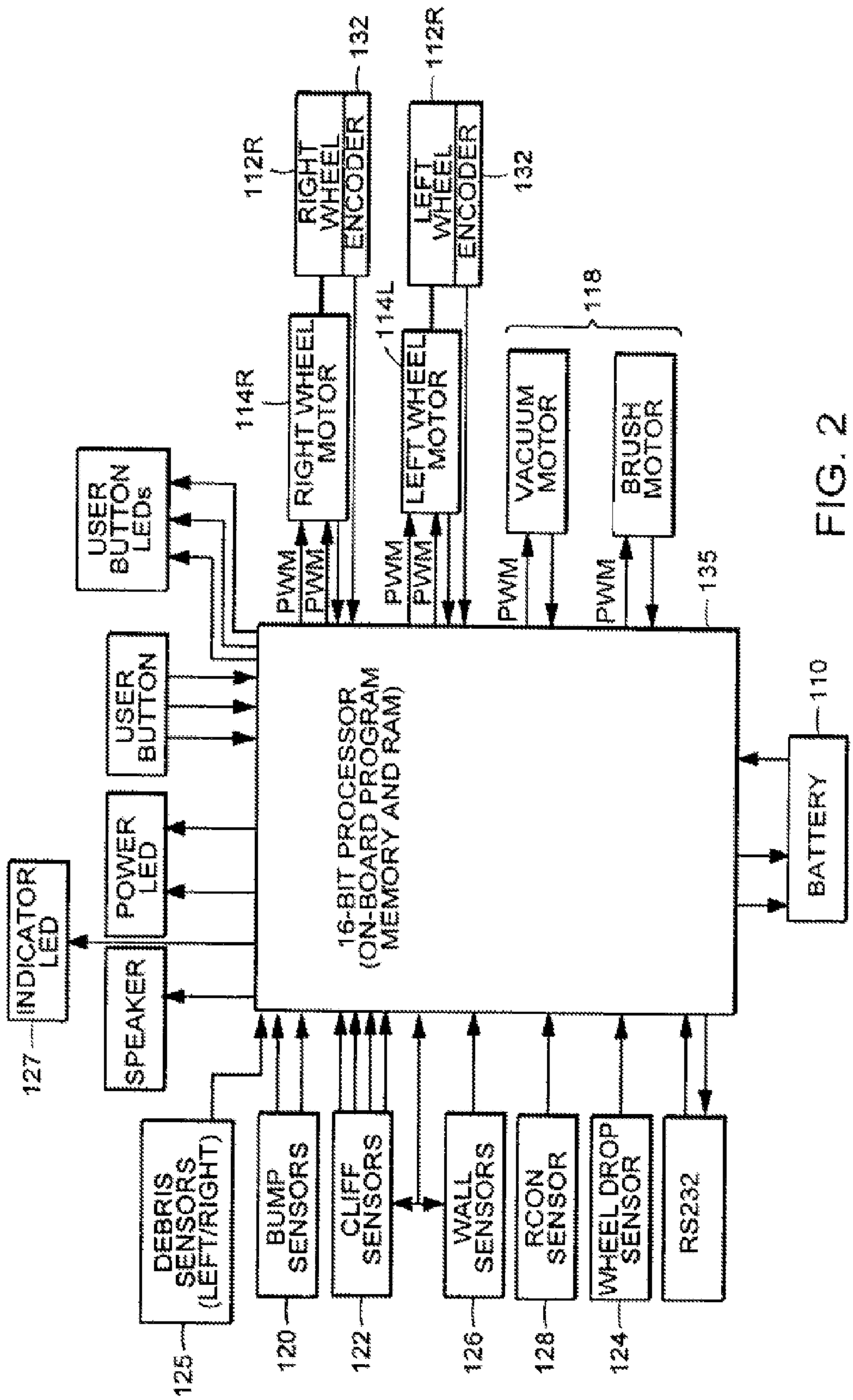
RIGHT WHEEL ENCODER
LEFT WHEEL ENCODER
112R
132
112R
132
RIGHT WHEEL MOTOR
LEFT WHEEL MOTOR
114R
114L
VACUUM MOTOR
BRUSH MOTOR
118
USER BUTTON LEDs
PWM
PWM
PWM
PWM
PWM
PWM
135
USER BUTTON
16-BIT PROCESSOR (ON-BOARD PROGRAM MEMORY AND RAM)
BATTERY
110
POWER LED
INDICATOR LED
127
SPEAKER
DEBRIS SENSORS (LEFT/RIGHT)
BUMP SENSORS
CLIFF SENSORS
WALL SENSORS
RCON SENSOR
WHEEL DROP SENSOR
RS232
125
120
122
126
128
124

FIG. 2

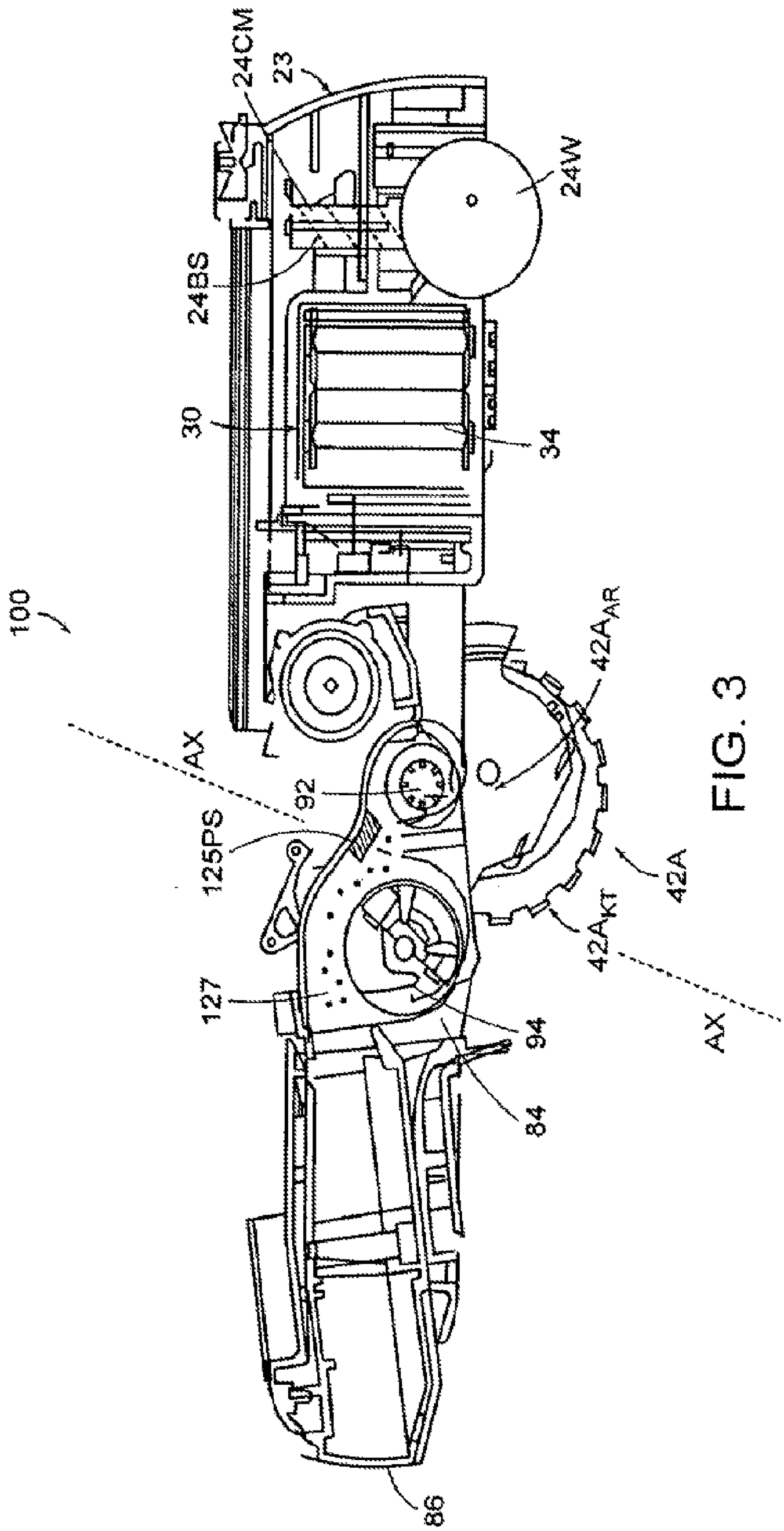
100
24CM
23
24W
24BS
30
34
42A_AR
AX
92
125PS
42A
42A_KT
127
94
AX
84
86

FIG. 3

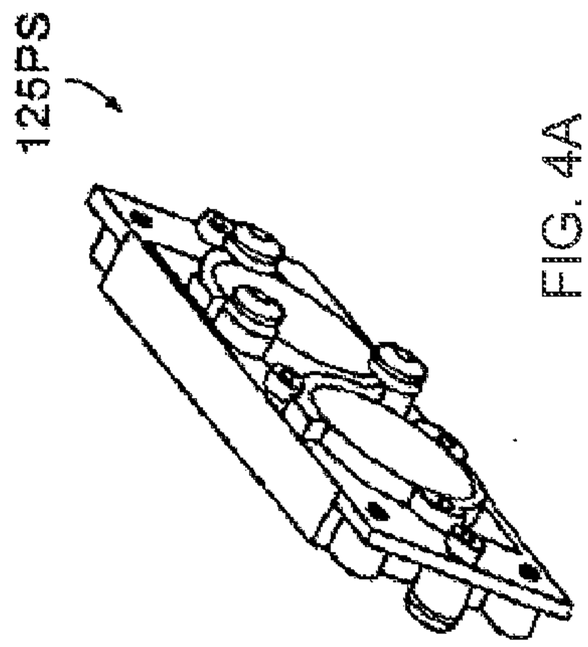

FIG. 4A

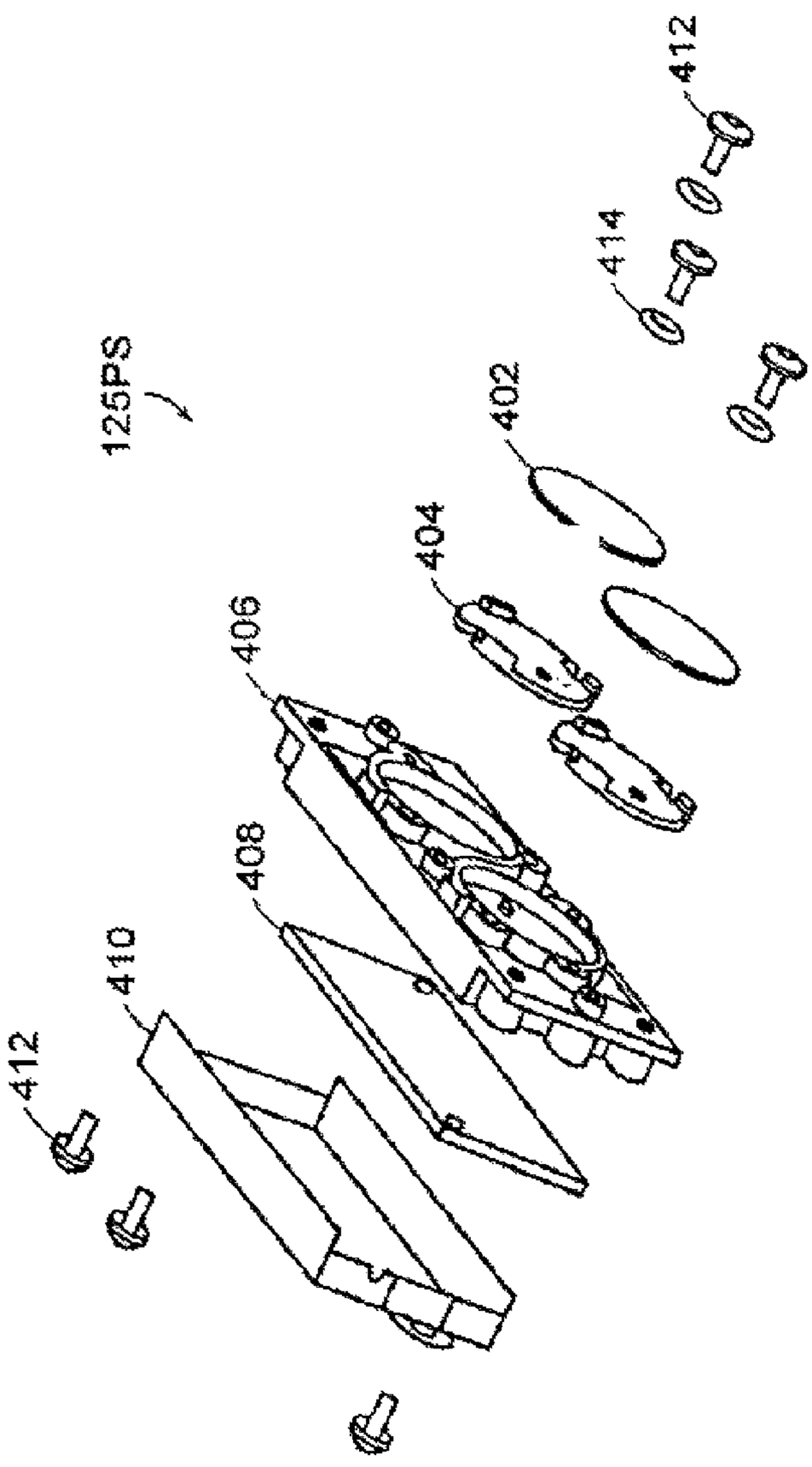

FIG. 4B

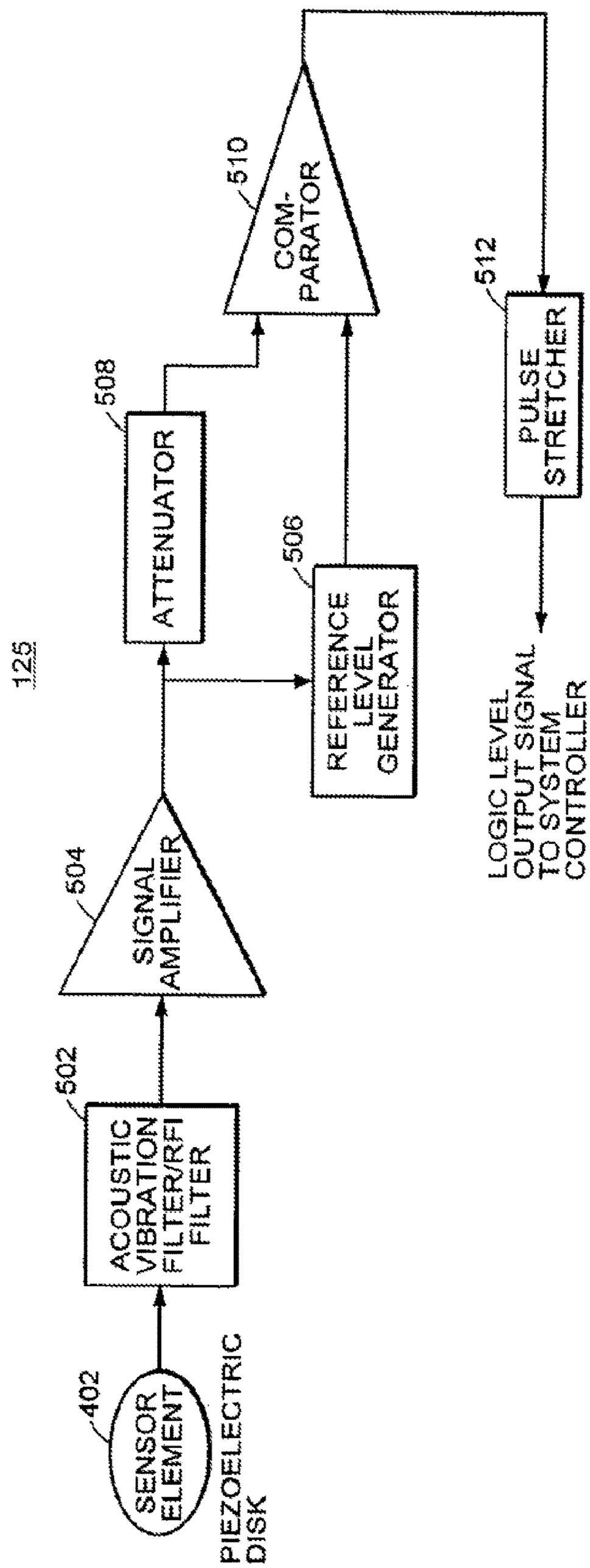
125
402
SENSOR ELEMENT
PIEZOELECTRIC DISK
502
ACOUSTIC VIBRATION FILTER/RFI FILTER
504
SIGNAL AMPLIFIER
508
ATTENUATOR
506
REFERENCE LEVEL GENERATOR
510
COM-PARATOR
512
PULSE STRETCHER
LOGIC LEVEL OUTPUT SIGNAL TO SYSTEM CONTROLLER

FIG. 5

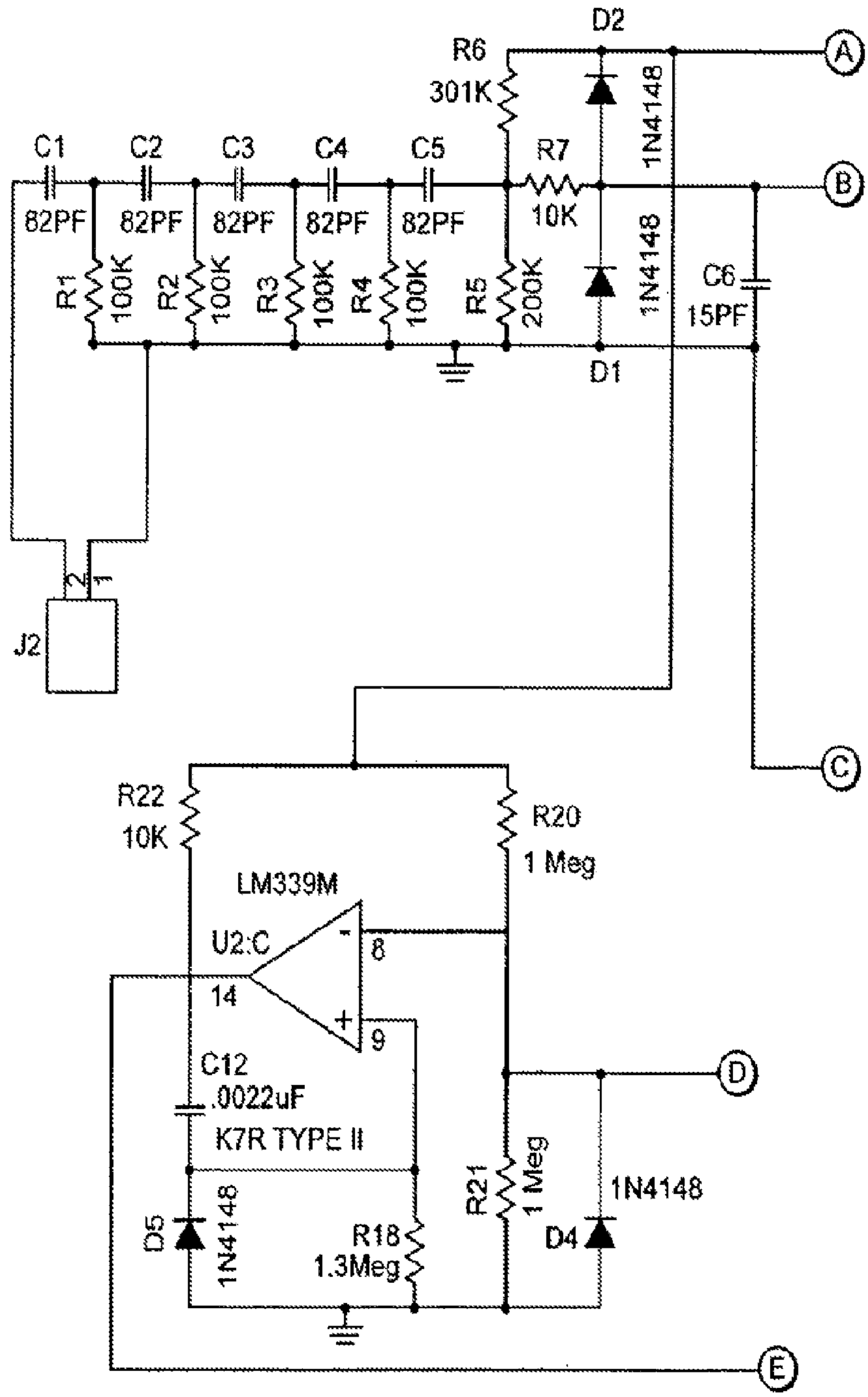
D2
R6
301K
1N4148
A
C1
C2
C3
C4
C5
R7
B
82PF
82PF
82PF
82PF
82PF
10K
1N4148
R1
100K
R2
100K
R3
100K
R4
100K
R5
200K
C6
15PF
D1
2
1
J2
C
R22
10K
R20
1 Meg
LM339M
U2:C
8
14
9
C12
.0022uF
K7R TYPE II
D
R21
1 Meg
1N4148
D5
1N4148
R18
1.3Meg
D4
E

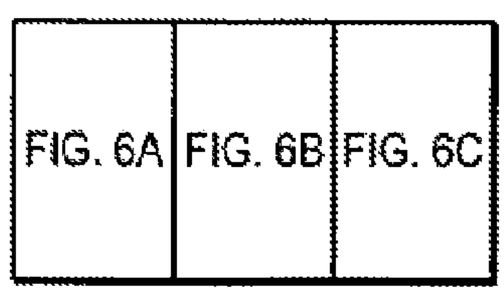
FIG. 6A
FIG. 6B
FIG. 6C

FIG. 6

FIG. 6A

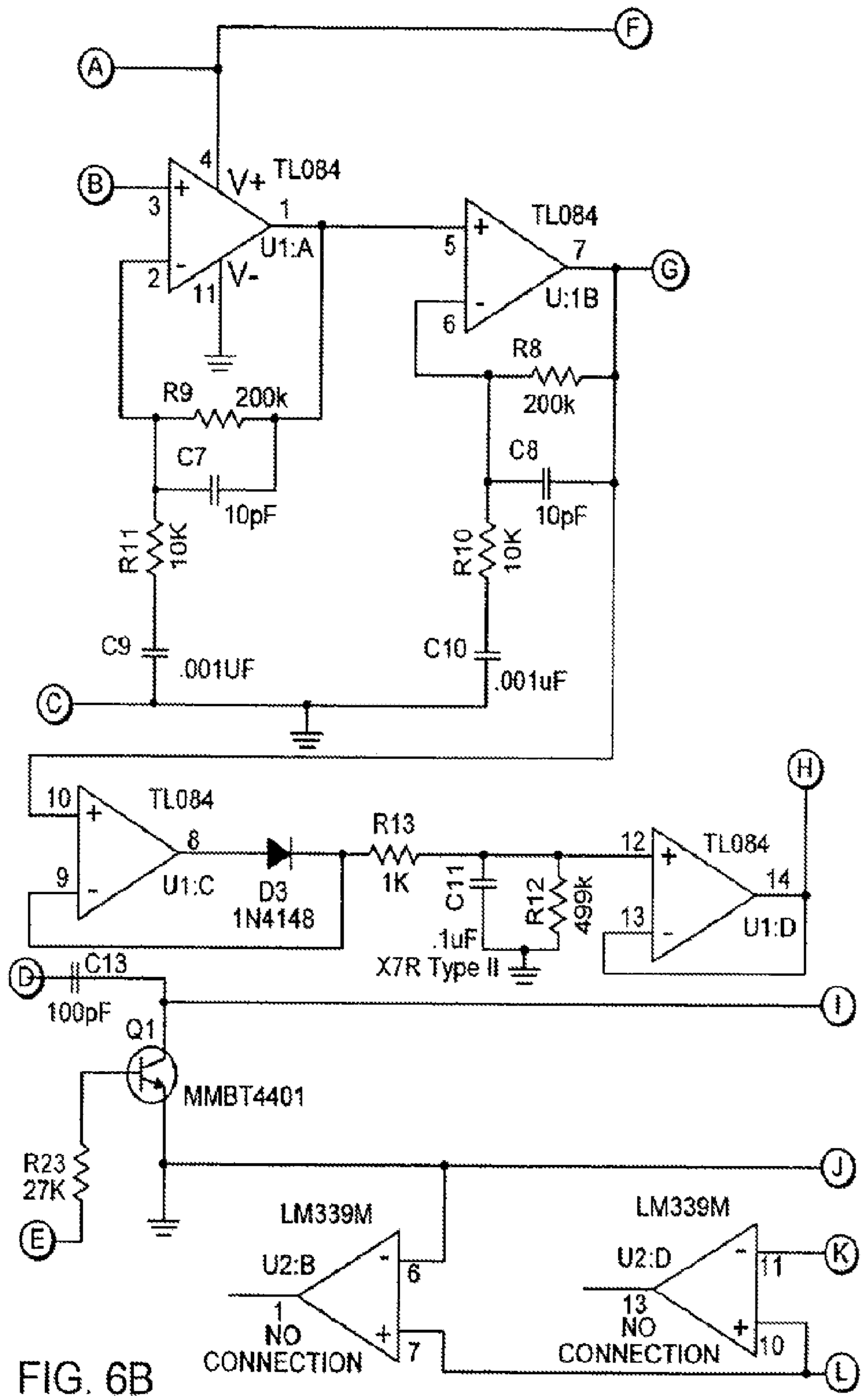
A
B
C
D
E
F
G
H
I
J
K
L
TL084
V+
V-
U1:A
U:1B
U1:C
U1:D
R9
200k
C7
10pF
R11
10K
C9
.001UF
R8
200k
C8
10pF
R10
10K
C10
.001uF
R13
1K
C11
.1uF
X7R Type II
R12
499k
C13
100pF
Q1
MMBT4401
R23
27K
LM339M
U2:B
U2:D
NO
CONNECTION

FIG. 6B

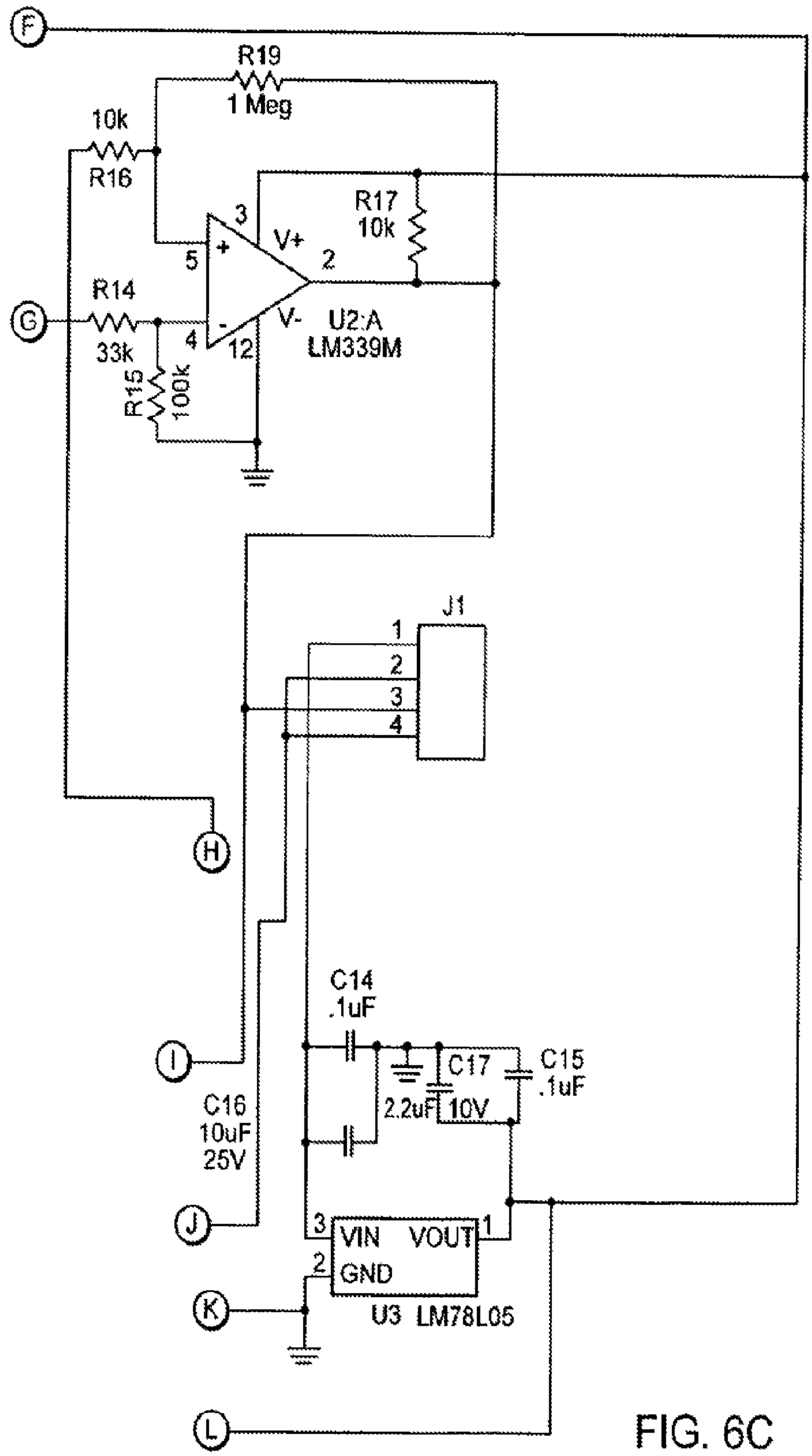
F
R19
1 Meg
10k
R16
R17
10k
3
V+
2
5
+
R14
G
33k
4
-
12
V-
U2:A
LM339M
R15
100k
J1
1
2
3
4
H
C14
.1uF
I
C17
C15
.1uF
2.2uF
10V
C16
10uF
25V
J
3
VIN
VOUT
1
2
GND
K
U3 LM78L05
L

FIG. 6C

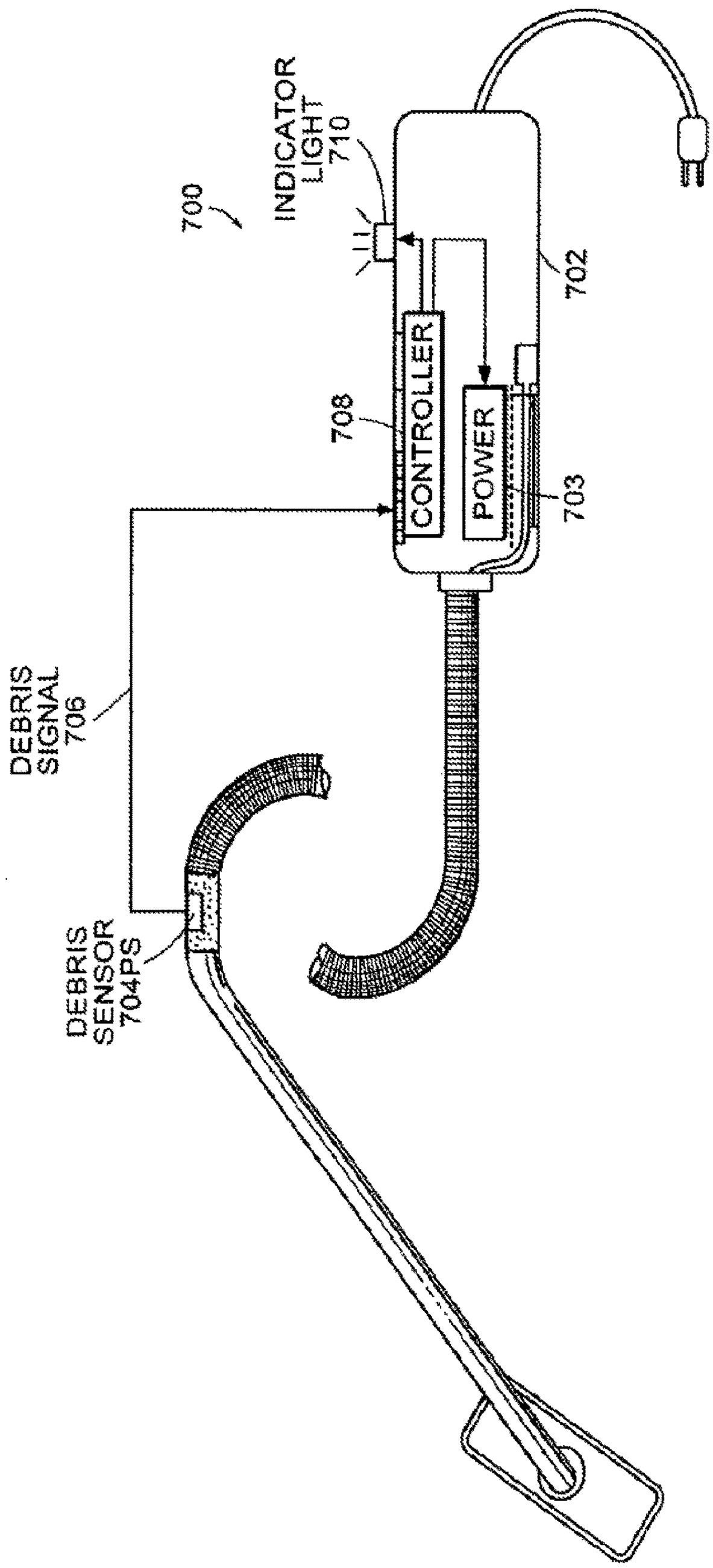
700
INDICATOR LIGHT 710
702
CONTROLLER
POWER
708
703
DEBRIS SIGNAL 706
DEBRIS SENSOR 704PS

FIG. 7

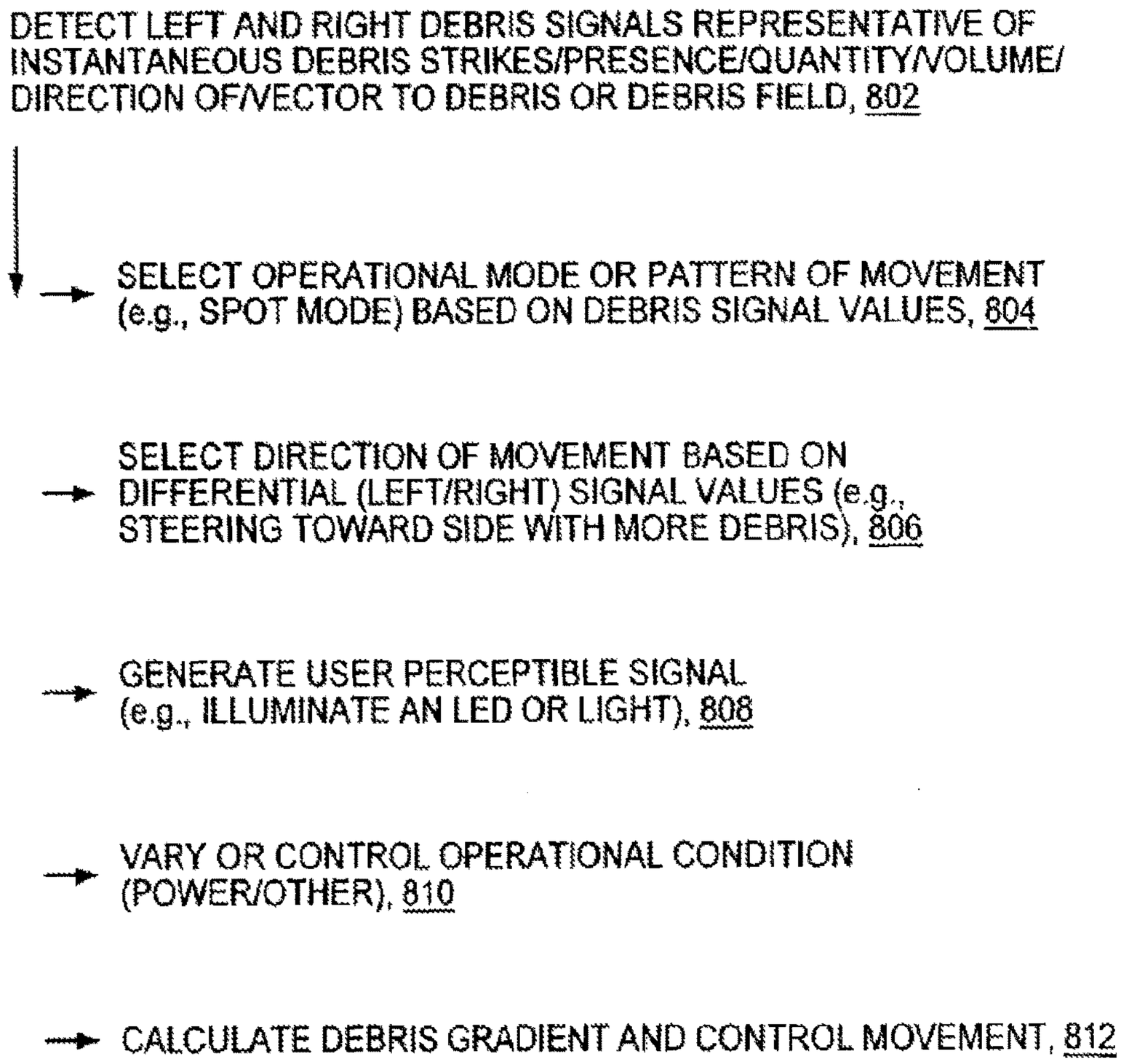
DETECT LEFT AND RIGHT DEBRIS SIGNALS REPRESENTATIVE OF INSTANTANEOUS DEBRIS STRIKES/PRESENCE/QUANTITY/VOLUME/ DIRECTION OF/VECTOR TO DEBRIS OR DEBRIS FIELD, 802
SELECT OPERATIONAL MODE OR PATTERN OF MOVEMENT (e.g., SPOT MODE) BASED ON DEBRIS SIGNAL VALUES, 804
SELECT DIRECTION OF MOVEMENT BASED ON DIFFERENTIAL (LEFT/RIGHT) SIGNAL VALUES (e.g., STEERING TOWARD SIDE WITH MORE DEBRIS), 806
GENERATE USER PERCEPTIBLE SIGNAL (e.g., ILLUMINATE AN LED OR LIGHT), 808
VARY OR CONTROL OPERATIONAL CONDITION (POWER/OTHER), 810
CALCULATE DEBRIS GRADIENT AND CONTROL MOVEMENT, 812

FIG. 8

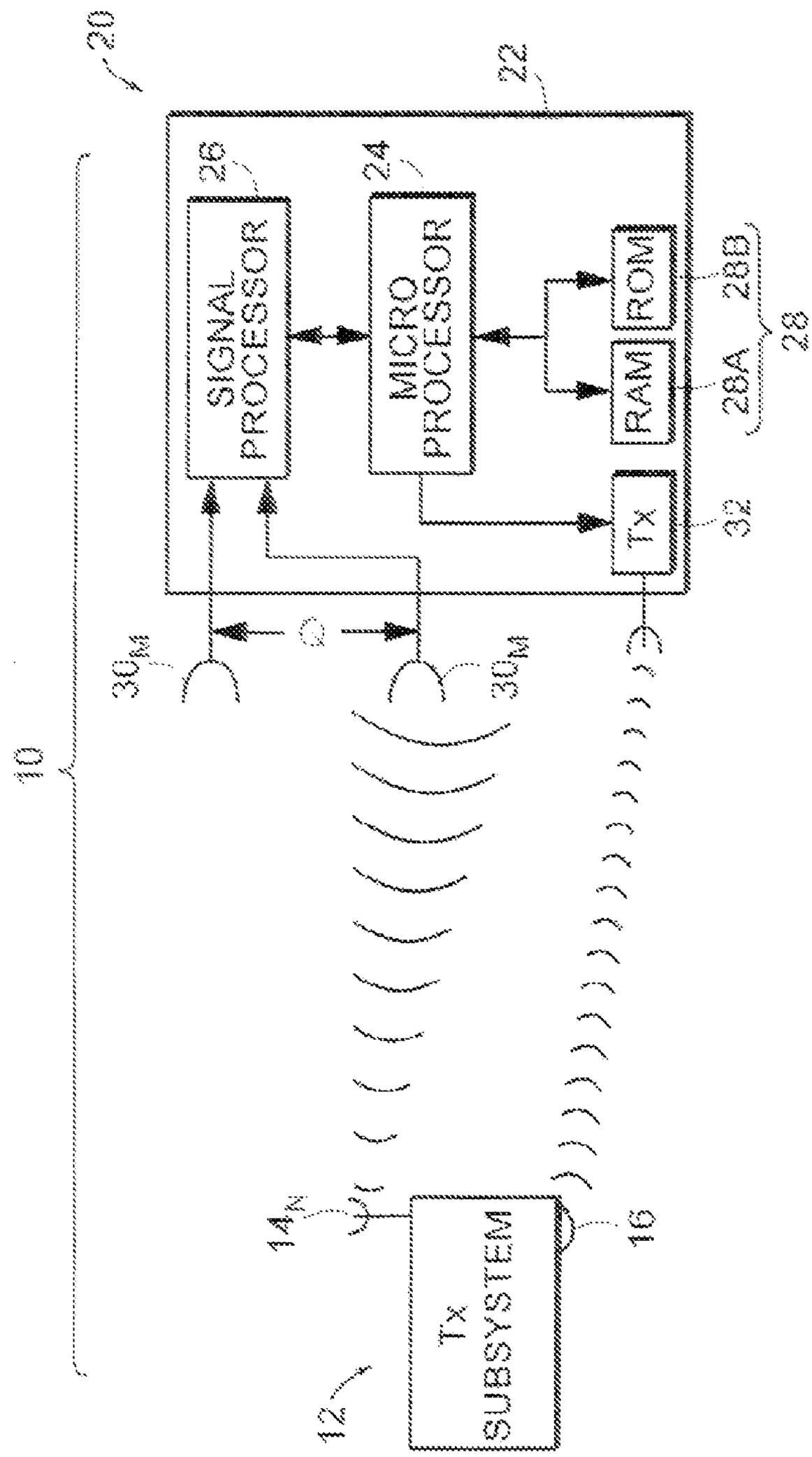
20
22
26
SIGNAL PROCESSOR
24
MICRO PROCESSOR
ROM
28B
RAM
28A
28
Tx
32
30_M
Q
30_M
10
14_N
Tx SUBSYSTEM
16
12

FIG. 9

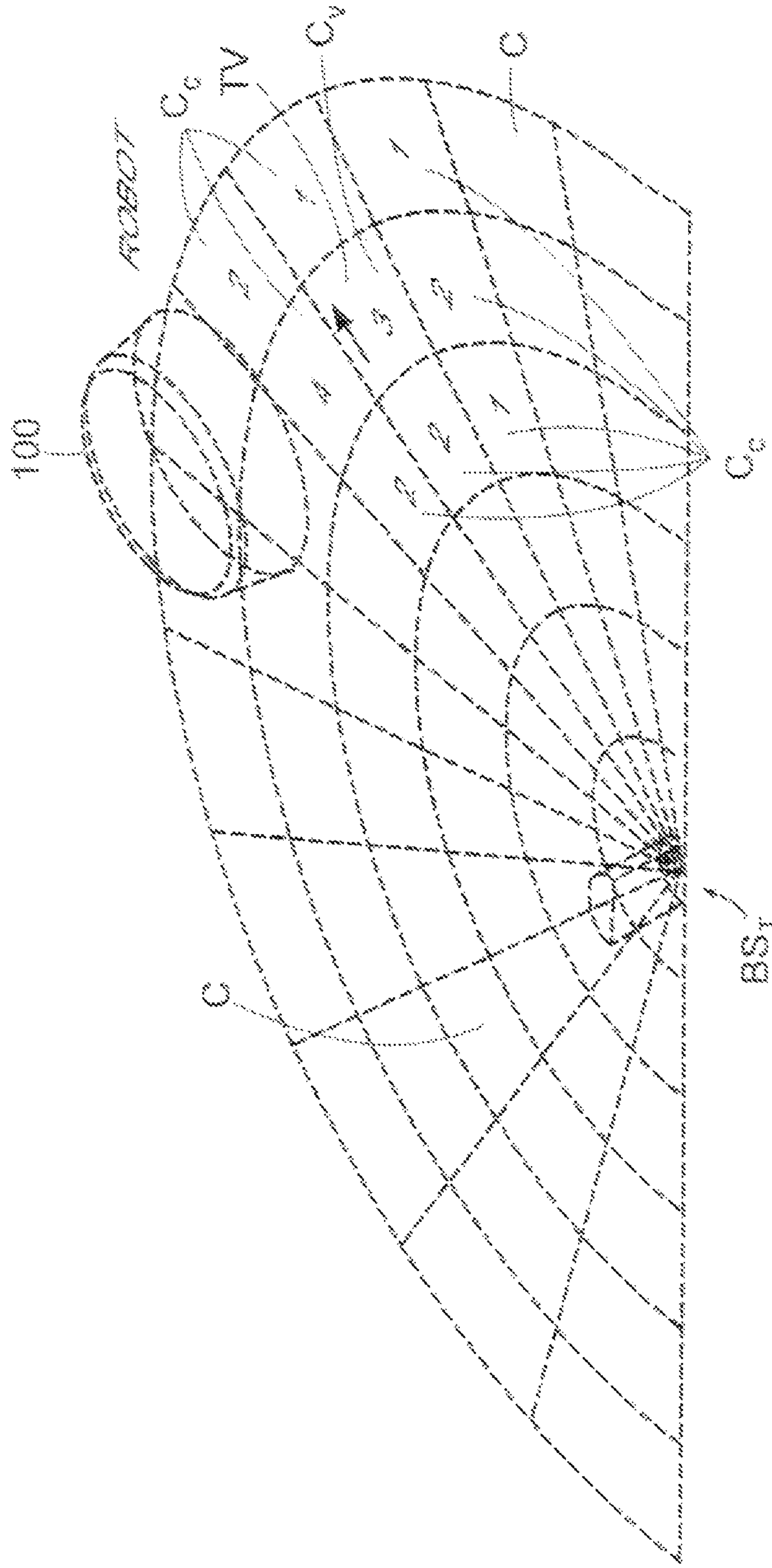

FIG. 10

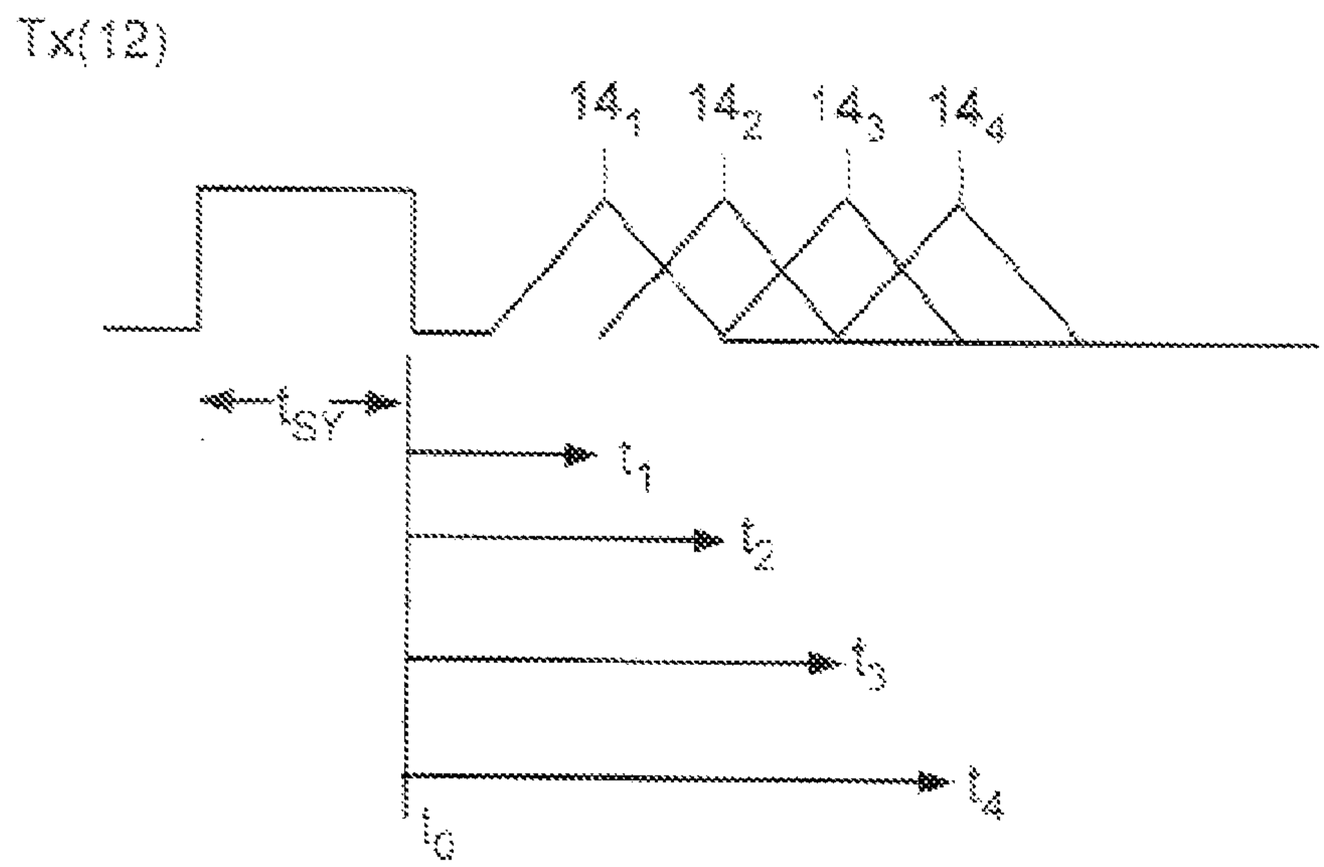

FIG. 11A

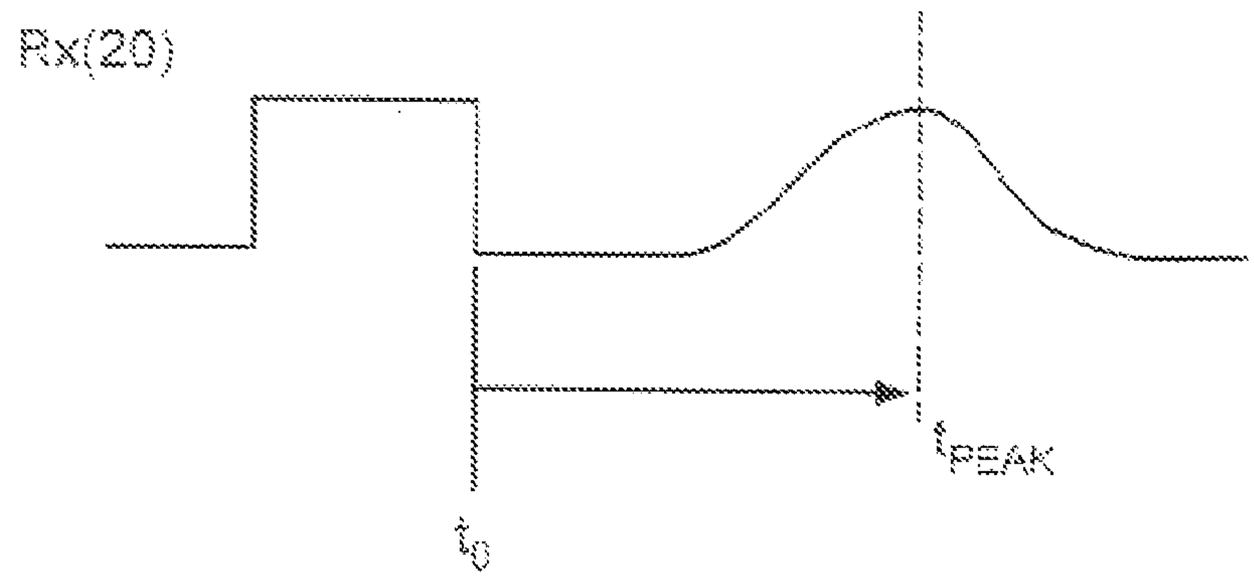

FIG. 11B

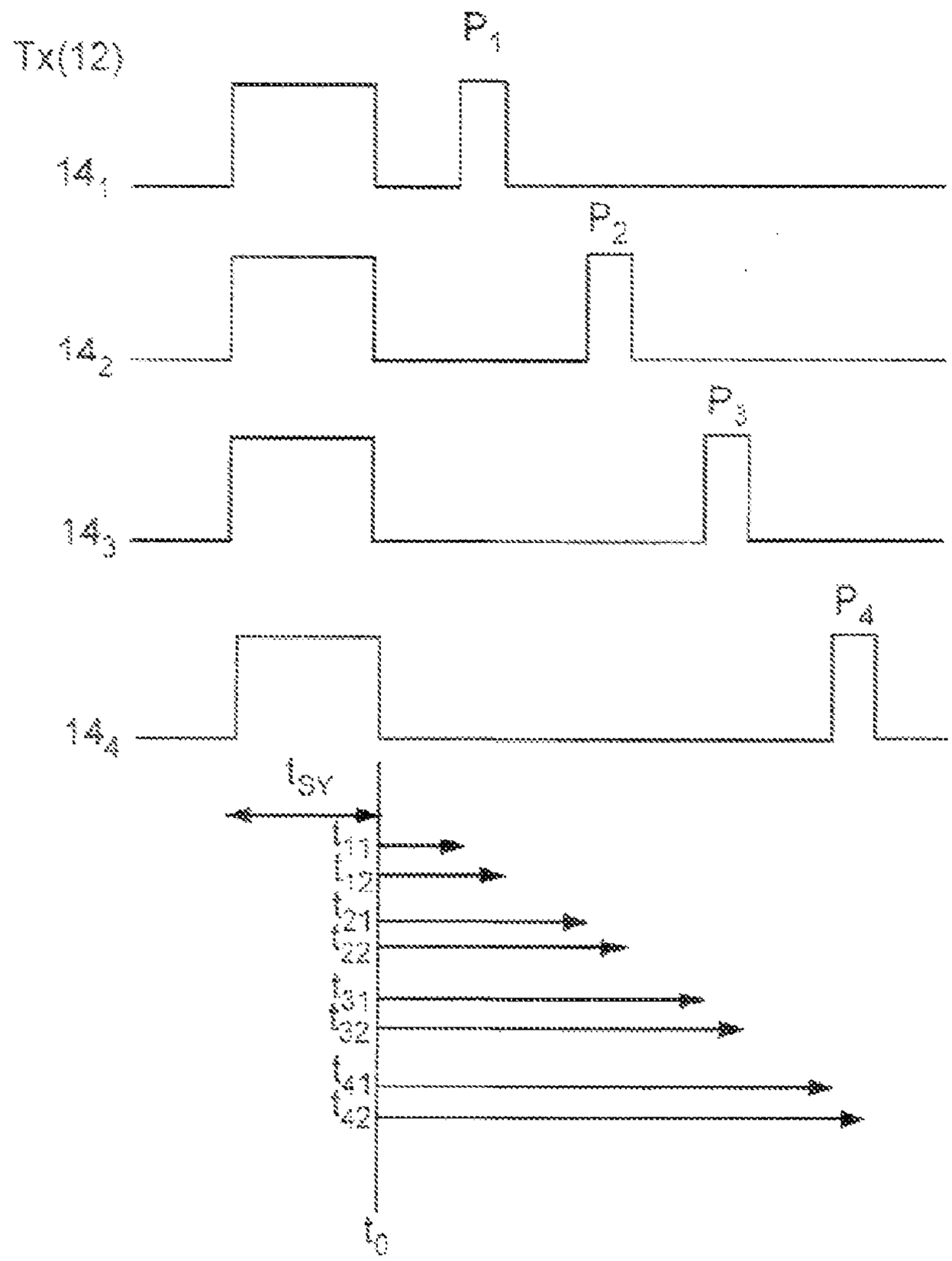

FIG. 11C

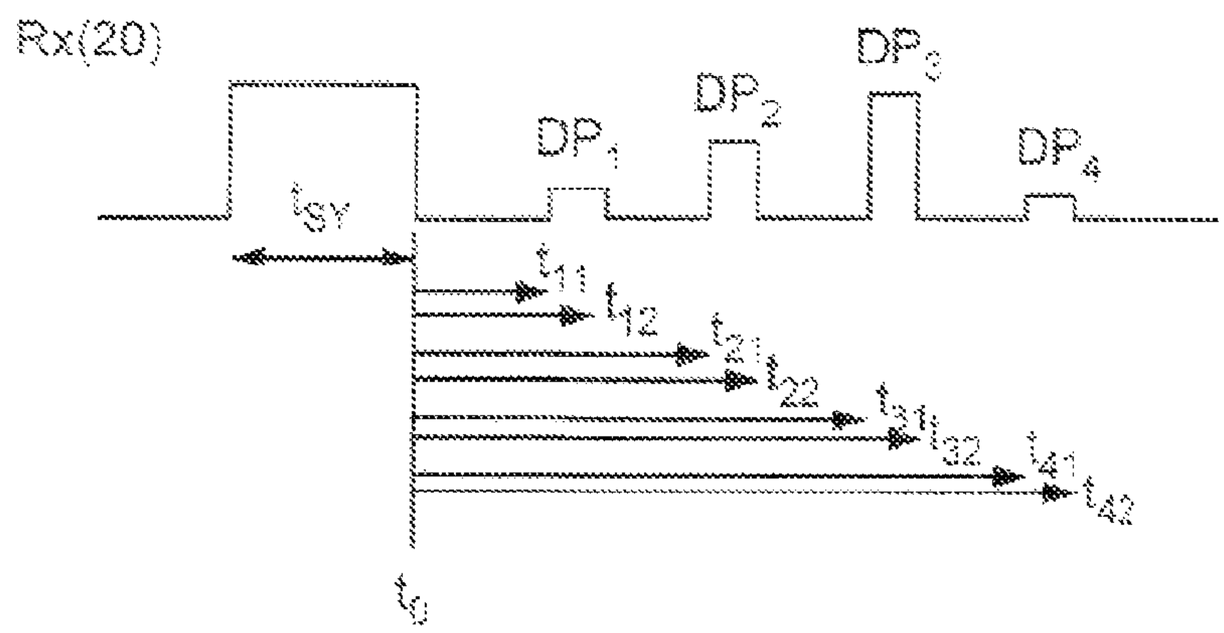

FIG. 11D

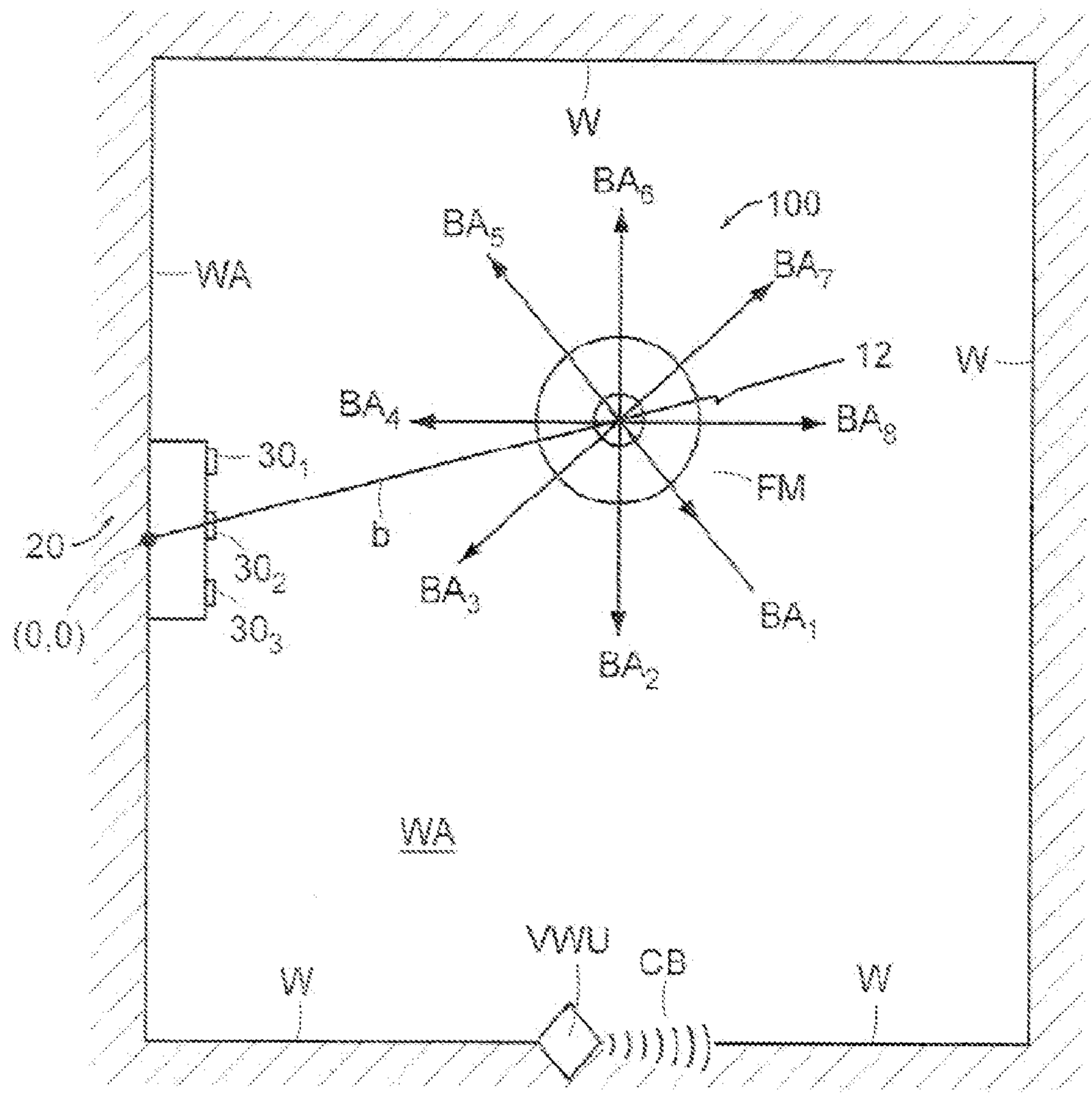
W
BA6
100
BA5
BA7
WA
12
W
BA4
BA8
30₁
FM
20
b
30₂
BA3
BA1
(0,0)
30₃
BA2
WA
WU
CB
W
W

FIG. 12A

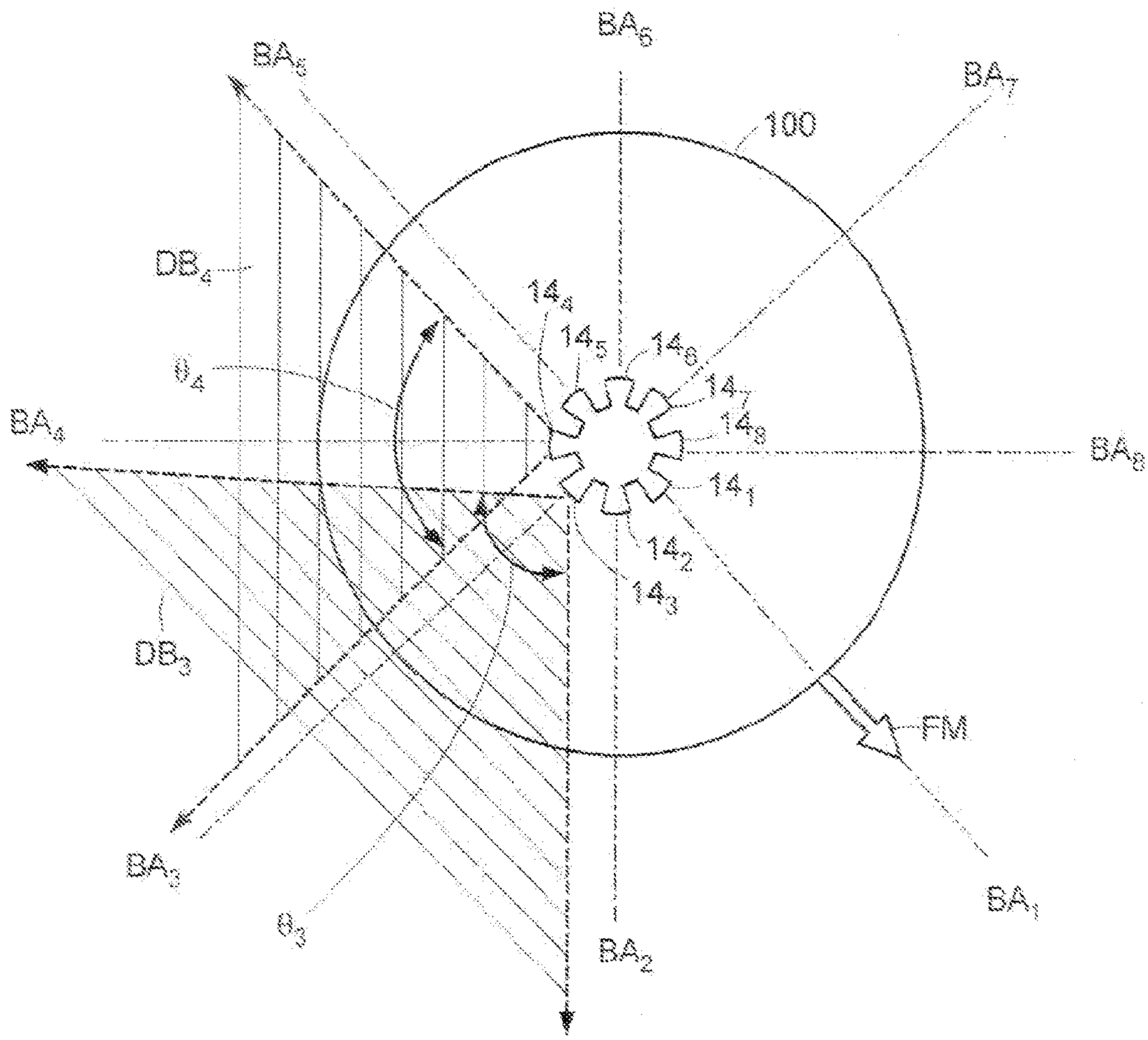
BA6
BA8
BA7
100
DB4
14 4
14 5
14 6
14 7
14 8
θ4
BA4
BA5
14 1
14 2
14 3
DB3
FM
BA3
BA1
θ3
BA2

FIG. 12B

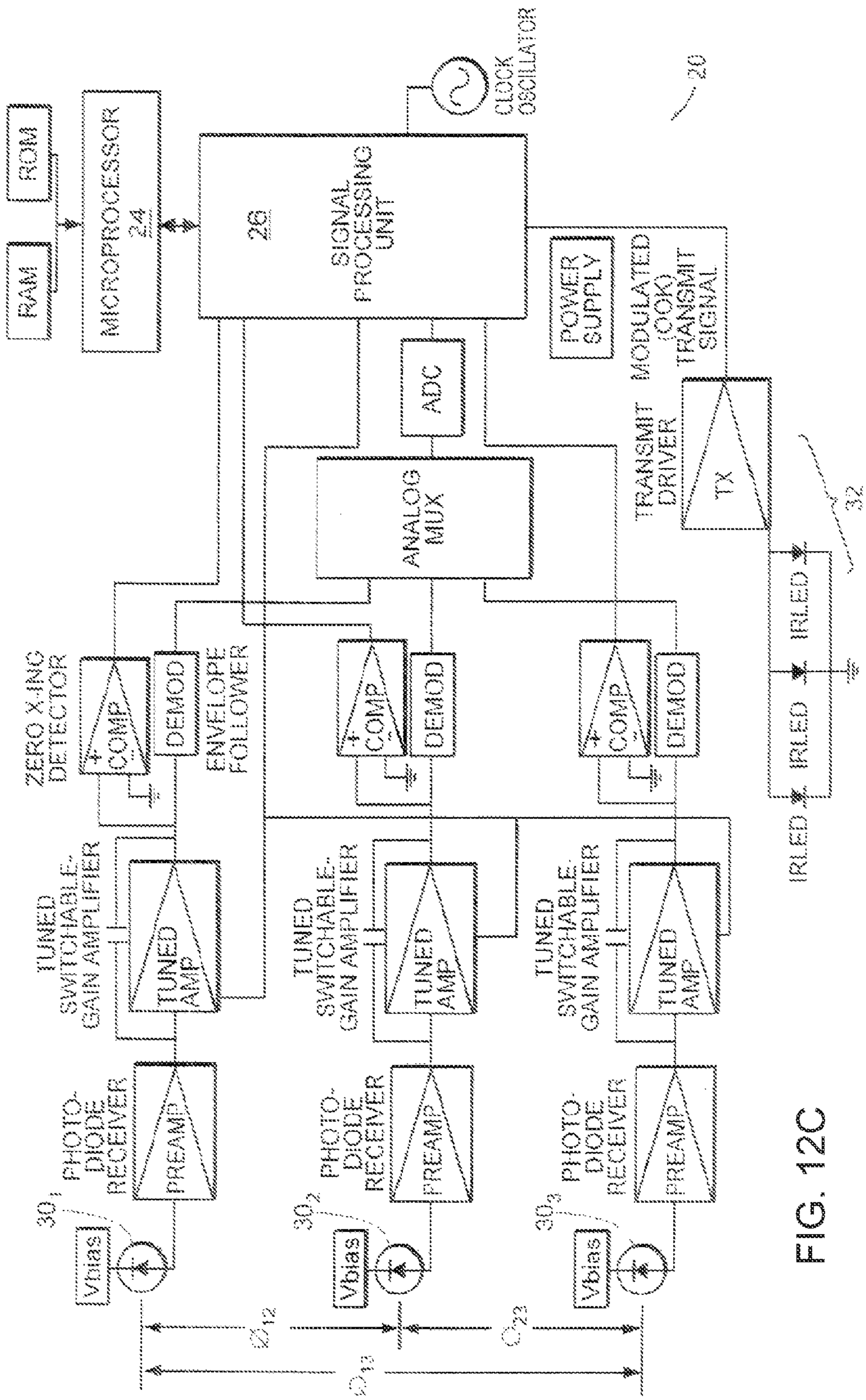
RAM
ROM
MICROPROCESSOR
24
26
SIGNAL PROCESSING UNIT
CLOCK OSCILLATOR
20
POWER SUPPLY
MODULATED (OOK) TRANSMIT SIGNAL
ADC
ANALOG MUX
TRANSMIT DRIVER
TX
32
IRLED
IRLED
IRLED
ZERO X-ING DETECTOR
COMP
DEMOD
ENVELOPE FOLLOWER
COMP
DEMOD
COMP
DEMOD
TUNED SWITCHABLE-GAIN AMPLIFIER
TUNED AMP
TUNED SWITCHABLE-GAIN AMPLIFIER
TUNED AMP
TUNED SWITCHABLE-GAIN AMPLIFIER
TUNED AMP
PHOTO-DIODE RECEIVER
PREAMP
PHOTO-DIODE RECEIVER
PREAMP
PHOTO-DIODE RECEIVER
PREAMP
30₁
30₂
30₃
Vbias
Vbias
Vbias
D12
D23
D13

FIG. 12C

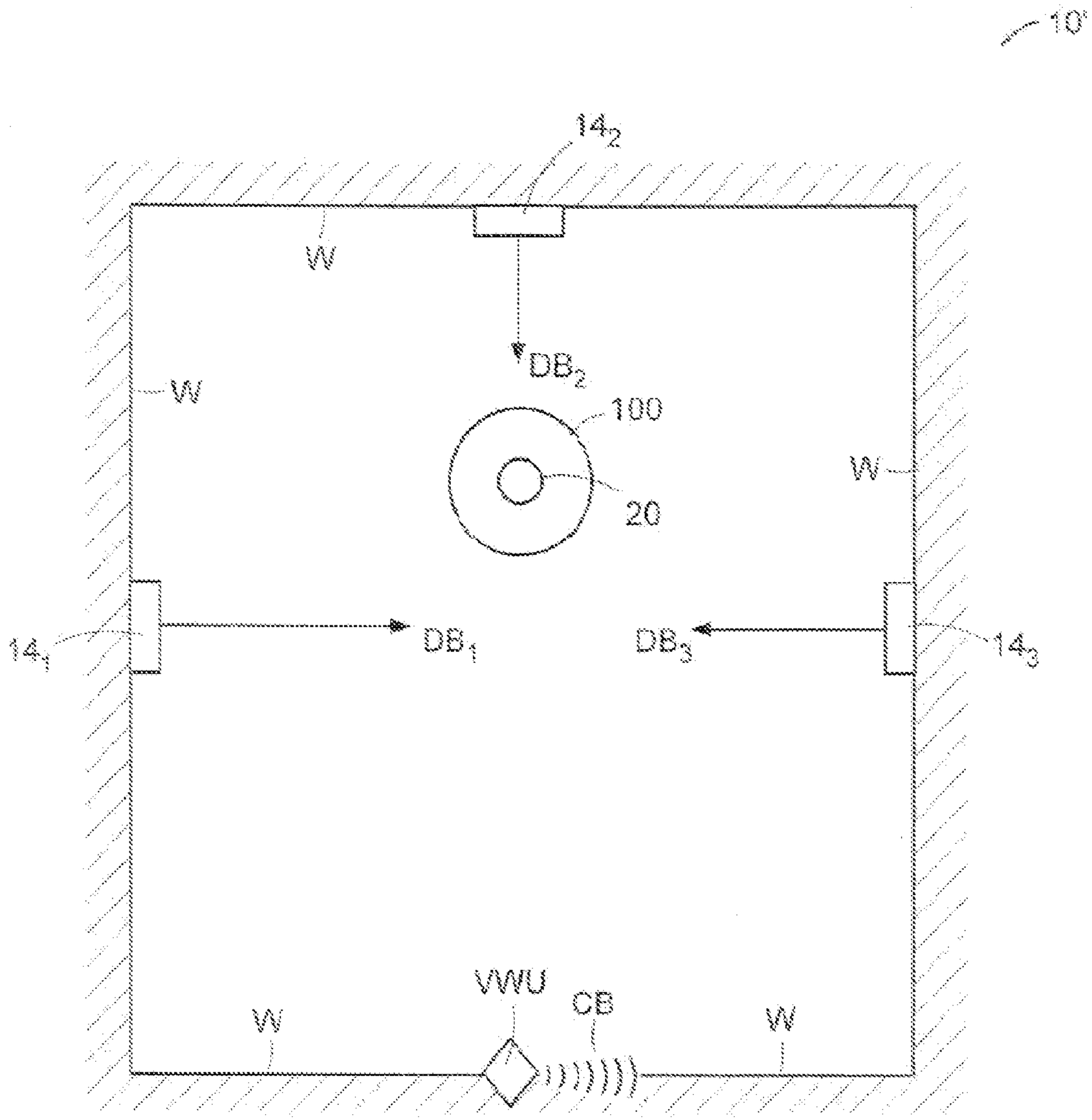

FIG. 13

NAVIGATIONAL CONTROL SYSTEM FOR A ROBOTIC DEVICE

CROSS REFERENCE TO RELATED APPLICATIONS

This U.S. patent application is a continuation of, and claims priority under 35 U.S.C. § 120 from, U.S. patent application Ser. No. 12/512,114, filed on Jul. 30, 2009, which is a continuation-in-part of, and claims priority under 35 U.S.C. § 120 from, U.S. patent application Ser. No. 11/682,642, filed on Mar. 6, 2007, which is a continuation of U.S. patent application Ser. No. 11/341,111, filed on Jan. 27, 2006 (now U.S. Pat. No. 7,188,000), which is a continuation of U.S. patent application Ser. No. 10/661,835, filed Sep. 12, 2003 (now U.S. Pat. No. 7,024,278), which claims priority under 35 U.S.C. § 119(e) to U.S. Provisional Application 60/410,480, filed on Sep. 13, 2002.

U.S. patent application Ser. No. 12/512,114 is also a continuation-in-part of, and claims priority under 35 U.S.C. § 120 from, U.S. patent application Ser. No. 12/255,393, filed on Oct. 21, 2008, which is a continuation of U.S. patent application Ser. No. 11/860,272, filed on Sep. 24, 2007 (now U.S. Pat. No. 7,459,871), which is a continuation of U.S. patent application Ser. No. 11/533,294, filed on Sep. 19, 2006 (now U.S. Pat. No. 7,288,912), which is a continuation of U.S. patent application Ser. No. 11/109,832, filed on Apr. 19, 2005, which is a continuation of U.S. patent application Ser. No. 10/766,303, filed on Jan. 28, 2004.

The disclosures of these prior applications are considered part of the disclosure of this application and are hereby incorporated herein by reference in their entireties.

This U.S. patent application is related to commonly-owned U.S. patent application Ser. No. 10/056,804, filed on Jan. 24, 2002 entitled "Method and System for Robot Localization and Confinement", U.S. patent application Ser. No. 10/320,729, filed on Dec. 16 2002, entitled "Autonomous Floor-Cleaning Device", U.S. patent application Ser. No. 10/167,851, filed on Jun. 12, 2002, entitled "Method and System for Multi-Mode Coverage for an Autonomous Robot", and U.S. continuation-in-part patent application Ser. No. 10/453,202, filed on Jun. 3, 2003, entitled "Robot Obstacle Detection System", each of which is hereby incorporated herein by reference in its entirety.

TECHNICAL FIELD

This disclosure relates to relates to a navigational control system for a robotic device.

BACKGROUND

Robotic engineers have long worked on developing an effective method of autonomous cleaning. This has led to the development of two separate and distinct schemes for autonomous robotic devices: (1) deterministic cleaning; and (2) random cleaning.

In deterministic cleaning, where the cleaning rate equals the coverage rate and is, therefore, a more efficient cleaning method than random-motion cleaning, the autonomous robotic device follows a defined path, e.g., a boustrophedon path that is calculated to facilitate complete cleaning coverage of a given area while eliminating redundant cleaning Deterministic cleaning requires that the robotic device maintain precise position knowledge at all times, as well as its position history (where it has been), which, in turn, requires a sophisticated positioning system. A suitable positioning

system—a positioning system suitably accurate for deterministic cleaning might rely on scanning laser ranging systems, ultrasonic transducers, a carrier phase differential GPS, or other sophisticated methods—is typically prohibitively expensive and labor intensive, requiring an involved pre-setup to accommodate the unique conditions of each area to be cleaned, e.g., room geometry, furniture locations. In addition, methods that rely on global positioning are typically incapacitated by failure of any part of the positioning system.

One illustrative example of a highly sophisticated (and relatively expensive) robotic device for deterministic cleaning is the RoboScrub device built by Denning Mobile Robotics and Windsor Industries. The RoboScrub device employs sonar and infrared detectors, bump sensors, and a high-precision laser navigation system to define the deterministic cleaning path. The navigation system employed with the RoboScrub device requires numerous large bar code targets to be set up in various strategic positions within the area to be cleaned, and effective operation of the navigation system requires that at least four of such targets be visible simultaneously. This target accessibility requirement effectively limits the use of the RoboScrub device to large uncluttered open areas.

Other representative deterministic robotic devices are described in U.S. Pat. No. 5,650,702 (Azumi), U.S. Pat. No. 5,548,511 (Bancroft), U.S. Pat. No. 5,537,017 (Feiten et al.), U.S. Pat. No. 5,353,224 (Lee et al.), U.S. Pat. No. 4,700,427 (Knepper), and U.S. Pat. No. 4,119,900 (Kreimnitz). These representative deterministic robotic devices are likewise relatively expensive, require labor intensive pre-setup, and/or are effectively limited to large, uncluttered areas of simple geometric configuration (square, rectangular rooms with minimal (or no) furniture).

Due to the limitations and difficulties inherent in purely deterministic cleaning systems, some robotic devices rely on pseudo-deterministic cleaning schemes such as dead reckoning. Dead reckoning consists of continually measuring the precise rotation of each drive wheel (e.g., using optical shaft encoders) to continually calculate the current position of the robotic device, based upon a known starting point and orientation. In addition to the disadvantages of having to start cleaning operations from a fixed position with the robotic device in a specified orientation, the drive wheels of dead reckoning robotic devices are almost always subject to some degree of slippage, which leads to errors in the calculation of current position. Accordingly, dead reckoning robotic devices are generally considered unreliable for cleaning operations of any great duration—resulting in intractable system neglect, i.e., areas of the surface to be cleaned are not cleaned. Other representative examples of pseudo-deterministic robotic devices are described in U.S. Pat. No. 6,255,793 (Peless et al.) and U.S. Pat. No. 5,109,566 (Kobayashi et al.).

A robotic device operating in random motion, under the control of one or more random-motion algorithms stored in the robotic device, represents the other basic approach to cleaning operations using autonomous robotic devices. The robotic device autonomously implement such random-motion algorithm(s) in response to internal events, e.g., signals generated by a sensor system, elapse of a time period (random or predetermined). In a typical room without obstacles, a robotic device operating under the control of a random-motion algorithm will provide acceptable cleaning coverage given enough cleaning time. Compared to a robotic device operating in a deterministic cleaning mode, a robotic device utilizing a random-motion algorithm must

operate for a longer period of time to achieve acceptable cleaning coverage. To have a high confidence that a random-motion robotic device has cleaned 98% of an obstacle-free room, the random-motion robotic device must run approximately five times longer than a deterministic robotic device having similarly sized cleaning mechanisms and moving at approximately the same speed.

However, an area to be cleaned that includes one or more randomly-situated obstacles causes a marked increase in the running time for a random-motion robotic device to effect 98% cleaning coverage. Therefore, while a random motion robotic device is a relatively inexpensive means of cleaning a defined working area as contrasted to a deterministic robotic device, the random-motion robotic device requires a significantly higher cleaning time.

A need exists to provide a deterministic component to a random-motion robotic device to enhance the cleaning efficiency thereof to reduce the running time for the random-motion robotic cleaning to achieve a 98% cleaning coverage.

SUMMARY

The present disclosure provides a debris sensor, and apparatus utilizing such a debris sensor, wherein the sensor is instantaneously responsive to debris strikes, and can be used to control, select or vary the operational mode of an autonomous or non-autonomous cleaning apparatus containing such a sensor.

In one aspect of the disclosure, an autonomous cleaning apparatus includes a chassis, a drive system disposed on the chassis and operable to enable movement of the cleaning apparatus, and a controller in communication with the drive system. The controller includes a processor operable to control the drive system to steer movement of the cleaning apparatus. The autonomous cleaning apparatus includes a cleaning head system disposed on the chassis and a sensor system in communication with the controller. The sensor system includes a debris sensor for generating a debris signal, a bump sensor for generating a bump signal, and an obstacle following sensor disposed on a side of the autonomous cleaning apparatus for generating an obstacle signal. The processor executes a prioritized arbitration scheme to identify and implement one or more dominant behavioral modes based upon at least one signal received from the sensor system.

Implementations of the disclosure may include one or more of the following features. In some implementations, the processor implements a spot cleaning mode in an area in which the cleaning apparatus was operating, substantially immediately in response to receiving a debris signal generated by the debris sensor. The spot cleaning mode may comprise maneuvering the autonomous cleaning apparatus according to a self-bounded area algorithm. The self-bounded area algorithm may include a spiraling algorithm at a reduced drive speed. In some implementations, the processor implements a high power cleaning mode in response to the debris signal. The high power mode includes elevating power delivery to the cleaning head system.

In some implementations, the debris sensor includes a piezoelectric sensor located proximate to a cleaning pathway and responsive to a debris impact thereon to generate a debris signal indicative of such impact. The debris sensor may include a plate, an elastomer pad supporting the plate, and a piezoelectric material and an electrode both secured to the plate. The electrode is in communication with the controller. In some examples, the debris sensor includes a piezoelectric film.

In some implementations, the sensor system includes right and left debris sensors in communication with the controller and disposed proximate a cleaning pathway of the cleaning head system for generating respective debris signals. The processor directs the drive system to turn right in response to the debris signal generated by the right debris sensor and to turn left in response to the debris signal generated by the left debris sensor. The right and left debris sensors may be disposed opposite each other and equidistantly from a center axis defined by the cleaning pathway.

The bump sensor may include a displaceable bumper attached to the chassis and at least one break-beam sensor disposed on the displaceable bumper. The break-beam sensor is activated upon displacement of the bumper toward the chassis.

The obstacle following sensor may include an emitter emitting an emission signal laterally and a detector configured to detect the emission reflected off an obstacle adjacent the cleaning apparatus. The emitter and the detector are configured to establish a focal point. The obstacle following sensor may be disposed on a dominant side of the autonomous cleaning apparatus.

In some implementations, the sensor system includes a cliff sensor for generating a cliff signal upon detection of a cliff. The cliff sensor includes an emitter emitting an emission signal downwardly and a detector configured to detect the emission reflected off a surface being traversed by the cleaning apparatus. The emitter and the detector are configured to establish a focal point below the cleaning apparatus. In some examples, the sensor system includes a wheel drop sensor and/or a stall sensor.

In another aspect of the disclosure, an autonomous cleaning apparatus includes a chassis a drive system disposed on the chassis and operable to enable movement of the cleaning apparatus, and a controller in communication with the drive system. The controller includes a processor operable to control the drive system to steer movement of the cleaning apparatus. The autonomous cleaning apparatus includes a cleaning head system disposed on the chassis and a sensor system in communication with the controller. The sensor system includes a debris sensor for generating a debris signal, a bump sensor for generating a bump signal, and an obstacle following sensor disposed on a side of the autonomous cleaning apparatus for generating an obstacle signal. The processor executes a prioritized arbitration scheme to identify and implement one or more dominant behavioral modes based upon at least one signal received from the sensor system. The processor controls one or more operational conditions of the autonomous cleaning apparatus based upon the debris signal. The processor controls the drive system to execute a pattern of movements to steer the autonomous cleaning apparatus toward a debris area corresponding to the debris signal generated by the debris sensor.

In yet another aspect of the disclosure, an autonomous cleaning apparatus includes a drive system operable to enable movement of the cleaning apparatus, a controller in communication with the drive system, and a debris sensor for generating a debris signal indicating that the cleaning apparatus has encountered debris. The controller includes a processor operable to control the drive system to provide at least one pattern of movement of the cleaning apparatus. The debris sensor is located along a cleaning passageway of the cleaning apparatus and responsive to debris passing through the cleaning passageway to generate a signal indicative of

such passing. The processor is responsive to the debris signal to select a pattern of movement of the cleaning apparatus. The pattern of movement includes steering the cleaning apparatus toward an area containing debris. In some implementations, the pattern of movement includes spot coverage of an area containing debris.

One aspect of the disclosure is an autonomous cleaning apparatus including a drive system operable to enable movement of the cleaning apparatus, a controller in communication with the drive system, the controller including a processor operable to control the drive system to provide at least one pattern of movement of the cleaning apparatus; and a debris sensor for generating a debris signal indicating that the cleaning apparatus has encountered debris; wherein the processor is responsive to the debris signal to select an operative mode from among predetermined operative modes of the cleaning apparatus.

The selection of operative mode could include selecting a pattern of movement of the cleaning apparatus. The pattern of movement can include spot coverage of an area containing debris, or steering the cleaning apparatus toward an area containing debris. The debris sensor could include spaced-apart first and second debris sensing elements respectively operable to generate first and second debris signals; and the processor can be responsive to the respective first and second debris signals to select a pattern of movement, such as steering toward a side (e.g., left or right side) with more debris.

The debris sensor can include a piezoelectric sensor element located proximate to a cleaning pathway of the cleaning apparatus and responsive to a debris strike to generate a signal indicative of such strike.

The debris sensor can also be incorporated into a non-autonomous cleaning apparatus. This aspect of the invention can include a piezoelectric sensor located proximate to a cleaning pathway and responsive to a debris strike to generate a debris signal indicative of such strike; and a processor responsive to the debris signal to change an operative mode of the cleaning apparatus. The change in operative mode could include illuminating a user-perceptible indicator light, changing a power setting (e.g., higher power setting when more debris is encountered), or slowing or reducing a movement speed of the apparatus.

A further aspect of the disclosure is a debris sensor, including a piezoelectric element located proximate to or within a cleaning pathway of the cleaning apparatus and responsive to a debris strike to generate a first signal indicative of such strike, and a processor operable to process the first signal to generate a second signal representative of a characteristic of debris being encountered by the cleaning apparatus. That characteristic could be, for example, a quantity or volumetric parameter of the debris, or a vector from a present location of the cleaning apparatus to an area containing debris.

Another aspect of the disclosure takes advantage of the motion of an autonomous cleaning device across a floor or other surface, processing the debris signal in conjunction with knowledge of the cleaning device's movement to calculate a debris gradient. The debris gradient is representative of changes in debris strikes count as the autonomous cleaning apparatus moves along a surface. By examining the sign of the gradient (positive or negative, associated with increasing or decreasing debris), an autonomous cleaning device controller can continuously adjust the path or pattern of movement of the device to clean a debris field most effectively.

Another aspect of the disclosure includes a navigational control system that enhances the cleaning efficiency of a robotic device by adding a deterministic component (in the form of a conduct prescribed by a navigation control algorithm) to the random motion of the robotic device generated by predetermined behavioral modes stored in the robotic device.

Yet another aspect of the disclosure includes a navigational control unit operating under a navigation control algorithm that includes a predetermined triggering event that defines when the prescribed conduct will be implemented by the robotic device.

These and other aspects of the disclosure are achieved by means of a navigational control system for deterministically altering movement activity of a robotic device operating in a defined working area, comprising a transmitting subsystem integrated in combination with the robotic device, the transmitting subsystem comprising means for emitting a number of directed beams, each directed beam having a predetermined emission pattern, and a receiving subsystem functioning as a base station that includes a navigation control algorithm that defines a predetermined triggering event for the navigational control system and a set of detection units positioned within the defined working area, the detection units being positioned in a known aspectual relationship with respect to one another, the set of detection units being configured and operative to detect one or more of the directed beams emitted by the transmitting system; and wherein the receiving subsystem is configured and operative to process the one or more detected directed beams under the control of the navigational control algorithm to determine whether the predetermined triggering event has occurred, and, if the predetermined triggering event has occurred transmit a control signal to the robotic device, wherein reception of the control signal by the robotic device causes the robotic device to implement a prescribed conduct that deterministically alters the movement activity of the robotic device.

The details of one or more implementations of the disclosure are set forth in the accompanying drawings and the description below. Other aspects, features, and advantages will be apparent from the description and drawings, and from the claims.

DESCRIPTION OF DRAWINGS

FIG. **1** is a top-view schematic of an exemplary robotic device having particular utility for use in the navigational control system.

FIG. **2** is an exemplary hardware block diagram for the robotic device of FIG. **1**.

FIG. **3** is a side view of the robotic device of FIG. **1**, showing a debris sensor situated in a cleaning or vacuum pathway, where it will be struck by debris upswept by the main cleaning brush element.

FIG. **4**A is a diagram of a piezoelectric debris sensor and FIG. **4**B is an exploded diagram of a piezoelectric debris sensor.

FIG. **5** is a schematic diagram of a debris sensor signal processing architecture.

FIGS. **6** and **6**A-**6**C are schematic diagrams of signal processing circuitry for the debris sensor architecture of FIG. **5**.

FIG. **7** is a schematic diagram showing the debris sensor in a non-autonomous cleaning apparatus.

FIG. **8** is a flowchart of operating a debris sensor.

FIG. **9** is a schematic depiction of a navigational control system that comprises a transmitting subsystem and a receiving subsystem.

FIG. **10** illustrates a polar tessellation of a defined working area in which a robotic device is operating.

FIG. **11**A illustrates the operation of a transmitting subsystem in synchronized operation with the receiving subsystem of a navigational control system.

FIG. **11**B illustrates the operation of the receiving subsystem in synchronized operation with the transmitting subsystem of FIG. **5**A.

FIG. **11**C illustrates the operation of a transmitting subsystem in synchronized operation with the receiving subsystem of a navigational control system.

FIG. **11**D illustrates the operation of the receiving subsystem in synchronized operation with the transmitting subsystem of FIG. **5**C.

FIG. **12**A illustrates a navigational control system wherein the transmitting subsystem is integrated in combination with the robotic device and the receiving system functions as a base station mounted against one wall of a defined working area.

FIG. **12**B illustrates the set of transmitting units comprising the transmitting subsystem of the robotic device of FIG. **12**A and representative directed beams having a predetermined emission patterns.

FIG. **12**C is a schematic illustration of the receiving subsystem of FIG. **12**A.

FIG. **13** illustrates a navigational control system wherein the receiving subsystem is integrated in combination with the robotic device and the transmitting subsystem has a distributed configuration.

Like reference symbols in the various drawings indicate like elements.

DETAILED DESCRIPTION

While the debris sensor of the present disclosure can be incorporated into a wide range of autonomous cleaning devices (and indeed, into non-autonomous cleaning devices as shown by way of example in FIG. **7**), it will first be described in the context of an exemplary autonomous cleaning device shown in FIGS. **1**-**3**.

FIG. **1** is a top-view schematic of an exemplary preferred embodiment of a robotic device **100** having particular utility in combination with a navigational control system **10** according to the present invention. FIG. **2** is a block diagram of the hardware of the robot device **100** of FIG. **1**.

The hardware and behavioral modes (coverage behaviors for cleaning operations; escape behaviors for transitory movement patterns; and safety behaviors for emergency conditions) of the robotic device **100**, which is manufactured, distributed, and/or marketed by the iRobot Corporation of Burlington, Mass. under the ROOMBA trademark, are briefly described in the following paragraphs to facilitate a more complete understanding of the navigational control system **10** of the present invention. Further details regarding the hardware and behavioral modes of the robotic device **100** can be found in commonly-owned, co-pending U.S. nonprovisional patent application Ser. No. 10/167,851, filed 12 Jun. 2002, entitled METHOD AND SYSTEM FOR MULTI-MODE COVERAGE FOR AN AUTONOMOUS ROBOT, and U.S. nonprovisional patent application Ser. No. 10/320,729, filed 16 Dec. 2002, entitled AUTONOMOUS FLOOR-CLEANING DEVICE.

In the following description of the robotic device **100**, use of the terminology "forward"/"fore" refers to the primary direction of motion (forward) of the robotic device (see arrow identified by reference character "FM" in FIG. **1**). The fore/aft axis FA_X of the robotic device **100** coincides with the medial diameter of the robotic device **100** that divides the robotic device **100** into generally symmetrical right and left halves, which are defined as the dominant and non-dominant sides, respectively.

Robotic Device

The robotic device **100** has a generally cylindrical housing infrastructure that includes a chassis **102** and an outer shell **104** secured to the chassis **102** that define a structural envelope of minimal height (to facilitate movement under furniture). The hardware comprising the robotic device **100** can be generally categorized as the functional elements of a power system, a motive power system, a sensor system, a control module, a side brush assembly, or a self-adjusting cleaning head system, respectively, all of which are integrated in combination with the housing infrastructure. In addition to such categorized hardware, the robotic device **100** further includes a forward bumper **106** having a generally arcuate configuration and a nose-wheel assembly **108**.

The forward bumper **106** (illustrated as a single component; alternatively, a two-segment component) is integrated in movable combination with the chassis **102** (by means of displaceable support members pairs) to extend outwardly therefrom. Whenever the robotic device **100** impacts an obstacle (e.g., wall, furniture) during movement thereof, the bumper **106** is displaced (compressed) towards the chassis **102** and returns to its extended (operating) position when contact with the obstacle is terminated.

The nose-wheel assembly **108** is mounted in biased combination with the chassis **102** so that the nose-wheel subassembly **108** is in a retracted position (due to the weight of the robotic device **100**) during cleaning operations wherein it rotates freely over the surface being cleaned. When the nose-wheel subassembly **108** encounters a drop-off during operation (e.g., descending stairs, split-level floors), the nose-wheel assembly **108** is biased to an extended position.

The hardware of the power system, which provides the energy to power the electrically-operated hardware of the robotic device **100**, comprises a rechargeable battery pack **110** (and associated conduction lines, not shown) that is integrated in combination with the chassis **102**.

The motive power system provides the means that propels the robotic device **100** and operates the cleaning mechanisms, e.g., side brush assembly and the self-adjusting cleaning head system, during movement of the robotic device **100**. The motive power system comprises left and right main drive wheel assemblies **112**L, **112**R, their associated independent electric motors **114**L, **114**R, and electric motors **116**, **118** for operation of the side brush assembly and the self-adjusting cleaning head subsystem, respectively.

The main drive wheel assemblies **112**L, **112**R are independently mounted in biased combination with the chassis **102** (for pivotal motion with respect thereto) at opposed ends of the transverse diameter (with respect to the fore-aft axis FA_X) of the robotic device **100** and are in a retracted position (due to the weight of the robotic device **100**) during operation thereof wherein the axes of rotation are approximately coplanar with the bottom of the chassis **102**. If the robotic device **100** is removed from the surface being cleaned, the main wheel assemblies **112**L, **112**R are pivotally-biased to an extended position wherein their axes of rotation are below the bottom plane of the chassis **102** (in this extended position the rechargeable battery pack **110** is

automatically turned off by the control module executing one of the safety behavioral modes).

The electric motors **114**L, **114**R are mechanically coupled to the main drive wheel assemblies **112**L, **112**R, respectively, and independently operated by control signals generated by the control module as a response to the implementation of a behavioral mode. Independent operation of the electric motors **114**L, **114**R allows the main wheel assemblies **112**L, **112**R to be: (1) rotated at the same speed in the same direction to propel the robotic device **100** in a straight line, forward or aft; (2) differentially rotated (including the condition wherein one wheel assembly is not rotated) to effect a variety of right and/or left turning patterns (over a spectrum of sharp to shallow turns) for the robotic device **100**; and (3) rotated at the same speed in opposite directions to cause the robotic device **100** to turn in place, i.e., "spin on a dime", to provide an extensive repertoire of movement capability for the robotic device **100**.

The sensor system comprises a variety of different sensor units that are operative to generate signals that control the behavioral mode operations of the robotic device **100**. The described robotic device **100** includes obstacle detection units **120**, cliff detection units **122**, wheel drop sensors **124**, an obstacle-following unit **126**, a virtual wall omnidirectional detector **128**, stall-sensor units **130**, and main wheel encoder units **132**, and left and right debris sensors **125**L, **125**R.

For the described embodiment, the obstacle ("bump") detection units **120** are IR break beam sensors mounted in combination with the displaceable support member pairs of the forward bumper **106**. These detection units **120** are operative to generate one or more signals indicating relative displacement between one or more support member pairs whenever the robotic device **100** impacts an obstacle such that the forward bumper **106** is compressed. These signals are processed by the control module to determine an approximate point of contact with the obstacle relative to the fore-aft axis FA_X of the robotic device **100** (and the behavioral mode(s) to be implemented).

The cliff detection units **122** are mounted in combination with the forward bumper **106**. Each cliff detection unit **122** comprises an IR emitter—detector pair configured and operative to establish a focal point such that radiation emitted downwardly by the emitter is reflected from the surface being traversed and detected by the detector. If reflected radiation is not detected by the detector, i.e., a drop-off is encountered, the cliff detection unit **122** transmits a signal to the control module (which causes one or more behavioral modes to be implemented).

A wheel drop sensor **124** such as a contact switch is integrated in combination with each of the main drive wheel assemblies **112**L, **112**R and the nose wheel assembly **108** and is operative to generate a signal whenever any of the wheel assemblies is in an extended position, i.e., not in contact with the surface being traversed, (which causes the control module to implement one ore more behavioral modes).

The obstacle-following unit **126** for the described embodiment is an IR emitter-detector pair mounted on the 'dominant' side (right hand side of FIG. **1**) of the robotic device **100**. The emitter-detector pair is similar in configuration to the cliff detection units **112**, but is positioned so that the emitter emits radiation laterally from the dominant side of the robotic device **100**. The unit **126** is operative to transmit a signal to the control module whenever an obstacle is detected as a result of radiation reflected from the obstacle and detected by the detector. The control module, in response to this signal, causes one or more behavioral modes to be implemented.

A virtual wall detection system for use in conjunction with the described embodiment of the robotic device **100** comprises an omnidirectional detector **128** mounted atop the outer shell **104** and a stand-alone transmitting unit (not shown) that transmits an axially-directed confinement beam. The stand-alone transmitting unit is positioned so that the emitted confinement beam blocks an accessway to a defined working area, thereby restricting the robotic device **100** to operations within the defined working area (e.g., in a doorway to confine the robotic device **100** within a specific room to be cleaned). Upon detection of the confinement beam, the omnidirectional detector **128** transmits a signal to the control module (which causes one or more behavioral modes to be implemented to move the robotic device **100** away from the confinement beam generated by the stand-alone transmitting unit).

A stall sensor unit **130** is integrated in combination with each electric motor **114**L, **114**R, **116**, **118** and operative to transmit a signal to the control module when a change in current is detected in the associated electric motor (which is indicative of a dysfunctional condition in the corresponding driven hardware). The control module is operative in response to such a signal to implement one or more behavioral modes.

An IR encoder unit **132** (see FIG. **2**) is integrated in combination with each main wheel assembly **112**L, **112**R and operative to detect the rotation of the corresponding wheel and transmit signals corresponding thereto the control module (wheel rotation can be used to provide an estimate of distance traveled for the robotic device **100**).

The control module comprises the microprocessing unit **135** illustrated in FIG. **2** that includes I/O ports connected to the sensors and controllable hardware of the robotic device **100**, a microcontroller, and ROM and RAM memory. The I/O ports function as the interface between the microcontroller and the sensor units and controllable hardware, transferring signals generated by the sensor units to the microcontroller and transferring control (instruction) signals generated by the microcontroller to the controllable hardware to implement a specific behavioral mode.

The microcontroller is operative to execute instruction sets for processing sensor signals, implementing specific behavioral modes based upon such processed signals, and generating control (instruction) signals for the controllable hardware based upon implemented behavioral modes for the robotic device **100**. The cleaning coverage and control programs for the robotic device **100** are stored in the ROM of the microprocessing unit **135**, which includes the behavioral modes, sensor processing algorithms, control signal generation algorithms and a prioritization algorithm for determining which behavioral mode or modes are to be given control of the robotic device **100**. The RAM of the microprocessing unit **135** is used to store the active state of the robotic device **100**, including the ID of the behavioral mode(s) under which the robotic device **100** is currently being operated and the hardware commands associated therewith.

Referring again to FIG. **1**, the side brush assembly **140** is configured and operative to entrain particulates outside the periphery of the housing infrastructure and to direct such particulates towards the self-adjusting cleaning head system. The side brush assembly **140** provides the robotic device **100** with the capability of cleaning surfaces adjacent to base-boards when the robotic device is operated in an

Obstacle-Following behavioral mode. As shown in FIG. **1**, the side brush assembly **140** is preferably mounted in combination with the chassis **102** in the forward quadrant on the dominant side of the robotic device **100**.

The self-adjusting cleaning head system **145** for the described robotic device **100** comprises a dual-stage brush assembly and a vacuum assembly, each of which is independently powered by an electric motor (reference numeral **118** in FIG. **1** actually identifies two independent electric motors—one for the brush assembly and one for the vacuum assembly). The cleaning capability of the robotic device **100** is commonly characterized in terms of the width of the cleaning head system **145** (see reference character W in FIG. **1**).

The dual-stage brush assembly and the inlet of the vacuum assembly are integrated in combination with a deck structure, which is pivotally mounted in combination with the chassis **102** and operatively integrated with the motor of the dual-stage brush assembly. In response to a predetermined reduction in rotational speed of the brush assembly motor, the brush assembly motor provides the motive force to pivot the deck structure with respect to the chassis **102**. The pivoting deck structure provides the self adjusting capability for the cleaning head assembly **145**, which allows the robotic device **100** to readily transition between disparate surfaces during cleaning operations, e.g., carpeted surface to bare surface or vice versa, without hanging up.

The dual-stage brush assembly comprises asymmetric, counter-rotating brushes that are positioned (forward of the inlet of the vacuum assembly), configured and operative to direct particulate debris into a removable dust cartridge (not shown). The positioning, configuration, and operation of the brush assembly concomitantly directs particulate debris towards the inlet of the vacuum assembly such that particulates that are not swept up by the dual-stage brush assembly can be subsequently ingested by the vacuum assembly as a result of movement of the robotic device **100**.

Operation of the vacuum assembly independently of the self-adjustable brush assembly allows the vacuum assembly to generate and maintain a higher vacuum force using a battery-power source than would be possible if the vacuum assembly were operated in dependence with the brush assembly.

Referring now to FIG. **3**, in some implementations of a robotic cleaning device, the cleaning brush assembly includes asymmetric, counter-rotating flapper and main brush elements **92** and **94**, respectively, that are positioned forward of the vacuum assembly inlet **84**, and operative to direct particulate debris **127** into a removable dust cartridge **86**. As shown in FIG. **3**, the autonomous cleaning apparatus can also include left and right debris sensor elements **125**PS, which can be piezoelectric sensor elements, as described in detail below. The piezoelectric debris sensor elements **125**PS can be situated in a cleaning pathway of the cleaning device, mounted, for example, in the roof of the cleaning head, so that when struck by particles **127** swept up by the brush elements and/or pulled up by vacuum, the debris sensor elements **125**PS generate electrical pulses representative of debris impacts and thus, of the presence of debris in an area in which the autonomous cleaning device is operating.

More particularly, in the arrangement shown in FIG. **3**, the sensor elements **125**PS are located substantially at an axis AX along which main and flapper brushes **94**, **92** meet, so that particles strike the sensor elements **125** PS with maximum force.

As shown in FIG. **1**, and described in greater detail below, the robotic cleaning device can be fitted with left and right side piezoelectric debris sensors, to generate separate left and right side debris signals that can be processed to signal the robotic device to turn in the direction of a "dirty" area

The operation of the piezoelectric debris sensors, as well as signal processing and selection of behavioral modes based on the debris signals they generate, will be discussed below following a brief discussion of general aspects of behavioral modes for the cleaning device.

Behavioral Modes

The robotic device **100** uses a variety of behavioral modes to effectively clean a defined working area where behavioral modes are layers of control systems that can be operated in parallel. The microprocessor unit **135** is operative to execute a prioritized arbitration scheme to identify and implement one or more dominant behavioral modes for any given scenario based upon inputs from the sensor system.

The behavioral modes for the described robotic device **100** can be characterized as: (1) coverage behavioral modes; (2) escape behavioral modes; and (3) safety behavioral modes. Coverage behavioral modes are primarily designed to allow the robotic device **100** to perform its cleaning operations in an efficient and effective manner and the escape and safety behavioral modes are priority behavioral modes implemented when a signal from the sensor system indicates that normal operation of the robotic device **100** is impaired, e.g., obstacle encountered, or is likely to be impaired, e.g., drop-off detected.

Representative and illustrative coverage behavioral (cleaning) modes for the robotic device **100** include: (1) a Spot Coverage pattern; (2) an Obstacle-Following (or Edge-Cleaning) Coverage pattern, and (3) a Room Coverage pattern. The Spot Coverage pattern causes the robotic device **100** to clean a limited area within the defined working area, e.g., a high-traffic area. In a preferred embodiment the Spot Coverage pattern is implemented by means of a spiral algorithm (but other types of self-bounded area algorithms, e.g., polygonal, can be used). The spiral algorithm, which causes outward spiraling (preferred) or inward spiraling movement of the robotic device **100**, is implemented by control signals from the microprocessing unit **135** to the main wheel assemblies **112**L, **112**R to change the turn radius/radii thereof as a function of time (thereby increasing/decreasing the spiral movement pattern of the robotic device **100**).

The robotic device **100** is operated in the Spot Coverage pattern for a predetermined or random period of time, for a predetermined or random distance (e.g., a maximum spiral distance) and/or until the occurrence of a specified event, e.g., activation of one or more of the obstacle detection units **120** (collectively a transition condition). Once a transition condition occurs, the robotic device **100** can implement or transition to a different behavioral mode, e.g., a Straight Line behavioral mode (in a preferred embodiment of the robotic device **100**, the Straight Line behavioral mode is a low priority, default behavior that propels the robot in an approximately straight line at a preset velocity of approximately 0.306 m/s) or a Bounce behavioral mode in combination with a Straight Line behavioral mode.

If the transition condition is the result of the robotic device **100** encountering an obstacle, the robotic device **100** can take other actions in lieu of transitioning to a different behavioral mode. The robotic device **100** can momentarily implement a behavioral mode to avoid or escape the obstacle and resume operation under control of the spiral algorithm (i.e., continue spiraling in the same direction). Alternatively,

the robotic device **100** can momentarily implement a behavioral mode to avoid or escape the obstacle and resume operation under control of the spiral algorithm (but in the opposite direction—reflective spiraling).

The Obstacle-Following Coverage pattern causes the robotic device **100** to clean the perimeter of the defined working area, e.g., a room bounded by walls, and/or the perimeter of an obstacle (e.g., furniture) within the defined working area. Preferably the robotic device **100** utilizes obstacle-following unit **126** to continuously maintain its position with respect to an obstacle, e.g., wall, furniture, so that the motion of the robotic device **100** causes it to travel adjacent to and concomitantly clean along the perimeter of the obstacle. Different embodiments of the obstacle-following unit **126** can be used to implement the Obstacle-Following behavioral pattern.

In a first embodiment, the obstacle-following unit **126** is operated to detect the presence or absence of the obstacle. In an alternative embodiment, the obstacle-following unit **126** is operated to detect an obstacle and then maintain a predetermined distance between the obstacle and the robotic device **100**. In the first embodiment, the microprocessing unit **135** is operative, in response to signals from the obstacle-following unit, to implement small CW or CCW turns to maintain its position with respect to the obstacle. The robotic device **100** implements a small CW when the robotic device **100** transitions from obstacle detection to non-detection (reflection to non-reflection) or to implement a small CCW turn when the robotic device **100** transitions from non-detection to detection (non-reflection to reflection) . Similar turning behaviors are implemented by the robotic device **100** to maintain the predetermined distance from the obstacle.

The robotic device **100** is operated in the Obstacle-Following behavioral mode for a predetermined or random period of time, for a predetermined or random distance (e.g., a maximum or minimum distance) and/or until the occurrence of a specified event, e.g., activation of one or more of the obstacle detection units **120** a predetermined number of times (collectively a transition condition). In certain embodiments, the microprocessor **135** will cause the robotic device to implement an Align behavioral mode upon activation of the obstacle-detection units **120** in the Obstacle-Following behavioral mode wherein the implements a minimum angle CCW turn to align the robotic device **100** with the obstacle.

The Room Coverage pattern can be used by the robotic device **100** to clean any defined working area that is bounded by walls, stairs, obstacles or other barriers (e.g., a virtual wall unit). A preferred embodiment for the Room Coverage pattern comprises the Random-Bounce behavioral mode in combination with the Straight Line behavioral mode. Initially, the robotic device **100** travels under control of the Straight-Line behavioral mode, i.e., straight-line algorithm (main drive wheel assemblies **112**L, **112**R operating at the same rotational speed in the same direction) until an obstacle is encountered. Upon activation of one or more of the obstacle detection units **120**, the microprocessing unit **135** is operative to compute an acceptable range of new directions based upon the obstacle detection unit(s) **126** activated. The microprocessing unit **135** selects a new heading from within the acceptable range and implements a CW or CCW turn to achieve the new heading with minimal movement. In some embodiments, the new turn heading may be followed by forward movement to increase the cleaning efficiency of the robotic device **100**. The new heading may be randomly selected across the acceptable range of headings, or based upon some statistical selection scheme, e.g., Gaussian distribution. In other embodiments of the Room Coverage behavioral mode, the microprocessing unit **135** can be programmed to change headings randomly or at predetermined times, without input from the sensor system.

The robotic device **100** is operated in the Room Coverage behavioral mode for a predetermined or random period of time, for a predetermined or random distance (e.g., a maximum or minimum distance) and/or until the occurrence of a specified event, e.g., activation of the obstacle-detection units **120** a predetermined number of times (collectively a transition condition).

A preferred embodiment of the robotic device **100** includes four escape behavioral modes: a Turn behavioral mode, an Edge behavioral mode, a Wheel Drop behavioral mode, and a Slow behavioral mode. One skilled in the art will appreciate that other behavioral modes can be utilized by the robotic device **100**. One or more of these behavioral modes may be implemented, for example, in response to a current rise in one of the electric motors **116**, **118** of the side brush assembly **140** or dual-stage brush assembly above a low or high stall threshold, forward bumper **106** in compressed position for determined time period, detection of a wheel-drop event.

In the Turn behavioral mode, the robotic device **100** turns in place in a random direction, starting at higher velocity (e.g., twice normal turning velocity) and decreasing to a lower velocity (one-half normal turning velocity), i.e., small panic turns and large panic turns, respectively. Low panic turns are preferably in the range of 45° to 90°, large panic turns are preferably in the range of 90° to 270°. The Turn behavioral mode prevents the robotic device **100** from becoming stuck on room impediments, e.g., high spot in carpet, ramped lamp base, from becoming stuck under room impediments, e.g., under a sofa, or from becoming trapped in a confined area.

In the Edge behavioral mode follows the edge of an obstacle unit it has turned through a predetermined number of degrees, e.g., 60°, without activation of any of the obstacle detection units **120**, or until the robotic device has turned through a predetermined number of degrees, e.g., 170°, since initiation of the Edge behavioral mode. The Edge behavioral mode allows the robotic device **100** to move through the smallest possible openings to escape from confined areas.

In the Wheel Drop behavioral mode, the microprocessor **135** reverses the direction of the main wheel drive assemblies **112**L, **112**R momentarily, then stops them. If the activated wheel drop sensor **124** deactivates within a predetermined time, the microprocessor **135** then reimplements the behavioral mode that was being executed prior to the activation of the wheel drop sensor **124**.

In response to certain events, e.g., activation of a wheel drop sensor **124** or a cliff detector **122**, the Slow behavioral mode is implemented to slowed down the robotic device **100** for a predetermined distance and then ramped back up to its normal operating speed.

When a safety condition is detected by the sensor subsystem, e.g., a series of brush or wheel stalls that cause the corresponding electric motors to be temporarily cycled off, wheel drop sensor **124** or a cliff detection sensor **122** activated for greater that a predetermined period of time, the robotic device **100** is generally cycled to an off state. In addition, an audible alarm may be generated.

The foregoing description of behavioral modes for the robotic device **100** are intended to be representative of the types of operating modes that can be implemented by the

robotic device **100**. One skilled in the art will appreciate that the behavioral modes described above can be implemented in other combinations and/or circumstances.

Debris Sensor

As shown in FIGS. **1-3**, in accordance with the present invention, an autonomous cleaning device (and similarly, a non-autonomous cleaning device as shown by way of example in FIG. **7**) can be improved by incorporation of a debris sensor. In the embodiment illustrated in FIGS. **1** and **3**, the debris sensor subsystem comprises left and right piezoelectric sensing elements **125**L, **125**R situated proximate to or within a cleaning pathway of a cleaning device, and electronics for processing the debris signal from the sensor for forwarding to a microprocessor **135** or other controller.

When employed in an autonomous, robot cleaning device, the debris signal from the debris sensor can be used to select a behavioral mode (such as entering into a spot cleaning mode), change an operational condition (such as speed, power or other), steer in the direction of debris (particularly when spaced-apart left and right debris sensors are used to create a differential signal), or take other actions.

A debris sensor according to the present invention can also be incorporated into a non-autonomous cleaning device. When employed in a non-autonomous cleaning device such as, for example, an otherwise relatively conventional vacuum cleaner **700** like that shown in FIG. **7**, the debris signal **706** generated by a piezoelectric debris sensor **704** PS situated within a cleaning or vacuum pathway of the device can be employed by a controlling microprocessor **708** in the body of the vacuum cleaner **702** to generate a user-perceptible signal (such as by lighting a light **710**), to increase power from the power system **703**, or take some combination of actions (such as lighting a "high power" light and simultaneously increasing power).

The algorithmic aspects of the operation of the debris sensor subsystem are summarized in FIG. **8**. As shown therein, a method according to the invention can include detecting left and right debris signals representative of debris strikes, and thus, of the presence, quantity or volume, and direction of debris (**802**); selecting an operational mode or pattern of movement (such as Spot Coverage) based on the debris signal values (**804**); selecting a direction of movement based on differential left/right debris signals (e.g., steering toward the side with more debris) (**806**); generating a user-perceptible signal representative of the presence of debris or other characteristic (e.g., by illuminating a user-perceptible LED) (**808**); or otherwise varying or controlling an operational condition, such as power (**810**).

A further practice of the invention takes advantage of the motion of an autonomous cleaning device across a floor or other surface, processing the debris signal in conjunction with knowledge of the cleaning device's movement to calculate a debris gradient (**812** in FIG. **8**). The debris gradient is representative of changes in debris strikes count as the autonomous cleaning apparatus moves along a surface. By examining the sign of the gradient (positive or negative, associated with increasing or decreasing debris), an autonomous cleaning device controller can continuously adjust the path or pattern of movement of the device to clean a debris field most effectively (**812**).

Piezoelectric Sensor: As noted above, a piezoelectric transducer element can be used in the debris sensor subsystem of the invention. Piezoelectric sensors provide instantaneous response to debris strikes and are relatively immune to accretion that would degrade the performance of an optical debris sensor typical of the prior art.

An example of a piezoelectric transducer **125**PS is shown in FIG. **4**A-**4**B. Referring now to FIG. **4**A-**4**B, the piezoelectric sensor element **125**PS can include one or more 0.20 millimeter thick, 20 millimeter diameter brass disks **402** with the piezoelectric material and electrodes bonded to the topside (with a total thickness of 0.51 mm), mounted to an elastomer pad **404**, a plastic dirt sensor cap **406**, a debris sensor PC board with associated electronics **408**, grounded metal shield **410**, and retained by mounting screws (or bolts or the like) **412** and elastomer grommets **414**. The elastomer grommets provide a degree of vibration dampening or isolation between the piezoelectric sensor element **125**PS and the cleaning device.

In the example shown in FIG. **4**A-**4**B, a rigid piezoelectric disk, of the type typically used as inexpensive sounders, can be used. However, flexible piezoelectric film can also be advantageously employed. Since the film can be produced in arbitrary shapes, its use affords the possibility of sensitivity to debris across the entire cleaning width of the cleaning device, rather than sensitivity in selected areas where, for example, the disks may be located. Conversely, however, film is at present substantially more expensive and is subject to degradation over time. In contrast, brass disks have proven to be extremely robust.

The exemplary mounting configuration shown in FIG. **4**A-**4**B is substantially optimized for use within a platform that is mechanically quite noisy, such as an autonomous vacuum cleaner like that shown in FIG. **3**. In such a device, vibration dampening or isolation of the sensor is extremely useful. However, in an application involving a non-autonomous cleaning device such as a canister-type vacuum cleaner like that shown in FIG. **7**, the dampening aspects of the mounting system of FIG. **4**A-**4**B may not be necessary. In a non-autonomous cleaning apparatus, an alternative mounting system may involve heat sing the piezoelectric element directly to its housing. In either case, a key consideration for achieving enhanced performance is the reduction of the surface area required to clamp, bolt, or otherwise maintain the piezoelectric element in place. The smaller the footprint of this clamped "dead zone", the more sensitive the piezoelectric element will be.

In operation, debris thrown up by the cleaning brush assembly (e.g., brush **94** of FIG. **3**), or otherwise flowing through a cleaning pathway within the cleaning device (e.g., vacuum compartment **104** of FIG. **3**) can strike the bottom, all-brass side of the sensor **125** PS (see FIG. **3**). In an autonomous cleaning device, as shown in FIG. **3**, the debris sensor **125** PS can be located substantially at an axis AX along which main brush **94** and flapper brush **92** meet, so that the particles **127** are thrown up and strike the sensor **125** PS with maximum force.

As is well known, a piezoelectric sensor converts mechanical energy (e.g., the kinetic energy of a debris strike and vibration of the brass disk) into electrical energy—in this case, generating an electrical pulse each time it is struck by debris—and it is this electrical pulse that can be processed and transmitted to a system controller (e.g., controller **135** of FIGS. **1** and **2** or **708** of FIG. **8**) to control or cause a change in operational mode, in accordance with the invention. Piezoelectric elements are typically designed for use as audio transducers, for example, to generate beep tones. When an AC voltage is applied, they vibrate mechanically in step with the AC waveform, and generate an audible output. Conversely, if they are mechanically vibrated, they produce an AC voltage output. This is the manner in which they are employed in the present invention. In particular,

when an object first strikes the brass face of the sensor, it causes the disk to flex inward, which produces a voltage pulse.

Filtering: However; since the sensor element **125**PS is in direct or indirect contact with the cleaning device chassis or body through its mounting system (see FIGS. **3** and **4**), it is subject to the mechanical vibrations normally produced by motors, brushes, fans and other moving parts when the cleaning device is functioning. This mechanical vibration can cause the sensor to output an undesirable noise signal that can be larger in amplitude than the signal created by small, low mass debris (such as crushed black pepper) striking the sensor. The end result is that the sensor would output a composite signal composed of lower frequency noise components (up to approximately 16 kHz) and higher frequency, possibly lower amplitude, debris-strike components (greater than 30 kHz, up to hundreds of kHz). Thus, it is useful to provide a way to filter out extraneous signals.

Accordingly, as described below, an electronic filter is used to greatly attenuate the lower frequency signal components to improve signal-to-noise performance. Examples of the architecture and circuitry of such filtering and signal processing elements will next be described in connection with FIGS. **5** and **6**.

Signal Processing

FIG. **5** is an exemplary schematic diagram of the signal processing elements of a debris sensor subsystem. As noted above, one purpose of a debris sensor is to enable an autonomous cleaning apparatus to sense when it is picking up debris or otherwise encountering a debris field. This information can be used as an input to effect a change in the cleaning behavior or cause the apparatus to enter a selected operational or behavioral mode, such as, for example, the spot cleaning mode described above when debris is encountered. In an non-autonomous cleaning apparatus like that shown in FIG. **7**, the debris signal **706** from the debris sensor **704** PS can be used to cause a user-perceptible light **710** to be illuminated (e.g., to signal to the user that debris is being encountered), to raise power output from the power until **703** to the cleaning systems, or to cause some other operational change or combination of changes (e.g., lighting a user-perceptible "high power" light and simultaneously raising power).

Moreover, as noted above, two debris sensor circuit modules (i.e., left and right channels like **125**L and **125**R of FIG. **1**) can be used to enable an autonomous cleaning device to sense the difference between the amounts of debris picked up on the right and left sides of the cleaning head assembly. For example, if the robot encounters a field of dirt off to its left side, the left side debris sensor may indicate debris hits, while the right side sensor indicates no (or a low rate of) debris hits. This differential output could be used by the microprocessor controller of an autonomous cleaning device (such as controller **135** of FIGS. **1** and **2**) to steer the device in the direction of the debris (e.g., to steer left if the left-side debris sensor is generating higher signal values than the right-side debris sensor); to otherwise choose a vector in the direction of the debris; or to otherwise select a pattern of movement or behavior pattern such as spot coverage or other.

Thus, FIG. **5** illustrates one channel (for example, the left-side channel) of a debris sensor subsystem that can contain both left and right side channels. The right side channel is substantially identical, and its structure and operation will therefore be understood from the following discussion.

As shown in FIG. **5**, the left channel consists of a sensor element (piezoelectric disk) **402**, an acoustic vibration filter/RFI filter module **502**, a signal amplifier **504**, a reference level generator **506**, an attenuator **508**, a comparator **510** for comparing the outputs of the attenuator and reference level generator, and a pulse stretcher **512**. The output of the pulse stretcher is a logic level output signal to a system controller like the processor **135** shown in FIG. **2**; i.e., a controller suitable for use in selecting an operational behavior.

The Acoustic Vibration Filter/RFI Filter block **502** can be designed to provide significant attenuation (in one embodiment, better than −45 dB Volts), and to block most of the lower frequency, slow rate of change mechanical vibration signals, while permitting higher frequency, fast rate of change debris-strike signals to pass. However, even though these higher frequency signals get through the filter, they are attenuated, and thus require amplification by the Signal Amplifier block **504**.

In addition to amplifying the desired higher frequency debris strike signals, the very small residual mechanical noise signals that do pass through the filter also get amplified, along with electrical noise generated by the amplifier itself, and any radio frequency interference (RFI) components generated by the motors and radiated through the air, or picked up by the sensor and its conducting wires. The signal amplifier's high frequency response is designed to minimize the amplification of very high frequency RFI. This constant background noise signal, which has much lower frequency components than the desired debris strike signals, is fed into the Reference Level Generator block **506**. The purpose of module **506** is to create a reference signal that follows the instantaneous peak value, or envelope, of the noise signal. It can be seen in FIG. **5** that the signal of interest, i.e., the signal that results when debris strikes the sensor, is also fed into this block. Thus, the Reference Level Generator block circuitry is designed so that it does not respond quickly enough to high frequency, fast rate of change debris-strike signals to be able to track the instantaneous peak value of these signals. The resulting reference signal will be used to make a comparison as described below.

Referring again to FIG. **5**, it will be seen that the signal from amplifier **504** is also fed into the Attenuator block. This is the same signal that goes to the Reference Level Generator **506**, so it is a composite signal containing both the high frequency signal of interest (i.e., when debris strikes the sensor) and the lower frequency noise. The Attenuator **508** reduces the amplitude of this signal so that it normally is below the amplitude of the signal from the Reference Level Generator **506** when no debris is striking the sensor element.

The Comparator **510** compares the instantaneous voltage amplitude value of the signal from the Attenuator **508** to the signal from the Reference Level Generator **506**. Normally, when the cleaning device operating is running and debris are not striking the sensor element, the instantaneous voltage coming out of the Reference Level Generator **506** will be higher than the voltage coming out of the Attenuator block **508**. This causes the Comparator block **510** to output a high logic level signal (logic one), which is then inverted by the Pulse Stretcher block **512** to create a low logic level (logic zero).

However, when debris strikes the sensor, the voltage from the Attenuator **508** exceeds the voltage from the Reference Level Generator **506** (since this circuit cannot track the high frequency, fast rate of change signal component from the Amplifier **504**) and the signal produced by a debris strike is higher in voltage amplitude than the constant background

mechanical noise signal which is more severely attenuated by the Acoustic Vibration Filter **502**. This causes the comparator to momentarily change state to a logic level zero. The Pulse Stretcher block **512** extends this very brief (typically under 10-microsecond) event to a constant 1 millisecond (+0.3 mS, −0 mS) event, so as to provide the system controller (e.g., controller **135** of FIG. **2**) sufficient time to sample the signal.

When the system controller "sees" this 1-millisecond logic zero pulse, it interprets the event as a debris strike.

Referring now to the RFI Filter portion of the Acoustic Vibration Filter/RFI Filter block **502**, this filter serves to attenuate the very high frequency radiated electrical noise (RFI), which is generated by the motors and motor driver circuits.

In summary, the illustrated circuitry connected to the sensor element uses both amplitude and frequency information to discriminate a debris strike (representative of the cleaning device picking up debris) from the normal background mechanical noise also picked up by the sensor element, and the radiated radio frequency electrical noise produced by the motors and motor driver circuits. The normal, though undesirable, constant background noise is used to establish a dynamic reference that prevents false debris-strike indications while maintaining a good signal-to-noise ratio.

In practice, the mechanical mounting system for the sensor element (see FIG. **4**) is also designed to help minimize the mechanical acoustic noise vibration coupling that affects the sensor element.

Signal Processing Circuitry: FIG. **6** is a detailed schematic diagram of exemplary debris sensor circuitry. Those skilled in the art will understand that in other embodiments, the signal processing can be partially or entirely contained and executed within the software of the microcontroller **135**. With reference to FIG. **6**, the illustrated example of suitable signal processing circuitry contains the following elements, operating in accordance with the following description:

The ground referenced, composite signal from the piezoelectric sensor disk (see piezoelectric disk **402** of FIG. **4**) is fed into the capacitor C**1**, which is the input to the 5-pole, high pass, passive R-C filter designed to attenuate the low frequency, acoustic mechanical vibrations conducted into the sensor through the mounting system. This filter has a 21.5 kHz, −3 dB corner frequency rolling off at −100 dB/Decade. The output of this filter is fed to a signal pole, low pass, passive R-C filter designed to attenuate any very high frequency RFI. This filter has a 1.06 MHz, −3 dB corner frequency rolling off at −20 dB/Decade. The output of this filter is diode clamped by D**1** and D**2** in order to protect U**1** from high voltage transients in the event the sensor element sustains a severe strike that generates a voltage pulse greater than the amplifier's supply rails. The DC biasing required for signal-supply operation for the amplifier chain and subsequent comparator circuitry is created by R**5** and R**6**. These two resistor values are selected such that their thevenin impedance works with C**5** to maintain the filter's fifth pole frequency response correctly.

U**1**A, U**1**B and their associated components form a two stage, ac-coupled, non-inverting amplifier with a theoretical AC gain of 441. C**9** and C**10** serve to minimize gain at low frequencies while C**7** and C**8** work to roll the gain off at RFI frequencies. The net theoretical frequency response from the filter input to the amplifier output is a single pole high pass response with −3 dB at 32.5 kHz, −100 dB/Decade, and a 2-pole low pass response with break frequencies at 100 kHz, −32 dB/Decade, and 5.4 MHz, −100 dB/Decade, together forming a band-pass filter.

The output from the amplifier is split, with one output going into R**14**, and the other to the non-inverting input of U**1**C. The signal going into R**14** is attenuated by the R**14**-R**15** voltage divider, and then fed into the inverting input of comparator U**2**A. The other signal branch from the output of U**1**B is fed into the non-inverting input of amplifier U**1**C. U**1**C along with U**1**D and the components therebetween (as shown in FIG. **2**) form a half-wave, positive peak detector. The attack and decay times are set by R**13** and R**12**, respectively. The output from this circuit is fed to the non-inverting input of U**2**A through R**16**. R**16** along with R**19** provide hysteresis to improve switching time and noise immunity. U**2**A functions to compare the instantaneous value between the output of the peak detector to the output of the R**14**-R**15** attenuator.

Normally, when debris is not striking the sensor, the output of the peak detector will be greater in amplitude than the output of the attenuator network. When debris strikes the sensor, a high frequency pulse is created that has a higher amplitude coming out of the front-end high pass filter going into U**1**A than the lower frequency mechanical noise signal component. This signal will be larger in amplitude, even after coming out of the R**14**-R**15** attenuator network, than the signal coming out of the peak detector, because the peak detector cannot track high-speed pulses due to the component values in the R**13**, C**11**, R**12** network. The comparator then changes state from high to low for as long as the amplitude of the debris-strike pulse stays above the dynamic, noise generated, reference-level signal coming out of the peak detector. Since this comparator output pulse can be too short for the system controller to see, a pulse stretcher is used.

The pulse stretcher is a one-shot monostable design with a lockout mechanism to prevent re-triggering until the end of the timeout period. The output from U**2**A is fed into the junction of C**13** and Q**1**. C**13** couples the signal into the monostable formed by U**2**C and its associated components. Q**1** functions as the lockout by holding the output of U**2**A low until the monostable times out. The timeout period is set by the time constant formed by R**22**, C**12** and R**18**, and the reference level set by the R**20**-R**21** voltage divider. This time can adjusted for 1 mS, +0.3 mS, −0.00 mS as dictated by the requirements of the software used by the controller/processor.

Power for the debris sensor circuit is provided by U**3** and associated components. U**3** is a low power linear regulator that provides a 5-volt output. The unregulated voltage from the robot's onboard battery provides the power input

When required, circuit adjustments can be set by R**14** and R**12**. These adjustments will allow the circuit response to be tuned in a short period of time

In a production device of this kind, it is expected that power into, and signal out of the debris sensor circuit printed circuit board (PCB) will be transferred to the main board via shielded cable. Alternatively, noise filters may be substituted for the use of shielded cable, reducing the cost of wiring. The cable shield drain wire can be grounded at the sensor circuit PCB side only. The shield is not to carry any ground current. A separate conductor inside the cable will carry power ground. To reduce noise, the production sensor PCB should have all components on the topside with solid ground plane on the bottom side. The sensor PCB should be housed in a mounting assembly that has a grounded metal shield that covers the topside of the board to shield the components

from radiated noise pick up from the robot's motors. The piezoelectric sensor disk can be mounted under the sensor circuit PCB on a suitable mechanical mounting system, such as that shown in FIG. **4**, in order to keep the connecting leads as short as possible for noise immunity.

The debris sensor is not subject to degradation by accretion of debris, but is capable of instantaneously sensing and responding to debris strikes, and thus immediately responsive to debris on a floor or other surface to be cleaned, with reduced sensitivity to variations in airflow, instantaneous power, or other operational conditions of the cleaning device.

When employed as described herein, the debris sensor and/or control system enables an autonomous cleaning device to control its operation or select from among operational modes, patterns of movement or behaviors responsive to detected debris, for example, by steering the device toward "dirtier" areas based on signals generated by the debris sensor.

The debris sensor can also be employed in non-autonomous cleaning devices to control, select or vary operational modes of either an autonomous or non-autonomous cleaning apparatus.

In addition, the disclosed signal processing architecture and circuitry is particularly useful in conjunction with a piezoelectric debris sensor to provide high signal to noise ratios.

A wide range of modifications and variations of the present invention are possible and within the scope of the disclosure. The debris sensor can also be employed for purposes, and in devices, other than those described herein.

Navigational Control System

FIG. **9** is a schematic representation of a navigational control system **10** according to the present invention for use in combination with a robotic device **100** to enhance the cleaning efficiency thereof by adding a deterministic component (in the form of a control signal that remotely controls the movement of the robotic device **100**) to the motion algorithms, including random motion, autonomously implemented by the robotic device **100**. The navigational control system **10** comprises a transmitting subsystem **12** and a receiving subsystem **20** operating under the direction of a navigation control algorithm. The navigation control algorithm includes a definition of a predetermined triggering event. The specific features and characteristics of the transmitting subsystem **12** and the receiving subsystem **20** depend upon whether the particular subsystem is integrated in combination with the robotic device **100** or functions as a "base station" for the navigational control system **10**.

Broadly described, the navigational control system **10** according to the present invention is operative, under the direction of the navigation control algorithm, to monitor the movement activity of the robotic device **100** within the defined working area. In one preferred embodiment, the monitored movement activity is defined in terms of the "position history" of the robotic device **100** as described in further detail below. In another preferred embodiment, the monitored movement activity is defined in terms of the "instantaneous position" of the robotic device **100** as defined in further detail below.

The predetermined triggering event is a specific occurrence or condition in the movement activity of the robotic device **100**. Upon the realization of the predetermined triggering event, the navigational control system **10** is operative to generate and communicate a control signal to the robotic device **100**. In response to the control signal, the robotic device **100** is operative to implement or execute a conduct prescribed by the control signal, i.e., the prescribed conduct. This prescribed conduct represents a deterministic component of the movement activity of the robotic device **100**.

In the preferred embodiment of the navigational control system **10** based upon position history, the system **10** is configured and operative to create a "tessellation" of any defined working area where the robotic device **100** is to be operated, e.g., a room to be cleaned. Tessellate is used herein in the sense that the defined working area is segmented into a set of individual cells, which may or may not be of equal size. For example, FIG. **10** exemplarily illustrates the polar tessellation of a defined working area into a set of individual cells C (reference characters BST identify the "base station") of unequal size. The position of each cell C (in terms of its center) is identified in terms of polar coordinates (r,θ) referenced to the base station BST as the origin (0, 0). A grid map of the cells C comprising the defined working area is stored in memory of the navigation control system **10**. One skilled in the art will appreciate that other coordinate systems, e.g., a planar Cartesian coordinate system, can be used by the navigational control system **10** to define the position of individual cells C within the predetermined working area.

Preferably, the navigational control system **10** is operative to define the size the individual cells C so that the length and width dimensions of an individual cell C are no larger than one-half the width (W) of the cleaning head system **145** of the robotic device **100** (see FIG. **1** and corresponding discussion above).

The navigational control system **10** is operative to generate a position history of the robotic device **100** within the defined working area in terms of such individual cells C (to minimize the memory requirements for storage of position history). The position history comprises a set of discrete, instantaneous positions (in terms of individual cells C) of the robotic device **100** over a time interval where the time interval is a variable that depends upon the "triggering condition" of the navigation control algorithm implemented by the navigational control system **10**.

Each discrete instantaneous position of the robotic device **100** is determined by operating the transmitting subsystem **12** to emit a set of directional beams and operating the receiving subsystem **20** to detect one or more of such directional beams and process a signal parameter of the detected beam(s) to determine an absolute bearing parameter and a distance parameter between the transmitting subsystem **12** and the receiving subsystem **20** at a point in time. Each pair of bearing, distance parameters establishes a discrete instantaneous position for the robotic device **100**. For the preferred 'position history' embodiment, the navigational control system **10** is operative to correlate each discrete instantaneous position to one individual cell C of the grid map. A set of bearing and position pairs, i.e., a set of instantaneous positions, over a time interval defines a set of cells C, which are identified in the receiving subsystem **20** as the position history of the robotic device **100** for the time interval.

In the preferred embodiment of the navigational control system **10** based upon the instantaneous position, the system **10** processes each discrete instantaneous position as it is established, under the control of the navigation control algorithm, to determine whether such discrete instantaneous position is the predetermined triggering event defined by the navigation control algorithm.

In an advanced embodiment of the navigational control system **10**, the system **10** is additionally configured and operative to determine a travel vector (indicating the direc-

tion of motion of the robotic device **100** within an individual cell C or at the discrete instantaneous position) at each point in time. These travel vectors may be stored in memory in conjunction with the corresponding cells C as a component of the position history of the robotic device **100**.

The navigational control system **10** according to the present invention is further operative, under direction of the navigational control algorithm, to generate and communicate a control signal to the robotic device **100** whenever the navigational control system **100** realizes the predetermined triggering event. In response to any such control signal, the robotic device **100** is configured and operative to initiate a prescribed conduct. The prescribed conduct comprises the deterministic component added to the random motion movement activity of the robotic device **100** by means of the navigational control system **10** according to the present invention.

In one preferred embodiment of the invention, the prescribed conduct of the robotic device **100** comprises one or more basic maneuvers such as CW and CCW turns, forward or aft (straight line) movement, slow down, speed up, and stop. The CW and/or CCW turns can be implemented using the turning techniques of the robotic device **100** described above, and the turn angles can be, for example, over a 360° spectrum at predetermined intervals, e.g., 5° or 10°. Alternatively, or in addition to, the CW and/or CCW turns can be to a specified azimuthal heading (referenced to the base station as the origin) where the navigational control system **10** is configured and operative so that the travel vector is a determinable variable. Of these basic maneuvers, forward (straight line) movement is typically the default maneuver that the robotic device **100** automatically reverts to (implements) once one or more of the other basic maneuvers has been completed.

In another preferred embodiment of the invention, the prescribed conduct of the robotic device **100** comprises one or more of the behavioral modes described herein. In yet a further preferred embodiment of the invention, the prescribed conduct of the robotic device **100** comprises a combination of the basic maneuvers and the behavioral modes described herein.

The transmitting subsystem **12** is operative to transmit a number of directed beams having a predetermined emission pattern along a specific propagation axis. Preferably, the directed beams are planar, i.e., substantially parallel to the surface of the defined working area.

In preferred embodiments of the navigational control system **10** according to the present invention, the transmitting subsystem **12** is integrated in combination with the robotic device **100**. The transmitting subsystem **12** is configured and operative to functionally emulate an omnidirectional transmission source with respect to the defined working area, i.e., by emitting a plurality of directed beams that cover the defined working area. For these preferred embodiments, the robotic device **100** further includes a receiver unit **16** (see FIG. **9**) configured and operative to receive control signals from the receiving subsystem **20** (see discussion below regarding the transmitting unit **32** of the receiving subsystem **20**). While the receiver unit **16** is depicted as a dedicated receiving unit for the control signals, it is preferable that the omnidirectional detector **128** (of the virtual wall detection system) described above be adapted to detect and process such control signals.

In one preferred embodiment, the transmitting subsystem **12** comprises a conventional mechanical sweeping transmitter, e.g., a laser, that is integrated in combination with a high point of the housing infrastructure of the robotic device **100** so that none of the structural features of the robotic device **100** interfere with the operation thereof. The mechanical sweeping transmitter is configured and operative to emit the plurality of directed beams while concomitantly redirecting (mechanically sweeping) the transmitting element so that each directed beam has a different propagation axis. Other features and characteristics of the mechanical sweeping transmitter are described below in terms of individual transmitting units $\mathbf{14}_N$ for ease of description.

Another preferred embodiment of the transmitting subsystem **12** comprises a set of transmitting units $\mathbf{14}_N$, where N is an integer defining the number of individual transmitting units comprising the set for the navigational control system **10**, that are integrated in combination with the robotic device **100** about the periphery of its housing infrastructure. Each transmitting unit $\mathbf{14}_N$ is configured and operative to emit a directed beam having a predetermined emission pattern along a specific propagation axis. Preferably, the transmitting subsystem **12** is configured and operative so that the emitted directed beams are planar.

In a basic embodiment of the transmitting subsystem **12**, the transmitting units $\mathbf{14}_N$ are fungible/interchangeable, each operating to emit a directed beam at a common operating frequency. Preferably, the common operating frequency for the transmitting units $\mathbf{14}_N$ lies in the infrared range, i.e., about 750 nm to about 1.4×10^4 nm, preferably about 880 nm to about 980 nm, although one skilled in the art will appreciate that other wavelengths, e.g., in the radio frequency range, microwave frequency range, can be used in the practice of the navigational control system **10** of the present invention.

Preferably, the common operating frequency directed beams emitted by the transmitting units $\mathbf{14}_N$ are periodically modulated, e.g., at 10 KHz for 50 msec, off for 300 msec. Modulation of the directed beams facilitates detection thereof by the receiving subsystem **20**, i.e., the receiving subsystem **20** is able to readily discriminate between modulated directed beams emitted by the transmitting subsystem **12** and any other electromagnetic radiation sources that may be active in the defined working area, e.g., television remote control units, wireless computer keyboards, microwaves, ambient radiation such as sunlight. For the basic embodiment, it is also preferable that the transmitting units $\mathbf{14}_N$ be sequentially operated so that any transmitting unit $\mathbf{14}_N$ is cycled on for a predetermined period of time and then cycled off, the next (adjacent) transmitting unit $\mathbf{14}_N$ is then cycled on for the predetermined period of time and cycled off, and so forth. Operating the transmitting subsystem **12** in the foregoing manner, i.e., modulation of the directed beam, cycling transmitting units $\mathbf{14}_N$ on/off sequentially, minimizes the power requirements of the transmitting subsystem **12** and reduces spurious noise/collateral energy that could adversely impact the functioning of the navigational control system **10**.

Ordinarily, a navigational control system **10** employing the basic embodiment of the transmitting subsystem **12**, i.e., all transmitting units $\mathbf{14}_N$ are interchangeable-emitting directed beams at a common operating frequency, cannot be used to determine travel vectors for the robotic device **100** because the receiving subsystem **20** cannot differentiate between directed beams emitted by the transmitting units $\mathbf{14}_N$ and therefore cannot identify any particular transmitting unit $\mathbf{14}_N$. However, the inventors have developed two innovative ways of transmitting and processing directed beams emitted by a transmitting subsystem **12** comprised of interchangeable transmitting units $\mathbf{14}_N$ so that the receiving subsystem **20** can individually identify a specific inter-

changeable transmitting unit 14_N, and, based upon such identification, establish a travel vector for the robotic device **100**.

Accordingly, in one enhanced version of the basic embodiment of the transmitting subsystem **12**, interchangeable transmitting units 14_N are operated in a predetermined manner that allows the receiving subsystem **20** to process detected directed beams to identify the directed beam having the highest signal strength, which, in turn, allows the receiving subsystem **20** to identify the interchangeable transmitting unit 14_N that emitted such directed beam. This, in turn, allows the receiving subsystem **20** to determine the orientation and, hence the travel vector, of the robotic device **100**.

Referring to FIG. **11**A, the transmitting subsystem **12** is first cycled on so that all transmitting units 14_N emit directed beams for a predetermined synchronization period, as identified by reference character t_{SY}, and then cycled off. The receiver subsystem **20** is operative to detect and process one or more of the directed beams emitted by the transmitting units 14_N and identify the predetermined synchronization period t_{SY} of the transmitting subsystem **12**. This identification allows the receiving subsystem **20** to synchronize operations between the transmitting subsystem **12** and the receiving subsystem **20** by initializing a timing sequence at the end of the predetermined synchronization period t_{SY} (reference character t_0 identifies the initialization of the timing sequence in FIG. **11**A).

The transmitting subsystem **12** is further operative so that individual transmitting unit 14_N are sequentially cycled on and off at predetermined times with respect to the timing sequence initialization t_0 established by the receiving subsystem **20**. For example, with respect to FIG. **11**A, which illustrates a transmitting subsystem **12** comprising four transmitting units 14_N (arbitrarily identified as the first transmitting unit 14_1, the second transmitting unit 14_2, the third transmitting unit 14_3, and the fourth transmitting unit 14_4), the transmitting subsystem **12** is configured and operative so that each of the transmitting units 14_1, 14_2, 14_3, 14_4 is sequentially cycled on to emit a directed beam that transitions from a zero (0) signal strength to a peak signal strength to a zero (0) signal strength and then cycled off (a saw-tooth transition pattern is exemplarily illustrated in FIG. **11**A—one skilled in the art will appreciate that other types of signal strength transition patterns can be used in the practice of the invention described herein, e.g., a ramped signal strength).

That is, the first transmitting unit 14_1 is cycled on and transitions to a peak signal strength at time t_1. The second transmitting unit 14_2 is cycled on as the directed beam from the first transmitting unit 14_1 achieves its peak signal strength at time t_1. The second transmitting unit 14_2 transitions to a peak signal strength at time t_2, at which point the first transmitting unit 14_1 has transitioned to a zero (0) signal strength and is cycled off. The third transmitting unit 14_3 is cycled on as the directed beam from the second transmitting unit 14_2 achieves its peak signal strength at time t_2. The foregoing operating pattern is repeated for the second, third, and fourth transmitting units 14_2, 14_3, 14_4, as applicable, so that at time t_3 the second transmitting unit 14_2 is cycled off, the directed beam emitted by the third transmitting unit 14_3 has achieved its peak signal strength, and the fourth transmitting unit 14_4 is cycled on; and at time t_4 the third transmitting unit 14_3 is cycled off and the directed beam emitted by the fourth transmitting unit 14_4 has achieved its peak strength. The transmitting subsystem **12** is operative to repeat the above-described synchronization—sequential transmission procedure during operation of the navigational control system **12** according to the present invention.

In another enhanced version of the basic embodiment of the transmitting subsystem **12**, interchangeable transmitting units 14_N are operated in a different predetermined manner that allows the receiving subsystem **20** to process detected directed beams to identify the directed beam having the highest signal strength, which, in turn, allows the receiving subsystem **20** to identify the interchangeable transmitting unit 14_N that emitted such directed beam. This, in turn, allows the receiving subsystem **20** to determine the orientation and, hence the travel vector, of the robotic device **100**.

Referring to FIG. **11**C, the transmitting subsystem **12** is first cycled on so that all transmitting units 14_N emit directed beams for a predetermined synchronization period, as identified by reference character t_{12}, and then cycled off. The receiver subsystem **20** is operative to detect and process one or more of the directed beams emitted by the transmitting units 14_N and identify the predetermined synchronization period t **12** of the transmitting subsystem **12**. This identification allows the receiving subsystem **20** to synchronize operations between the transmitting subsystem **12** and the receiving subsystem **20** by initializing a timing sequence at the end of the predetermined synchronization period t_{SY} (reference character t_0 identifies the initialization of the timing sequence in FIG. **11**A).

The transmitting subsystem **12** is further operative so that individual transmitting unit 14_N are sequentially cycled on and off at predetermined times with respect to the timing sequence initialization t_0 established by the receiving subsystem **20**. For example, with respect to FIG. **11**C, which illustrates a transmitting subsystem **12** comprising four transmitting units 14_N (arbitrarily identified as the first transmitting unit 14_1, the second transmitting unit 14_2, the third transmitting unit 14_3, and the fourth transmitting unit 14_4), the transmitting subsystem **12** is configured and operative so that each of the transmitting units 14_1, 14_2, 14_3, 14_4 is sequentially cycled on to emit a pulsed directed beam have a predetermined pulse width P_1, P_2, P_3, P_4, respectively, at a predetermined signal strength, and then cycled off.

That is, the first transmitting unit 14_1 is cycled on at t_{11} (where the first "1" identifies the transmitting unit number and the second "1" indicates that the transmitting unit is cycled on) and cycled off at t_{12} (where the "2" indicates that the transmitting unit is cycled off). In a similar manner, the second transmitting unit 14_2 is cycled on at t_{21} and cycled off at t_{22}, the third transmitting unit 14_3 is cycled on at t_{31} and cycled off at t_{32}, and fourth transmitting units 14_4 is cycled on at t_{41} and cycled off at t_{42}. The transmitting subsystem **12** is operative to repeat the above-described synchronization-sequential transmission procedure during operation of the navigational control system **12** according to the present invention.

In a more sophisticated embodiment of the transmitting subsystem **12**, the transmitting units 14_N are discrete and identifiable, each transmitting unit 14_N operating at a unique operating frequency to emit a directed beam (which is preferably planar with respect to the surface of the defined working area) having a predetermined emission pattern along a specific propagation axis. These operating frequencies are also preferably modulated to facilitate detection thereof by the receiving subsystem **20** in an environment where other electromagnetic radiation sources are operating. Since each directed beam is readily and uniquely identifiable, the receiving subsystem **20** can process detected directed beams in a conventional manner to derive not only

the absolute bearing and to the robotic device **100**, but also the travel vector for the robotic device **10** at any particular time.

The receiving subsystem **20** of the navigational control system **10** according to the present invention comprises a processing unit **22** that includes a microprocessor **24**, a signal processing unit **26**, a memory module **28**, and a set of detection units $\mathbf{30}_M$. Additionally, the receiving subsystem **20** can also include a transmitting unit **32** for those preferred embodiments of the navigational control system **10** wherein the receiving subsystem **20** is operated or functions as the base station for the navigational control system **10**.

The memory module **28** comprises RAM **28**A and ROM **28**B. Data relating to the current operation of the robotic device **100** within the defined working area is stored in the RAM **28**A. Such current operational data can include the grid map of cells C defining the defined working area and the position history of the robotic device **100** within the defined working area for the 'position history' embodiment of the navigational control system **10**. Stored in the ROM **28**B are one or more navigation control algorithms for the navigational control system **10**, a set of one or more control signals associated with each navigation control algorithm, and a signal processing algorithm for converting signals generated by the signal processing unit **26** to one or more sets of instantaneous position parameters, i.e., a bearing, distance pair (and travel vector, if applicable). For the 'position history' embodiment of the system **10**, a set of instantaneous position parameters that define the position history of the robotic device **100**, which are correlated with the grid map to identify the cells C comprising the position history.

The terminology "navigation control algorithm" as used herein encompasses a set of instructions that: (a) define how the position history or instantaneous position is used by the navigational control system **10** (e.g., counting and comparing cells visited, a true-false determination for cells visited, true-false determination whether the predetermined triggering event has occurred); (b) defines the triggering event or events associated with the use of the position history or the instantaneous position; and (c) identifies the control signal(s) to be implemented when the triggering event is realized. For example, in one representative navigation control algorithm for the 'position history' embodiment of the navigational control system **10** according to the present invention, the microprocessor **24** is operative to count and store the number of visits to each cell and to compute the total number of visits to cells contiguous to (neighboring) each such visited cell (cell counting). The microprocessor **24** is further operative to compare the total number of neighboring-cell visits as each cell is visited to a threshold value (see, e.g., FIG. **10** wherein "C_V" identifies a visited cell and "C_C" identifies the eight (8) cells contiguous to the visited cell C_V). If the total number of neighboring-visits (e.g., fifteen (15) in the example of FIG. **10**) for any visited cell is below the threshold number (the triggering event), the microprocessor **24** is operative to cause a control signal to be communicated to the robotic device **100**. The control signal causes the robotic device **100** to implement one or more behavioral modes specified by the control signal, e.g., a Spot Coverage pattern as described above.

In another representative navigation control algorithm for the 'position history' embodiment of the navigational control system **10** of the present invention, one or more cells in the stored grid map are pre-identified (i.e., prior to operating the robotic device **100**) as "hot spots" in the defined working area. As the robotic device **100** visits any particular cell C, the microprocessor **24** is operative to determine whether the visited cell has been identified as a "hot spot" (true-false determination). If the microprocessor **24** determines that the visited cell C is a "hot spot" (triggering event), the microprocessor **24** is operative to cause a control signal to be communicated to the robotic device **100** via the control signal transmitting unit **32**. Reception of the control signal causes the robotic device **100** to implement the prescribed conduct specified by the control signal, e.g., one or more of the basic maneuvers described above and/or a Spot Coverage pattern or Obstacle-Following behavioral mode as described above.

The foregoing representative examples of navigation control algorithms for the 'position history' embodiment of the navigational control system **10** according to the present invention are implemented without knowledge of the travel vector of the robotic device **100**, i.e., based solely upon the identification of visited cells by means of the bearing, distance parameters derived by the receiving subsystem **20**. Another representative example of a navigation control algorithm for the 'position history' embodiment of the navigation control system **10** of the present invention utilizes the travel vector as an element of the position history in issuing a control signal.

The microprocessor **24** is operative to count and store the number of times a cell has been visited (cell counting) and further operative to compare this number to the number of times each contiguous (or neighboring) cell has been visited. For this navigation control algorithm, the triggering event is a numerical differential between the number of visits to the currently-visited cell number and the number of visits to each of the neighboring-cells that identifies the neighboring cell or cells that have been least-visited as compared to the currently-visited cell. The triggering event would cause the receiving system **20** to issue a control signal to the robotic device **100** that causes the robotic device **100** to move from the currently-visited cell to the neighboring cell that has been visited least, e.g., by implementing one or more basic maneuvers as described herein. If two or more neighboring cells have been visited least, the control signal would cause the robotic device to move from the currently-visited cell to the least visited neighboring cell that is most compatible with the current travel vector of the robotic device **100**, e.g., minimum travel distance.

Using FIG. **10** as an example wherein "C_V" identifies the currently-visited cell and "C_C" identifies the eight (8) cells contiguous to or neighboring the currently-visited cell C_V, the neighboring cells C_C that have been visited a single time are the least-visited neighboring cells C_C. If the current travel vector for the robotic device **100** is indicated by the reference characters TV, the control signal would cause the robotic device **100** to continue moving in a straight line, i.e., the move forward basic maneuver (or the Straight-Line behavioral mode) would be executed by the robotic device **100** (if the robotic device **100** was currently operating in some other behavioral mode).

One representative navigation control algorithm for the 'instantaneous position' of the navigational control system **10** uses elapsed time (either random or predetermined) as the predetermined triggering event to cause the robotic device **10** to move to a predetermined position B in the defined working environment. The microprocessor **24** is operative, upon expiration of the elapsed time (the predetermined triggering event), to determine the instantaneous position (hereinafter identified as "position A") of the robotic device **100** as described herein. Since position A is an unknown variable until the predetermined triggering event is realized, the prescribed conduct, i.e., the basic maneuvers, necessary

to move the robotic device **100** from position A to position B are also unknown. Once position A has been determined by the navigational control system **10**, the basic maneuvers necessary to move the robotic device **100** from position A to position B are determinable since both position A and position B are known variables (in terms of their known bearing, distance parameter pairs with respect to the receiving subsystem **20**). A determination of the basic maneuvers that will be implemented by the robotic device **100** can be accomplished by any conventional computational technique.

Another exemplary navigation control algorithm for the 'instantaneous position' embodiment of the navigational control system **10** is a variation of the "hot spot" navigation control algorithm for the 'position history' embodiment of the navigational control system **10**. In this illustrative embodiment, both position A and position B are known variables and accordingly, the basic maneuver(s) to move the robotic device **100** from position A to position B are known. In this example, the predetermined triggering event is a TRUE determination that the instantaneous position of the robotic device **100** is equal to position A (position A may be stored in memory **28** as a "zone"—defining some arbitrary area centered about position A—rather than a single point position to increase the probability that the instantaneous position of the robotic device **100** at some time will equal position A).

The receiving subsystem **20** comprises a set of detection units $\mathbf{30}_M$ where M is an integer defining the number of individual detection units comprising the set for the navigational control system **10**. The number and positioning of the set of detection units $\mathbf{30}_M$ should be such that as much of the defined working area as possible is within the field-of-view of the receiving subsystem **20** and that the fields-of-view of at least two (but preferably more) detection units $\mathbf{30}_M$ cover the same area within the defined working area.

In preferred embodiments of the navigational control system **10** according to the present invention, the receiving subsystem **20** functions as a "base station" for the system **10**. In this functional role, the receiving subsystem **20** is a portable, standalone unit that is stationarily positioned within the defined working area, preferably abutting a wall bounding the defined working area (the 'wall unit' configuration). Alternatively, the receiving subsystem **20** can be positioned within the defined working area distally of the walls bounding the defined working area (the 'free-standing' configuration). The receiving subsystem **20** as the base station establishes and, for the 'position history' embodiment of the navigational control system **10**, stores the grid map of cells representing the defined working area and represents the origin (0, 0) of the grid map of cells described above.

For those embodiments where the receiving subsystem **20** is operated as a wall unit configuration, the individual detection units $\mathbf{30}_M$ have a known spaced-apart relationship and configured and operative to have a 180° field-of-view. For example, FIG. **2** illustrates an embodiment of the receiving subsystem **20** comprising two detection units $\mathbf{30}_M$ (M=2) spaced apart by a known angular distance "φ". FIG. **12**C illustrates another embodiment of the receiving subsystem **20** comprising three detection units $\mathbf{30}_M$ (M=3), i.e., $\mathbf{30}_{12}$, $\mathbf{30}_{23}$, $\mathbf{30}_{13}$, having known angular separations identified by "φ_{12}", "φ_{23}", and "φ_{13}", respectively. Preferred embodiments of the wall unit configuration for the navigational control system **10** include three detection units $\mathbf{30}_M$ to provide absolute bearing data to the robotic device **100**. A minimum of two detection units $\mathbf{30}_M$ are required to provide the necessary signal information for the receiving subsystem **20**. More than three detection units $\mathbf{30}_M$ can be employed to increase the resolution of the receiving subsystem **20**, but at an added cost for each additional detection unit $\mathbf{30}_M$ and associated signal processing circuitry (see FIG. **12**C which illustrates the representative signal processing circuitry associated with a detection unit $\mathbf{30}_M$).

For those embodiments where the receiving subsystem **20** is operated as a free-standing configuration, the individual detection units $\mathbf{30}_M$ likewise spaced apart by known angular distances and configured and operative have a field-of-view greater than 180°. A representative embodiment of the receiving subsystem **20** operated as a free-standing base station would comprise four detection units $\mathbf{30}_M$.

The detection units $\mathbf{30}_M$ are configured and operative to detect a parameter of one or more of the directed beams emitted by the transmitting units $\mathbf{14}_N$, e.g., voltages V representing the relative signal strengths of the detected directed beam(s). In a preferred embodiment, each detection unit $\mathbf{30}_M$ is configured and operative to average the detected signal strength parameter (e.g., voltage) when the detection unit $\mathbf{30}_M$ detects two directed beams simultaneously. The receiving subsystem **20** executes a signal processing algorithm that processes the detected parameters provided by the detection units $\mathbf{30}_M$, i.e., relative signal strengths of the detected beams, utilizing a conventional technique to determine the absolute bearing between the robotic device **100** and the receiving subsystem **20**.

To provide the distance determination capability for the receiving subsystem **20**, the receiving subsystem **20** is preferably calibrated prior to use. This involves positioning the robotic device **100** at a predetermined distance from the receiving subsystem **20** and operating one (or more) of the transmitting units $\mathbf{14}_N$ to emit a directed beam at the receiving subsystem **20**. The parameter of the directed beam detected by the detection units $\mathbf{30}_M$, e.g., a voltage representing the signal strength of the directed beam as detected, is correlated to the predetermined distance and used to generate a look-up table of signal strength versus distance for the defined working area. This look-up table is stored in the memory module **28** of the receiving subsystem **20**. As the signal strengths of directed beams are detected during operation of the navigational control system **10**, the receiving subsystem **20** uses the detected signal strengths as pointers to the stored look-up table to determine the corresponding distances (between the receiving subsystem **20** and the robotic device **100**).

Alternatively, the receiving subsystem **20** could be configured and operative to implement a signal processing algorithm that utilizes the known attenuation characteristics, i.e., signal strength versus distance, of the operating frequency of the directed beams emitted by the transmitting units $\mathbf{14}_N$. This embodiment presupposes that the transmitting units $\mathbf{14}_N$ are rated and emitting directed beams of known signal strength.

For the sophisticated embodiment of the navigational control system **10** according to the present invention described above wherein the individual transmitting units $\mathbf{14}_N$ of the transmitting subsystem **12** are operated at a unique operating frequency, the detection units $\mathbf{30}_M$ of the receiving subsystem **20** are configured to scan the set of unique operating frequencies utilized by the transmitting units $\mathbf{14}_N$. The receiving subsystem **20** is configured and operative to cause the detection units $\mathbf{30}_M$ to sequentially scan through these frequencies during operation of the navigational control system **10**.

For the innovative embodiment of the transmitting subsystem **12** described above in connection with FIG. **11**A,

FIG. **11**B illustrates the operating characteristics of the complementary receiving subsystem **20**. The receiving subsystem **20** is configured and operative to detect the directed beams emitted during the predetermined synchronization period t_{SY}. At the end of the predetermined synchronization period t_{SY}, the receiving subsystem **20** is operative to initiate the timing sequence t_0. The receiving subsystem **20** is operative to detect the directed beams as described herein. However, the receiving subsystem **20** is further operative to determine the time at which the peak signal strength is detected, see reference character t peak in FIG. **11**B. The receiving subsystem **20** is further operative to correlate the peak signal strength detection time t peak with the known times at which the signal strength of the directed beam emitted by each transmitting unit $\mathbf{14}_N$ reached its peak to identify the specific transmitting unit $\mathbf{14}_N$ that transmitted the directed beam detected as having the peak signal strength (for the descriptive example presented in FIGS. **11**A, **11**B, the third transmitting unit $\mathbf{14}_3$).

For the innovative embodiment of the transmitting subsystem **12** described above in connection with FIG. **11**C, FIG. **11**D illustrates the operating characteristics of the complementary receiving subsystem **20**. The receiving subsystem **20** is configured and operative to detect the directed beams emitted during the predetermined synchronization period t_{SY}. At the end of the predetermined synchronization period t_{SY}, the receiving subsystem **20** is operative to initiate the timing sequence t_0. The receiving subsystem **20** is operative to detect the directed beams as described herein (as exemplarily illustrated by the detected signal pulses DP_1, DP_2, DP_3, DP_4 in FIG. **5**D). However, the receiving subsystem **20** is further operative to determine the two highest peak signal strengths of the detected directed beams, see reference characters DP_3 and DP_2 in FIG. **11**D, which depict the highest and next highest detected signal pulses, and the times at which the two highest strength signals were detected (t_{21} and t_{31} in FIG. **11**D).

The signal strength detection times allows the particular transmitting units $\mathbf{14}_N$ on the robotic device **100** to be identified, i.e., transmitting units $\mathbf{14}_3$ and $\mathbf{14}_2$ in the example of FIG. **11**D. The receiving subsystem **20** is then further operative to compute the amplitude ratio of these signal pulses, e.g., DP_3/DP_2, and to use such computed amplitude ratio as a pointer to a look-up table that identifies the angular orientation of the identified transmitting units $\mathbf{14}_3$, $\mathbf{14}_2$, which in turn establishes the travel vector for the robotic device **100**.

Even though the transmitting units $\mathbf{14}_N$ mounted in combination with the robotic device **100** are interchangeable, the specific location of each individual transmitting unit $\mathbf{14}_N$ on the robotic device **100** is a known quantity. Based upon the identification of the transmitting unit $\mathbf{14}_N$ that emitted the directed beam detected by the receiving subsystem **20**, the receiving subsystem **20** can execute rather straightforward geometric calculations, based upon the location of the identified transmitting unit $\mathbf{14}_N$, to determine the travel vector of the robotic device **100**.

When the receiving subsystem **20** functions as the base station, a means is required to communicate the control signal to the robotic device. Accordingly, embodiments of the receiving subsystem **20** that operate as a base station further include a transmitting unit **32** (see FIG. **9**). Once the navigation control algorithm implemented by the microprocessor **24** has determined the prescribed conduct to be implemented by the robotic device **10**, the microprocessor **24** is operative to select the appropriate control signal to implement such prescribed conduct from the memory module **28**. The microprocessor **24** is then operative to activate the transmitting unit **32** to communicate (by transmitting) the control signal to the receiver unit **16** of the robotic device **100** where the prescribed conduct defined by the control signal is implemented by means of the microprocessing unit **135**.

While the robotic device **100** is described (and depicted in FIG. **9**) as being configured to include a dedicated receiver unit **16** for receiving control signals transmitted by the transmitting unit **32** of the receiving unit **20**, it is preferable that the omnidirectional detector **128** (of the virtual wall detection system) be adapted to detect and process such control signals. For those embodiments of the navigational control system **10** according to the present invention wherein the receiving unit **20** is integrated in combination with the robotic device **10**, the transmitting unit **32** is not required. Rather, the receiving unit **20** of the navigation control system **100** is electrically coupled to the microprocessing unit **135** (via an I/O port) of the robotic device **100** so that the receiving unit **20** can communicate control signals directly to the microprocessing unit **135**.

As disclosed above, in preferred embodiments of the navigational control system **10** according to the present invention, the receiving subsystem **20** functions as the base station, i.e., the wall unit configuration, and the transmitting subsystem **12** is integrated in combination with the robotic device **100**. One preferred embodiment that is illustrative of the features and functionality of the navigational control system **10** according to the present invention is exemplarily illustrated in FIGS. **12**A-**12**C.

FIG. **12**A depicts a robotic device **100** operating in a defined working area WA bounded by walls W. A virtual wall unit VWU is positioned in the only entryway to the working area WA and operative to emit a confinement beam CB that confines the robotic device **100** to operations within the working area WA.

The transmitting subsystem **12** of the illustrated embodiment of the navigational control system **10** is integrated in combination with the robotic device **100** and comprises a set of transmitting units $\mathbf{14}_N$ (eight (8) for the described embodiment such that N equals the integers 1-8) that are operative to generate a corresponding set of directed beams DB_N (where N equals the integers 1-8) as illustrated in FIG. **11**B (only two directed beams DB_3, DB_4 are illustrated in FIG. **11**B). Reference characters BA_1-BA_8 identify the propagation axes of the directed beams DB_N emitted by the transmitting units $\mathbf{14}_1$-$\mathbf{14}_8$, respectively. Each transmitting unit $\mathbf{14}_N$ is configured and operative to emit a directed beam DB_N having a predetermined emission pattern θ_N centered about the corresponding beam axis BA_N. For the illustrated embodiment, the emission pattern θ_N of each directed beam DB_N is approximately 100°.

Preferably, the predetermined emission pattern θ_N of the directed beams DB_N is correlated with the number of transmitting units $\mathbf{14}_N$ so that the transmitting subsystem **12** of the navigational control system **10** emulates an omnidirectional transmitting source. An omnidirectional transmitting source is necessary to ensure that one or more of the directed beams DB_N are detected by the receiving subsystem **20** since the position and orientation of the robotic device **100** in the defined working area (e.g., in terms of its forward motion FM), with respect to the receiving station **20**, is an unknown variable at any particular moment in time. Preferably the emission patterns θ_N of the directed beams DB_N overlap.

As an examination of FIG. **12**A, **12** (and in particular FIG. **12**B) shows, the directed beams DB_3, DB_4 emitted by transmitting units $\mathbf{14}_3$, $\mathbf{14}_4$, respectively, will be detected by

the detection units 30_1, 30_2, 30_3 of the receiving subsystem **20**. The detection units 30_1, 30_2, 30_3 are operative to detect a parameter representative of the relative signal strengths of the detected beams DB_3, DB_4, e.g., V_1, V_2, V_3, respectively (as disclosed above each detection unit 30_N is operative to average the signal strengths when two directed beams are detected simultaneously).

The receiving subsystem **20** is operative to implement the signal processing algorithm to compute the absolute bearing and distance between the receiving subsystem **20** and the robotic device **100**. The receiving subsystem **20** then implements the navigation control algorithm to correlate the computed bearing and distance with one of the cells comprising the grid map of the defined working area WA stored in the memory module **28**, and adds such cell to the position history of the robotic device **100** to update the position history. The receiving subsystem **20** is then operative under the navigation control algorithm to determine if there is a predetermined triggering event associated with this updated position history. If so, the receiving subsystem **20** is operative to select the appropriate control signal, as determined by the navigation control algorithm, and transmit such control signal to the receiver unit **16** of the robotic device **100** using the transmitting system **32** (see FIG. **9**). The microprocessing unit **135** of the robotic device **100**, is operative in response to the reception of the control signal by means of the omnidirectional detector **128**, to implement prescribed conduct, e.g., one or more of the basic maneuvers and/or behavioral modes exemplarily described herein, specified by the control signal.

An exemplary embodiment of a navigational control system **10'** according to the present invention wherein the transmitting subsystem **12** functions as a base station and the receiving subsystem **20** is integrated in combination with the robotic device **100** is illustrated in FIG. **13**. The transmitting subsystem **12** comprises a distributed set of transmitting units 14_N positioned to abut the walls W of the defined working area. As illustrated in FIG. **13**, the transmitting subsystem **12** comprises a first transmitting unit 14_1, a second transmitting unit 14_2, and a third transmitting unit 14_3 positioned in abutting engagement with adjacent walls W, respectively.

Each transmitting unit 14_N comprising this distributed set is configured and operative to emit a directed beam having a predetermined emission pattern θ_N along a predetermined beam axis DB_N (DB_1, DB_2, and DB_3 in FIG. **13** define the predetermined beam axes for the distributed transmitting units 14_1, 14_2, 14_3, respectively) at a unique operating frequency, preferably in the infrared frequency range and preferably modulated as disclosed herein. Preferably, each transmitting unit 14_1, 14_2, 14_3 is configured and operative to generate a predetermined beam emission pattern θ N that effectively covers the defined working area WA, i.e., θ_N is approximately 180° for the distributed transmission subsystem **12** depicted in FIG. **13**.

The receiving subsystem **20** for the navigational control system **10'** preferably comprises a single omnidirectional detection unit **30** which may be of the type described in commonly-owned, U.S. patent application Ser. No. 10/056,804, filed 24 Jan. 2002, entitled METHOD AND SYSTEM FOR ROBOT LOCALIZATION AND CONFINEMENT (the virtual wall system summarily described herein). The omnidirectional detection unit **30** is configured and operative to scan through the unique operating frequencies utilized by the distributed transmitting units 14_1, 14_2, 14_3.

The omnidirectional detection unit **30** is operative to detect the directed beams DB_1, DB_2, DB_3 emitted by the distributed transmitting units 14_1, 14_2, 14_3. The receiving subsystem is configured and operative to process the signals of the detected directed beam to determine the absolute position of the robotic device **100** within the defined working area WA. This absolute position is defined in terms of a cell of the grid map of the defined working area WA. A sequence of absolute positions, determined as described above, identifies a sequence of cells that defines the position history of the robotic device **100**.

The receiver subsystem **20** is operative as described above to utilize a navigation control algorithm to determine whether a triggering event has occurred in the position history, and if a trigger event has occurred, the receiver subsystem **20** is operative to communicate the control signal associated with the triggering event/navigation control algorithm to the robotic device **100**. The robotic device **100** is operative, in response to the communicated control signal, to implement the prescribed conduct specified by the control signal.

A variety of modifications and variations of the present invention are possible in light of the above teachings. The navigational control system **10** according to the present invention has been described above as determining and using the instantaneous position (or a sequence of instantaneous positions) of a robotic device as a control parameter for directly altering the movement activity of the robotic device. One skilled in the art will appreciate that the navigational control system according to the present invention can be used for other purposes. For example, the navigational control system of the present invention can be used for correcting errors in movement activity of robotic devices relying upon dead reckoning. It is therefore to be understood that, within the scope of the appended claims, the present invention may be practiced other than as specifically described herein.

What is claimed is:

1. An autonomous cleaning apparatus comprising:

a chassis;

a drive system disposed on the chassis and operable to enable movement of the cleaning apparatus;

a controller in communication with the drive system, the controller including a processor operable to control the drive system to steer movement of the cleaning apparatus;

a cleaning head system disposed on the chassis having a cleaning pathway providing pneumatic communication with a debris bin, the cleaning head system comprising an agitating brush configured to throw debris into the debris bin;

an indicator light; and

a debris sensor in communication with the controller, the debris sensor responsive to the debris to generate a signal indicative of passing of the debris;

wherein the controller is configured to

change an operational condition of the cleaning apparatus in response to receiving the signal generated by the debris sensor, the operational condition selected from the group consisting of a speed of the movement of the cleaning apparatus and an amount of power drawn by the cleaning apparatus, and to

illuminate the indicator light in response to the signal generated by the debris sensor.

2. The autonomous cleaning apparatus of claim **1**, wherein the controller is configured to change the operational condition by changing a speed of the movement of the cleaning apparatus in response to the signal generated by the debris sensor.

3. The autonomous cleaning apparatus of claim 1, wherein the controller is configured to change the operational condition by changing an amount of power drawn by the cleaning apparatus in response to the signal generated by the debris sensor.

4. The autonomous cleaning apparatus of claim 1, wherein in addition to the controller being configured to change the operational condition, the processor is configured to implement a spot cleaning mode in an area in which the cleaning apparatus was operating, substantially immediately in response to receiving the signal generated by the debris sensor.

5. The autonomous cleaning apparatus of claim 4, wherein the processor is configured to, in the spot cleaning mode, maneuver the autonomous cleaning apparatus according to a self-bounded area algorithm.

6. The autonomous cleaning apparatus of claim 5, wherein the self-bounded area algorithm comprises a spiraling algorithm at a reduced drive speed.

7. The autonomous cleaning apparatus of claim 1, wherein the processor is configured to implement a high power cleaning mode in response to the debris signal, the high power mode comprising elevating power delivery to the cleaning head system.

8. The autonomous cleaning apparatus of claim 1, wherein the processor is configured to execute a prioritized arbitration scheme to identify and implement one or more dominant behavioral modes based upon the signal.

9. The autonomous cleaning apparatus of claim 1, wherein the processor is configured to control one or more operational conditions of the autonomous cleaning apparatus based upon the signal.

10. The autonomous cleaning apparatus of claim 1, wherein the debris sensor is disposed along a wall of the cleaning pathway in a location to receive debris thrown by the agitating brush of the cleaning head system for generating the signal.

11. The autonomous cleaning apparatus of claim 1, wherein the debris sensor comprises right and left debris sensors in communication with the controller and disposed along a wall of the cleaning pathway in a location to receive debris thrown by the agitating brush of the cleaning head system for generating respective debris signals; and

wherein the processor is configured to direct the drive system to turn the cleaning apparatus to the right in response to the debris signal generated by the right debris sensor and to turn the cleaning apparatus to the left in response to the debris signal generated by the left debris sensor.

12. The autonomous cleaning apparatus of claim 11, wherein the right and left debris sensors are disposed opposite each other and equidistantly from a center axis defined by the cleaning pathway.

13. The autonomous cleaning apparatus of claim 1, wherein the controller is configured to determine a debris gradient using the signal, the debris gradient being representative of changes in debris strikes counted as the cleaning apparatus moves over a surface.

14. The autonomous cleaning apparatus of claim 13, wherein the controller is configured to examine the debris gradient and continuously adjust a path or a pattern of movement of the cleaning apparatus to clean the surface.

15. The autonomous cleaning apparatus of claim 1, wherein the controller is configured to illuminate the indicator light in response to the signal generated by the debris sensor and, at the same time, to increase an amount of power drawn by the cleaning apparatus for cleaning.

16. The autonomous cleaning apparatus of claim 1, wherein the controller is configured to select a behavioral mode in response to the signal generated by the debris sensor.

17. The autonomous cleaning apparatus of claim 1, wherein the controller is configured to steer the cleaning apparatus in a forward direction, turning to cover a location of the debris, in response to the debris signal generated by the debris sensor.

18. The autonomous cleaning apparatus of claim 1, wherein the controller is configured to control the drive system to execute a pattern of movements to steer the cleaning apparatus toward a debris area corresponding to the signal generated by the debris sensor.

19. An autonomous cleaning apparatus comprising:

a chassis;

a drive system disposed on the chassis and operable to enable movement of the cleaning apparatus;

a controller in communication with the drive system, the controller including a processor operable to control the drive system to steer movement of the cleaning apparatus;

a cleaning head system disposed on the chassis having a cleaning pathway providing pneumatic communication with a debris bin, the cleaning head system comprising an agitating brush configured to throw debris into the debris bin;

an indicator light; and

a debris sensor in communication with the controller, the debris sensor responsive to the debris to generate a signal indicative of passing of the debris;

wherein the controller is configured to

change an amount of power drawn by the cleaning apparatus in response to receiving the signal generated by the debris sensor to implement a high power cleaning mode in response to the signal, and to

illuminate the indicator light in response to the high power cleaning mode.

20. The autonomous cleaning apparatus of claim 19, wherein the controller is configured to illuminate the indicator light in response to changing the operational condition.

21. The autonomous cleaning apparatus of claim 19, wherein the controller is configured to illuminate the indicator light in response to the signal.

* * * * *