US009962482B2

(12) **United States Patent**
Patel et al.

(10) **Patent No.: US 9,962,482 B2**
(45) **Date of Patent: May 8, 2018**

(54) **REMOVABLE CONTROLLER FOR AN INFUSION PUMP**

(71) Applicant: **Bigfoot Biomedical, Inc.**, Milpitas, CA (US)

(72) Inventors: **Rajan Patel**, Menlo Park, CA (US); **Todd Kirschen**, Palo Alto, CA (US); **Steven Friedman**, San Francisco, CA (US); **Victor Briones**, Gilroy, CA (US); **Joshua Colton**, Palo Alto, CA (US); **Mellanie Balmeo**, Redwood City, CA (US)

(73) Assignee: **Bigfoot Biomedical, Inc.**, Milpitas, CA (US)

(*) Notice: Subject to any disclaimer, the term of this patent is extended or adjusted under 35 U.S.C. 154(b) by 85 days.

(21) Appl. No.: **15/234,410**

(22) Filed: **Aug. 11, 2016**

(65) **Prior Publication Data**

US 2016/0346460 A1 Dec. 1, 2016

Related U.S. Application Data

(60) Continuation of application No. 14/135,960, filed on Dec. 20, 2013, now Pat. No. 9,440,021, which is a (Continued)

(51) **Int. Cl.**
A61M 5/14 (2006.01)
A61M 5/168 (2006.01)
(Continued)

(52) **U.S. Cl.**
CPC ..... ***A61M 5/1413*** (2013.01); ***A61M 5/16831*** (2013.01); *A61M 5/14244* (2013.01); (Continued)

(58) **Field of Classification Search**
CPC ..... A61M 5/1413; A61M 2005/14268; A61M 5/14244; A61M 5/16831; A61M 5/16854; (Continued)

(56) **References Cited**

U.S. PATENT DOCUMENTS

2,605,765 A 8/1952 Kollsman
3,563,090 A 2/1971 Deltour
(Continued)

FOREIGN PATENT DOCUMENTS

CA 2543545 5/2005
DE 196 27 619 1/1998
(Continued)

OTHER PUBLICATIONS

Accu-Chek Spirit, "Pump Therapy Made for You," Roche, 2006, 6 pages.
(Continued)

Primary Examiner — Shefali Patel
(74) *Attorney, Agent, or Firm* — Fish & Richardson P.C.

(57) **ABSTRACT**

Some embodiments of an infusion pump system include a controller device that is configured to removably attach to a pump device in a manner that provides a secure fitting, an overall compact size, and a reliable electrical connection. In particular embodiments, the controller device can be secured to the pump device in a generally side-by-side arrangement. The compact size can enhance discreteness and portability of the infusion pump system.

13 Claims, 23 Drawing Sheets

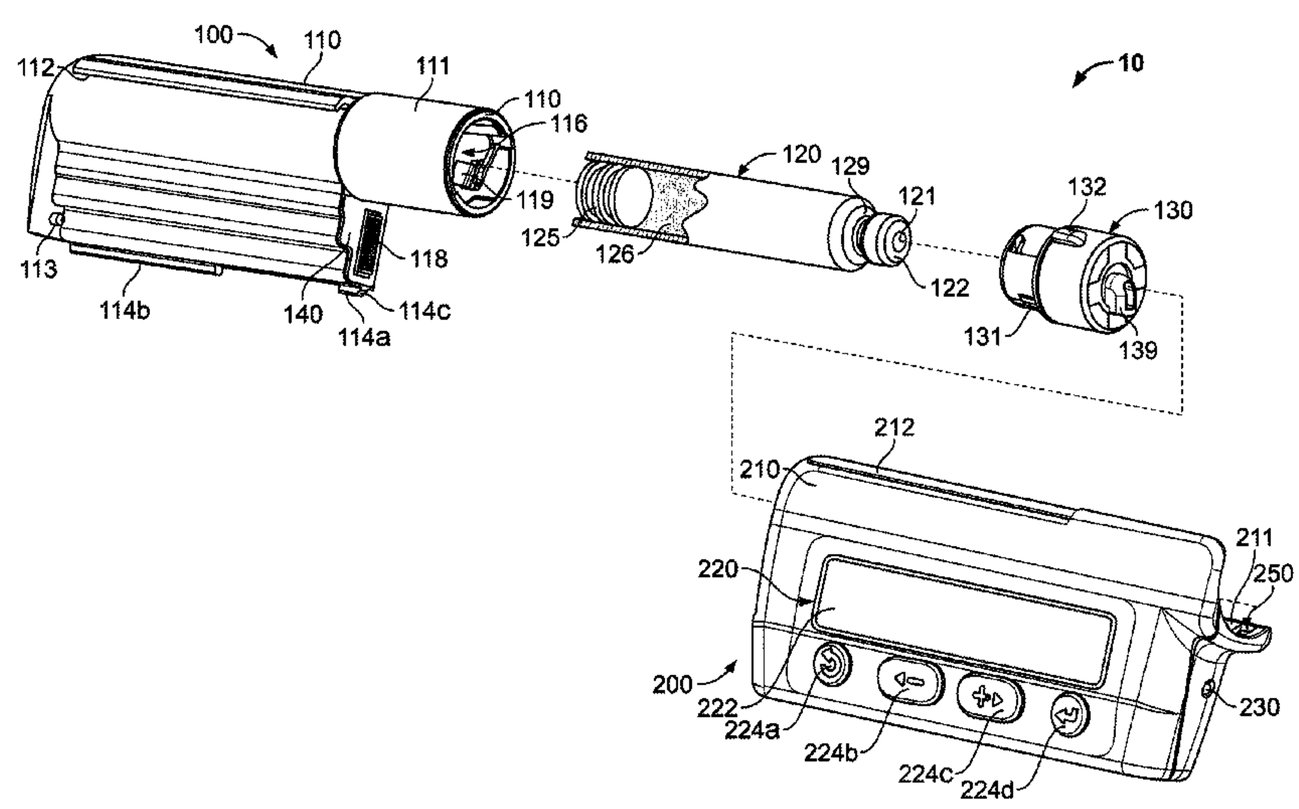

Related U.S. Application Data

continuation of application No. 13/160,191, filed on Jun. 14, 2011, now Pat. No. 8,641,673, which is a division of application No. 11/751,262, filed on May 21, 2007, now Pat. No. 7,981,102.

(51) **Int. Cl.**
A61M 5/142 (2006.01)
A61M 5/315 (2006.01)

(52) **U.S. Cl.**
CPC *A61M 2005/14268* (2013.01); *A61M 2005/16863* (2013.01); *A61M 2005/31518* (2013.01); *A61M 2205/3306* (2013.01); *A61M 2205/50* (2013.01); *A61M 2205/502* (2013.01); *Y10S 128/01* (2013.01); *Y10S 128/12* (2013.01)

(58) **Field of Classification Search**
CPC A61M 2005/16863; A61M 2005/16868; A61M 2005/16872; A61M 2005/172; A61M 2205/3306; A61M 2205/3331
See application file for complete search history.

(56) **References Cited**

U.S. PATENT DOCUMENTS

3,886,938 A 6/1975 Szabo et al.
4,077,405 A 3/1978 Haerten et al.
4,231,368 A 11/1980 Becker
4,265,241 A 5/1981 Portner et al.
4,300,554 A 11/1981 Hessberg et al.
4,313,439 A 2/1982 Babb et al.
4,387,734 A 6/1983 Borsanyi
4,398,908 A 8/1983 Siposs
4,435,173 A 3/1984 Siposs et al.
4,443,218 A 4/1984 DeCant, Jr. et al.
4,493,704 A 1/1985 Beard et al.
4,529,401 A 7/1985 Leslie et al.
4,681,569 A 7/1987 Coble et al.
4,838,857 A 6/1989 Strowe et al.
4,850,817 A 7/1989 Nason et al.
5,045,064 A 9/1991 Idriss
5,088,981 A 2/1992 Howson et al.
5,088,990 A 2/1992 Hivale et al.
5,190,522 A 3/1993 Wojcicki et al.
5,225,763 A 7/1993 Krohn et al.
5,250,027 A 10/1993 Lewis et al.
5,261,882 A 11/1993 Sealfon et al.
5,314,412 A 5/1994 Rex
5,335,994 A 8/1994 Weynant Nee Girones
5,338,157 A 8/1994 Blomquist
5,342,180 A 8/1994 Daoud
5,389,078 A 2/1995 Zalesky et al.
5,395,340 A 3/1995 Lee
5,411,487 A 5/1995 Castagna
5,415,641 A 5/1995 Yerlikaya et al.
5,545,143 A 8/1996 Fischell et al.
5,551,850 A 9/1996 Williamson et al.
5,569,186 A 10/1996 Lord et al.
5,626,566 A 5/1997 Petersen et al.
5,637,095 A 6/1997 Nason et al.
5,665,065 A 9/1997 Colman et al.
5,718,562 A 2/1998 Lawless
5,741,216 A 4/1998 Hemmingsen et al.
5,766,155 A 6/1998 Hyman et al.
5,772,635 A 6/1998 Dastur et al.
5,816,306 A 10/1998 Giacomel
5,852,803 A 12/1998 Ashby, III et al.
5,858,001 A 1/1999 Tsals et al.
5,919,167 A 7/1999 Mulhauser
5,925,018 A 7/1999 Ungerstedt
5,928,201 A 7/1999 Poulsen et al.
5,947,934 A 9/1999 Hansen et al.
5,951,530 A 9/1999 Steengaard et al.
5,957,889 A 9/1999 Poulsen et al.
5,984,894 A 11/1999 Poulsen et al.
5,984,897 A 11/1999 Petersen et al.
5,997,475 A 12/1999 Bortz
6,003,736 A 12/1999 Ljunggren
6,010,485 A 1/2000 Buch-Rasmussen et al.
6,033,377 A 3/2000 Rasmussen et al.
6,045,537 A 4/2000 Klitmose
6,074,372 A 6/2000 Hansen
6,083,206 A 7/2000 Molko
6,110,149 A 8/2000 Klitgaard et al.
6,156,014 A 12/2000 Petersen et al.
6,171,276 B1 1/2001 Lippe et al.
6,231,540 B1 5/2001 Smedegaard
6,248,067 B1 6/2001 Causey, III et al.
6,248,090 B1 6/2001 Jensen et al.
6,248,093 B1 6/2001 Moberg
6,277,098 B1 8/2001 Klitmose et al.
6,302,855 B1 10/2001 Lav et al.
6,302,869 B1 10/2001 Klitgaard
6,368,314 B1 4/2002 Kipfer et al.
6,375,638 B2 4/2002 Nason et al.
6,379,339 B1 4/2002 Klitgaard et al.
6,381,496 B1 4/2002 Meadows et al.
6,404,098 B1 6/2002 Kayama et al.
6,427,088 B1 7/2002 Bowman, IV et al.
6,436,072 B1 8/2002 Kullas et al.
6,461,331 B1 10/2002 Van Antwerp
6,474,219 B2 11/2002 Klitmose et al.
6,485,461 B1 11/2002 Mason et al.
6,508,788 B2 1/2003 Preuthun
6,524,280 B2 2/2003 Hansen et al.
6,533,183 B2 3/2003 Aasmul et al.
6,537,251 B2 3/2003 Klitmose
6,540,672 B1 4/2003 Simonsen et al.
6,544,229 B1 4/2003 Danby et al.
6,547,764 B2 4/2003 Larsen et al.
6,551,276 B1 4/2003 Mann et al.
6,554,798 B1 4/2003 Mann et al.
6,554,800 B1 4/2003 Nezhadian et al.
6,558,320 B1 5/2003 Causey, III et al.
6,558,351 B1 5/2003 Steil et al.
6,562,001 B2 5/2003 Lebel et al.
6,562,011 B1 5/2003 Buch-Rasmussen et al.
6,564,105 B2 5/2003 Starkweather et al.
6,569,126 B1 5/2003 Poulsen et al.
6,571,128 B2 5/2003 Lebel et al.
6,577,899 B2 6/2003 Lebel et al.
6,582,404 B1 6/2003 Klitgaard et al.
6,585,644 B2 7/2003 Lebel et al.
6,585,699 B2 7/2003 Ljunggreen et al.
6,589,229 B1 7/2003 Connelly et al.
6,605,067 B1 8/2003 Larsen
6,613,019 B2 9/2003 Munk
6,641,533 B2 11/2003 Causey, III et al.
6,648,821 B2 11/2003 Lebel et al.
6,650,951 B1 11/2003 Jones et al.
6,656,158 B2 12/2003 Mahoney et al.
6,656,159 B2 12/2003 Flaherty
6,659,948 B2 12/2003 Lebel et al.
6,659,978 B1 12/2003 Kasuga et al.
6,659,980 B2 12/2003 Moberg et al.
6,663,602 B2 12/2003 Møller
6,668,196 B1 12/2003 Villegas et al.
6,669,669 B2 12/2003 Flaherty et al.
6,687,546 B2 2/2004 Lebel et al.
6,691,043 B2 2/2004 Ribeiro, Jr.
6,692,457 B2 2/2004 Flaherty
6,692,472 B2 2/2004 Hansen et al.
6,694,191 B2 2/2004 Starkweather et al.
6,699,218 B2 3/2004 Flaherty et al.
6,702,779 B2 3/2004 Connelly et al.
6,715,516 B2 4/2004 Ohms et al.
6,716,198 B2 4/2004 Larsen
6,723,072 B2 4/2004 Flaherty et al.
6,733,446 B2 5/2004 Lebel et al.
6,736,796 B2 5/2004 Shekalim
6,740,059 B2 5/2004 Flaherty
6,740,072 B2 5/2004 Starkweather et al.

(56) **References Cited**

U.S. PATENT DOCUMENTS

6,740,075 B2 5/2004 Lebel et al.
6,744,350 B2 6/2004 Blomquist
6,749,587 B2 * 6/2004 Flaherty A61M 5/14248 604/151
6,752,787 B1 6/2004 Causey, III et al.
6,758,810 B2 7/2004 Lebel et al.
6,768,425 B2 7/2004 Flaherty et al.
6,780,156 B2 8/2004 Haueter et al.
6,786,246 B2 9/2004 Ohms et al.
6,786,890 B2 9/2004 Preuthun et al.
6,796,970 B1 9/2004 Klitmose et al.
6,799,149 B2 9/2004 Hartlaub
6,809,653 B1 10/2004 Mann et al.
6,810,290 B2 10/2004 Lebel et al.
6,811,533 B2 11/2004 Lebel et al.
6,811,534 B2 11/2004 Bowman, IV et al.
6,813,519 B2 11/2004 Lebel et al.
6,827,702 B2 12/2004 Lebel et al.
6,830,558 B2 12/2004 Flaherty et al.
6,852,104 B2 2/2005 Blomquist
6,854,620 B2 2/2005 Ramey
6,854,653 B2 2/2005 Eilersen
6,855,129 B2 2/2005 Jensen et al.
6,872,200 B2 3/2005 Mann et al.
6,873,268 B2 3/2005 Lebel et al.
6,878,132 B2 4/2005 Kipfer
6,893,415 B2 5/2005 Madsen et al.
6,899,695 B2 5/2005 Herrera
6,899,699 B2 5/2005 Enggaard
6,922,590 B1 7/2005 Whitehurst
6,936,006 B2 8/2005 Sabra
6,936,029 B2 8/2005 Mann et al.
6,945,961 B2 9/2005 Miller et al.
6,948,918 B2 9/2005 Hansen
6,950,708 B2 9/2005 Bowman, IV et al.
6,960,192 B1 11/2005 Flaherty et al.
6,979,326 B2 12/2005 Mann et al.
6,997,911 B2 2/2006 Klitmose
6,997,920 B2 2/2006 Mann et al.
7,005,078 B2 2/2006 Van Lintel et al.
7,008,399 B2 3/2006 Larsen et al.
7,014,625 B2 3/2006 Bengtsson
7,018,360 B2 3/2006 Flaherty et al.
7,025,743 B2 4/2006 Mann
7,029,455 B2 4/2006 Flaherty
7,052,251 B2 5/2006 Nason et al.
7,054,836 B2 5/2006 Christensen et al.
7,104,972 B2 9/2006 Møller et al.
7,128,727 B2 10/2006 Flaherty et al.
7,133,329 B2 11/2006 Skyggebjerg et al.
7,232,423 B2 6/2007 Mernoe et al.
7,327,273 B2 2/2008 Hung et al.
7,789,859 B2 9/2010 Estes et al.
2001/0041869 A1 11/2001 Causey, III et al.
2001/0056262 A1 12/2001 Cabiri et al.
2002/0004651 A1 1/2002 Ljunggreen et al.
2002/0007154 A1 1/2002 Hansen et al.
2002/0040208 A1 4/2002 Flaherty et al.
2002/0091358 A1 7/2002 Klitmose
2002/0126036 A1 9/2002 Flaherty et al.
2003/0055380 A1 3/2003 Flaherty
2003/0065308 A1 4/2003 Lebel et al.
2003/0088238 A1 5/2003 Poulsen
2003/0199825 A1 10/2003 Flaherty
2003/0216683 A1 11/2003 Shekalim
2004/0010207 A1 1/2004 Flaherty et al.
2004/0019325 A1 1/2004 Shekalim
2004/0064088 A1 4/2004 Gorman et al.
2004/0064096 A1 4/2004 Flaherty et al.
2004/0078028 A1 4/2004 Flaherty et al.
2004/0087894 A1 5/2004 Flaherty
2004/0092865 A1 5/2004 Flaherty et al.
2004/0092878 A1 5/2004 Flaherty
2004/0116866 A1 6/2004 Gorman et al.
2004/0127844 A1 7/2004 Flaherty
2004/0153032 A1 8/2004 Garribotto et al.
2004/0171983 A1 9/2004 Sparks et al.
2004/0176727 A1 9/2004 Shekalim
2004/0204673 A1 10/2004 Flaherty
2004/0220551 A1 11/2004 Flaherty et al.
2004/0235446 A1 11/2004 Flaherty et al.
2004/0260233 A1 12/2004 Garibotto et al.
2005/0021005 A1 1/2005 Flaherty et al.
2005/0022274 A1 1/2005 Campbell et al.
2005/0065760 A1 3/2005 Murtfeldt et al.
2005/0090808 A1 4/2005 Malave et al.
2005/0090851 A1 4/2005 Devlin
2005/0095063 A1 5/2005 Fathallah
2005/0160858 A1 7/2005 Mernoe
2005/0171512 A1 8/2005 Flaherty
2005/0182366 A1 8/2005 Vogt et al.
2005/0192561 A1 9/2005 Mernoe
2005/0203461 A1 9/2005 Flaherty et al.
2005/0215982 A1 9/2005 Malave et al.
2005/0222645 A1 10/2005 Malave et al.
2005/0234404 A1 * 10/2005 Vilks A61M 5/14244 604/151
2005/0238507 A1 10/2005 DiIanni et al.
2005/0245878 A1 11/2005 Mernoe et al.
2005/0251097 A1 11/2005 Mernoe
2005/0267402 A1 12/2005 Stewart et al.
2005/0273059 A1 12/2005 Mernoe et al.
2006/0041229 A1 2/2006 Garibotto et al.
2006/0069382 A1 3/2006 Pedersen
2006/0074381 A1 4/2006 Malave et al.
2006/0095014 A1 5/2006 Ethelfeld
2006/0135913 A1 6/2006 Ethelfeld
2006/0142698 A1 6/2006 Ethelfeld
2006/0151545 A1 7/2006 Imhof et al.
2006/0178633 A1 8/2006 Garibotto et al.
2006/0184119 A1 8/2006 Remde et al.
2006/0200073 A1 9/2006 Radmer et al.
2006/0206054 A1 9/2006 Shekalim
2006/0247581 A1 11/2006 Pedersen et al.
2006/0264888 A1 * 11/2006 Moberg A61M 5/1413 604/500
2007/0073228 A1 3/2007 Mernoe et al.
2007/0073236 A1 3/2007 Mernoe et al.
2007/0088271 A1 4/2007 Richards
2007/0106218 A1 5/2007 Yodfat et al.
2007/0124002 A1 5/2007 Estes et al.
2007/0141786 A1 6/2007 Kawagoe et al.
2007/0156092 A1 7/2007 Estes et al.
2007/0167905 A1 7/2007 Estes et al.
2007/0167912 A1 * 7/2007 Causey A61M 5/14244 604/131
2007/0239116 A1 10/2007 Follman et al.
2008/0051716 A1 * 2/2008 Stutz A61M 5/1413 604/151
2008/0097381 A1 4/2008 Moberg et al.
2008/0208627 A1 8/2008 Skyggebjerg

FOREIGN PATENT DOCUMENTS

DE 102 36 669 2/2004
EP 0 062 974 10/1982
EP 0 496 141 7/1992
EP 0 612 004 8/1994
EP 0 580 723 10/1995
EP 0 275 213 7/1998
EP 1 045 146 10/2000
EP 1 136 698 9/2001
EP 1 177 802 2/2002
EP 0 721 358 5/2002
EP 1 495 775 1/2005
EP 1 527 792 5/2005
EP 1 754 498 2/2007
EP 1 818 664 8/2007
FR 2 585 252 1/1987
GB 747 701 4/1956
GB 2 218 831 11/1989
WO WO 90/15928 12/1990
WO WO 97/21457 6/1997

(56) **References Cited**

FOREIGN PATENT DOCUMENTS

WO	WO 98/04301	2/1998
WO	WO 98/11927	3/1998
WO	WO 98/57683	12/1998
WO	WO 99/21596	5/1999
WO	WO 99/39118	8/1999
WO	WO 99/48546	9/1999
WO	WO 01/72360	10/2001
WO	WO 01/91822	12/2001
WO	WO 01/91833	12/2001
WO	WO 02/40083	5/2002
WO	WO 02/057627	7/2002
WO	WO 02/068015	9/2002
WO	WO 02/084336	10/2002
WO	WO 02/100469	12/2002
WO	WO 03/026726	4/2003
WO	WO 03/103763	12/2003
WO	WO 2004/056412	7/2004
WO	WO 2004/110526	12/2004
WO	WO 2005/002652	1/2005
WO	WO 2005/039673	5/2005
WO	WO 2005/072794	8/2005
WO	WO 2005/072795	8/2005
WO	WO 2006/067217	6/2006
WO	WO 2006/097453	9/2006
WO	WO 2006/105792	10/2006
WO	WO 2006/105793	10/2006
WO	WO 2006/105794	10/2006
WO	WO 2007/141786	12/2007

OTHER PUBLICATIONS

Collins and Lee, "Microfluidic flow transducer based on the measurement of electrical admittance," *Lab Chip*, 2004, 4:7-10.
Debiotech News Release, "Debiotech reveals its new miniaturized Disposable Insulin Nanopump™ for Diabetes therapy," available at http://www.debiotech.com/news/nw_159.html Apr. 24, 2006, 3 pages.
European Office Action in European Application No. 08755970.4, dated Aug. 16, 2013, 5 pages.
European Office Action in European Application No. 08780673.3, dated Sep. 23, 2015, 6 pages.
Extended European Search Report in European Application No. 08 780 673.3-1662, dated Oct. 10, 2013, 5 pages.
International Preliminary Report on Patentability in International Application No. PCT/US2008/064259, dated Nov. 24, 2009, 8 pages.
International Preliminary Report on Patentability in International Application No. PCT/US2008/064244, dated Nov. 24, 2009, 8 pages.
International Preliminary Report on Patentability in International Application No. PCT/US2008/064252, dated Nov. 24, 2009, 8 pages.
International Preliminary Report on Patentability in International Application No. PCT/US2008/064256, dated Nov. 24, 2009, 8 pages.
International Search Report & Written Opinion in International Application No. PCT/US2008/064244, dated Sep. 16, 2008, 18 pages.
International Search Report & Written Opinion in International Application No. PCT/US2008/064252, dated Aug. 28, 2008, 16 pages.
International Search Report & Written Opinion in International Application No. PCT/US2008/064256, dated Aug. 26, 2008, 15 pages.
International Search Report & Written Opinion in International Application No. PCT/US2008/064259, dated Aug. 29, 2008, 16 pages.
Medtronic News Release, "Medtronic Receives FDA Approval for World's First Insulin Pump with Real-time Continuous Glucose Monitoring," Apr. 13, 2006, 3 pages.
OmniPod Insulin Management System—Investor Relations—Press Release, Feb. 1, 2005, http://investors.insulet.com/phoenix.zhtml?c=209336&p=irol-newsArticle&ID=988708&highlight= 1 page.
OmniPod Quick Start Guide, 2007, 2 pages.
Patent Abstracts of Japan, vol. 1999, No. 04, and JP 11 010036 , Apr. 30, 1999 and Jan. 19, 1999, Toray Ind. Inc.
The Medtronic Diabetes Connection, 2006, 6 pages.
Xilas Temp Touch, "The latest in high-tech and convenient devices," DOCNews, vol. 2, No. 7, Jul. 1, 2005, http://docnews.diabetesjournals.ord/cgi/content/full/2/7/13, 3 pages.

* cited by examiner

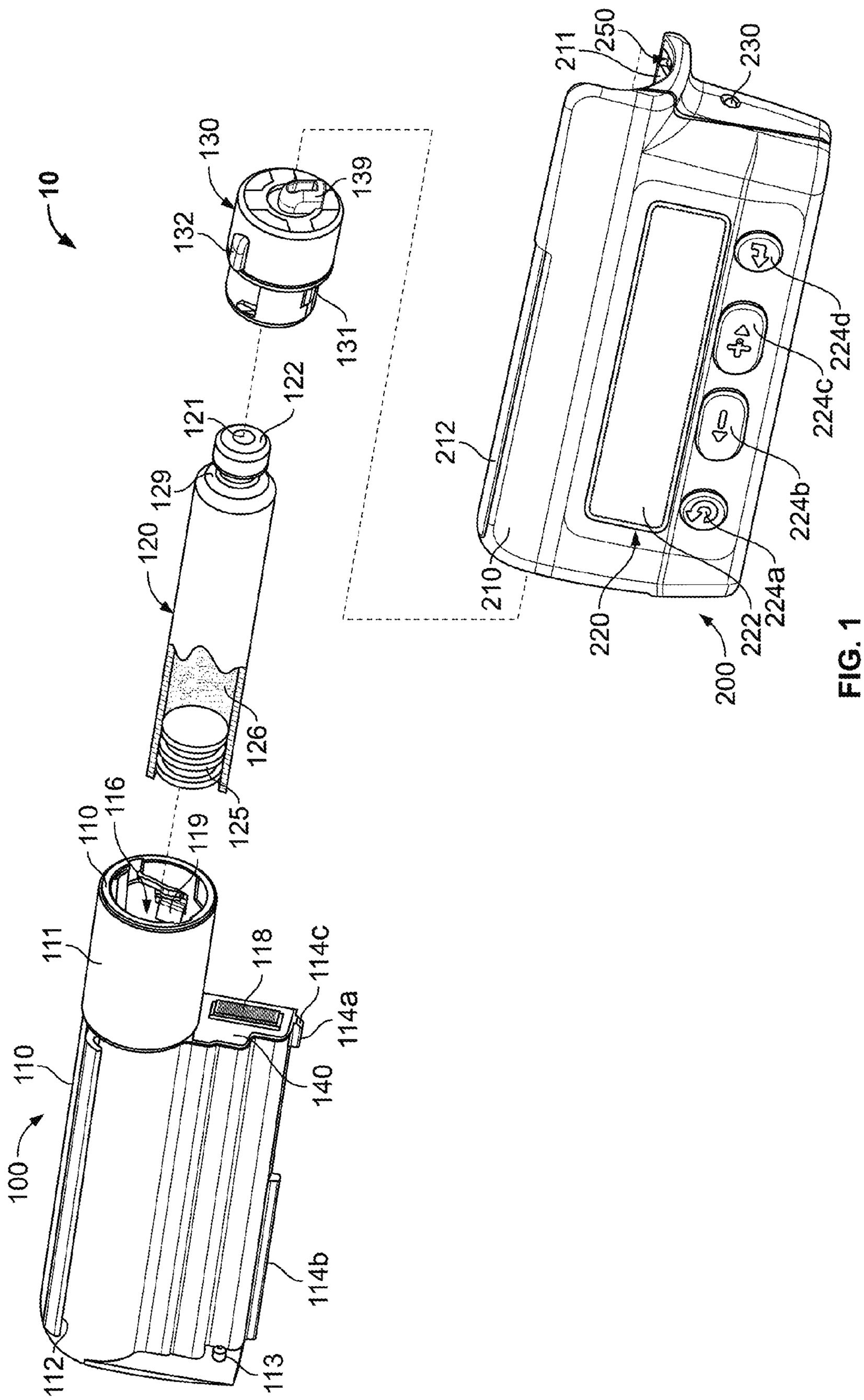
10
130
132
139
131
122
121
129
120
126
125
119
116
110
111
118
114c
114a
140
110
100
114b
112
113
211
250
230
212
224d
224c
224b
224a
210
220
222
200

FIG. 1

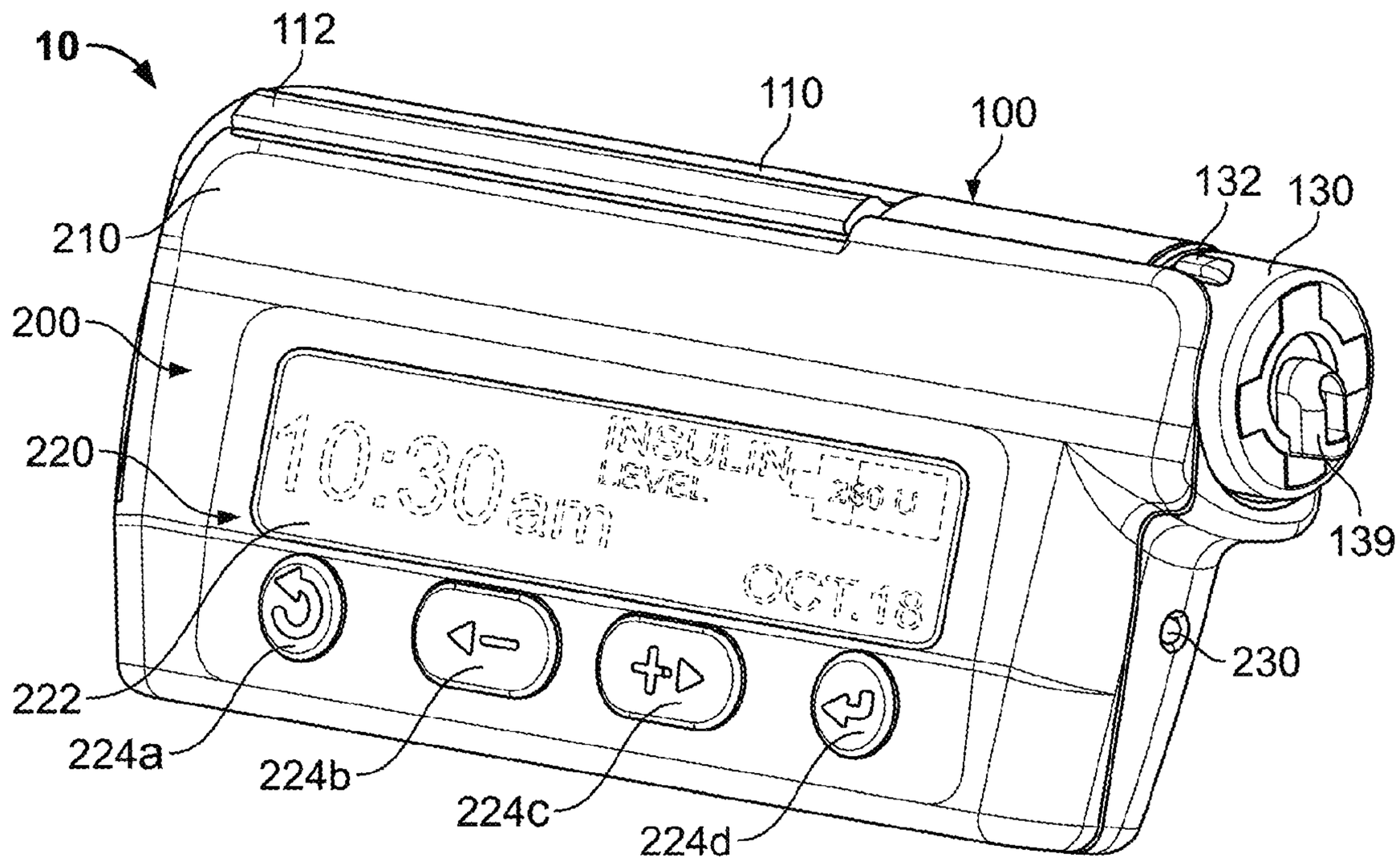
10
112
110
100
132
130
210
200
220
139
230
222
224a
224b
224c
224d
10:30am
INSULIN LEVEL
OCT. 18

FIG. 2

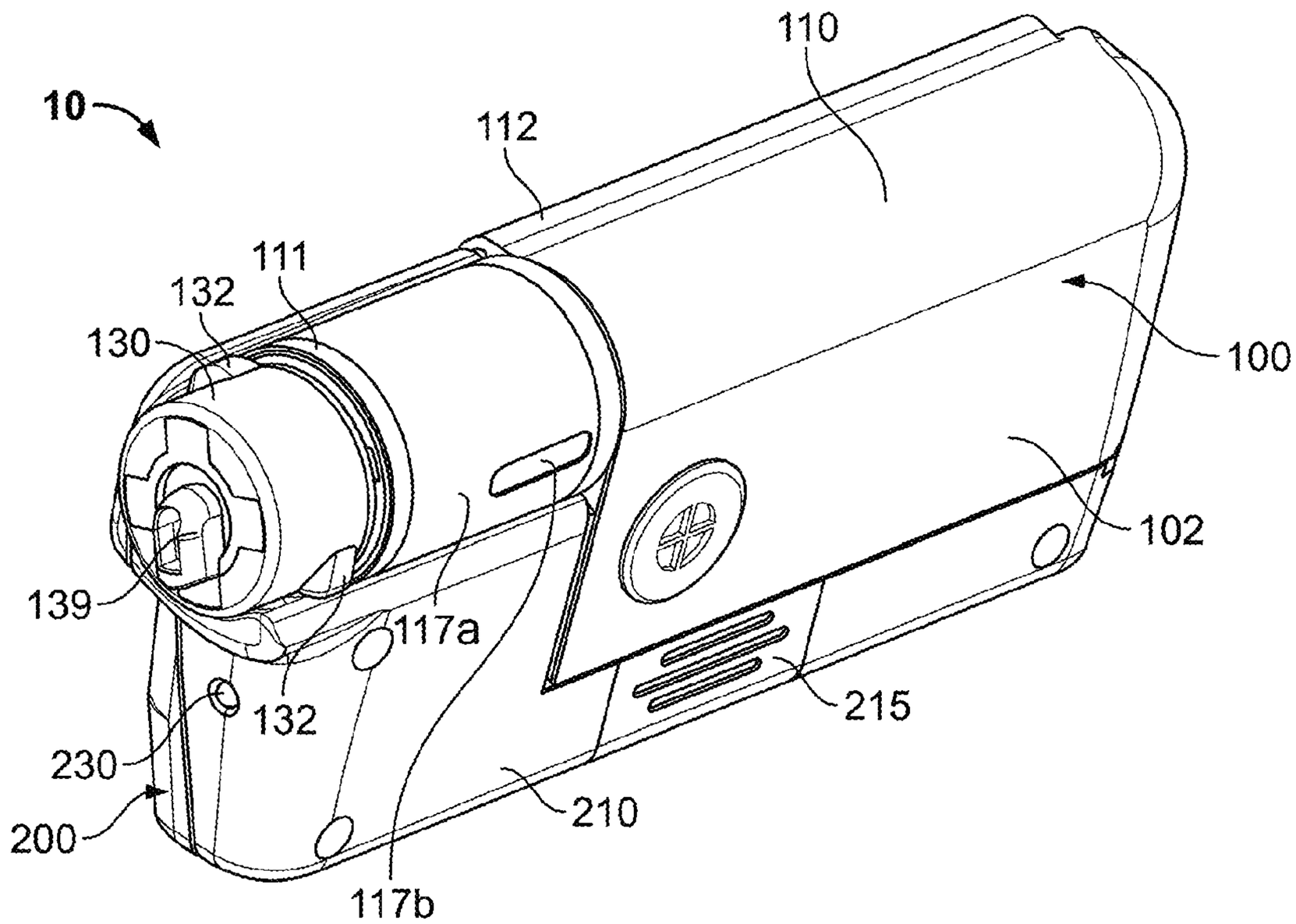
10
110
112
111
132
130
100
102
139
117a
132
215
230
210
200
117b

FIG. 3

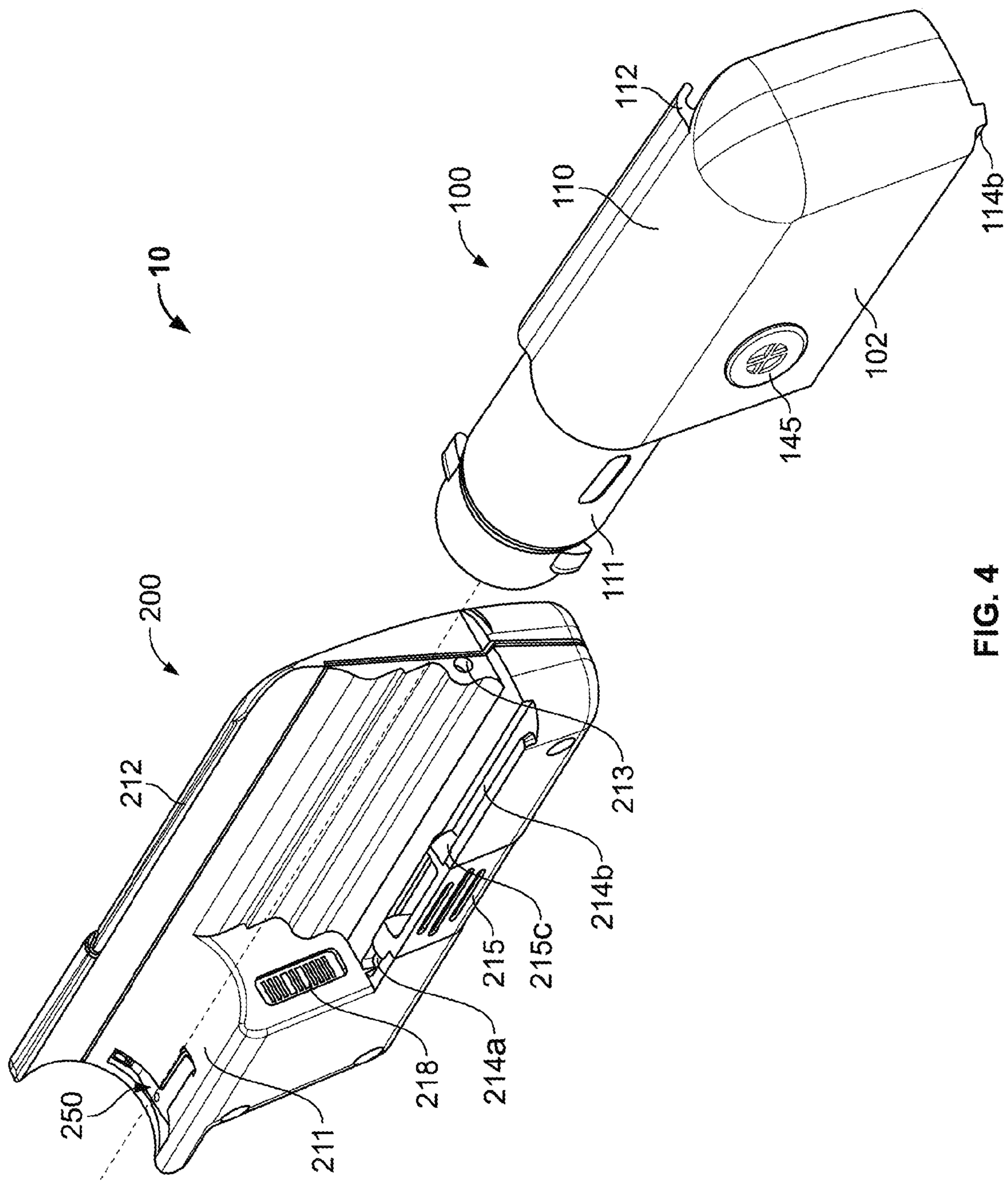
10
100
110
112
114b
102
145
111
200
212
213
214b
215c
215
214a
218
211
250

FIG. 4

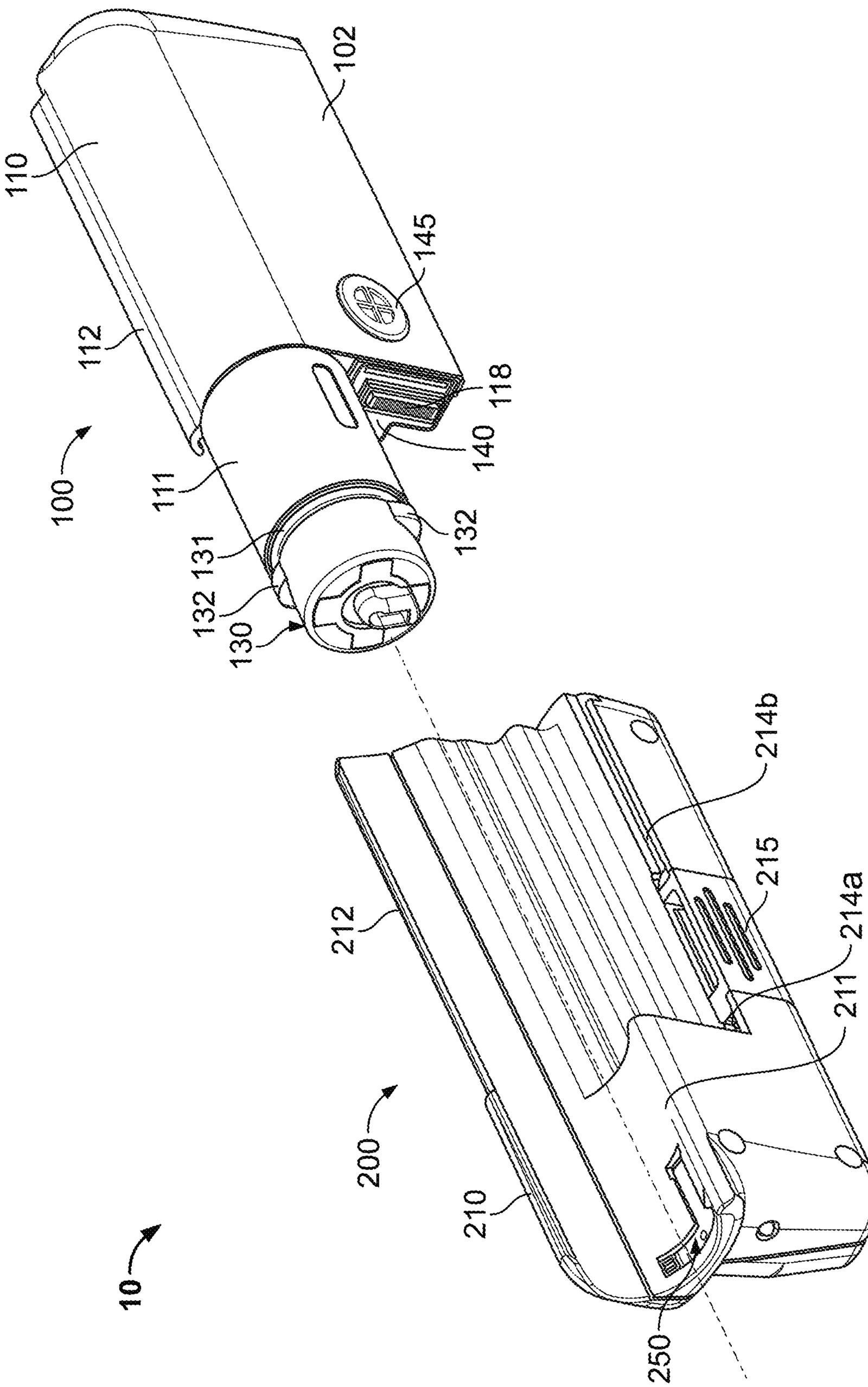
100
102
110
112
111
145
118
140
132
131
132
130
212
214b
215
214a
211
200
210
250
10

FIG. 5

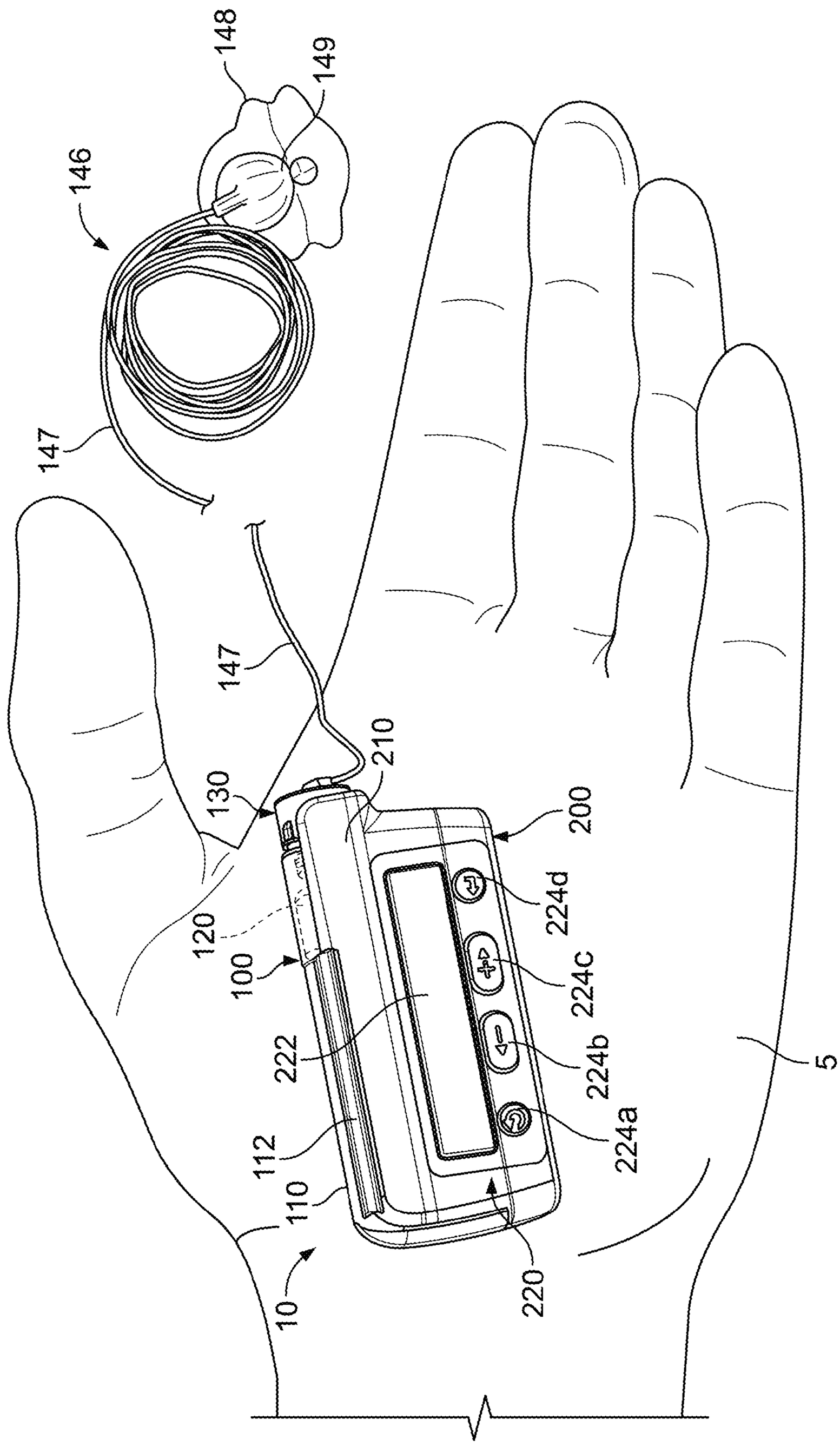
148
149
146
147
147
210
130
200
224d
120
100
224c
222
224b
5
224a
112
110
220
10

FIG. 6

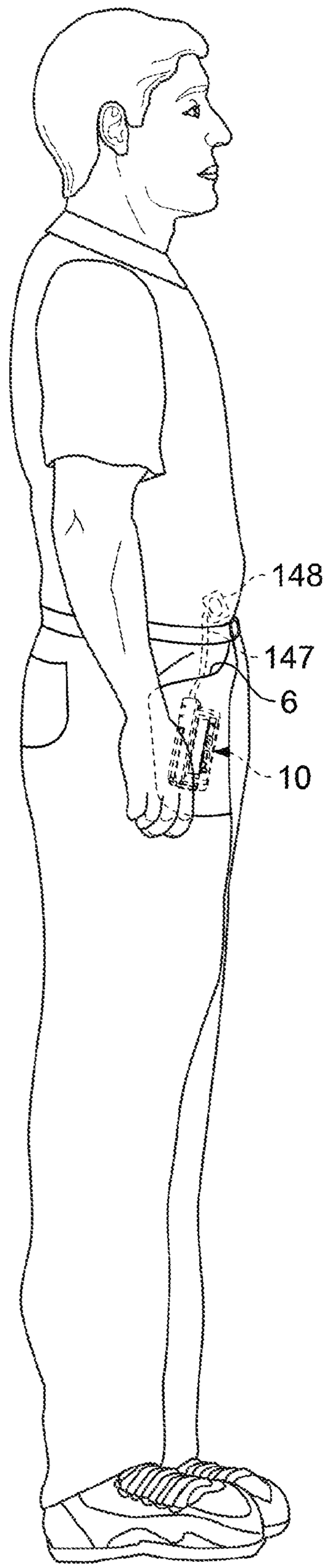

FIG. 7

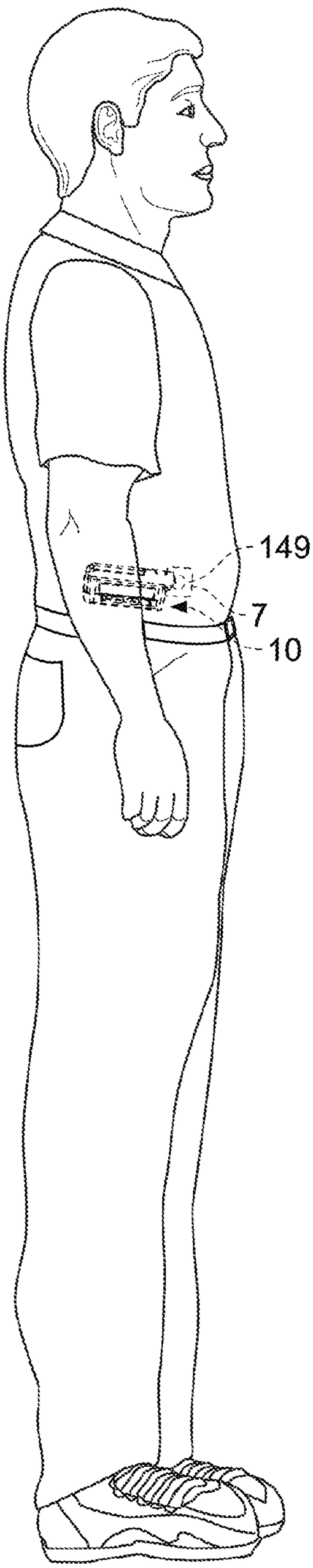

FIG. 8

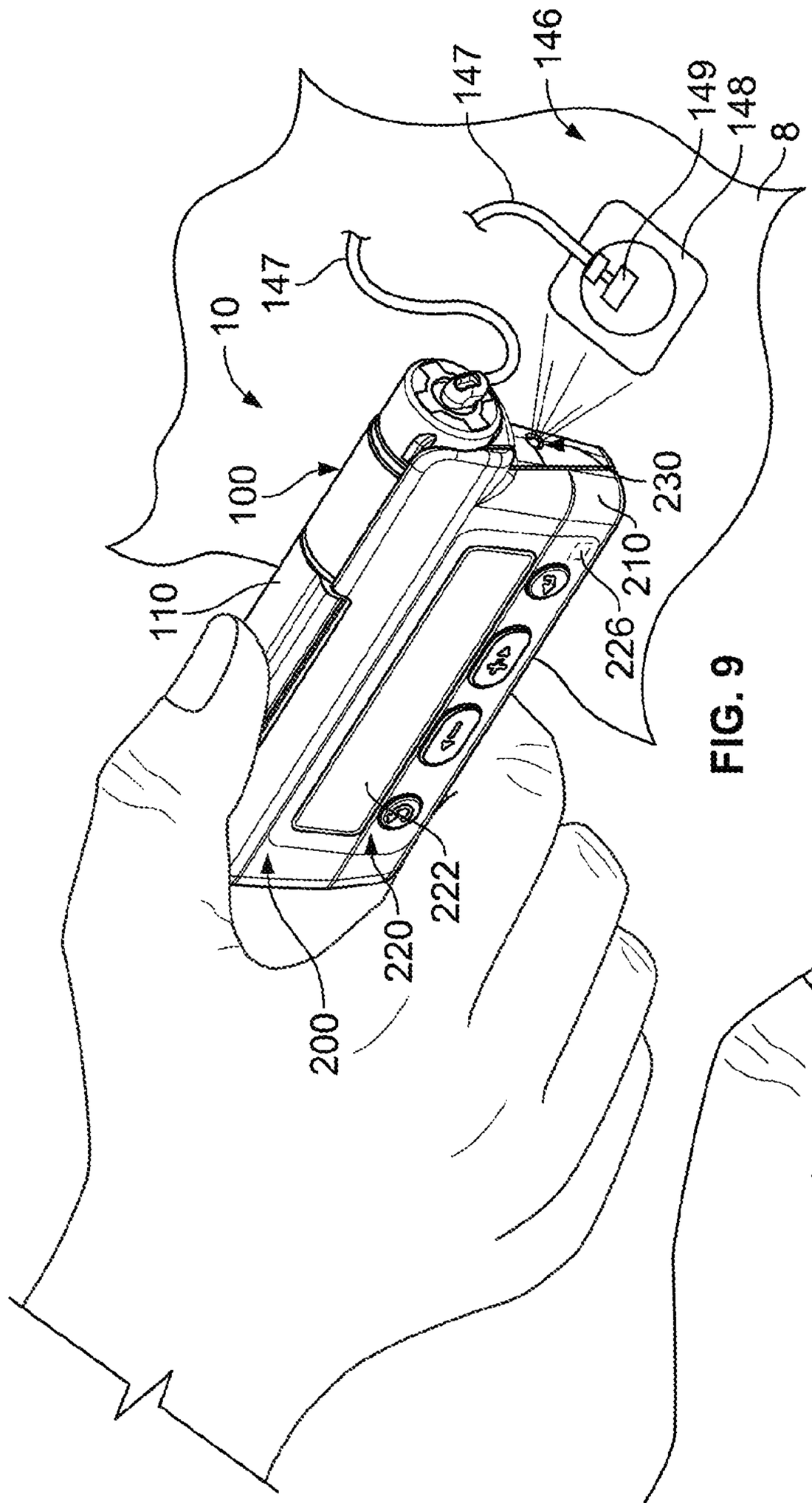
10
100
110
147
147
146
149
148
8
230
210
226
222
220
200

FIG. 9

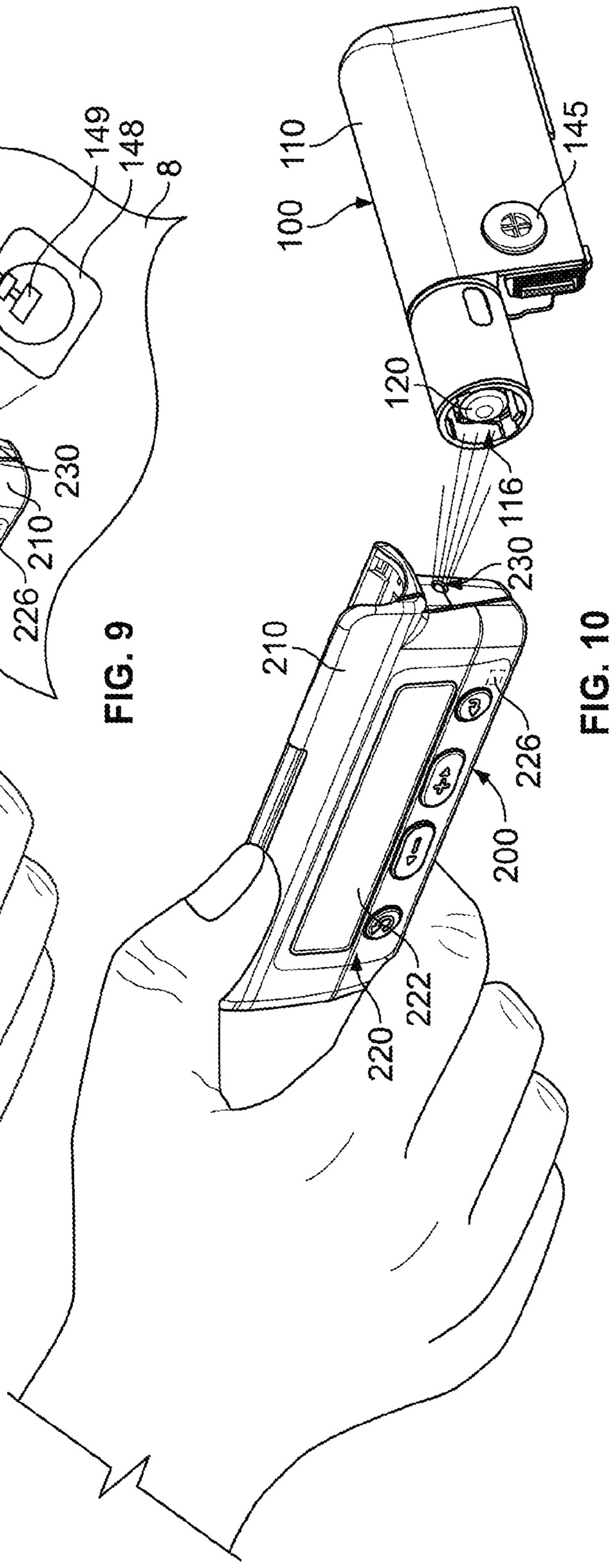
110
100
145
120
116
230
210
226
200
222
220

FIG. 10

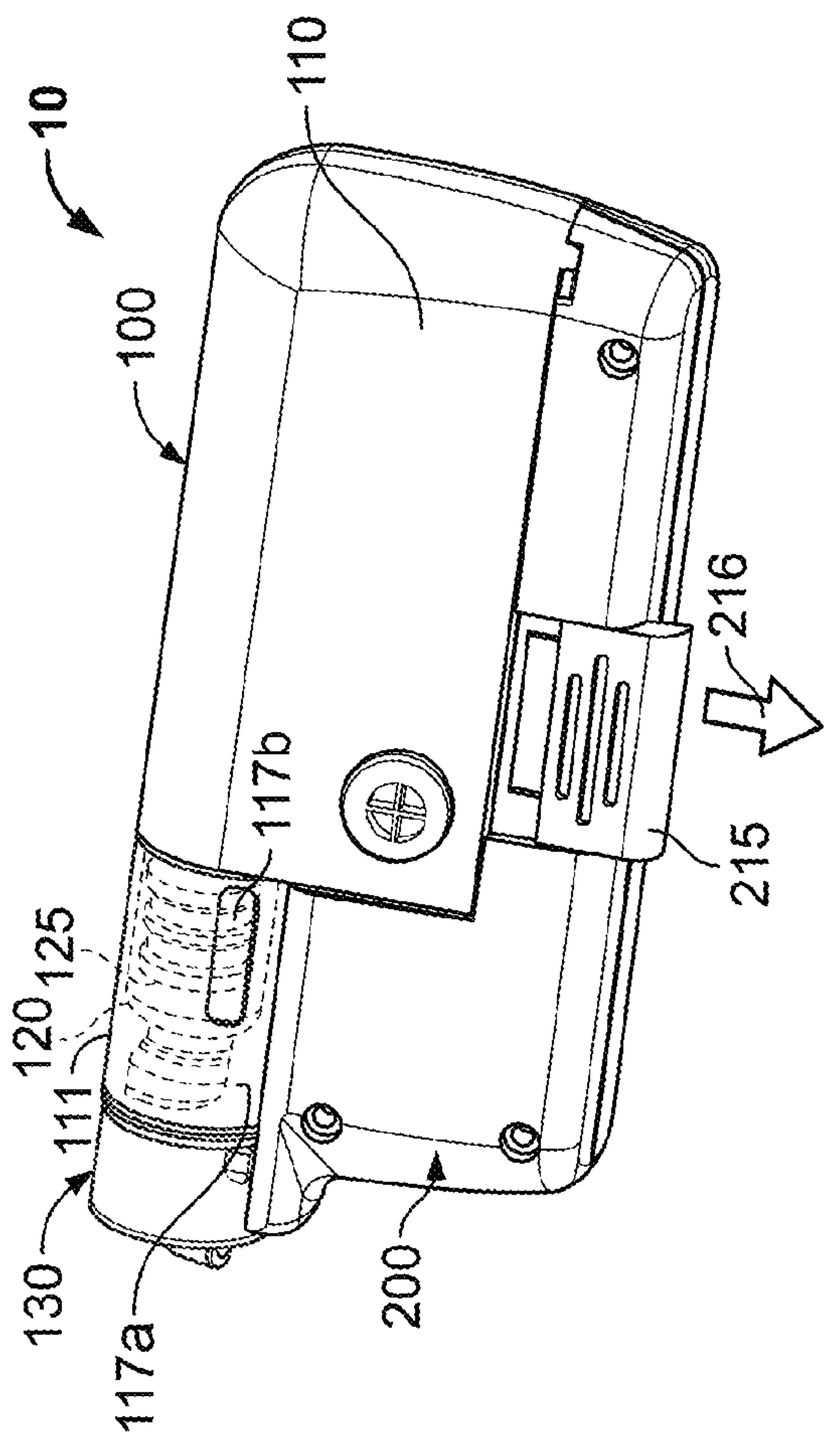
10
100
110
216
215
117b
125
120
111
130
117a
200

FIG. 11

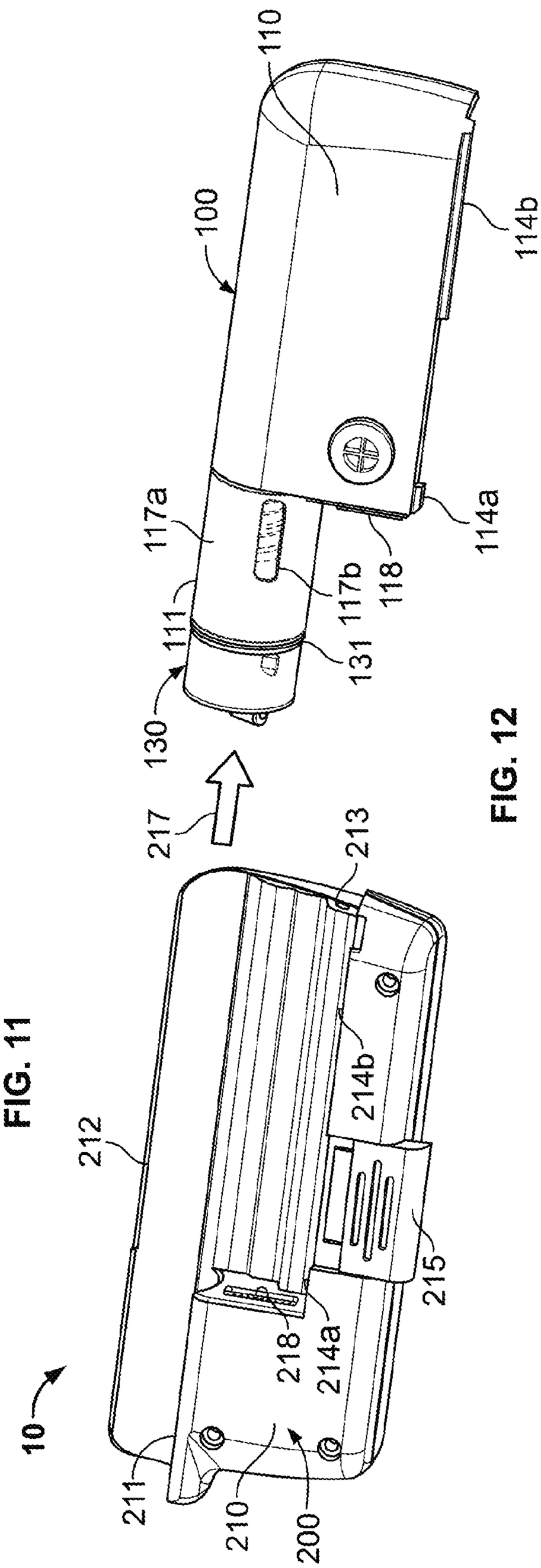
110
100
114b
117a
114a
117b
118
111
131
130
217
213
212
214b
215
218
214a
10
211
210
200

FIG. 12

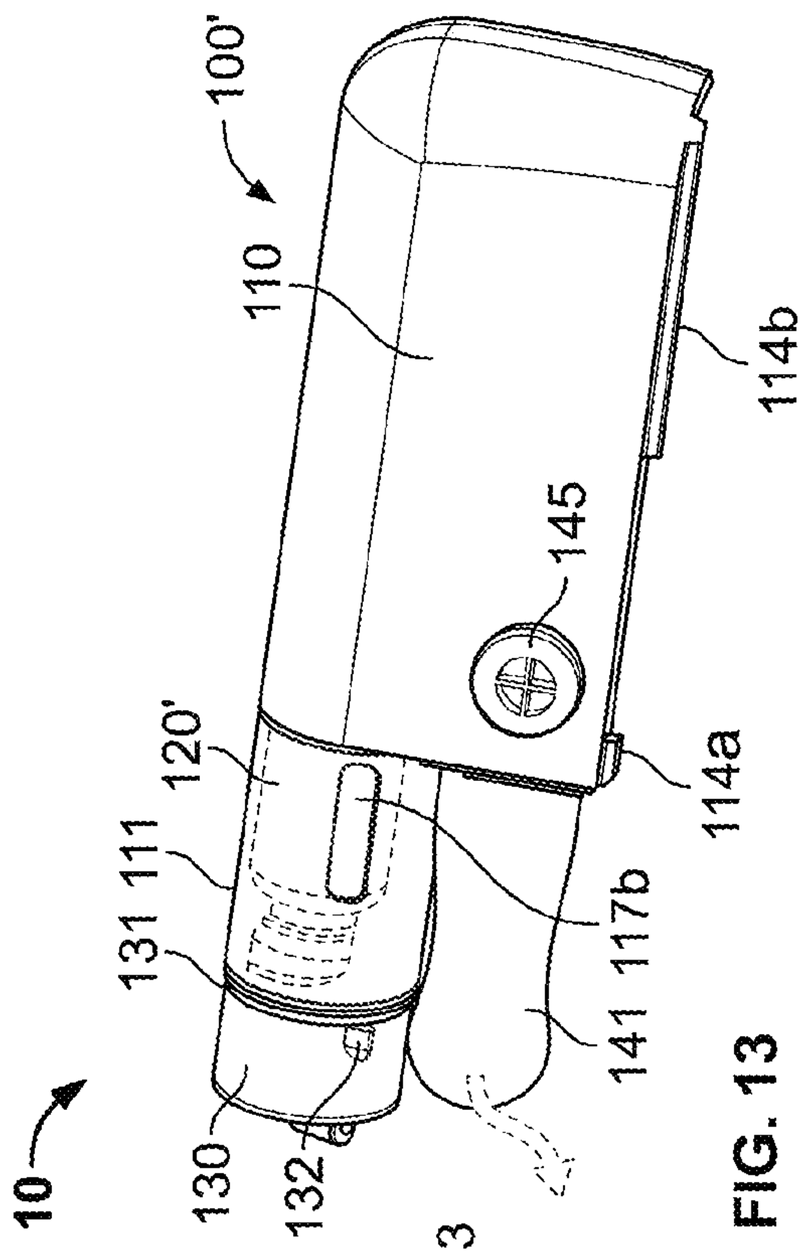
100'
110
114b
145
120'
114a
131 111
117b
141
130
132
10

FIG. 13

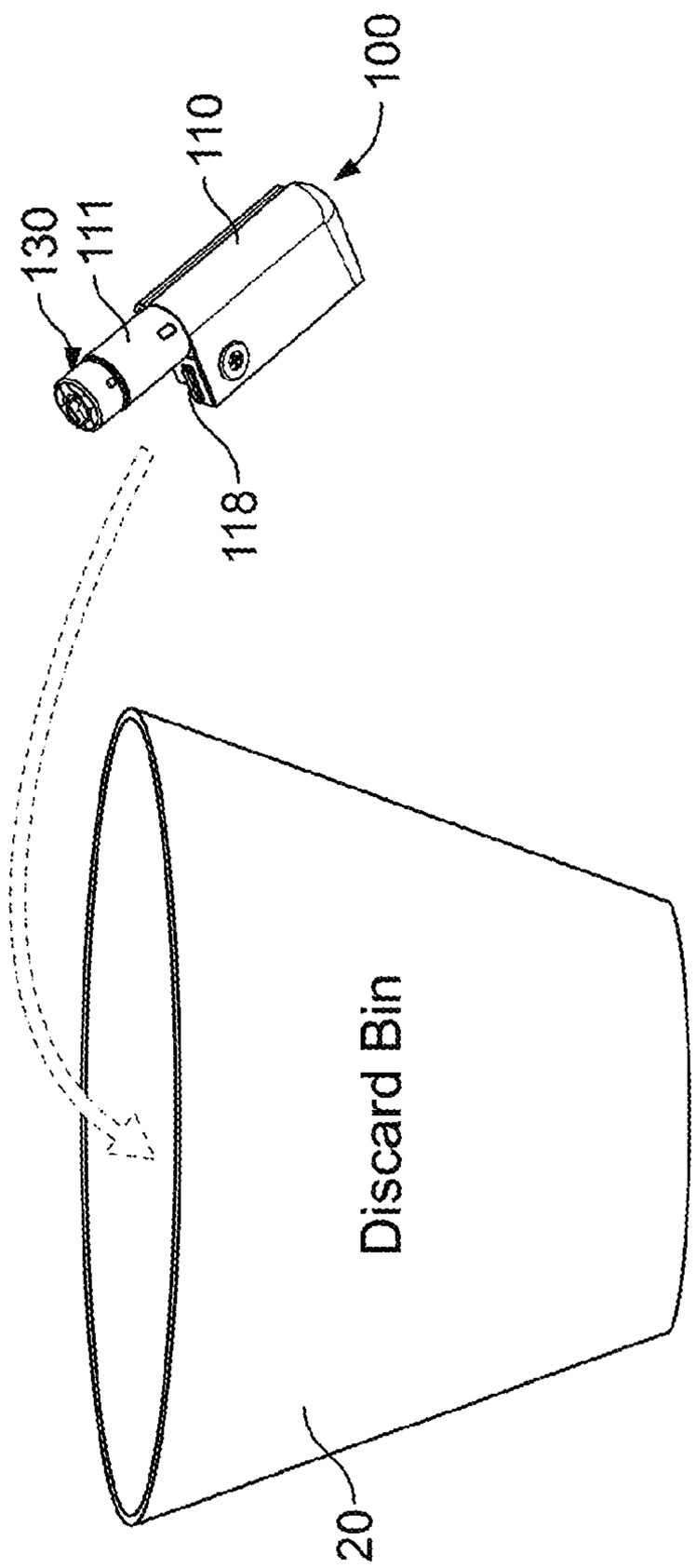
100
110
130
111
118
Discard Bin
20

FIG. 14

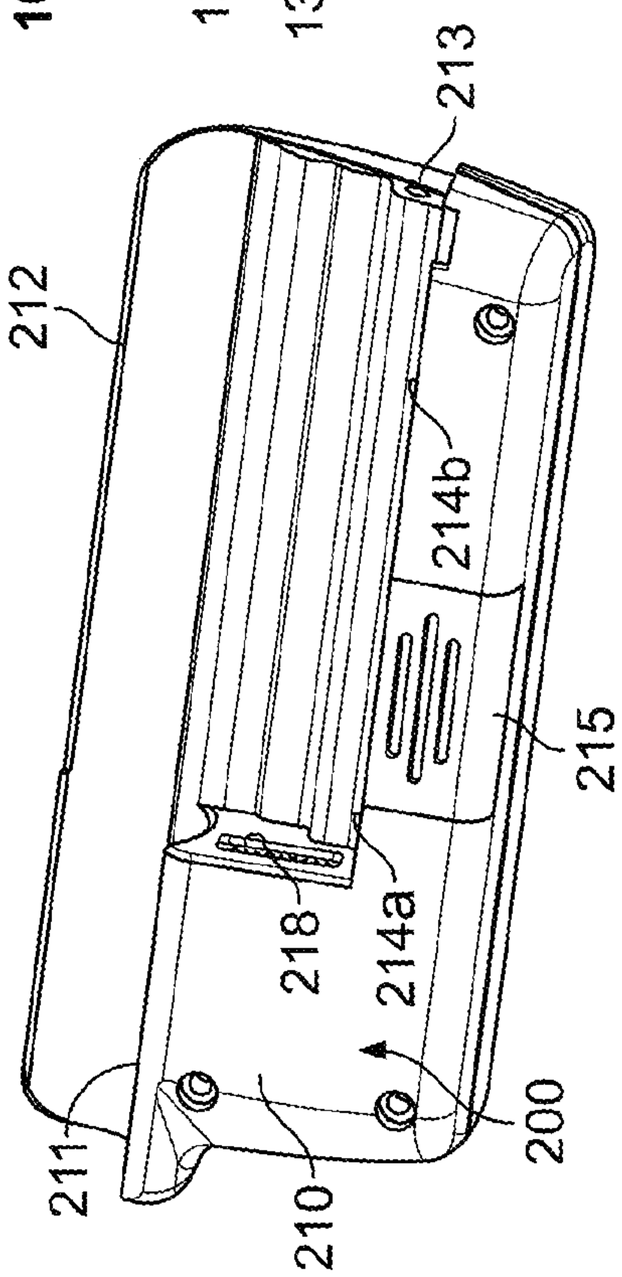
213
212
214b
215
218
214a
200
211
210

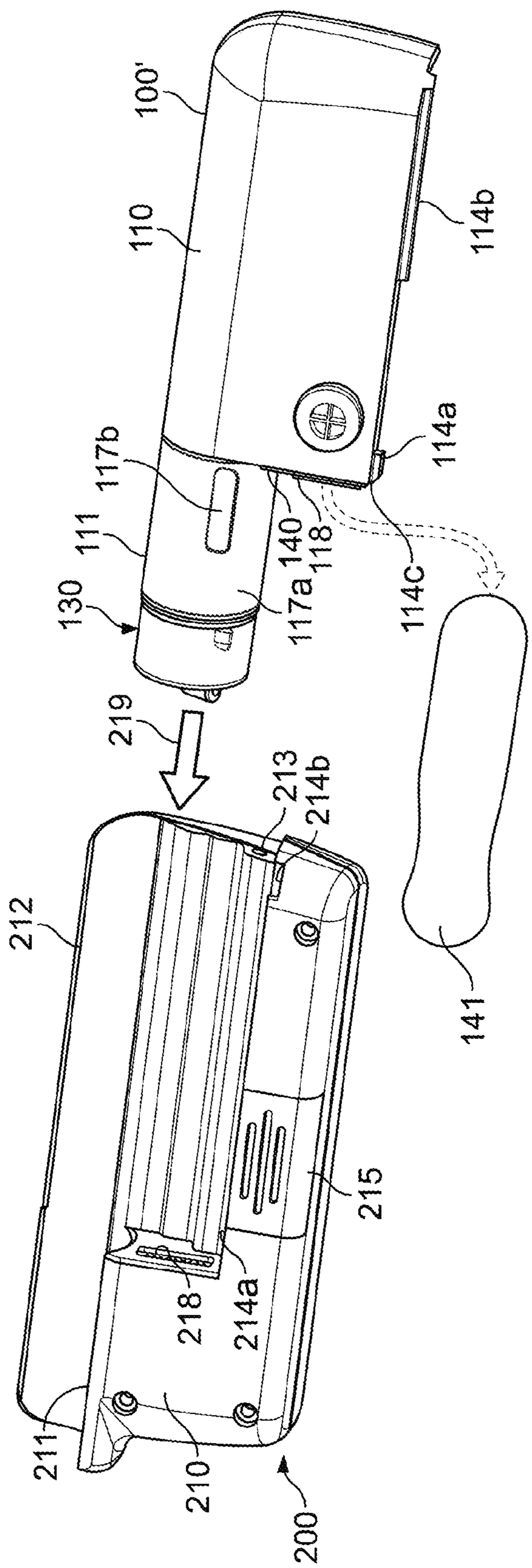
100'
110
114b
114a
117b
111
140
118
117a
114c
130
219
213
214b
212
141
215
218
214a
211
210
200

FIG. 15

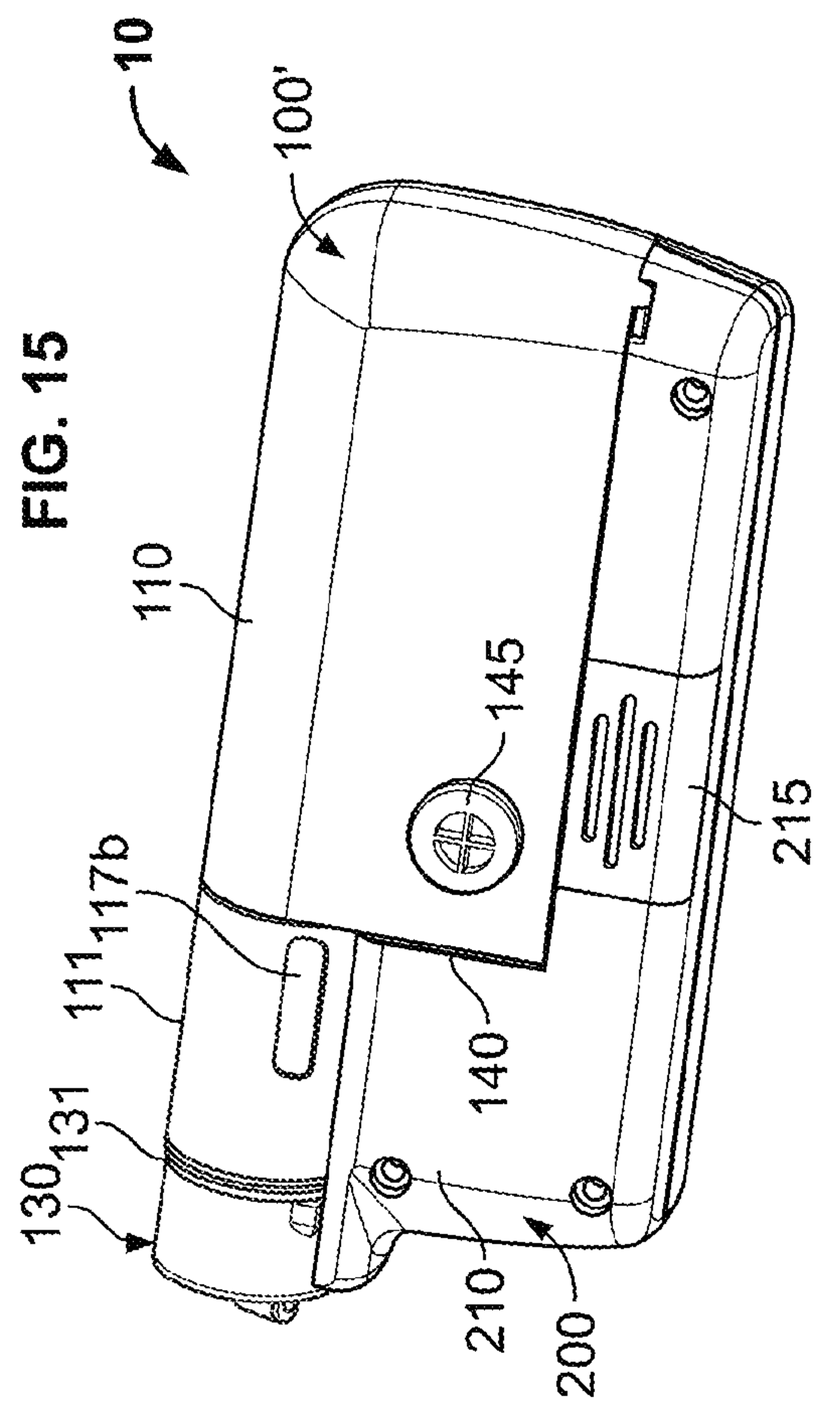
10
100'
110
145
215
111
117b
140
131
130
210
200

FIG. 16

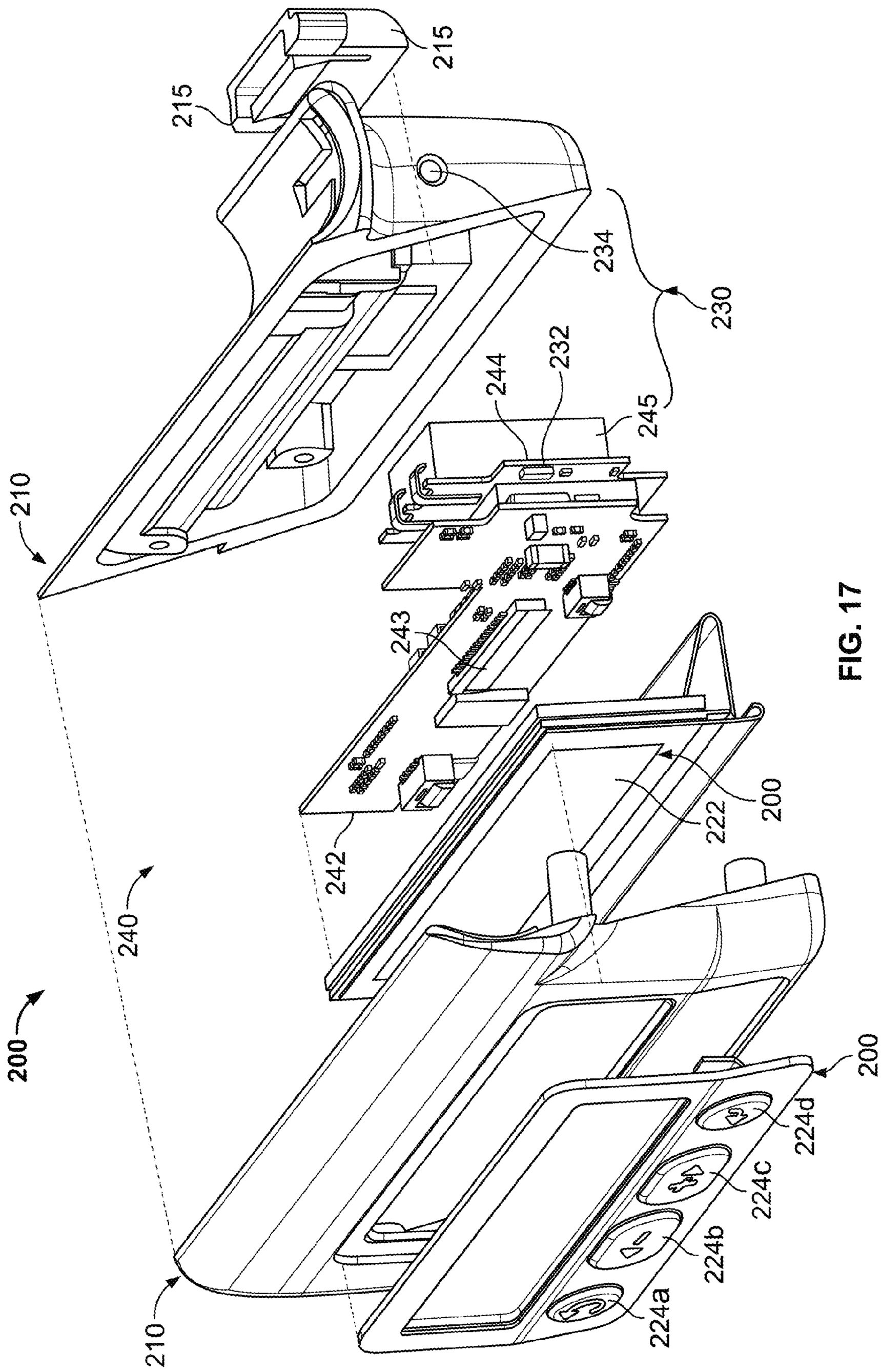
215
215
234
230
244
232
245
210
243
200
222
242
240
200
200
224d
224c
224b
224a
210

FIG. 17

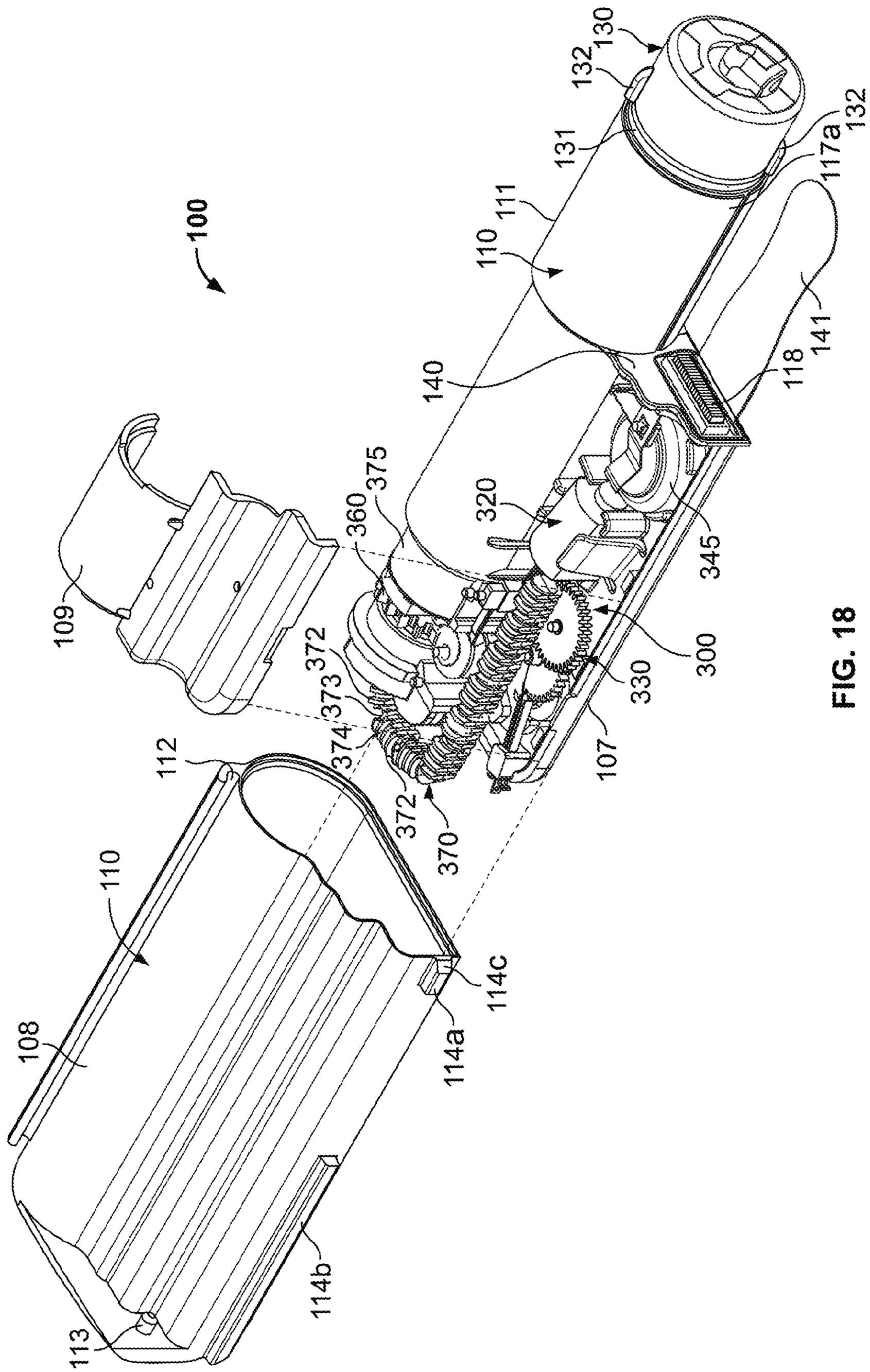
100
130
132
131
111
110
132
117a
141
118
140
345
320
375
360
109
300
330
107
372
373
374
112
372
370
110
108
114c
114a
114b
113

FIG. 18

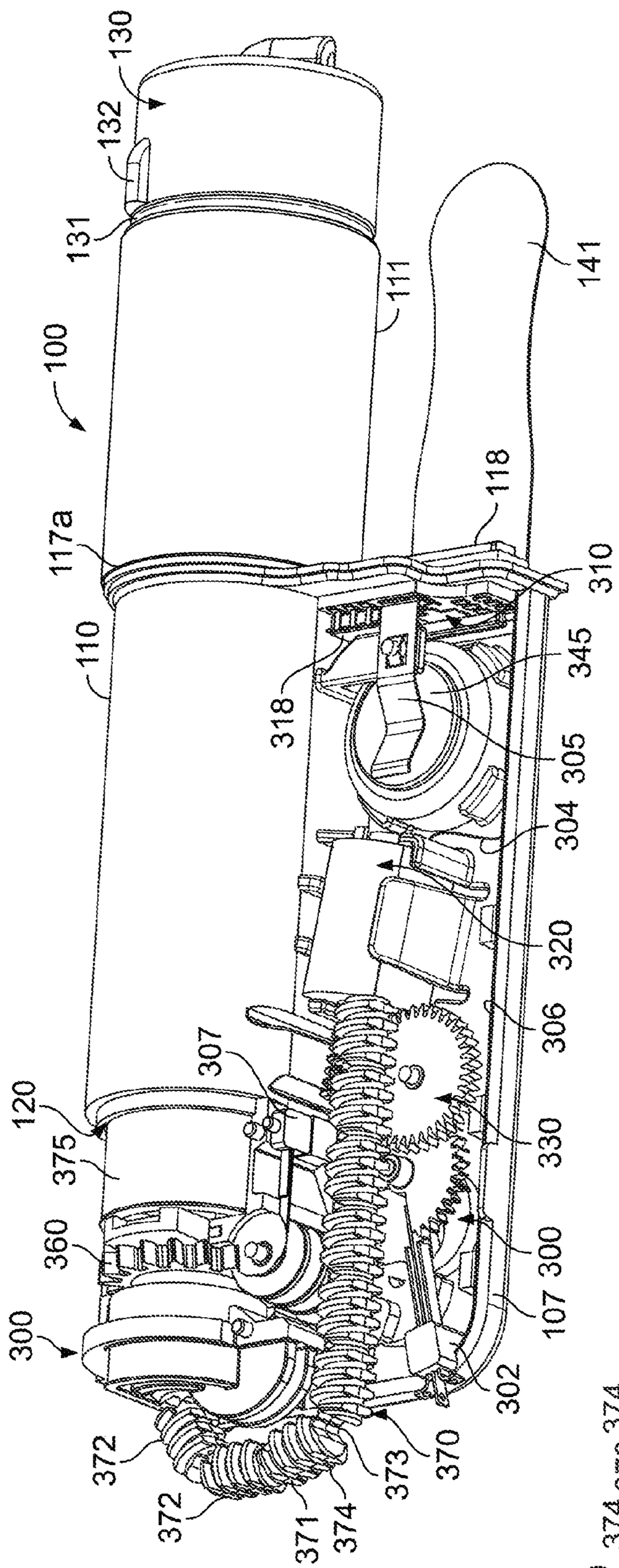
130
132
131
100
111
141
117a
118
110
310
318
345
305
304
320
306
307
330
120
375
360
300
107
300
302
372
372
371
374
373
370

FIG. 19

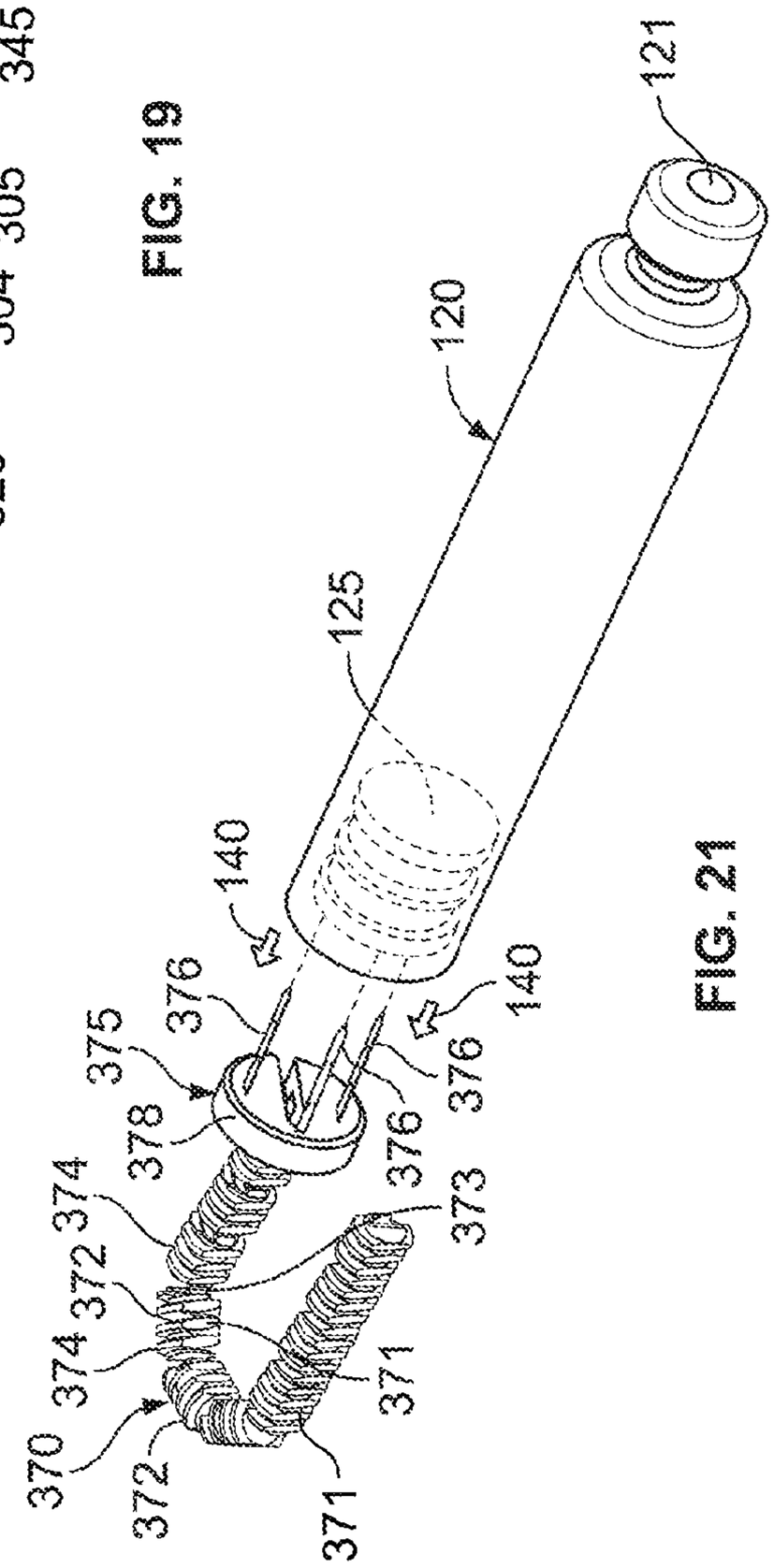
121
120
125
140
140
376
376
376
375
378
373
374
372
374
371
370
372
371

FIG. 21

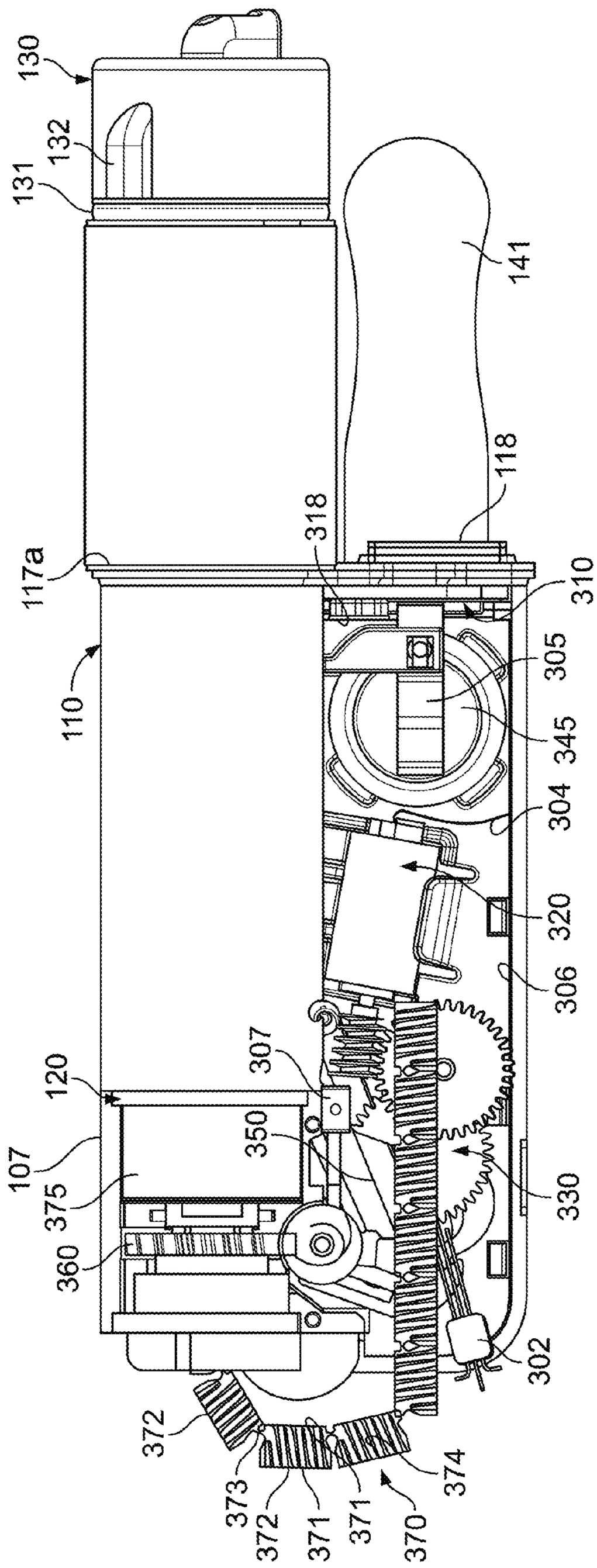
130
132
131
141
118
318
117a
310
305
110
345
304
320
306
307
120
350
107
375
330
360
302
372
373
372
371
371
370
374

FIG. 20

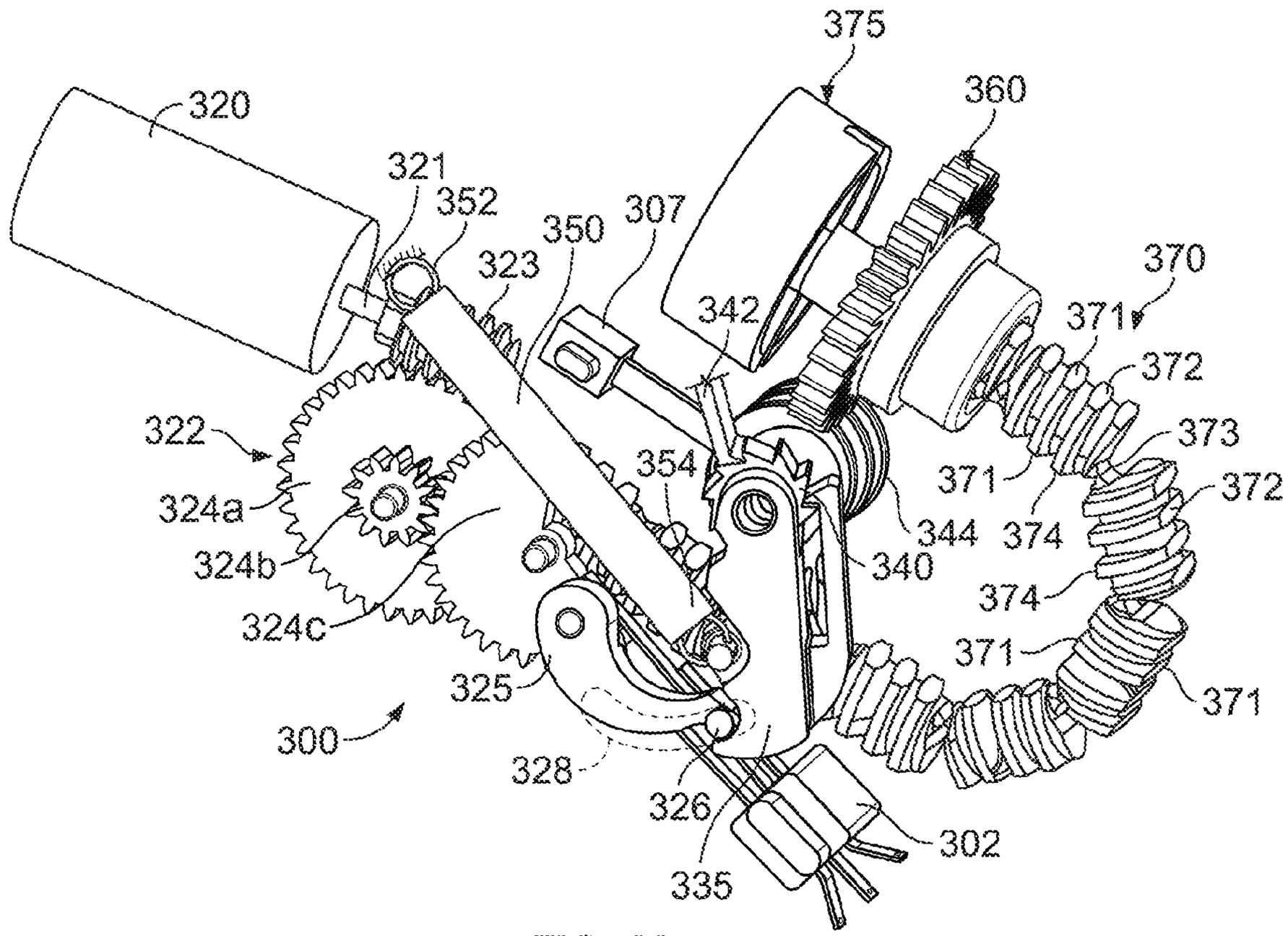
375
360
320
321
352
350
307
323
370
342
371
372
322
373
354
371
372
324a
344
374
324b
340
374
324c
371
325
371
300
328
326
302
335

FIG. 22

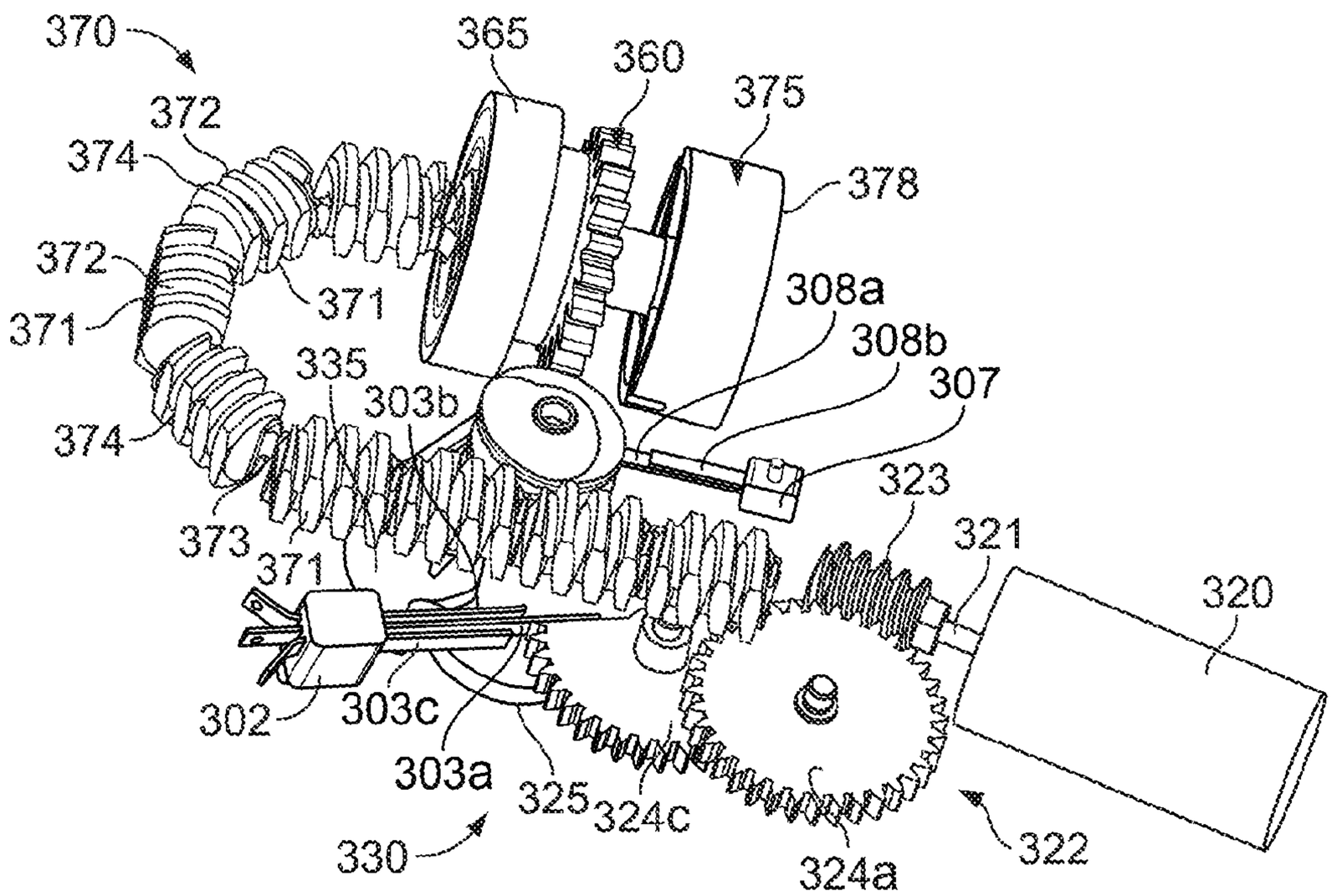
370
365
360
375
372
374
378
372
308a
371
371
308b
335
307
303b
374
323
373
321
371
320
302
303c
303a
325
324c
330
324a
322

FIG. 23

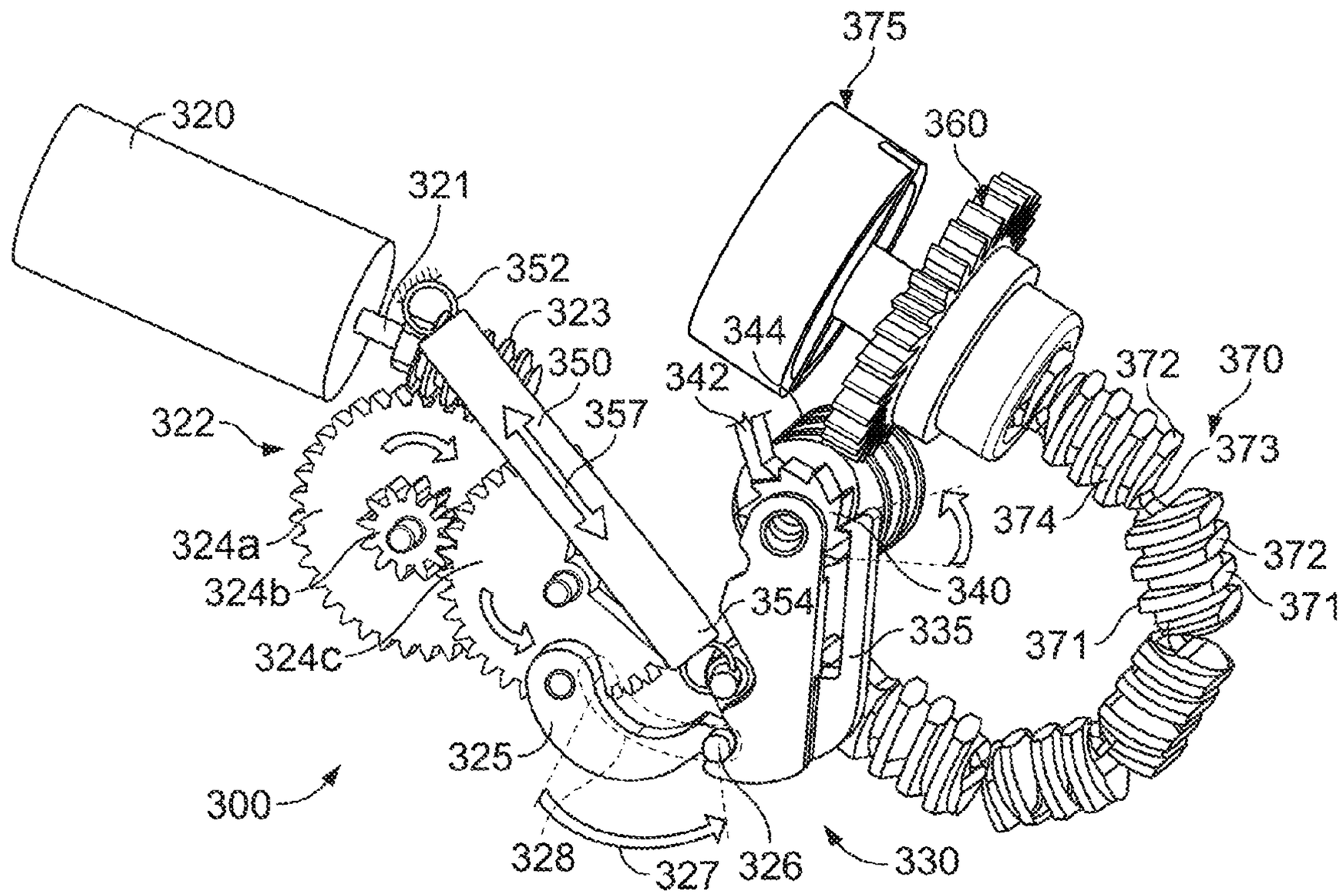
375
360
320
321
352
323
350
344
342
357
372
370
322
373
374
324a
372
324b
340
354
371
324c
335
371
325
300
328
327
326
330

FIG. 24

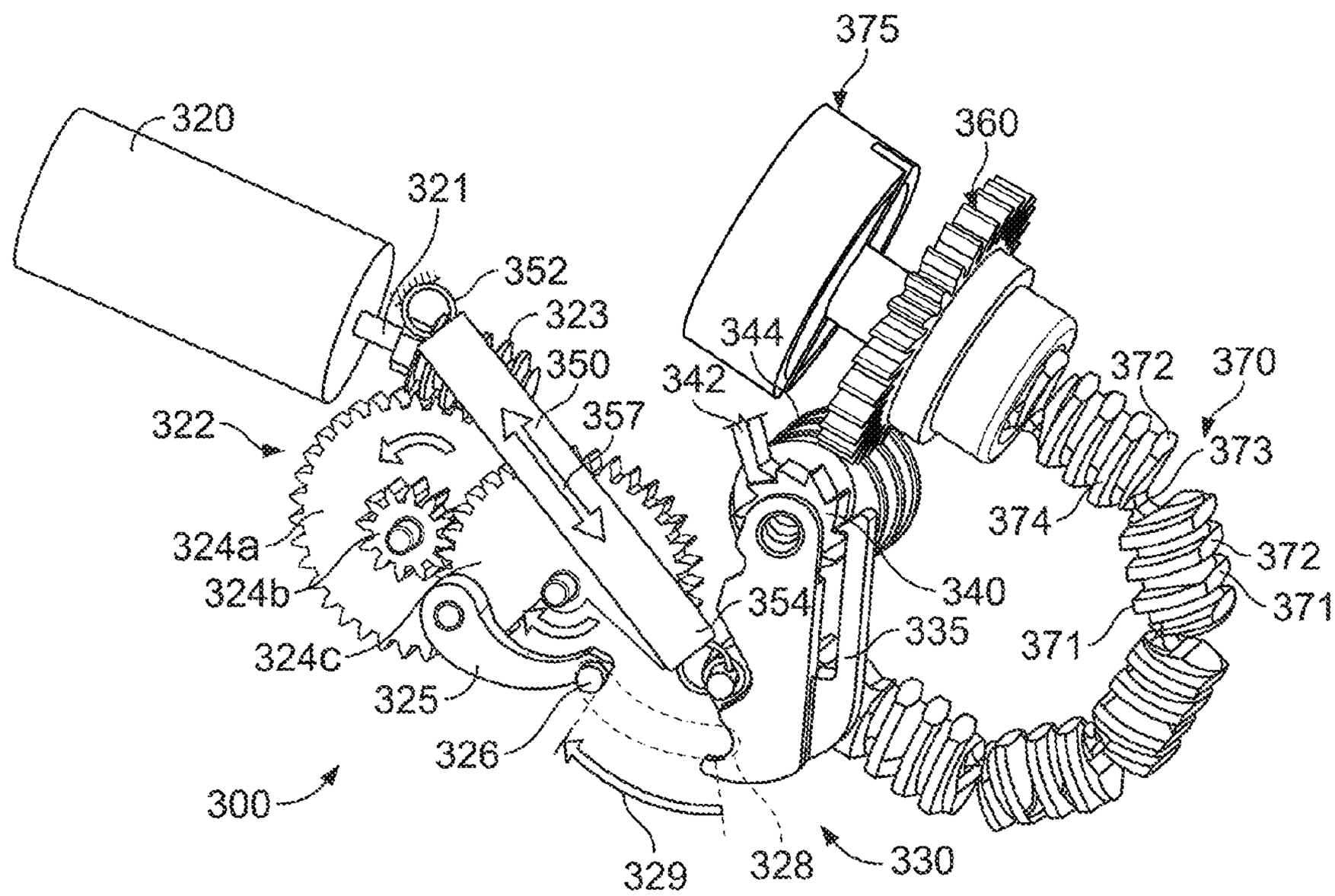
375
360
320
321
352
323
344
350
342
372
370
357
322
373
374
324a
372
324b
340
354
371
324c
335
371
325
326
300
329
328
330

FIG. 25

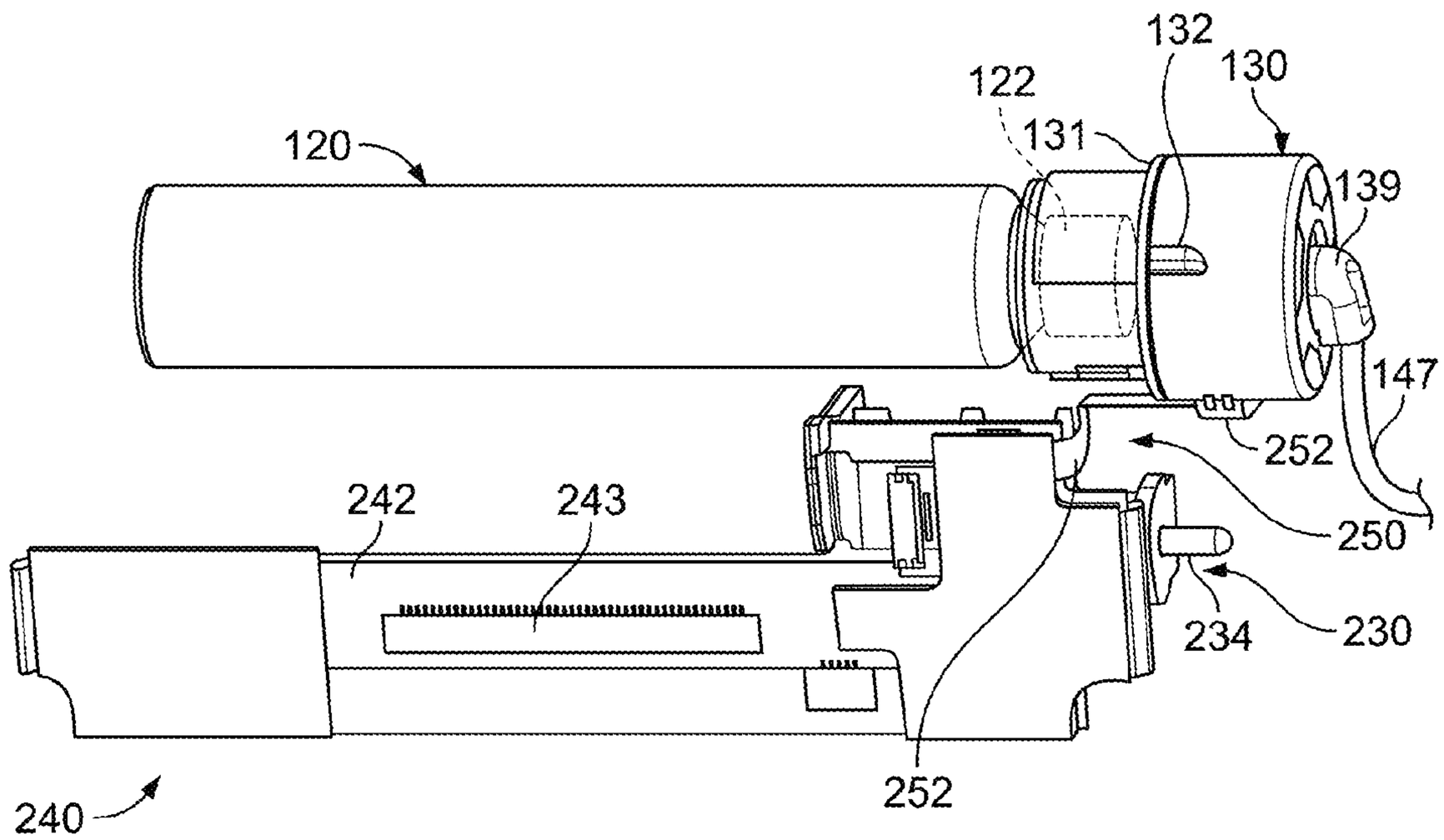
132
130
122
131
120
139
147
252
250
242
243
234
230
252
240

FIG. 26

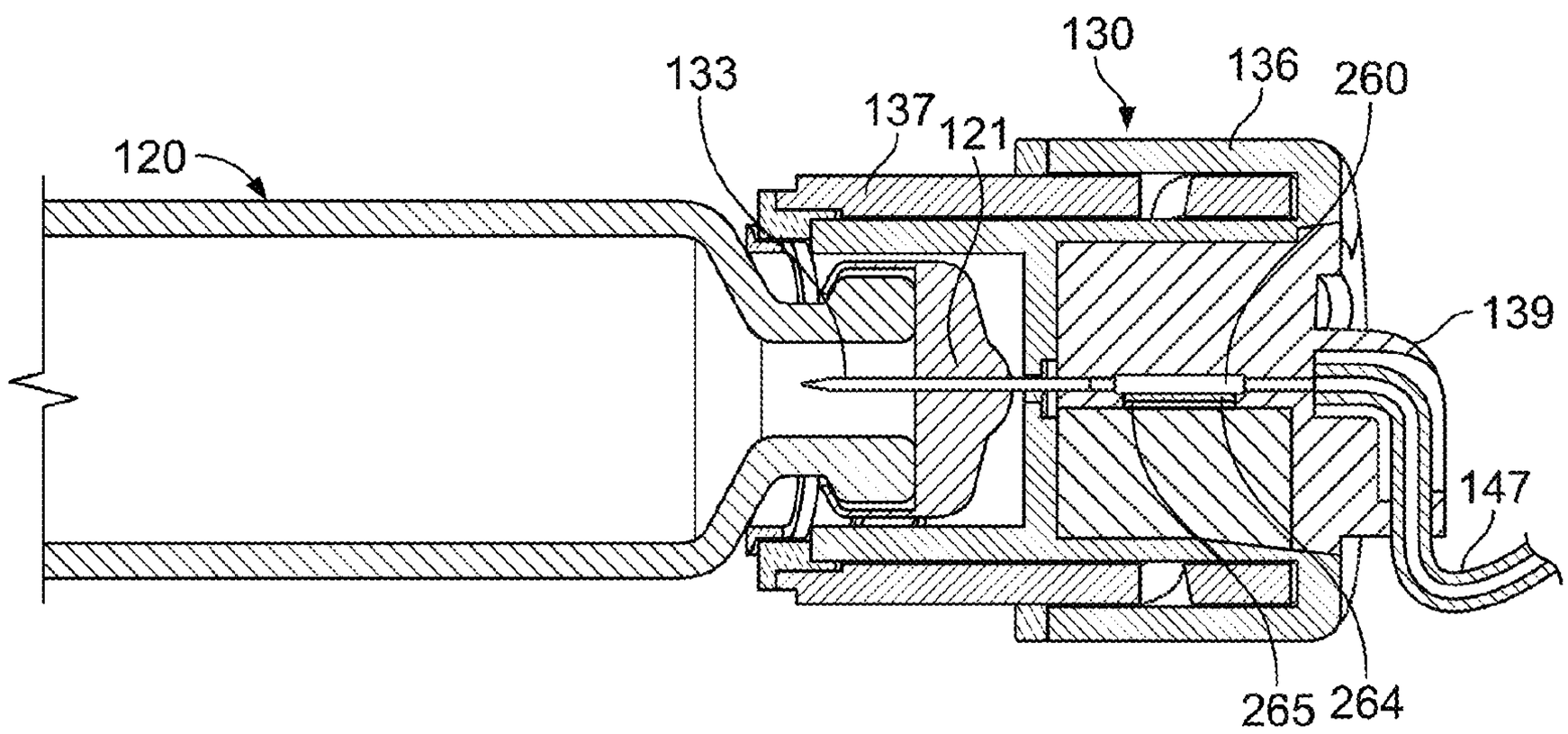
130
133
136
260
137
121
120
139
147
265
264

FIG. 27

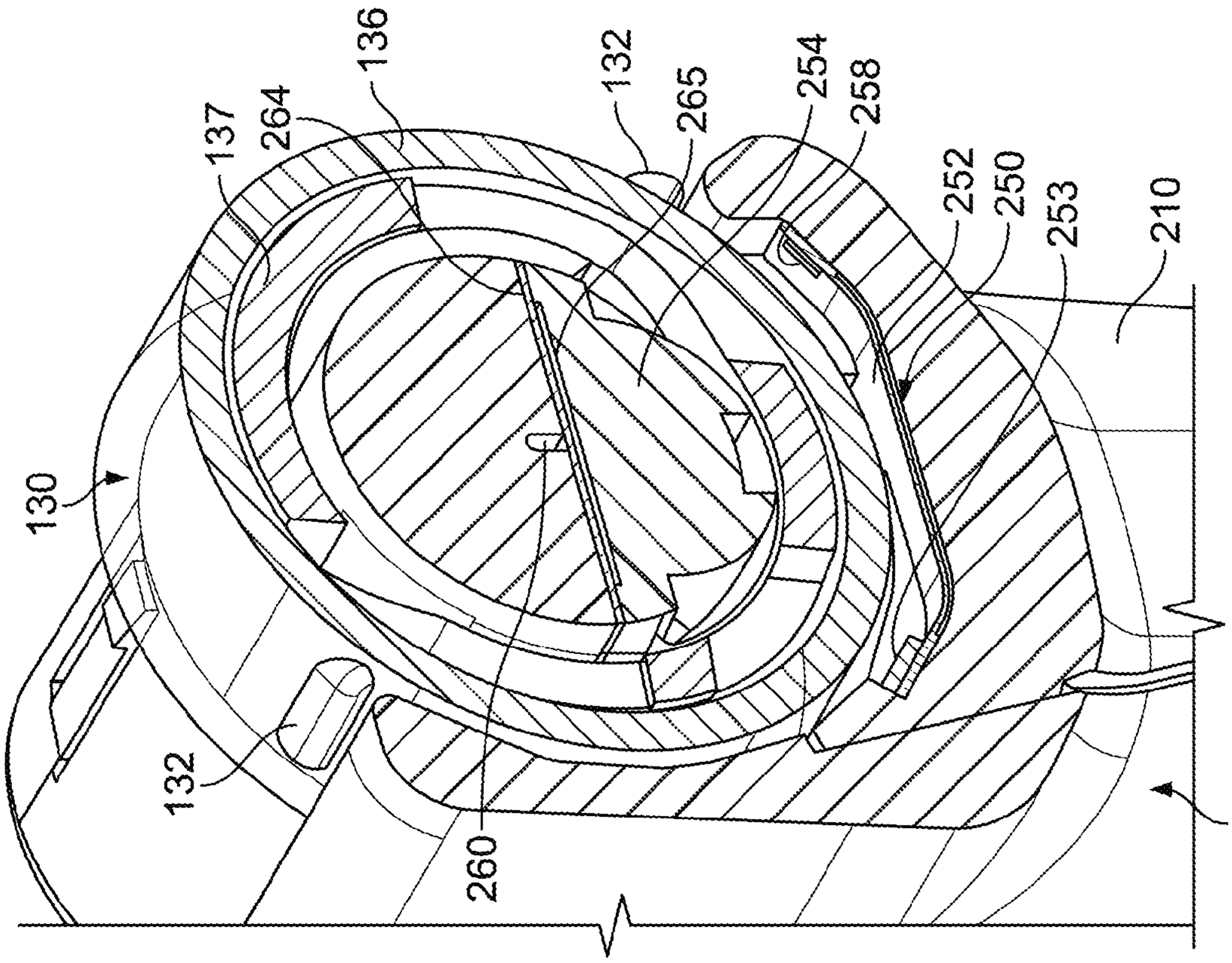
130
137
264
136
132
265
254
258
252
250
253
210
132
260
200

FIG. 29

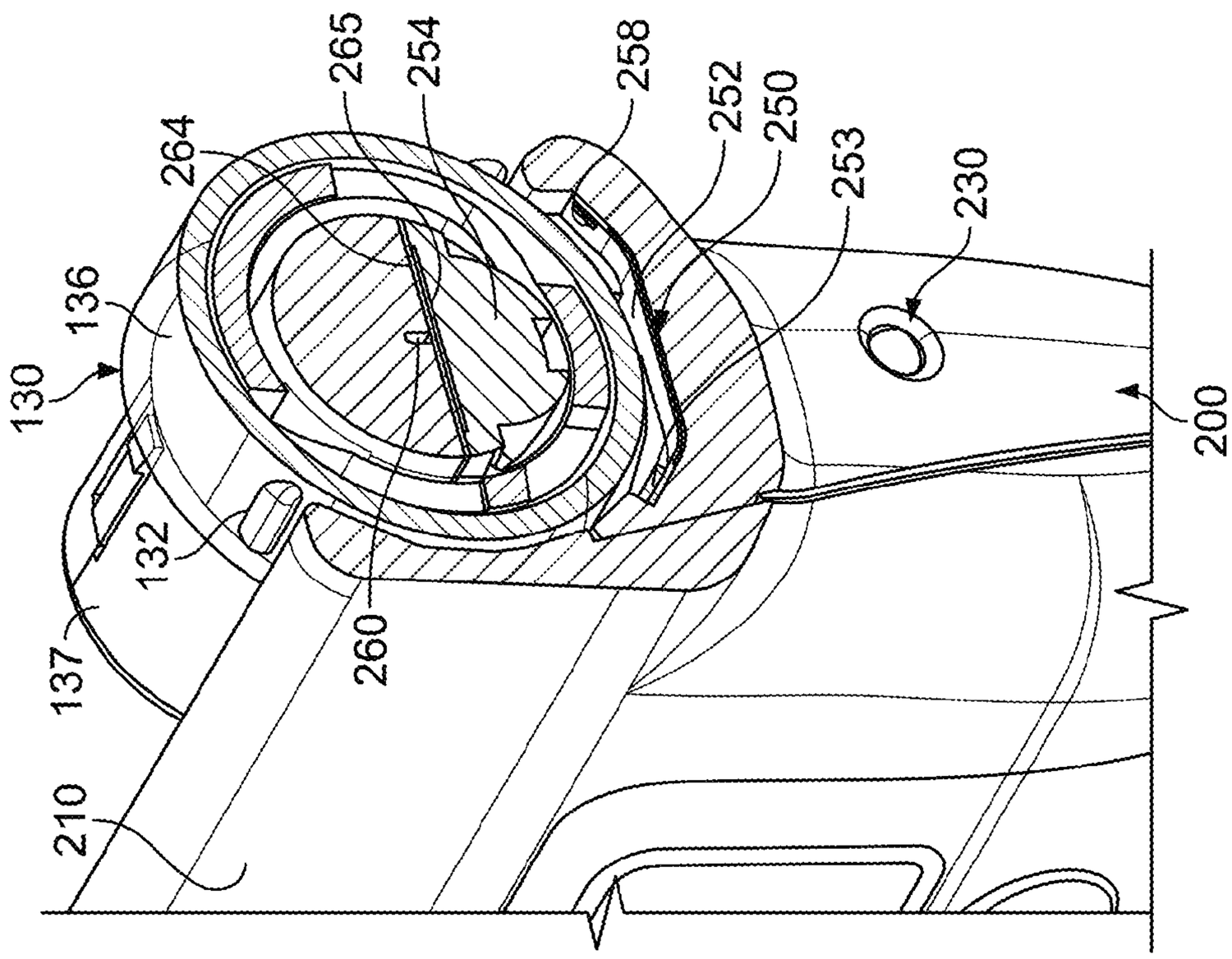
130
136
264
265
254
258
252
250
253
230
132
137
260
210
200

FIG. 28

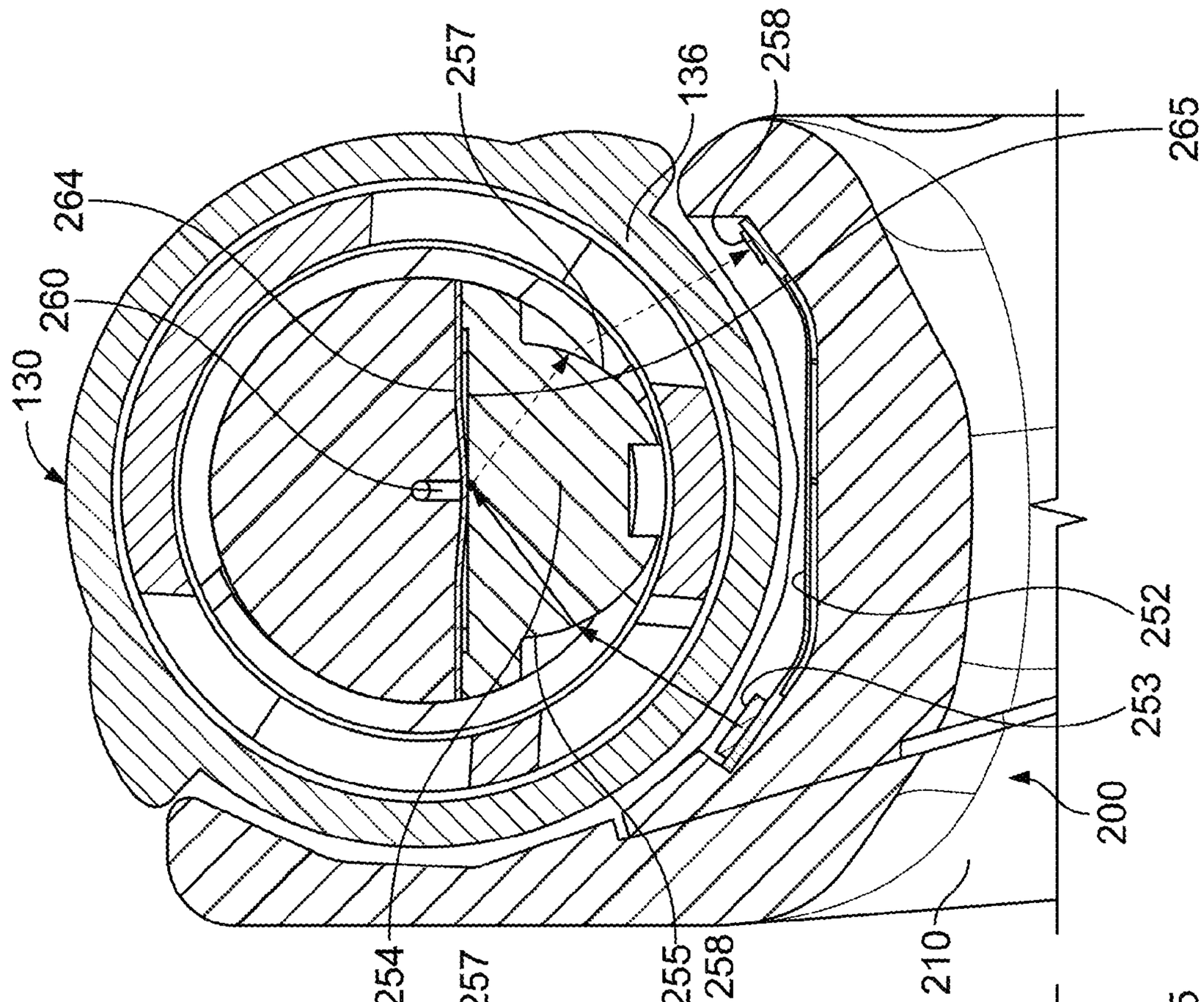
130
264
260
257
136
258
265
252
253
200
210
254
255

FIG. 31

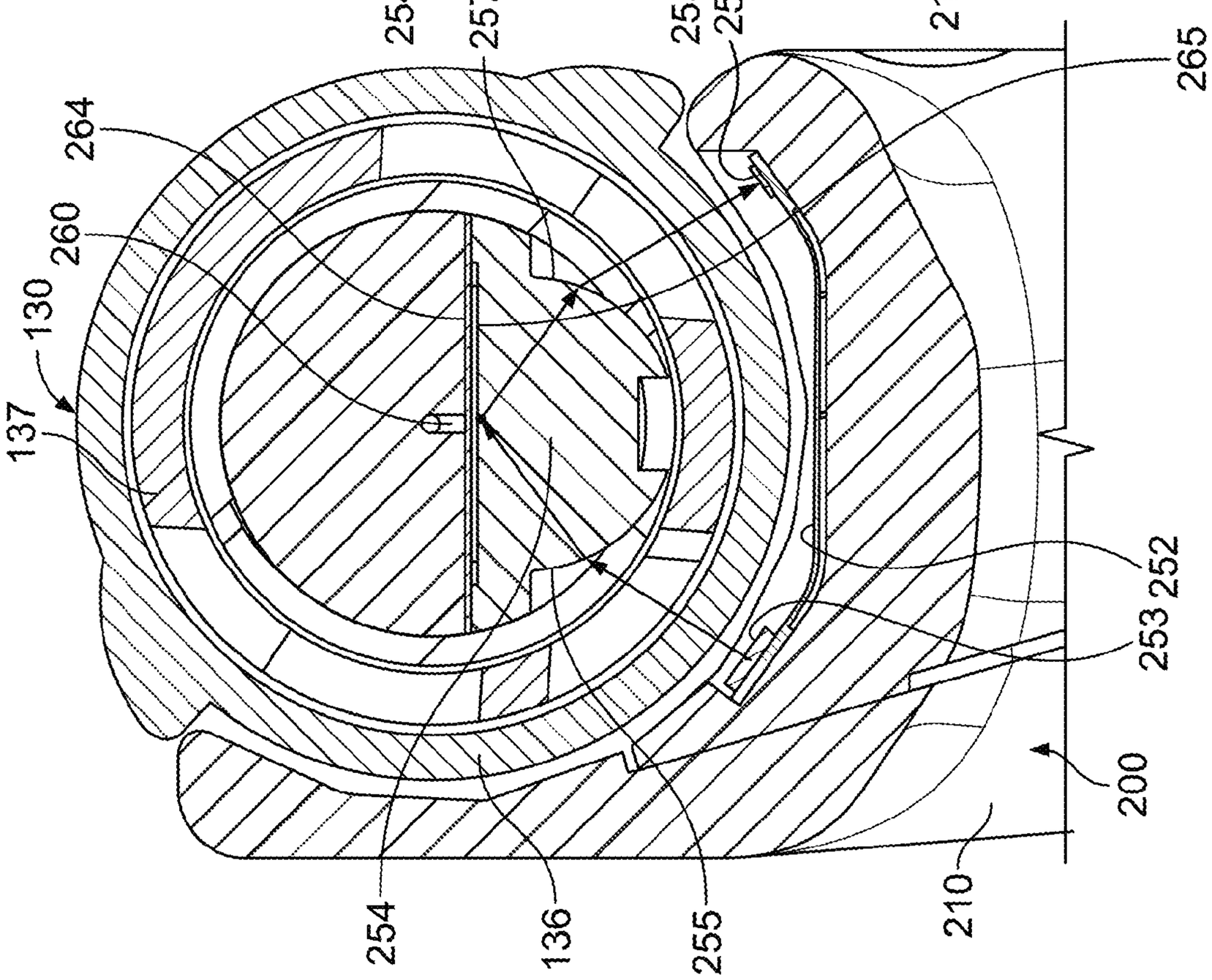
137
130
264
260
257
258
265
252
253
200
210
254
136
255

FIG. 30

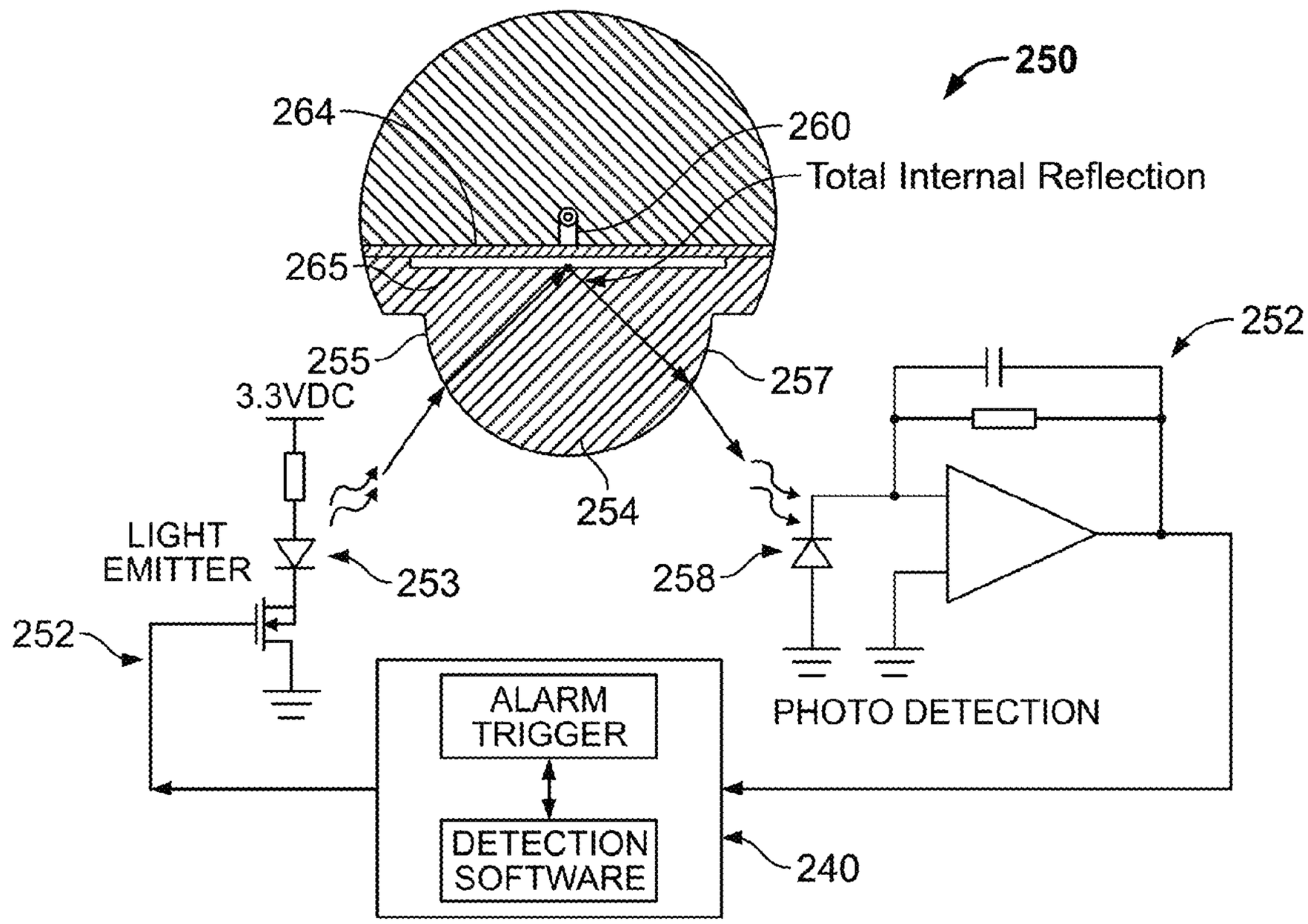
250
264
260
Total Internal Reflection
265
252
255
257
3.3VDC
254
LIGHT
EMITTER
253
258
252
ALARM
TRIGGER
PHOTO DETECTION
DETECTION
SOFTWARE
240

FIG. 32

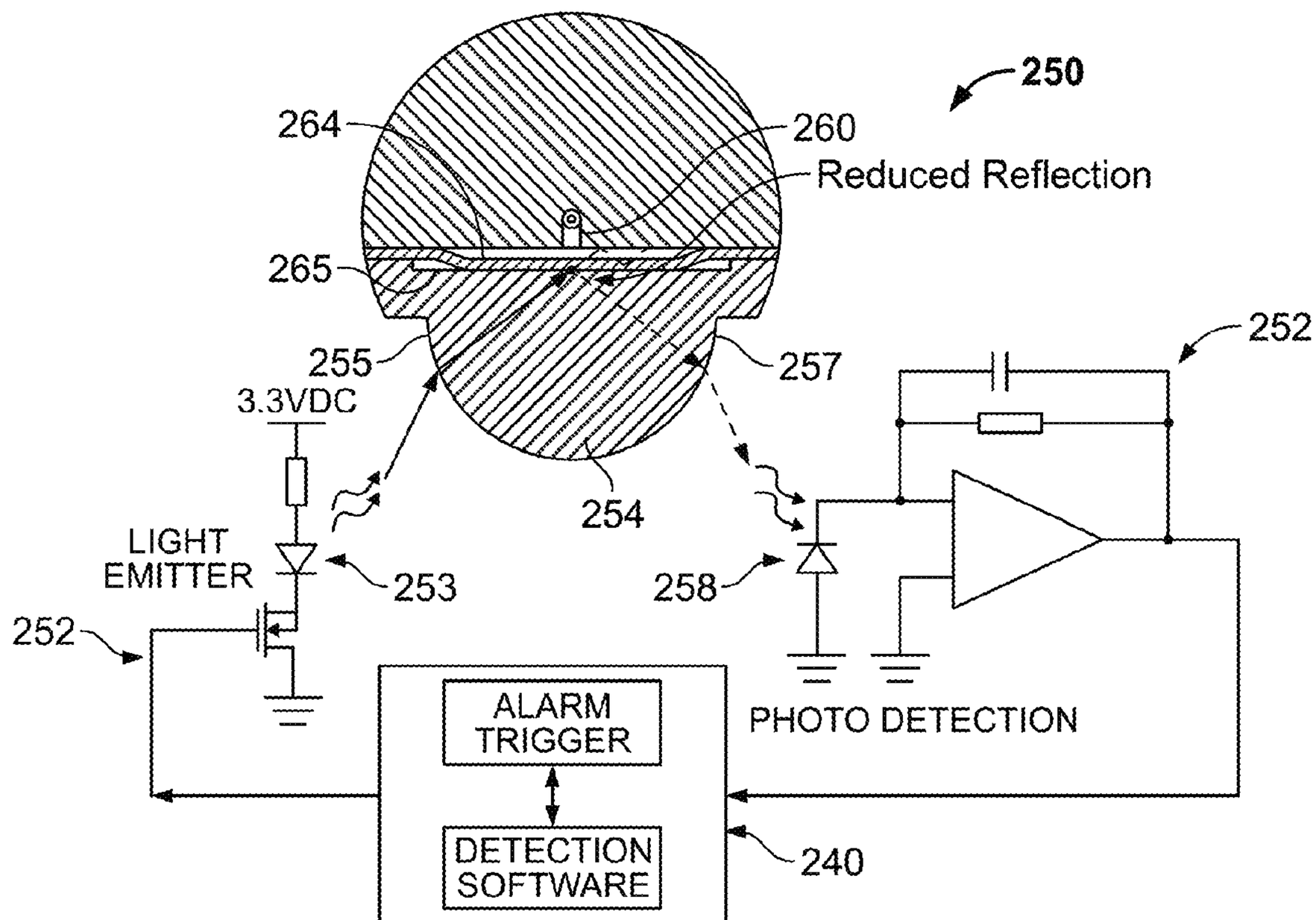
250
264
260
Reduced Reflection
265
252
255
257
3.3VDC
254
LIGHT
EMITTER
253
258
252
ALARM
TRIGGER
PHOTO DETECTION
DETECTION
SOFTWARE
240

FIG. 33

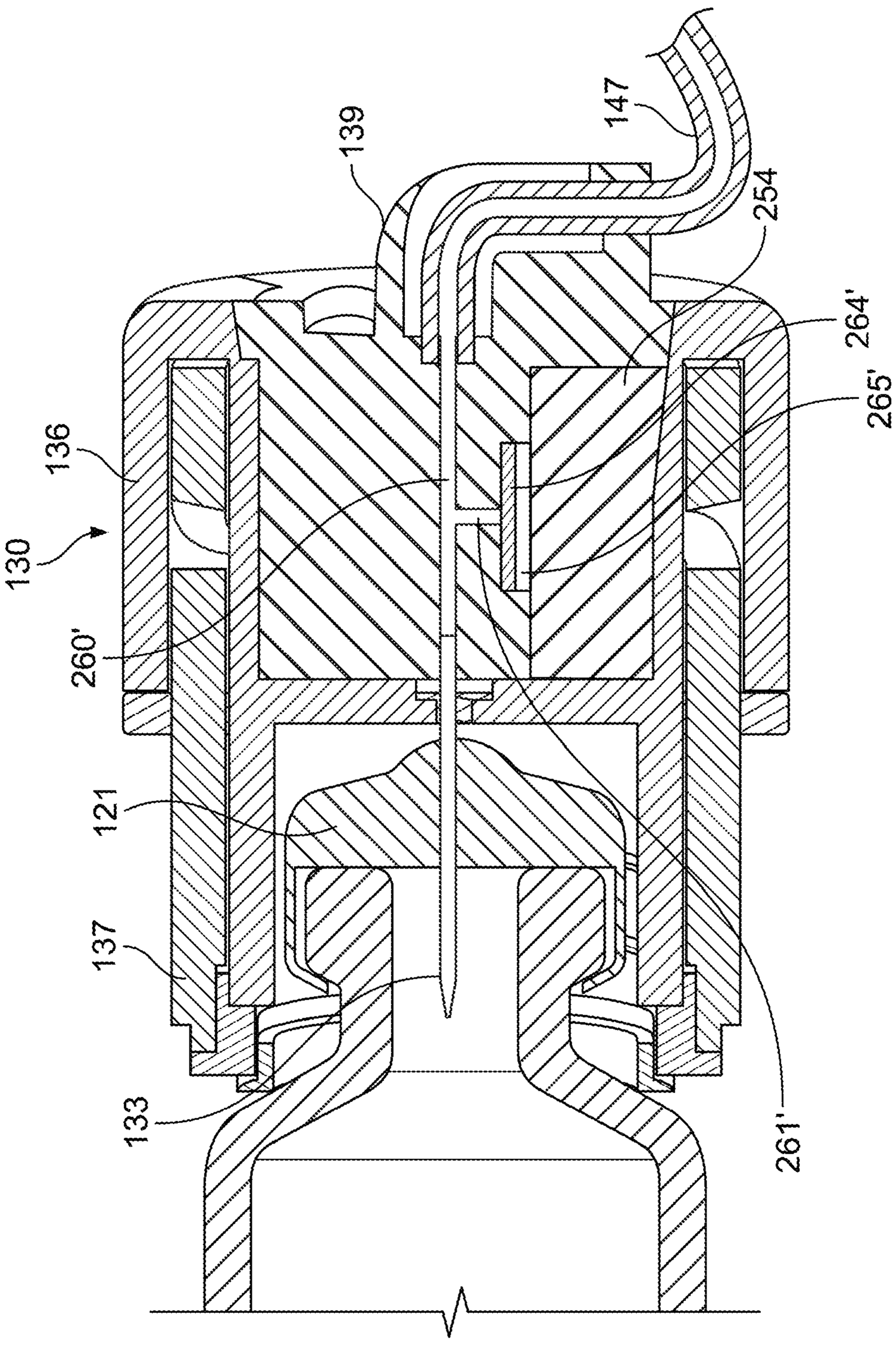

FIG. 34

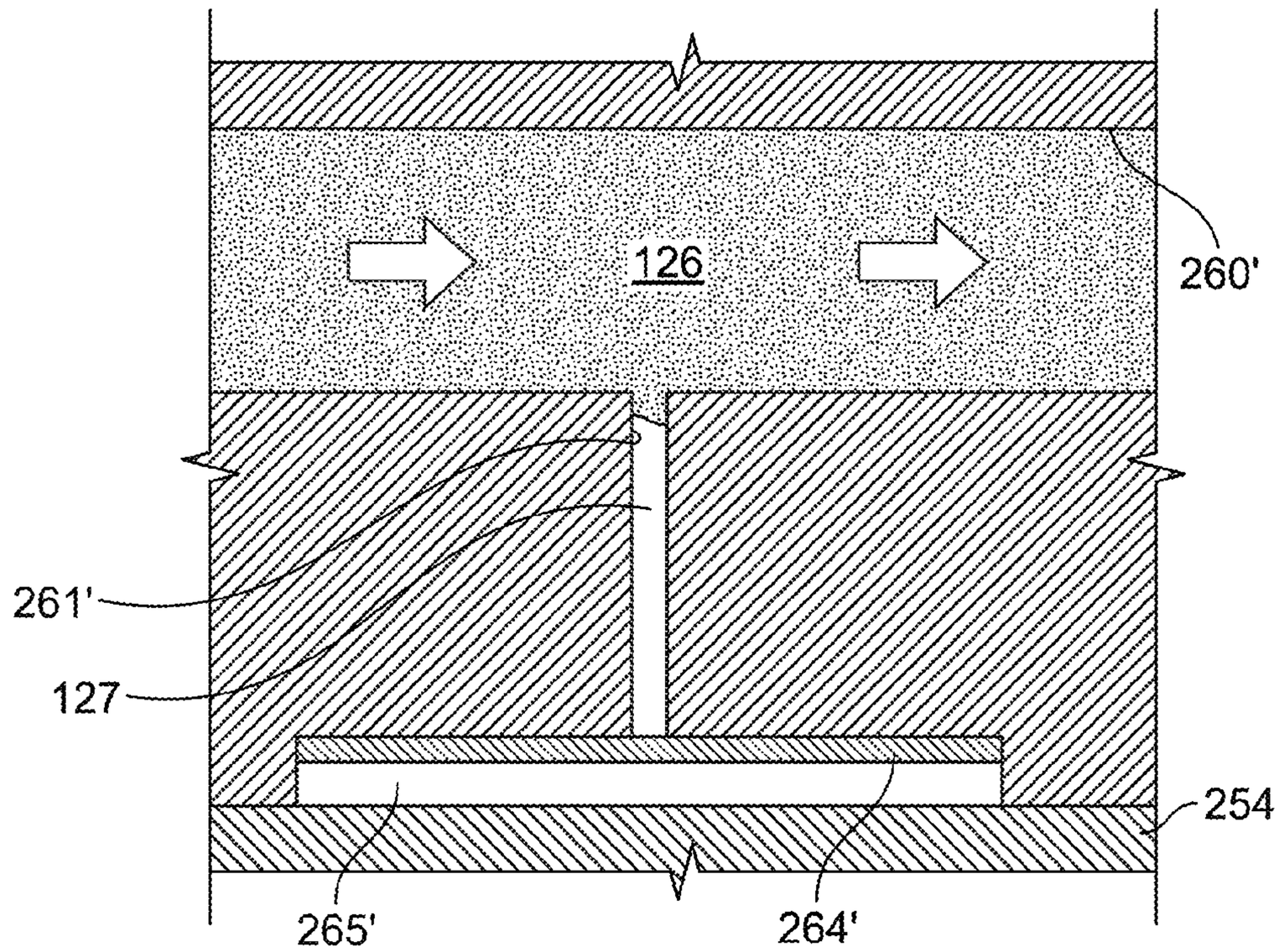

FIG. 35

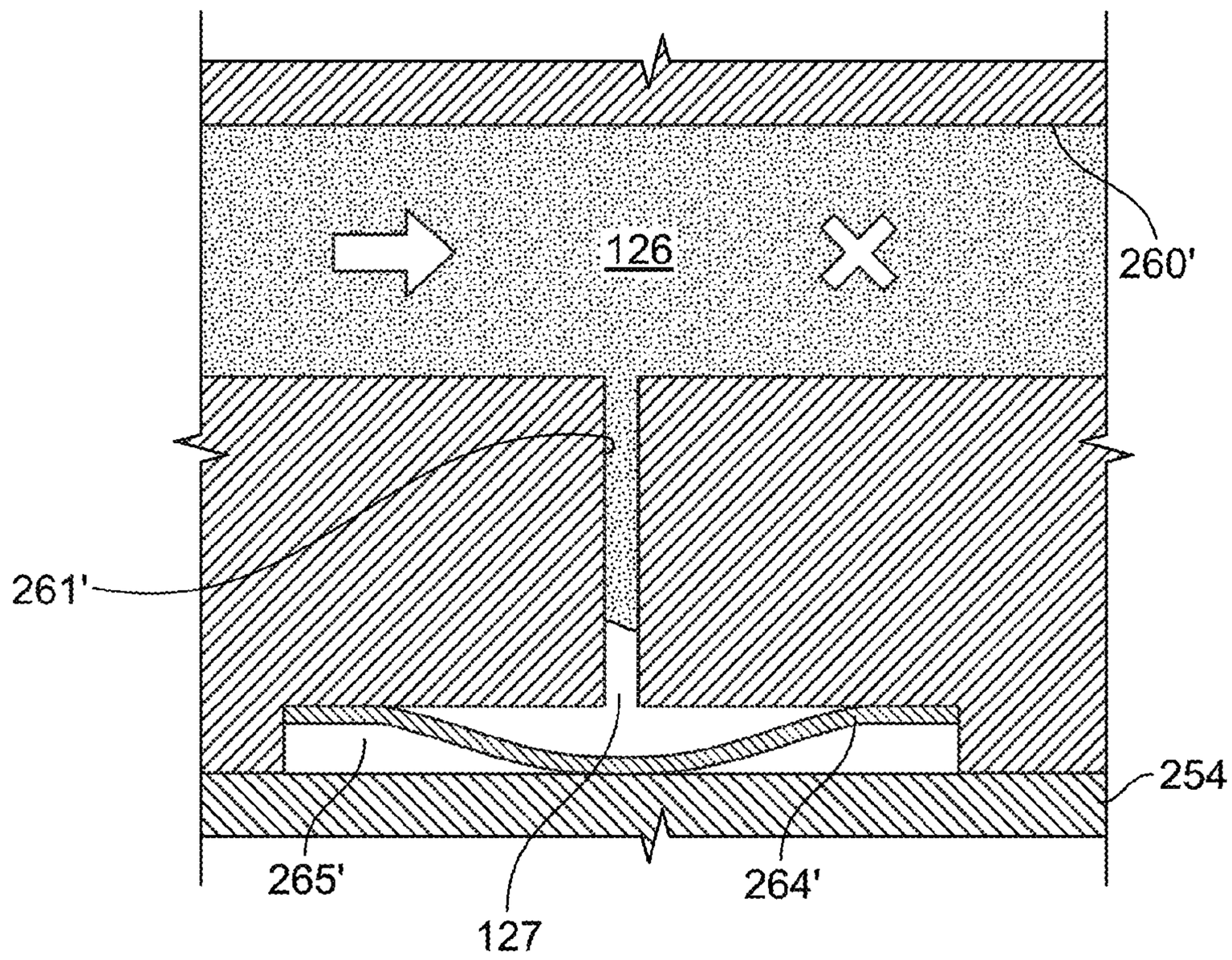

FIG. 36

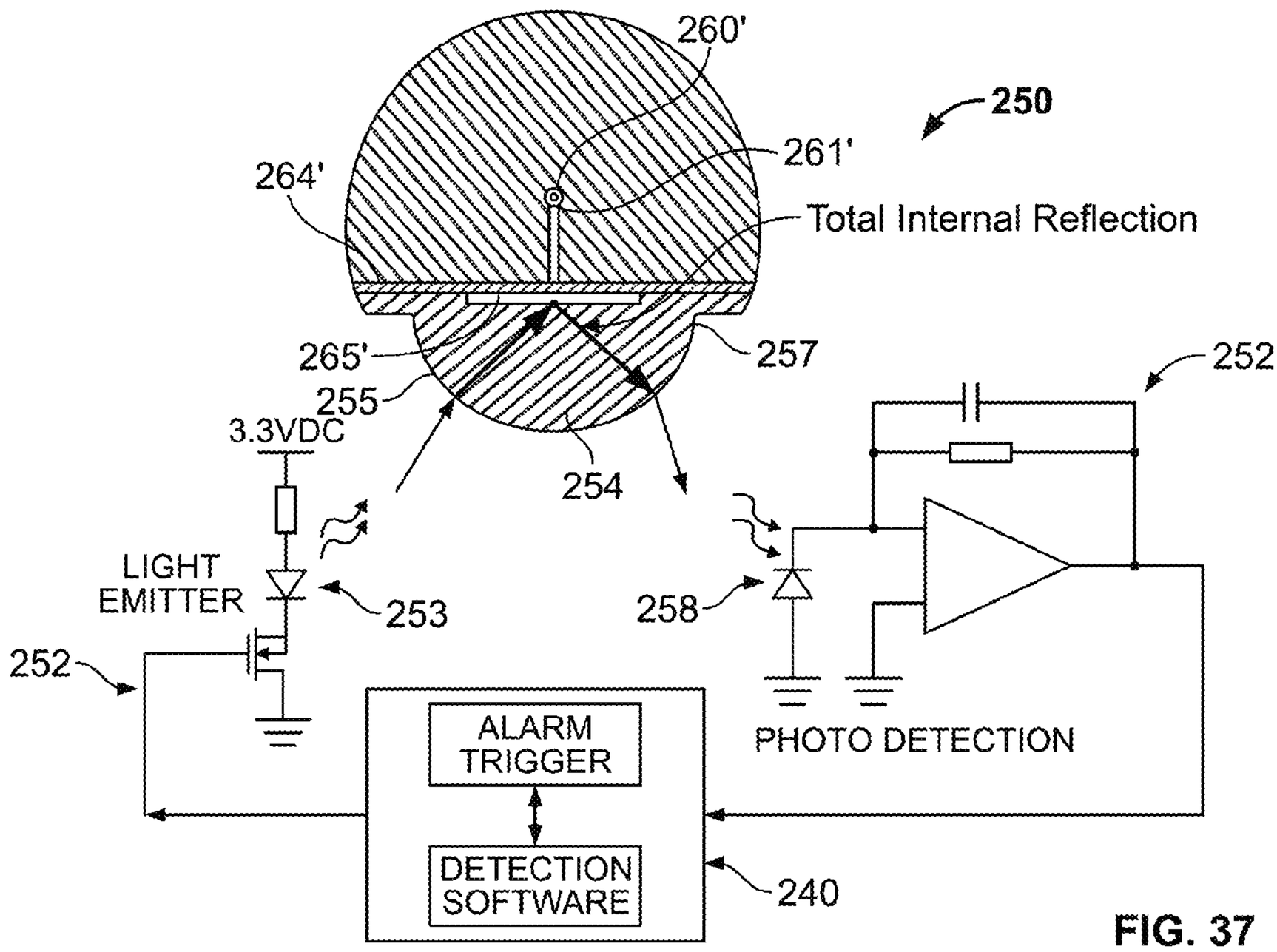
260'
250
261'
264'
Total Internal Reflection
265'
257
252
255
3.3VDC
254
LIGHT
EMITTER
253
258
252
ALARM
TRIGGER
PHOTO DETECTION
DETECTION
SOFTWARE
240

FIG. 37

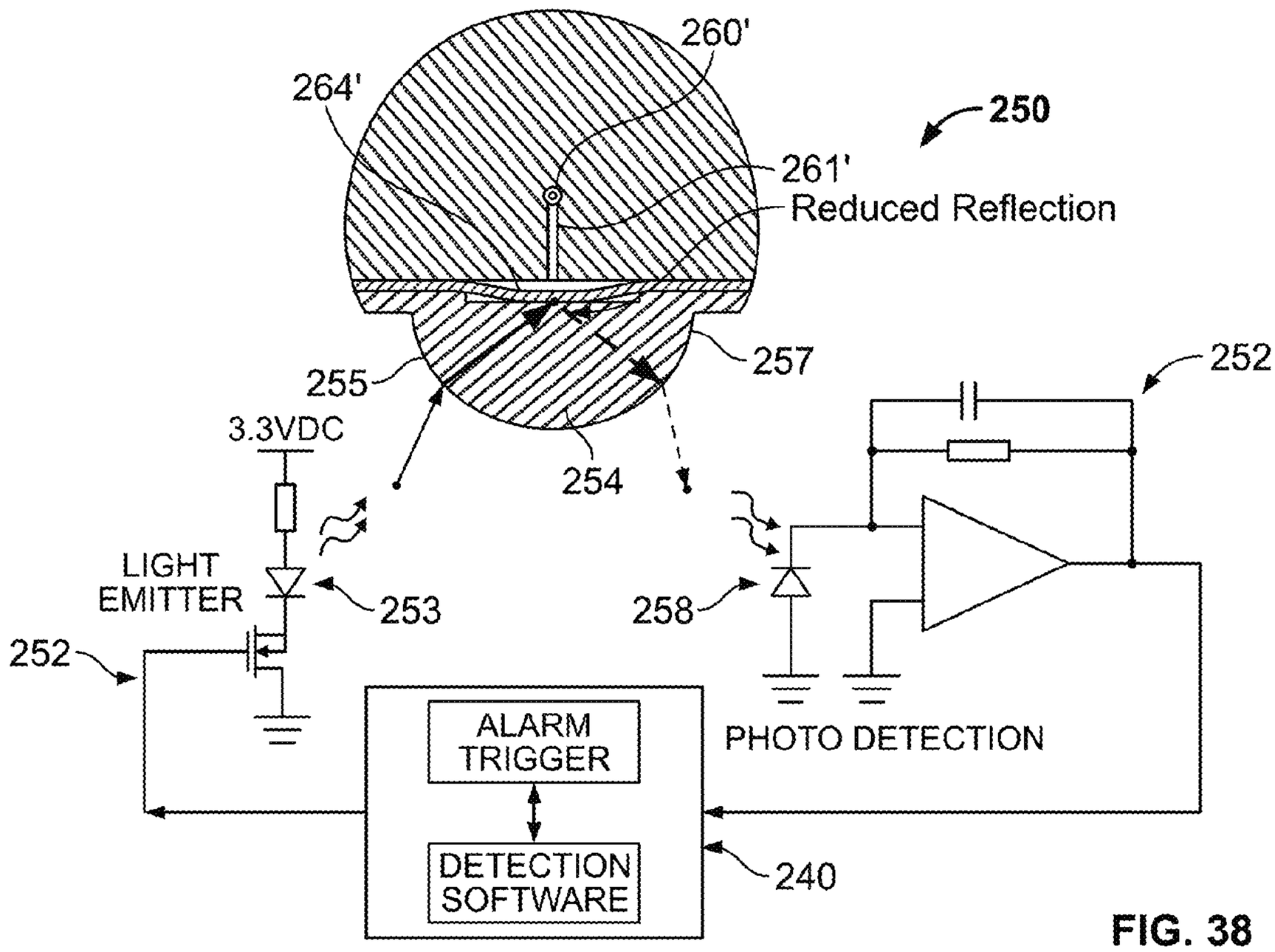
260'
264'
250
261'
Reduced Reflection
257
252
255
3.3VDC
254
LIGHT
EMITTER
253
258
252
ALARM
TRIGGER
PHOTO DETECTION
DETECTION
SOFTWARE
240

FIG. 38

REMOVABLE CONTROLLER FOR AN INFUSION PUMP

CROSS-REFERENCE TO RELATED APPLICATION(S)

This is a continuation of U.S. application Ser. No. 14/135,960 filed on Dec. 20, 2013, which is a continuation of U.S. application Ser. No. 13/160,191 filed on Jun. 14 2011, which is a divisional application of U.S. application Ser. No. 11/751,262 filed on May 21, 2007 and entitled "Removable Controller for an Infusion Pump," the contents of which are fully incorporated herein by reference.

TECHNICAL FIELD

This document relates to components of a portable infusion pump system for controlled dispensation of a medicine or other fluid.

BACKGROUND

Pump devices are commonly used to deliver one or more fluids to a targeted individual. For example, a medical infusion pump device may be used to deliver a medicine to a patient as part of a medical treatment. The medicine that is delivered by the infusion pump device can depend on the condition of the patient and the desired treatment plan. For example, infusion pump devices have been used to deliver insulin to the vasculature of diabetes patients so as to regulate blood-glucose levels.

SUMMARY

Some embodiments of an infusion pump system include a controller device that is configured to removably attach to a pump device in a manner that provides a secure fitting, an overall compact size, and a reliable electrical connection. In particular embodiments, the controller device can be secured to the pump device in a generally side-by-side arrangement. In such circumstances, the pump device and the controller device can be separate components that mate with one another, but the overall size of the assembled system may be reduced because there is no requirement for one device to completely surround or envelope the mating device.

Certain embodiments include a portable infusion pump system to dispense medicine to a user. The infusion pump system may include a disposable and non-reusable pump device. The pump device may include at least a portion of a drive system to dispense medicine from the pump device. The infusion pump system may also include a reusable controller device removably attached to the disposable and non-reusable pump device in a side-by-side arrangement. The controller device may be in electrical communication with the drive system of the pump device. The infusion pump system may further include a release member that is movably mounted to one of the pump device and the controller device. The release member may be adjustable from a locking position in which the controller device and the pump device are retained in a side-by-side arrangement to a second position in which the controller device and the pump device are detachable from one another.

Some embodiments include methods of using an infusion pump system. One method may include inserting a medicine into a pump device. The pump device may define a space that extends in a longitudinal direction to receive the medicine. The method may also include removably attaching the pump device with a controller device so that the pump device is arranged adjacent to the controller device in a fixed relationship. The controller device may be electrically connected to the pump device when in the fixed relationship. The pump device may be removably attached to the controller device by guided movement of the pump device relative to the controller device in the longitudinal direction.

Particular embodiments include a multiple-component infusion pump system. The infusion pump system may include a pump device and a controller device. The pump device may include a drive system to dispense a medicine from the pump device and a pump housing to enclose at least a portion of the drive system. The controller device can be removably attached to the pump device so that the pump device is arranged adjacent to the controller device in a fixed relationship. The controller device may include a user interface having a display device, control circuitry to communicate with the drive system of the pump device, and a controller housing to enclose at least a portion of the control circuitry. The pump housing may be unenclosed by the controller housing when the pump device is arranged adjacent to the controller device in the fixed relationship.

Some or all of the embodiments described herein may provide one or more of the following advantages. First, some embodiments of an infusion pump system include a controller device that is configured to removably attach to a pump device in a manner that provides a secure fitting and an overall compact size. This compact size can enhance the discreteness and portability of the infusion pump system.

Second, in particular embodiments, the infusion pump system can include a reusable controller device that is removably attachable to a disposable single-use pump in a generally side-by-side arrangement. In such circumstances, the size of the assembled system can be reduced because one device does not necessarily surround or envelope the mating device.

Third, at least one of the pump device and the controller device can employ a release member that facilitates an easy-to-use detachment and replacement process. For example, the release member may be an adjustable latch that can be shifted away from the pump device vice) to permit the components to disengage. In such circumstances, the pump device **100** may be a "one time use" component that is discarded after the medicine is dispensed therefrom, and a new pump device (having a new supply of medicine) can thereafter be attached to the reusable controller device.

Fourth, some embodiments of an infusion pump system may include a configuration that resists migration of external contaminants, such as precipitation, water splashes, sweat and the like. This configuration may provide a safe and reliable infusion pump system that can be worn by the user during normal daily activities.

Fifth, some embodiments of the controller device are configured to removably attach to the pump device in a manner that provides a reliable electrical connection therebetween. Such an electrical connection may permit communication from the controller device to the drive system of the pump device.

Sixth, some embodiments of the pump device may be attached to the controller device so that a user can readily monitor infusion pump operation by simply viewing the user interface connected to the pump device. In these circumstances, the user may activate and control the pump device without the requirement of locating and operating a separate monitoring module.

Seventh, some embodiments of the infusion pump system may be configured to be portable, wearable, and (in some

circumstances) concealable. For example, a user can conveniently wear the infusion pump system on the user's skin under clothing or can carry the pump device in the user's pocket (or other portable location) while receiving the medicine dispensed from the pump device.

The details of one or more embodiments of the invention are set forth in the accompanying drawings and the description below. Other features, objects, and advantages of the invention will be apparent from the description and drawings, and from the claims.

DESCRIPTION OF DRAWINGS

FIG. **1** is a perspective view of an infusion pump system in accordance with some embodiments, in accordance with some embodiments.

FIG. **2** is a perspective view of the infusion pump system of FIG. **1** in an assembled state.

FIG. **3** is another perspective view of the infusion pump system of FIG. **2**.

FIG. **4** is a perspective view of the infusion pump system of FIG. **1** in a detached state.

FIG. **5** is another perspective view of the infusion pump system on FIG. **4**.

FIG. **6** is a perspective view of an infusion pump system, in accordance with some embodiments.

FIG. **7** is a perspective view of the infusion pump system of FIG. **6** worn on clothing of a user.

FIG. **8** is a perspective view of an infusion pump system worn on skin of a user, in accordance with particular embodiments.

FIG. **9** is a perspective view on an infusion pump system having an illumination instrument, in accordance with some embodiments.

FIG. **10** is a perspective view of an infusion pump system having an illumination instrument, in accordance with particular embodiments.

FIGS. **11-12** are perspective views of a pump device being detached from a controller device, in accordance with some embodiments.

FIGS. **13-14** are perspective views of the pump device of FIGS. **11-12** being discarded and the controller device of FIGS. **11-12** being reused with a new pump device.

FIGS. **15-16** are perspective views of the new pump device of FIG. **13** being attached to the controller device of FIG. **13**.

FIG. **17** is an exploded perspective view of a controller device for an infusion pump system, in accordance with some embodiments.

FIG. **18** is an exploded perspective view of a pump device for an infusion pump system, in accordance with some embodiments.

FIG. **19** is a perspective view of a portion of the pump device of FIG. **18**.

FIG. **20** is a top view of a portion of the pump device of FIG. **18**.

FIG. **21** is an exploded perspective view of a medicine cartridge and a flexible piston rod, in accordance with some embodiments.

FIGS. **22-25** are perspective views of a portion of a drive system for the pump device of FIG. **18**.

FIG. **26** is a perspective view of occlusion sensor circuitry from a controller device arranged adjacent to a cap of a pump device, in accordance with some embodiments.

FIG. **27** is a cross-sectional view of the cap device of FIG. **26**.

FIGS. **28-29** are cross-sectional views of an occlusion sensor for use in an infusion pump system.

FIGS. **30-31** are cross-sectional views of the occlusion sensor of FIGS. **28-29**.

FIGS. **32-33** are diagrams of the occlusion sensor of FIGS. **30-31**.

FIG. **34** is a cross-sectional view of an alternative embodiment of the cap device of FIG. **26**.

FIGS. **35-36** are cross-sectional views of a portion of a fluid channel through the cap device of FIG. **34**, in accordance with some embodiments.

FIGS. **37-38** are diagrams of an alternative embodiment of an occlusion sensor to be arranged adjacent to the cap device of FIG. **34**.

Like reference symbols in the various drawings indicate like elements.

DETAILED DESCRIPTION OF ILLUSTRATIVE EMBODIMENTS

Referring to FIGS. **1-3**, an infusion pump system **10** can include a pump device **100** and a controller device **200** that communicates with the pump device **100**. The pump device **100** includes a housing structure **110** that defines a cavity **116** in which a fluid cartridge **120** can be received. The pump device **100** also includes a cap device **130** to retain the fluid cartridge **120** in the cavity **116** of the housing structure **110**. The pump device **100** includes a drive system (described in more detail below) that advances a plunger **125** in the fluid cartridge **120** so as to dispense fluid therefrom. The controller device **200** communicates with the pump device **100** to control the operation of the drive system. When the controller device **200**, the pump device **100** (including the cap device **130**), and the fluid cartridge **120** are assembled together, the user can (in some embodiments) conveniently wear the infusion pump system **10** on the user's skin under clothing or in the user's pocket while receiving the fluid dispensed from the pump device **100**.

The controller device **200** may be configured as a reusable component that provides electronics and a user interface to control the operation of the pump device **100**. In such circumstances, the pump device **100** can be a disposable component that is disposed of after a single use. For example, the pump device **100** can be a "one time use" component that is thrown away after the fluid cartridge **120** therein is exhausted. Thereafter, the user can removably attach a new pump device **100** to the reusable controller device **200** for the dispensation of fluid from a new fluid cartridge **120**. Accordingly, the user is permitted to reuse the controller device **200** (which may include complex or valuable electronics) while disposing of the relatively low-cost pump device **100** after each use. Such a pump system **10** can provide enhanced user safety as a new pump device **100** (and drive system therein) is employed with each new fluid cartridge **120**.

Briefly, in use, the pump device **100** is configured to removably attach to the controller device **200** in a manner that provides a secure fitting, an overall compact size, and a reliable electrical connection that is resistant to water migration. For example, as described in more detail below in connection with FIGS. **1-5**, the controller device **200** includes a housing **210** having a number of features that mate with complementary features of the pump housing **110**. In such circumstances, the controller device **200** can removably attach with the pump device **100** in a generally side-by-side configuration while not fully surrounding the pump housing **110**. Accordingly, the pump device **100** and the

controller device **200** can be separate components that fit together, but the overall size of the combined assembly is reduced because there is no requirement for one component (e.g., the controller device) to completely surround or envelop the second component (e.g., the pump device). The compact size permits the infusion pump system **10** to be discrete and portable (as described below in connection with FIGS. **6-8**). Moreover, at least one of the pump device **100** or the controller device **200** may include a release member that facilitates an easy-to-use detachment and replacement process. For example, as described in more detail below in connection with FIGS. **11-16**, an exhausted pump device **100** may be a "one time use" component that is discarded after being used, and a new pump device **100'** (having a new medicine cartridge **120'**) can thereafter be attached to the controller device **200**.

Moreover, the pump device **100** and the controller device **200** can be mounted to one another so that the assembled system **10** is resistant to migration of external contaminants (e.g., water from precipitation or splashing, sweat, and the like) both into the pump housing structure **110** and the controller housing structure **210**. In particular, the infusion pump system **10** may include one or more seals that are arranged to hinder migration of external contaminants into the cavity of the pump device **100** (e.g., to protect the insulin container **120** and the drive system during operation). Also, the infusion pump system may include one or more gaskets arranged proximate to the electrical connection location (between the pump device **100** and the controller device **200**) to protect the electrical connection from migration of external contaminants. Thus, in some embodiments, the infusion pump system **10** can be assembled into a water resistant configuration that protects sensitive components from water migration (e.g., if the user encounters water while wearing the pump system **10**).

In addition or in the alternative, the controller device **200** can be equipped with an illumination instrument **230** that provides the user with an opportunity to illuminate and inspect a targeted location. For example, as described in more detail below in connection with FIGS. **9-10**, the light emitting device **230** can be directed at the infusion site on the user's skin to verify that the infusion set is properly embedded, or the light emitting device **230** can be directed at the pump device **100** to illuminate the cavity **116** or other areas.

Furthermore, in use, the controller device **200** can include a sensor configuration that detects occlusions in the fluid flow path extending to the user. For example, the controller device **200** may include an optical sensor system **250** that detects the amount of light reflected from a portion of the cap device **130**. As described in more detail below in connection with FIGS. **26-38**, the amount of light reflected from the cap device **130** may change if an occlusion occurs to cause an increase in the fluid pressure. For instance, some embodiments of the optical sensor system **250** may operate using the principle of total internal reflection. The optical sensor system **250** may include a number of components that are housed in the controller device **200**. In one example, the light emitter and light sensor may be arranged on a sensor circuit in the controller device **200**, thereby permitting these components to be reused along with the controller device (while the relatively low cost components in the pump device **100** are discarded after the "one time use" of the pump device **100**).

Referring again to FIGS. **1-3**, in this embodiment, the pump system **10** is a medical infusion pump system that is configured to controllably dispense a medicine from the cartridge **120**. As such, the fluid cartridge **120** may contain a medicine **126** (FIG. **1**) to be infused into the tissue or vasculature of a targeted individual, such as a human or animal patient. For example, the pump device **100** can be adapted to receive a medicine cartridge **120** in the form of a carpule that is preloaded with insulin or another medicine for use in the treatment of Diabetes (e.g., Byetta®, Symlin®, or others). Such a cartridge **120** may be supplied, for example, by Eli Lilly and Co. of Indianapolis, Ind. Other examples of medicines contained in the fluid cartridge **120** include: pain relief drugs, hormone therapy, blood pressure treatments, anti-emetics, osteoporosis treatments, or other injectable medicines. The fluid cartridge **120** may have other configurations. For example, the fluid cartridge may comprise a reservoir that is integral with the pump housing structure **110** (e.g., the fluid cartridge can be defined by one or more walls of the pump housing structure **110** that surround a plunger to define a reservoir in which the medicine is injected or otherwise received).

In some embodiments, the pump device **100** may include one or more structures that interfere with the removal of the medicine cartridge **120** after the medicine cartridge **120** is inserted into the cavity **116**. For example, as shown in FIG. **1**, the pump housing structure **110** may include one or more retainer wings **119** that at least partially extend into the cavity **116** to engage a portion of the medicine cartridge **120** when the medicine cartridge **120** is installed therein. In this embodiment, the pump housing structure **110** includes a pair of opposing retainer wings **119** (only one is shown in the view in FIG. **1**) that flex toward the inner surface of the cavity **116** during insertion of the medicine cartridge **120**. After the medicine cartridge is inserted to a particular depth, the retainer wings **119** are biased to flex outward (toward the center of the cavity **116**) so that the retainer wings **119** engage a neck portion **129** of the medicine cartridge **120**. This engagement with the retainer wings **119** and the neck portion **129** hinder any attempts to remove the medicine cartridge **120** away from the pump device **100**.

Such a configuration may facilitate the "one-time-use" feature of the pump device **100**. Because the retainer wings **119** interfere with attempts to remove the medicine cartridge **120** from the pump device **100**, the pump device **100** will be discarded along with the medicine cartridge **120** after the medicine cartridge **120** is emptied, expired, or otherwise exhausted. The retainer wings **119** may serve to hinder attempts to remove the exhausted medicine cartridge **120** and to insert a new medicine cartridge **120** into the previously used pump device **100**. Accordingly, the pump device **100** may operate in a tamper-resistant and safe manner because the pump device **100** can be designed with predetermined life expectancy (e.g., the "one-time-use" feature in which the pump device is discarded after the medicine cartridge **120** is emptied, expired, or otherwise exhausted).

Still referring to FIGS. **1-3**, the cap device **130** can be joined with the pump device **100** after the medicine cartridge is inserted in the cavity **116**. In this embodiment, the cap device **130** is multifunctional in that it performs a number of functions for the pump device operation. For example, attachment of the cap device **130** may cause one or more of the following preparatory functions: forcing the plunger **125** (FIG. **1**) of the fluid cartridge **120** to engage with the piston rod (not shown in FIGS. **1-3**, refer for example to FIG. **19**), piercing a septum **121** of the fluid cartridge **120** to provide a flow path for the fluid (refer for example to FIG. **27**), and priming the fluid cartridge **120** with a "break away" force to initiate movement of the plunger **125** in the fluid cartridge **120**. In addition or in the alternative, attachment of the cap

device **130** may also cause one or more of the following safety related functions: aligning an occlusion sensor **250** with the a portion of the fluid flow path (described in connection with FIGS. **26-38**), sealing the pump housing **110** (e.g., using a polymeric o-ring seal **131** or the like) to resist migration of external contaminants into the cavity **116**, and ceasing or preventing the dispensation of fluid if the cap device **130** is improperly engaged with the pump housing **110**. In other embodiments, the cap device **130** may supplement or replace the previously described retainer wings **119** by locking into position after joining with the pump housing **110**, thereby hindering removal of the fluid cartridge **120** in the pump housing **110**.

The cap device **130** can include one or more alignment tabs **132** that operate to ensure that the cap device **130** is joined with the pump housing **110** in a selected orientation. For example, as shown in FIGS. **2-3**, the cap device **130** may include an output port **139** that connects with tubing (e.g., FIG. **6**) for dispensation of the medicine to the user. The output port **139** may have an angled orientation such that a portion of the tubing extends transversely to the central axis of the cartridge **120** and cap device **130**. The alignment tabs **132** arranged on the body of the cap device **130** can align with adjacent surfaces of the controller housing **210** to provide the selected orientation of the output port during operation. If, for example, the cap device **130** were joined with the pump housing **100** in an orientation that is 180-degrees off from the selected orientation, the alignment tabs **132** would receive interference from the barrel channel **211** of the controller housing **210**. As such, the user would be unable to attach the pump device **100** to the controller **200**, thereby indicating to the user that the cap device **130** must be reoriented to the selected position.

Still referring to FIGS. **1-3**, the controller device **200** may be removably attached to the pump device **100** so that the two components are mechanically mounted to one another in a fixed relationship. Such a mechanical mounting can form an electrical connection between the removable controller device **200** and the pump device **100**. For example, the controller device **200** may be in electrical communication with a portion of a drive system (not shown in FIGS. **1-3**) of the pump device **100**. As described in more detail below, the pump device **100** includes a drive system that causes controlled dispensation of the medicine or other fluid from the cartridge **120**. In some embodiments, the drive system incrementally advances a piston rod (not shown in FIGS. **1-3**) longitudinally into the cartridge **120** so that the fluid is forced out of an output end **122**. A septum **121** (FIG. **1**) at the output end **122** of the fluid cartridge **120** can be pierced to permit fluid outflow when the cap device **130** is connected to the pump housing structure **110** (described in more detail below). Thus, when the pump device **100** and the controller device **200** are attached and thereby electrically connected, the controller device **200** communicates electronic control signals via a hardwire-connection (e.g., electrical contacts or the like) to the drive system or other components of the pump device **100**. In response to the electrical control signals from the controller device **200**, the drive system of the pump device **100** causes medicine to incrementally dispense from the medicine cartridge **120**.

In some embodiments, the controller device is configured to removably attach to the pump device **100** in a side-by-side arrangement. As such, the controller device **200** can be electrically connected with the pump device **100** while the controller device **200** remains outside of the pump housing **110** (and, likewise, the pump device **100** remains outside of the controller housing **210**). Accordingly, the pump device **100** and the controller device **200** can be separate components that fit together, but the overall size of the combined assembly is reduced because there is no requirement for one component (e.g., the controller device) to completely surround or envelop the second component (e.g., the pump device). The compact size permits the infusion pump system **10** to be discrete and portable when the pump device **100** is attached with the controller device **200** (as shown in FIGS. **2-3**). In this embodiment, the controller device **200** includes a controller housing structure **210** having a number of features (e.g., a barrel channel **211**, a rail **212**, a depression **213**, and a guide channel **214***a-b* that is segmented by a release latch **215**) that are configured to mate with complementary features (e.g., a barrel **111**, a slider channel **112**, an mating extension **113**, and a segmented guide rail **114***a-b*) of the pump housing structure **110** so as to form a releasable mechanical connection (as shown, for example, in FIGS. **1** and **4-5**). Such mating features of the pump housing structure **110** and the controller housing structure **210** can provide a secure connection in the previously described side-by-side arrangement. It should be understood that, in other embodiments, other features or connector devices can be used to facilitate the side-by-side mounting arrangement. These other features or connector devices may include, for example, magnetic attachment devices, mating tongues and grooves, or the like.

As shown in FIG. **1**, the pump device **100** may include an electrical connector **118** (e.g., having conductive pads, pins, and the like) that are exposed to the controller device **200** and that mate with a complementary electrical connector (refer to connector **218** in FIG. **4**) on the adjacent face of the controller device **200**. The electrical connectors **118** and **218** provide the electrical communication between the control circuitry (refer, for example, to FIG. **17**) housed in the controller device **200** and at least a portion of the drive system or other components of the pump device **100**. For example, in some embodiments, the electrical connectors **118** and **218** permit the transmission of electrical control signals to the pump device **100** and the reception of feedback signals (e.g., sensor signals) from particular components within the pump device **100**. Furthermore, as described in more detail below, the infusion pump system **10** may include a gasket **140** that provides a seal that is resistant to migration of external contaminants when the pump device **100** is attached to the controller device **200**. Thus, in some embodiments, the infusion pump system **10** can be assembled into a water resistant configuration that protects the electrical interconnection from water migration (e.g., if the user encounters water while carrying the pump system **10**).

Still referring to FIGS. **1-3**, the controller device **200** includes a user interface **220** that permits a user to monitor the operation of the pump device **100**. In some embodiments, the user interface **220** includes a display **222** and one or more user-selectable buttons (e.g., four buttons **224***a*, **224***b*, **224***c*, and **224***d* in this embodiment). The display **222** may include an active area in which numerals, text, symbols, images, or a combination thereof can be displayed (refer, for example, to FIG. **2**). For example, the display **222** may be used to communicate a number of settings or menu options for the infusion pump system **10**. In this embodiment, the user may press one or more of the buttons **224***a*, **224***b*, **224***c*, and **224***d* to shuffle through a number of menus or program screens that show particular settings and data (e.g., review data that shows the medicine dispensing rate, the total amount of medicine dispensed in a given time period, the amount of medicine scheduled to be dispensed at a particular time or date, the approximate amount of medicine remaining

in the cartridge **120**, or the like). In some embodiments, the user can adjust the settings or otherwise program the controller device **200** by pressing one or more buttons **224***a*, **224***b*, **224***c*, and **224***d* of the user interface **220**. For example, in embodiments of the infusion pump system **10** configured to dispense insulin, the user may press one or more of the buttons **224***a*, **224***b*, **224***c*, and **224***d* to change the dispensation rate of insulin or to request that a bolus of insulin be dispensed immediately or at a scheduled, later time. Also, as described below in connection with FIGS. **9-10**, the user can activate the illumination instrument **230** on the controller device **200** by pressing one or more buttons **224***a*, **224***b*, **224***c*, and **224***d* of the user interface **220**.

The display **222** of the user interface **220** may be configured to display quick reference information when no buttons **224***a*, **224***b*, **224***c*, and **224***d* have been pressed. For example, as shown in FIG. **2**, the active area of the display **222** can display the time and the date for a period of time after no button **224***a*, **224***b*, **224***c*, and **224***d* has been actuated (e.g., five seconds, 10 seconds, 30 seconds, 1 minute, 5 minutes, or the like). Thereafter, the display **222** may enter sleep mode in which the active area is blank, thereby conserving battery power. In addition or in the alternative, the active area can display particular device settings, such as the current dispensation rate or the total medicine dispensed, for a period of time after no button **224***a*, **224***b*, **224***c*, or **224***d* has been actuated (e.g., five seconds, 10 seconds, 30 seconds, 1 minute, 5 minutes, or the like). Again, thereafter the display **222** may enter sleep mode to conserve battery power. In certain embodiments, the display **222** can dim after a first period of time in which no button **224***a*, **224***b*, **224***c*, or **224***d* has been actuated (e.g., after 15 seconds or the like), and then the display **22** can enter sleep mode and become blank after a second period of time in which no button **224***a*, **224***b*, **224***c*, or **224***d* has been actuated (e.g., after 30 seconds or the like). Thus, the dimming of the display device **222** can alert a user viewing the display device **222** when the active area **223** of the display device will soon become blank.

Accordingly, when the controller device **200** is connected to the pump device **100**, the user is provided with the opportunity to readily monitor infusion pump operation by simply viewing the user interface **220** of the controller device **200** connected to the pump device **100**. Such monitoring capabilities may provide comfort to a user who may have urgent questions about the current operation of the pump device **100** (e.g., the user may be unable to receive immediate answers if wearing an infusion pump device having no user interface attached thereto).

Also, in these embodiments, there may be no need for the user to carry and operate a separate module to monitor the operation of the infusion pump device **100**, thereby simplifying the monitoring process and reducing the number of devices that must be carried by the user. If a need arises in which the user desires to monitor the operation of the pump device **100** or to adjust settings of the pump system **10** (e.g., to request a bolus amount of medicine), the user can readily operate the user interface **220** of the controller device **200**, which is removably attached to the pump device **100**, without the requirement of locating and operating a separate monitoring module.

In other embodiments, the user interface **200** is not limited to the display and buttons depicted in FIGS. **1-3**. For example, in some embodiments, the user interface **220** may include only one button or may include a greater numbers of buttons, such as two buttons three buttons, four buttons, five buttons, or more. In another example, the user interface **220** of the controller device **200** may include a touch screen so that a user may select buttons defined by the active area of the touch screen display. Alternatively, the user interface **220** may comprise audio inputs or outputs so that a user can monitor the operation of the pump device **100**.

Referring now to FIGS. **4-5**, when the infusion pump system **10** operates, the controller device **200** is removably attached to the pump device **100** in a side-by-side arrangement. For example, the pump device **100** may be moved in a longitudinal direction (e.g., refer to direction **219** in FIG. **15**) toward the controller device **200** until the complementary features connect and secure the separate components in the side-by-side arrangement. In these circumstances, the pump device **100** and the controller device **200** can be separate components that fit together, but the overall size of the combined assembly is reduced because there is no requirement for one component (e.g., the controller device or pump device) to surround or envelop the second component (e.g., the pump device or controller device). Moreover, in some embodiments, the pump device **100** and controller device **200** can be readily attached together with a "one-movement" process that is convenient to the user (described in more detail below).

In this embodiment, the controller device **200** includes a controller housing structure **210** having a number of features that are configured to mate with complementary features of the pump housing structure **110** so as to form a releasable mechanical connection. For example, the pump housing structure **110** may include a barrel **111** that mates with a complementary barrel channel **211** of the controller housing **210**. Also, the pump housing **110** includes slider channel **112** that slidably engages a complementary rail **212** defined by the controller housing **210**. The slider channel **112** can guide the relative motion between the pump device **100** and the controller device **200** in the longitudinal direction during the attachment process. Similarly, the pump housing **110** may include a segmented rail **114***a-b* (FIG. **1**) that mates with a guide channel **214***a-b* to direct the relative longitudinal motion between the pump device **100** and the controller device **200**. As described in more detail below, the segmented rails **114***a-b* may interact with the release member **215** so as to releasably secure the pump device **100** into assembly with the controller device **200**. In addition, the pump housing **110** may include an extension **113** (FIG. **1**) that mates with a depression **213** (FIG. **5**) in the controller housing **210** when the pump device **100** is fully attached to the controller device **200**.

Still referring to FIGS. **4-5**, when the pump device **100** is advanced in the longitudinal direction toward the controller device **200** as guided by the slider channel **112** and the segmented rails **114***a-b*, the electrical connector **118** (FIG. **5**) of the pump device **100** is directed toward engagement with the mating connector **218** (FIG. **4**) of the controller device **200**. As the connectors **118** and **218** join together to form the electrical connection, the release member **215** is shifted to a position between the segmented rails **114***a-b* so as to prevent withdrawal of the connection. Also, when the connectors **118** and **218** are mated, the extension **113** and barrel **111** are mated with the corresponding depression **213** and barrel channel **211** so as to resist relative rotational movement between the pump device **100** and the controller device **200**. In this embodiment, the physical attachment of the electrical connectors **118** and **218** may also serve to resist relative rotational movement between the pump device **100** and the controller device **200**. Furthermore, when the connectors **118** and **218** are mated, the slide channel **112** is mated with the corresponding rail **112** and barrel channel **211** so as to

resist relative side-to-side movement between the pump device **100** and the controller device **200**.

Accordingly, the pump device **100** is configured to removably attach to the controller device **200** in a manner that provides a secure fitting, an overall compact size, and a reliable electrical connection. When the pump device **100** and the controller device **200** are arranged in this side-by-side configuration, the controller device **200** can be electrically connected with the pump device **100** while the controller device **200** remains outside of the pump housing **110** (and, likewise, the pump device **100** remains outside of the controller housing **210**). As such, the overall size of the assembled system **10** can be minimized, thereby providing an infusion pump system **10** having a discrete size and enhanced portability.

Additionally, in some embodiments, the attachment of the pump device **100** to the controller device **200** can be accomplished by a user with a convenient "one-movement" process. For example, as previously described, the user can readily slide the pump device **100** and the controller device **200** toward one another in a single movement (e.g., in the longitudinal direction) that causes both a physical connection and an electrical connection. As described in more detail below in connection with FIGS. **11-16**, the release member **215** may be arranged so as to automatically adjust to a locked position when the pump device **100** is advanced into engagement with the controller device **200**. Thus, the infusion pump system **10** permits users to readily join the pump device **100** and the controller device **200** without compound or otherwise difficult hand movements—a feature that can be beneficial to child users or to elderly users.

It should be understood that, in other embodiments, other features or connector devices can be used to facilitate the side-by-side mounting arrangement. These other features or connector devices may include, for example, magnetic attachment device, mating tongues and grooves, mounting protrusions that friction fit into mating cavities, or the like.

Still referring to FIGS. **4-5**, the pump device **100** and the controller device **200** can be attached in a manner that is resistant to migration of external contaminants (e.g., water, dirt, and the like) both into the pump housing structure **110** and the controller housing structure **210**. For example, when the pump device **100** is advanced in the longitudinal direction toward the controller device **200** (as guided by the slider channel **112** and the segmented rails **114***a-b*), the electrical connector **118** (FIG. **5**) of the pump device **100** is directed toward engagement with the mating connector **218** (FIG. **4**) of the controller device **200**. When the connectors **118** and **218** join together to form the electrical connection, the gasket **140** is compressed between the adjacent surfaces of the pump housing **110** and the controller housing **210**. The gasket **140** thereby forms a water-resistant seal between the ambient environment and the mated connectors **118** and **218**.

The gasket **140** may comprise a polymer foam material that is adhered to a surface of either the pump housing **110** or the controller housing **210** (e.g., adhered to the pump housing **110** in this embodiment). The gasket **140** may be die cut to a selected shape so as to include an aperture for the electrical connection. Thus, in this embodiment, the gasket **140** surrounds the electrical connection when the pump device **100** is secured to the controller device **200**. The configuration provides protection from water migration to one or both of the electrical connectors **118** and **218**. Accordingly, in particular circumstances, the infusion pump system **10** can be assembled into a "water tight" configuration that protects sensitive internal components from water migration in the event that the user encounters water while wearing the pump system **10**. In one example, the gasket **140** may resist migration of water to the electrical connectors **118** and **218** even when the system **10** is submerged underwater (e.g., in a pool, in a bath, or the like) for an extended period of time, such as at least 10 minutes, at least 30 minutes, at least one hour, at least two hours, and preferably at least four hours.

As shown in FIG. **5**, the gasket **140** is arranged to extend generally perpendicular to the assembly motion when the pump device **100** is being attached to the controller device. For example, the pump device **100** can be attached to the controller device **200** by moving the pump device **100** in the longitudinal direction (e.g., refer to direction **219** in FIG. **15**). The gasket **140** includes a major interface surface extends in a generally lateral direction that is perpendicular to the longitudinal assembly motion. Because the gasket **140** extends in a direction (e.g., the lateral direction in this embodiments) that is generally perpendicular to the attachment direction (the longitudinal direction in this embodiment), the gasket **140** can be sufficiently compressed to form a seal when the user performs the "one-movement" process to attach the pump device **100** and the controller device **200**.

In addition, other paths for migration of external contaminants into the assembled pump system **10** may be sealed. For example, the infusion pump system **10** may include one or more seals that are arranged to hinder migration of external contaminants between the cap device **130** and the pump housing **110** into the cavity **116** of the pump device **100**. In this embodiment, the seal **131** arranged between the cap device **130** and the barrel **111** can provide an effective water-resistant seal against water migration into the cavity. As such, the medicine cartridge **120** and pump drive system (not shown in FIGS. **4-5**) can be protected during operation.

Still referring to FIGS. **4-5**, some embodiments of the infusion pump system **10** may employ a power source arranged in pump device **100** or the controller device **200** that draws upon surrounding air for optimum operation. Because the controller device **200** and the pump device **100** may be sealed to resist water migration during normal usage, a water-resistant vent instrument **145** may be used to provide the air to the power source without permitting migration of water therethrough. For example, in this embodiment, the pump device **100** may house a power source **345** in the form of a zinc-air cell battery (refer to FIG. **18**), which draws upon the surrounding air during operation. When the pump device **100** is in use, the pump housing **110** is preferably sealed to protect the internal drive system and medicine cartridge from water migration. As such, the pump housing **110** may include a water-resistant vent instrument **145** disposed proximate to the zinc-air cell battery **345** so that some air may pass through the vent **145** and toward the battery. The water-resistant vent instrument **145** may include one or more layers of a material that is permeable to air and resistant to passage of liquids such as water. For example, the water-resistant vent instrument **145** may include one or more layers of a GORE-TEX material to resist the migration of water into the pump device while permitting the passage of air toward the battery.

Accordingly, the pump device **100** and the controller device **200** can be mounted to one another so that the assembled system **10** is resistant to water migration both into the pump housing structure **110** and the controller housing structure **210**. Such a configuration may also provide water-resistant protection for the electrical connection between the pump device **100** and the controller **200**. Thus, the sensitive internal components in the controller device **200** and the pump device **100** can be reliably protected from water

migration if the user encounters water (e.g., rain, incidental splashing, and the like) while using the pump system **10**.

Referring to FIGS. **6-8**, the infusion pump system **10** may be configured to be portable and can be wearable and concealable. For example, a user can conveniently wear the infusion pump system **10** on the user's skin (e.g., skin adhesive) underneath the user's clothing or carry the pump device **100** in the user's pocket (or other portable location) while receiving the medicine dispensed from the pump device **100**. As described below in connection with FIGS. **18-25**, the drive system of the pump device **100** may be arranged in a compact manner so that the pump device **100** has a reduced length. For example, in the circumstances in which the medicine cartridge **120** has a length of about 6 cm to about 7 cm (about 6.4 cm in one embodiment), the overall length of the pump housing structure **110** (which contains medicine cartridge and the drive system) can be about 7 cm to about 10 cm and about 7 cm to about 9 cm (about 8.3 cm or less in one embodiment). In addition, the pump housing structure **110** may have an overall height of about 2 cm to about 4 cm (about 3.1 cm or less in one embodiment) and an overall thickness of about 8 mm to about 20 mm (about 17.5 mm or less in one embodiment). In such circumstances, the controller device **200** can be figured to mate with the pump housing **110** so that, when removably attached to one another, the components define a portable infusion pump system that stores a relatively large quantity of medicine compared to the overall size of the unit. For example, in this embodiment, the infusion pump system **10** (including the removable controller device **200** attached to the pump device **100** having the cap **130**) may have an overall length of about 7 cm to about 10 cm (about 9.3 cm or less in one embodiment), an overall height of about 2 cm to about 5 cm (about 4.2 cm or less in one embodiment), and an overall thickness of about 8 mm to about 20 mm (about 17.5 mm or less in one embodiment).

The pump system **10** is shown in FIG. **6** as being held in a user's hand **5** so as to illustrate an exemplary size of the system **10** in accordance with some embodiments. This embodiment of the infusion pump system **10** is compact so that the user can wear the portable infusion pump system **10** (e.g., in the user's pocket, connected to a belt clip, adhered to the user's skin, or the like) without the need for carrying and operating a separate module. In such embodiments, the cap device **130** of the pump device **100** may be configured to mate with an infusion set **146**. In general, the infusion set **146** is tubing system that connects the infusion pump system **10** to the tissue or vasculature of the user (e.g., to deliver medicine into the tissue or vasculature under the user's skin). The infusion set **146** may include a flexible tube **147** that extends from the pump device **100** to a subcutaneous cannula **149** retained by a skin adhesive patch **148** that secures the subcutaneous cannula **149** to the infusion site. The skin adhesive patch **148** can retain the infusion cannula **149** in fluid communication with the tissue or vasculature of the patient so that the medicine dispensed through the tube **147** passes through the cannula **149** and into the user's body. The cap device **130** may provide fluid communication between the output end **122** (FIG. **1**) of the medicine cartridge **120** and the tube **147** of the infusion set **146**. For example, the tube **147** may be directly connected to the output port **139** (FIG. **1**) of the cap device **130**. In another example, the infusion set **146** may include a connector (e.g., a Leur connector or the like) attached to the tube **147**, and the connector can then mate with the cap device **130** to provide the fluid communication to the tube **147**. In these examples, the user can carry the portable infusion pump system **10** (e.g., in the user's pocket, connected to a belt clip, adhered to the user's skin, or the like) while the tube **147** extends to the location in which the skin is penetrated for infusion. If the user desires to monitor the operation of the pump device **100** or to adjust the settings of the infusion pump system **10**, the user can readily access the user interface **220** of the controller device **200** without the need for carrying and operating a separate module (refer for example to FIG. **6**).

Referring to FIG. **7**, in some embodiments, the infusion pump system **10** is pocket-sized so that the pump device **100** and controller device **200** can be worn in the user's pocket **6** or in another portion of the user's clothing. For example, the pump device **100** and the controller device **200** can be attached together and form the system that comfortably fits into a user's pocket **6**. The user can carry the portable infusion pump system **10** and use the tube **147** of the infusion set **146** extends to direct the dispensed medicine to the desired infusion site. In some circumstances, the user may desire to wear the pump system **10** in a more discrete manner. Accordingly, the user may pass the tube **147** from the pocket **6**, under the user's clothing, and to the infusion site where the adhesive patch **148** is positioned. As such, the pump system **10** can be used to delivery medicine to the tissues or vasculature of the user in a portable, concealable, and discrete manner.

Referring to FIG. **8**, in other embodiments, the infusion pump system **10** may be configured to adhere to the user's skin **7** directly at the location in which the skin is penetrated for medicine infusion. For example, a rear surface **102** (FIG. **3**) of the pump device **100** may include a skin adhesive patch so that the pump device **100** is physically adhered to the skin of the user at a particular location. In these embodiments, the cap device **130** may have a configuration in which medicine passes directly from the cap device **130** into an infusion cannula **149** that is penetrated into the user's skin. In one example, the fluid output port **139** through the cap device **130** can include a curve or a 90° corner so that the medicine flow path extends longitudinally out of the medicine cartridge and thereafter laterally toward the patient's skin **7**. Again, if the user desires to monitor the operation of the pump device **100** or to adjust the settings of the infusion pump system **10**, the user can readily access the user interface **220** of the controller device **200** without the need for carrying and operating a second, separate device. For example, the user may look toward the pump device **100** to view the user interface **220** of the controller device **200** that is removably attached thereto. In another example, the user can temporarily detach the controller device **200** (while the pump device **100** remains adhered to the skin **7**) so as to view and interact with the user interface **220**.

Referring now to FIGS. **9-10**, the infusion pump system **10** can include an illumination instrument **230** that provides the user with an opportunity to illuminate and inspect a targeted location. The illumination instrument **230** can be useful in situations where the ambient lighting is insufficient for the user's inspection needs (e.g., during the night, during presentation or movie in which the lighting is low, or the like). The illumination instrument **230** can be arranged on the pump device **100**, the controller device **200**, or both. In this embodiment, the illumination instrument is arranged on the controller device **200**. In such circumstances, the illumination instrument **230** can be directed at the infusion site on the user's skin **8** to verify that the infusion set cannula **149** is properly embedded (refer, for example, to FIG. **9**). In another example, the illumination instrument **230** can be directed at the pump device **100** to illuminate some portion

of the pump device **100**, such as the cavity **116** in which the medicine cartridge **120** is received (refer to FIG. **10**).

During the operation of the infusion pump system **10**, the user may be instructed to periodically assess the condition of the connection of the infusion set **146** into the user's body. This assessment can include visually inspecting the adhesive pad **148** that secures the set to the body and the cannula **149** that passes through the skin **8** to provide access for the medicine to enter the tissue or vasculature. In some cases, this inspection reveals that a new infusion set **146** is needed, and the user can thereafter change the infusion set **146** by attaching a new infusion set **146** to the user's skin **8** and the to the pump device **100**. Changing the infusion set **146** can be a detailed process that requires the user to visualize the infusion site along the skin **8** as well as the tip of the infusion cannula **149** prior to insertion (e.g., to verify proper priming or filling of the infusion set tubing **147**).

Also during operation of the infusion pump system **10**, the user may encounter a need to visually inspect one or more or components of the pump device **100**. For example, the user may visually inspect the medicine cartridge **120** in the cavity **116** of the pump housing **110** to verify the fluid level in the medicine cartridge **120**. Although the controller device **200** can include sensors and software to track medicine usage and provide an estimate of the remaining fluid volume, visual confirmation of the fluid level can be comforting to many users. If the visual inspection of the cavity **116** reveals that the medicine cartridge **120** has a low fluid level or is broken, the user can employ a new pump device **100'** and a new medicine cartridge **120'** as described below in connection with FIGS. **11-16**.

As shown in FIGS. **9-10**, the infusion pump system **10** can be equipped with the illumination instrument **230** to conveniently aid in visual inspection processes. For example, visual inspection and possible change of the infusion set **146** may be required in less than optimal conditions, including low-light conditions. Likewise, visual inspection of the pump housing cavity **116** (and the medicine cartridge **120** therein) may be required in low-light conditions. The user interface **220** of the controller device **200** can include an illuminated display screen **222** to facilitate the user's view of the display screen **22**, but the illumination instrument **230** provides a dedicated light source for illuminating targeted sites external to the controller device **200** (e.g., the skin **8**, the infusion set **146**, or the like).

The illumination instrument **230** can include one or more user triggered light sources that are positioned to direct illumination at targeted objects outside of the pump system **10** or at components of the pump device **100**. In the embodiments depicted in FIGS. **9-10**, the light source is arranged on the controller device **200**. Such an arrangement provides close proximity to the control circuitry **240** housed in the controller device **200**. In other embodiments, could be arranged on the pump device **100** or on both the controller device **200** and the pump device **100**.

Still referring to FIGS. **9-10**, the illumination instrument **230** may include a light source in the form of an LED device **232** (FIG. **17**) that is electrically connected to the control circuitry **240** (FIG. **17**) in the controller housing **210**. The light transmitted from the LED device **232** may be directed through a light guide **234** (FIGS. **17** and **26**) extending to the controller housing **210** so that the light exits the light guide **234** and illuminates the targeted object. In some circumstances, the light guide **234** may operate as a light transmissive cover that permits light to pass out of the controller device **200** while sealing out water or other contaminants. Such a construction, for example, may provide an illumination instrument **230** that emits an inspection light even when submerged underwater for a particular period of time. As shown in FIGS. **9-10**, the light from the illumination instrument **230** can be emitted from a side of the controller device **200** that is different from the side on which the user interface **220** is exposed. In this example, the light from the illumination instrument **230** exits from the light guide **234** toward a targeted site while the display **222** and buttons **224***a-d* face a different direction. Thus, the illumination instrument **230** can direct an inspection light toward a targeted site while the user interface **220** remains in a viewable position for the user.

In this embodiment, the illumination instrument **230** emits a beam of light (e.g., a generally cylindrical or conical beam) that provides an intensity sufficient for visually inspecting external sites. For example, the light transmitted from the LED device **232** may be directed through a plastic light guide **234** to provide a beam of light having an illumination intensity that is sufficient to noticeably illuminate a specific area (e.g., a circular area having a diameter of about 10 inches) around a targeted site from more than six inches away, from more that twelve inches away, and preferably from more than eighteen inches away.

The user may, for example, actuate one or more buttons **224***a-d* of the user interface **220** to activate the illumination instrument **230**. For example, the illumination instrument **230** may be configured to activate and transmit light when the user presses a single button (e.g., activate immediately when the single button is pressed or after the single button is pressed-and-held for a short period of time such as two seconds). The illumination device **230** may remain activated while the selected button was held down, and would thereafter shut off when the button is no longer pressed. This press-and-hold activation sequence can conserve battery power as the light is emitted only as long as the user holds the button. In another example, the illumination instrument **230** may be configured to activate and transmit light when the user presses a specified button sequence. The light would be emitted from the illumination instrument **230** while the user would have both hands available for the inspection process. To deactivate the illumination instrument **230** in this embodiment, the user may press another button sequence.

In other embodiments, the illumination instrument **230** can operate in conjunction with a timer that automatically deactivates the light source after a predetermined period of time. The duration of the timer could either be preset at the factory or adjustable by the user (e.g., by selecting the particular menu settings with the user interface **220**). For example, the control circuitry **240** (FIG. **17**) may operate to automatically shut off the illumination instrument **230** after a predetermined period of time, such as 5 seconds, 10 seconds, 20 seconds, 30 seconds, or the like. Such a timer feature can reduce the required user input effort and can conserve battery power.

In some circumstances, the illumination instrument **230** may serve as an indicator to the user that a particular condition exists. For example, the illumination instrument **230** may be automatically activated by the controller device **200** to serve as an alarm that an error has occurred (e.g., a controller error, a drive system error, a flow path error, or the like). In these circumstances, the illumination instrument **230** may emit light in a steady state or in a pulsing state to notify the user of the detected error.

In addition, the illumination instrument **230** may be automatically activated by the controller device during particular user interface activities. For example, when the user

indicates that a new infusion set **146** is attached and should be "primed" to remove air gaps in the tubing **147**, the controller device **200** can automatically activate the illumination instrument **230**. Such automatic activation may be useful for the user in that the illumination device **230** can be readily directed to inspect the infusion set **146** without having to press a separate sequence of buttons to activate the light source.

In some embodiments, the controller device may include features that limit when the illumination instrument can be activated. For example, the controller device **200** may include an ambient light sensor **226** (FIGS. **9-10**) to detect the light level available to the user. If the ambient light level is higher than a particular threshold (e.g., if the user is located in a lighted room or in daylight conditions), the illumination instrument **230** would not be automatically activated as previously described. As such, the battery power can be conserved by reducing the unnecessary illumination effects. In addition, the ambient light sensor **226** may be used by the controller device **200** to conserve battery power in other ways. For example, the lighting for display device **222** of the user interface **220** can be automatically adjusted based on the lighting condition detected by the ambient light sensor **226**. The backlight for the display device **222** may be automatically reduced by the controller device **200** if the user is located in high-level lighting conditions (e.g., in a lighted room or in daylight conditions). Also, the backlight for the display device **222** may be automatically increased by the controller device **200** if the user is located in low-level lighting conditions.

In another embodiment, the activation of the illumination instrument **230** may be limited by the controller device **200** for reasons other than ambient lighting conditions. For example, the illumination instrument **230** may be limited if the controller device **200** detects that the remaining capacity of the power source reaches below a threshold level. In such circumstances, the battery power can be automatically reserved for use in operating the drive system to deliver medicine to the user. Alternatively, the illumination instrument **230** may be limited by the controller device **200** based on a power use profile. The power use profile can provide an estimate of remaining battery life based on the user's activity with the infusion pump system **10** (e.g., activations of the drive system to provide basal and bolus dispensations, historical interaction with the user interface **220**, history of activating the illumination tool, and the like). Using this power use profile, the controller device **200** can estimate how long the remaining battery power will last in order to dispense the medicine remaining in the cartridge **120**. If the power use profile indicates that the remaining battery power may be insufficient, particular features such as the illumination tool **230** may be limited or shut off in order to conserve the remaining battery power for activating drive system and indicating alarms. In another example, the controller device **200** may limit the number of uses of the illumination instrument **230** to a preset number of activations per day or per attachment of a new pump device **100**. Again, providing a limit on the number of activations can conserve the battery power for other operations such as alarm indications and the drive system.

Referring now to FIGS. **11-16**, the infusion pump system **10** can be operated such that the pump device **100** is a disposable, non-reusable component while the controller device **200** is a reusable component. In these circumstances, the pump device **100** may be configured as a "one-time-use" device that is discarded after the medicine cartridge is emptied, expired, or otherwise exhausted. Thus, in some embodiments, the pump device **100** may be designed to have an expected operational life of about 1 day to about 30 days, about 1 day to about 20 days, about 1 to about 14 days, or about 1 day to about 7 days—depending on the volume of medicine in the cartridge **120**, the dispensation patterns that are selected for the individual user, and other factors. For example, in some embodiments, the medicine cartridge **120** containing insulin may have an expected usage life about 7 days after the cartridge is removed from a refrigerated state and the septum **121** is punctured. In some circumstances, the dispensation pattern selected by the user can cause the insulin to be emptied from the medicine cartridge **120** before the 7-day period. If the insulin is not emptied from the medicine cartridge **120** after the 7-day period, the remaining insulin may become expired sometime thereafter. In either case, the pump device **100** and the medicine cartridge **120** therein can be discarded after exhaustion of the medicine cartridge **120** (e.g., after being emptied, expired, or otherwise not available for use).

The controller device **200**, however, may be reused with subsequent new pump devices **100'** and new medicine cartridges **120'**. As such, the control circuitry, the user interface components, and other components that may have relatively higher manufacturing costs can be reused over a longer period of time. For example, in some embodiments, the controller device **200** may be designed to have an expected operational life of about 1 year to about 7 years, about 2 years to about 6 years, or about 3 years to about 5 years—depending on a number of factors including the usage conditions for the individual user. Accordingly, the user is permitted to reuse the controller device **200** (which may include complex or valuable electronics) while disposing of the relatively low-cost pump device **100** after each use. Such a pump system **10** can provide enhanced user safety as a new pump device **100'** (and drive system therein) is employed with each new fluid cartridge **120**.

Referring to FIGS. **11-12**, the pump device **100** can be readily removed from the controller device **200** when the medicine cartridge **120** is exhausted. As previously described, the medicine cartridge **120** is inserted into the cavity **116** (FIG. **1**) of the pump housing **110** where it is retained by the cap device **130**. In some embodiments, a portion of the pump housing **110** can comprise a transparent or translucent material so that at least a portion of the medicine cartridge **120** is viewable therethrough. For example, the user may want to visually inspect the medicine cartridge when the plunger **125** is approaching the output end **122** of the medicine cartridge, thereby providing a visual indication that the medicine cartridge may be emptied in the near future. In this embodiment, the barrel **111** of the pump housing **110** comprises a generally transparent polymer material so that the user can view the medicine cartridge **120** to determine if the plunger **125** is nearing the end of its travel length. Optionally, some embodiments of the pump device **100** may include a label **117*a*** that is adhered around the barrel **111**. The label **117*a*** may provide a convenient location for basic user instructions, product identification information, and other information related to the infusion pump system **10**. To provide enhanced viewability of the medicine cartridge **120** through the label **117*a***, the label **117*a*** may include a window **117*b*** through which the user may visually inspect if the plunger **125** is nearing the end of its travel length.

As shown in FIG. **11**, the pump device **100** has been used to a point at which the medicine cartridge **120** is exhausted. The plunger **125** has been advanced, toward the left in FIG. **11**, over a period of time so that all or most of the medicine

has been dispensed from the cartridge **120**. In some embodiments, the controller device **200** may provide a visual or audible alert when this occurs so as to remind the user that a new medicine cartridge is needed. In addition or in the alternative, the user may visually inspect the medicine cartridge **120** through the barrel **111** of the pump housing **110** (and through the window **117***b* of the label **117***a* in this embodiment) to determine if the medicine cartridge **120** is almost empty. When the user determines that a new medicine cartridge **120** should be employed, the pump device **100** can be readily separated from the controller device **200** by actuating the release member **215**. In this embodiment, the release member **215** is a latch on the controller device **200** that is biased toward a locking position to engage the pump device **100**. The latch may be arranged to engage one or more features on a lateral side of the pump housing **110**. As such, the user may actuate the release member **215** by moving the release member **215** in a lateral direction **216** (FIG. **11**) away from the pump device **100** (e.g., by applying a force with the user's finger).

As shown in FIG. **12**, when the release member **215** is actuated and moved to a position away from the pump device **100**, the segmented guide rail **114***a-b* is free to slide longitudinally in the guide channel **214***a-b* without interference from the release member **215**. Accordingly, the user can move the pump device **100** in a longitudinal direction **217** away from the controller device **200**. For example, the segmented guide rail **114***a-b* may slide along the guide channel **214***a-b*, the extension **113** (FIG. **1**) may be withdrawn from the mating depression **213** (FIG. **12**), and the electrical connector **118** can be separated from the mating connector **218**. In these circumstances, the pump device **100** is physically and electrically disconnected from the controller device **200** while the pump device retains the exhausted medicine cartridge **120**.

In some embodiments, the gasket **140** compressed between the pump device **100** and the controller device **200** may comprise a resilient material. In such circumstances, the gasket **140** can provide a spring-action that urges the pump device **100** to shift a small amount away from the controller device **200** when the release member **215** is moved to the unlocked position (e.g., move in the lateral direction **216** in the embodiment shown in FIG. **11**). Accordingly, in some embodiments, the pump device **100** can automatically and sharply move a small distance (e.g., about 0.5 mm to about 5 mm) away from the controller **200** when the release member **215** is moved to the unlocked position. Such an automatic separation provides a convenient start for the user to detach the pump device **100** away from the controller device **200**. Furthermore, this automatic separation caused by the spring-action of the gasket **140** can provide a swift disconnect between the electrical connectors **118** and **218** when the pump device **100** is being replaced.

Referring to FIGS. **13-14**, the same controller device **200** can be reused with a new pump device **100'** having a new medicine cartridge **120'** retained therein, and the previously used pump device **100** can be discarded with the exhausted medicine cartridge **120**. The new pump device **100'** (FIG. **13**) can have a similar appearance, form factor, and operation as the previously used pump device **100** (FIGS. **11-12** and **14**), and thus the new pump device **100'** can be readily attached to the controller device **200** for controlled dispensation of medicine from the new medicine cartridge **120'**. In some embodiments, the user may prepare the new pump device **100** for use with the controller device **200**. For example, the user may insert the new medicine cartridge **120'** in the cavity **116** of the new pump device **100'** and then join the cap device **130** to the pump housing to retain the new medicine cartridge **120'** therein (refer, for example, to FIG. **1**). Although the tubing **147** of the infusion set **146** is not shown in FIG. **13**, it should be understood that the tubing **147** may be attached to the cap device **130** prior to the cap device **130** being joined with the housing **110**. For example, a new infusion set **146** can be connected to the cap device **130** so that the tubing **147** can be primed (e.g., a selected function of the pump device **100** controlled by the controller **200**) before attaching the infusion set patch to the user's skin. As shown in FIG. **13**, the new medicine cartridge **120'** may be filled with medicine such that the plunger **125** is not viewable through the barrel **111**.

As shown in FIG. **14**, the previously used pump device **100** that was separated from the controller device (as described in connection with FIGS. **11-12**) may be discarded after a single use. In these circumstances, the pump device **100** may be configured as a disposable "one-time-use" device that is discarded by the user after the medicine cartridge **120** is emptied, is expired, has ended its useful life, or is otherwise exhausted. For example, the pump device **100** may be discarded into a bin **20**, which may include a trash bin or a bin specifically designated for discarded medical products. Thus, the user is permitted to dispose of the relatively low-cost pump device **100** after each use while reusing the controller device **200** (which may include complex or valuable electronics) with subsequent new pumps **100'**. Also, in some circumstances, the infusion set **146** (not shown in FIG. **14**, refer to FIG. **8**) that was used with the pump device **100** may be removed from the user and discarded into the bin **20** along with the pump device **100**. Alternatively, the infusion set **146** can be disconnected from the previous pump device **100** and attached to the new pump device **100'**. In these circumstances, the user may detach the infusion set cannula and patch from the skin so as to "re-prime" the tubing with medicine from the new pump device **100'** to remove air pockets from the tubing. Thereafter, the infusion set cannula and patch can be again secured to the user's skin.

Referring to FIGS. **15-16**, the new pump device **100'** can be removably attached to the controller device **200** to assemble into the infusion pump system **10** for delivery of medicine to the user. Before the pump device **100** is electrically connected with the controller device **200**, the user may prepare the new pump device **100'** for use by pulling the removable tab **141** away from the pump housing **110**. In this embodiment, the new pump device **100'** includes the removable tab **141** to seal the battery in the unused pump device **100'** and thereby maintain the battery in a storage mode (refer, for example, to FIG. **14** in which the removable tab **141** is arranged to cover an internal face of the vent **115**). As described in more detail below, when the new pump device **100'** is prepared for usage, the removable tab **141** can be pulled away from the pump housing **110** (and away from the battery therein), which switches the battery into an activation mode. Thus, the shelf-life of the pump device **100'** (prior to usage with the controller device **200**) may be extended by sealing the battery in a storage mode because little, if any, energy is dissipated from the battery when in the storage mode.

The new pump device **100'** can be connected to the controller device **200** by advancing the new pump device **100'** in a longitudinal direction **219** (FIG. **15**) toward the controller device **200**. When the pump device **100'** is advanced in the longitudinal direction **219** toward the controller device **200**, the movement is guided by the slider channel **112** (FIGS. **4-5**) and the segmented rails **114***a-b*. In

particular, the slider channel **112** of the pump housing engages the rail **212** of the controller housing **210**. Also, the front portion of the segmented rail **114***a* slides into the rear portion of the guide channel **214***b*. In this embodiment, the front portion of the segmented rail **114***a* includes a ramp surface **114***c* (refer also to FIG. **1**) that engages a complementary ramp surface **215***c* (FIG. **4**) of the release member **215** to thereby force the release member **215** away from the guide channel **214***a-b* during advancement of the pump device **100'**. The release member **215** is temporarily forced away from the guide channel **214***a-b* so that the front portion of the segmented rail **114***a* passes over the release member **215**, which enables the electrical connector **118** of the pump device **100'** to engage with the mating connector **218** of the controller device **200**. As the connectors **118** and **218** join together to form the electrical connection, the release member **215** biased to return to its latched position and is shifted to a position in the guide channel **214***a-b* between the segmented rails **114***a-b* so as to prevent withdrawal of the pump device **100'**.

Also, when the connectors **118** and **218** are mated, the extension **113** (FIG. **1**) and barrel **111** are mated with the corresponding depression **213** and barrel channel **211** so as to resist relative rotational movement between the pump device **100** and the controller device **200**. In this embodiment, the physical attachment of electrical connectors **118** and **218** may also serve to resist relative rotational movement between the pump device **100** and the controller device **200**. Furthermore, when the connectors **118** and **218** are mated, the slide channel **112** is mated with the corresponding rail **112** (FIG. **1**) and barrel channel **211** so as to resist relative side-to-side movement between the pump device **100** and the controller device **200**.

As previously described, the guided motion in the longitudinal direction **219** provides the user with a convenient "one-movement" process to attach the pump device **100'** and the controller device **200**. For example, the user can readily slide the pump device **100'** and the controller device **200** toward one another in a single movement (e.g., in the longitudinal direction) that causes both a physical connection and an electrical connection. Thus, the infusion pump system **10** permits users to readily join the pump device **100'** and the controller device **200** without compound or otherwise difficult hand movements—a feature that can be beneficial to child users or to elderly users.

As shown in FIG. **16**, when the new pump device **100'** is fully advanced and attached to the controller device **200**, the gasket **140** is compressed between the opposing surfaces of the pump housing **110** and the controller housing **210**. Such a configuration provides a water-resistance seal around the electrical connection that protects the sensitive internal components of the pump device **100'** and the controller device **200** from damage or malfunction. Although the tubing **147** of the infusion set **146** is not shown in FIGS. **15-16**, it should be understood that the tubing **147** may be attached to the cap device **130** to provide a fluid path from the new pump device **100'** to the user.

Accordingly, the new pump device **100'** can removably attach to the controller device **200** in a manner that provides a secure fitting, an overall compact size, and a reliable electrical connection. When the pump device **100'** and the controller device **200** are arranged in this side-by-side configuration, the controller device **200** can be electrically connected with the pump device **100'** while the controller device **200** remains outside of the pump housing **110** (and, likewise, the pump device **100** remains outside of the controller housing **210**). As such, the overall size of the assembly system **10** can be minimized, thereby providing an infusion pump system having a discrete size and enhanced portability.

Referring now to FIG. **17**, the controller device **200** (shown in an exploded view) houses a number of components that can be reused with a series of successive pump devices **100**. In particular, the controller device **200** includes control circuitry **240** arranged in the controller housing **210** that is configured to communicate control signals to the drive system of the pump device **100**. In this embodiment, the control circuitry **240** includes a main processor board **242** that is in communication with a power supply board **244**. The control circuitry **240** includes at least one processor **243** that coordinates the electrical communication to and from the controller device **200** (e.g., communication between the controller device **200** and the pump device **100**). The processor **243** can be arranged on the main processor board **242** along with a number of other electrical components such as memory devices. It should be understood that, although the main processor board **242** is depicted as a printed circuit board, the main processor board can have other forms, including multiple boards, a flexible circuit substrate, and other configurations that permit the processor **243** to operate. The control circuitry **240** can be programmable in that the user may provide one or more instructions to adjust a number of settings for the operation of the infusion pump system **10**. Such settings may be stored in the memory devices arranged in the control circuitry **240**. Furthermore, the control circuitry **240** may include one or more dedicated memory devices that store executable software instructions for the processor **243**. The control circuitry **240** may include other components, such as sensors, that are electrically connected to the main processor board **242**. For example, at least a portion of the occlusion sensor **250** (not shown in FIG. **17**) can be electrically connected to the main processor board **242** via a flexible circuit substrate or one or more wires, as described in more detail below in connection with FIG. **26**.

As previously described, the controller device **200** can be electrically connected with the pump device **100** via mating connectors **118** and **218** (FIGS. **4-5**) so that the control circuitry **240** can communicate control signals to the pump device **100** and receive feedback signals from components housed in the pump device **100**. In this embodiment, the electrical connector **118** (FIG. **5**) on the pump device **100** is a z-axis connector, and the connector **218** (FIG. **4**) on the controller device **200** is adapted to mate therewith. The electrical connector **218** on the controller device **200** is in communication with the control circuitry **240**. As such, the processor **243** can operate according to software instructions stored in the memory device so as to send control signals to the pump device **100** via the connector **218**.

Also as previously described, the controller device **200** can include the illumination instrument **230** that may be operated by the controller circuitry **240**. For example, the illumination instrument **230** can include an LED device **232** that is electrically activated by the control circuitry **240** according to the user's input or according to the previously described automated conditions. The light emitted from the LED device **232** can be transmitted through a light guide **234** arranged on the external face of the controller housing **210**. It should be understood that, in other embodiments, the illumination instrument **230** may include other light source configurations.

Still referring to FIG. **17**, the user interface **220** of the controller device **200** can include input components, output components, or both that are electrically connected to the

control circuitry **240**. For example, in this embodiment, the user interface **220** includes a display device **222** having an active area that outputs information to a user and four buttons **224***a-d* that receive input from the user. Here, the display **222** may be used to communicate a number of settings or menu options for the infusion pump system **10**. In this embodiment, the control circuitry **240** may receive the input commands from the user's button selections and thereby cause the display device **222** to output a number of menus or program screens that show particular settings and data (e.g., review data that shows the medicine dispensing rate, the total amount of medicine dispensed in a given time period, the amount of medicine scheduled to be dispensed at a particular time or date, the approximate amount of medicine remaining the cartridge **120**, or the like). As previously described, the controller circuit **240** can be programmable in that the input commands from the button selections can cause the controller circuit **240** to change any one of a number of settings for the infusion pump system **100**.

Some embodiments of the control circuitry **240** may include a cable connector (e.g., a USB connection port or another data cable port) that is accessible on an external portion of the controller housing **210**. As such, a cable may be connected to the control circuitry **240** to upload data or program settings to the controller circuit or to download data from the control circuitry **240**. For example, historical data of medicine delivery can be downloaded from the control circuitry **240** (via the cable connector) to a computer system of a physician or a user for purposes of analysis and program adjustments. Optionally, the data cable may also provide recharging power.

Still referring to FIG. **17**, the control circuitry **240** of the controller device **200** may include a second power source **245** that can receive electrical energy from a first power source **345** (FIG. **18**) housed in the pump device **100**. In this embodiment, the second power source **245** is coupled to the power supply board **244** of the control circuitry **240**. The hard-wired transmission of the electrical energy can occur through the previously described connectors **118** and **218** (FIGS. **4-5**). In such circumstances, the first power source **345** (FIG. **18**) may include a high density battery that is capable of providing a relatively large amount of electrical energy for its package size, while the second power source **245** (FIG. **17**) may include a high current-output battery that is capable discharging a brief current burst to power the drive system **105** of the pump device **100**. Accordingly, the first battery **345** disposed in the pump device **100** can be used to deliver electrical energy over time (e.g., "trickle charge") to the second battery **245** when the controller device **200** is removably attached to the pump device **100**. For example, as previously described, the first battery **345** may comprise a zinc-air cell battery. The zinc-air cell battery **345** may have a large volumetric energy density compared to some other battery types. For example, the zinc-air cell battery **345** may have a volumetric energy density of greater than about 900 Watt-hours/Liter (Wh/L), about 1000 Wh/L to about 1700 Wh/L, and about 1200 Wh/L to about 1600 Wh/L. Also, the zinc-air cell battery may have a long storage life, especially in those embodiments in which the battery is sealed (e.g., by the removable tab **141** or the like) during storage and before activation. One exemplary zinc-air cell battery provides a potential voltage of about 1.1V to about 1.6V (about 1.2V to about 1.4 V, and about 1.3 V in one embodiment), a current output of about 8 mA to about 12 mA (about 10 mA in one embodiment), and a storage capacity of greater than about 600 mA·h (about 650 mA·h in one embodiment).

As shown in FIG. **17**, the second battery **245** may include a high current-output device that is housed inside the controller housing **210**. The second battery **245** can be charged over a period of time by the first battery **345** and then intermittently deliver high-current bursts to the drive system **105** over a brief moment of time. For example, the second battery **245** may comprise a lithium-polymer battery. The lithium polymer battery disposed in the controller device **200** may have an initial current output that is greater than the zinc-air cell battery disposed in the pump device **100**, but zinc-air cell battery may have an energy density that is greater than the lithium polymer battery (e.g., the lithium polymer battery disposed in the controller device **200** may have a volumetric energy density of less than about 600 Wh/L). In addition, the lithium-polymer battery **245** is readily rechargeable, which permits the zinc-air battery **345** disposed in the pump device **100** to provide electrical energy to the lithium-polymer battery **245** for purposes of recharging. One exemplary lithium-polymer battery provides a initial current output of about greater than 80 mA (about 90 mA to about 110 mA, and about 100 mA in one embodiment) and a maximum potential voltage of about 4.0V to and 4.4V (about 4.2 V in one embodiment). In other embodiments, it should be understood that the second power source **245** may comprise a capacitor device capable of being recharged over time and intermittently discharging a current burst to activate the drive system **105**.

Accordingly, the infusion pump system **10** having two power sources **345** and **245**—one arranged in the pump device **100** and another arranged in the reusable controller device **200**—permits a user to continually operate the controller device **200** without having to recharge a battery via a wall-plug or other cable. Because the controller device **200** can be reusable with a number of pump devices **100** (e.g., attach the new pump device **100'** after the previous pump device **100** is expended and disposed), the second power source **245** in the controller device can be recharged over a period of time each time a new pump device **100** is connected thereto. Such a configuration can be advantageous in those embodiments in which the pump device **100** is configured to be a disposable, one-time-use device that attaches to a reusable controller device **200**. For example, in those embodiments, the "disposable" pump devices **100** recharge the second power source **245** in the "reusable" controller device **200**, thereby reducing or possibly eliminating the need for separate recharging of the controller device **200** via a power cord plugged into a wall outlet.

Referring now to FIGS. **18-20**, the pump device **100** may include a drive system **300** that is controlled by the removable controller device **200** (FIGS. **1-5**). Accordingly, the drive system **300** can accurately and incrementally dispense fluid from the pump device **100** in a controlled manner. The drive system **300** may include a flexible piston rod **370** that is incrementally advanced toward the medicine cartridge **120** so as to dispense the medicine from the pump device **100**. At least a portion of the drive system **300** is mounted, in this embodiment, to the pump housing **110**. In this embodiment, the pump housing **110** includes a chassis **107**, a shell portion **108**, and a cover mount **109**. The shell portion **108** can be used to cover at least a portion of the drive system **300**. For example, the shell **108** may include an inner curved surface against which a curved section of a piston rod **370** rests. The cover mount **109** may be assembled to the chassis **107** of the pump housing **110** to secure some components of the drive system **300** in position between the cover mount **109** and the chassis **107**. When the cover mount **109** is assembled into place, the "unused" or retracted

portion of the piston rod **370** may rest in a channel defined in the top of the cover mount **109**. The shell portion **108** can slide over the cover mount **109** and join with the chassis **107** to form the assembled pump housing **110**.

Some embodiments of the drive system **300** may include a battery powered actuator (e.g., reversible motor **320** or the like) that resets a ratchet mechanism **330**, a spring device **350** (FIG. **22**) that provides the driving force to the ratchet mechanism **330**, and a drive wheel **360** that is rotated by the ratchet mechanism **330** to advance the flexible piston rod **370** toward the medicine cartridge **120**. The operation of the drive system **300** is described in more detail below in connection with FIGS. **22-25**.

As shown in FIGS. **19-20**, the pump device **100** can include one or more motion detectors coupled with the drive system **300** to provide feedback regarding the operation of the drive system **300**. For example, the pump device **100** may include a first motion detector **302** configured as a limit switch that detects when a portion of the ratchet mechanism has reached the limit of its travel and must thereafter stop movement or reverse direction. The operation of the limit switch **302** is described in more detail below in connection with FIGS. **22-25**. In another example, the pump device **100** may include a second motion detector **307** in the form of a mechanical error switch that indicates whether components of the drive system **300** completed the desired motion for each drive cycle. The operation of the mechanical error switch **307** is described in more detail below in connection with FIGS. **22-25**.

Referring to FIGS. **19-20**, the pump device **100** includes a connector circuit **310** to facilitate the transfer of signals to and from the electrical connector **118**. As previously described, the electrical connector **118** of the pump device **100** mates with the connector **218** (FIG. **4**) of the controller device **200** so that electrical communication can occur between the pump device **100** and the controller device **200**. The connector circuit **310** may comprise a generally non-complex circuit **310** that does not include a processor or other relatively high-cost components. In this embodiment, the connector circuit **310** operates as a passageway for the control signals (from the control circuitry **240** (FIG. **17**) of the controller device **200**) to transmit to the drive system **300** (e.g., to the actuator **320**). For example, the reversible motor **320** may be connected to the connector circuit **310** via one or more wires **304**. The connector circuit **310** also operates as a passageway for the electrical power from the first battery **345** (FIG. **19**) to pass to the controller device **200** for recharging of the second battery **245** (FIG. **17**). For example, the first battery **345** may be connected to the connector circuit **310** via one or more power contacts **305**. Furthermore, the connector circuit **310** operates as a passageway for feedback signals (e.g., from the motion detectors **302** and **307**) to transmit to the control circuitry **240** (FIG. **17**) of the controller device **200**. For example, the limit switch **302** may be connected to the connector circuit **310** via one or more wires **306** (the one or more wires connecting the mechanical error switch **307** to the connector circuit **310** are not shown in FIGS. **19-20**).

In some embodiments, the connector circuit **310** in the pump device **100** includes a memory device **318** that can store data regarding the pump device **100** and its operational history. For example, the memory device **318** of the connector circuit **310** may include a flash memory chip that is configured to store data such as: a unique serial number designated for the pump device **100**, a manufacturer identifier code, and a drive cycle counter. The unique serial number designated for the pump device **100** and the manufacturer identifier code may be useful pieces of quality control information that remains with the pump device **100** throughout its shelf-life and operational life. If, for example, a manufacturing error is identified for a particular pump device **100**, the unique serial number and the manufacturer identifier code (e.g., a lot code) can be used to promptly identify the manufacturing location and its manufacturing lot.

The drive cycle counter stored in the memory device **318** can be useful for maintaining an accurate estimate of the volume of medicine that remains in the medicine cartridge **120**. For example, the number of drive cycles that are required to incrementally advance the plunger **125** and thereby dispense a full medicine cartridge **120** may be a predetermined value (e.g., in some embodiments, 6,300 drive cycles result in full dispensation of a new medicine cartridge). Accordingly, the drive cycle counter stored in the memory device **318** can keep track of the number of drive cycles that have occurred through the operational life of the pump device **100**. Each time the motor **320** completes a new drive cycle and incrementally advances the piston rod **370** to dispense some medicine, the controller device **200** can store an updated value for the drive cycle counter stored in the memory device **318**. When the updated value stored in drive cycle counter stored in the memory device **318** approaches the predetermined value, the controller device **200** can alert the user that the medicine cartridge is approaching exhaustion. Furthermore, because the memory device **318** is arranged in the pump device **100**, the drive cycle counter stored in the memory device **318** remains local to the pump device **100**. If the pump device **100** is temporarily disconnected from the controller device **200** and then reconnected (or reconnected to a different controller device **200**), the controller device **200** can retrieve the value for the drive cycle counter stored in the memory device **318** and promptly ascertain how much medicine remains in the medicine cartridge **120**.

Still referring to FIGS. **19-20**, in some embodiments, the flexible piston rod **370** comprises a plurality of segments **372** serially connected by hinge portions **373** so that the flexible piston rod **370** is adjustable from a curved shape to a noncurved shape. The plurality of segments **372** and the interconnecting hinge portions **373** can be integrally formed in one piece from one or more moldable materials, including polymer materials such as Nylon or POM. In this embodiment, each of the plurality of rod segments **372** includes an exterior thread pattern **374** along at least one cylindrical surface portion. The piston rod **370** also includes a plunger engagement device **375** can be arranged at a forward end of the piston rod **370**. As such, the plunger engagement device **375** faces toward the medicine cartridge **120** when the medicine cartridge **120** is inserted into the cavity **116**. In some embodiments, the plunger engagement device **375** may comprise a pusher disc that abuts against the plunger **125** of the medicine device (refer, for example, to FIG. **21**).

Referring to FIG. **21**, some embodiments of the piston rod **370** can be optionally configured to attach with the medicine cartridge **120** when the medicine cartridge **120** is advanced into the cavity **116**. For example, when the cap device **130** (refer to FIG. **1**) is attached to the pump housing **110** to retain the medicine cartridge **120** therein, a portion of the cap device **130** can push upon the body of the cartridge **120**. As shown in FIG. **21**, a longitudinal force **140** may be applied to the medicine cartridge **120** during engagement of the cap device **130** to the pump housing **110**. This longitudinal force **140** can be used to urge a portion of the medicine cartridge **120** (e.g., the plunger **125** in this embodiment) to

secure to a plunger engagement device **375** (FIG. **21**) that is optionally included on the piston rod **370**. In some embodiments, the plunger engagement device **375** may include penetration members **376** (three such members **376** in the example depicted in FIG. **21**) that penetrate into the plunger **125** of the medicine cartridge **120** and thereby secure the medicine cartridge **120** to the piston rod **170**. (It should be understood that FIGS. **18-19** depicts the piston rod **370** arranged in the pump housing **110** of the pump device **100**, and FIG. **21** shows a similar view with the piston rod **370** with other portions of the pump device **100** removed for purposes of illustrating the piston rod **370** and medicine cartridge **120**.) In this embodiment, the plunger engagement device **375** includes a plurality of penetration members **376** that extend from a pusher disc **378** toward the plunger **125** and are configured to penetrate into the plunger **125** in response to the longitudinal force **140** (FIGS. **7**B and **10**). Thereafter, the plunger **125** may remain secured to the piston rod **370** during operation of the pump device **100**, which may serve to reduce the compliance of the plunger material and thereby increase the dosage accuracy. Furthermore, the penetration members **376** secure the plunger **125** to the drive system (e.g., to the piston rod **370** in this embodiment), so the plunger **125** does not necessarily become displaced when the medicine cartridge **120** is impacted. For example, if the pump device **100** is dropped on the ground and undergoes an impact, the plunger **125** may be retained in its position relative to the wall of the cartridge **120** due to the attachment with the piston rod **370** via the penetration members **376**.

In some embodiments, the flexible piston rod **370** can include an anti-rotation structure that hinders the piston rod **370** from rotating with the drive wheel **360** (thereby allowing the rotation of the drive wheel **360** to translate into a longitudinal motion of the piston rod **370**). For example, as shown in FIGS. **19-21**, the flexible piston **370** includes longitudinal flat surfaces **371** extending along each of the segments **372**. The longitudinal flat surfaces **371** can engage a complementary surface on the pump housing **110** (not shown in FIGS. **19-21**) proximate the drive wheel **360** so that the flexible piston rod **370** is hindered from rotating when the drive wheel **360** turns. Accordingly, the longitudinal flat surfaces **371** on each segment **372** align to form a key that is received in a mating keyway (e.g., a complementary flat surface) on the pump housing. In other embodiments, the anti-rotation structure may include one or more longitudinal channels (with each channel capable of engaging an associated protrusion that acts as a key to hinder rotation while permitting longitudinal motion) or the like.

Because the flexible piston rod **370** is adjustable from a curved shape to a noncurved shape, the overall length of the pump device can be reduced in some embodiments. For example, in a typical infusion pump that houses a straight and rigid rod, the typical infusion pump requires a package or housing having a linear dimension sufficient to accommodate the length of the rigid piston rod when it is at its limit of travel in which it is fully withdrawn from the container or cylinder. The pump device **100** incorporating the flexible piston rod **370** can require less space than a similar device that houses a non-flexible, rigid rod.

Referring now in more detail to the components of the drive system **300** depicted in FIGS. **22-25**, the electrically powered actuator may be in the form of the motor **320** having a rotatable output shaft **321**. In this embodiment, the motor **320** is reversible in that can receive signals that cause the output shaft **321** to rotate in a first rotational direction or in a second, opposite rotational direction. One example of a suitable motor **320** is a coreless DC motor with reversible rotation capabilities. As previously described, the operation of the motor **320** can be controlled by the removable controller device **200** (FIGS. **1-5**) via electrical signals communicated through the mating electrical connectors **118** and **218** (FIGS. **4-5**).

Still referring to FIGS. **22-25**, a gear system **322** may be coupled to the motor **320** so that actuation by the motor **320** causes a pusher arm **325** to act upon the ratchet mechanism **330** or to decouple from the ratchet mechanism **330**. In this embodiment, the gear system **322** includes a worm gear **323** and a gear reduction assembly comprising spur gears **324***a*, **324***b*, and **324***c*. As described in more detail below, one of the spur gears (e.g., segmented gear **324***c*) may engage the limit switch **302** when it reaches the opposite ends of its reciprocating motion, thereby indicating that the motor **320** should reverse its rotational direction or stop rotating.

The pusher arm **325** can be pivotably coupled to the gear **324***c* so that partial rotation of the gear **324***c* causes the pusher arm to reciprocate within a guide slot **328**. The guide slot **328** can be formed in the body of the chassis **307** (FIGS. **18-20**) of the pump housing. The pusher arm **325** can have a slider pin **326** that fits into the guide slot **328** are reciprocates therein.

Accordingly, rotation of the motor **320** in a first direction can be translated into an advancement force to the pusher arm **325**. The advancement force on the pusher arm **325** is applied to a pawl member **335**, which (in this embodiment) causes the pawl member **335** to pivot to a reset position (refer to FIG. **29**). In addition, rotation of the motor **320** in a second direction can be translated into an retraction force to the pusher arm **325**, which can cause the pusher arm **325** to be separated from the pawl member **335** during the drive step (refer to FIG. **25**). As such, the motor **320**, the gear system **322**, and the pusher arm **325** can collectively operate as an actuator assembly that provides a reliable and consistent adjustment of the ratchet mechanism **330** during a reset step (refer to FIG. **24**). Moreover, this actuator assembly (e.g., the motor **320**, the gear system **322**, and the pusher arm **325**) can be activated to separate from the pawl member **335**, thereby permitting the motor **320** to decouple from the ratchet mechanism **330** during a drive step (refer to FIG. **25**).

Referring to FIG. **22**, the motion path of the pusher arm **325** can be configured to provide an efficient mechanical advantage orientation during the desired motion of the adjustable pawl member **335**. In this embodiment, the pusher arm **325** is directed by the guide slot **328** formed in an interior surface of the pump housing **110**. In this embodiment, the pusher arm **325** includes the slider pin **326** that is received within the guide slot **328** during assembly of the pump device **100**. The portion of the pusher arm **325** proximate the slider pin **326** can abut against the pawl member **335** when the pusher arm **325** is advanced. As such, when a first end of the pusher arm **325** is moved by the gear **324***c*, a second end of the pusher arm (proximate the slider pin **326**) is directed by the guide slot **328**. The orientation of the pusher arm **325** relative to the guide slot **328** can be configured to provide an efficient mechanical advantage for the pushing force applied by the pusher arm **325** during the desired motion of the adjustable pawl member **335**.

Still referring to FIG. **22**, the ratchet mechanism **330** includes the pawl member **335** and a ratchet body **340**, which in this embodiment is a ratchet wheel having a number of teeth along its circumferential surface. In this embodiment, the ratchet wheel **340** is coupled with a worm gear **344**, and incremental rotation of the ratchet wheel **340** causes rotation of a drive wheel **360** (due to engagement with the worm gear **344**). The pawl member **335** is adjust-

able between a reset position (refer to FIG. **24**) and a forward position (refer to FIG. **25**). For example, during the reset step, the motor **320** may be activated to advance the pusher arm **325** (guided by the guide slot **328**), and the pusher arm **325** then applies a pushing force that adjusts the pawl member **335** to the reset position in which the pawl member **335** grabs a new tooth of the ratchet wheel **340** (refer to FIG. **24**). In this embodiment, the adjustable pawl member **335** is pivotably coupled to about the axis of rotation for the ratchet wheel **340** and the worm gear **344**.

A spring device **350** is also coupled to the pawl member **335** so as to urge the pawl member **335** toward the forward position (refer to FIG. **25**). In this embodiment, the spring device **350** is in the form of a coil spring that is fixed to the pump housing **110** (not shown in FIGS. **22-25**) at a first end portion **352** and that is engaged with the pawl member **335** at a second end portion **354**. Thus, as shown in FIG. **24**, when the pawl member **335** is adjusted to the reset position, the spring device **350** is in tension and stores potential energy that urges the pawl member **335** to return to the forward position (refer to FIG. **25**) and thereby drive the ratchet wheel **340** in a forward rotational direction.

In some embodiments, a locking pawl **342** can be used to prevent the ratchet wheel **340** from reverse motion. The locking pawl **342** can flex or otherwise adjust to permit the incremental forward rotation of the ratchet wheel **340**. As such, the adjustable pawl member **335** can adjust from the forward position (refer to FIG. **28**) to the reset position (refer to FIG. **29**) to engage a new tooth of the ratchet wheel **340** while the ratchet wheel **340** remains in position due to the locking pawl **342**.

Still referring to FIG. **22**, in some embodiments the ratchet wheel **340** can be integrally formed with the worm gear **344** so that the incremental rotation of the ratchet wheel **340** is translated to the worm gear **344**. Such rotation of the worm gear **344** causes rotation of the drive wheel **360**. The drive wheel **360** includes a central aperture having an internal thread pattern therein (not shown in FIG. **22**), which mates is an external thread pattern **374** on the rod segments **372**. Thus, the incremental motion provided by the ratchet mechanism **330**, the pusher arm **325**, and the motor **320** causes the drive wheel **360** to incrementally rotate, which in turn translates to a longitudinal advancement of the flexible piston rod **370**.

Accordingly, in these embodiments, the piston rod **370** may undergo only forward or positive longitudinal displacement as a result of drive system **300**. For example, the drive system **300** substantially hinders the piston rod **370** from retracting or "backing up" in response to fluid pressure in the medicine cartridge **120** or other reversal forces. In such circumstances, the flexible piston rod **370** can be retracted only upon manual disassembly of the pump device **100** (e.g., to disengage the drive gear **360** or the ratchet mechanism **330**). In those embodiments in which the pump device **100** is intended to be disposable and non-reusable, the non-retractable piston rod configuration may facilitate a "one time use" disposable pump device by hinder attempts to insert a new medicine cartridge **120** in a previously used pump device **100**. Such a configuration can thereby reducing the likelihood of failure due to non-intended repeated use of the disposable pump device **100**.

In the embodiment depicted in FIGS. **22-23**, the pump device includes at least two motion detectors **302** and **307**. As previously described, the first motion detector **302** may comprise a limit switch that is activated when the segmented gear **324***c* of the gear system **320** reaches the ends of its reciprocating travel path. For example, as shown in FIG. **23**, the limit switch **302** may include a middle arm **303***a* that is arranged between two lateral arms **303***b-c*. When the motor **320** rotates and causes the segmented gear **324***c* to rotate in a first direction along its travel path, the middle arm **303***a* of the limit switch **302** engages a first wall of the segmented gear **324** when the gear **324** reaches the end of its travel path. This causes the middle arm **303***a* to flex and thereby contact one of the lateral arms **303***b*, which signals to the controller device **200** that the gear **324***c* (and the rotational motor **320**) reached the end of its travel path. Thereafter, the controller device **200** signals the motor **320** to reverse its rotation, which causes the segmented gear to reciprocate back toward the opposite end of its travel path. When the segmented gear **324***c* reaches the opposite end of its travel path, the middle arm **303***a* of the limit switch **302** engages a second wall of the segmented gear **324**. This causes the middle arm **303***a* to flex and thereby contact the opposite lateral arm **303***c*, which signals to the controller device **200** that the gear **324***c* (and the rotational motor **320**) reached the opposite end of its travel path. Thereafter, the controller device **200** signals the motor **320** to cease rotation until a later time when a new drive cycle is signaled.

As previously described, the second motion detector **307** may comprise a mechanical error switch that is activated when the worm gear **344** is incrementally rotated with each drive cycle. For example, as shown in FIG. **23**, mechanical error switch **307** may include a first arm **3083***a* that is arranged adjacent to a second arm **308***b*. The first arm **308***a* has a longer length so that is can be engaged by the threads of the worm gear **344**. Accordingly, when the drive system **300** operates to incrementally rotate the worm gear **344**, the first arm **308***a* is temporarily flexed into contact with the second arm **308***b*. This temporary contact signals to the controller device **200** that the ratchet mechanism **330** and spring **350** successfully translated the drive energy to rotate the worm gear **344** (which rotates the drive gear **360** and thereby advances the piston rod **370**).

Accordingly, the pump device **100** can include one or more motion detectors coupled with the drive system **300** to provide feedback regarding the operation of the drive system **300**. It should be understood that, in other embodiments, these detectors can be optical, magnetic, or other contact-type sensors. The detectors can be capable of transmitting signals that indicate when components of the drive system **300** (e.g., one of the gears in the gear system **322**, the pusher arm **325**, or the pawl member **335**) has completed a particular motion. Such detector signals may be transmitted to the motor **330**, to the controller device **200** (FIGS. **1-5**), or a combination thereof.

Referring now to FIGS. **24-25**, the incremental motion cycle of the drive system **300** may include rotation of the motor **320** so that the pusher arm **325** is advanced from a first position to act upon the pawl member **335** and then retracted back to the first position. Such movement of the pusher arm **325** can cause the pawl member **335** to adjust from the forward position, to the reset position (refer to FIG. **24**), and back to the forward position (refer to FIG. **25**) under the driving force of the spring device **350**. The adjustment of the pawl member **352** from the reset position to the forward position drives the ratchet wheel **340** and worm gear **344**, which incrementally rotates the drive wheel **360** and thereby advances the flexible piston rod **370** a longitudinal increment distance. In one example, the drive system **300** can advance the piston rod **370** a longitudinal increment distance of about 16 microns or less (about 4 microns to about 12 microns, about 5 microns to about 9 microns, and preferably

about 6 microns to about 8 microns) for each incremental motion cycle of the ratchet mechanism **330**.

In this embodiment of the incremental motion cycle, the pawl member **335** begins with the pusher arm **325** retracted in a first position (e.g., the rest position in this embodiment). The adjustable pawl member **335** can be in this forward position, for example, because the drive system **300** previously completed a drive step at an earlier time.

Referring to FIG. **24**, in response to the controller device transmitting a signal to initiate the cycle, the motor **320** may begin to rotate in a first rotational direction that advances the pusher arm **325** to push against the pawl member **335**. Such movement of the pusher arm **325** causes a pushing force **327** that overcomes the bias of the spring device **350** and adjusts the pawl member **335** toward the reset position (e.g., the reset step). When the adjustable pawl member **335** reaches the reset position, as shown in FIG. **24**, the pawl member **335** is capable of engaging a new tooth of the ratchet wheel **340**. The locking pawl **342** prevents the ratchet wheel **340** from rotating in a reverse (non-forward) rotational direction while the adjustable pawl member **335** is shifting back to the reset position. Such an adjustment of the pawl member **335** back to the reset position creates a tension force **357** in the spring device **350** (as shown in FIG. **24**), thereby storing potential energy to drive the adjustable pawl member **335** and ratchet wheel **340** in a forward rotational direction for the drive step.

Referring to FIG. **25**, after the pawl member **335** reaches the reset position, the motor **330** stops rotating in the first rotational direction and reverses to rotate in the second, opposite rotational direction. Such rotation in the second direction by the motor **320** causes the pusher arm **325** to promptly retract to the first position (while guided by the guide slot **328**). As such, the spring device **350** begins to urge the pawl member **335** toward the forward position. When the adjustable pawl **335** is driving the ratchet wheel **340** in the forward rotational direction, the potential energy of the spring device **350** is being translated to kinetic energy for the motion of the pawl member **335** and the ratchet wheel **340**. Such an adjustment of the pawl member **335** from the reset position to the forward position drives the ratchet wheel **340** and the integrally formed worm gear **344**. The incremental rotation of the worm gear **344** results in an incremental rotation by the drive wheel **360**, which advances the flexible piston rod **370** a longitudinal increment distance. Such an incremental advancement of the flexible piston rod **370** can cause a predetermined volume of fluid to be dispensed from the cartridge **120**. In the event of a subsequent cycle (including the reset step and the drive step), the motor **320** would begin by rotating in the first rotational direction so as to advance the pusher arm **325** yet again. This pattern of cycles may continue until the piston rod **370** has reached the limit of its longitudinal travel.

Still referring to FIG. **25**, although the pusher arm **325** can be promptly retracted to the first position due to the reverse rotation of the motor **320**, the pawl member **335** is driven to the forward position (refer to the motion **329** in FIG. **25**) over a greater period of time. This period of time required for the drive step is affected by a number of factors, including the spring force from the spring device **350**, the fluid pressure inside the medicine cartridge **120**, and the like. Accordingly, the pusher arm **325** can be temporarily separated from the pawl member **335** when it is retracted to its first position, thereby causing the motor **320** to be decoupled from the ratchet mechanism **330** during the drive step. For example, the portion of the pusher arm **325** proximate the slider pin **326** can become temporarily spaced apart by a distance **329** from the pawl member **335** while the pawl member **335** is being driven from the reset position (FIG. **29**) to the forward position (FIG. **28**). Such a configuration permits the motor **320** to expend a short burst of electrical energy to reset the ratchet mechanism **330** (e.g., during advancement of the pusher arm **325**) while contributing no energy during the drive step to drive the ratchet mechanism **330** to the forward position for dispensation of medicine. Because the motor **320** can be decoupled from the ratchet mechanism **330** during the drive step, only the spring device **350** expends energy over a period of time to drive the ratchet mechanism **330** to the forward position. Accordingly, the pump device **100** can reliably and accurately dispense dosages of medicine in a safe and energy efficient manner. In particular, the motor **320** is not required to draw energy from the battery over an extended period of time (e.g., during the drive step in which the piston rod **370** is advanced to dispense medicine over a period of time). Instead, the motor **320** may draw upon the battery power during advancement of the pusher arm **325** to quickly reset the ratchet mechanism **330** and during the brief retraction of the pusher arm **325**.

Moreover, the reversible rotation of the motor **320** may provide enhanced safety. As previously described, each drive cycle (including the reset step and the drive step) includes rotation of the motor **320** in a first direction and subsequent rotation in a second opposite direction. Thus, in certain embodiments, if a short-circuit or other malfunction of the motor **320** causes continuous rotation of the motor **320** in one direction, such a malfunction does not result in continuous dispensation (e.g., a possible over dosage) of medicine to the user. Accordingly, the drive system **300** can be reliably operated to dispense the selected dosages of medicine.

Referring now to FIGS. **26-33**, the infusion pump system **10** can be equipped with an occlusion sensor that detects occlusions in the fluid flow path extending to the user. For example, the controller device **200** may include an optical sensor system **250** that detects the amount of light reflected from a portion of the cap device **130**. In this embodiment, the optical sensor system **250** can detect changes in the amount of light reflected from the cap device **130** in response to an occlusion that causes an increase in the fluid pressure. For example, as described below in connection with FIGS. **32-33**, the optical sensor system **250** may operate using the principle of total internal reflection.

Referring to FIG. **26**, although the optical sensor system **250** operates to detect changes in the flow path from the pump device **100** (e.g., through the cap device **130**), the optical sensor system **250** may include a number of components that are housed in the controller device **200**. For example, a light emitter and light sensor may be arranged on a sensor circuit **252** that is housed by the controller device **200**, thereby permitting these components to be reused along with the controller device (while the relatively low cost components in the pump device **100** are discarded after the "one time use" of the pump device **100**). The sensor circuit **252** can be arranged so that the cap device **130** is aligned with the light emitter and the light sensor (described below) when the pump device **100** is attached to the controller device **200**. It should be understood that the pump housing **110** and the controller housing **210** have been removed from FIG. **26** for purposes of showing the relative position of the sensor circuit **252** (in the controller device **200** as shown in FIGS. **4-5**) and the cap device **130** (attached to the pump housing **110** as shown in FIG. **4-5**).

The sensor circuit **252** can be connected to the control circuitry **240** of the controller device **200** (FIG. **17**) via a flexible circuit substrate or one or more wires. In this embodiment, the sensor circuit **252** connects with the main processor board **242** via a flexible circuit substrate. As such, the control circuitry **240** can receive sensor signals and employ detection software stored in one or more memory devices to determine if an occlusion exists. If the sensor signals from optical sensor system **250** indicate that an occlusion exists in the fluid flow path, the controller device **200** can trigger an alert to inform the user. The alert may include a visual or audible alarm communicated via the user interface **220** of the controller device **200**.

Referring to FIG. **27**, the cap device **130** can have a multi-piece construction that provides a flow path from the medicine container **120** to the output port **139** (and to the infusion set tubing **147**). At least a portion of the flow path through the cap device **130** may be monitored by the optical sensor system **250** to determine if an occlusion exists downstream of the cap device **130** (e.g., if a kink or clog exists in the infusion set tubing **147** of cannula **149**). The multi-piece construction of the cap device **130** can facilitate proper alignment of the cap device **130** and proper engagement with the medicine cartridge **120** during attachment of the cap device **130** to the pump housing **110**. For example, the cap device **130** may include a first component **136** that is movably engaged with a second component **137**. During attachment of the cap device **130** to the pump housing, the first component **136** can be rotated relative to the second component **137**, which causes the second component **137** to advance longitudinally toward the medicine cartridge **120**. In such circumstances, a needle penetrator **133** attached to the second component **137** can be advanced toward the septum **121** of the medicine cartridge **120** to pierce the septum and open a fluid flow path. The flow path for the medicine that is dispensed from the medicine cartridge **120** can pass through the needle penetrator **133**, through a fluid channel **260** (described below), through the infusion set tubing **147**, and to the user.

The fluid channel **260** arranged in the cap device **130** may be at least partially defined by a flexible member **264**. For example, in this embodiment, one side of the fluid channel **260** is defined by the flexible membrane **264** so that the channel **260** through which the medicine travels includes a portion that is flexible. An air cavity **265** is disposed adjacent to the flexible membrane **264** opposite to the fluid channel **260**, thus providing a volume into which the flexible membrane **264** can expand as pressure rises in the fluid channel **260**. The flexible membrane **264** may comprise a flexible polymer material that bulges or otherwise deforms as the fluid pressure in the flow channel **260** rises. As such, the flexible membrane **264** can flex into the air cavity **265** when the fluid pressure rises due to an occlusion in the flow path downstream of the fluid channel **260**.

Referring now to FIGS. **28-29**, the sensor circuit **252** can be arranged so that fluid channel **260** in the cap device **130** is aligned with the light emitter **253** and the light sensor **258** when the pump device **100** is attached to the controller device **200**. Thus, when the infusion pump system **10** is operating to dispense medicine, the light emitter **253** in the controller device **200** can direct light toward the fluid channel **260** in the cap device **130**, and the light sensor **258** can receive light reflected from portions of the cap device **130**. A cross-section through the cap device **130** and the controller device **200** (refer to FIGS. **28-29**) illustrates one example of the alignment. It should be understood from the description herein that other alignment configurations can be implemented so that the light sensor **258** in the reusable controller device **200** is able to detect changes to fluid flow conditions in the pump device **100**.

In this embodiment, the sensor circuit **252** is arranged to at least partially extend to the barrel channel **211** (FIGS. **4-5**) of the controller device **200** so that the light emitter **253** and the light sensor **258** are positioned adjacent to the cap device **130**. As previously described, the tabs **132** of the cap device **130** can be positioned in a manner that facilitates the particular orientation of the cap device **130** relative to the sensor circuit **252**. The light from the light emitter **253** can pass through one or more portions of the cap device **130** during its travel toward the fluid channel **260**, flexible membrane **264**, and air cavity **265**. Accordingly, some portions of the cap device **130** may comprise a generally transparent material to permit light transmission therethrough. In this embodiment, the first component **136** of the cap device **130** can include a generally transparent polymer material. Also, in some embodiments, some portions of the cap device **130** may include windows or openings to avoid interfering with the light from the light emitter **253**. For example, the second component **137** may includes openings at selected locations so that light from the light emitter **253** can pass by the second component **137** and to the internal light transmissive member **254**.

Still referring to FIGS. **28-29**, the internal light transmissive member **254** can be configured to receive light from the light emitter **253**, transmit at least a portion of that light toward the fluid channel **260**. In this embodiment, the internal light transmissive member **254** comprises a generally transparent polymer material that is capable of light transmission. As described in more detail below, the light that is transmitted in the transmission member **254** toward the fluid channel **260** can (in some circumstances) reflect from the interface where the internal light transmissive member **254** meets the air cavity **265**. This reflected light can be further transmitted through the internal light transmissive member **254** to the light sensor **258**.

Referring now to FIGS. **30-31**, the optical sensor system **250** can be used to detect when an occlusion exists in the flow path from the pump device **100** to the user. For example, when an occlusion occurs in the infusion set tubing **147** (FIGS. **6-7**), the delivery of medicine from the infusion pump system **10** to the user can be stopped or otherwise limited. If the user is unaware of the occlusion, the user may be deprived of the intended dosages of medicine from the infusion pump device for a period of time. Accordingly, the optical sensor system **250** can be used to detect when such occlusions occur in the flow path to the user, and the controller device **200** can thereafter alert the user of the occlusion when particular conditions are met. The user may then inspect the pump device **100** or the infusion set **146** to eliminate the occlusion.

As shown in FIG. **30**, when no substantial occlusion exists in the flow path, the medicine can be dispensed under normal operating conditions from the medicine cartridge **120**, through the cap device **130**, and into the infusion tubing **147**. In these normal operating conditions, the fluid pressure of the medicine passing through the cap device **130** may be below a selected threshold value. As such, the flexible membrane **264** that is adjacent to the fluid channel **260** is not substantially deformed (e.g., the membrane **264** does not flex downwardly into the air cavity **265** to abut the internal light transmissive member **254**). In these circumstances, the light from the light emitter **253** can be reflected at the interface where the internal light transmissive member **254** meets the air cavity **265**. In some embodiments, this light

reflection may occur due to total internal reflection that the interface. Total internal reflection can occur in some circumstances when light passes through a first medium (e.g., the internal light transmissive member **254**) and strikes an interface between the first medium and a second medium (e.g., the air cavity **265**) at an angle greater than the critical angle. If the refractive index of the second medium (e.g., the air cavity **265**) is lower than refractive index of the first medium (e.g., the internal light transmissive member **254**), the light may undergo total internal reflection within the first medium.

For example, as shown in FIG. **30**, the light emitter **253** can be an infrared light emitted that is directed toward the internal light transmissive member **254**. The infrared light passes through the generally transparent first component **136** of the cap device **130** and then strikes a curved surface **255** of the internal light transmissive member **254**. The infrared light may be refracted at the interface with the internal light transmissive member **254**. The curved surface **255** may operate as a focusing lens that directs the infrared light toward the air cavity **265** proximate to the fluid channel **260**. When the medicine is dispensed under normal operating conditions, the flexible membrane **264** does not flex downwardly into the air cavity **265** to abut the internal light transmissive member **254**. Accordingly, the infrared light passing through the internal light transmissive member **254** reflects at the interface where the internal light transmissive member **254** meets the air cavity **265**. This reflected light continues through the internal light transmissive member **254** toward a second curved surface **257**. The second curved surface **255** may operate as a focusing lens that directs the infrared light toward the light sensor **258**. The light sensor **258** may comprise an infrared photo detector that is capable of converting the receipt of infrared light into electrical signals. These electrical signals from the light sensor **258** can be transmitted via the sensor circuit **252** to the control circuitry **240** (FIGS. **17** and **26**) for processing to determine if an occlusion alarm should be provided to the user.

As shown in FIG. **31**, when an occlusion exists in the flow path, the fluid pressure of the medicine passing through the cap device **130** may rise to a level above the threshold value. For example, if pump device **100** attempts to dispense another incremental dosage medicine when the infusion set tubing **147** is clogged or kinked, the fluid pressure upstream of the occlusion (e.g., in the medicine cartridge **120** and in the cap device **130**) may be increased. In these circumstances, the flexible membrane **264** that is adjacent to the fluid channel **260** may be substantially deformed (e.g., the membrane **264** will flex downwardly into the air cavity **265** to abut the internal light transmissive member **254**.)

The interface where the internal light transmissive member **254** meets the flexible membrane **264** (FIG. **31**) provides different optical results than the previously described interface where the internal light transmissive member **254** meets the air cavity (FIG. **30**). In particular, the amount of light from the light emitter **253** that is internally reflected at the interface where the internal light transmissive member **254** meets the flexible membrane **264** is measurably less (as illustrated by the dotted lines in FIG. **31**). For example, none of the light or some other reduced portion of light from the light emitter **253** is internally reflected. (The light that is not internally reflected at this interface may pass into the medium of flexible membrane **264** as illustrated, for example, in FIG. **33**.) If any portion of the light is internally reflected, this reduced portion of reflected light continues through the internal light transmissive member **254** toward a second curved surface **257** and then toward the light sensor **258**. As previously, the light sensor **258** may comprise an infrared photo detector that is capable of converting the receipt of infrared light into electrical signals. Because amount of light that is internally reflected in the light transmissive member **254** is measurably less, the light sensor **258** can produce detection signals that are different from those described in connection with FIG. **30**. These detection signals may indicate that the fluid pressure in the cap device **130** has risen above a threshold level due to a downstream occlusion. Again, these detection signals from the light sensor **258** can be transmitted via the sensor circuit **252** to the control circuitry **240** (FIGS. **17** and **26**) for processing to determine if an occlusion alarm should be provided to the user.

Referring to FIGS. **32-33**, the process of determining whether an occlusion exists can be implemented using the control circuitry **240** of the controller device **200**. In particular, the control circuitry **240** can be used to activate the light emitter **253** and the light sensor **258** at selected times to monitor the fluid pressure in the flow path. For example, the control circuitry **240** can activate the light emitter **253** and the light sensor **258** one or more times before the drive system **300** (FIGS. **18-20**) is activated to force medicine from the medicine cartridge **120**, while the drive system **300** is activated, or after the drive system **300** is activated. The control circuitry **240** can receive detector signals from the light sensor **258** and thereafter process the data to determine if an alarm should be triggered to notify the user of an occlusion.

Referring to FIG. **32**, in this embodiment, the control circuitry **240** can activate the sensor circuit **252** one or more times shortly before the drive system **300** (FIGS. **18-20**) is activated to force medicine from the medicine cartridge **120**. When the sensor circuit **252** is activated, the light emitter **253** emits light toward the internal light transmissive member **254**. The light from the light emitter **253** can be in the form of an infrared light beam. As shown in FIG. **32**, when no substantial occlusion exists in the flow path, the fluid pressure of the medicine passing through the cap device **130** may be below a selected threshold value. In these circumstances, the flexible membrane **264** that is adjacent to the fluid channel **260** is not substantially deformed (e.g., the membrane **264** does not flex downwardly into the air cavity **265** to abut the internal light transmissive member **254**). As previously described in connection with FIG. **30**, the light from the light emitter **253** can be reflected at the interface where the internal light transmissive member **254** meets the air cavity **265**. In some embodiments, this light reflection may occur due to total internal reflection at the interface. This reflected light continues through the internal light transmissive member **254** toward a second curved surface **257**. The second curved surface **255** may operate as a focusing lens that directs the infrared light toward the light sensor **258**. As previously described, in some embodiments, the light sensor **258** may comprise an infrared photo detector that is capable of converting the receipt of infrared light into electrical signals. These electrical signals from the light sensor **258** can be transmitted via the sensor circuit **252** to the control circuitry **240**. The control circuitry **240** receives the signals from the light sensor **258** and uses this data to determine if an occlusion alarm should be provided to the user. In this example depicted in FIG. **32**, the control circuitry **240** receives signals that indicate the pressure in the fluid channel **260** is within the normal operating range, so the control circuitry would not trigger an alarm for the user.

Referring to FIG. **33**, again, the control circuitry **240** can activate the sensor circuit **252** one or more times shortly

before the drive system **300** (FIGS. **18-20**) is activated to force medicine from the medicine cartridge **120**. When the sensor circuit **252** is activated, the light emitter **253** emits light toward the light transmissive member **254**. When an occlusion exists in the flow path, the fluid pressure of the medicine passing through the cap device **130** may rise to a level above the threshold value. For example, when one or more earlier drive cycles were attempted while the infusion set tubing **147** is clogged or kinked, the fluid pressure upstream of the occlusion (e.g., in the medicine cartridge **120** and in the cap device **130**) can be increased. In these circumstances, the flexible membrane **264** that is adjacent to the fluid channel **260** may be substantially deformed (e.g., the membrane **264** will flex downwardly into the air cavity **265** to abut the light transmissive member **254**.) As previously described in connection with FIG. **31**, the interface where the light transmissive member **254** meets the flexible membrane **264** (FIGS. **31** and **33**) provides different optical results than the previously described interface where the light transmissive member **254** meets the air cavity (FIGS. **30** and **32**). In particular, the amount of light from the light emitter **253** that is internally reflected at the interface where the light transmissive member **254** meets the flexible membrane **264** is measurably less (as illustrated by the dotted lines in FIG. **33**).

As shown in FIG. **33**, the light that is not internally reflected at this interface may pass into the medium of flexible membrane **264** and perhaps into the fluid channel **260**. For example, the refractive index of the material of the flexible membrane **264** can be substantially similar to that of the material of the light transmissive member **254**. As a result, the light being transmitted through the light transmissive member **254** can pass into the flexible membrane **264** when the membrane **264** flexes into the air cavity **265** and contacts the flat surface of the light transmissive member **254**. The light from the light emitter **253** does not undergo total internal reflection at the portion where the flexible membrane **264** interfaces with light transmissive member **254**, thereby resulting in reduced amount of light received by the light sensor **258**. If any portion of the light is internally reflected, this reduced portion of reflected light continues through the light transmissive member **254** toward a second curved surface **257** and then toward the light sensor **258**. Because the amount of light that is internally reflected in the light transmissive member **254** is measurably less, the light sensor **258** can produce detection signals that are different from those described in connection with FIG. **32**. These detection signals from the light sensor **258** can be transmitted via the sensor circuit **252** to the control circuitry **240**. The control circuitry **240** receives the signals from the light sensor **258** and uses this data to determine if an occlusion alarm should be provided to the user. In this example depicted in FIG. **33**, these detection signals may indicate that the fluid pressure in the cap device **130** has risen above the threshold level due to a downstream occlusion.

As previously described, the control circuitry **240** receives the signals from the light sensor **258** and uses this data to determine if an occlusion alarm should be provided to the user. For example, the control circuitry **240** may include a detection software module and an alarm trigger module stored in one or more memory devices (e.g., on the main processor board **242**).

The detection software module may include instructions to use the data signals from the light sensor **258** as input data for a comparative algorithm that determines if an occlusion exists. The comparative algorithm can, for example, compare the data values from the light sensor **258** to an initial value recorded when the pump device **100** was initially activated with no occlusions in the flow path. Alternatively, the comparative algorithm can, for example, average the data values from the light sensor **258** recorded over a predetermined period of time (e.g., 2 minutes, 5 minutes, 10 minutes, 30 minutes, or the like) or over a predetermined number of pump drive cycles (e.g., the last 3 drive cycles, the last 5 drive cycles, the last 10 drive cycles). Then, this average value can be compare to an initial value recorded when the pump device **100** was initially activated with no occlusions in the flow path. These comparative algorithms can be used to reduce the instances of "false alarms" that are provided to the user, and in some cases, can be used to reduce error created by noise in the sensor system. It should be understood from the description herein that, in other embodiments, the detection software module may employ other algorithms to process the data and thereby determine if an occlusion exists.

If the detection software module indicates than an occlusion exists, the control circuitry **240** can activate the alarm trigger module to alert the user. The alarm trigger module can be used to activate the user interface **220** (FIGS. **1-2**) to communicate one or more alarms. For example, the alarm trigger module of the control circuitry may be used to activate an audible alarm, a visual alarm (e.g., on the display device **222** (FIGS. **1-2**)), or a combination thereof. In some embodiments, the alarm trigger module is configured to provide a set of escalating alarms. For example, the first stage of the alarm may include a low intensity audible alert followed by a textual alarm on the display device. If the user does not respond after a predetermined period of time (e.g., 10 seconds, 30 seconds, or the like), the alarm trigger module may then provide a high intensity audible alert (e.g., louder alert) in combination with a visual alarm having image effects on the display device (e.g., a blinking screen, alternating images, or the like). The alarm trigger module may include further stages of alarm if the user does not respond after a predetermined period of time. When the user is alerted to the occlusion in the flow path, the user can inspect the infusion set tubing **147** and the cannula **149** to determine if there is a repairable kink. If the occlusion is substantial, the user can suspend the operation of the infusion pump system **10** and replace the infusion set **146** with a new infusion set **146**.

Referring to FIGS. **34-38**, some embodiments of the occlusion sensor system **250** may operate to detect changes in the pressure of the fluid even though the flexible membrane is not positioned against the medicine flow path. For example, in this embodiment, the flexible membrane **264'** is not positioned against the medicine flow path through the fluid channel **260'** of the cap device **130**. Instead, the flexible member **264'** is arranged near a terminal end of a capillary tube **261'** that offshoots from the fluid channel **260'**. The capillary tube **261'** may have an orientation and size such that a pocket of air is trapped in the capillary tube **261'** as the medicine flows through the fluid channel **260'** and to the infusion set tubing **147** (e.g., during an initial priming operation or the like). Accordingly, the infusion pump system **10** can operate to dispense the medicine from the cartridge **120** and through the fluid channel **260'** without the requirement that the medicine contacts the material of the membrane **264'** (described in more detail below in connection with FIGS. **35-36**). Furthermore, the capillary tube **261'** enables the flexible membrane **264'** and air cavity **265'** to be arranged in a greater range of positions that are offset from the centrally located fluid channel **260'**, which can provide

a greater angle of incidence for the reflected light within the light transmissive member **254** (described in more detail below in connection with FIGS. **37-38**).

Similar to the previous embodiments described in connection with FIG. **27**, the cap device **130** has a multi-piece construction that provides a flow path from the medicine container **120**, through the fluid channel **260'**, and to the output port **139** (and then to the infusion set tubing **147**). The pressure of the medicine passing through the cap device **130** may be monitored by the optical sensor system **250** to determine if an occlusion exists downstream of the cap device **130** (e.g., if a kink or clog exists in the infusion set tubing **147** of cannula **149**). Similar to the previous embodiments described in connection with FIG. **27**, the cap device **130** may include a first component **136** that is movably engaged with a second component **137**. During attachment of the cap device **130** to the pump housing, the first component **136** can be rotated relative to the second component **137**, which causes the second component **137** to advance longitudinally toward the medicine cartridge **120**. In such circumstances, the needle penetrator **133** attached to the second component **137** can be advanced toward the septum **121** of the medicine cartridge **120** to pierce the septum and open a fluid flow path. The flow path for the medicine that is dispensed from the medicine cartridge **120** can pass through the needle penetrator **133**, through the fluid channel **260'**, and then to the infusion set tubing **147** for delivery to the user.

As shown in FIG. **34**, the fluid channel **260'** arranged in the cap device **130** is defined by one or more rigid side walls, and the capillary tube **261'** may extend in a transverse direction from the fluid channel **260'**. The capillary tube **261'** may have an orientation and size such that the medicine forced through the fluid channel **260'** (e.g., during an initial priming operation or the like) does not completely fill the capillary tube **261'**, but instead traps a pocket of air in the capillary tube **261'** as the medicine flows through the channel **260'** and to the infusion set tubing **147** (refer, for example, to FIGS. **35-36**). The flexible membrane **264'** is positioned against a terminal end of the capillary tube **261'** so that the air trapped in the capillary tube **261'** can apply a pressure to the membrane **264'**. An air cavity **265'** is disposed adjacent to the flexible membrane **264'** opposite to the pocket of air in the capillary tube **261'**, thus providing a volume into which the flexible membrane **264'** can expand as the pressure is applied to the flexible membrane **264'**. Similar to previously described embodiments, the flexible membrane **264** may comprise a flexible polymer material that bulges or otherwise deforms as the air pressure in the capillary tube **261'** rises (in response to a rise in the fluid pressure in the flow channel **260'**). As such, the flexible membrane **264'** can flex into the air cavity **265'** when the fluid pressure rises due to an occlusion in the flow path downstream of the fluid channel **260'**.

Referring now to FIGS. **35-36** (which show a closer view of the capillary tube **261'** and flexible membrane **264'** from FIG. **34**), a pocket of air **127** can be trapped in the capillary tube **261'** to separate the flexible membrane **264'** from the flow of medicine **126** through the fluid channel **260'**. For example, before the medicine **126** is initially dispensed through the fluid channel **260'** and to the infusion set tubing **147** (FIG. **34**), the fluid channel **260'** and the capillary tube **261'** may have air therein. When the pump device **100** (FIG. **1**) is activated to dispensing medicine **126** from the cartridge **120** (FIG. **34**) (e.g., during a priming operation or the like), the medicine **126** is delivered through the fluid channel **260'** along the flow path to the infusion set tubing **147** (FIG. **34**). When the medicine **126** is forced through the fluid channel **260'**, the pocket of air **127** can be trapped in the capillary tube **261'** so as to separate the medicine **126** in the flow path from the flexible membrane **264'**.

As shown in FIG. **35**, during normal operation, the medicine **126** can move along the flow path through the fluid channel **260'** and to the infusion set tubing **147** (FIG. **34**) for dispensation to the user. In such circumstances, the fluid pressure of the medicine **126** is maintained within a normal operating range because the infusion set tubing **147** (FIG. **34**) or other part of the flow path is not kinked, clogged, or otherwise occluded. Because the fluid pressure of the medicine **126** is within the normal operating range, the air pocket **127** in the capillary tube **261'** is also maintained within the normal operating range. Because the fluid pressure of the air pocket **127** in the capillary tube **261'** is below a particular level, the flexible membrane **264'** that is adjacent to the capillary tube **261'** is not substantially deformed (e.g., the membrane **264'** does not flex downwardly into the air cavity **265'** to abut the internal light transmissive member **254**). As previously described, the light from the light emitter **253** can be reflected at the interface where the internal light transmissive member **254** meets the air cavity **265'**.

As shown in FIG. **36**, when an occlusion exists in the flow path, the fluid pressure of the medicine **126** passing through the cap device **130** may rise to a level above the normal operating range. For example, if pump device **100** attempts to dispense another incremental dosage medicine when the infusion set tubing **147** (FIG. **34**) is clogged or kinked, the fluid pressure upstream of the occlusion (e.g., in the fluid channel **260'**) may be increased. In these circumstances, the air pocket **127** trapped in the capillary tube **261'** may be compressed due to the added pressure from the medicine **126**. The increased pressure in the air pocket **127** can cause the flexible membrane **264'** to be substantially deformed (e.g., the membrane **264'** will flex downwardly into the air cavity **265'** to abut the light transmissive member **254**.) Even though some portion of the medicine **126** may advance into the capillary tube **261'**, the air pocket **127** separates the flexible membrane **264'** from the flow path such that the flexible membrane **264'** does not contact the medicine **126**.

Still referring to FIGS. **35-36**, the capillary tube **261'** may have an orientation and size such that the medicine forced through the fluid channel **260'** (e.g., during an initial priming operation or the like) does not completely fill the capillary tube **261'**, thereby trapping the air pocket **127** therein. For example, in this embodiment, the capillary tube **261'** may extend generally perpendicularly from the longitudinal axis of the fluid channel **261**. Furthermore, the capillary tube **261'** may have a diameter at the opening that meets the fluid channel **260'** which is substantially small than the length of the capillary tube **261'**. In one example, the capillary tube **261'** may have a length-to-diameter ratio that is greater than about four, greater than about 6, greater than about 10, and preferably greater than about twelve. (Note that the capillary tube **261'** is not necessarily illustrated in proportion in FIG. **34**.) Accordingly, the medicine **126** forced through the fluid channel **260'** (e.g., during an initial priming operation or the like) does not advance to the flexible membrane '**264** but instead traps the air pocket **127** in the capillary tube **261**' as the medicine flows through the channel **260'** and to the infusion set tubing **147**

Referring now to FIGS. **37-38**, the capillary tube **261'** enables the flexible membrane **264'** and air cavity **265'** to be arranged in a position that is offset from the fluid channel **260'**, thereby providing a greater angle of incidence for the reflected light within the light transmissive member **254**. For

example, the embodiment depicted in FIGS. **37-38** illustrates that the flexible membrane **264'** and the air cavity **265'** are arranged close to the light emitter **253** and light sensor **258** (as compared to the embodiment depicted in FIGS. **32-33**). In such circumstances, the light from the light emitter **253** (as directed by surface **255**) approaches the interface between the light transmissive member **254** and the air cavity **265'** at a greater angle of incidence, thereby facilitating the phenomenon of total internal reflection (refer to FIG. **37**). As previously described, total internal reflection can occur in some circumstances when light passes through a first medium (e.g., the internal light transmissive member **254**) and strikes an interface between the first medium and a second medium (e.g., the air cavity **265**) at an angle of incidence greater than the critical angle. If the refractive index of the second medium (e.g., the air cavity **265**) is lower than refractive index of the first medium (e.g., the internal light transmissive member **254**), the light can undergo total internal reflection within the first medium.

Similar to embodiments previously described in connection with FIGS. **32-33**, the process of determining whether an occlusion exists can be implemented using the control circuitry **240** of the controller device **200**. In particular, the control circuitry **240** can be used to activate the light emitter **253** and the light sensor **258** at selected times to monitor the fluid pressure in the flow path. The control circuitry **240** can receive detector signals from the light sensor **258** and thereafter process the data to determine if an alarm should be triggered to notify the user of an occlusion.

As shown in FIG. **37**, when no substantial occlusion exists in the flow path, the fluid pressure of the medicine passing through the fluid channel **260'** may be within the normal operating range. In these circumstances, the flexible membrane **264'** that is adjacent to the capillary tube **261'** is not substantially deformed (e.g., the membrane **264'** does not flex downwardly into the air cavity **265'** to abut the internal light transmissive member **254**). As such, the light from the light emitter **253** can pass through the light transmissive member **254**, and then reflect at the interface where the internal light transmissive member **254** meets the air cavity **265**. This light reflection may occur due to total internal reflection at the interface. This reflected light continues through the internal light transmissive member **254** toward a second curved surface **257**, directs the light toward the light sensor **258**. As previously described, in some embodiments, the light sensor **258** may comprise an infrared photo detector that is capable of converting the receipt of infrared light into electrical signals. These electrical signals from the light sensor **258** can be transmitted via the sensor circuit **252** to the control circuitry **240**. The control circuitry **240** receives the signals from the light sensor **258** and uses this data to determine if an occlusion alarm should be provided to the user. In this example depicted in FIG. **37**, the control circuitry **240** receives signals that indicate the pressure in the fluid channel **260** is within the normal operating range, so the control circuitry would not trigger an alarm for the user.

As shown in FIG. **38**, when an occlusion exists in the flow path, the fluid pressure of the medicine passing through the cap device **130** may rise to a level above the the normal operating range. As such, the air pocket **127** (FIGS. **35-36**) in the capillary tube **261'** may act upon the flexible membrane **264'** to substantially deform it (e.g., the membrane **264'** will flex downwardly into the air cavity **265'** to abut the light transmissive member **254**.) As previously described, the interface where the light transmissive member **254** meets the flexible membrane **264'** provides different optical results than the previously described interface where the light transmissive member **254** meets the air cavity **265'** (FIG. **37**). In particular, the amount of light from the light emitter **253** that is internally reflected at the interface where the light transmissive member **254'** meets the flexible membrane **264'** is measurably less (as illustrated by the dotted lines in FIG. **38**).

The light that is not internally reflected at this interface may pass into the medium of flexible membrane **264'** and perhaps into the capillary tube '**261**. For example, the refractive index of the material of the flexible membrane **264'** can be substantially similar to that of the material of the light transmissive member **254**. As a result, the light being transmitted through the light transmissive member **254** can pass into the flexible membrane **264'** when the membrane **264'** flexes into the air cavity **265'** and contacts the flat surface of the light transmissive member **254**. The light from the light emitter **253** does not undergo total internal reflection at the portion where the flexible membrane **264'** interfaces with light transmissive member **254**, thereby resulting in reduced amount of light received by the light sensor **258**. If any portion of the light is internally reflected, this reduced portion of reflected light continues through the light transmissive member **254** toward a second curved surface **257** and then toward the light sensor **258**. Because the amount of light that is internally reflected in the light transmissive member **254** is measurably less, the light sensor **258** can produce detection signals that are different from those described in connection with FIG. **37**. These detection signals from the light sensor **258** can be transmitted via the sensor circuit **252** to the control circuitry **240**. The control circuitry **240** receives the signals from the light sensor **258** and uses this data to determine if an occlusion alarm should be provided to the user. For example, the control circuitry **240** may include the previously described detection software module and the previously described alarm trigger module stored in one or more memory devices (e.g., on the main processor board **242**). In this example depicted in FIG. **38**, the detection signals may indicate that the fluid pressure in the cap device **130** has risen above the normal operating range due to a downstream occlusion.

In alternative embodiments, the occlusion sensor may include a system other than the optical sensor system **250** described in connection with FIGS. **26-33** and **34-38**. For example, the occlusion sensor may comprise a force transducer arranged on the piston rod **370** (FIGS. **22-25**) so as to detect changes in the fluid pressure in the medicine cartridge. In such embodiments, the controller device **200** may be configured to receive the signals from the force transducer to determine if an occlusion alarm should be provided to the user. For example, the force transducer signals can be input to the detection software module stored in one or more memory devices (e.g., on the main processor board **242**).

In another example, the cap device **130** may house at least a portion of an occlusion sensor that is configured to detect the flow of medicine through the cap device **130** or to detect an occlusion in the fluid path. Such an occlusion sensor housed at least partially in the cap device **130** may include a pair of electrodes surfaces that are arranged to detect fluid flow through the cap device **130**. For example, an AC current may be passed through the fluid between the two electrodes, and the electrodes can be configured to sense the electrical admittance (e.g., the inverse of the electrical impedance) through the fluid in the bypass fluid path **166**. The electrical admittance sensed using the electrodes can be correlated to a fluid velocity (e.g., a change in the flow speed causes a change in the electrical admittance). In such embodiments,

the controller device **200** may be programmed to correlate the fluid velocity from the electrical admittance sensed using the electrodes.

It should be understood from the description herein that, in alternative embodiments, other types of occlusion sensors can operate within the cap device **130** to detect flow (or nonflow) of the medicine. For example, the occlusion sensor housed at least partially in the cap device may include a pressure sensor that indicates the fluid pressure in the cap device **130**. For example, a miniature pressure transducer can be arranged in the cap device **130** to detect the fluid pressure. In some cases, the miniature pressure transducer can be formed as a MEMS (Micro-ElectroMechanical System) device. The miniature pressure transducer may be output an electrical signal that can be correlated to a fluid pressure value. In such embodiments, the controller device **200** may be programmed to correlate the fluid pressure from the signal output by the pressure transducer. In another example, the occlusion sensor may include a first probe and a second probe arranged in the cap device **130**—the first probe being used to induce a small oxygen (O_2) concentration into the fluid flow, and the second probe being used to detect the oxygen level in the fluid flow. If the second probe detects an oxygen concentration greater than a threshold level, the fluid flow may be occluded or partially occluded. As such, the controller device **200** may communicate an alarm to the user that an occlusion exists in the fluid path.

A number of embodiments of the invention have been described. Nevertheless, it will be understood that various modifications may be made without departing from the spirit and scope of the invention. Accordingly, other embodiments are within the scope of the following claims.

What is claimed is:

1. A multiple-component infusion pump system, comprising:

a medicine cartridge filled with a medicine and having a septum at an output end of the medicine cartridge and a plunger at an opposite end of the medicine cartridge;

a pump device including a pump housing that defines a cavity adapted to receive and surround the medicine cartridge, the pump housing further encasing a piston rod adapted to advance the plunger of the medicine cartridge when the medicine cartridge is received in the cavity;

a controller device including a controller housing releasably mateable with the pump housing so as to removably mount the controller device to the pump device in a fixed relationship, the controller housing enclosing at least a portion of a control circuitry; and

a cap device having a needle penetrator, the cap device releasably mateable with the pump housing such that the cap device can be joined with the pump housing when the medicine cartridge is inserted in the cavity;

wherein the needle penetrator is adapted to be advanced towards and through the septum of the medicine cartridge when the medicine cartridge is received in the cavity and the pump housing and the cap device are joined together;

wherein the cap device further comprises an output port configured to connect with tubing for dispensation of the medicine to a patient;

wherein the cap device further comprises one or more alignment tabs configured to align with adjacent surfaces of the controller housing to provide a selected orientation of the output port during operation of the infusion pump system;

wherein the selected orientation of the cap device with respect to the controller housing is an orientation in which an occlusion sensor of the controller housing aligns with a portion of a fluid flow path of the infusion pump system.

2. The system of claim **1**, wherein the occlusion sensor comprises an optical sensor system configured to detect an amount of light reflected from a portion of the cap device.

3. A multiple-component infusion pump system, comprising:

a medicine cartridge filled with a medicine and having a septum at an output end of the medicine cartridge and a plunger at an opposite end of the medicine cartridge;

a pump device including a pump housing that defines a cavity adapted to receive the medicine cartridge and a piston rod adapted to advance the plunger of the medicine cartridge when the medicine cartridge is received in the cavity;

a controller device including a controller housing releasably mateable with the pump housing so as to removably mount the controller device to the pump device in a fixed relationship, the controller housing enclosing at least a portion of a control circuitry, wherein the controller device further comprises an optical sensor system configured to detect an amount of light reflected from a portion of a cap device, the cap device releasably mateable with the pump housing such that the cap device can be joined with the pump housing when the medicine cartridge is inserted in the cavity; and

a needle penetrator adapted to be advanced towards and through the septum of the medicine cartridge when the medicine cartridge is received in the cavity and the pump housing and the cap device are joined together, wherein the needle penetrator is part of the cap device.

4. The system of claim **3**, wherein an occlusion sensor of the cap device comprises a pair of electrodes arranged to detect a fluid flow through the cap device.

5. The system of claim **3**, wherein the cap device further comprises an occlusion sensor configured to detect an occlusion in a fluid path of the infusion pump system when the pump housing and the cap device are joined together.

6. The system of claim **3**, wherein the pump device further comprises a first electrical connector, wherein the first electrical connector of the pump device mates with a second electrical connector of the controller device when the controller device removably mounts to the pump device.

7. A multiple-component infusion pump system, comprising:

a medicine cartridge filled with a medicine and having a septum at an output end of the medicine cartridge and a plunger at an opposite end of the medicine cartridge;

a pump device including a pump housing that defines a cavity adapted to receive and surround the medicine cartridge, the pump housing further encasing a piston rod adapted to advance the plunger of the medicine cartridge when the medicine cartridge is received in the cavity;

a controller device including a controller housing releasably mateable with the pump housing so as to removably mount the controller device to the pump device in a fixed relationship, the controller housing enclosing at least a portion of a control circuitry;

a needle penetrator adapted to be advanced towards and through the septum of the medicine cartridge when the medicine cartridge is received in the cavity and the pump housing and the needle penetrator are joined together; and

a release member that is movably mounted to one of the pump housing and the controller housing and that is spring biased toward a locking position, the release member being movable away from the other of the pump housing and the controller housing prior to detaching the controller device and the pump device from one another, the release member being movable from the locking position in which the controller device and the pump device are retained together to a second position in which the controller device and the pump device are detachable from one another.

8. The system of claim **7**, wherein the needle penetrator is part of a cap device, the cap device releasably mateable with the pump housing such that the cap device can be joined with the pump housing when the medicine cartridge is inserted in the cavity.

9. The system of claim **8**, wherein the cap device further comprises one or more alignment tabs configured to align the cap device with the pump housing in a selected orientation when the cap device is joined with the pump housing.

10. The system of claim **8**, wherein the cap device further comprises an output port configured to connect with tubing for dispensation of the medicine to a patient.

11. The system of claim **10**, wherein the cap device further comprises one or more alignment tabs configured to align with adjacent surfaces of the controller housing to provide a selected orientation of the output port during operation of the infusion pump system.

12. The system of claim **7**, wherein the release member is spring biased to move to the locking position to engage a mating structure of the other of the pump housing and the controller housing in response to the controller housing mating with the pump housing.

13. The system of claim **7**, wherein a first electrical connector of the pump device mates with a second electrical connector of the controller device when the release member is in the locking position to retain the controller device and the pump device together.

* * * * *