US009990662B2

(12) **United States Patent**
Couch et al.

(10) **Patent No.: US 9,990,662 B2**
(45) **Date of Patent: *Jun. 5, 2018**

(54) **COMPUTER-BASED TECHNOLOGY FOR AIDING THE REPAIR OF MOTOR VEHICLES**

(71) Applicant: **Manheim Investments, Inc.**, Las Vegas, NV (US)

(72) Inventors: **William Henry Couch**, Nashville, TN (US); **Julie Elizabeth Warpool**, Nashville, TN (US); **Mark Humble**, Nashville, TN (US); **Marc Haegelin**, Nashville, TN (US); **Stephen Krise**, Nashville, TN (US); **Michael Chastain**, Nashville, TN (US); **Ronald St. Denis**, Nashville, TN (US); **Terry Mitchell**, Nashville, TN (US)

(73) Assignee: **Manheim Investments, Inc.**, Las Vegas, NV (US)

(*) Notice: Subject to any disclaimer, the term of this patent is extended or adjusted under 35 U.S.C. 154(b) by 435 days.

This patent is subject to a terminal disclaimer.

(21) Appl. No.: **14/868,956**

(22) Filed: **Sep. 29, 2015**

(65) **Prior Publication Data**

US 2016/0019616 A1 Jan. 21, 2016

Related U.S. Application Data

(60) Division of application No. 13/460,292, filed on Apr. 30, 2012, now Pat. No. 9,189,960, which is a (Continued)

(51) **Int. Cl.**
G06Q 30/06 (2012.01)
G06Q 10/00 (2012.01)
(Continued)

(52) **U.S. Cl.**
CPC ... ***G06Q 30/0613*** (2013.01); ***G06Q 10/06313*** (2013.01); ***G06Q 10/20*** (2013.01); ***G08G 1/168*** (2013.01)

(58) **Field of Classification Search**
CPC G06Q 10/20; G06Q 30/0613
(Continued)

(56) **References Cited**

U.S. PATENT DOCUMENTS

4,899,292 A 2/1990 Montagna et al.
5,272,769 A 12/1993 Strnatka et al.
(Continued)

FOREIGN PATENT DOCUMENTS

JP 2003-58653 A 2/2003
JP 2005-107722 A 4/2005
(Continued)

OTHER PUBLICATIONS

Burroughs, John, "How to Fix Those Dents in Your Car," Popular Science, pp. 138-141 (Mar. 1967).
(Continued)

Primary Examiner — Daeho D Song
(74) *Attorney, Agent, or Firm* — Nixon & Vanderhye P.C.

(57) **ABSTRACT**

A computer-assisted inspection system provides computer architectures and software controlled algorithms to automatically provide vehicle inspections and repair recommendations including estimated repair time and cost of depression type damage such as dents. Features provided by a handheld wireless touchscreen based inspection device include flat car part picking, auto grading including seller grading, and automatic calculation of body and bumper dent repair parameters and directions.

1 Claim, 31 Drawing Sheets

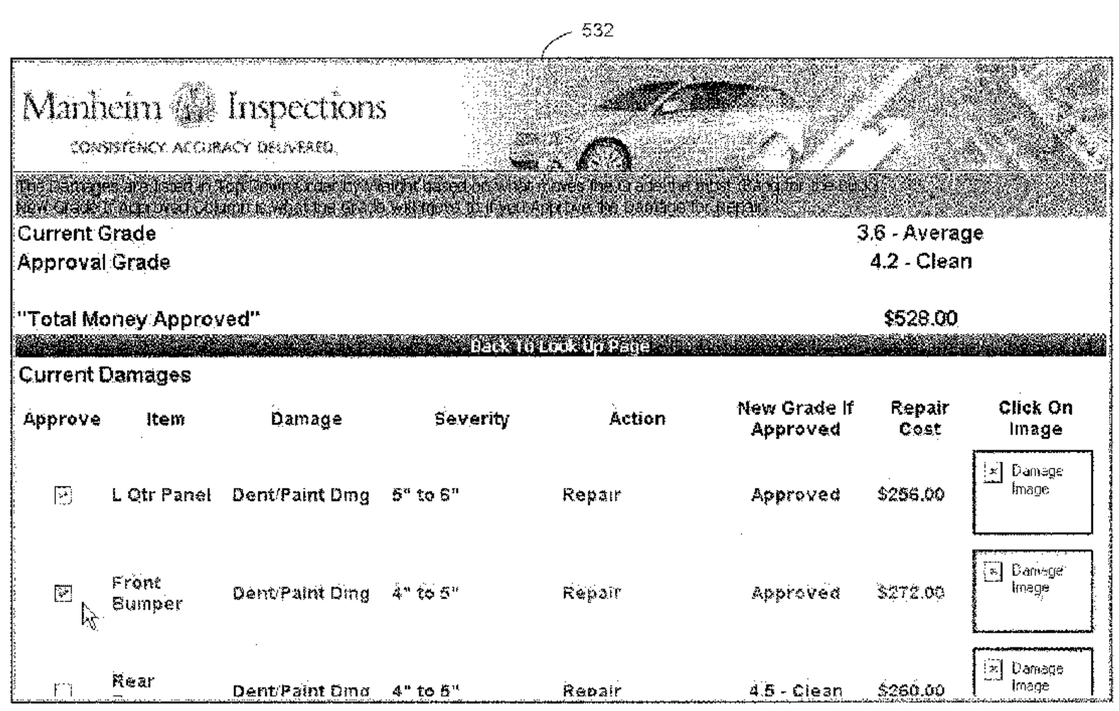

Related U.S. Application Data

continuation-in-part of application No. 11/421,320, filed on May 31, 2006, now Pat. No. 8,230,362.

(60) Provisional application No. 61/480,086, filed on Apr. 28, 2011.

(51) **Int. Cl.**
G06Q 10/06 (2012.01)
G08G 1/16 (2006.01)

(58) **Field of Classification Search**
USPC 705/305
See application file for complete search history.

(56) **References Cited**

U.S. PATENT DOCUMENTS

5,317,503 A 5/1994 Inoue
5,442,549 A 8/1995 Larson
5,758,300 A 5/1998 Abe
5,884,202 A 3/1999 Arjomand
6,052,631 A 4/2000 Busch et al.
6,094,609 A 7/2000 Arjomand
6,185,540 B1 2/2001 Schreitmueller et al.
6,397,131 B1 5/2002 Busch et al.
6,408,232 B1 * 6/2002 Cannon G08G 1/017 123/493
6,470,303 B2 10/2002 Kidd et al.
6,529,808 B1 3/2003 Diem
6,553,291 B2 * 4/2003 Matsui G01M 17/007 342/357.4
6,587,768 B2 * 7/2003 Chene G07C 5/006 701/33.2
6,611,740 B2 * 8/2003 Lowrey G01M 15/04 379/1.01
6,636,790 B1 * 10/2003 Lightner G01M 15/102 701/31.4
6,732,031 B1 5/2004 Lightner et al.
6,775,602 B2 8/2004 Gordon et al.
6,836,708 B2 12/2004 Tripathi
6,885,981 B2 4/2005 Bomar et al.
6,917,595 B2 7/2005 Chang et al.
6,941,203 B2 9/2005 Chen
6,965,324 B1 11/2005 Suggs, Sr.
7,020,580 B2 3/2006 Peters et al.
7,124,058 B2 10/2006 Namaky et al.
7,194,369 B2 * 3/2007 Lundstedt G01N 21/274 702/104
7,197,444 B2 3/2007 Bomar et al.
7,209,817 B2 4/2007 Abdel-Malek et al.
7,228,211 B1 * 6/2007 Lowrey G07C 5/008 701/31.5
7,228,298 B1 6/2007 Raines
7,257,426 B1 * 8/2007 Witkowski G07C 5/008 455/41.2
7,269,416 B2 * 9/2007 Guthrie G07C 9/00182 340/12.5
7,359,821 B1 4/2008 Smith et al.
7,469,171 B2 12/2008 Tefft et al.
7,630,802 B2 * 12/2009 Breed G06K 7/10178 701/31.6
7,693,896 B1 4/2010 Raines
7,812,739 B2 * 10/2010 Chuey G08C 17/02 340/12.5
7,944,345 B2 * 5/2011 Brinton G08G 1/20 235/380
2002/0013685 A1 1/2002 Kidd et al.
2003/0130966 A1 7/2003 Thompson et al.
2003/0200151 A1 10/2003 Ellenson et al.
2004/0015278 A1 1/2004 Gordon et al.
2004/0073434 A1 4/2004 Volquardsen et al.
2004/0111301 A1 6/2004 Wahlbin et al.
2004/0117081 A1 6/2004 Mori
2004/0117131 A1 6/2004 Peters et al.
2004/0227523 A1 11/2004 Namaky
2004/0243423 A1 12/2004 Rix et al.
2005/0043868 A1 2/2005 Mitcham
2005/0060179 A1 3/2005 Tinberg et al.
2005/0108112 A1 5/2005 Ellenson et al.
2005/0182537 A1 8/2005 Tefft et al.
2005/0267707 A1 12/2005 Mian et al.
2005/0283285 A1 12/2005 Ying
2006/0031041 A1 2/2006 Afshar et al.
2006/0061464 A1 3/2006 Okada et al.
2006/0064393 A1 3/2006 Orr
2006/0074790 A1 4/2006 Anspach
2006/0114531 A1 6/2006 Webb et al.
2006/0132291 A1 6/2006 Dourney et al.
2006/0182055 A1 8/2006 Coffee et al.
2006/0255968 A1 11/2006 Woo et al.
2007/0055420 A1 3/2007 Krzystofczyk et al.
2007/0067075 A1 3/2007 McMillan et al.
2007/0156311 A1 7/2007 Elcock et al.
2007/0250232 A1 10/2007 Dourney et al.
2008/0082221 A1 4/2008 Nagy
2008/0154671 A1 6/2008 Delk
2008/0281658 A1 11/2008 Seissman

FOREIGN PATENT DOCUMENTS

JP 2005-321971 A 11/2005
JP 2006-91951 A 4/2006

OTHER PUBLICATIONS

Duffy, James E. et al., Auto Body Repair Technology, 4th Edition, Thomson Delmar Learning, Chapter 10 "Estimating Repair Costs" and Chapter 11 "Working Sheet Metal," pp. 262-287 and 307 (2004).
Fried, Jason, "Henrik Fisker: A Three-Part Interview with a Master Car Designer" (Apr. 19, 2007).
Gardner, Andrew, "Henrik Fisker on Aston Martin, Ford, and General Automotive Design: Part 1" (Jan. 15, 2005).
Halberstam, David, "An American Romance," Popular Mechanics, pp. 49, 50, 52, 54, 56 (May 1989).
Meredith, Mike, Paintless Dent Repair, "Skilled Technicians Remove Dents without Repainting," MSN Autos (2012).
International Search Report and Written Opinion, International Application No. PCT/US07/12834, dated Jul. 3, 2008.
Buildfolio Real Estate/Construction Mobile Inspection Station, "The Buildfolio Solution," website information http://web.archive.org (Jan. 16, 2004).
FedBizOpps, Section: Special Notice, Notice of GSA's intent to enter into a sole source licensing agreement with Auto Auction Services Corp. (Aug. 16, 2007).
NYVIP Vehicle Inspection System Operators Manual; Yoyodyne, Inc; http://www.nyvip.us/pdf/NY-VIP_Operators_Manual_2_2_Final06.pdf (Nov. 19, 2004).
On-Board Diagnostics II (OBDII) and Light-Duty Vehicle Emission Related Inspection and Maintenance (I/M) Programs; D. Cope Enterprises; http://www.ccme.ca/assets/pdf/jia_trnsprt_obd_e.pdf (Apr. 2002).
Pen Computer Solutions, Inc. Mobile Data Collection, PDS Software Programming and Development, Palm and Pocket PC Custom Software Programming and Development Services, Windows Mobile and Handheld/Smartpone Developers and Programmers, Sample Customized Palm OS Application for Vehicle Inspection, Pen Computer Solutions, Inc., Las Vegas, NV, 6 pages (2005).
Polk & Associates LLC, "Pre-purchase Inspections," website information, 3 pages (2003).
SubPrime Auto Finance News, "AutoIMS Introduces Latest Version of Condition Report Writing Tool," Atlanta, GA (Jun. 7, 2007).
Vehicle Remarketing Magazine, "AutoIMS Leverages Collective Intelligence in Latest Version of Condition Report Writing Tool," Atlanta, GA (Apr. 25, 2007).
Ashley, Charles, "Insurers Ought to be in Still Pictures," Best's Review/Life-Health Insurance, vol. 95, Issue 6, 2 pages. (Oct. 1994).

(56) **References Cited**

OTHER PUBLICATIONS

Beltran, John L., "Auto Appraisals, Shifting into High Gear," Best's Review, pp. 49-52 (1992).
Dickson, Paul et al., "Mosaic Generation for Under Vehicle Inspection," Proceedings of the Sixth IEEEE Workshop on Applications of Compute Vision (WACV '02), pp. 251-256 (2002).
Gramopadhye, A. et al., "The Use of Advance Technology for Visual inspection Training," Applied Ergonomics, vol. 29, No. 5, pp. 361-375 (Oct. 1998).
Greene, Richard, "Appraisal Product Piloted, Ready for Nationwide Rollout," Auto Remarketing Newsmagazine, Auto Remarketing.com, 3 pages (Apr. 28, 2006).
May, Andrew et al., "Opportunities and Challenges for Location Aware Computing in the Construction Industry," Mobile HCI '05 pp. 255-258 (Sep. 2002).
Smailagic, Asim et al., "User-Centered Interdisciplinary Design of Wearable Computers," Mobile Computing and Communications Review, vol. 3, No. 3, pp. 43-52 (Jul. 1999).
Tolinski, Michael, "Hands-Off inspection," Manufacturing Engineering, pp. 117-130 (2005).
Vora, Jeenal et al., "Using Virtual Reality Technology for Aircraft Visual Inspection Training: Presence and Comparison Studies," Applied Ergonomics, vol. 33, pp. 559-570 (2002).

* cited by examiner

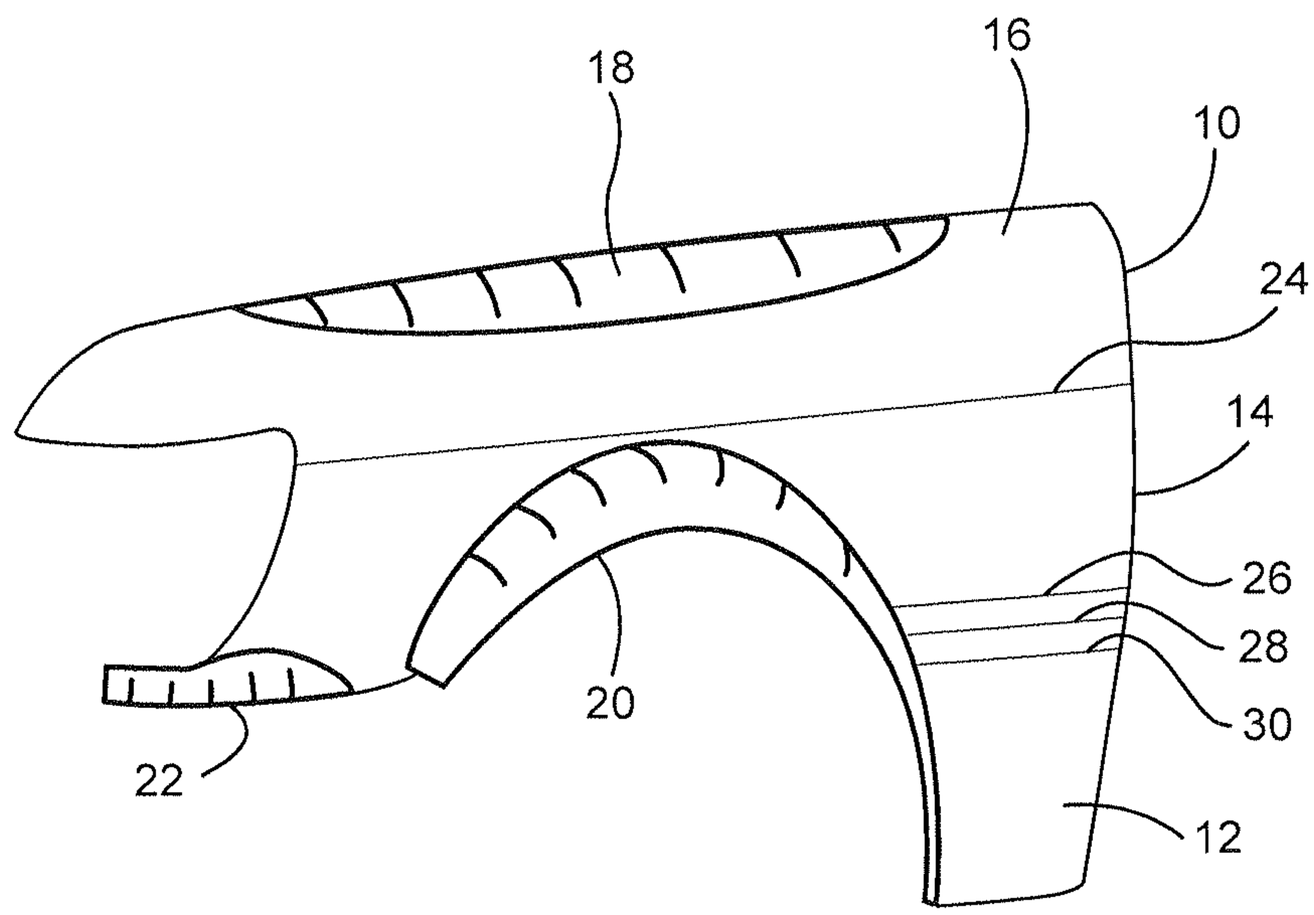

FIG. 1
(Prior Art)

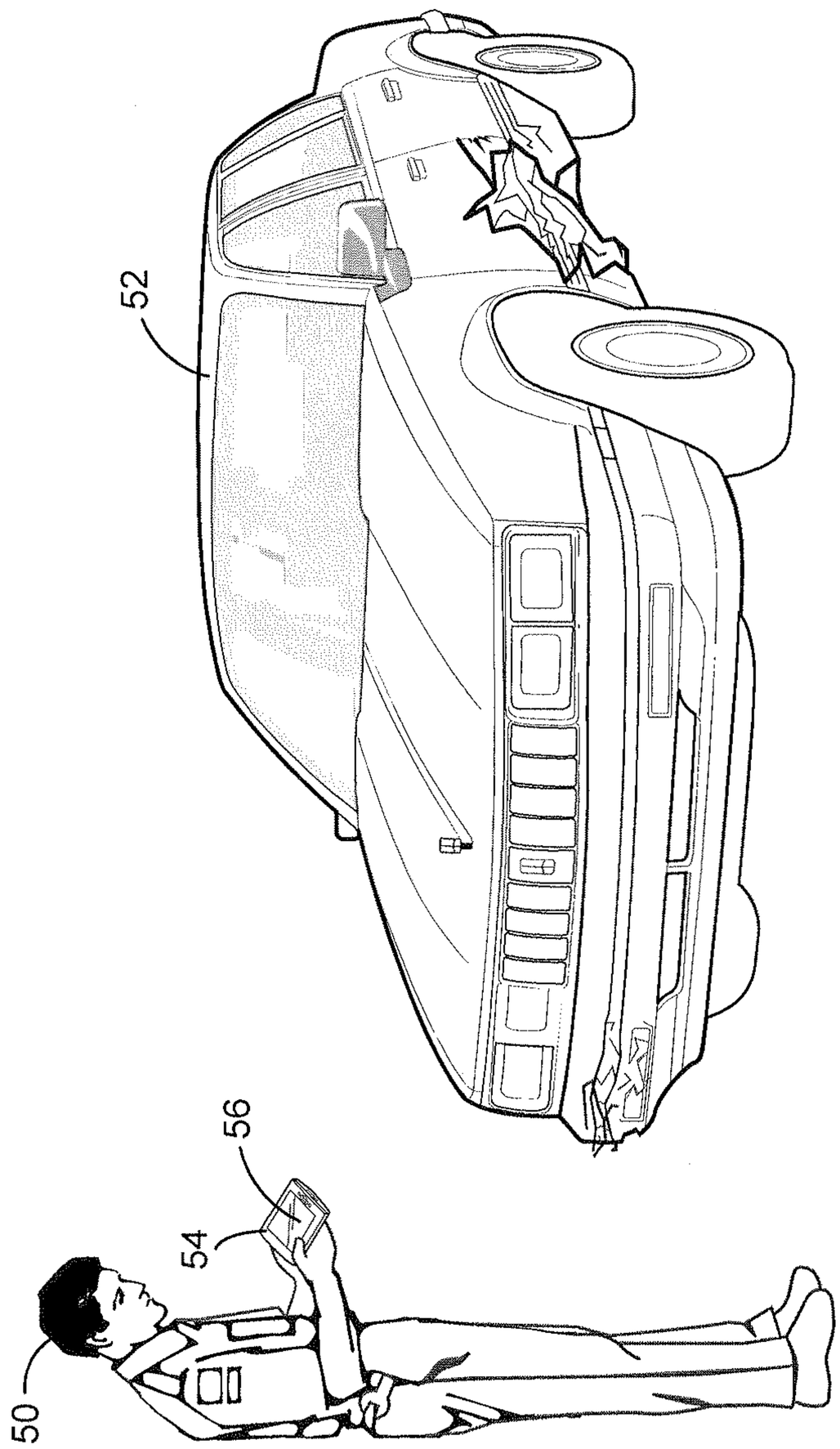

FIG. 1A

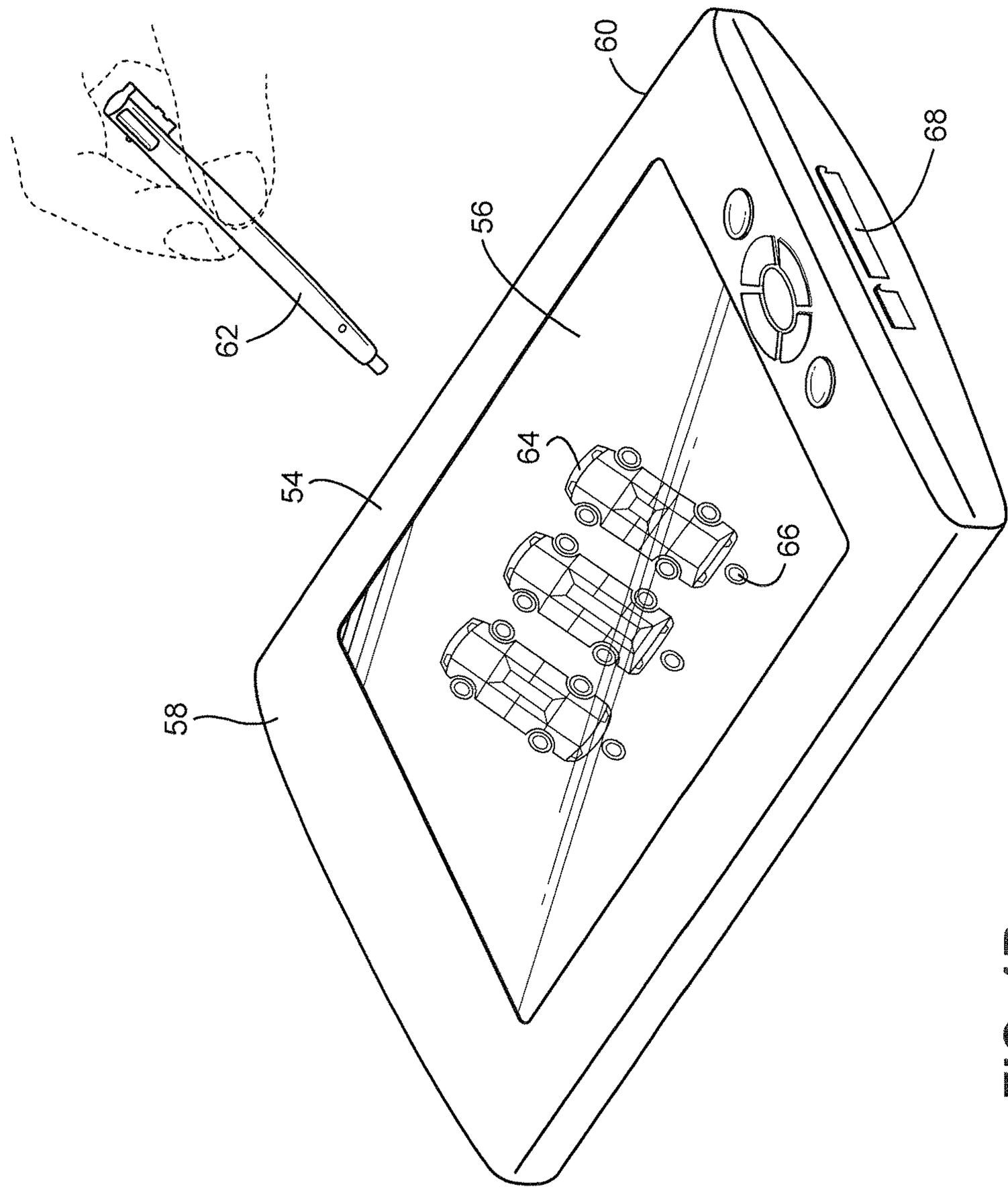

FIG. 1B

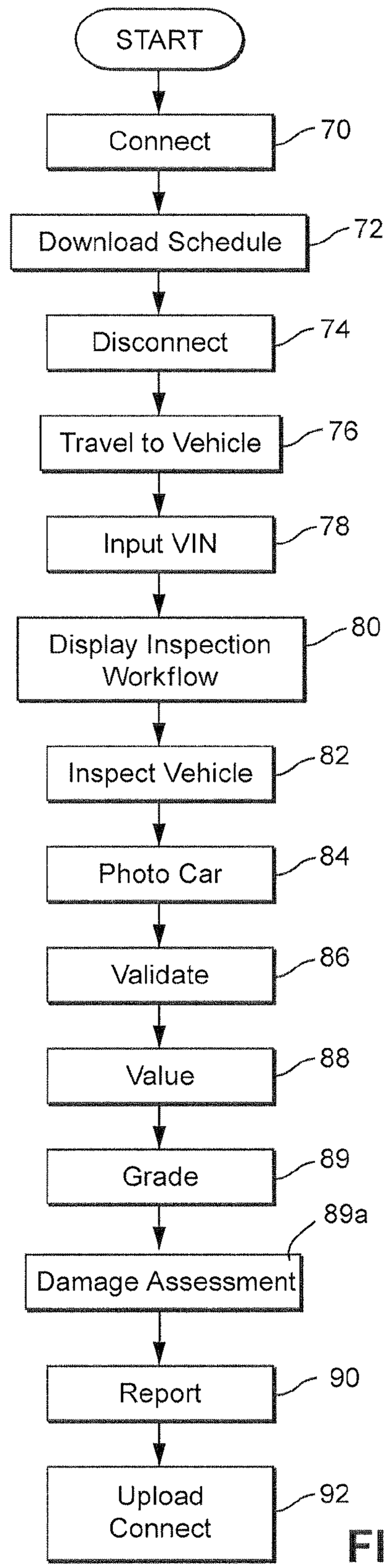
START
Connect
70
Download Schedule
72
Disconnect
74
Travel to Vehicle
76
Input VIN
78
Display Inspection Workflow
80
Inspect Vehicle
82
Photo Car
84
Validate
86
Value
88
Grade
89
89a
Damage Assessment
Report
90
Upload Connect
92

FIG. 1C

Vehicle Condition Report
Inspection Date: 2/14/2003
Control Number: 200302100001

VEHICLE INFORMATION

VIN:	SALPV1111XA111111	**Year:**	1999
Make:	Range Rover	**Model:**	4.6hse 4x4
Exterior Color:	Silver		
Paint Type:			
Interior Color/Type:	Black, Leather		
Engine Cylinders:	8	**Engine Type:**	Gas
Body:	4 Door SUV	**Engine Liter:**	4.6
Radio:	Compact Disc Player	**Premium Radio:**	
Wheel Type:	Aluminum		
Transmission:	Automatic with Overdrive		
Odometer Type:	ODTPC 6 - Digital	**Mileage:**	56117

INSPECTION INFORMATION

Inspector:	barmour		
Inspector Type:	ASSIGNMENT		
Tag Number:	none	**Tag State:**	CA

CONVENIENCE AND EQUIPMENT OPTIONS

<

Power Antenna	✓Power Trunk Lift Gate	✓Power Door Locks	✓Power Windows	✓Power Mirrors
Power Passenger Seat	✓Power Seat			
✓AC	Bed Liner	✓Cruise Control	Fog Lamps	Heated Mirror
Radar Detector	✓Security System	Special Wheel Covers	Telescopic Steering Wheel	Trip Computer
Wheel Locks	After Market Rim	Bug Deflector	Drivers Air Bag	✓Four Wheel Drive
✓Heated Seats	✓Rear Defogger	✓Tilt Steering Wheel	✓Trip Counter	Special Wheels
Air Scoop	Camper Shell	Dual AC	Gold Package	Video Player
✓Keyless Entry	✓Rear Wiper	Skid Plate	Spoiler	✓Tinted Windows
Two Wheel Drive	Auto Level Suspension	Cell Phone	✓Dual Air Bag	Grille Guard
Light Bar	Roll Bar	Sliding Rear Glass	Step Bumper	Traction Control
VCR	Auxiliary Fuel Tank	Chrome Bed Rails	Fifth Wheel	Ground Effects
✓Luggage Rack	Running Boards	Special Paint & Trim	Sunroof Wind Deflector	✓Trailering Package

EXTERIOR/INTERIOR DAMAGE LIST

System/Component	Damage Type	Severity	Location
ABS Light:	Illuminated	Check and Advise	Interior

FIG. 1C-1

Coolant:	Low Level	Check and Advise	Exterior
Glove Box Door:	Mis-aligned	Other Severity	Interior
Front Bumper Cover:	Scuffed	Colorsand	Front
Mirror Outside Right:	Scratched	2" to 3"	Front-right

TIRES

	Section Width	Aspect Ratio	Type	Rim Diameter	Tread Depth	Manufacturer
Example:	*225*	*50*	*R*	*16*	*8/32*	*Goodyear*
Left Front:	225	70	R	16	5/32	Cooper
Right Front:	225	70	R	16	5/32	Cooper
Left Rear:	225	70	R	16	5/32	Cooper
Right Rear:	225	70	R	16	5/32	Cooper
Spare:	255	65	R	16	7/32	OTHER

COMMENTS

low coolant loose wire in main loom glove box loose abs light on drive belt cracked hoses appear to be original tire size not manuf specs

Although a professional inspection performed by a trained, certified vehicle inspector can be of significant value, an inspection is not a guarantee that the vehicle is free from defects or that the inspector has identified all existing flaws. A vehicle inspection is not a safety or title inspection, a warranty, or an insurance policy. Our inspection services are provided "as is", and "with all flaws". We disclaim all warranties, express and implied, regarding our inspection services, including our inspection reports, disclaim all liability for indirect, consequential, incidental, special, and punitive damages, and limit our liability to the amount paid in connection with this inspection.

INSPECTION REPORT LINK

To display a link to your Inspection Report within your web listing, do the following:

1) Click the "Select all in Textbox" button.

Select All in Textbox

```
<!--Link provided courtesy of Inspection Solution
(http://www.inspectionsolution.com)-->
http://www.inspectionsolution.com/ConditionReport/displayCR.asp?
ctrl=200302100001&crUrldisplayCR.asp
```

2) Click the right mouse button on the highlighted text and select Copy.

3) Open your web listing in a new browser window.

4) Find the area in which you want to paste the link.

5) Click Edit, Paste

PICTURES

FIG. 1C-2

FIG. 1C-3

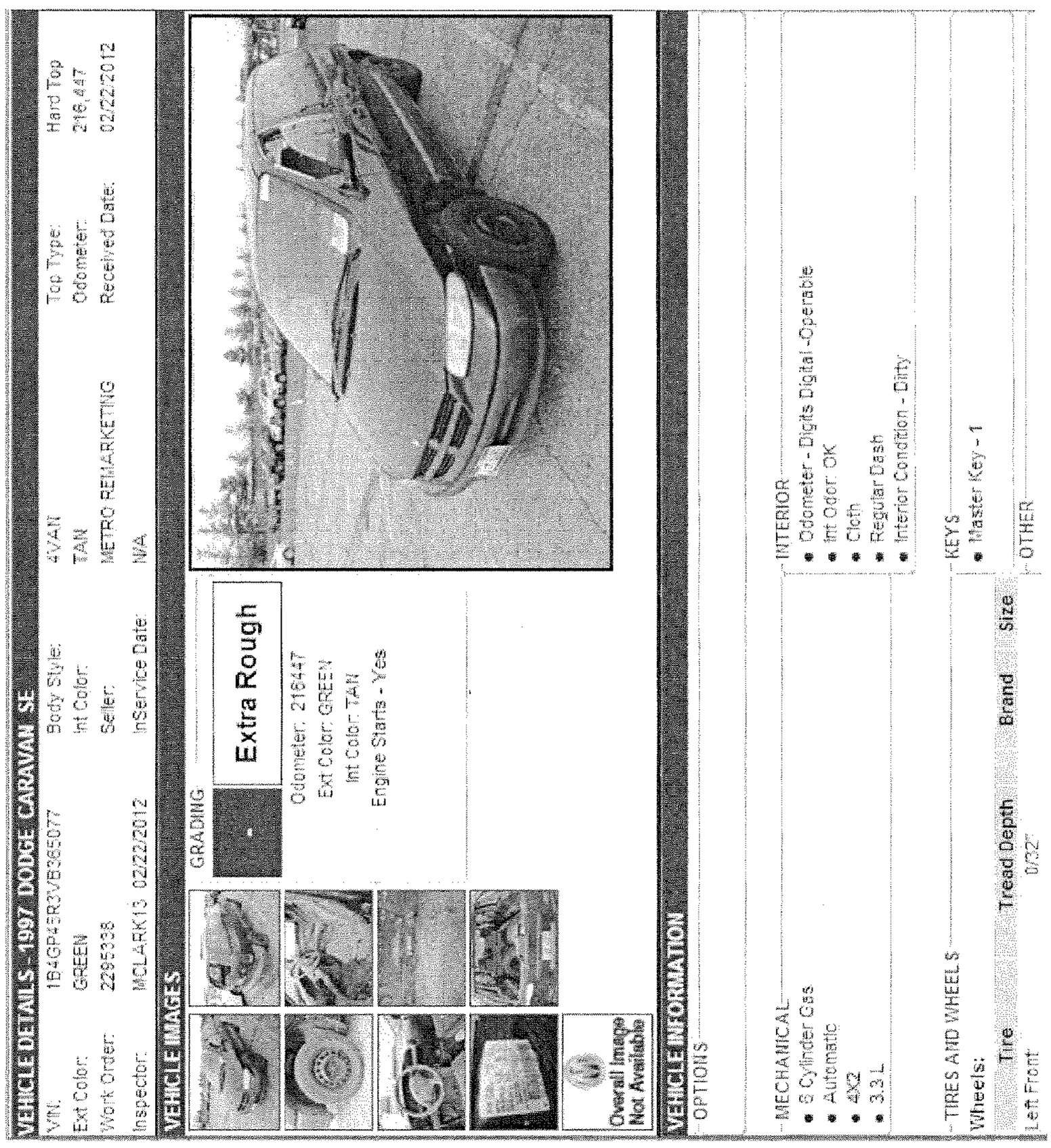
VEHICLE DETAILS-1997 DODGE CARAVAN SE
VIN: 1B4GP45R3VB365077
Ext Color: GREEN
Work Order: 2295338
Inspector: MCLARK13 02/22/2012
Body Style: 4VAN
Int Color: TAN
Seller: METRO REMARKETING
InService Date: N/A
Top Type: Hard Top
Odometer: 216,447
Received Date: 02/22/2012
VEHICLE IMAGES
GRADING
Extra Rough
Odometer: 216447
Ext Color: GREEN
Int Color: TAN
Engine Starts - Yes
Overall Image Not Available
VEHICLE INFORMATION
OPTIONS
MECHANICAL
8 Cylinder Gas
Automatic
4X2
3.3 L
INTERIOR
Odometer - Digits Digital -Operable
Int Odor: OK
Cloth
Regular Dash
Interior Condition - Dirty
TIRES AND WHEELS
Wheels:
Tire
Tread Depth
Brand
Size
Left Front
0/32"
KEYS
Master Key - 1
OTHER

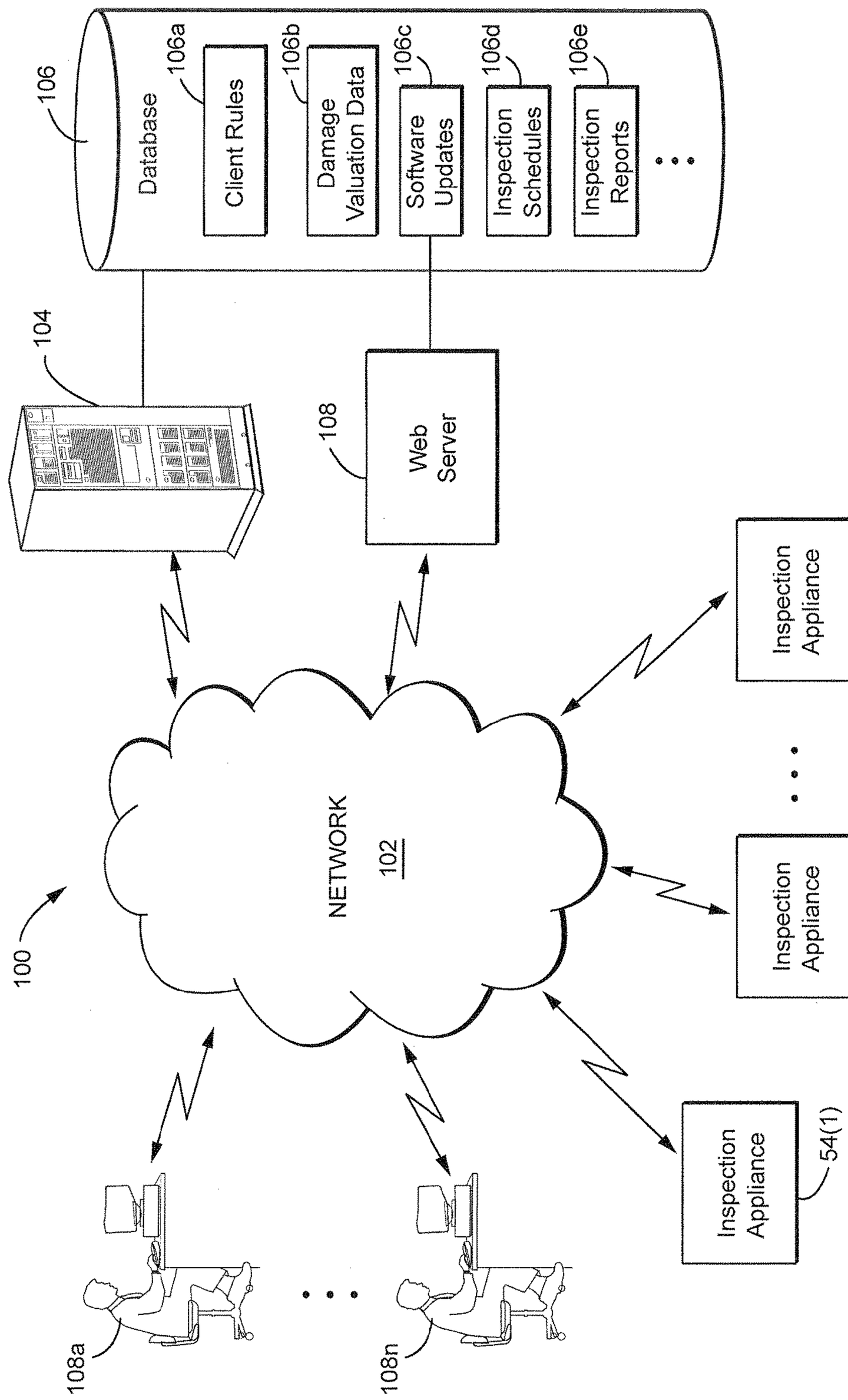
106
Database
106a
Client Rules
106b
Damage Valuation Data
106c
Software Updates
106d
Inspection Schedules
106e
Inspection Reports
104
108
Web Server
100
NETWORK
102
Inspection Appliance
54(n)
Inspection Appliance
54(2)
Inspection Appliance
54(1)
108a
108n

FIG. 2

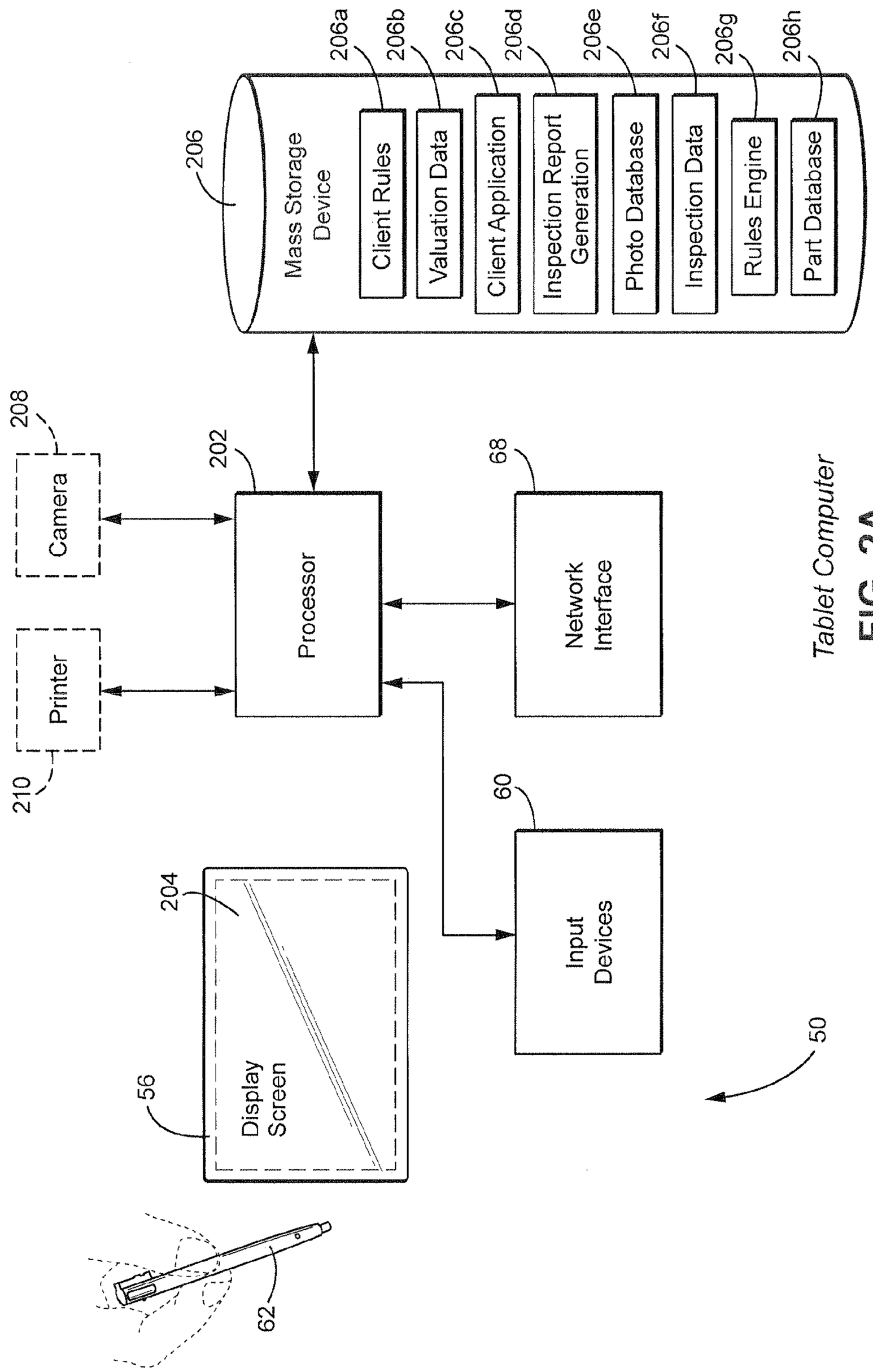

Tablet Computer

FIG. 2A

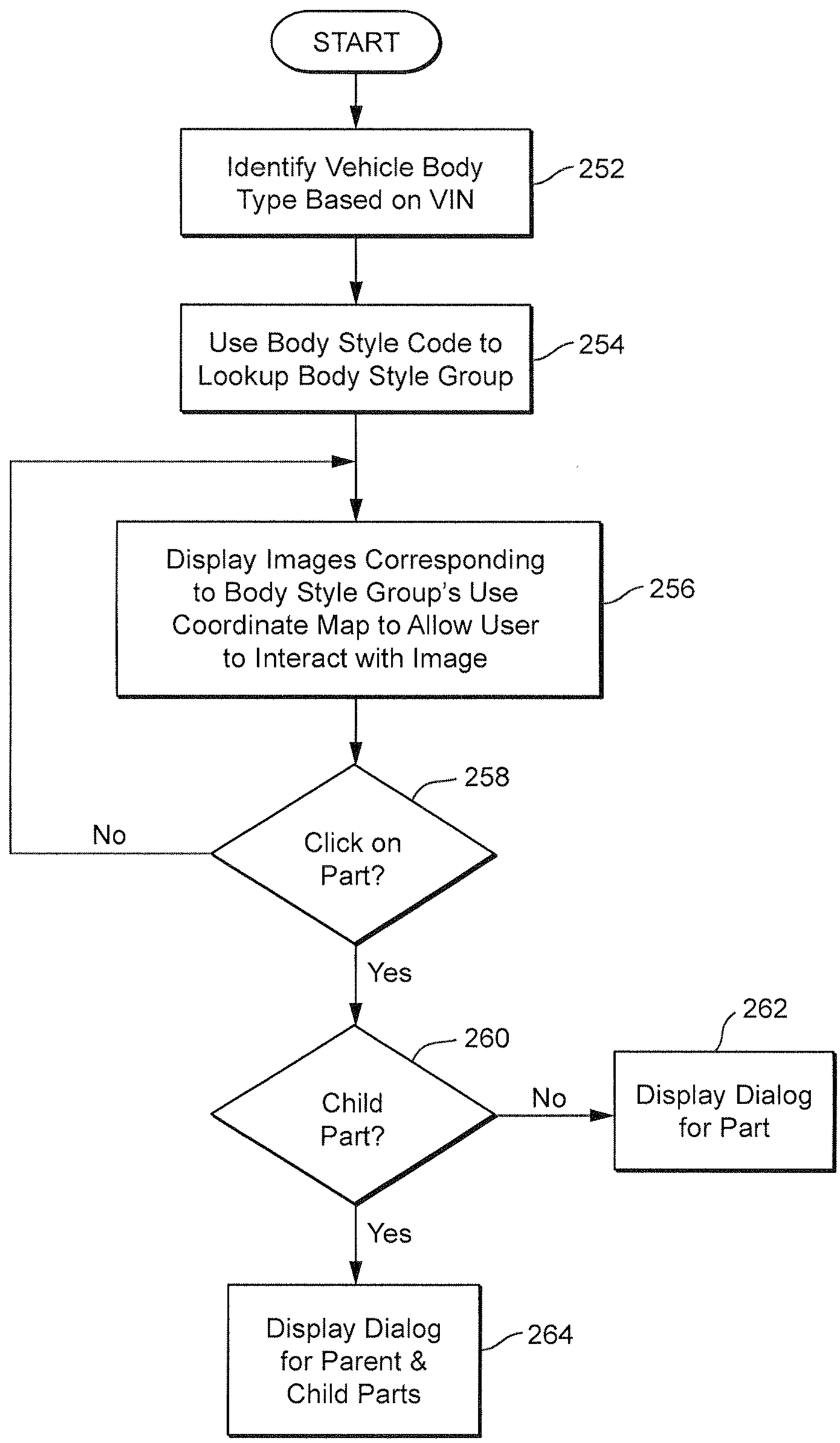
START
Identify Vehicle Body Type Based on VIN
252
Use Body Style Code to Lookup Body Style Group
254
Display Images Corresponding to Body Style Group's Use Coordinate Map to Allow User to Interact with Image
256
258
Click on Part?
No
Yes
260
Child Part?
No
262
Display Dialog for Part
Yes
Display Dialog for Parent & Child Parts
264

FIG. 2B

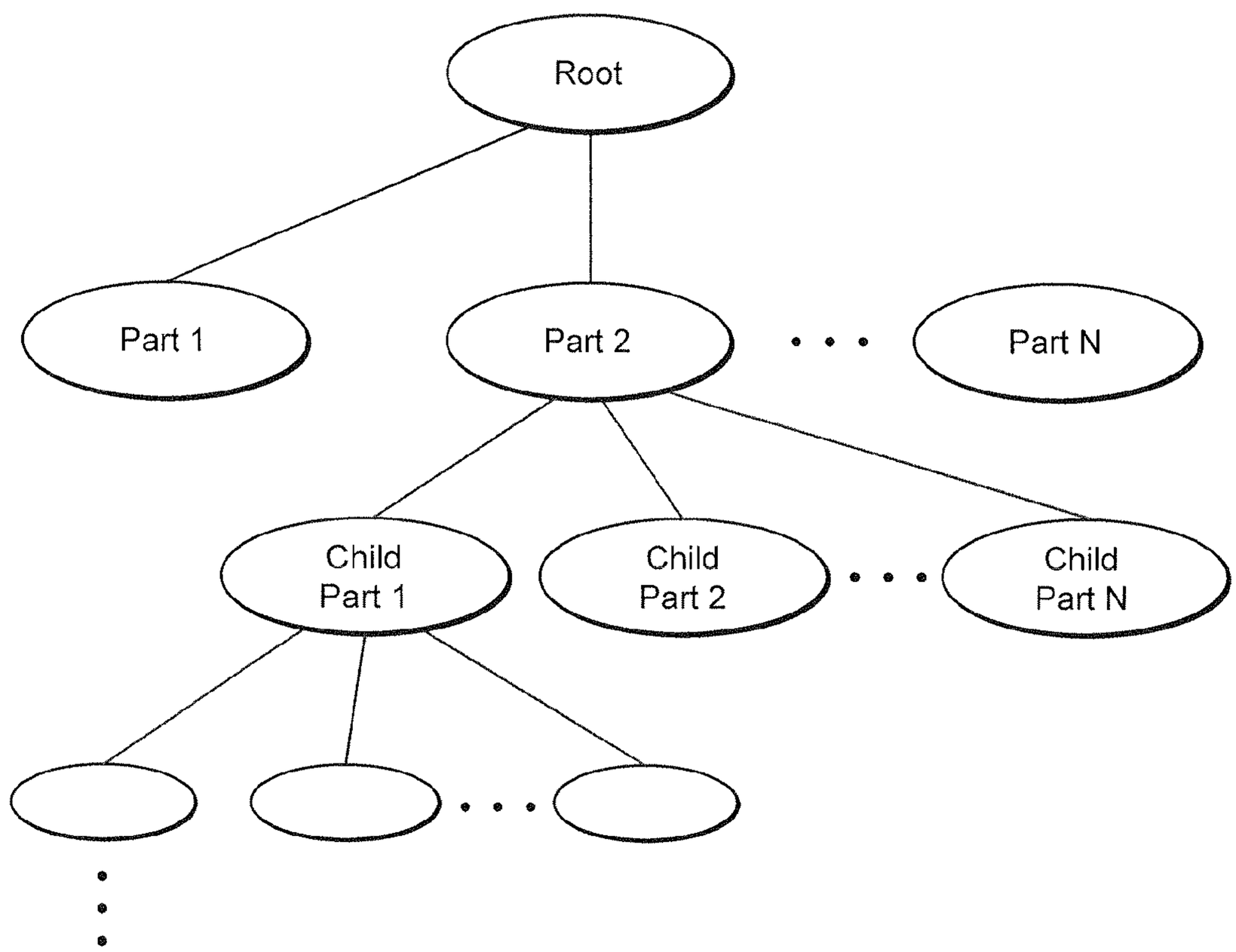

FIG. 2C

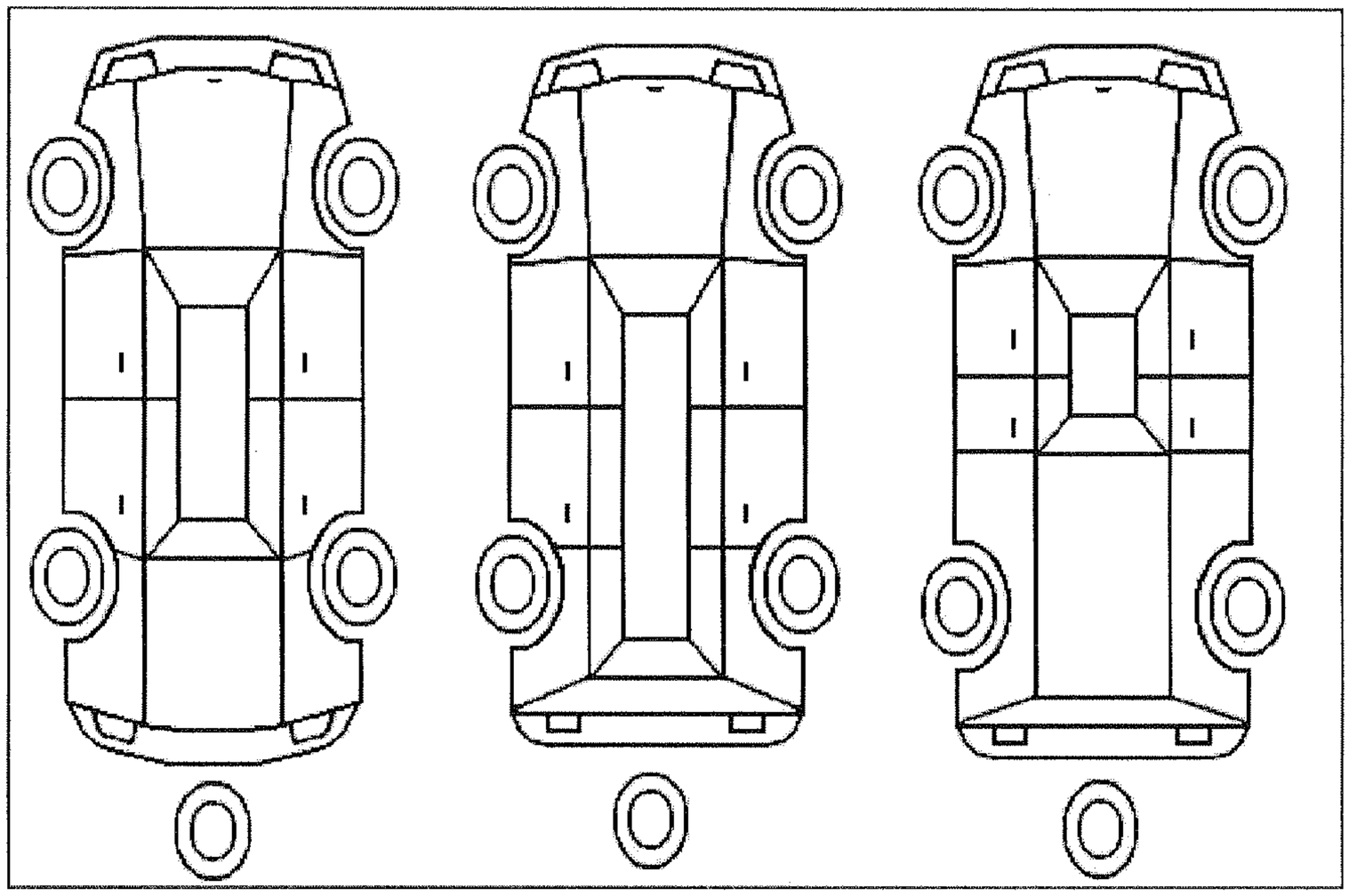

FIG. 3A

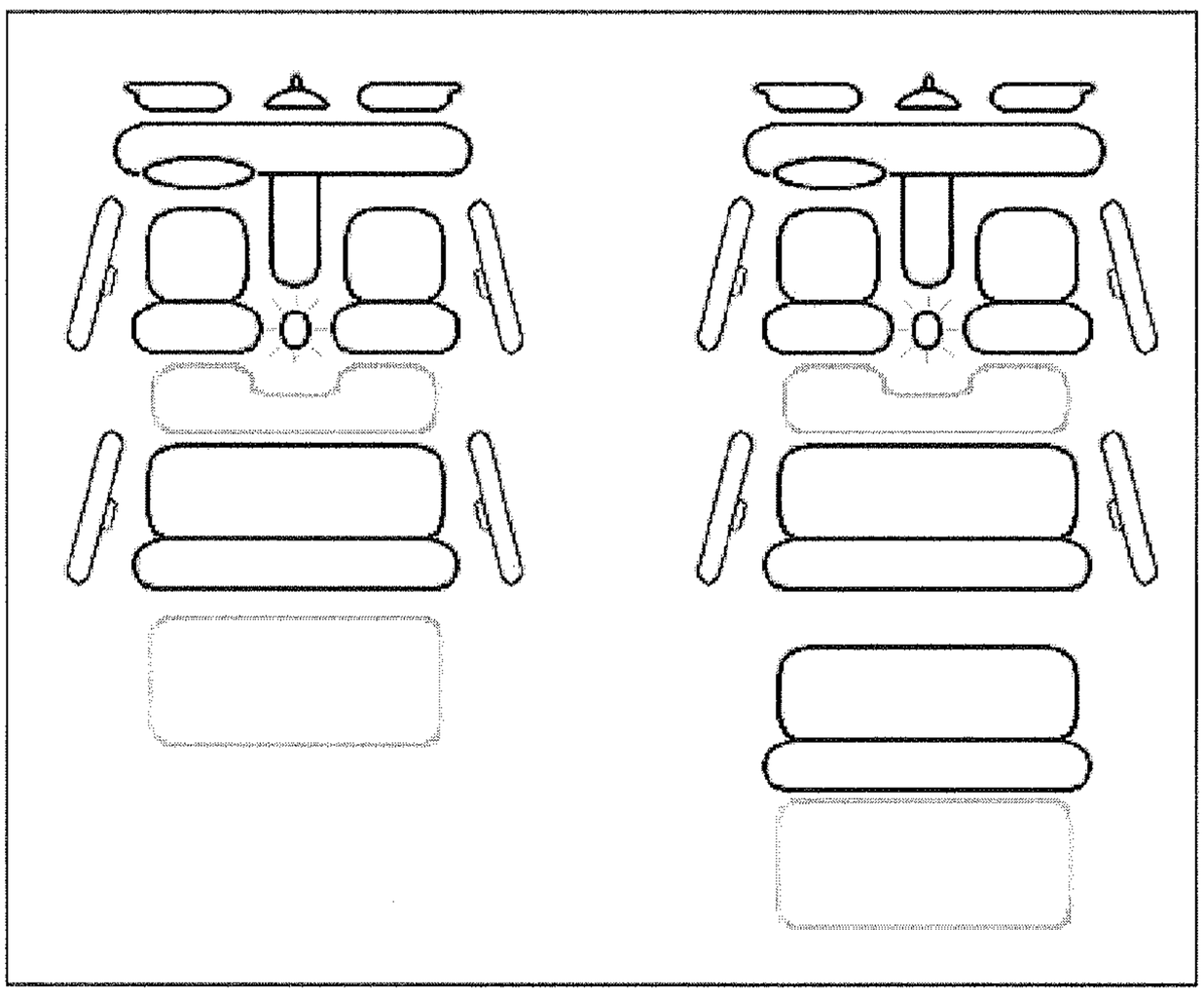

FIG. 3B

```
<map name="4DSN_EXT">
<area shape="poly" coords="90,21,105,21,122,26,117,95,62,95,58,26,76,21" href="Hood|005000"
title=""/>
<area shape="poly"
coords="58,26,46,27,38,30,34,43,41,47,47,53,49,62,49,76,46,84,40,91,34,95,30,95,30,98,62,95"
href="Left_Front_Fender|011000" title=""/>
<area shape="poly"
coords="141,29,122,26,117,95,150,98,150,95,145,95,140,92,133,84,130,74,130,62,132,55,135,50,140,4
6,145,43" href="Right_Front_Fender|031000" title=""/>
<area shape="poly"
coords="146,50,140,54,136,61,135,64,135,76,138,82,144,88,147,89,154,89,157,87,162,81,164,74,164,6
5,162,58,159,54,153,50" href="Right_Front_Wheel|032000" title=""/>
<area shape="poly"
coords="39,55,41,55,39,55,34,50,26,50,21,53,17,59,15,64,15,76,19,83,25,89,33,89,37,87,41,83,44,75,4
4,62" href="Left_Front_Wheel|012000" title=""/>
<area shape="poly" coords="150,98,118,95,117,97,117,157,150,157" href="Right_Front_Door|033000"
title=""/>
<area shape="poly" coords="62,95,30,98,29,99,29,157,62,157" href="Left_Front_Door|013000" title=""/>
<area shape="poly" coords="62,157,29,157,29,204,37,204,44,209,50,219,51,220,62,223"
href="Left_Rear_Door|016000" title=""/>
<area shape="poly"
coords="150,157,117,157,117,223,121,223,130,219,134,211,137,208,143,204,150,204"
href="Right_Rear_Door|036000" title=""/>
<area shape="poly" coords="103,119,117,95,62,95,77,119" href="Windshield|001000" title=""/>
<area shape="poly" coords="62,95,76,118,76,157,62,157" href="Left_Front_Glass|014001" title=""/>
<area shape="poly" coords="117,157,103,157,103,119,117,95" href="Right_Front_Glass|034001"
title=""/>
<area shape="poly" coords="103,119,103,207,76,207,76,119" href="Roof|006000" title=""/>
<area shape="poly" coords="117,157,103,157,103,207,117,223" href="Right_Rear_Glass|037001"
title=""/>
<area shape="poly" coords="76,157,62,157,62,223,76,207" href="Left_Rear_Glass|017001" title=""/>
<area shape="poly" coords="103,207,117,223,63,223,76,207" href="Rear_Glass|023000" title=""/>
<area shape="poly" coords="117,223,117,292,104,294,73,294,62,292,62,223" href="Trunk_Lid|022000"
title=""/>
<area shape="poly"
coords="62,223,50,220,51,225,51,237,48,246,43,252,37,256,35,257,30,257,30,282,62,292"
href="Left_Rear_Qtr_Panel|018000" title=""/>
<area shape="poly"
coords="117,253,117,292,149,282,149,257,142,257,137,253,132,247,128,237,128,224,130,219,121,223
,117,223" href="Right_Rear_Qtr_Panel|038000" title=""/>
<area shape="poly"
coords="152,211,144,211,138,216,134,224,134,237,138,245,145,250,153,250,159,245,163,236,163,223
,159,216" href="Right_Rear_Wheel|039000" title=""/>
<area shape="poly"
coords="34,211,27,211,20,216,16,225,16,237,20,244,27,250,35,250,40,246,45,238,45,224,41,216"
href="Left_Rear_Wheel|019000" title=""/>
<area shape="poly"
coords="89,294,107,294,121,292,122,299,134,296,137,290,137,287,148,283,142,295,136,300,108,308,
70,308,43,300,37,295,30,282,42,286,44,295,56,299,59,291,73,294" href="Rear_Bumper|024000"
title=""/>
<area shape="poly" coords="59,291,42,286,44,295,56,299" href="Left_Rear_Lights|021105" title=""/>
<area shape="poly" coords="137,286,137,290,134,296,123,299,121,291"
href="Right_Rear_Lights|021101" title=""/>
<area shape="poly"
coords="85,316,79,321,75,329,75,343,80,351,85,355,93,355,100,350,104,342,104,329,101,322,94,316"
href="Spare_Tire|026000" title=""/>
```


FIG.3C

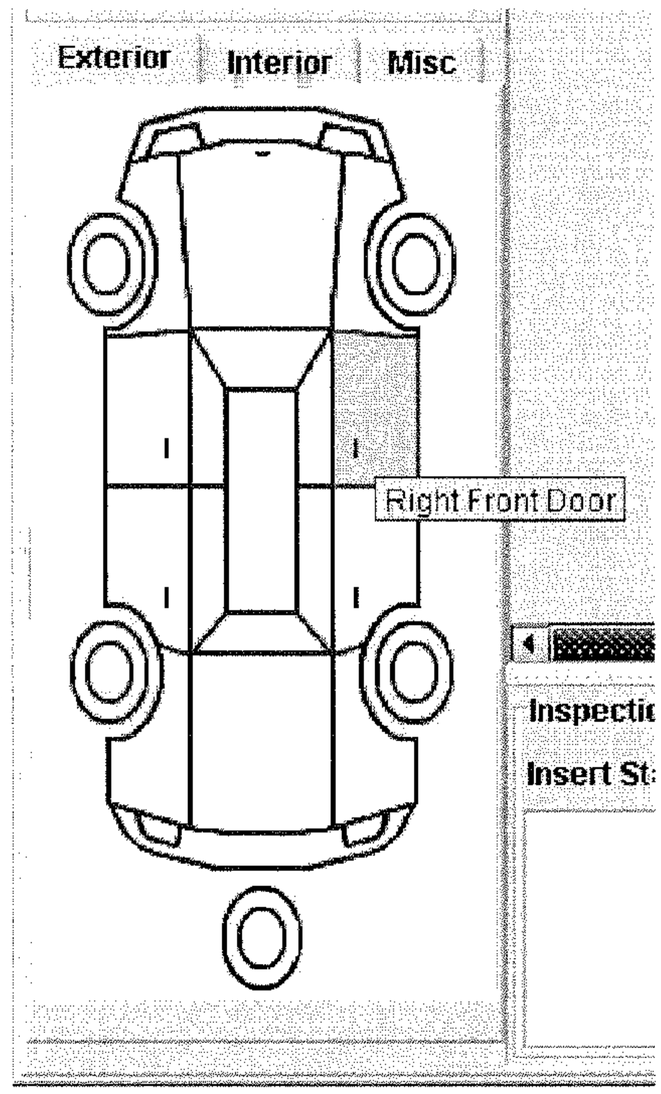
Exterior
Interior
Misc
Right Front Door
Inspectio
Insert St

FIG. 4

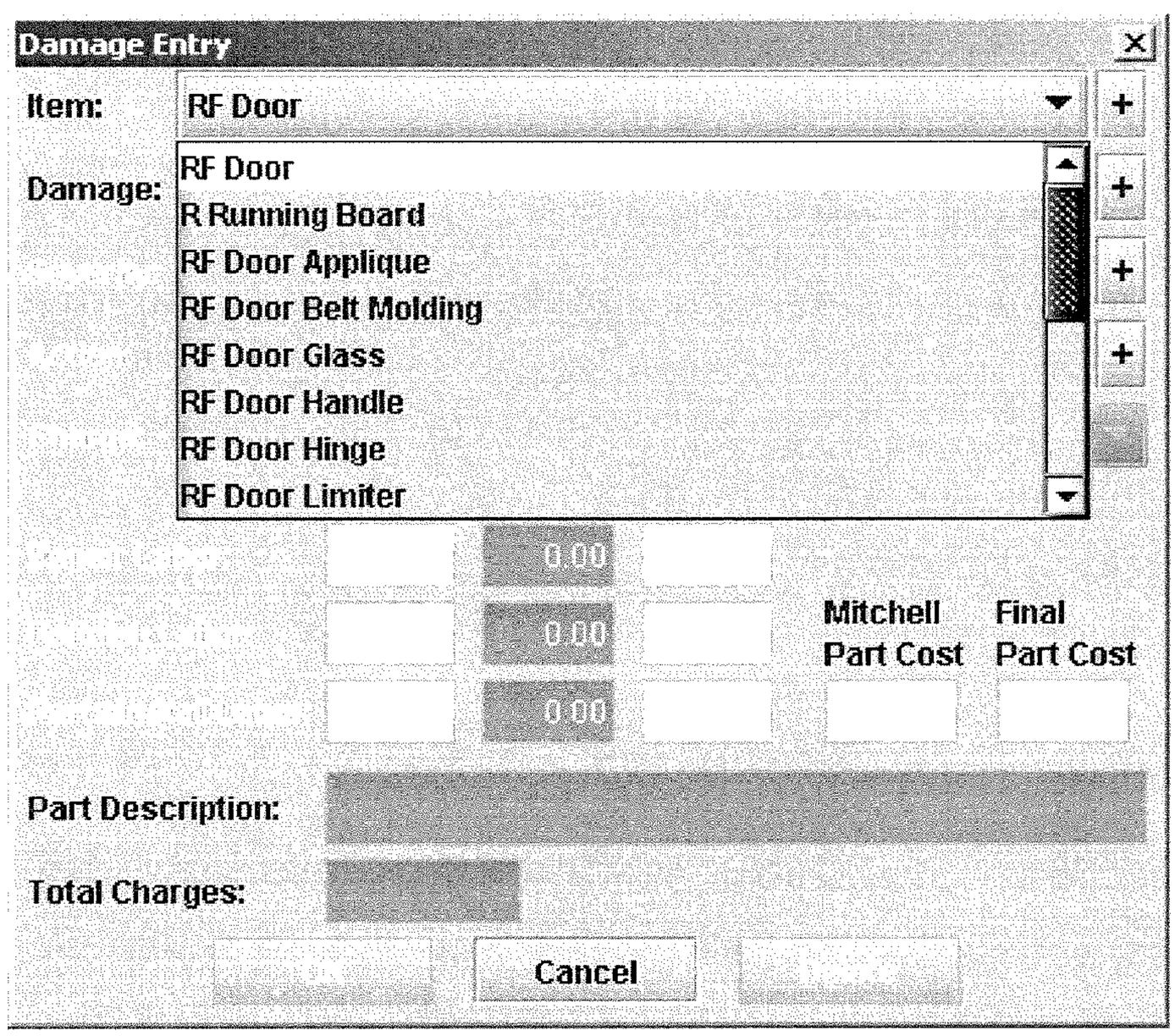
Damage Entry
Item:
RF Door
Damage:
RF Door
R Running Board
RF Door Applique
RF Door Belt Molding
RF Door Glass
RF Door Handle
RF Door Hinge
RF Door Limiter
0.00
0.00
0.00
Mitchell Part Cost
Final Part Cost
Part Description:
Total Charges:
Cancel

FIG. 5

Client	Part	Damage	Severity	Action	Chargeability
Chrysler	Windshield	Broken	Replacement Req.	Replace	Chargeable
Chrysler	Windshield	Bulls-eye	>1"	Replace	Chargeable
Chrysler	Windshield	Bulls-eye	<1"	Repair	Non-Chargeable
Chrysler	Windshield	Chipped	>1"	Replace	Chargeable
Chrysler	Windshield	Chipped	<1"	Repair	Non-Chargeable
Chrysler	Hood	Scratch	Buffable	Buff	Non-Chargeable
Chrysler	Hood	Scratch	<1"	Touch-Up	Non-Chargeable
Chrysler	Hood	Scratch	1" – 1.99"	Touch-Up	Chargeable
Chrysler	Hood	Scratch	>2"	Repaint	Chargeable
Chrysler	Hood	Dent	<1"	PDR*	Non-Chargeable
Chrysler	Hood	Dent	1" – 5.99"	Repair	Chargeable
Chrysler	Hood	Dent	>6"	Replace	Chargeable

*Paintless Dent Repair

FIG. 6

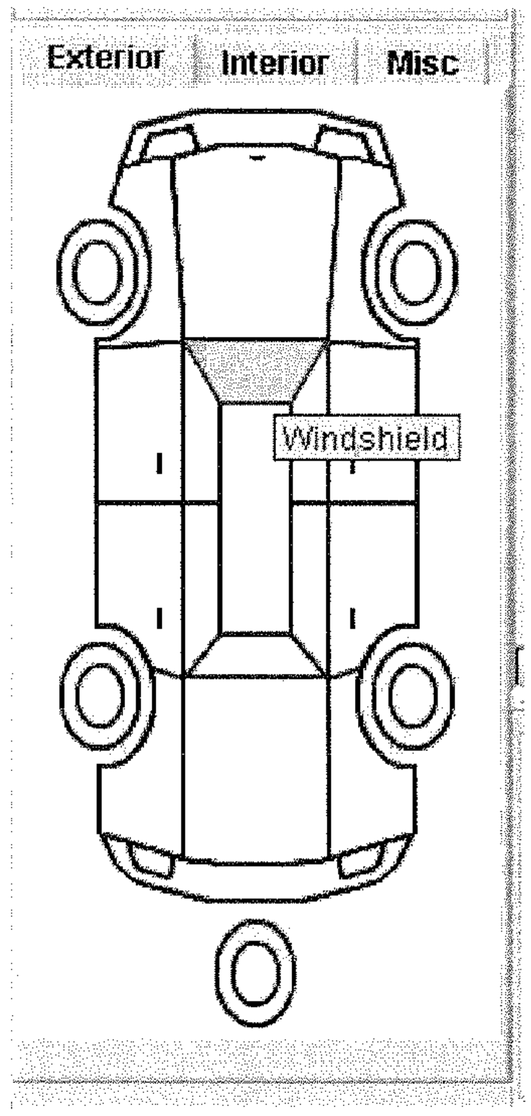
Exterior
Interior
Misc
Windshield

FIG. 7

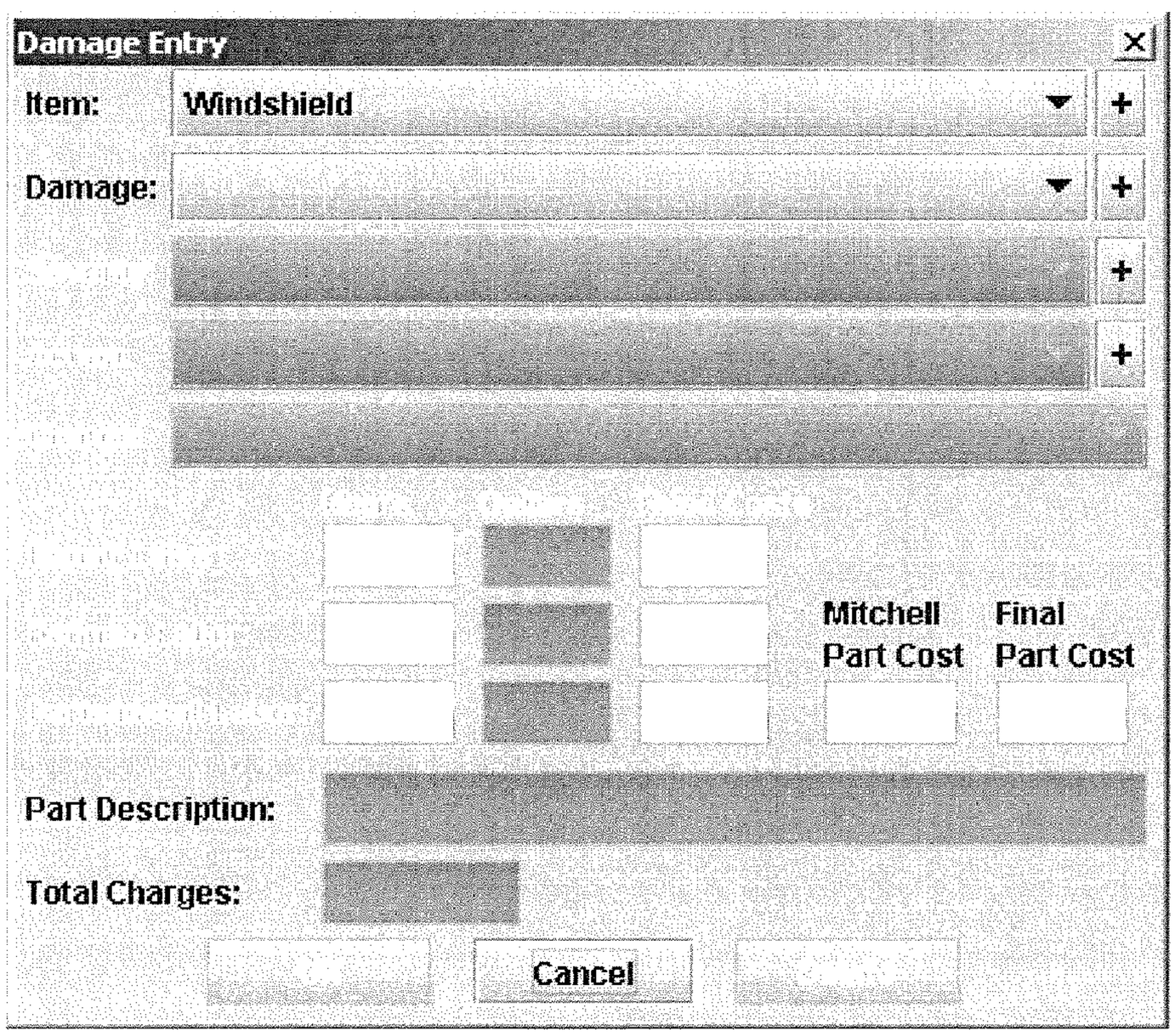
Damage Entry
Item:
Windshield
Damage:
Mitchell Part Cost
Final Part Cost
Part Description:
Total Charges:
Cancel

FIG. 8

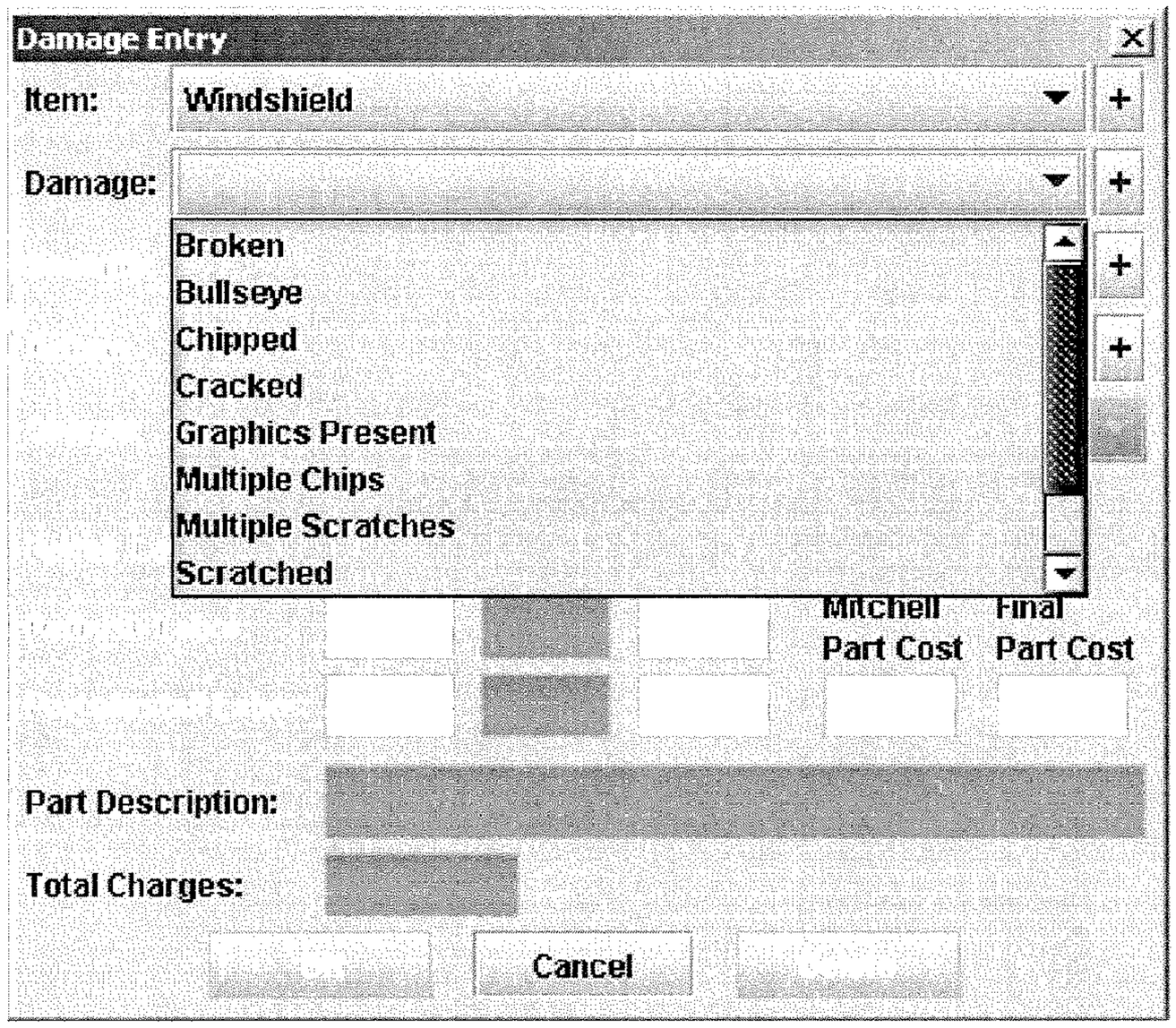
Damage Entry
Item:
Windshield
Damage:
Broken
Bullseye
Chipped
Cracked
Graphics Present
Multiple Chips
Multiple Scratches
Scratched
Mitchell Part Cost
Final Part Cost
Part Description:
Total Charges:
Cancel

FIG. 9

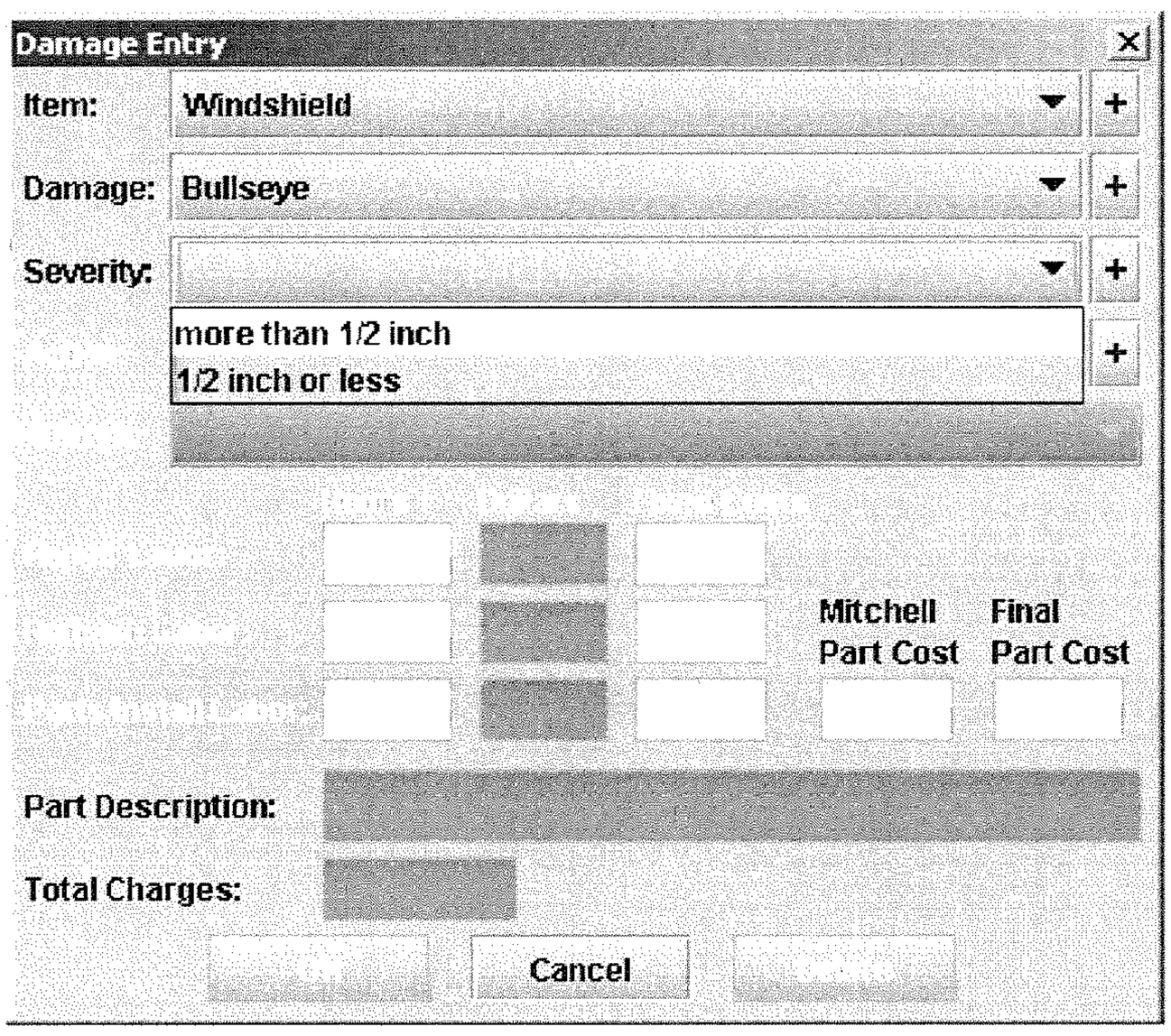
Damage Entry
Item:
Windshield
Damage:
Bullseye
Severity:
more than 1/2 inch
1/2 inch or less
Mitchell Part Cost
Final Part Cost
Part Description:
Total Charges:
Cancel

FIG. 10

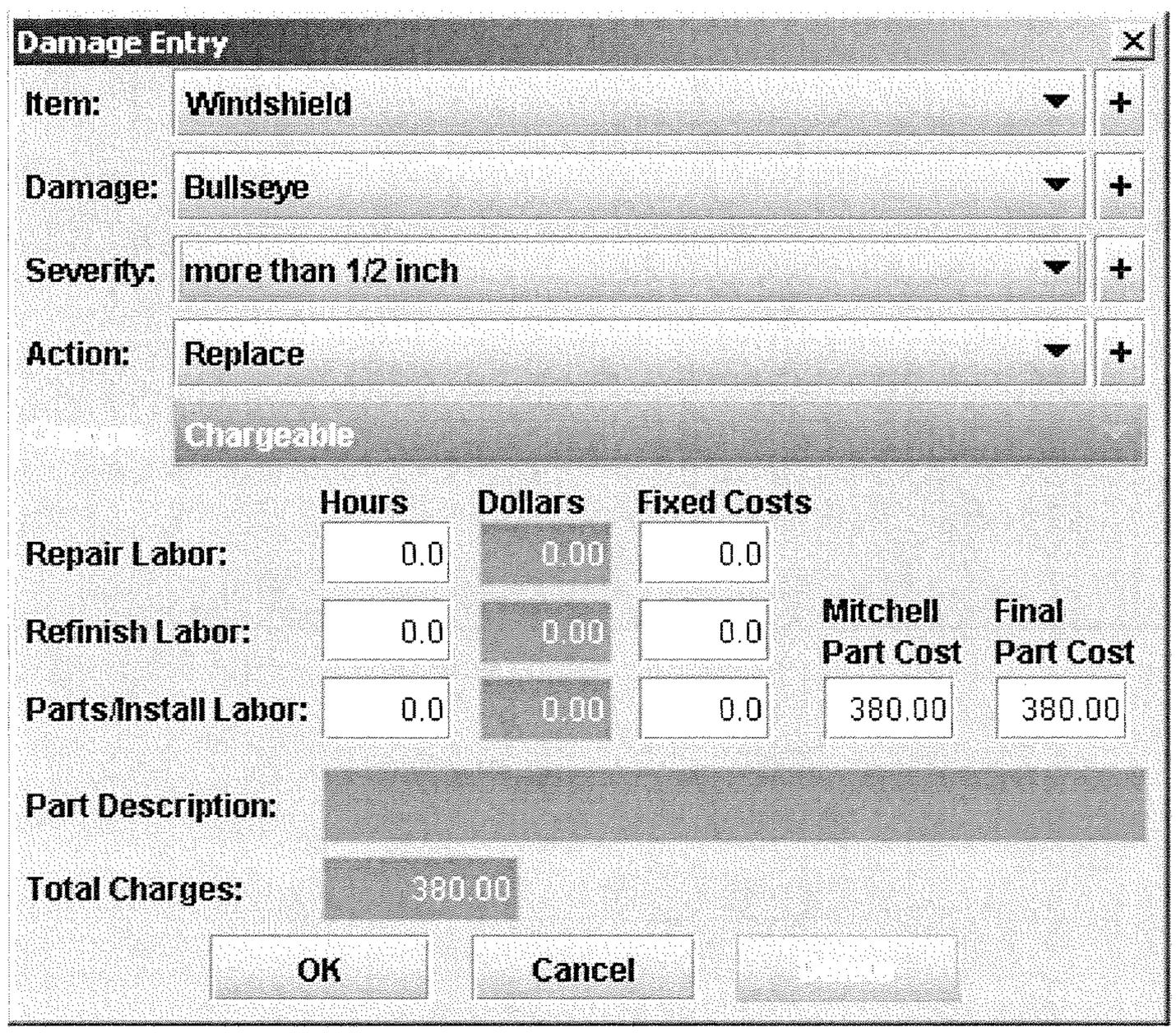
Damage Entry
Item:
Windshield
Damage:
Bullseye
Severity:
more than 1/2 inch
Action:
Replace
Chargeable
Hours
Dollars
Fixed Costs
Repair Labor:
0.0
0.00
0.0
Refinish Labor:
0.0
0.00
0.0
Mitchell Part Cost
Final Part Cost
Parts/Install Labor:
0.0
0.00
0.0
380.00
380.00
Part Description:
Total Charges:
380.00
OK
Cancel

FIG. 11

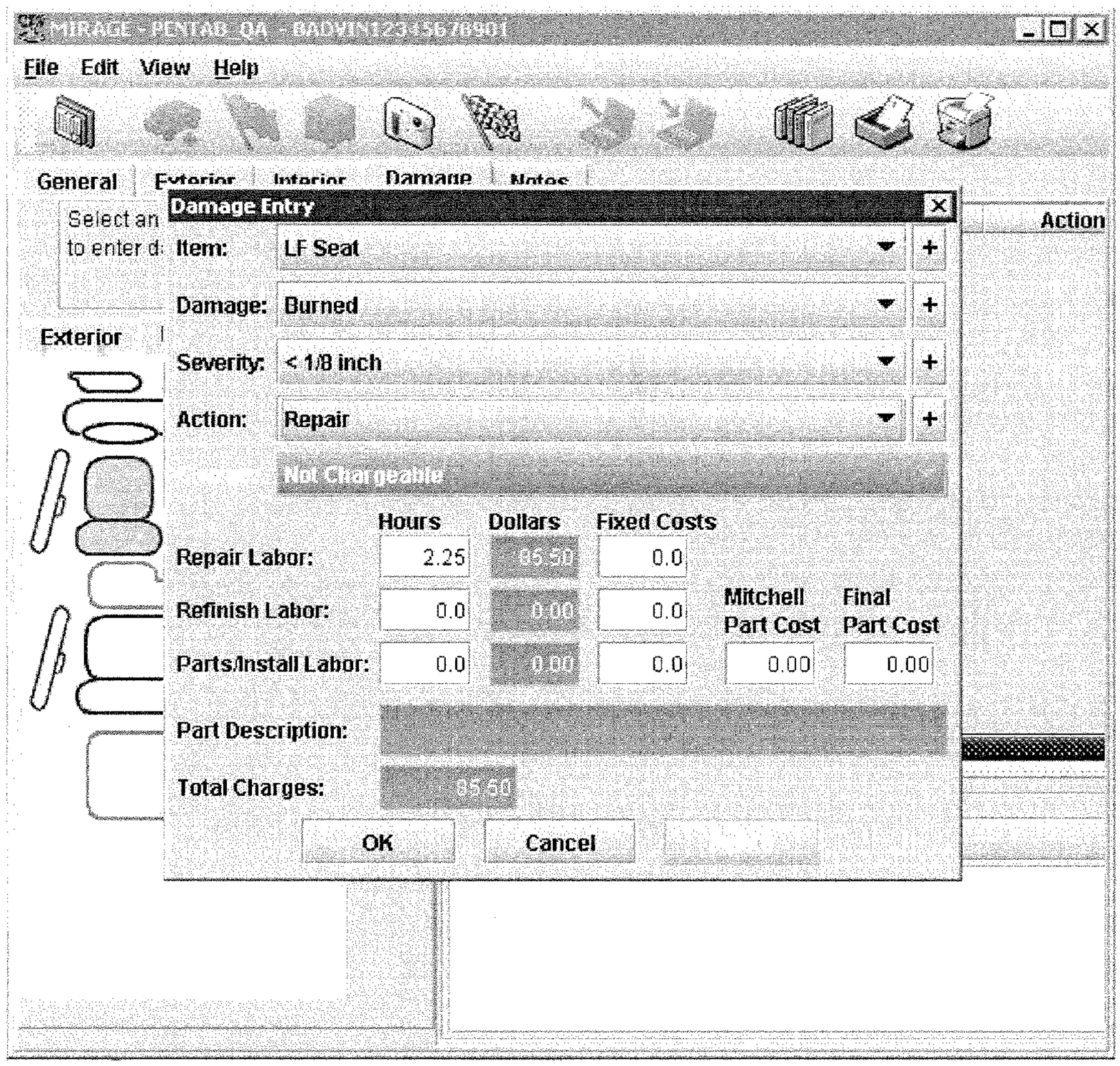
File Edit View Help
General
Damage
Damage Entry
Action
Item: LF Seat
Damage: Burned
Severity: < 1/8 inch
Action: Repair
Not Chargeable
Hours
Dollars
Fixed Costs
Repair Labor: 2.25 0.0
Refinish Labor: 0.0 0.00 0.0
Parts/Install Labor: 0.0 0.00 0.0
Mitchell Part Cost
Final Part Cost
0.00 0.00
Part Description:
Total Charges:
OK
Cancel
Exterior

FIG. 12A

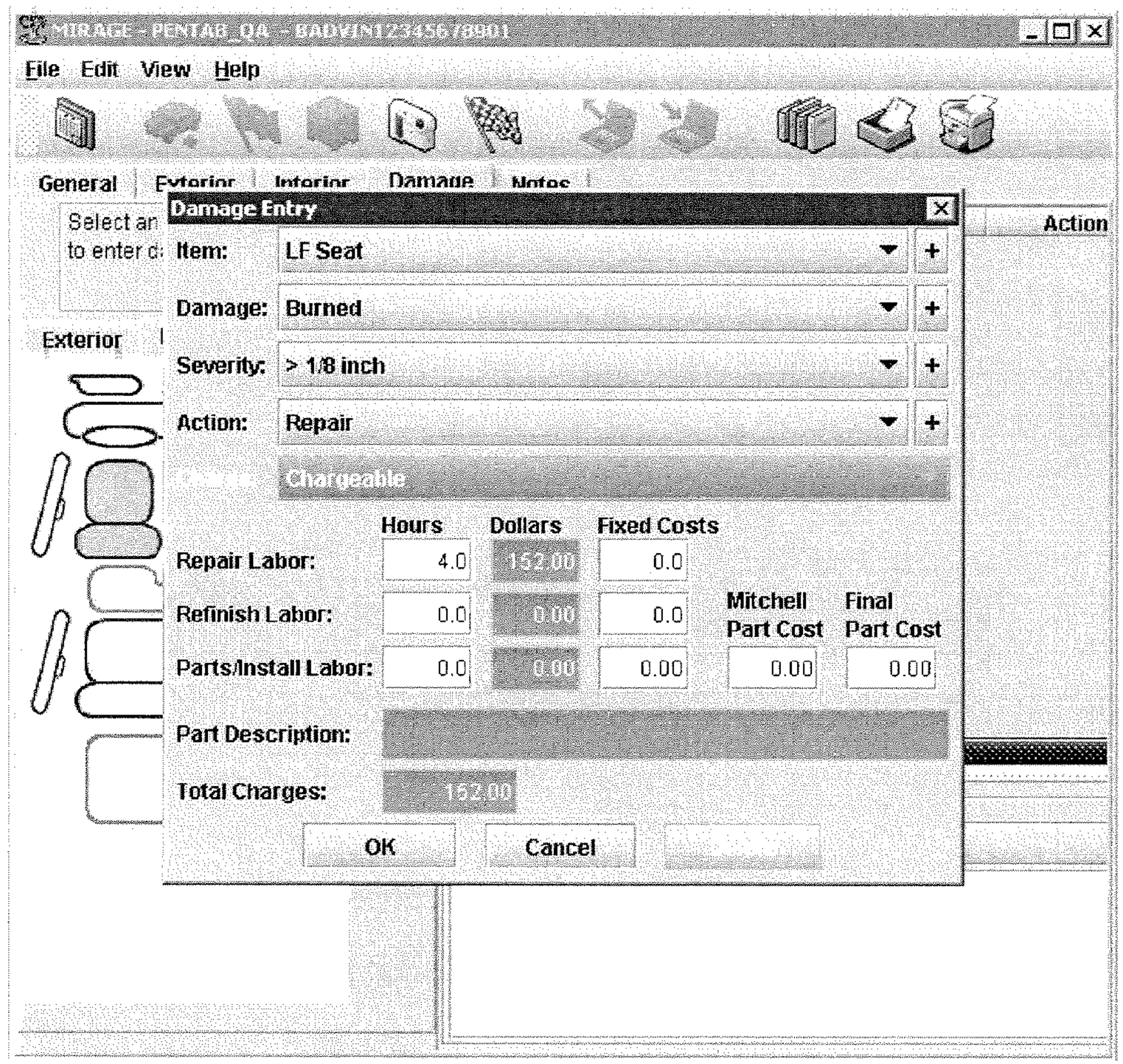
MIRAGE - PENTAB_QA - BADVIN1234567890I
File Edit View Help
General
Exterior
Interior
Damage
Notes
Action
Damage Entry
Item: LF Seat
Damage: Burned
Severity: > 1/8 inch
Action: Repair
Chargeable
Hours
Dollars
Fixed Costs
Repair Labor: 4.0 152.00 0.0
Refinish Labor: 0.0 0.00 0.0
Parts/Install Labor: 0.0 0.00 0.00
Mitchell Part Cost
Final Part Cost
0.00
0.00
Part Description:
Total Charges: 152.00
OK
Cancel

FIG. 12B

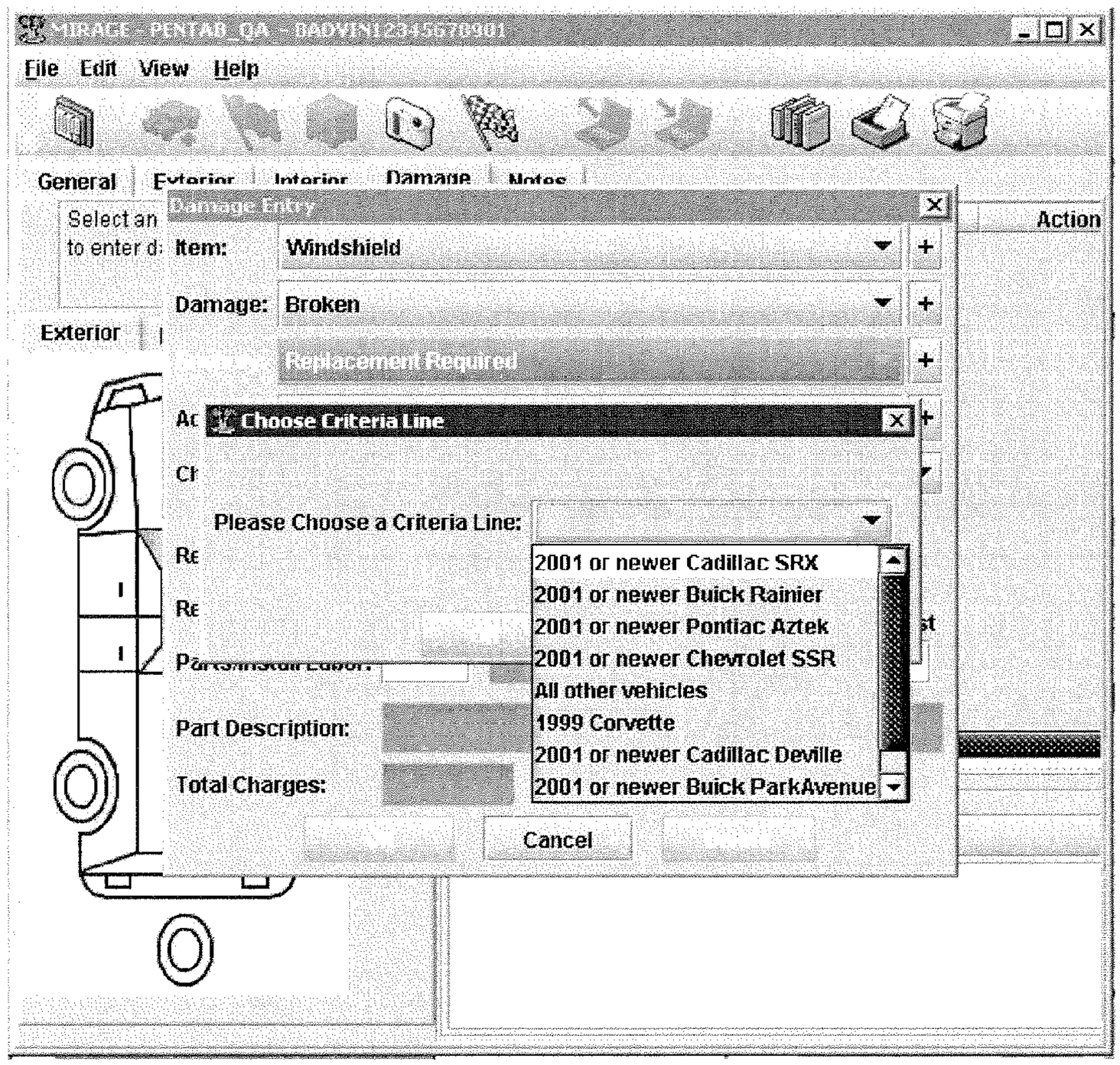
File Edit View Help
General
Damage
Damage Entry
Item:
Windshield
Damage:
Broken
Replacement Required
Action
Exterior
Choose Criteria Line
Please Choose a Criteria Line:
2001 or newer Cadillac SRX
2001 or newer Buick Rainier
2001 or newer Pontiac Aztek
2001 or newer Chevrolet SSR
All other vehicles
1999 Corvette
2001 or newer Cadillac Deville
2001 or newer Buick ParkAvenue
Part Description:
Total Charges:
Cancel

FIG. 12C

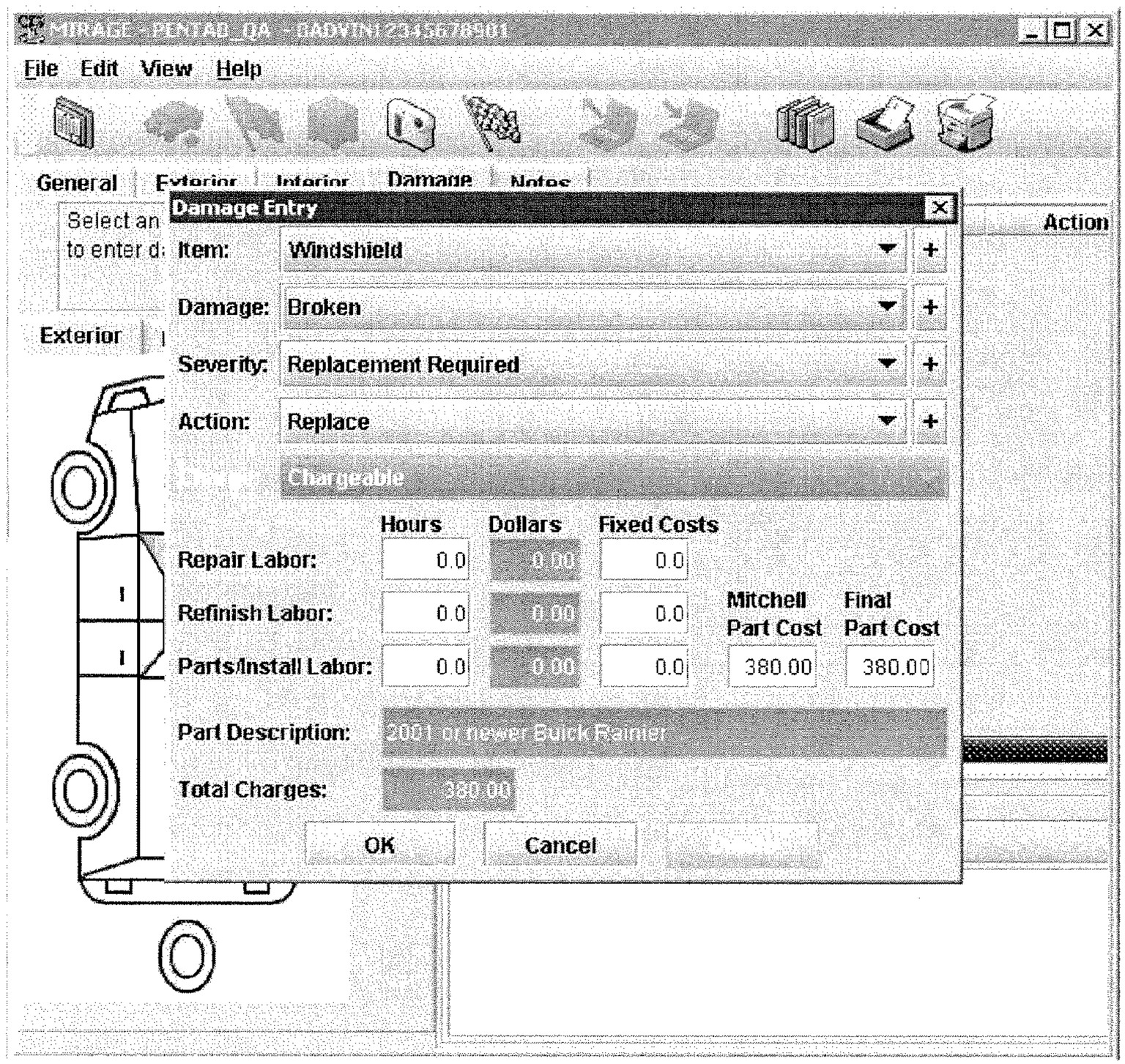
File Edit View Help
General
Damage
Damage Entry
Item: Windshield
Damage: Broken
Severity: Replacement Required
Action: Replace
Chargeable
Hours
Dollars
Fixed Costs
Repair Labor: 0.0 0.00 0.0
Refinish Labor: 0.0 0.00 0.0
Parts/Install Labor: 0.0 0.00 0.0
Mitchell Part Cost
Final Part Cost
380.00
380.00
Part Description: 2001 or newer Buick Rainier
Total Charges: 380.00
OK
Cancel
Action
Exterior

FIG. 12D

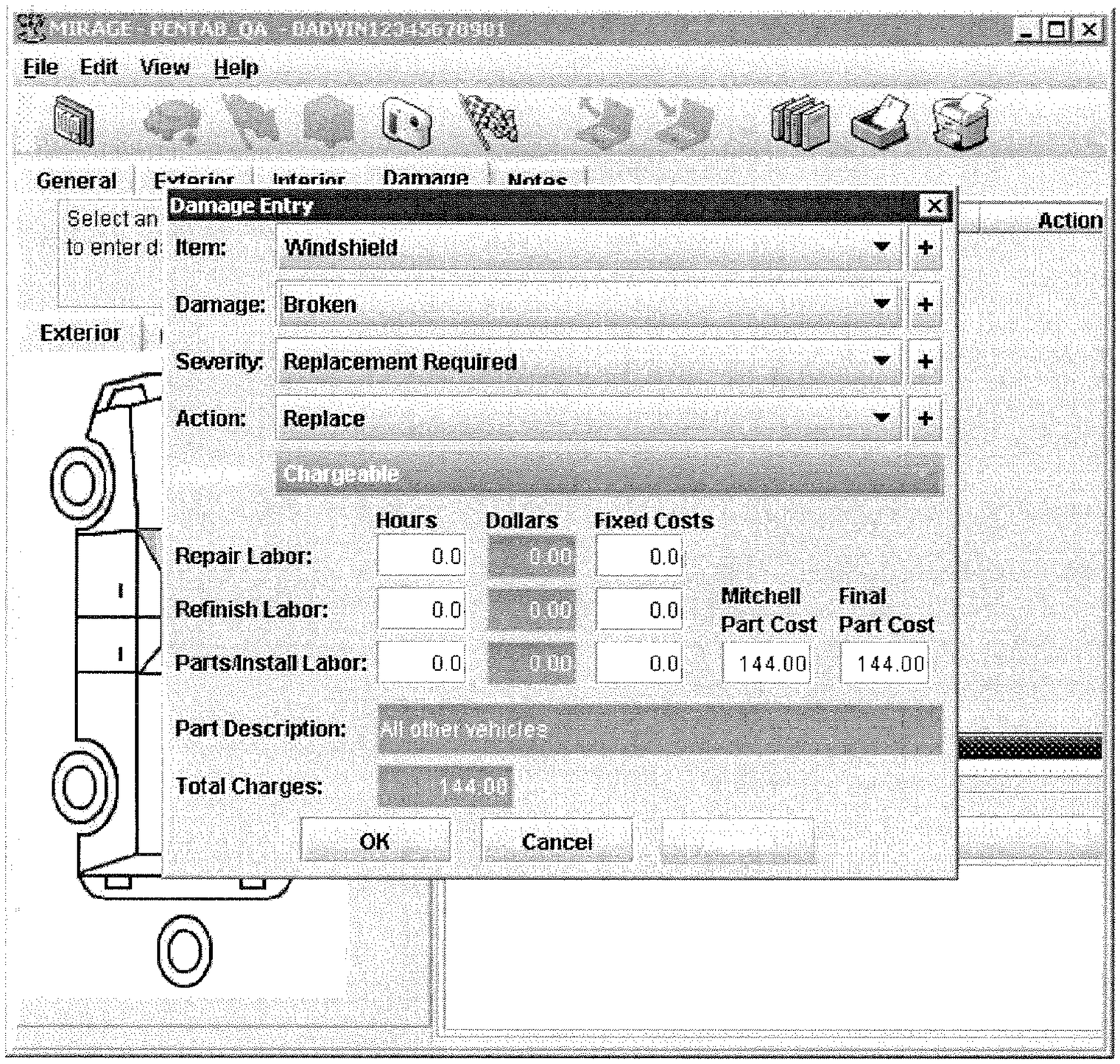
File Edit View Help
General
Damage
Damage Entry
Item: Windshield
Damage: Broken
Severity: Replacement Required
Action: Replace
Chargeable
Hours
Dollars
Fixed Costs
Repair Labor: 0.0 0.00 0.0
Refinish Labor: 0.0 0.00 0.0
Parts/Install Labor: 0.0 0.00 0.0
Mitchell Part Cost
Final Part Cost
144.00
144.00
Part Description: All other vehicles
Total Charges: 144.00
OK
Cancel
Action
Exterior

FIG. 12E

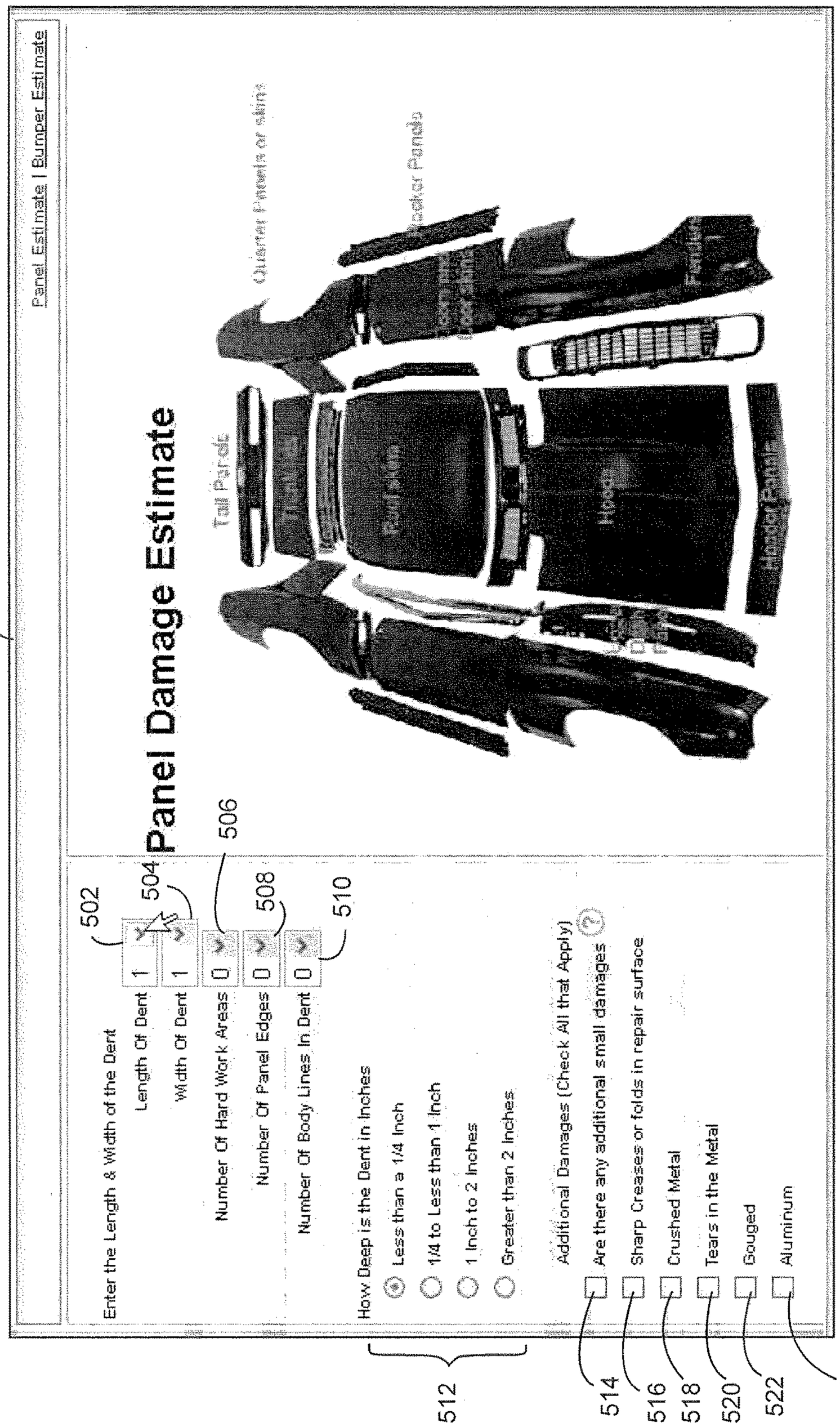
500
Panel Estimate | Bumper Estimate
Panel Damage Estimate
Quarter Panels or skins
Bumper Panels
Tail Panel
Hood
Enter the Length & Width of the Dent
Length Of Dent
Width Of Dent
Number Of Hard Work Areas
Number Of Panel Edges
Number Of Body Lines In Dent
How Deep is the Dent in Inches
Less than a 1/4 Inch
1/4 to Less than 1 Inch
1 Inch to 2 Inches
Greater than 2 Inches
Additional Damages (Check All that Apply)
Are there any additional small damages
Sharp Creases or folds in repair surface
Crushed Metal
Tears in the Metal
Gouged
Aluminum
502
504
506
508
510
512
514
516
518
520
522
524

FIG. 13A

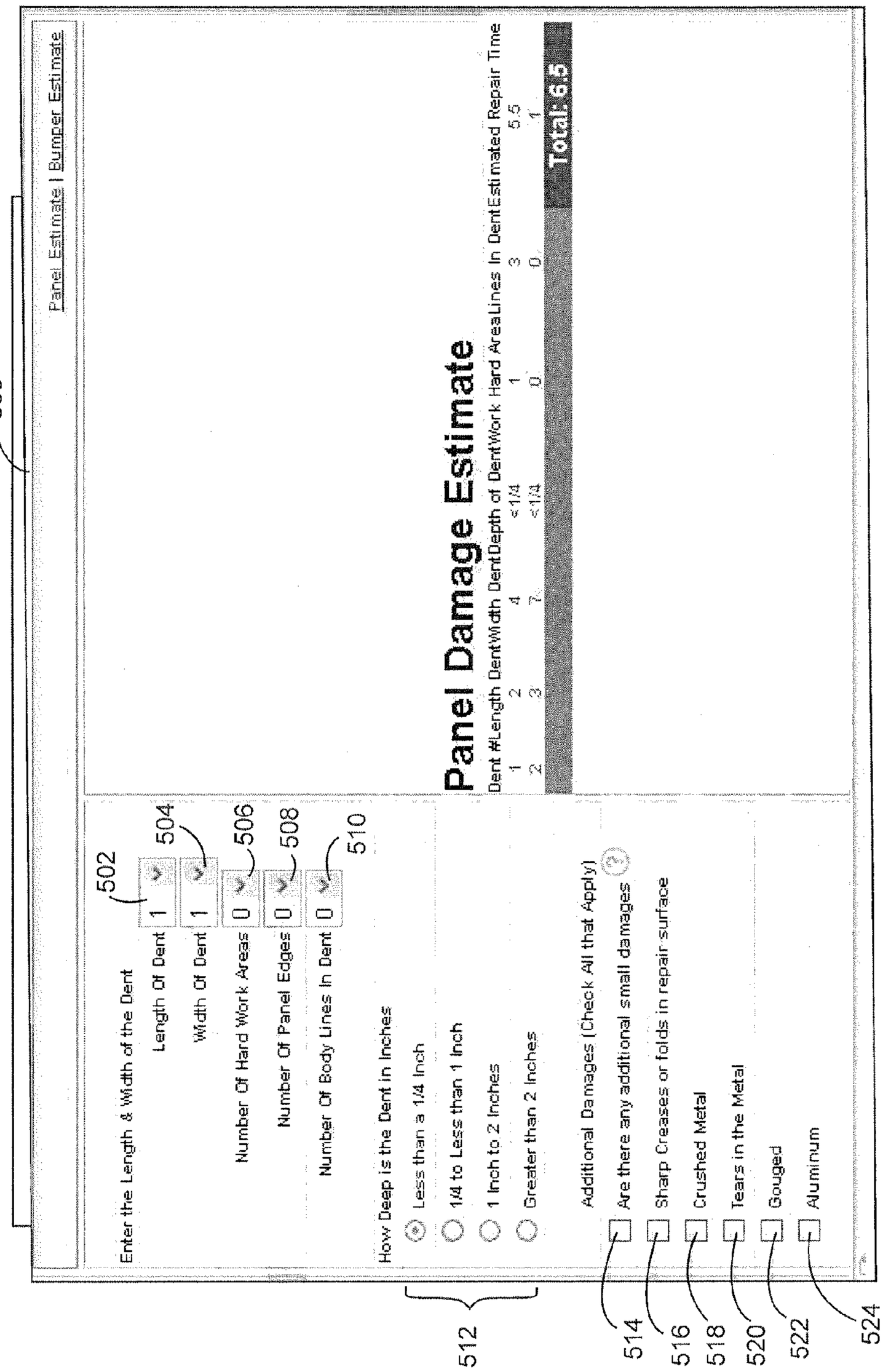
530
Panel Estimate | Bumper Estimate
Panel Damage Estimate
Dent #Length DentWidth DentDepth of DentWork Hard AreaLines In DentEstimated Repair Time
1 2 4 ≤1/4 1 3 5.5
2 3 7 ≤1/4 0 0 1
Total: 6.5
Enter the Length & Width of the Dent
Length Of Dent 1
Width Of Dent 1
Number Of Hard Work Areas 0
Number Of Panel Edges 0
Number Of Body Lines In Dent 0
How Deep is the Dent in Inches
Less than a 1/4 Inch
1/4 to Less than 1 Inch
1 Inch to 2 Inches
Greater than 2 Inches
Additional Damages (Check All that Apply)
Are there any additional small damages
Sharp Creases or folds in repair surface
Crushed Metal
Tears in the Metal
Gouged
Aluminum
502
504
506
508
510
512
514
516
518
520
522
524

FIG. 13B

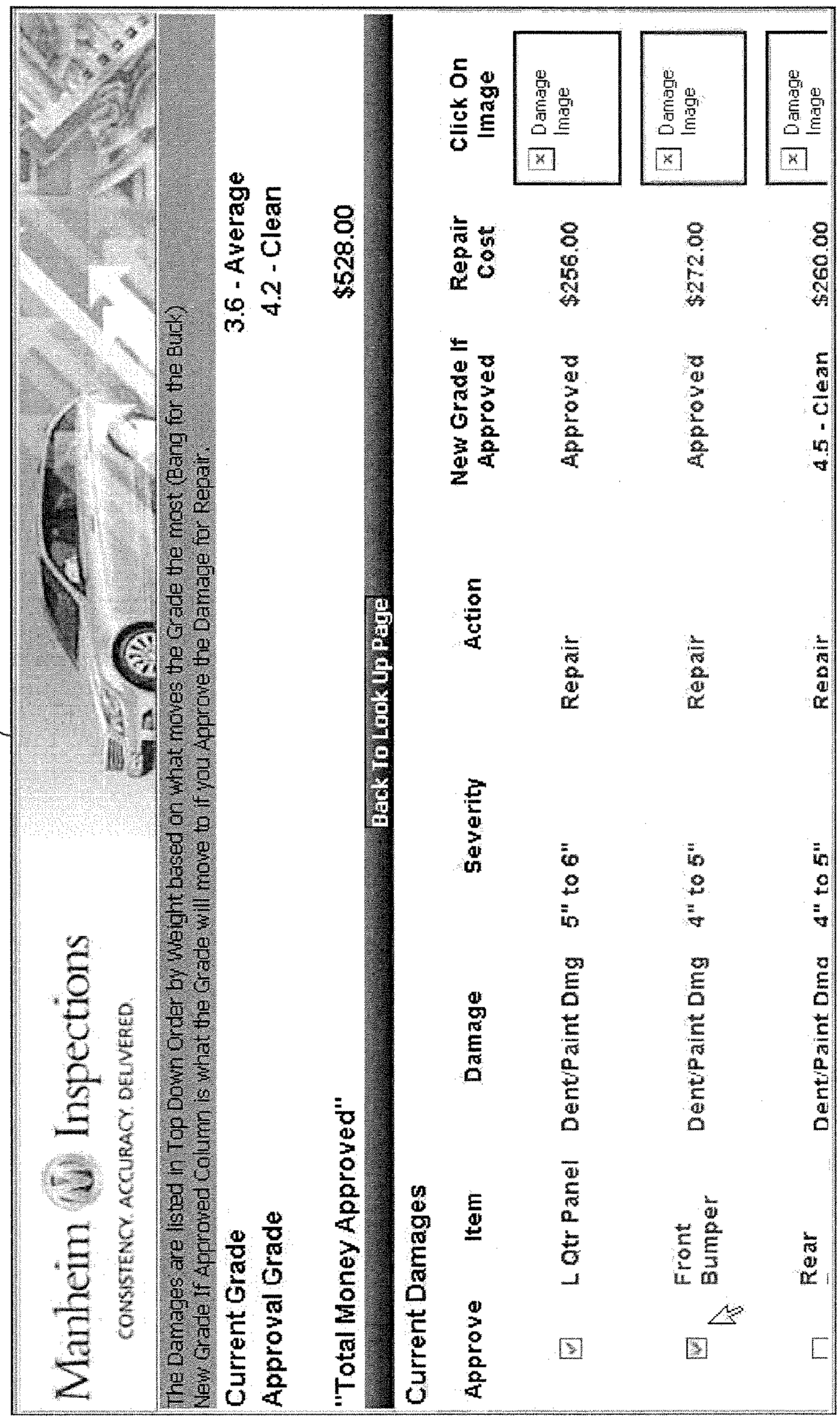
532
Manheim Inspections
CONSISTENCY. ACCURACY. DELIVERED.
The Damages are listed in Top Down Order by Weight based on what moves the Grade the most (Bang for the Buck)
New Grade If Approved Column is what the Grade will move to if you Approve the Damage for Repair.
Current Grade
3.6 - Average
Approval Grade
4.2 - Clean
"Total Money Approved"
$528.00
Back To Look Up Page
Current Damages
Approve
Item
Damage
Severity
Action
New Grade If Approved
Repair Cost
Click On Image
L Qtr Panel
Dent/Paint Dmg
5" to 6"
Repair
Approved
$256.00
Damage Image
Front Bumper
Dent/Paint Dmg
4" to 5"
Repair
Approved
$272.00
Damage Image
Rear
Dent/Paint Dmg
4" to 5"
Repair
4.5 - Clean
$260.00
Damage Image

FIG. 13C

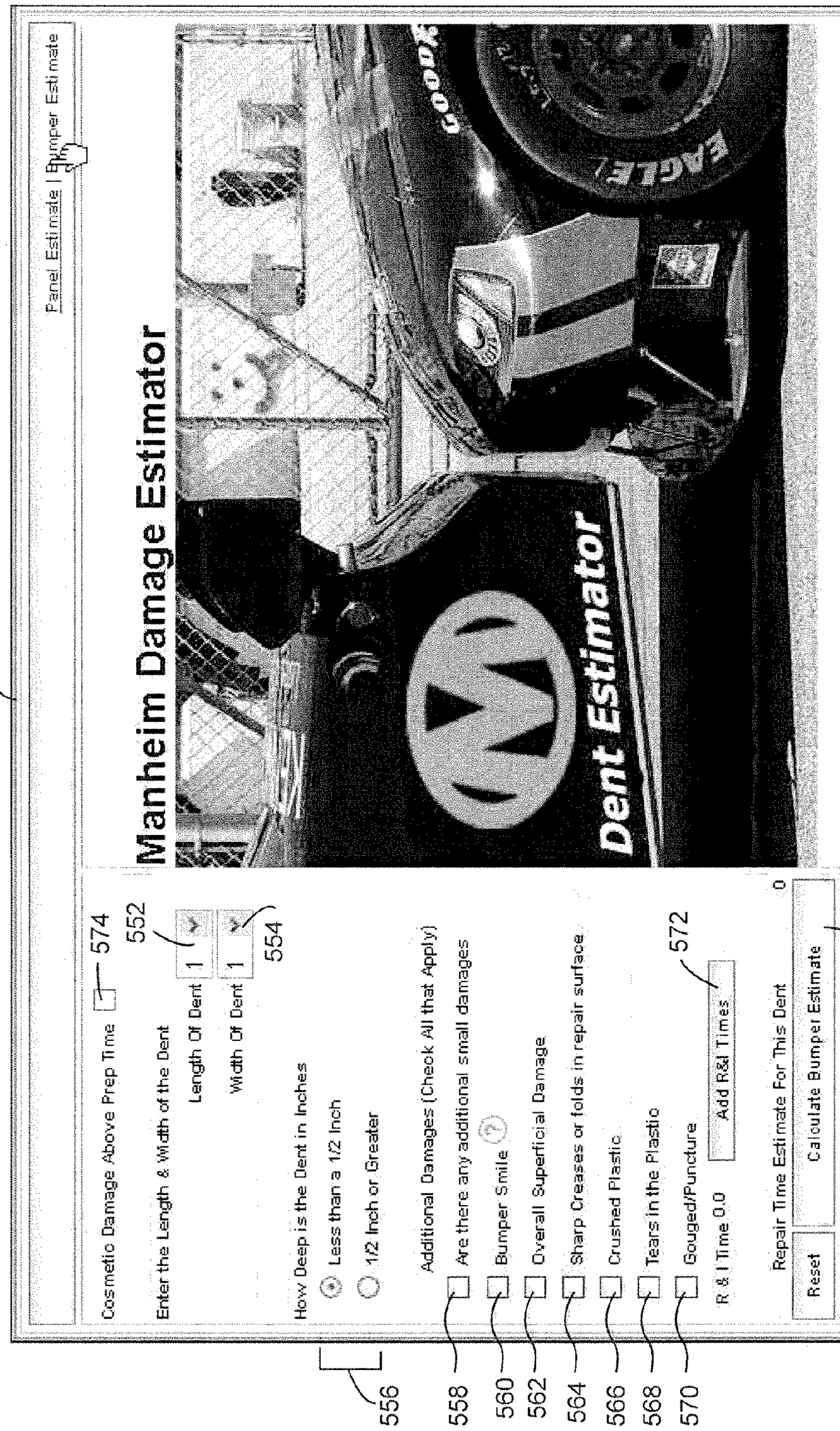
550
Panel Estimate | Bumper Estimate
Manheim Damage Estimator
Dent Estimator
Cosmetic Damage Above Prep Time
574
Enter the Length & Width of the Dent
Length Of Dent
1
552
Width Of Dent
1
554
How Deep is the Dent in Inches
Less than a 1/2 Inch
1/2 Inch or Greater
556
Additional Damages (Check All that Apply)
Are there any additional small damages
558
Bumper Smile
560
Overall Superficial Damage
562
Sharp Creases or folds in repair surface
564
Crushed Plastic
566
Tears in the Plastic
568
Gouged/Puncture
570
R & I Time 0.0
Add R&I Times
572
Repair Time Estimate For This Dent
0
Reset
Calculate Bumper Estimate
576

FIG. 14A

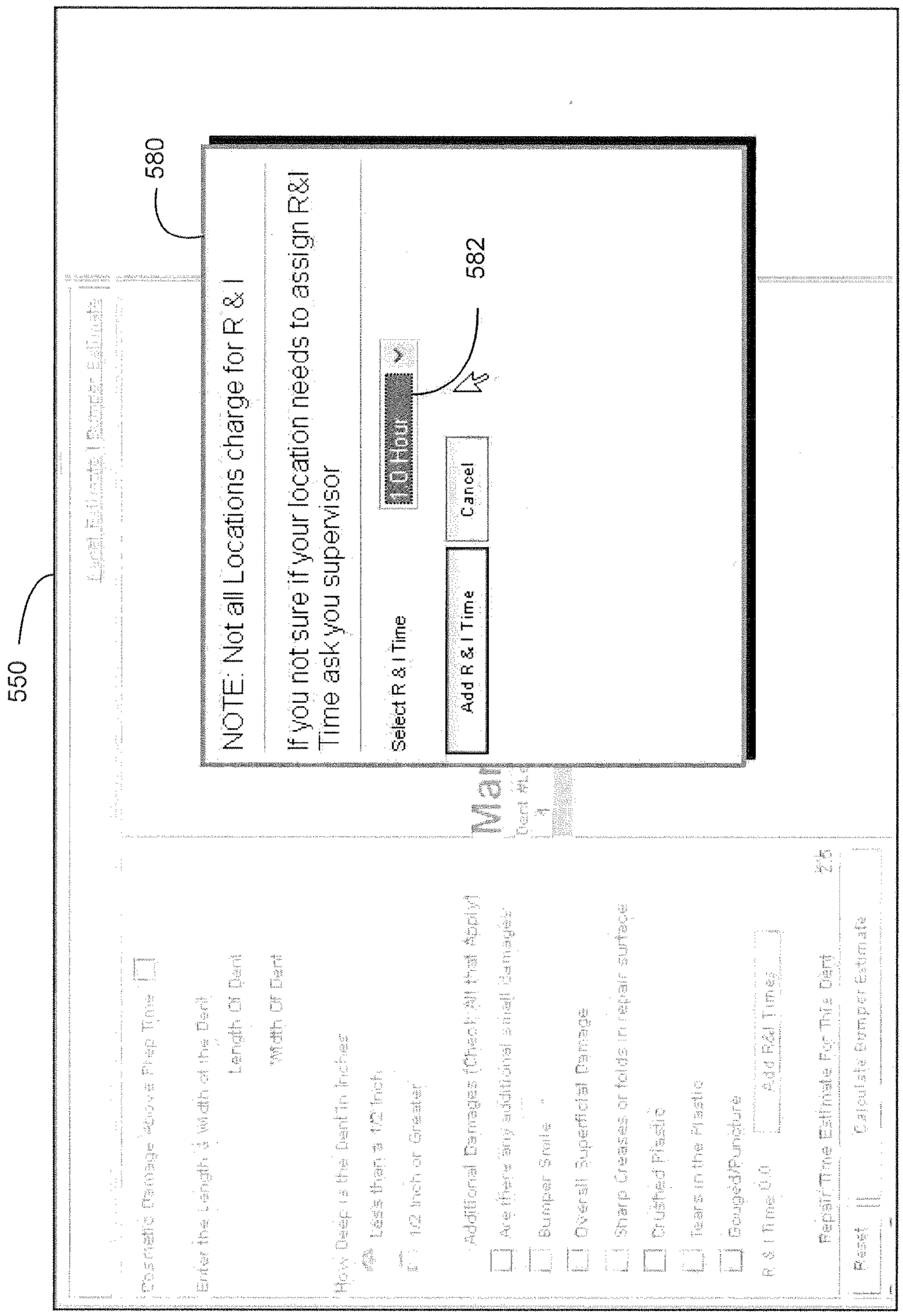
550
580
582
NOTE: Not all Locations charge for R & I
If you not sure if your location needs to assign R&I Time ask you supervisor
Select R & I Time
Add R & I Time
Cancel
Cosmetic Damage Above Prep Time
Enter the Length & Width of the Dent
Length Of Dent
Width Of Dent
How Deep is the Dent in Inches
Less than a 1/2 Inch
1/2 Inch or Greater
Additional Damages (Check All that Apply)
Are there any additional small damages
Bumper Scuff
Overall Superficial Damage
Sharp Creases or folds in metal surface
Crushed Plastic
Tears in the Plastic
Dough/Puncture
R & I Times 0.0
Add R&I Times
Repair Time Estimate For This Dent
Reset
Calculate Damage Estimate

FIG. 14B

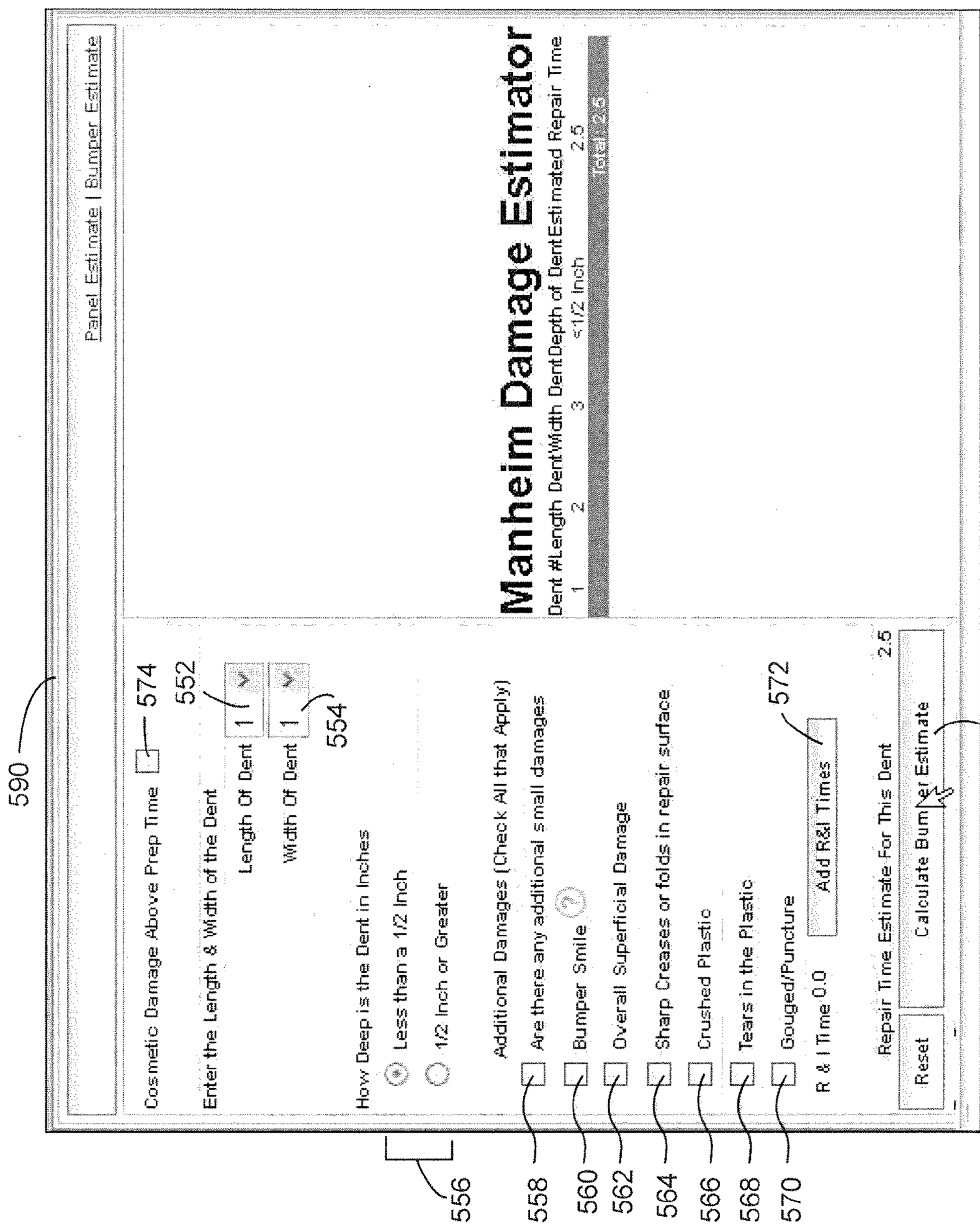
590
Panel Estimate | Bumper Estimate
Manheim Damage Estimator
Dent # Length Dent Width Dent Depth of Dent Estimated Repair Time
1 2 3 <1/2 Inch 2.5
Total 2.5
Cosmetic Damage Above Prep Time
574
Enter the Length & Width of the Dent
552
Length Of Dent 1
Width Of Dent 1
554
How Deep is the Dent in Inches
Less than a 1/2 Inch
1/2 Inch or Greater
556
Additional Damages (Check All that Apply)
Are there any additional small damages
558
Bumper Smile
560
Overall Superficial Damage
562
Sharp Creases or folds in repair surface
564
Crushed Plastic
566
Tears in the Plastic
568
Gouged/Puncture
570
R & I Time 0.0
Add R&I Times
572
Repair Time Estimate For This Dent 2.5
Reset
Calculate Bumper Estimate
576

FIG. 14C

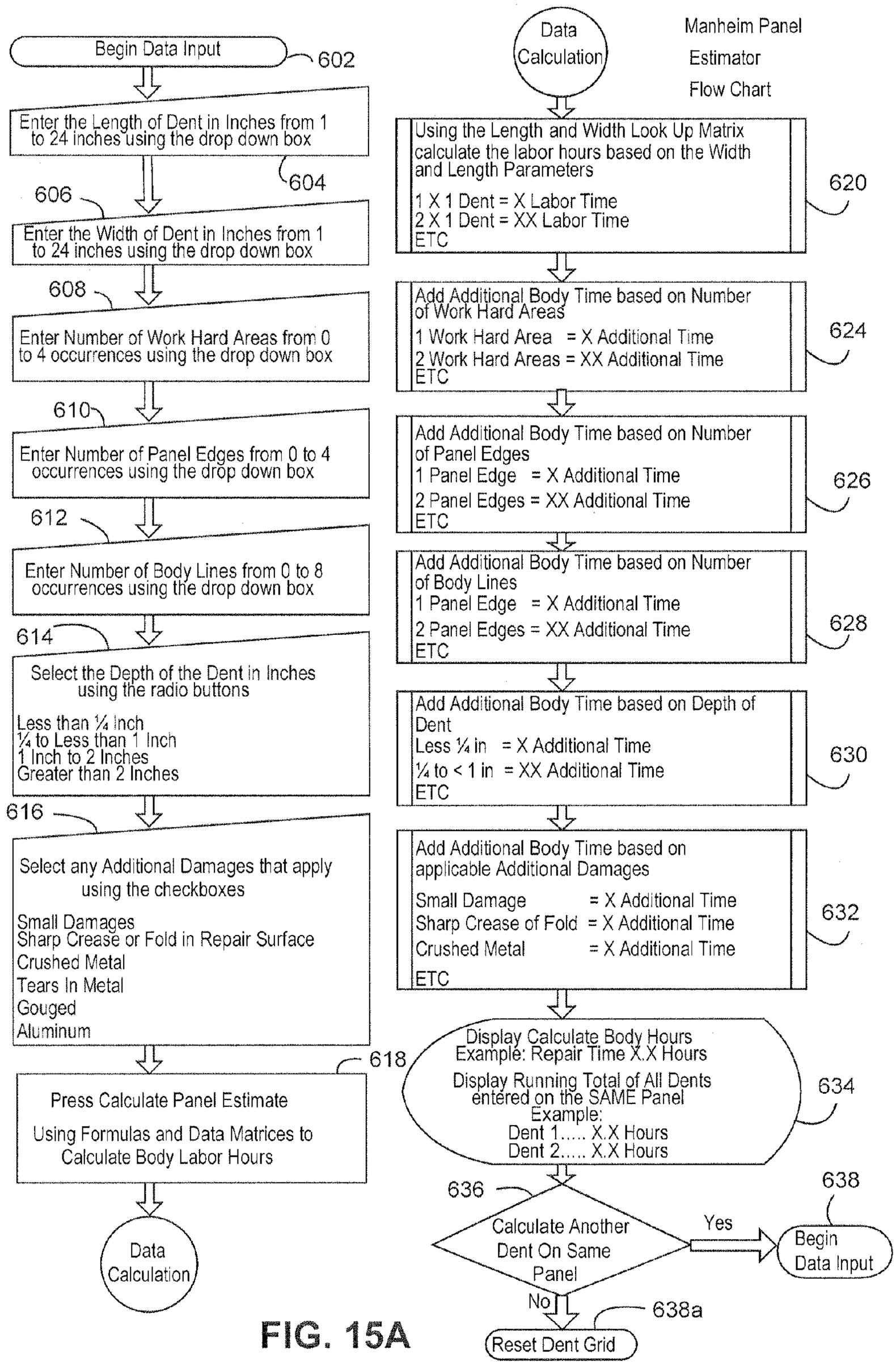
Begin Data Input
602
Enter the Length of Dent in Inches from 1 to 24 inches using the drop down box
604
606
Enter the Width of Dent in Inches from 1 to 24 inches using the drop down box
608
Enter Number of Work Hard Areas from 0 to 4 occurrences using the drop down box
610
Enter Number of Panel Edges from 0 to 4 occurrences using the drop down box
612
Enter Number of Body Lines from 0 to 8 occurrences using the drop down box
614
Select the Depth of the Dent in Inches using the radio buttons
Less than ¼ Inch
¼ to Less than 1 Inch
1 Inch to 2 Inches
Greater than 2 Inches
616
Select any Additional Damages that apply using the checkboxes
Small Damages
Sharp Crease or Fold in Repair Surface
Crushed Metal
Tears In Metal
Gouged
Aluminum
618
Press Calculate Panel Estimate
Using Formulas and Data Matrices to Calculate Body Labor Hours
Data Calculation
Data Calculation
Manheim Panel Estimator Flow Chart
Using the Length and Width Look Up Matrix calculate the labor hours based on the Width and Length Parameters
1 X 1 Dent = X Labor Time
2 X 1 Dent = XX Labor Time
ETC
620
Add Additional Body Time based on Number of Work Hard Areas
1 Work Hard Area = X Additional Time
2 Work Hard Areas = XX Additional Time
ETC
624
Add Additional Body Time based on Number of Panel Edges
1 Panel Edge = X Additional Time
2 Panel Edges = XX Additional Time
ETC
626
Add Additional Body Time based on Number of Body Lines
1 Panel Edge = X Additional Time
2 Panel Edges = XX Additional Time
ETC
628
Add Additional Body Time based on Depth of Dent
Less ¼ in = X Additional Time
¼ to < 1 in = XX Additional Time
ETC
630
Add Additional Body Time based on applicable Additional Damages
Small Damage = X Additional Time
Sharp Crease of Fold = X Additional Time
Crushed Metal = X Additional Time
ETC
632
Display Calculate Body Hours
Example: Repair Time X.X Hours
Display Running Total of All Dents entered on the SAME Panel
Example:
Dent 1..... X.X Hours
Dent 2..... X.X Hours
634
636
Calculate Another Dent On Same Panel
Yes
638
Begin Data Input
No
638a
Reset Dent Grid

FIG. 15A

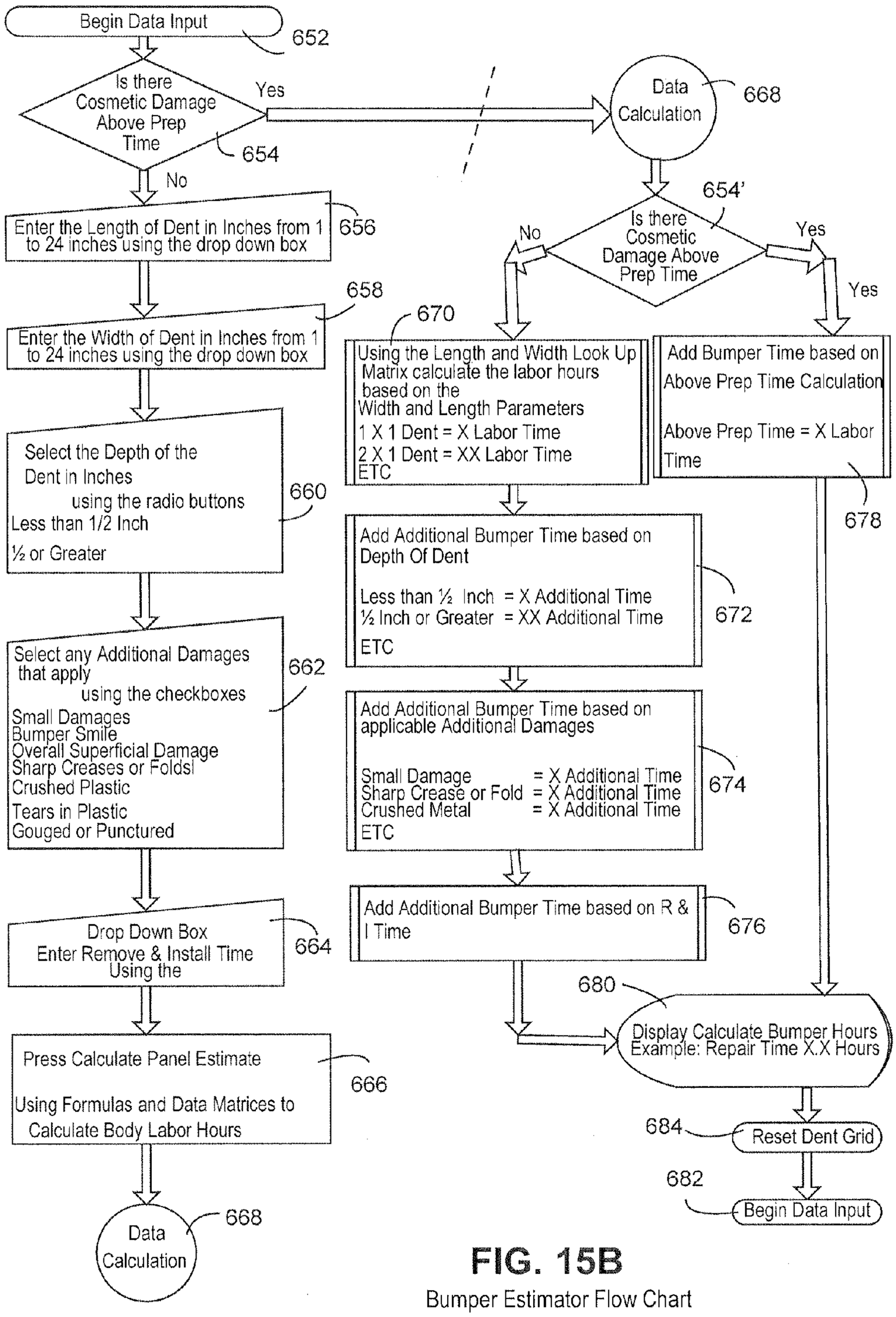

FIG. 15B

Bumper Estimator Flow Chart

COMPUTER-BASED TECHNOLOGY FOR AIDING THE REPAIR OF MOTOR VEHICLES

CROSS-REFERENCE TO RELATED APPLICATIONS

This application is a division of U.S. patent application Ser. No. 13/460,292 filed Apr. 30, 2012; which claims the benefit of U.S. Provisional Application No. 61/480,086 filed Apr. 28, 2011; and is a continuation-in-part of U.S. patent application Ser. No. 11/421,320 filed May 31, 2006, now U.S. Pat. No. 8,230,362 issued Jul. 24, 2012. The disclosures of the prior applications are incorporated herein by reference.

STATEMENT REGARDING FEDERALLY SPONSORED RESEARCH OR DEVELOPMENT

None.

FIELD

The technology herein relates to repairing damaged mechanical objects such as motor vehicles, and more particularly to automated computer systems and methods for assessing, estimating authoring repair of, and repairing damage to motor vehicles and other items. More specifically, the technology herein relates to portable and other computer device user interfaces and analysis systems and methods providing automatic vehicle inspection and damage assessment services, methods and apparatus for directing repair of motor vehicles. In more detail, the technology herein relates to automatic computer methods, systems and structures providing accurate objective determinations and/or calculations of time and/or cost to repair depression damage such as dents to goods including but not limited to motor vehicles.

BACKGROUND AND SUMMARY

In America, cars are not merely transportation; they are also aesthetic works of art and symbols of freedom, adventure and individuality. As a nation with many more cars than licensed drivers, we Americans love our cars. America's love affair with cars may be based on the size of our country, the independence of our people, our desire for mobility, or perhaps on our love of freedom. These characteristics, which set our country apart from others, have long made the motor vehicle and the open road central fixtures in our lives and our imaginations.

Many Americans make a statement with the car they choose to drive. Many of us are passionate about our cars. Texans love their pickup trucks and SUVs, and Vermonters love their Subarus. When certain cars drive down the street, everyone stops and turns their head. Car designers devote much energy to creating exciting, aesthetically pleasing body styles. One designer has observed that it costs no more to manufacture a car with a beautiful design. Car designers work very hard to develop three dimensional body lines and curves that are striking and pleasing to the eye. Body lines can also strengthen the structure of a car body, increasing safety and reducing weight and cost. Such beautiful car designs have captivated consumers for decades and helped fuel a major consumer industry.

Since most cars are not merely works of art but are also transportation subject to obstacles, traffic and driver error, they can be subjected to accidental damage. Many of us have

had the unpleasant experience of returning to our parked car to find that a careless motorist backed into our car or opened their car door in a way that caused body damage. Anyone who has ever accidentally backed into a pole or other obstruction or has been involved in a minor accident knows how disheartening it can be to subject a beautiful and finely crafted automobile to damage. Where before there was mirror-shiny clear coat, sleek lines and curves, there now is an unsightly scratch or dent.

Generally speaking, there is a well-defined process for making most kinds of mechanical repairs to motor vehicles, the list of replacement parts and supplies can be defined in advance, and most repair jobs of that particular type are similar. Often, standard charges may apply. As an example, the mechanic time for removing the engine cylinder head on a particular model of vehicle and replacing it with a reconditioned cylinder head can often be accurately estimated in advance. Similarly, reconditioning worn brake rotors and replacing brake pads is a standard operation, and it is easy for a repair shop to estimate how much time would be involved and the cost of replacement parts.

It is much more challenging to accurately estimate the cost and amount of time it will take to repair body damage to a motor vehicle and to then properly execute on such repair direction. The position, size, shape and severity of each dent on a car's body is unique. Any repair needs to be both structurally sound and aesthetically pleasing. For example, it is important when looking down the length of the vehicle that body lines are unbroken and undeformed. The smallest deformation on a body line can be easily noticed. While a range of standard techniques can be applied to repair dents and other body damage, due to the aesthetic considerations involved, authorizing repair of and properly repairing body damage is a craft that can be art as well as science.

One might think that the cost and amount of effort involved in pulling or hammering out or otherwise repairing a dent would merely depend on the size of the dent. However, it turns out that dents in some places on the vehicle are easier to pull out or otherwise repair than dents in other places. See e.g., FIG. **1** which shows a conventional example vehicle quarter panel **10**. The quarter panel **10**, as is well known, may be composed of steel, aluminum, fiberglass, plastic or other conventional material. It is cut out and stamped in a three-dimensional shape that allows it to fit easily and properly on a motor vehicle body to provide an aesthetically pleasing appearance as well as to protect the vehicle, tire and driver. The quarter panel **10** in this example includes a variety of relatively flat surfaces such as **12** and **14**. In addition, quarter panel **10** may include curved surfaces **16** as well as various body lines such as a belt line **24** and additional lines or creases **26**, **28**, **30**. These lines or creases affect the appearance, proportions and stance of the car and add to the strength of the panel. In particular, body lines, creases and bends in the metal of such a panel can add structural strength to the panel, allowing thinner metal to be used and thereby decreasing manufacturing cost, weight and environmental load while increasing fuel economy.

Still additionally, the example quarter panel **10** shown in FIG. **1** includes so-called "work hardened" areas **18**, **20**, **22** that comprise bent or worked metal. For example, complex shaped portions **18**, **20**, **22** are typically created by cold working or stamping the metal, which can, as is well known, lead to work hardening. Work hardening, also known as strain hardening or cold working, is the strengthening of a metal by plastic deformation. Auto body parts made of metal such as steel and aluminum when worked to create bend, contoured and/or curved aesthetically-pleasing surfaces

such as **18**, **20**, **22**, may be work hardened, strengthening the metal in the places where the metal was worked. Such strengthening by cold working or cold forming adds structural strength to the panel and can produce aesthetically-pleasing 3D surfaces that are stronger than unworked metal but which may become brittle and resistant to further plastic deformation. Damage to such work hardened areas can cause cracking, resulting in loss of integrity of the panel (e.g., cracking, holes, etc.) and can complicate any repair process. Thus, work hardened areas are usually more difficult to repair than flat areas. It can be appreciated from the FIG. **1** example quarter panel that the same point impact administered to different parts of the quarter panel may result in very different damage scenarios requiring different repair solutions that may be more or less time intensive and risky to the integrity of the structure.

Perhaps because of these uncertainties, producing estimates for body damage repair can be challenging. The cost of the same repair can vary radically depending on who you talk to. Three body shops may give three very different cost estimates for repairing the same dent. Insurance adjusters and fleet operators, on the other hand, need to be able to accurately and objectively estimate how much time it will take and how much it will cost to repair particular dents at particular positions on particular cars. It would also be highly desirable for computer-assisted technology to automatically recommend a particular method of repair (e.g., paintless dent repair).

The first step in assessing and estimating a repair is usually to perform a visual and other inspection. In the past, repair inspections were often performed manually using preprinted forms. An inspector would work from a form or check list on a clipboard as he or she visually inspected the item. Defects would be noted on the form. Sometimes, such forms would include schematic illustrations (e.g., line drawings) of the item being inspected so the inspector could note location and type of damage. Such forms could be mailed or transmitted electronically by facsimile or email. Damage assessments could be made by comparing information noted on the form with standard damage assessment information. In the case of motor vehicles, for example, the inspector or other person could consult a standard source to determine the fair market value of the vehicle based on the condition of the vehicle, the options installed and other factors. Unfortunately, because every dent is unique, it is rarely possible to obtain completely accurate dent repair times and costs merely by referencing a book or an historical database.

Yet, an important capability for any motor vehicle or other item assessor is to be able to accurately estimate the cost of repair and amount of time it will take to repair. As anyone who has ever taken a car to a repair shop knows well, being presented with a repair bill that is much higher than what the inspector or technician estimated at the beginning of the process is an unwelcomed surprise. Consumers are also unhappy when the repair is not done on time. On the other side of the coin, it is important for repair facilities to be properly compensated for their time and effort and be given enough time to complete the job. One cannot expect a good job if the body shop or other repair facility is forced to work too fast and/or at bargain rates. Body shops thus have a strong interest in providing accurate cost estimates. Estimating too high can cause the consumer to go elsewhere. Estimating too low can mean the price may not be enough cover the cost of repairs and the shop could lose money on the job. Inaccurately estimating how much time it will take or what will be involved in making a repair can leave everyone dissatisfied.

In most body shops, a well-trained estimator makes an appraisal of the vehicle damage and determines what must be done to repair the vehicle. Generally, this person must be well versed in how cars and trucks are made and repaired, and be good with numbers, computers and communicating with people. Computers are often used to streamline estimating and parts identification and ordering. See e.g., Duffy, Auto Body Repair Technology (4th Ed. 2003). Nevertheless, accurately estimating the amount of labor involved in making a particular repair has in the past relied heavily on the experience and expertise of the human estimator.

The problem is compounded by the variety of different techniques including paintless dent removal that have been developed to repair dents and other body damage. Some techniques may be right for some dents but not others. Some jobs require parts to be removed while other types of damage can be repaired in place. While an experienced body shop can often provide a good cost and labor estimate, inspectors who have never worked in a body shop may have difficulty accurately estimating what it will take to repair particular dent damage. Yet, having to get a separate estimate from one or more body shops or other estimators may take too much time or otherwise be inconvenient, especially in fleet or auction environments where time and efficiency are important. Additionally, it is useful to employ objective rather than subjective standards for assessing damage and recommending necessary repair procedures, costs and work time.

Some in the past including the assignee have proposed to use computers and computer systems to gather automobile inspection information and assess damage. See for example US 20070293997. Various systems and techniques have been developed. However, further improvements are possible and desirable. In particular, it has been found to be a challenge in the past to apply objective standards to what some treat as a subjective, highly experiential process for estimating what it will take to repair depression type damage to items including but not limited to body portions of motor vehicles.

One example non-limiting technology uses programming and data based in part on a significant amount of time and effort analyzing case studies in order to isolate and distill an optimal set of criteria. Such automatic computer-assisted technology can prompt an inspector in a structured manner through a user interface to input such criteria (e.g., by presenting a series of questions with structured possible answers for user selection) to enable a data processing system to automatically, objectively estimate the time and cost involved in repairing dents and other depression damage and the like. The system automatically takes into account that while size (length and width) of the dent are important, there are other objectively observable factors (e.g., number of work hardened areas, number of panel edges, number of body lines in dent, dent depth, and other adjustments) that together can be used to automatically enable a very accurate assessment and calculation of what should be done and how much time it will take for a skilled body repair technician to repair a particular dent.

Exemplary illustrative non-limiting implementations provide a data processing system including non-transitory memory storing an integrated software suite and/or operative as a standalone module or application that provides or assists with vehicle inspection or other damage assessment. One exemplary illustrative non-limiting implementation includes an inspection application that runs on for example a desktop, laptop, or pen-tablet PC's; a centralized server application that handles data synchronization between the database and the inspection PC's; additional systems to

handle reporting and data transfer; and a web front end to allow clients to view vehicle inspection results on the Internet.

Example Seller Grade

Additional example technology enhances the capture of a vehicle's overall condition by improving the current damage values, and adding a new seller grade. The Seller grade can be leveraged at an auction or other live sales environment for simultaneously or simulcast display, and the interface can be robust enough to be used by for quick inspections inside the auction gate.

In one example embodiment, Seller grade may provide the ability to add additional damage information in order to calculate a grade for the vehicle. Based upon the damage information entered by the dealer, a Seller Grade can be provided. The Seller Grade can be rounded to half numbers for example. The example non-limiting system can provide a vehicle grade, and utilize the grading algorithm in a manner that can be used by other industry vendors and clients. One example non-limiting feature provides an external facing Webservice that allows the passing of predetermined information that calculates and returns a vehicle grade.

BRIEF DESCRIPTION OF THE DRAWINGS

These and other features and advantages will be better and more completely understood by referring to the following detailed description of exemplary non-limiting illustrative implementations in conjunction with the drawings of which:

FIG. **1** shows an example prior art quarter panel;

FIG. **1**A shows an exemplary illustrative non-limiting motor vehicle inspection scenario;

FIG. **1**B shows an exemplary illustrative non-limiting touch screen based inspection input appliance;

FIG. **1**C is a flowchart of an exemplary illustrative non-limiting overall inspection process;

FIGS. **1**C-**1**, **1**C-**2** is an example prior art condition report;

FIG. **1**C-**3** is an example of a seller grade condition report;

FIG. **2** shows an exemplary illustrative non-limiting block diagram of an inspection system architecture;

FIG. **2**A shows an exemplary illustrative non-limiting block diagram of an inspection input appliance, in this particular non-limiting instance a portable tablet computer including a touch screen;

FIG. **2**B is a flowchart of an example body style group classification process;

FIG. **2**C is a schematic illustration of an example illustrative non-limiting hierarchical parts data organization;

FIG. **3**A shows example illustrative non-limiting stylized, top-down, 'flattened' views of vehicle body style groups;

FIG. **3**B shows example illustrative non-limiting images portraying interior views of different vehicle types;

FIG. **3**C shows an exemplary illustrative non-limiting coordinate map for a four-door sedan exterior image;

FIG. **4** shows an exemplary illustrative non-limiting use of a coordinate map to show the user hovering over the right front door area on the four-door sedan image;

FIG. **5** shows an exemplary illustrative non-limiting implementation of a displayed dialog window that allows the inspector to enter a damage record for either portions of a hierarchical set of parts;

FIG. **6** show an exemplary illustrative non-limiting set of database records representing a combination of part, damage, severity, action, and (optionally) special condition;

FIGS. **7**, **8**, **9**, **10** & **11** show an exemplary illustrative non-limiting sequence of user interface screen displays for use in inputting damage or other characteristic information;

FIGS. **12**A-**12**E are exemplary illustrative non-limiting damage entry screens;

FIGS. **13**A-**13**C show example panel damage user interface screens;

FIGS. **14**A-**14**C show example bumper damage user interface screens;

FIG. **15**A shows an example panel estimator flow chart; and

FIG. **15**B shows an example bumper estimator flow chart.

DETAILED DESCRIPTION

FIG. **1**A shows one example illustrative non-limiting inspection scenario and system that the exemplary illustrative non-limiting technology can be integrated into. In the FIG. **1**A example, an inspector **50** uses a portable computer-based inspection appliance **54** having a touch or other display screen **56** to inspect a motor vehicle **52**. The motor vehicle **52** can be any type of motor vehicle such as for example a passenger car, a light truck, a heavy truck, construction equipment, a motorcycle, a boat or other watercraft, an airplane or other aircraft, or any other type of motor vehicle. The technology herein is not limited to motor vehicles, but can be applied to any type of item requiring inspection or other examination to isolate and detect flaws, defects, damage, features, options, or any other physical or other characteristics—and in particular dents.

In the FIG. **1**A example shown, a human inspector **50** is physically present at the site of the motor vehicle **52**. The inspector **50** visually inspects the motor vehicle **52** for features and damage. Such inspection can in one non-limiting implementation be relatively comprehensive and include or provide for example information concerning any or all of the following:

Exterior:
- Frame or structural damage due to collision
- Collision repairs that are below industry standards
- Significant dents, dings, and scratches in body, bumper, elsewhere including detailed assessment of how to repair them, how much it will cost and how much time it will take
- Missing or broken components including glass and mirrors
- Operation of exterior lighting
- Abnormal wear and condition of tires (includes spare)
- Document tire size, brand and amount of tread remaining on each tire
- Significant damage to wheels and/or hubcaps
- Other

Interior
- Document all accessories
- Verify proper operation of all factory equipment
- Significant damage to seats, carpets, headliner, sun visors, trim pieces, dash and console areas
- Missing or broken items
- Evidence of flood or water damage
- Other

Chassis
- Damage or wear to exhaust system, steering system, shock absorbers, struts and CV boots
- Transmission, differential or power steering leaks
- Evidence of frame or structural damage due to collision
- Other

Engine

Significant oil or coolant leaks
Condition of fluids
Belts and hoses for wear or need of replacement
Serious mechanical problems indicated by abnormal noises, evidence of overheating, poor running condition or exhaust smoke
Missing or damaged components
Other

In the exemplary illustrative non-limiting implementation, a computer-based handheld inspection input appliance **54** may guide human inspector **50** in conducting the inspection and/or the appliance may collect and record the inspection data by receiving inputs from the human inspector. In the example shown, the input device **54** can be small enough to hold in one or two hands, allowing the inspector **50** to carry the device with him or her as the inspector walks around the vehicle, steps inside the vehicle, and crawls beneath the vehicle. The input device **54** may, as detailed below, be equipped with one or more cameras to capture images of the vehicle including damaged areas. Such images can be automatically analyzed in some embodiments to automatically ascertain parameters concerning the type and extent of damage. Such automatically-sensed damage parameters can be used to supplement additional information the inspector **50** manually inputs into the input device **54**.

In one exemplary illustrative non-limiting implementation, input device **54** is equipped with a touch screen **56** that displays information for inspector **50** to see, and also allows the inspector to input information graphically, through gestures and by other means. For example, the inspector **50** may use a stylus or a finger to actuate virtual buttons displayed on touch screen **56**, draw or otherwise indicate graphical information, or perform other data input operations. The use of a handheld touch screen based tablet computer for inspection appliance **54** is a non-limiting example—other inspection appliance configurations might include for example personal digital assistants, laptop computers, desktop computers, wearable computer(s), cellular telephone type devices, or any other portable or non-portable electronic device capable of receiving, processing, storing and/or presenting information. Pointing or other menu or data selection may be accomplished by a computer mouse controlling a cursor, touch screen pointing and gestures, a stylus, or any other conventional or convenient means.

In the exemplary illustrative non-limiting implementation, the inspection appliance **54** provides a graphical user interface (GUI) that is easy to use and guides the inspector **50** through the inspection process. This graphical user interface may, in the exemplary illustrative non-limiting implementation, be customized based on who the inspection is being performed for, the purpose of the inspection, and/or other factors. For example, inspections performed for vehicles coming off long term lease may be different from inspections performed by car rental companies to determine possible damage during daily or other short term leases. Similarly, different fleet operators may have different inspection needs and requirements. Inspections performed for motor vehicles **52** that have been repossessed may have different requirements from those vehicles that were traded in at a dealership and remarketed. The exemplary illustrative non-limiting inspection appliance **54** may store various different inspection rules and profiles, and use them to customize the process flow, dialogues and other aspects of the displayed or otherwise presented user interface to guide inspector **50**.

An example non-limiting process for conducting an inspection is detailed below. Once the inspector **50** is finished with an inspection, the inspection appliance **54** may validate the inputted information for internal consistency and/or compliance with rules. The inspection appliance **54** may, for example, warn the inspector that he or she has forgotten certain information or has entered it incorrectly. Such inspection validation procedures may save time (the inspector does not have to return to re-inspect the vehicle) and/or ensures more complete and accurate information.

The inspector **50** can use a digital camera or other imaging device to capture images of the vehicle **52** being inspected. Such a digital camera or other imaging device can be connected to (or may be an integral part of) inspection appliance **54**. Inspection appliance **54** can store such captured images (e.g., of dent damage) along with other collected inspection information.

Inspection appliance **54** may include a damage or value calculation function that automatically compares the condition of vehicle **52** with internally stored standards. For example, the inspection appliance **54** may contain a fair market "blue book", Mitchell Collision Estimating & Reference Guide and/or other valuation data as well as algorithms for discounting or enhancing valuation based upon damage, options or other characteristics. Inspection appliance **54** may generate a condition and/or report estimating how much it will cost and what it will take to repair, that can be displayed on touch screen **56**, transmitted to a printer or other rendering means via wireless or wired connections, or otherwise stored and/or presented.

In one exemplary illustrative non-limiting implementation, a portable inkjet or other printer may be connected to the inspection appliance **54** (and/or may be integral with it) to provide a written inspection report. In other example implementations, 802.11 WIFI or other wireless or wired connectivity can be used to communicate collected inspection information from the inspection appliance **54** to other nodes or locations such as a remote processing system including a non-transitory storage device storing a database.

Example Portable Inspection Appliance

FIG. **1**B shows one example illustrative non-limiting handheld inspection input appliance **54** including a touch screen **56**. Inspection appliance **54** may comprise, for example, a conventional commercially available tablet computer such as an iPad including a handheld, portable housing **58** containing an internal battery operated power source. The internal battery power source may be replaceable and/or rechargeable. Such a handheld portable inspection appliance **54** may include, in addition, user input controls **60** such as for example, buttons, knobs, keys, keyboards, directional controls, microphones and/or other input devices. A stylus **62** can be placed in contact with the touch screen **56** to indicate positional information. The inspection appliance **54** may provide corresponding visual feedback in response to stylus **62** or finger positioning including, for example, color changes, gesture tracing, dialogue boxes and other visual, aural and/or other feedback. In one exemplary illustrative non-limiting implementation, inspection appliance touch screen **56** may display textual information, graphical information, or a combination of textual and graphical information.

In the particular non-limiting example shown, the touch screen **56** is displaying schematic graphical line drawing type illustrations **64** of several different motor vehicles. The inspector **50** can select an appropriate line drawing by, for example, marking a selection bubble **66** using stylus **62**, or the appropriate line drawing can be selected and automati-

cally displayed based on vehicle identification number decoding (described below) or other input. Inspector **50** may also indicate location of dents, scratches and other damage by placing the tip of stylus **62** onto a corresponding location on the displayed schematic illustration **64**. Inspection appliance **54** can provide visual and/or aural feedback, and may collect information in a variety of other ways including for example voice logging, image capture, automatic scanning or any other desired means.

The exemplary illustrative non-limiting inspection appliance **54** may include a bidirectional port **68** for use in communicating information via the outside world. Port **68** may comprise a wireless adapter (such as WIFI, WLAN or any other radio or other wireless based connection), a wired connection such as a modem, Ethernet network interface card, a parallel or serial data connector, or any other means of communicating electrical or electronic signals. Port **68** in the exemplary illustrative non-limiting implementation is used to both input information to the inspection appliance **54** and to communicate information collected by the inspection appliance to the outside world.

The FIG. **1**B configuration for appliance **54** is one non-limiting example—any other desired portable or non-portable computing device configuration can be used instead or in addition. For example, a smart phone, an IPAD, a desktop, a tablet computer, or any other suitable computing platform with input/output/display capabilities may be used. Computation capabilities can be local, remote or a combination. In some configurations, appliance **54** may comprise a simple "dumb" terminal or thin client type device comprising an input means, a display means and a communication means. In other configurations, appliance **54** may comprise a complete, self-sufficient standalone computing device with internal processing, storage, communication and other capabilities. Hybrid or distributed computing implementations are also possible.

Example Inspection Process

FIG. **1**C is a flowchart of an example inspection process. At the beginning of a work period, human inspector **50** connects appliance **54** to a network (to be described below) to receive a download including workflow, software updates, rules updates and other information (blocks **70**, **72**). The workflow may include for example a schedule of cars to inspect for which client at which locations. The inspector **50** may now, in some exemplary illustrative implementations, disconnect appliance **54** from the network (block **74**) and take the appliance to the site of a vehicle **52** to be inspected (block **76**), or the information can be wirelessly accessed and downloaded in real time on demand.

At the inspection site, the inspector **50** may input the vehicle identification number (VIN) into appliance **54**. Such a VIN may be input (manually, via bar code recognition using a camera mounted on device **54**, etc.) based on an "add new work" request that inspector **50** commands appliance **54** to perform—which may start a "wizard" that automatically takes the inspector through various steps including for example specifying location (e.g., can prompt for auction or vehicle location), input VIN (which will be decoded to figure out what kind of vehicle, etc.). The appliance **54** can in some non-limiting examples automatically decode the VIN in the exemplary illustrative non-limiting implementation to determine the type (make, model) of vehicle (e.g., SUV, passenger car, light truck, etc.), or such information can be manually inputted. The previously downloaded workflow information also specifies which inspection client the inspection is being performed for if applicable. Based on this information (as well as potentially other information), the inspection appliance **54** automatically determines, based on previously downloaded/stored rules and a "rules engine", what inspection protocol and workflow to follow.

The inspector **50** then typically performs a relatively rigorous inspection of the vehicle **52**. Such inspection can include, for example, standing at the left front fender and looking down exterior of the car at a shallow angle to see dents, scratches and other defects. The inspection **50** may also, for example, "walk" the entire car, looking for dents and other imperfections from every angle (including the roof). This procedure allows the inspector **50** to have a general overall view of car to detect any collision or other damage.

The inspector **50** typically also conducts a much more detailed inspection—for example, getting down on his hands and knees and looking for undercarriage damage, axle, wheels, etc. Part of this inspection process in the example implementation involves carefully observing and measuring characteristics of depression type damage such as dents in body panels, bumpers, etc. Each time the inspector **50** finds damage, he inputs it into the inspection appliance **54** by use of touch screen **56**. As the inspector **50** walks around the car **52**, he uses the stylus or his finger to touch the touch screen of appliance **54** to interact with the internal executing software and input damage information. The inspector **50** also notes options on the car and inputs this information into the appliance **54**. The inspector **50** then opens the door of the vehicle, and carefully inspects the interior of the car, using appliance **50** to note all interior options, and damage (e.g., including color, cleanliness, odors, etc.).

During the inspection or once the visual inspection is complete, inspector **50** uses a digital camera to photograph the vehicle (block **84**). Such photographs can include for example odometer, VIN plate, trunk, actual damage including dents, and any other desired views (in one non-limiting example, which photos the inspector takes can be client-specific based on what the client wants). The inspector **50** may connect the digital camera to appliance **54** (or use a camera embedded in the appliance) and use embedded software to assign the photos to correct image locations in a draft condition report the appliance is preparing.

In the exemplary illustrative non-limiting implementation, appliance **54** may then validate the inputted information (block **86**)—generating any exception warnings if the inputted inspection information is incomplete or inconsistent. The appliance **54** may also calculate a value for the inspected vehicle **52** based on stored valuation information (block **88**).

Appliance **54** may also assign the vehicle an overall "grade" (block **89**) based on a rules engine—with grading rules being customized based on who the inspection is being prepared for, the type of inspection, or other factors. In more detail, commonly-assigned U.S. patent application Ser. No. 11/421,320 filed May 31, 2006 discloses an AutoGrade feature that, when executed by an automatic inspection system, automatically assigns a grade to the vehicle being inspected. Such AutoGrade service may pass an Item, Damage, Severity, and Action field from a Condition Report. Based upon the combination of these 4 items, a pre-specified amount of grading points are assigned and calculated to achieve a total. This point total is then matched to a grading table to determine a final AutoGrade. Such an AutoGrade quantity is useful in providing a quantized, easy-to-understand numerical parameter indicating overall vehicle condition. See Table I below:

TABLE I

2 Character Numeric Grade	Block Summary 3 Character Numeric Grade	Definition
50	5.0	Extra dean
49	4.9	Clean
48	4.8	Clean
47	4.7	Clean
46	4.6	Clean
45	4.5	Clean
44	4.4	Clean
43	4.3	Clean
42	4.2	Clean
41	4.1	Clean
40	4.0	Clean
39	3.9	Average
38	3.8	Average
37	3.7	Average
36	3.6	Average
35	3.5	Average
34	3.4	Average
33	3.3	Average
32	3.2	Average
31	3.1	Average
30	3.0	Average
29	2.9	Below Average
28	2.8	Below Average
27	2.7	Below Average
26	2.6	Below Average
25	2.5	Below Average
24	2.4	Below Average
23	2.3	Below Average
22	2.2	Below Average
21	2.1	Below Average
20	2.0	Below Average
19	1.9	Rough
18	1.8	Rough
17	1.7	Rough
16	1.6	Rough
15	1.5	Rough
14	1.4	Rough
13	1.3	Rough
12	1.2	Rough
11	1.1	Rough
10	1.0	Rough
0	0.0	Extra Rough

NOTE:
Anythingless than a 1.0 is considered a 0.0

The inspection system can be programmed to similarly provide a parameterized grade to the vehicle for purposes of seller grade in sales environments such as auctions. The seller grade purpose may be somewhat different than for other users of AutoGrade, so the type of grade that would be useful for seller grade may be somewhat different than what might be most optimal for other purposes. For example, the inspection can be performed by the seller himself and can be quicker and the precision of the parameter provided could be decreased to provide a simpler quantity rounded to whole numbers as shown below:

Example Seller Grade		
2 Character Numeric Grade	3 Character Numeric Grade	Definition
46 to 50	5.0	Extra Clean
41 to 45	4.5	Clean
36 to 40	4.0	Clean
31 to 35	3.5	Average
26 to 30	3.0	Average
21 to 25	2.5	Below Average

-continued

Example Seller Grade		
2 Character Numeric Grade	3 Character Numeric Grade	Definition
16 to 20	2.0	Below Average
11 to 15	1.5	Rough
6 to 10	1.0	Rough
0 to 5	0.0	Extra Rough

To provide such a seller grade, a configuration for use with the handheld **54** inspection application described above contains a list of questions that are automatically presented to the inspector on the touch screen **56** for completion. In this case, the inspector might be inside the gate of an automobile auction facility, and use the inspection system described above to perform a quick but accurate inspection for purposes of seller grade. In such environments, potential purchasers of the vehicle or their agents are often (but not always) on site and so can inspect the vehicle for themselves. Accordingly, one purpose of a "seller grade" inspection is to ensure that the seller has apprised potential purchasers of basic defects and condition to protect the seller in the event a buyer has buyer's remorse and wishes to renege on the purchase agreement. In other contexts, the seller may wish to go further and disclose detailed information about the condition of the vehicle so the purchaser is fully informed irrespective of his own ability to inspect the vehicle (e.g., in online or remote purchasing opportunities where the buyer is not on site and is unable to inspect the vehicle himself).

In one example implementation, an AutoGrade mapping table converts the damage inputs the inspector provides using handheld input appliance **54** to damage information that can be used for grading. The Seller Grade can utilize the same basic application logic described in the prior patent application noted above to calculate the Seller Grade. An additional computerized service is also provided between the party passing in information and information that is being passed into the current AutoGrade service. This new service accepts the Item, Damage, and Severity from an outside source, and then maps it to an Item, Damage, Severity, and Action, which will then be passed into the AutoGrade service. Based upon the data provided, the AutoGrade Service sends a grade back which will then be rounded up or down, based upon pre-determined Seller grading parameters. Once this grade is determined, it is then passed back to the outside source.

To provide such functionality, a configuration for the mobile inspection application contains a list of grading questions that the inspector needs to complete. Such a standardized data collection process can be called the Mobile Inspector App (Mi). This application guides a user through a virtual walk around of a vehicle using simple on-screen instructions and a detailed, pre-defined and customized process, resulting in data collection.

In addition, the system uses an AutoGrade mapping table to convert the damage inputs from handheld touchscreen device **54** to damage information that can be used for grading.

The process can for example start one of three ways:

1. The dealer can create a Seller grade using a handheld application on handheld device **54**

2. A third party vendor assigned by the dealer can create a Seller grade using the handheld (or other) application

3. An inspector inside the gate of an auction can create a Seller grade using the handheld (or other) application

In one example non-limiting implementation, there are 3 types of Seller grades Available:

1. Basic: Frame Damage or Prior Paint—No Seller Grade will be generated

2. Enhanced: Seller grade will be displayed based upon limited data

3. Detailed: Seller grade will be displayed based upon detailed data.

Once the Seller grade is completed in the handheld application by an inspector, the seller himself, or another person such as an auction employee, the handheld application calls a Webservice on an external server and passes in all the Item and Damage combinations. The Webservice maps these combinations to valid values and passes this data to the AutoGrade service. The Webservice will then accept the grade back from the AutoGrade service and round the grade prior to passing it back to the handheld application. The handheld application will include the grade on the report(s) outputted at the conclusion of the inspection process (see FIG. **1C-3** for an example condition report). A bulk upload process can be used that accepts a CSV or other formatted file which is updated to accept a grade.

One example implementation utilizes the Item and Damage portion of this information, and lists all Severity's as NULL. This example non-limiting implementation uses a mapping table that only contains Item and Damage to be mapped to an Item/Damage/Severity and Action table which will then be passed to AutoGrade. While this particular handheld application uses the Item and Damage combination to determine a seller condition grade, other example implementations may require an Item, Damage and Severity (or other) combination so this service is built to accept all three parameters.

Major components of the example implementation include:

an external facing Webservice that will allow the passing of predetermined information that will in turn allow a remote processor to calculate and return a grade.

a Mapping Table/Service that contains Item, Damage and Severity fields to be mapped to an Item/Damage/Severity and Action values which will then be passed to AutoGrade.

An authentication functionality in order to verify request from the handheld device that will be used to tell the service which data mapping will be used

A generic authentication functionality to be used if future applications other than handheld device use this application.

An example Mapping Table contains vendor, Item, Damage and severity fields to be mapped to an Item/Damage/Severity and Action value which will then be passed to AutoGrade. Such a table may have the following values:

Vendor
Item
Damage
Severity
AutoGrade Item Description
AutoGrade Item code
AutoGrade Damage Description
AutoGrade Damage Code
AutoGrade Severity Description
AutoGrade Damage Code
AutoGrade Action Description
AutoGrade Action Code

In one example implementation, all Seller grade damage combinations are mapped to a single AutoGrade combination based on vendor value. In this example implementation, the Seller grade damages need not be valid AutoGrade damages and need to be mapped, one-to-one, to valid AutoGrade values in order to correctly calculate a grade. This mapping is done in a table to allow for easy maintenance. A web service between the current AutoGrade service and the Seller grade application maps the damages supplied by the Seller grade to valid AutoGrade values, pass these into the AutoGrade service and then return a 'seller grade' back to the Seller grade application. Such a webservice to map damage entries may:

Provide service to accept condition information via web service call

Utilize mapping table to determine the AutoGrade records mapped to each condition

Call the AutoGrade web service and pass in valid AutoGrade damage values

Consume the AutoGrade from the service and return the grade to the requestor.

To implement such an arrangement, the ability to pass mapped values into the AutoGrade Service is provided. Software is also provided with the ability to round the Grade using a grade rounding table based on the table above. In one implementation, the ability is provided to pass the grade to the external Client/Vendor; authenticate functionality in order to verify request from vendor that will be used to tell the service which data mapping will be used; monitor to alert appropriate personnel if the webservice is not functioning; and provide an XML error message to be returned to the requester if an Item/Damage/Severity combination(s) is passed into the service and is not in the mapping table (error details the I/D/S that is in error).

Additionally, in one exemplary illustrative non-limiting implementation, appliance **54** (with our without the assistance of a wirelessly-connected remote processing system) is able to calculate an accurate damage assessment and associated estimate of amount of time and/or cost of repairs for the vehicle **52** being inspected (block **89***a*). For example, during the "inspect vehicle" step **82**, appliance **54** may collect detailed damage information from inspector **50** of the severity and other characteristics of particular damage the inspector discovers on the vehicle **52**. In one exemplary illustrative non-limiting implementation, appliance **54** can inquire from inspector **50** certain specific information about dents in motor vehicle **52** including for example:

the length/width of the dent,
the number of work hardened areas,
the number of panel edges,
the number of body lines in the dent,
the depth of the dent, and
additional damages such as sharp creases or folds, crushed metal, tears, gouges,
whether the metal is aluminum,
Other items.

Appliance **54** may then use this detailed information to accurately automatically calculate the estimated repair time, part pricing, and other aspects for repairing the dent or other defect or damage. Prevailing body shop or other hourly rates may then be applied to accurately automatically assess the cost of repairing the damage. Such objective assessment may allow even inspectors inexperienced in estimating body or other damage to develop, with the aid of appliance **54**, an automatic, objectively arrived-at, accurate damage assessment and repair cost.

The appliance **54** may generate a condition report (see FIGS. **1C-1** and **1C-2** for an example prior art condition report) (block **90**) which may be printed by an internal or external printer if desired and/or delivered electronically

(the inspection reported actually delivered by the automated system can be much more detailed in terms of dent and other damage estimation, as will become clear below). At that time or some later time, the inspector again connects appliance **54** via wire or wirelessly) to the network to upload the inspection report and other collected information (block **92**). Appliance **54** keeps track of which inspection results it has not yet uploaded, and supplies those over the network in the form of a "data synch." Such uploaded condition report information can be made available over the Internet or otherwise for viewing by the client (all inspections for a particular client obtained from all inspection appliances **54** can be aggregated and organized for easy access and display). The data synch can be two-way—i.e., the appliance **54** uploads harvested inspection information and downloads new work assignments, new rule updates, and other information. In some exemplary illustrative implementations, wireless means is used to continuously connect appliance **54** to a data network so that data synchronization can be carried on periodically or continually.

Example System Architecture

FIG. **2** shows an exemplary illustrative non-limiting overall computer system architecture **100** used to interact with inspection appliances **54**. A network **102** conveys information to and from appliances **54**. Network **102** can for example allow inspection appliances **54** to communicate with a computer **104** coupled to a non-transitory storage device **106** storing a database. The database stored on storage device **106** may store information including but not limited to client rules **106***a*, damage valuation data **106***b*, application software updates **106***c*, inspection schedules **106***d*, inspection reports **106***e*, and other information. Computer **104** (which may for example comprise or include a SQL, Oracle or other database server in one exemplary illustrative non-limiting implementation) downloads data from the database stored on storage device **106** to requesting inspection appliances **54** and uploads information from the inspection appliances **54** to the stored database. Network **102** may provide constant, periodic, occasional and/or infrequent connection between computer **104** and appliances **54** depending on need for timeliness. In one exemplary illustrative non-limiting implementation, network **102** may comprise or include a bank of modems and/or Internet routers communicating using TCP/IP or any other desired communications protocol(s). Any wireless or wired networking capabilities may be used as desired.

FIG. **2** further shows a web server **108** coupled to access the database stored on storage device **106** (or a mirrored copy of same). Web server **108** allows remotely located web browser clients **108***a*, **108***n* to access and display or otherwise process inspection reports **106***e* and/or other information stored within the database via network **102**.

Example Appliance Architecture

FIG. **2**A shows an exemplary illustrative non-limiting architecture for handheld inspection input appliance **54**. A processor **202** may be used to control display screen **56** and receive inputs from a touch-sensitive portion **204** of the screen. Processor **202** may also receive input from input devices **60** and/or network interface **68**. Processor **202** may also access and store information maintained on a mass storage device **206**, such information including client rules **206***a*, valuation data **206***b*, client application software **206***c*, inspection report generation **206***d*, an image or photo database **206***e*, inspection report and other data **206***f*, and other information. In the exemplary illustrative non-limiting implementation, processor **202** executes client application software **206***c* (typically but not necessarily under control of an operation system not shown) to perform the various functions described below.

As shown in FIG. **2**A, an internal or external digital or other camera **208** may be used to capture images of inspection items for storage into image database **206***e*. A locally or remotely attached printer **210** may be used to print hard copies of inspection reports and other data **206***f*. Other peripheral devices including webcams, audio and sound cards, projection capabilities, laser or other scanners, or any other type of peripheral could be used.

Example Overall Inspection Method

The exemplary illustrative non-limiting system is designed to be easy to use by vehicle inspectors. Vehicle inspectors are not necessarily computer experts, so the system is intended to be easy to learn and use by non-technical users.

When an inspector wishes to note that a particular vehicle part is damaged (FIG. **1**B block **82**), his/her (hereafter, simply 'his') first task is to pick the proper part in the inspection system that corresponds to the part on the vehicle that is damaged.

The first step in the algorithm is the identification of the vehicle's body type. This is accomplished through the use of decoding the VIN inputted at FIG. **1**B block **78**. In the exemplary illustrative non-limiting implementation, the first eleven characters of a VIN utilize an encoding scheme that can be decoded to provide information about the vehicle. One attribute that can be decoded in this way is the body style code of the vehicle. This process prevents inspectors from accidentally entering damages on parts that would make no sense in the context of a given vehicle style. For example, in one non-limiting implementation, the inspector cannot accidentally input a damage record for a pickup tailgate while inspecting a four-door sedan.

An illustrative exemplary non-limiting implementation includes a database and software algorithms capable of storing and enforcing customer criteria programmatically. Using these tools, new trainee inspectors can produce inspection reports that meet the client's or other criteria as closely as inspections performed by users with years of experience.

A database is provided on appliance **50** in connection with a rules engine **206***g* in which each record represents a combination of part, damage, severity, action, and (optionally) special condition(s) that are valid for a given client or application, as illustrated in FIG. **6**.

Example integration of this data into the software system is illustrated in FIGS. **7**, **8**, **9**, **10** and **11**. First the inspector uses the flat car interface to select the damaged part as described above, in this case, the windshield (see FIG. **7**). When the user clicks the mouse in the highlighted windshield area, the damage entry dialog box appears (see FIG. **8**). The user then selects the large button labeled "Damage" (see FIG. **8**). The list of damages allowed for a windshield is displayed (See FIG. **9**). The user then selects the correct damage type. In this case the user is asked to select between particular mutually-exclusive damage descriptions: broken, bull's-eye, chipped, cracked, graphics present, multiple chips, multiple scratches, scratched. Once the user has selected a damage description (e.g., "bull's-eye"), the user then clicks the large button labeled "Severity" (see FIG. **10**). The list of severities that are permissible for the part/damage combination and damage description is displayed (see FIG. **11**). The user then selects the correct severity (e.g., ½" or less, or more than ½", as one particular example). If there were multiple corrective actions that would be allowed for

part/damage/severity combination, then that list would be displayed. However, in this case there is only one allowable action, so the "Action" field is automatically filled with the only choice—in this case "replace" (see FIG. **11**). Note that each of these various options is fully customizable on a client-by-client, vehicle-by-vehicle and/or inspection type basis to provide different criteria for different inspection clients, inspection types, vehicles and other factors.

This illustrative non-limiting exemplary approach provides several advantageous features including the following:

- The user can be prevented from selecting combinations of parts and damages that do not make sense, "Rusty Windshield" for example.
- The user can be restricted to list only those damages that interest the client or produce a relevant output.
- The user can be restricted to pick only repair actions that have been approved for use by the client or that make sense.
- The user can be focused to be concerned with severities that identify threshold levels as defined by the client or otherwise.
- The user does not have to memorize complicated rules for determining whether damages are chargeable.

Repair Labor and Cost Estimation

The exemplary illustrative non-limiting system herein supports part repair and replacement labor and cost estimation as well as providing direction on how to repair. The pricing system works in close conjunction with the inspection criteria system described above. Each criteria plan endpoint (i.e., each combination of part, damage, severity, and action) can be assigned a specific combination of repair, refinish, and parts installation hours or fixed costs. The combination can also specify part replacement costs, if applicable.

For example, in the FIG. **12**A illustrative non-limiting example user interface, the user has clicked on the left front seat area of a flat car damage picker of FIG. **3**A, **3**B. The damage entry dialog has appeared, and he has chosen the "Burned" damage, "<⅛ inch" severity, and the "Repair" action. For that combination of choices, the illustrative exemplary non-limiting implementation system has accessed the pricing database **206***b* and determined that the correct pricing is 2.25 hours of repair labor, at $38.00 per hour, for a total of $85.50.

The exemplary illustrative non-limiting system has also determined that this repair is not chargeable to the vehicle lessee, since burn holes under ⅛ inch are considered normal wear and tear by this lessor. A different client could have different customizable chargeability and pricing rules.

In the FIG. **12**B exemplary illustrative non-limiting example, the user has chosen the same part, damage, and action, but the severity in this case is ">⅛ inch". That difference has resulted in the damage being considered as excess wear and tear, thus chargeable to the lessee. The pricing has also been increased to 4.0 hours, resulting in a total charge of $152.00.

The labor rates can be defined per client and will be applied to each damage calculation similarly. However, if necessary, the labor rates can be overridden for each criteria endpoint. For example, one particular client might have a default refinish labor rate of $40.00 per hour, but they might specify that refinish labor on interior wood dashboards should be charged at $50.00 per hour.

Each criteria plan endpoint can also be further subdivided by a detailed comment list, with each choice in the list having its own pricing. In FIG. **12**C, the user has clicked on the windshield area of the flat car damage picker. The damage entry dialog has appeared, and he has chosen the "Broken" damage. In the case of a broken windshield, the only allowable severity is "Replacement Required" and the only allowable action is "Replace", so those options have been chosen automatically. However, this particular client has defined different pricing levels for broken windshields based on the model of the car being inspected (see FIG. **12**C).

In one particular example, the user continues by selecting the "2001 or newer Buick Rainier" comment line. That choice results in a windshield replacement cost of $380.00 (see FIG. **12**D). If in this example the user had instead picked "All other vehicles", for example, the windshield replacement pricing would have been set at $144.00 (see FIG. **12**E). Or in other embodiments, the system can interpret the inputted VIN to automatically determine these parameters.

Other uses of the pricing subdivision include pricing the replacement of standard vs. powered antenna masts, providing different refinish rates for normal vs. metallic flake paint, or allowing different body shop repair time estimates for body panels dented on a curved edge rather than the flat part of the panel (see FIG. **1**).

This integrated pricing structure means that the inspector **50** does not have to memorize complicated pricing schemes or constantly refer to printed pricing manuals. This provides an enormous productivity advantage over competing inspection systems.

Example Body Damage Assessment and Valuation

FIG. **13**A shows an example non-limiting inspection input display **500** that may be used to input the detailed characteristics of particular types of body damage of vehicle **52**. The particular example shown is for a dent estimator that uses a detailed computer algorithm to determine the best way to repair and then estimates the cost and time for repairing a dent, depression or other damage in the body of vehicle **52**. Depending on the context, the technology can also be used to automatically direct or instruct service personnel to effect specific repairs. In one particular example, processor **104** performs this processing in response to input from processor **202** and sends data back to processor **202** for display, in other implementations processor **202** can perform some or all of the processing or the processing can be distributed.

In this specific example user interface shown in FIG. **13**A (to be understood in conjunction with the more detailed algorithm of executable instruction steps performed by processor **104** and/or processor **202**), the user interface display **500** asks the inspector **50** to "enter the length and width of the dent" in for example inches (see data input fields **502**, **504**, FIG. **15**A blocks **604**, **606**). The inspector **50** can measure the length and width of the dent using a ruler or other gauge. The example non-limiting implementation of user interface **500** requests the inspector **50** to use a pull-down list calibrated in inches to input the dimensions (length and width) of the dent to the nearest inch. Different input mechanisms (e.g., using a keyboard, etc.) are possible, although it is particularly efficient using a touch screen and stylus to select dent length and width based upon such pull down menuing.

The exemplary non-limiting user interface **500** then asks the inspector **50** to input the number of work hardened ("hard work") areas that have suffered damage into an input field **506** (FIG. **15**A block **608**). For example, certain parts of quarter panels that are hard work areas are more difficult to repair than other vehicle surfaces and therefore take more time. User interface **500** also requests the inspector **50** to

input the number of panel edges into an input field **508** (FIG. **15**A block **610**), and the number of body lines in the dent in an input field **510** (FIG. **15**A block **612**). Dents that extend across an edge require more time to repair. Similarly, dents that cross body lines require more time to work the metal in order to get an original equipment manufacturer look. Usually dents do not cross more than two or three body lines, but the example non-limiting implementation allows input for up to eight. For example, each scallop in a door is a body line. Such body lines take more time to repair.

User interface **500** then asks the inspector **50** to specify how deep the dent is in inches (FIG. **15**A block **614**). In one example non-limiting implementation, rather than inputting a free formed numerical value using a keyboard, the inspector is asked to input the dent depth by clicking on one of four mutually exclusive "radio button" input selectors **512**:

- less than a certain size, for example ¼ inch or ½ inch or the like
- that certain size (e.g., ¼ inch, ½ inch or the like) to less than another certain size (e.g., 1 inch)
- 1 inch to 2 inches
- greater than 2 inches.

In order to select one of these options **512**, the inspector **50** uses a ruler or other gauge to measure the maximum depth of the dent, and selects the appropriate input option.

User interface **500** also requests the inspector **50** to specify whether any of the following additional damages are present such as for example using check boxes or other input mechanisms (FIG. **15**A block **616**):

- are there any additional small damages? (field **514**)
- sharp creases or folds in repair surface?
- crushed metal?
- tears in the metal?
- gouged?
- aluminum?

These fields **514**-**524** allow the computer to add in more time for repair based on some of the more common complications that can be visibly observed by inspector **50** based on appearance or other inspection. For example, sharp creases or folds require more time, as does crushed metal and tears in the metal. Gouges also require additional time. Aluminum body parts are often or usually more difficult to repair than steel or fiberglass. This is because aluminum is more difficult to shape once it becomes badly bent and work hardened, aluminum panels are usually thicker than steel counterparts, and some techniques common for working with steel (e.g., shrinking hammers) can cause aluminum to crack. See e.g., Duffy, Auto Body Repair Technology (4th Ed. 2003), incorporated herein by reference.

Once the inspector **50** has inputted all of the information requested by example user interface **500**, the user can press a "calculate panel estimate" control (FIG. **15**A, block **618**) to cause appliance **62** and/or the remote processor to automatically calculate a panel damage estimate an example of which output display **530** is shown in FIG. **13**B. More details about the detailed calculation algorithm performed by the processor(s) as shown in FIG. **15**A is set forth below.

In the particular example shown in FIG. **13**A and following, the top panel damage estimate provides an "estimated repair time" of 5.5 hours for a dent having a length of two inches, a width of four inches, a depth of less than ¼ inch, in a work hardened area, three lines within the dent, and other characteristics as specified. The particular example shown in FIG. **13**B shows an additional dent number two that is less severe in that it is larger (length equals 3 inches, width equals 7 inches) but is not in a work hardened area and has no lines within it. Thus, this less severe dent in this particular example has an estimated repair time of only 1 hour as opposed to 5.5. An example appliance **62** automatically adds, sums or otherwise totalizes the total amount of repair time for all of body defects to provide an estimated repair time in hours of 6.5. In the example shown, appliance **62** may multiply the estimated repair time by the prevailing hourly rate based on a certain rate e.g., which can be based on one or more body shops in a geographical area, multiple rate based on local body shops, etc.), particular client, etc. in order to calculate estimated cost of repair.

In one possible implementation, the system focuses on the most pronounced damage. For instance, since the system is capable of "totalizing", if it noted damage on the fender that would fall under "repair" but also noted subsequent damage to same part that requires replacement, the system can be programmed to "ignore" the "repair" since it such damage will be inherently repaired when the entire part is replaced.

The processor(s) under software control generate an itemized report display a non-limiting example of which is shown in FIG. **13**C. Note the ability to click on an image to view a photograph of the damaged area. Additionally, check boxes are provided allowing an authorizer or adjuster to approve or disapprove repairs on an item-by-item basis. Once the repairs are authorized in this manner, the vehicle can be released to a body shop who will actually do the work. Particular steps involved in performing this and other work as described in the above-referenced book Duffy, Auto Body Repair Technology, results in a change of state of the vehicle in that the dents and other damage are removed and repaired and the vehicle may once again look brand new.

As mentioned above, FIG. **15**A shows an example non-limiting flowchart of the panel damage estimate process shown in FIGS. **13**A-**13**C. This process is defined by software stored on a non-transitory storage device and executed automatically by a processor(s) to generate the displays discussed above. In this particular implementation, data input is begun (block **602**) by the inspector **50** inputting the length of dent in inches into input field **502** using a dropdown box and specifying 1 to 24 inches in this particular example (block **604**). The inspector **50** then inputs the width of the dent in inches into input field **504** (e.g., from 1 to 24 inches) using a dropdown box (block **606**). The inspector **50** may then enter the number of work hardened areas (e.g., from 0 to 4 occurrences) into field **506** using the dropdown box (block **608**). Inspector **50** may also enter the number of panel edges (e.g., from 0 to 4) into field **508** using the dropdown box (block **610**). The inspector **50** may be further prompted to enter the number of body lines (e.g., from 0 to 8) into field **510** using a dropdown box (block **612**). The inspector **50** is further prompted to select the depth of the dent in inches using the radio buttons **512** as mentioned above (block **614**). The inspector **50** is further prompted to select any additional damages that apply using the checkboxes **514**-**524** (block **616**).

Once the inspector **50** presses a "calculate panel estimate" button or otherwise initiates a calculate panel estimate, the appliance **62** uses stored formulas and data matrices to automatically calculate body labor hours (block **618**).

In this particular example, appliance **62** uses a length and width lookup matrix to calculate the labor hours based on the width and length parameters (block **620**). The processor can automatically calculate and totalize damage estimates for several (any number of) different damage items so that the system can provide an accurate estimate to repair all damage on a particular vehicle and return the vehicle to "like new" condition (see "1×1 Dent", "2×1 Dent", etc.). In one example non-limiting implementation, appliance **62** adjusts

the repair time of each of the damage items upwardly based on the number of work hardened areas (block **624**), number of panel edges (block **626**), number of body lines (block **628**), depth of the dent (block **630**), and other additional damages (block **632**) for those particular damage items. Appliance **62** then displays the calculated body hours (e.g., repair time X.X hours) (block **634**). In the example shown, the appliance **62** may display a running total of all dents entered on the same panel (e.g., dent 1 X.X hours, dent 2 Y.Y hours) (block **634**). Appliance **62** may then prompt the inspector **50** whether he wishes to calculate another dent on the same panel (decision block **636**). If so, the user interface **500** is again displayed for a next dent and the user begins to input data as described above (block **638**). Otherwise, the inspector **50** may then be prompted using the picker display described above to select a different part of the vehicle for inputting damage information ("no" exit to decision block **636**).

Example Bumper Damage Estimator

FIGS. **14**A-**14**C show an additional example non-limiting embodiment of a damage estimator for use in estimating the repair time and cost of bumpers, and FIG. **15**B details a software controlled algorithm defined by software instructions stored in non-transitory memory and automatically executed by processor(s) **104** and/or **202** (in one particular example, processor **104** performs this processing in response to input from processor **202** and sends data back to processor **202** for display, in other implementations processor **202** can perform some or all of the processing or the processing can be distributed). In the example shown, in FIG. **14**A, a user interface **550** requests the inspector **50** to enter the length and width of a dent in a bumper (input fields **552**, **554**; FIG. **15**B block **656**, **658**) and also specify whether the dent is less than ½ inch in depth or ½ inch or greater (input fields **556**, FIG. **15**B block **660**). The user interface **550** also asks the user to specify the following additional characteristics associated with a bumper dent (FIG. **15**B block **662**):

are there any additional small damages? (input field **558**)
bumper smile? (input field **560**)
overall superficial damage? (input field **562**)
sharp creases or folds in repair surfaces? (input field **564**)
crushed plastic? (input field **566**)
tears in the plastic? (input field **568**)
gouge/puncture (input field **570**)
other

For example, a "smile" in the bumper (when the plastic part of the bumper has been dented but is not cracked, it causes the plastic to crease usually with a white smile shape) requires additional work to remove. "Superficial damage" may be for example caused by rocks and/or dirt sand blasting the bumper surface, etc., requiring additional time for prep and paint. Gouges can increase the repair time as well.

In the example shown, user interface **550** allows inspector **50** to optionally add removal and installation time information by selecting button **572**—or this can be done automatically (FIG. **15**B block **664**). Not all body shops charge extra for bumper removal and installation. In response to such selection, the user interface box **580** shown in FIG. **14**B may be displayed warning the inspector to ask a supervisor if the inspector is sure the location needs to assign removal and installation time. If the inspector **50** does want to add removal and installation time, an input field **582** is provided to specify the amount of removal and installation time in hours. This functionality is provided because some locations or body shops prefer to remove bumpers from the vehicle rather than working on them in place.

Referring back to FIG. **14**A, the example non-limiting implementation allows inspector **50** to also specify if there is cosmetic damage above prep time (input field **574**; FIG. **15**B block **654**). Once the inspector **50** has provided all desired inputs and selected all appropriate input fields, the inspector may select the "calculate bumper estimate" button **576** and appliance **62** will automatically calculate an estimated repair time as shown in a FIG. **14**C output display **590** (FIG. **15**B block **666**). In a particular example shown, appliance **62** calculates for a particular bumper dent having a length of 2 inches and a width of 3 inches and a depth of less than ½ inch, an estimated repair time of 2.5 hours. Appliance **62** may convert this into a cost by multiplying by appropriate prevailing rates and applying appropriate adjustments as necessary.

As discussed above, FIG. **15**B is a flowchart of an example software-controlled process performed by processor **104** and/or **202** for estimating bumper damage repair time. In the example shown, a radio button **574** is used to specify whether there is cosmetic damage above prep time (block **652**, decision block **654**. If no, the inspector **50** is prompted to enter the length of the dent in inches (e.g., from 1 to 24 inches) using the dropdown box **552** (block **656**) and to enter the width of the dent in inches (e.g., from 1 to 24 inches) using the dropdown box **554** (block **658**). Inspector **50** is further prompted to select the depth of the dent in inches using the radio buttons **556** as described above (block **660**), and to select any particular additional damages that apply using the check boxes **558**-**570** (block **662**). The inspector **50** is further prompted to optionally enter remove and install time if desired (as described above) using the button **572** (block **664**) or this information can be supplied automatically from a database. Upon pressing the "calculate bumper estimate" button **576**, appliance **62** uses formulas and data matrices to calculate body labor hours (block **666**). The data calculated may then be displayed (block **668**).

FIG. **15**B further shows an example detailed data calculation algorithmic operation **668** that may be impacted by whether there is cosmetic damage above prep time (block **654**, "yes" exit to decision block). If there is no cosmetic damage above prep time (block **654'**, "no" exit), appliance **62** uses the length and width lookup matrix to calculate the labor body hours based upon width and length parameters (block **670**), and may add additional repair time based on the depth of the dent (block **672**), additional damages as described above (block **674**), and remove and installation time if applicable (block **676**). If the inspector **50** specifies that there is cosmetic damage above prep time ("yes" exit to decision block **654'**), appliance **62** adds bumper time based on the above prep time calculation (e.g., above prep time=X labor time) (block **678**). Either way, appliance **62** may display the repair time in hours (block **680**), and then reset the dent grid shown in FIG. **14**A (block **682**) in preparation for an additional data input (block **684**).

Example Non-Limiting Conventional Standards for Assessing Exterior Damage

The following are example non-limiting conventional reporting standards that may be used to guide recommendations and reporting of individual repairs:

Multiple Damages:

For panels with multiple damages, all damages must be listed. For example, the LF Fender of the vehicle being inspected has a dent 3" to 4", a heavy scratch 2" to 3", and a light scratch 4" to 5", the damages should be listed individually.

Paint Damage:

Paint chips (per panel)—Chipped or Multiple Chips|Number of Occurrences

Paint which is peeling or cracked—Size Severity

A light scratch or scuff that does not penetrate the clear coat—Size Severity

Multiple light scratches|number of occurrences

A heavy scratch—Size Severity

Multiple heavy scratches—Number of Occurrences

A comment should be placed on the damage line indicating the total length of all scratches if possible.

Bug damage that is not severe enough to warrant a repair—Bug Damage|Acceptable

Bug damage that is severe enough to need repair—Bug Damage|Repair Required

Paint damaged from tree sap, acid rain, bird droppings, etc. that is—Environmental Paint Damage|Size Severity

Panels that have Road Paint/Overspray—Road Paint/Overspray|Size Severity

Factory emblems, stripes, or decals that are missing or damaged—Appropriate Damage|Replacement Required

Any OEM stripes or decals that require removal for repair or refinish of a panel—Remove/Install|Removal Required

Emblems (as it pertains to a part), that require removal for repair or refinish of a panel—Remove/Install|Removal Required

Any aftermarket logos, decals, or auto wrap that require removal choose—Overall Vehicle|De-Identify|Removal Required

Panels with mismatched paint—Mismatched|Unacceptable

Body Damage:

Paint-less Dent Removal (PDR) is a per panel estimate

Dents with no paint damage that are one (1) inch or less—Dent/No Paint Dmg|PDR/1 to PDR>10

A single dent without paint damage that is greater than one (1) inch in diameter—Dent/No Paint Dmg|Size Severity

Multiple dents without paint damage that are larger than one (1) inch—Number of Occurrences

A comment should be placed on the damage line indicating the total size of all dents if possible.

Note Multiple dents without paint damage that are 7 or more in number of occurrences (regardless of size) must have an action of repair

A single dent with paint damage—Dent/Paint Dmg|Size Severity

Multiple dents with paint damage regardless of size—Number of Occurrences

A comment should be placed on the damage line indicating the total size of all dents if possible.

If a panel has multiple dents with and without paint damage, inspector may select the damage of multiple dents w/paint damage for all dents and list number of occurrences as outlined above. Since each dent may be listed separately, it is possible from those separate entries that the system would make this determination on its own.

Any dent or dents that are severe enough in nature or location that would require the panel to be replaced—Severe Damage|Size Severity

All dent repairs have a one (1) hour minimum repair time for the first inch in dent size.

Add a ½ hour labor for each additional inch in size of the dent (refinish labor must also be added as described below). For example: dent size is 3 inches—labor to repair is 2 hours plus paint labor.

Add ½ hour labor for dents on Contours, Body lines, and any work hard areas.

Cracks, Cuts, tears, and gouges—Size Severity

Holes and punctures—Size Severity

Panels that have rust damage—Rust|Size Severity

Panels that have rust damage to the point of needing replacement—Rust|Severe Damage

Exterior Molding and Trim:

Chips to all painted molding, cladding or trim—Number of Occurrences

A single Light scratch or scuff to all painted molding, cladding or trim that do not penetrate the clear coat—Size Severity

Multiple light scratches and scuffs to all painted molding, cladding or trim that do not penetrate the clear coat—Number of Occurrences

Gouges, cracks, heavy scratches, tears, or cuts to molding, cladding or trim—Size Severity

Multiple heavy scratches to molding, cladding or trim—Number of Occurrences

Any dented (with or without paint damage), bent, broken, holes, or punctures to the molding, cladding or trim—Size Severity

Multiple dents (with or without paint damage) to the molding, cladding or trim—Number of Occurrences

Paint on any molding which is peeling or cracked—Size Severity

Loose molding or trim—Loose|Repair Required

Prior Repairs:

Poor previous repairs are defined as being inferior in quality to commercially acceptable repairs.

Poor previous repairs are defined as those having improper color match and noticeable texture difference. There must be no severe sand/grinding marks or excessive overspray. The inspector should attempt to capture the grind marks and/or excessive overspray in the supporting inspection photo. Parts (doors/bumpers etc.) that are misaligned (unless severely misaligned) and tape lines are not to be considered poor repairs but must be disclosed and adjustments suggested.

Prior repairs that are "Acceptable" in quality (NOT substandard)—Prev Repair|Acceptable

All prior repairs that are "Substandard" (Clearly Substandard) in quality are to be listed as damage line items and priced out based on correcting the panel to acceptable condition—Prev Repair|Substd Repair

A comment should be placed on the damage line indicating the reason the repair is substandard if possible (sanding marks, paint runs, etc).

For substandard repairs that can be buffed out—Prev Repair|Buffable

If a panel has been replaced (i.e., fender, hood, door skin), and the work is acceptable—Replaced|Acceptable

If a panel has been replaced (i.e., fender, hood, door skin), and the work is unacceptable—Replaced|Substd Repair

A comment should be placed on the damage line indicating the reason the repair is substandard if possible (sanding marks, paint runs, etc).

If the entire vehicle has been repainted to a color different from the original color, and the repaint is of acceptable quality—Overall Vehicle Repainted|Non-OEM

If the entire vehicle has been repainted and the repaint is of substandard quality, each repainted panel must be listed—Prev Repair|Substd Repair

If the vehicle has had some but not all panels repainted to a color different from the original color, each repainted panel must be listed as "Prev Repair" and noted as "Acceptable" or "Substd Repair" as indicated above.

Pickup Truck Beds:

Beds with scratches (regardless of size and severity) and minor dents (up to four inches)—Inside Bed|appropriate damage|appropriate severity (as described in paint & body damage section).

Metal Bumpers:

Any damage to Chrome Metal Bumpers—select the appropriate damage and severity (as described in paint & body damage section).

Painted Metal bumpers with paint chip(s)—Chipped or Multiple Chips|Number of Occurrences

A light scratch or scuff on painted metal bumpers that does not penetrate the clear coat—Size Severity

Multiple light scratches—Number of Occurrences

Painted Metal bumpers with heavy scratches or sandblasting—Size Severity

Multiple heavy scratches—Number of Occurrences

A comment should be placed on the damage line indicating the total length of all scratches if possible.

Paint which is peeling or cracked—Size Severity

Any dent, cut, tear, hole or bend in any metal bumpers—Size Severity

Bumper Covers:

For a full bumper cover repair, you must select the complete bumper cover as the part.

For a partial bumper cover repair, you must select the appropriate bumper piece or section such as "LF Bumper Cover".

A "Partial Repair" is defined as a repair area not exceeding ⅓ of the entire bumper surface. ⅓ of a bumper is any area measured horizontally that is no greater than one third of the bumpers total end-to-end length.

You can have one (1) partial repair per bumper.

Vehicles that have "Tri-Coat" or "Three Stage" paint cannot have partial repairs performed. They can only have full panel repair or refinish.

Bumper covers with paint chip(s)—Chipped or Multiple Chips' Number of Occurrences

A light scratch or scuff that does not penetrate the clear coat—Size Severity

Multiple light scratches—Number of Occurrences

A heavy scratch—Size Severity

Multiple heavy scratches—Number of Occurrences

A comment should be placed on the damage line indicating the total length of all scratches if possible.

Paint which is peeling or cracked—Size Severity

A cut, crack, tear, gouge, bend or dent with or without paint damage—Size Severity

Multiple dents with or without paint damage—Number of occurrences

A comment should be placed on the damage line indicating the total size of all dents if possible.

Holes and punctures—Size Severity

Lower bumper covers, valances, spoilers & air dams with multiple scrapes & scratches (light or heavy)—Curb Rash|Size Severity

Hail Damage:

For each damaged panel, select "Hail Dmg"—Number of occurrences

While the technology herein has been described in connection with exemplary illustrative non-limiting implementations, the invention is not to be limited by the disclosure. For example, while the exemplary illustrative non-limiting example described herein focuses on used motor vehicles, many other applications and uses are possible and contemplated. The invention is intended to be defined by the claims and to cover all corresponding and equivalent arrangements whether or not specifically disclosed herein.

We claim:

1. A computer-assisted process for allowing a seller to disclose parameterized condition information to potential purchasers by using a handheld device comprising at least one processor and at least one non-transitory storage device storing executable code, the at least one processor executing the stored executable code to provide a visually-perceptible display on a touch screen display, the process comprising:

(1) automatically requesting, with the processor, an inspector to input condition information referring to the condition of a motor vehicle by guiding the inspector through a virtual walk around of the motor vehicle using pre-defined on-screen instructions of the handheld device, resulting in data collection including at least one inspection item and damage values of the motor vehicle;

(2) automatically requesting, with the at least one processor of the handheld device the inspector to capture images of the motor vehicle including damaged areas with a camera operatively connected to the handheld device and store the images of the motor vehicle in the at least one non-transitory storage device;

(3) automatically wirelessly transmitting, from the handheld device processor, at least the input condition information referring to the motor vehicle condition to a web service on an external server;

(4) receiving from the web service of the external server a mapping the input condition information to a seller parameterized grade, including mapping a higher precision grade parameter to a lower precision seller grade value, wherein the web service of the external server automatically performs the mapping of the at least one inspection item and the damage values of the motor vehicle to at least three parameters of severity, item description, item code, damage description, damage code, severity description, action description, and action code; and

(5) based on the information received from the web service of the external server, automatically displaying, on the touch screen display of the handheld device, the lower precision seller grade value and the mapped information regarding the at least one inspection item, the damage values, and the at least three parameters to the inspector for inclusion in a human-and-machine readable seller condition report including a grade for the condition of the motor vehicle and at least the captured and stored images of the motor vehicle.

* * * * *