US010040359B2

(12) United States Patent
Chen et al.

(10) Patent No.: US 10,040,359 B2
(45) Date of Patent: Aug. 7, 2018

(54) **APPARATUS, SYSTEM, AND METHOD FOR VENDING, CHARGING, AND TWO-WAY DISTRIBUTION OF ELECTRICAL ENERGY STORAGE DEVICES**

(71) Applicant: **Gogoro Inc.**, Hong Kong (CN)

(72) Inventors: **Jung-Hsiu Chen**, Taoyuan (TW); **Shen-Chi Chen**, Bade (TW); **Yu-Lin Wu**, Chiayi (TW); **Chien-Ming Huang**, Taipei (TW); **TsungTing Chan**, Bade (TW); **Feng Kai Yang**, Taipei (TW)

(73) Assignee: **Gogoro Inc.**, Hong Kong (CN)

( * ) Notice: Subject to any disclaimer, the term of this patent is extended or adjusted under 35 U.S.C. 154(b) by 99 days.

(21) Appl. No.: **14/842,467**

(22) Filed: **Sep. 1, 2015**

(65) **Prior Publication Data**

US 2016/0068075 A1 Mar. 10, 2016

**Related U.S. Application Data**

(60) Provisional application No. 62/045,982, filed on Sep. 4, 2014.

(51) **Int. Cl.**
***H02J 7/00*** (2006.01)
***B60L 11/18*** (2006.01)
(Continued)

(52) **U.S. Cl.**
CPC ..... ***B60L 11/1822*** (2013.01); ***B60L 11/1846*** (2013.01); ***B60L 11/1848*** (2013.01);
(Continued)

(58) **Field of Classification Search**
USPC ..... 320/107
See application file for complete search history.

(56) **References Cited**

U.S. PATENT DOCUMENTS

3,678,455 A 7/1972 Levey
3,687,484 A 8/1972 Cosby
(Continued)

FOREIGN PATENT DOCUMENTS

AU 2012258299 A1 12/2012
CA 2 797 507 A1 5/2011
(Continued)

OTHER PUBLICATIONS

Chinese Office Action, dated Feb. 6, 2016, for corresponding CN Application No. 201280046976.1, with English Translation, 49 pages.

(Continued)

*Primary Examiner* — Mohammed Alam
(74) *Attorney, Agent, or Firm* — Perkins Coie LLP

(57) **ABSTRACT**

A two-way distribution, charging, and vending system permits a subscriber to exchange one or more partially or completely discharged portable electric energy storage devices for a comparable number of charged portable electric energy storage devices. The two-way distribution, charging, and vending system includes a number of charging modules, each with a dedicated power converter, communicably coupled to at least one two-way distribution system controller and to a power distribution grid. Upon receipt of a discharged portable electric energy storage device, the at least one two-way distribution system controller validates a manufacturer identifier and a subscriber identifier stored in a nontransitory storage media carried by the discharged portable electric energy storage device. Responsive to a successful authentication and validation, the at least one two-way distribution system controller dispenses a charged portable electric energy storage device to the subscriber.

**19 Claims, 17 Drawing Sheets**

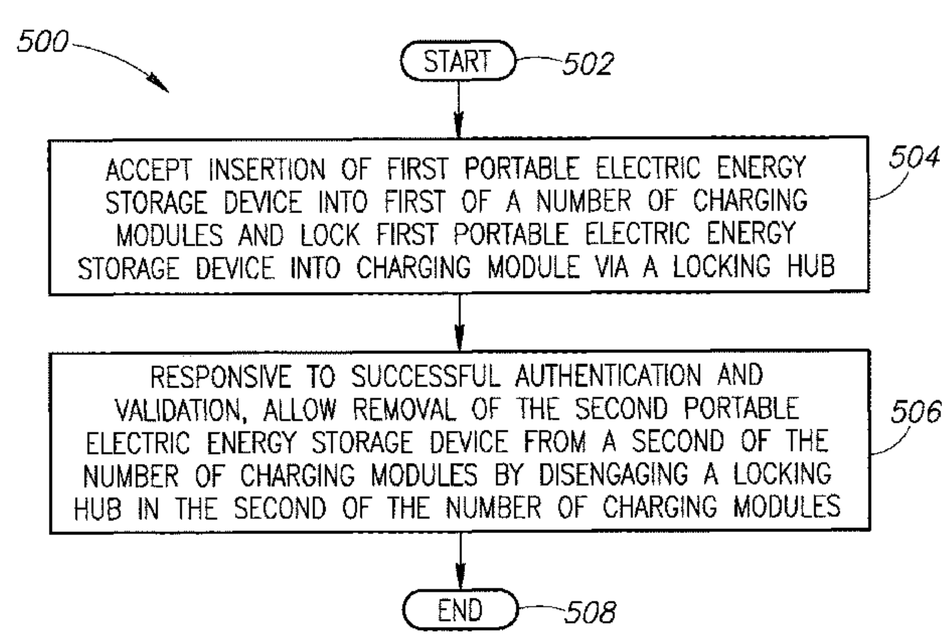

(51) **Int. Cl.**

| | |
|---|---|
| ***G07F 7/06*** | (2006.01) |
| ***G07F 15/00*** | (2006.01) |
| ***B60S 5/06*** | (2006.01) |

(52) **U.S. Cl.**

CPC ..... ***B60L 11/1857*** (2013.01); ***B60L 11/1874*** (2013.01); ***B60L 11/1875*** (2013.01); ***B60S 5/06*** (2013.01); ***G07F 7/06*** (2013.01); ***G07F 15/006*** (2013.01); *B60L 2230/12* (2013.01); *B60L 2230/16* (2013.01); *B60L 2230/22* (2013.01); *B60L 2240/545* (2013.01); *B60L 2240/70* (2013.01); *B60L 2250/20* (2013.01); *B60L 2270/34* (2013.01); *Y02T 10/7005* (2013.01); *Y02T 10/705* (2013.01); *Y02T 10/7088* (2013.01); *Y02T 10/7291* (2013.01); *Y02T 90/121* (2013.01); *Y02T 90/124* (2013.01); *Y02T 90/128* (2013.01); *Y02T 90/14* (2013.01); *Y02T 90/16* (2013.01); *Y02T 90/163* (2013.01); *Y02T 90/169* (2013.01); *Y04S 30/14* (2013.01)

(56) **References Cited**

U.S. PATENT DOCUMENTS


| | | | |
|---|---|---|---|
| 3,708,028 | A | 1/1973 | Hafer |
| 4,129,759 | A | 12/1978 | Hug |
| 5,491,486 | A | 2/1996 | Welles, II et al. |
| 5,544,784 | A | 8/1996 | Malaspina |
| 5,642,270 | A | 6/1997 | Green et al. |
| 5,648,897 | A | 7/1997 | Johnson et al. |
| 5,711,648 | A | 1/1998 | Hammerslag |
| D416,536 | S | 11/1999 | Ross et al. |
| 5,998,963 | A | 12/1999 | Aarseth |
| D425,866 | S | 5/2000 | Nagasawa et al. |
| 6,094,028 | A | 7/2000 | Gu et al. |
| D455,397 | S | 4/2002 | Weiner et al. |
| 6,494,279 | B1 | 12/2002 | Hutchens |
| 6,498,457 | B1 | 12/2002 | Tsuboi |
| 6,614,204 | B2 | 9/2003 | Pellegrino et al. |
| 6,796,396 | B2 | 9/2004 | Kamen et al. |
| 6,799,993 | B2 * | 10/2004 | Krieger ..... H01M 2/1005 439/500 |
| D512,962 | S | 12/2005 | Nishizawa |
| 7,109,875 | B2 | 9/2006 | Ota et al. |
| 7,111,179 | B1 | 9/2006 | Girson et al. |
| D530,667 | S | 10/2006 | Viduya et al. |
| D597,939 | S | 8/2009 | Tkachuk |
| 7,592,728 | B2 | 9/2009 | Jones et al. |
| D601,498 | S | 10/2009 | Aglassinger |
| 7,630,181 | B2 | 12/2009 | Wilk et al. |
| 7,923,144 | B2 | 4/2011 | Kohn et al. |
| 7,948,207 | B2 | 5/2011 | Scheucher |
| D640,194 | S | 6/2011 | Kim et al. |
| 7,979,147 | B1 | 7/2011 | Dunn |
| 7,993,155 | B2 | 8/2011 | Heichal et al. |
| 8,006,793 | B2 | 8/2011 | Heichal et al. |
| 8,006,973 | B2 | 8/2011 | Toba et al. |
| 8,013,571 | B2 | 9/2011 | Agassi et al. |
| 8,035,341 | B2 | 10/2011 | Genzel et al. |
| 8,098,050 | B2 | 1/2012 | Takahashi |
| 8,118,132 | B2 | 2/2012 | Gray, Jr. |
| 8,219,839 | B2 | 7/2012 | Akimoto |
| 8,301,365 | B2 | 10/2012 | Niwa et al. |
| 8,378,627 | B2 | 2/2013 | Asada et al. |
| D691,947 | S | 10/2013 | Cole et al. |
| D692,376 | S | 10/2013 | Palmer et al. |
| 8,560,147 | B2 | 10/2013 | Taylor et al. |
| 8,564,241 | B2 | 10/2013 | Masuda |
| D694,178 | S | 11/2013 | Bennett et al. |
| D697,476 | S | 1/2014 | Jeong et al. |
| 8,798,852 | B1 | 8/2014 | Chen et al. |
| 8,825,250 | B2 | 9/2014 | Luke et al. |
| D716,220 | S | 10/2014 | Kirpalani |
| 8,862,304 | B2 | 10/2014 | Chen et al. |
| 8,862,388 | B2 | 10/2014 | Wu et al. |
| 8,878,487 | B2 | 11/2014 | Wu et al. |
| 8,901,861 | B2 | 12/2014 | Luke et al. |
| 8,996,188 | B2 | 3/2015 | Frader-Thompson et al. |
| 8,996,212 | B2 | 3/2015 | Chen et al. |
| 8,996,308 | B2 | 3/2015 | Wu et al. |
| D731,420 | S | 6/2015 | Croft et al. |
| D737,761 | S | 9/2015 | Zhuang et al. |
| D737,763 | S | 9/2015 | Capriola |
| 9,123,035 | B2 | 9/2015 | Penilla et al. |
| 9,130,375 | B2 | 9/2015 | Yeh et al. |
| D745,847 | S | 12/2015 | Ho et al. |
| D753,057 | S | 4/2016 | Kubo et al. |
| 2001/0033502 | A1 | 10/2001 | Blair et al. |
| 2001/0052433 | A1 | 12/2001 | Harris et al. |
| 2002/0026252 | A1 | 2/2002 | Wruck et al. |
| 2002/0156537 | A1 | 10/2002 | Sakakibara et al. |
| 2003/0209375 | A1 | 11/2003 | Suzuki et al. |
| 2004/0002266 | A1 | 1/2004 | Hinkle et al. |
| 2004/0027094 | A1 | 2/2004 | Sanders et al. |
| 2004/0130292 | A1 | 7/2004 | Buchanan et al. |
| 2004/0236615 | A1 | 11/2004 | Msndy |
| 2007/0126395 | A1 | 6/2007 | Suchar |
| 2007/0188130 | A1 | 8/2007 | Scheucher |
| 2007/0238164 | A1 | 10/2007 | Kim |
| 2008/0007211 | A1 | 1/2008 | Poisner |
| 2008/0015721 | A1 | 1/2008 | Spearman |
| 2008/0067974 | A1 | 3/2008 | Zhang et al. |
| 2008/0143292 | A1 | 6/2008 | Ward |
| 2008/0154801 | A1 | 6/2008 | Fein et al. |
| 2008/0276110 | A1 | 11/2008 | Indiani et al. |
| 2008/0281732 | A1 | 11/2008 | Yamada |
| 2009/0033278 | A1 | 2/2009 | Ludtke |
| 2009/0045773 | A1 | 2/2009 | Pandya et al. |
| 2009/0082957 | A1 | 3/2009 | Agassi et al. |
| 2009/0198372 | A1 | 8/2009 | Hammerslag |
| 2009/0261779 | A1 | 10/2009 | Zyren |
| 2009/0278488 | A1 | 11/2009 | Choi et al. |
| 2010/0012406 | A1 | 1/2010 | Kressner et al. |
| 2010/0013433 | A1 | 1/2010 | Baxter et al. |
| 2010/0017045 | A1 | 1/2010 | Nesler et al. |
| 2010/0094496 | A1 | 4/2010 | Hershkovitz et al. |
| 2010/0114798 | A1 | 5/2010 | Sirton |
| 2010/0114800 | A1 | 5/2010 | Yasuda et al. |
| 2010/0134067 | A1 | 6/2010 | Baxter et al. |
| 2010/0145717 | A1 | 6/2010 | Hoeltzel |
| 2010/0161481 | A1 | 6/2010 | Littrell |
| 2010/0188043 | A1 | 7/2010 | Kelty et al. |
| 2010/0191585 | A1 | 7/2010 | Smith |
| 2010/0198535 | A1 | 8/2010 | Brown et al. |
| 2010/0201482 | A1 | 8/2010 | Robertson et al. |
| 2010/0225266 | A1 | 9/2010 | Hartman |
| 2010/0262312 | A1 | 10/2010 | Kubota et al. |
| 2010/0308989 | A1 | 12/2010 | Gasper |
| 2011/0010043 | A1 | 1/2011 | Lafky |
| 2011/0016063 | A1 | 1/2011 | Pollack et al. |
| 2011/0025263 | A1 | 2/2011 | Gilbert |
| 2011/0025267 | A1 | 2/2011 | Kamen et al. |
| 2011/0032110 | A1 | 2/2011 | Taguchi |
| 2011/0055037 | A1 | 3/2011 | Hayashigawa et al. |
| 2011/0082598 | A1 | 4/2011 | Boretto et al. |
| 2011/0095723 | A1 | 4/2011 | Bhade et al. |
| 2011/0106329 | A1 | 5/2011 | Donnelly et al. |
| 2011/0111644 | A1 | 5/2011 | Jin |
| 2011/0114798 | A1 | 5/2011 | Gemmati |
| 2011/0148346 | A1 | 6/2011 | Gagosz et al. |
| 2011/0153141 | A1 | 6/2011 | Beechie et al. |
| 2011/0156662 | A1 | 6/2011 | Nakamura et al. |
| 2011/0191265 | A1 | 8/2011 | Lowenthal et al. |
| 2011/0202476 | A1 | 8/2011 | Nagy et al. |
| 2011/0224868 | A1 | 9/2011 | Collings, III et al. |
| 2011/0224900 | A1 | 9/2011 | Hiruta et al. |
| 2011/0273180 | A1 | 11/2011 | Park et al. |
| 2011/0282527 | A1 | 11/2011 | Inbarajan et al. |
| 2011/0292667 | A1 | 12/2011 | Meyers |
| 2011/0295454 | A1 | 12/2011 | Meyers |
| 2011/0303509 | A1 | 12/2011 | Agassi et al. |
| 2012/0058682 | A1 | 3/2012 | Huang |

(56) **References Cited**

U.S. PATENT DOCUMENTS

| | | | | |
|---|---|---|---|---|
| 2012/0078413 | A1 | 3/2012 | Baker, Jr. | |
| 2012/0109519 | A1 | 5/2012 | Uyeki | |
| 2012/0158229 | A1 | 6/2012 | Schaefer | |
| 2012/0173292 | A1 | 7/2012 | Solomon et al. | |
| 2012/0194346 | A1 | 8/2012 | Tsai et al. | |
| 2012/0233077 | A1 | 9/2012 | Tate, Jr. et al. | |
| 2012/0248868 | A1 | 10/2012 | Mobin et al. | |
| 2012/0253567 | A1 | 10/2012 | Levy et al. | |
| 2012/0259665 | A1 | 10/2012 | Pandhi et al. | |
| 2012/0262114 | A1* | 10/2012 | Bianco | H02J 7/0042 320/109 |
| 2012/0299527 | A1 | 11/2012 | Vo | |
| 2012/0319649 | A1 | 12/2012 | Billmaier | |
| 2013/0026971 | A1* | 1/2013 | Luke | B60L 11/185 320/104 |
| 2013/0026972 | A1* | 1/2013 | Luke | G07F 17/12 320/106 |
| 2013/0030580 | A1 | 1/2013 | Luke et al. | |
| 2013/0030581 | A1 | 1/2013 | Luke et al. | |
| 2013/0030920 | A1 | 1/2013 | Wu et al. | |
| 2013/0046457 | A1 | 2/2013 | Pettersson | |
| 2013/0049677 | A1 | 2/2013 | Bouman | |
| 2013/0078867 | A1 | 3/2013 | ChongYu et al. | |
| 2013/0127416 | A1 | 5/2013 | Karner et al. | |
| 2013/0132307 | A1* | 5/2013 | Phelps | H02J 7/0027 705/412 |
| 2013/0151293 | A1 | 6/2013 | Karner et al. | |
| 2013/0164573 | A1 | 6/2013 | Williams et al. | |
| 2013/0179061 | A1 | 7/2013 | Gadh et al. | |
| 2013/0207605 | A1 | 8/2013 | Errattuparambil et al. | |
| 2013/0221928 | A1 | 8/2013 | Kelty et al. | |
| 2014/0266006 | A1 | 9/2014 | Luke et al. | |
| 2014/0368032 | A1 | 12/2014 | Doerndorfer | |

FOREIGN PATENT DOCUMENTS

| | | | |
|---|---|---|---|
| CA | 2 865 976 | A1 | 9/2013 |
| CN | 1211844 | A | 3/1999 |
| CN | 101071953 | A | 11/2007 |
| CN | 12007418 | A | 4/2011 |
| CN | 102064565 | A | 5/2011 |
| CN | 103178313 | | 6/2013 |
| DE | 69927649 | | 5/2006 |
| DE | 10 2007 045 633 | A1 | 4/2009 |
| DE | 11 2008 000 424 | T5 | 12/2009 |
| DE | 10 2009 016 869 | A1 | 10/2010 |
| DE | 10 2010 039 075 | A1 | 2/2011 |
| DE | 102010040388 | | 3/2012 |
| EP | 0 693 813 | A1 | 1/1996 |
| EP | 0877342 | | 11/1998 |
| EP | 1 177 955 | A2 | 2/2002 |
| EP | 0 902 521 | B1 | 12/2008 |
| EP | 2 110 923 | A1 | 10/2009 |
| EP | 2 182 575 | A1 | 5/2010 |
| EP | 2 230 146 | A2 | 9/2010 |
| EP | 2 428 939 | A1 | 3/2012 |
| EP | 2651002 | | 10/2013 |
| JP | 9-119839 | A | 5/1997 |
| JP | 10-170293 | A | 6/1998 |
| JP | 10-307952 | A | 11/1998 |
| JP | 11-51681 | A | 2/1999 |
| JP | 11-296606 | A | 10/1999 |
| JP | 2000-14032 | A | 1/2000 |
| JP | 2000-102102 | A | 4/2000 |
| JP | 2000-102103 | A | 4/2000 |
| JP | 2000-341868 | A | 12/2000 |
| JP | 2001-23037 | A | 1/2001 |
| JP | 2002-1400398 | A | 5/2002 |
| JP | 2002-269195 | A | 9/2002 |
| JP | 2002-324264 | A | 11/2002 |
| JP | 2003-102110 | A | 4/2003 |
| JP | 2003-262525 | A | 9/2003 |
| JP | 2004-30168 | A | 1/2004 |
| JP | 2004-215468 | A | 7/2004 |
| JP | 2004-335838 | A | 12/2004 |
| JP | 2006-331405 | A | 12/2006 |
| JP | 2007-148590 | A | 6/2007 |
| JP | 2007-182310 | A | 7/2007 |
| JP | 2009-8609 | A | 1/2009 |
| JP | 2009-103504 | A | 5/2009 |
| JP | 2010-172122 | A | 8/2010 |
| JP | 2010-186238 | A | 8/2010 |
| JP | 2010-191636 | A | 9/2010 |
| JP | 2010-200405 | A | 9/2010 |
| JP | 2010-212048 | A | 9/2010 |
| JP | 2010-263781 | A | 11/2010 |
| JP | 2010-263788 | A | 11/2010 |
| JP | 2011-83166 | A | 4/2011 |
| JP | 2011-87430 | A | 4/2011 |
| JP | 2011-97825 | A | 5/2011 |
| JP | 2011-118638 | A | 6/2011 |
| JP | 2011-135727 | A | 7/2011 |
| JP | 2011-142704 | A | 7/2011 |
| JP | 2011-142779 | A | 7/2011 |
| JP | 2012-503468 | A | 2/2012 |
| JP | 2012-523551 | A | 10/2012 |
| JP | 2015015827 | | 1/2015 |
| KR | 10-2009-0103431 | A | 10/2009 |
| TW | 477099 | B | 2/2002 |
| TW | 200836452 | A | 9/2008 |
| TW | I303508 | B | 11/2008 |
| TW | I315116 | B | 9/2009 |
| TW | M371880 | U1 | 1/2010 |
| TW | M379269 | U1 | 4/2010 |
| TW | M379789 | U1 | 5/2010 |
| TW | M385047 | U1 | 7/2010 |
| TW | 201043986 | A1 | 12/2010 |
| TW | 201044266 | A1 | 12/2010 |
| TW | 201044289 | A1 | 12/2010 |
| TW | 201105985 | A | 2/2011 |
| TW | 201112579 | A | 4/2011 |
| WO | 98/21132 | A1 | 5/1998 |
| WO | 2006/090636 | A1 | 8/2006 |
| WO | 2009/039454 | A1 | 3/2009 |
| WO | 2010/033517 | A2 | 3/2010 |
| WO | 2010/035605 | A1 | 4/2010 |
| WO | 2010/115573 | A1 | 10/2010 |
| WO | 2011/138205 | A1 | 11/2011 |
| WO | 2012/160407 | A1 | 11/2012 |
| WO | 2012/160557 | A2 | 11/2012 |
| WO | 2013/016540 | A1 | 1/2013 |
| WO | 2013/024483 | A2 | 2/2013 |
| WO | 2013/024484 | A1 | 2/2013 |
| WO | 2013/074819 | A1 | 5/2013 |
| WO | 2013/080211 | A1 | 6/2013 |
| WO | 2013/102894 | A1 | 7/2013 |
| WO | 2013/108246 | A2 | 7/2013 |
| WO | 2013/118113 | A2 | 8/2013 |
| WO | 2013/128007 | A2 | 9/2013 |
| WO | 2013/128009 | A2 | 9/2013 |
| WO | 2013/128009 | A3 | 9/2013 |
| WO | 2013/142154 | A1 | 9/2013 |
| WO | 2013/144951 | A1 | 10/2013 |

OTHER PUBLICATIONS

Taiwanese Office Action, dated Dec. 25, 2015, for corresponding TW Application No. 101127034, with English Translation, 7 pages.

Taiwanese Office Action, dated Jan. 25, 2016, for corresponding TW Application No. 101127016, with English Translation, 24 pages.

Chen et al., "Apparatus, System and Method for Vending, Charging, and Two-Way Distribution of Electrical Energy Storage Devices," U.S. Appl. No. 62/045,982, filed Sep. 4, 2014, 93 pages.

Chinese Office Action, dated May 16, 2016, for corresponding CN Application No. 201280046994, with English translation, 25 pages.

Japanese Office Action dated Sep. 28, 2015 for corresponding JP Application No. 2014-523023, with English Translation, 15 pages.

Japanese Office Action dated Jun. 7, 2016, for corresponding JP Application No. 2014-523004, with English Translation, 13 pages.

Taiwanese Office Action dated Jun. 16, 2016, for corresponding TW Application No. 101127040, with English Translation, 6 pages.

(56) **References Cited**

OTHER PUBLICATIONS

Taiwanese Office Action dated Jun. 20, 2016, for corresponding TW Application No. 101127036, with English Translation, 12 pages.
Japanese Office Action dated Aug. 16, 2016, for corresponding JP Application No. 2014-523019, with English Translation, 10 pages.
Luke et al., "Modular System for Collection and Distribution of Electric Storage Devices," Office Action dated Sep. 19, 2016 for U.S. Appl. No. 14/202,589, 17 pages.
Extended European Search Report dated Sep. 29, 2016 for corresponding EP Application No. 14769329.5, 10 pages.
Taiwanese Office Action dated Jan. 14, 2016, for corresponding TW Application No. 101127042, with English Translation, 25 pages.
Taiwanese Office Action dated Jan. 30, 2016, for corresponding TW Application No. 101127036, with English Translation, 25 pages.
"Inrunner," retreived from URL=http://en.wikipedia.org/w/index.php?title=Inrunner&printable=yes on Sep. 28, 2011, 1 page.
"Outrunner," retreived from URL=http://en.wikipedia.org/w/index.php?title=Outrunner&printable=yes on Sep. 16, 2011, 2 pages.
Chinese Office Action dated Jul. 31, 2015, for corresponding CN Application No. 201280046976.1, with English Translation, 45 pages.
Chinese Office Action dated Oct. 9, 2015, for corresponding CN Application No. 20120046898.5, with English translation, 21 pages.
Chinese Office Action dated Sep. 28, 2015, for corresponding CN Application No. 201280046879, with English Translation, 18 pages.
Communication pursuant to Rules 161(2) and 162 EPC, for corresponding European Patent Application No. 12817696.3, dated Mar. 27, 2014, 3 pages.
Communication pursuant to Rules 161(2) and 162 EPC, for corresponding European Patent Application No. 12817883.7, dated Mar. 27, 2014, 3 pages.
Communication pursuant to Rules 161(2) and 162 EPC, for corresponding European Patent Application No. 12818447.0, dated Mar. 27, 2014, 3 pages.
Communication pursuant to Rules 70(2) and 70a(2) EPC, dated Aug. 21, 2015, for corresponding European Patent Application No. 12817696.3-1807, 1 page.
Communication pursuant to Rules 70(2) and 70a(2) EPC, dated Aug. 21, 2015, for corresponding European Patent Application No. 12818447.0-1807, 1 page.
Extended European Search Report dated Aug. 5, 2015, for corresponding EP Application No. 12817696.3, 13 pages.
Extended European Search Report dated Aug. 5, 2015, for Corresponding EP Application No. 12817392.9, 9 pages.
Extended European Search Report dated Aug. 5, 2015, for Corresponding EP Application No. 12818447.0, 17 pages.
Extended European Search Report dated Dec. 17, 2015, for corresponding EP Application No. 12817504.9, 11 pages.
Extended European Search Report dated Dec. 17, 2015, for corresponding EP Application No. 12817905.8, 9 pages.
International Preliminary Report on Patentability and Written Opinion for corresponding International Patent Application No. PCT/US2012/048367, dated Jan. 28, 2014, 4 pages.
International Preliminary Report on Patentability and Written Opinion for corresponding International Patent Application No. PCT/US2012/048379, dated Jan. 28, 2014, 5 pages.
International Preliminary Report on Patentability and Written Opinion for corresponding International Patent Application No. PCT/US2012/048380, dated Jan. 28, 2014, 5 pages.
International Preliminary Report on Patentability and Written Opinion for corresponding International Patent Application No. PCT/US2012/048382, dated Jan. 28, 2014, 5 pages.
International Preliminary Report on Patentability and Written Opinion for corresponding International Patent Application No. PCT/US2012/048391, dated Jan. 28, 2014, 6 pages.
International Search Report and Written Opinion for corresponding International Application No. PCT/US2012/048347, dated Dec. 18, 2012, 8 pages.
International Search Report and Written Opinion for corresponding International Application No. PCT/US2012/048367, dated Jan. 17, 2013, 8 pages.
International Search Report and Written Opinion for corresponding International Application No. PCT/US2012/048379, dated Dec. 17, 2012, 9 pages.
International Search Report and Written Opinion for corresponding International Application No. PCT/US2012/048380, dated Feb. 27, 2013, 9 pages.
International Search Report and Written Opinion for corresponding International Application No. PCT/US2012/048382, dated Feb. 27, 2013, 9 pages.
International Search Report and Written Opinion for corresponding International Application No. PCT/US2012/048391, dated Dec. 21, 2012, 9 pages.
International Search Report and Written Opinion dated Dec. 15, 2015, for corresponding International Application No. PCT/US2015/047946, 3 pages.
International Search Report and Written Opinion dated Jul. 10, 2014, for corresponding International Application No. PCT/US2014/022610, 12 pages.
International Search Report and Written Opinion dated Nov. 11, 2015, for corresponding International Application No. PCT/US2015/044480, 8 pages.
Japanese Office Action dated Dec. 22, 2015, for corresponding JP Application No. 2014-523019, with English translation, 22 pages.
Japanese Office Action dated Jun. 30, 2015, for corresponding JP Application No. 2014-523020, with English Translation, 15 pages.
Japanese Office Action dated Mar. 31, 2015, for corresponding JP Application No. 2014-523014, with English Translation, 9 pages.
Japanese Office Action dated Oct. 20, 2015 for Corresponding JP Application No. 2014-523014, with English Translation, 9 pages.
Japanese Office Action dated Oct. 6, 2015 for Corresponding JP Application No. 2014-523023, with English Translation, 15 pages.
Japanese Office Action dated Sep. 8, 2015, for corresponding JP Application No. 2014-523018, with English Translation, 12 pages.
Luke et al., "Apparatus, Method and Article for Redistributing Power Storage Devices, Such as Batteries, Between Collection, Charging and Distribution Machines," Office Action dated Sep. 14, 2015, for U.S. Appl. No. 13/559,091, 33 pages.
Luke et al., "Apparatus, Method and Article for Reserving Power Storage Devices at Reserving Power Storage Device Collection, Charging and Distribution Machines," Office Action dated Jun. 23, 2015, for U.S. Appl. No. 13/559,064, 32 pages.
Luke et al., "Apparatus, Method and Article for Authentication, Security and Control of Power Storage Devices, Such as Batteries, Based on User Profiles," Office Action dated May 11, 2015, for U.S. Appl. No. 13/559,010, 26 pages.
Luke et al., "Apparatus, Method and Article for Authentication, Security and Control of Power Storage Devices, Such as Batteries, Based on User Profiles," U.S. Appl. No. 61/534,772, filed Sep. 14, 2011, 55 pages.
Luke et al., "Apparatus, Method and Article for Collection, Charging and Distributing Power Storage Devices, Such as Batteries," U.S. Appl. No. 61/511,900, filed Jul. 26, 2011, 73 pages.
Luke et al., "Apparatus, Method and Article for Collection, Charging and Distributing Power Storage Devices, Such as Batteries," Notice of Allowance dated Jun. 8, 2015, for U.S. Appl. No. 13/559,314, 12 pages.
Luke et al., "Apparatus, Method and Article for Collection, Charging and Distributing Power Storage Devices, Such as Batteries," U.S. Appl. No. 61/647,936, filed May 16, 2012, 76 pages.
Luke et al., "Apparatus, Method and Article for Redistributing Power Storage Devices, Such as Batteries, Between Collection, Charging and Distribution Machines," Office Action dated Mar. 13, 2015, for U.S. Appl. No. 13/559,091, 33 pages.
Luke et al., "Apparatus, Method and Article for Redistributing Power Storage Devices, Such as Batteries, Between Collection, Charging and Distribution Machines," U.S. Appl. No. 61/534,753, filed Sep. 14, 2011, 65 pages.
Luke et al., "Modular System for Collection and Distribution of Electric Storage Devices," U.S. Appl. No. 61/789,065, filed Mar. 15, 2013, 76 pages.

(56) **References Cited**

OTHER PUBLICATIONS

Microchip, "AN885: Brushless DC (BLDC) Motor Fundamentals," Microchip Technology Inc., 2003, 19 pages.
Park, "A Comprehensive Thermal Management System Model for Hybrid Electric Vehicles," dissertation, The University of Michigan, 2011, 142 pages.
Taiwanese Office Action dated Aug. 19, 2015, for corresponding TW Application No. 101127036, with English Translation, 25 pages.
Taiwanese Office Action dated Sep. 15, 2015, for corresponding TW Application No. 101127034, with English Translation, 7 pages.
Taiwanese Office Action dated Sep. 21, 2015, for corresponding TW Application No. 101127038, with English Translation, 50 pages.
Wu et al., "Apparatus, Method and Article for Providing Information Regarding Availability of Power Storage Devices at a Power Storage Device Collection, Charging and Distribution Machine," Office Action dated Mar. 5, 2014, for U.S. Appl. No. 14/022,140, 8 pages.
Wu et al., "Apparatus, Method and Article for Providing Information Regarding Availability of Power Storage Devices at a Power Storage Device Collection, Charging and Distribution Machine," U.S. Appl. No. 61/601,953, filed Feb. 22, 2012, 53 pages.
Wu et al., "Apparatus, Method and Article for Providing Locations of Power Storage Device Collection, Charging and Distribution Machines," Notice of Allowance dated Jul. 10, 2014, for U.S. Appl. No. 13/559,333, 9 pages.
Wu et al., "Apparatus, Method and Article for Providing Locations of Power Storage Device Collection, Charging and Distribution Machines," Notice of Allowance dated Nov. 25, 2014, for U.S. Appl. No. 14/022,147, 5 pages.
Wu et al., "Apparatus, Method and Article for Providing Locations of Power Storage Device Collection, Charging and Distribution Machines," Office Action for U.S. Appl. No. 13/559,333, dated Jul. 3, 2013, 14 pages.
Wu et al., "Apparatus, Method and Article for Providing Locations of Power Storage Device Collection, Charging and Distribution Machines," Office Action dated Nov. 19, 2013, for U.S. Appl. No. 14/022,147, 10 pages.
Wu et al., "Apparatus, Method and Article for Providing Locations of Power Storage Device Collection, Charging and Distribution Machines," Office Action dated Nov. 27, 2013, for U.S. Appl. No. 13/559,333, 19 pages.
Wu et al., "Apparatus, Method and Article for Providing Locations of Power Storage Device Collection, Charging and Distribution Machines," U.S. Appl. No. 61/601,949, filed Feb. 22, 2012, 56 pages.
Wu et al., "Apparatus, Method and Article for Providing Locations of Power Storage Device Collection, Charging and Distribution Machines," Office Action dated Mar. 5, 2014, for U.S. Appl. No. 14/022,147, 12 pages.
Wu et al., "Apparatus, Method and Article for Providing Locations of Power Storage Device Collection, Charging and Distribution Machines," Office Action dated Aug. 6, 2014, for U.S. Appl. No. 14/022,147, 17 pages.
Wu et al., "Apparatus, Method and Article for Providing to a User Device Information Regarding Availability of Portable Electrical Energy Storage Devices at a Portable Electrical Energy Storage Device Collection, Charging and Distribution Machine," Notice of Allowance dated Jun. 30, 2014, for U.S. Appl. No. 14/022,140, 5 pages.
Wu et al., "Apparatus, Method and Article for Providing to a User Device Information Regarding Availability of Portable Electrical Energy Storage Devices at a Portable Electrical Storage Device Collection, Charging and Distribution Machine," U.S. Appl. No. 14/511,137, filed Oct. 9, 2014, 56 pages.

* cited by examiner

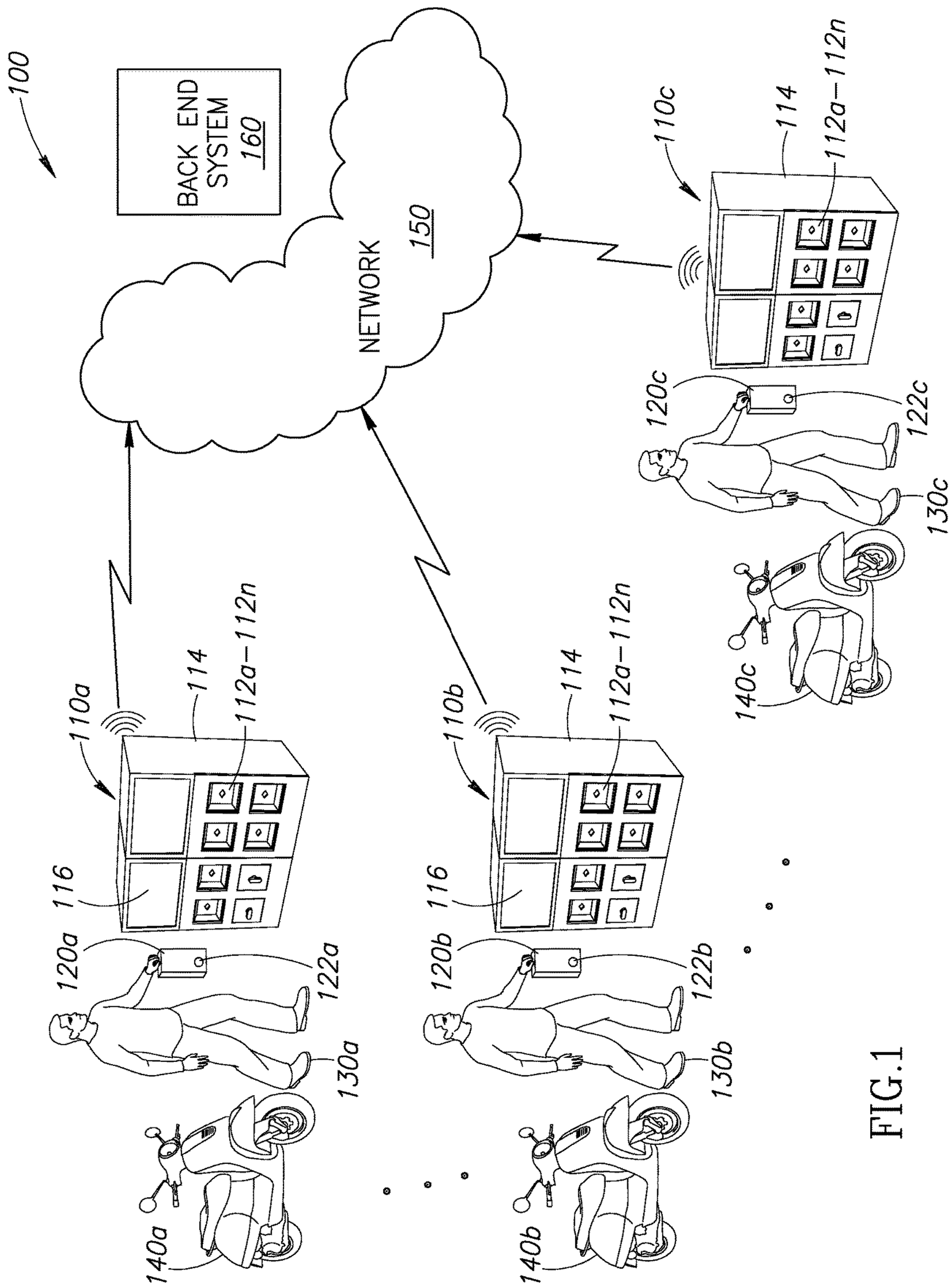
100
BACK END SYSTEM 160
NETWORK 150
110a
110b
110c
114
112a–112n
116
120a
120b
120c
122a
122b
122c
130a
130b
130c
140a
140b
140c

FIG.1

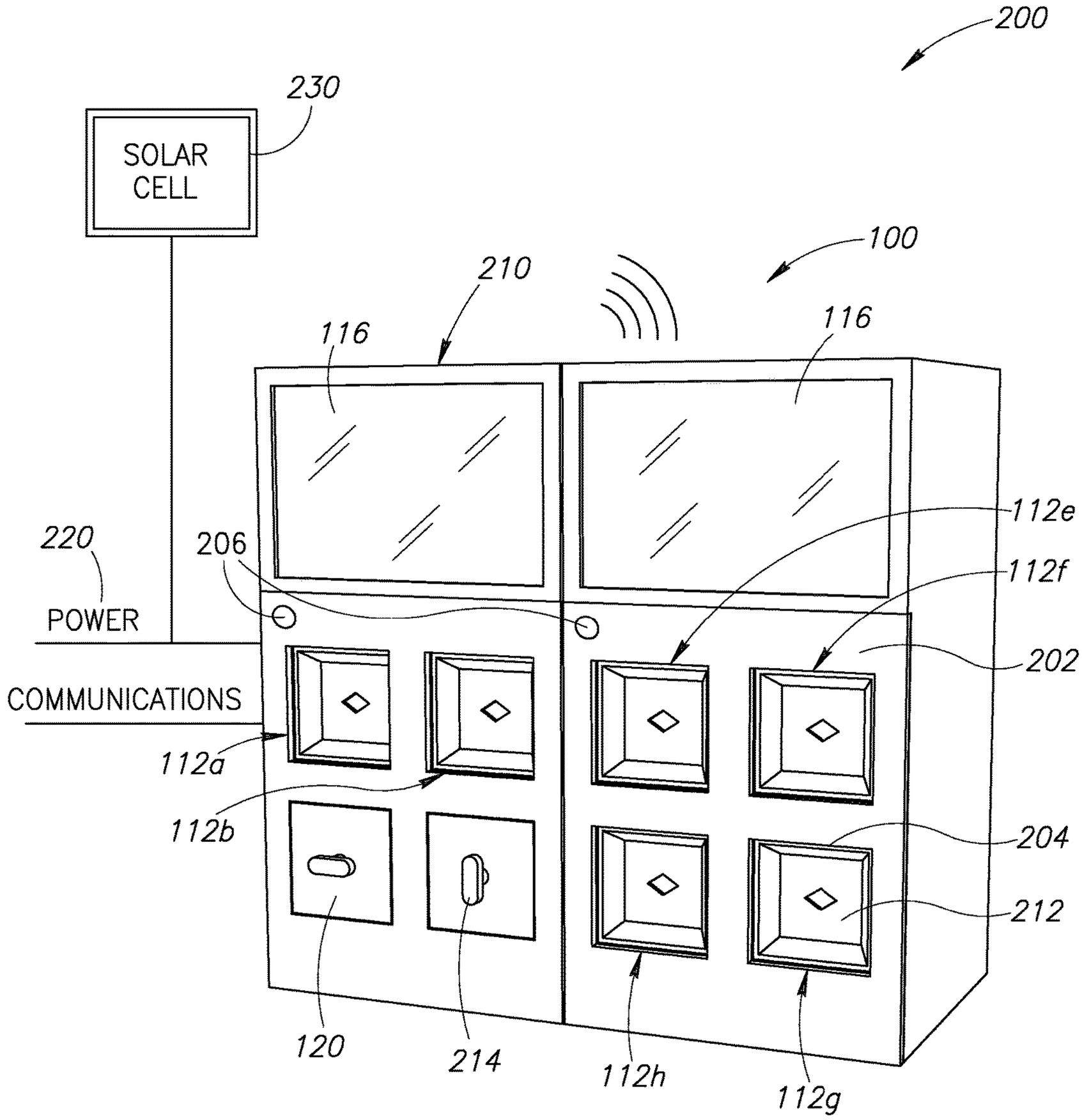
200
230
SOLAR CELL
100
210
116
116
112e
220
206
112f
POWER
202
COMMUNICATIONS
112a
112b
204
212
120
214
112h
112g

FIG.2A

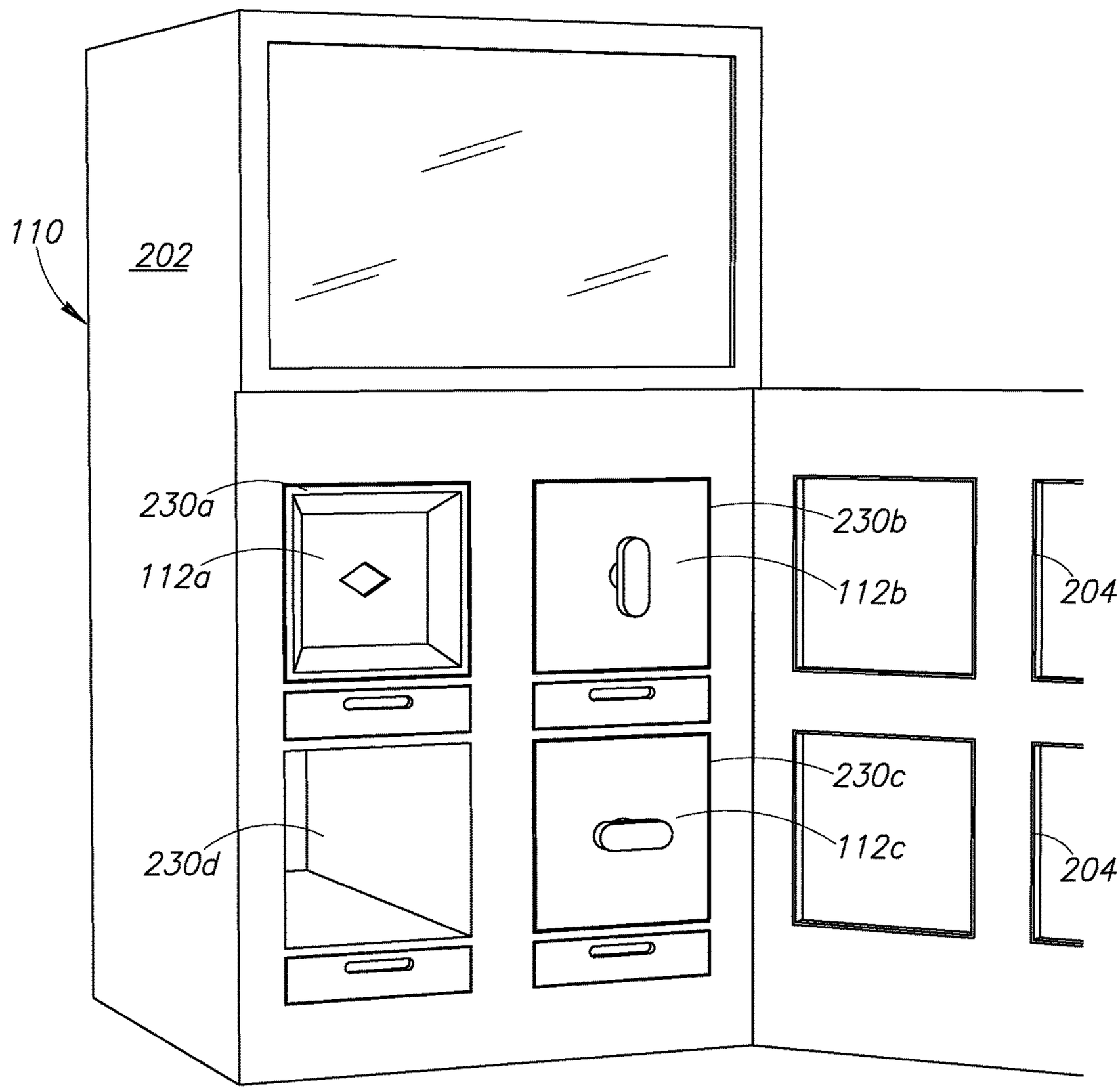


FIG.2B

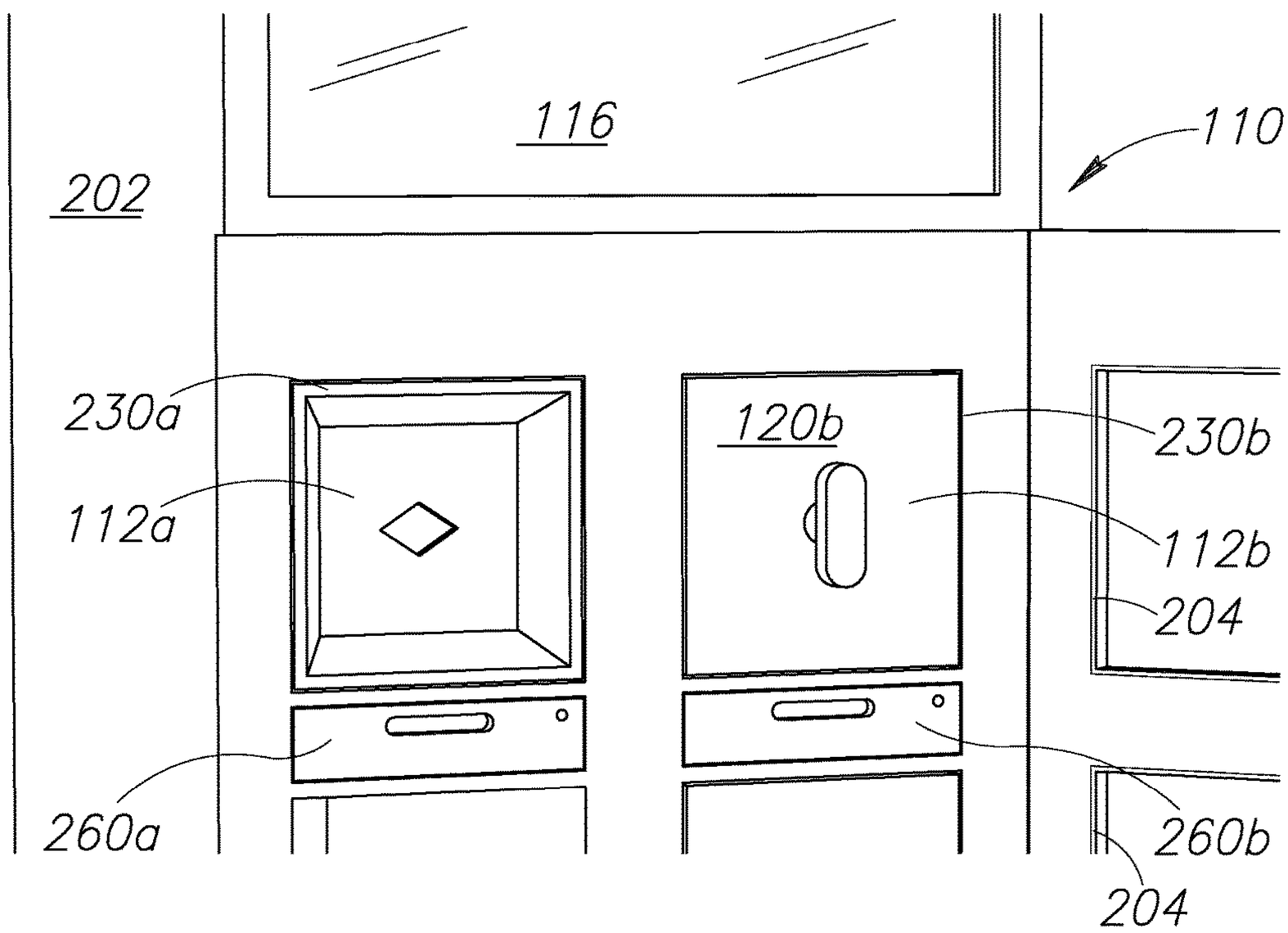


FIG.2C

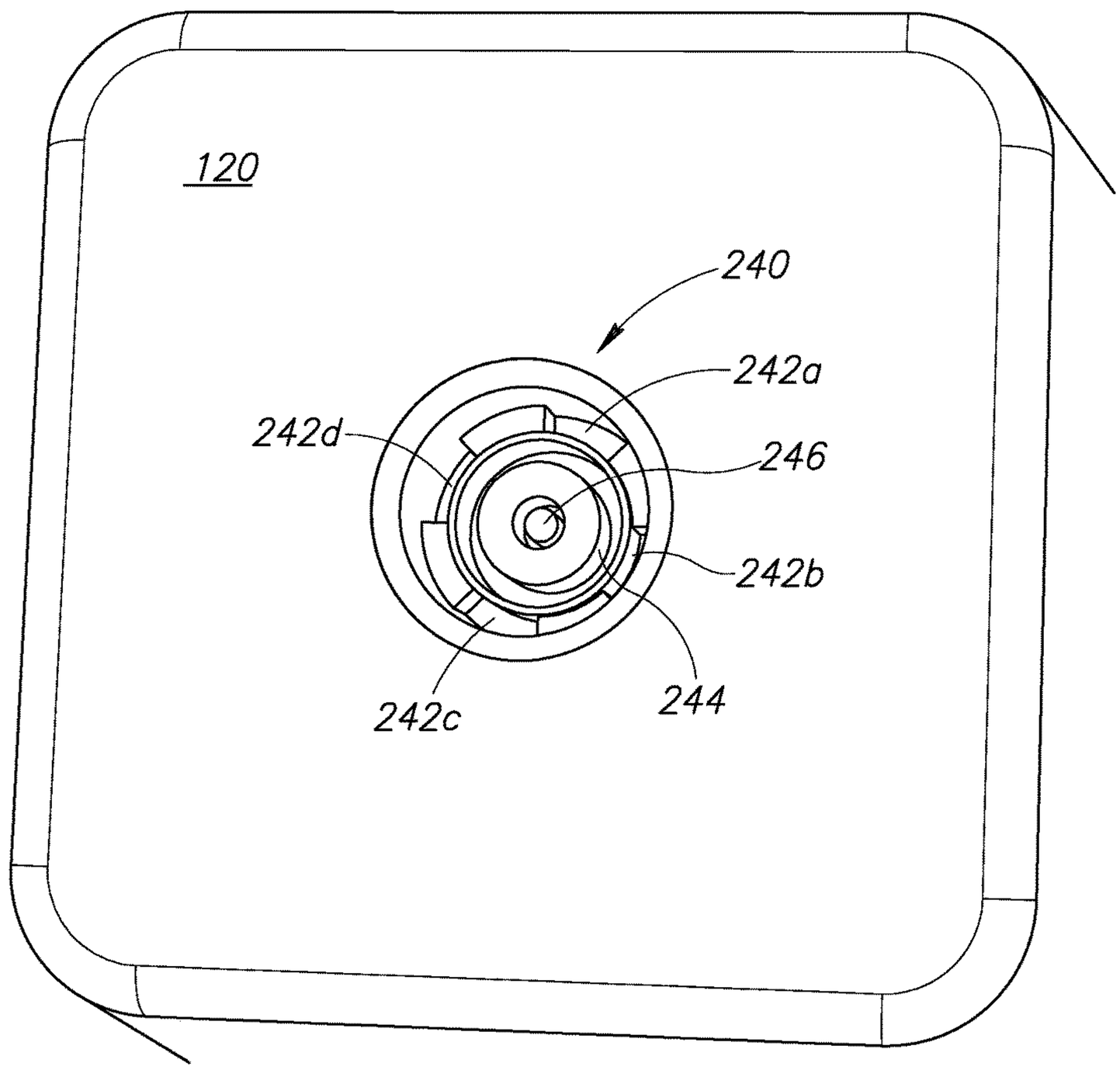


FIG.2D

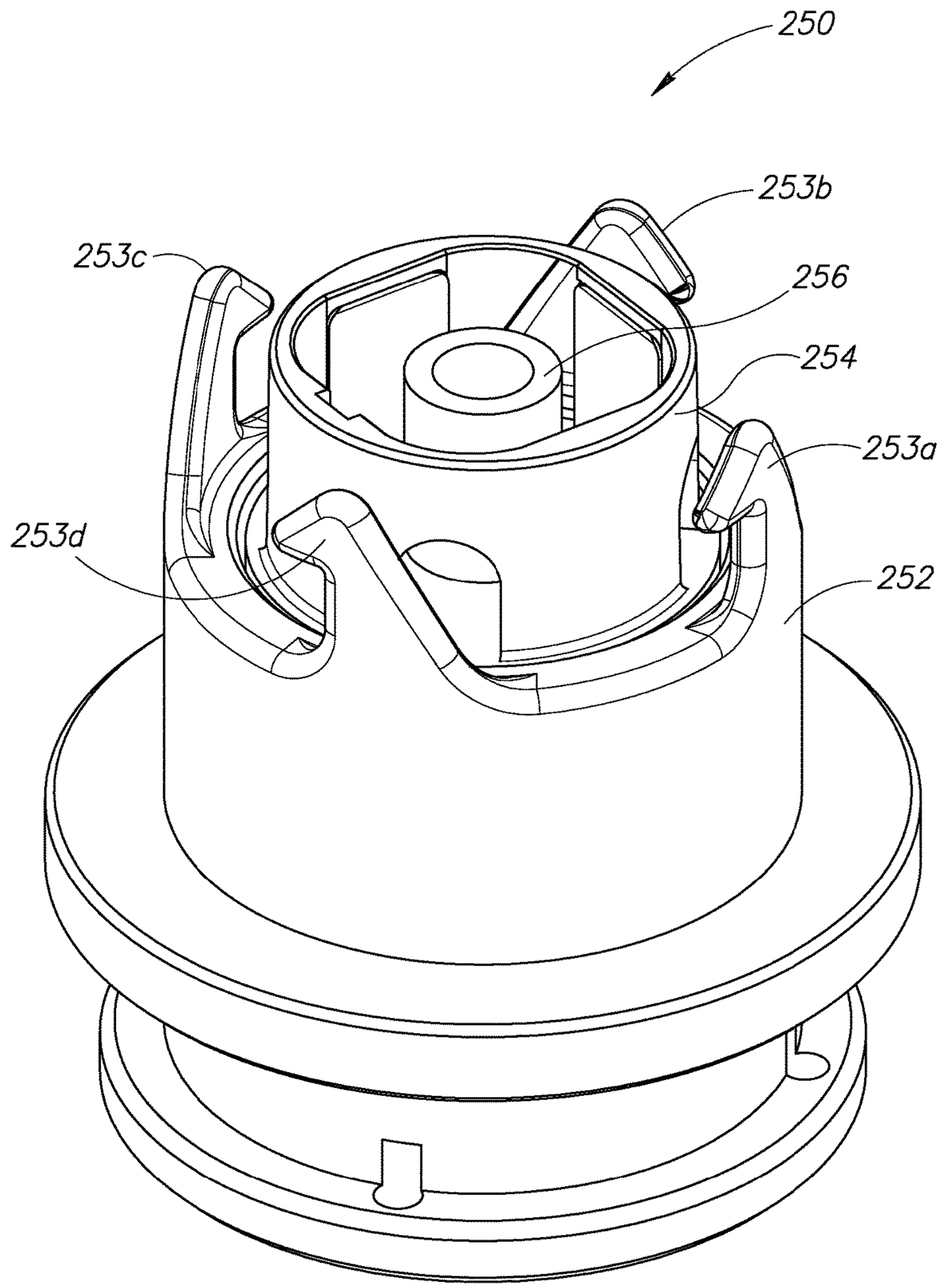


FIG.2E

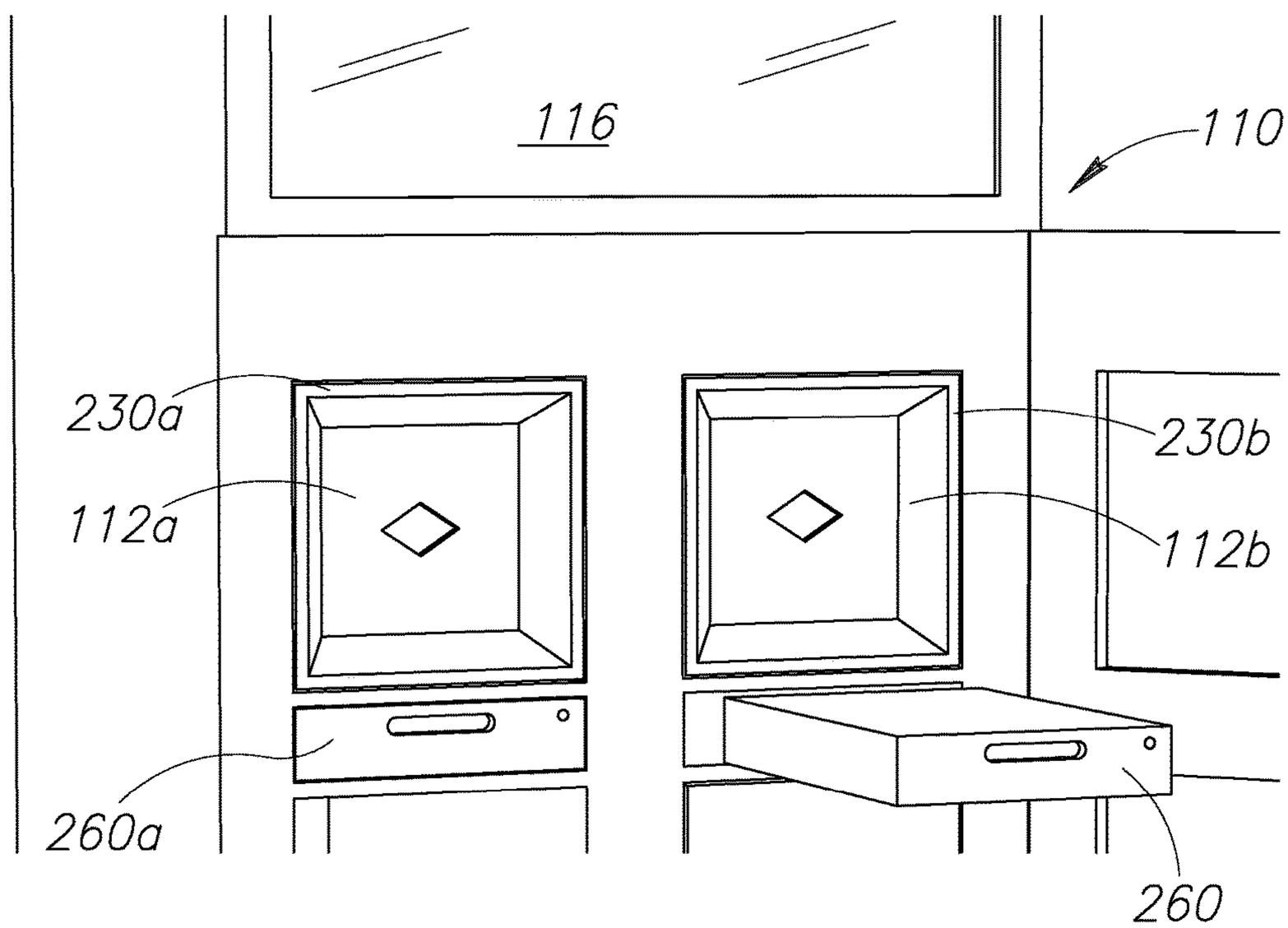


FIG.2F

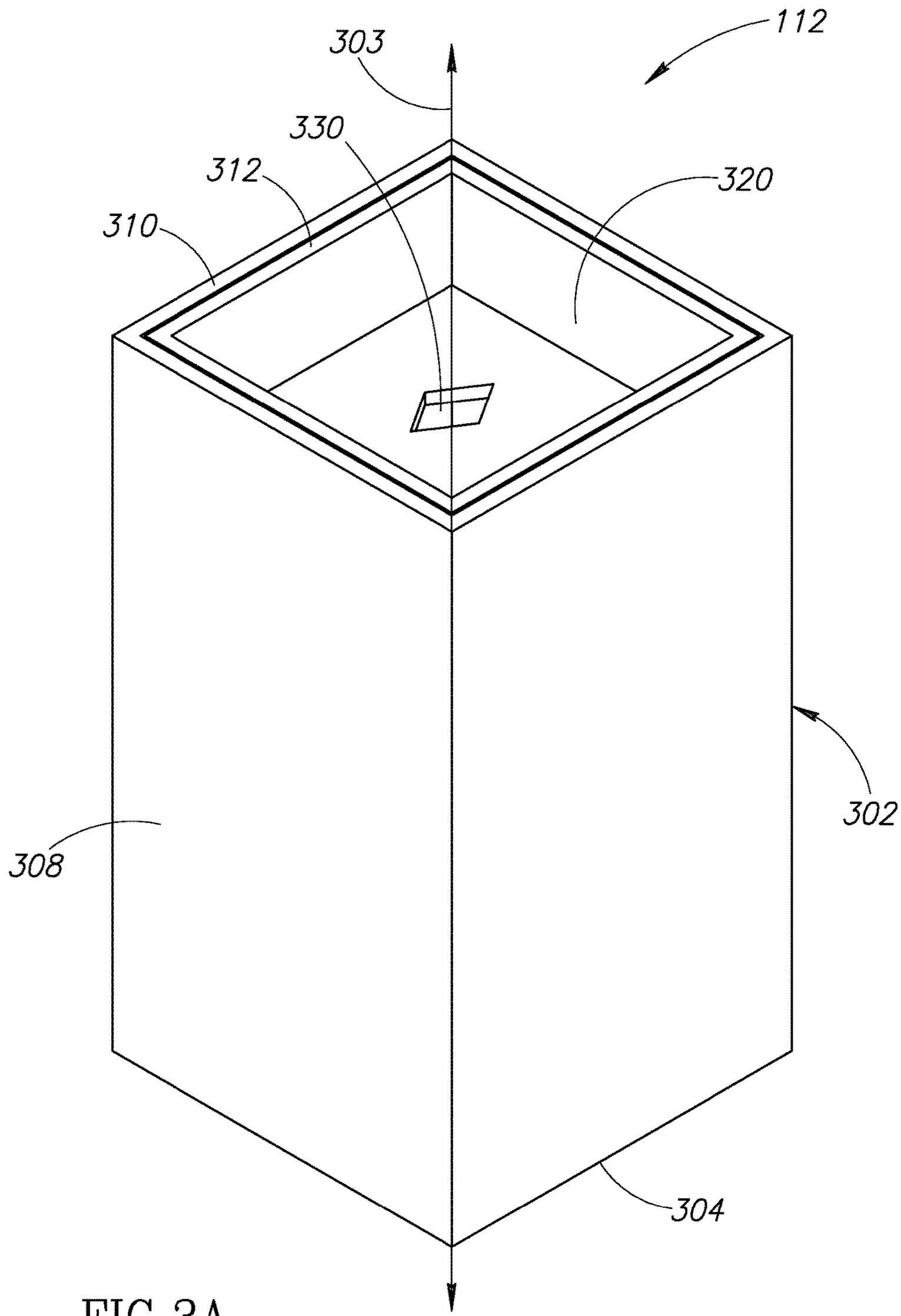


FIG.3A

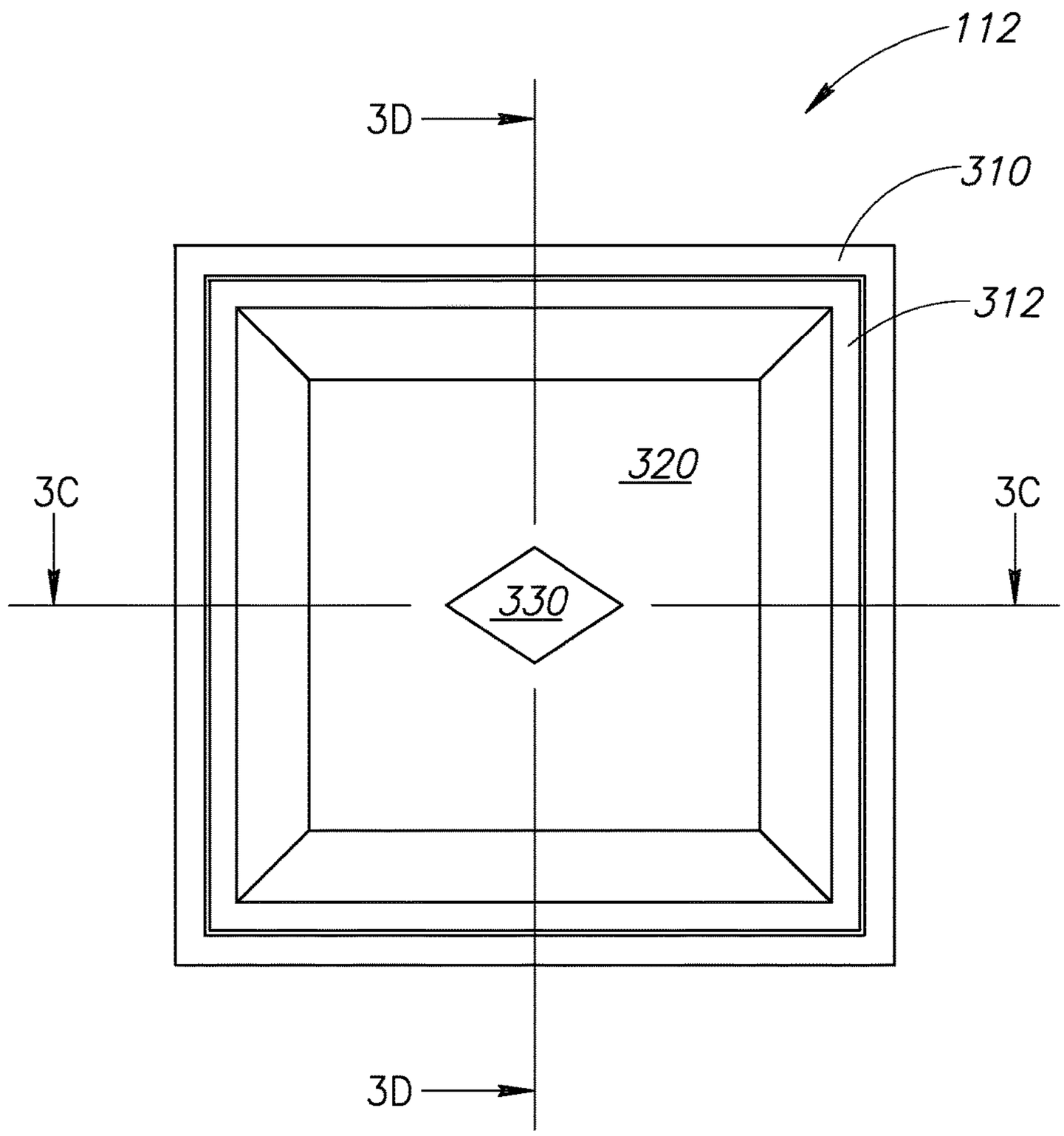


FIG.3B

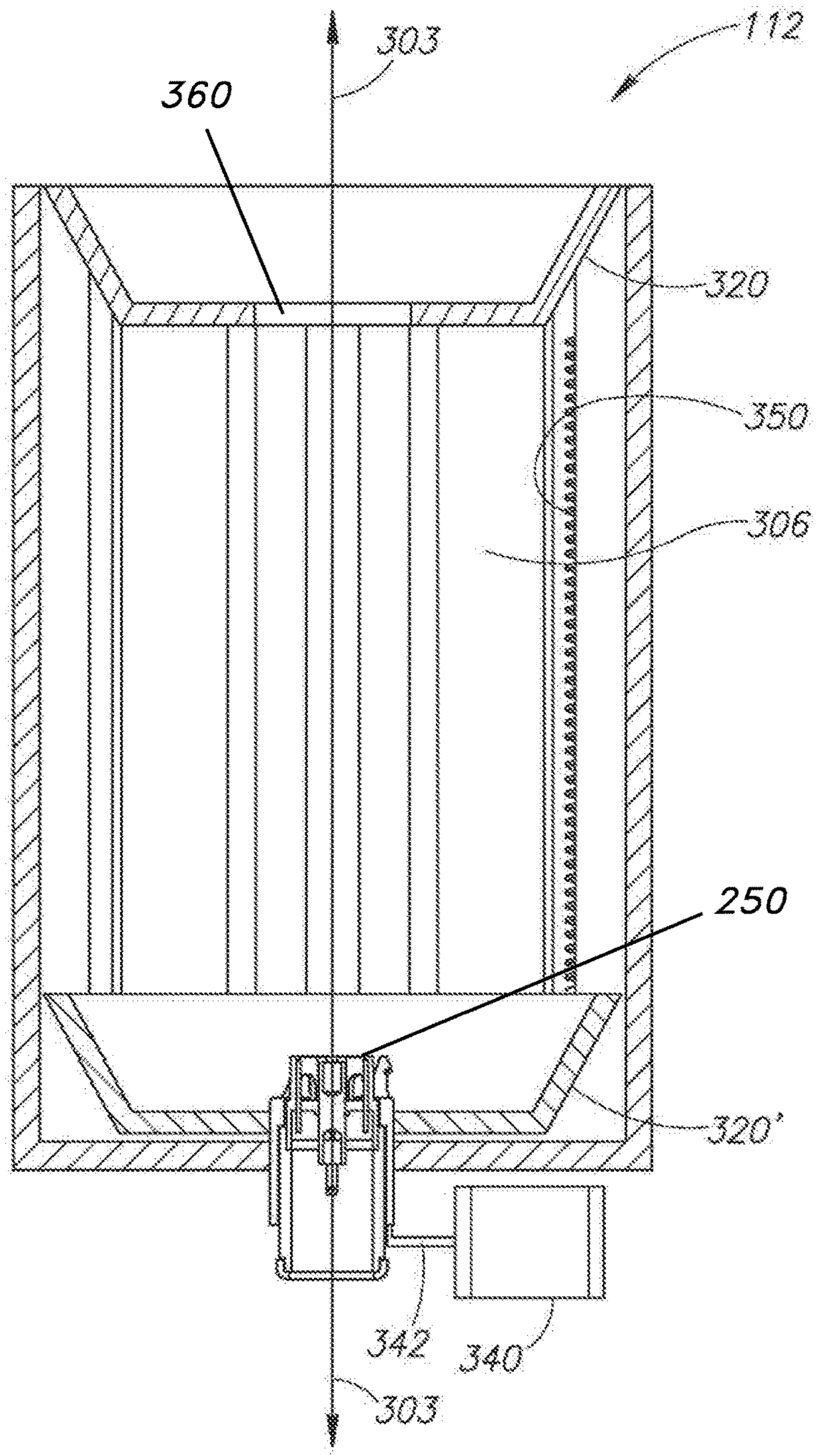


FIG.3C

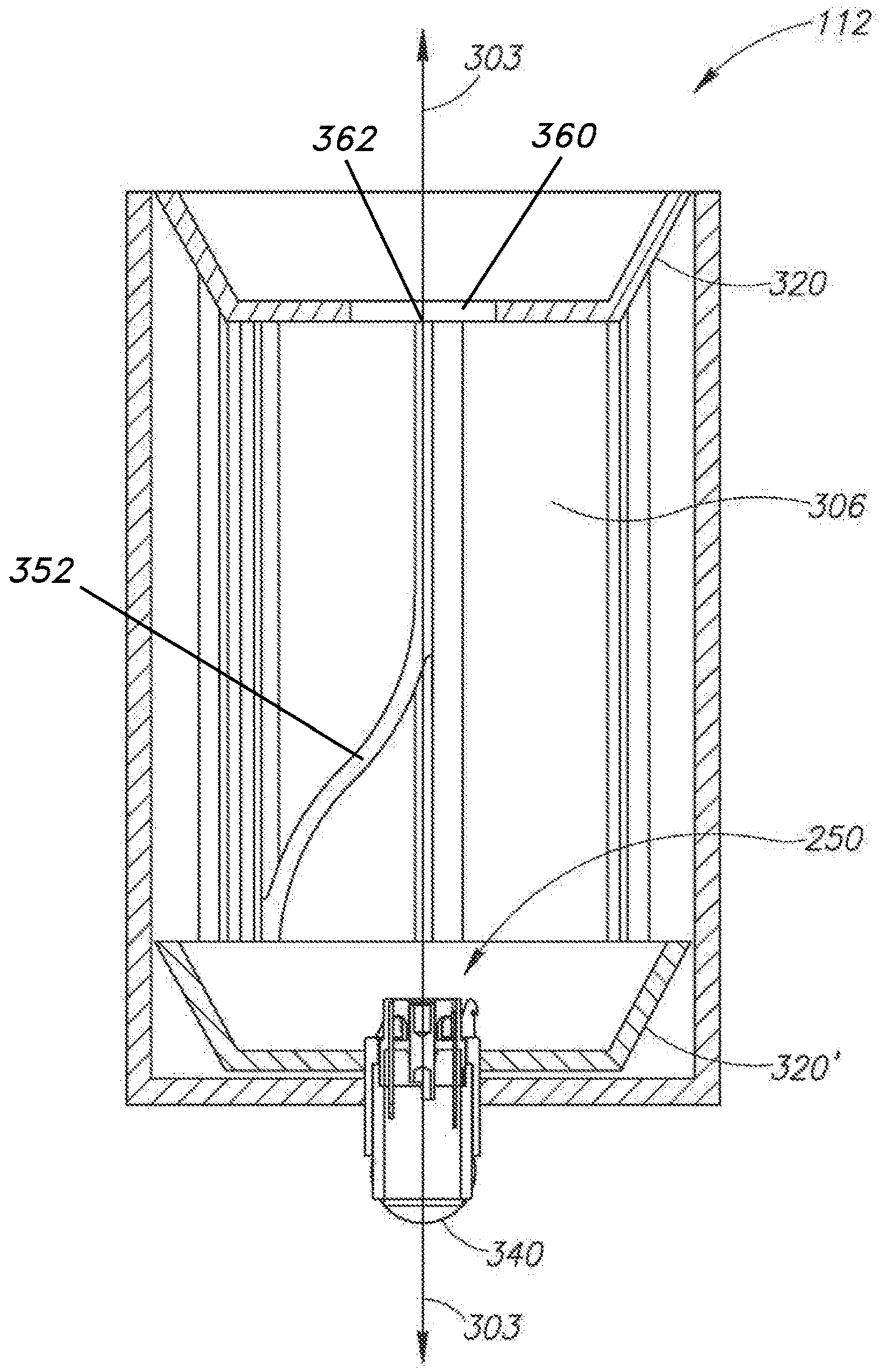


FIG.3D

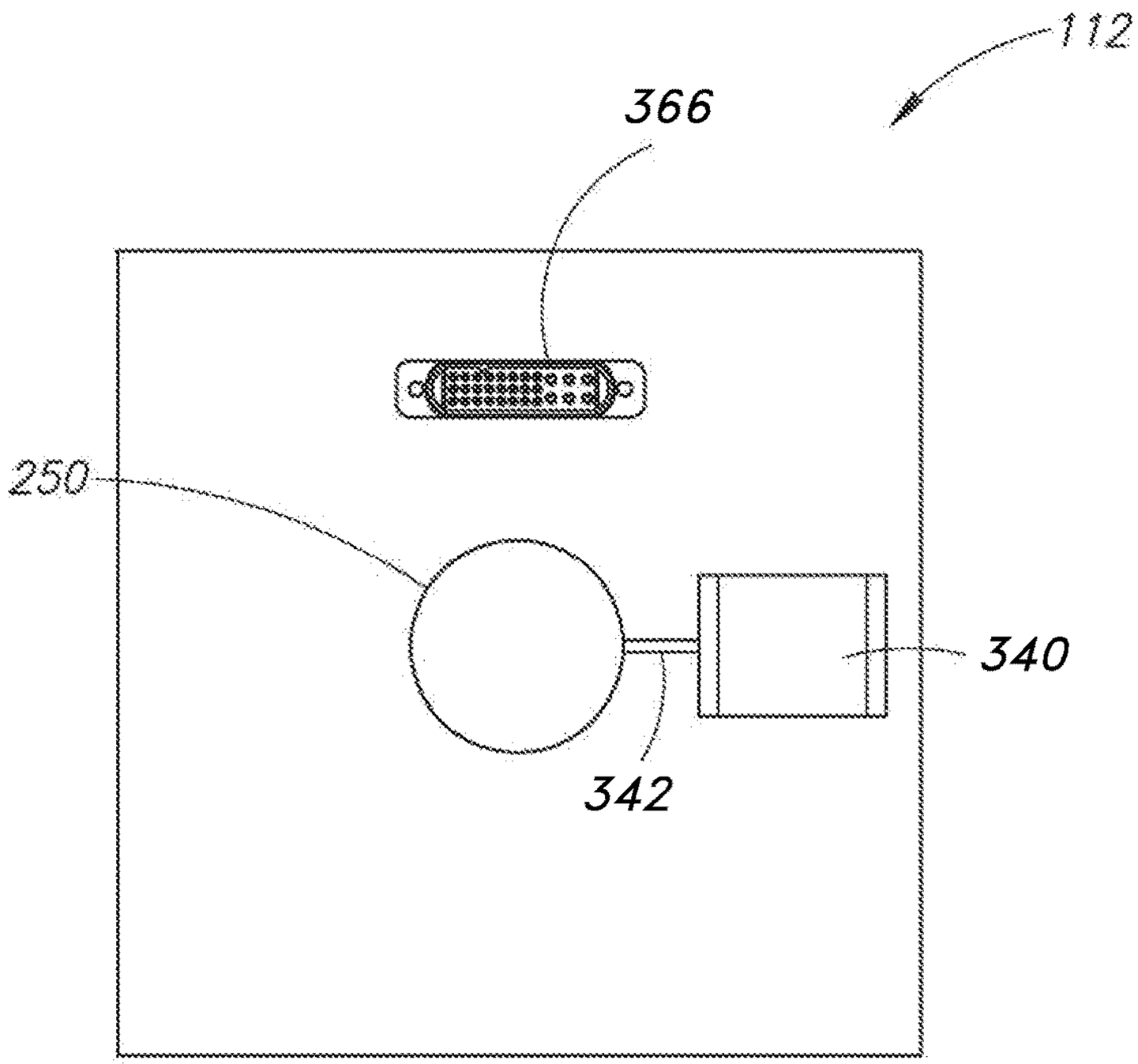


FIG.3E

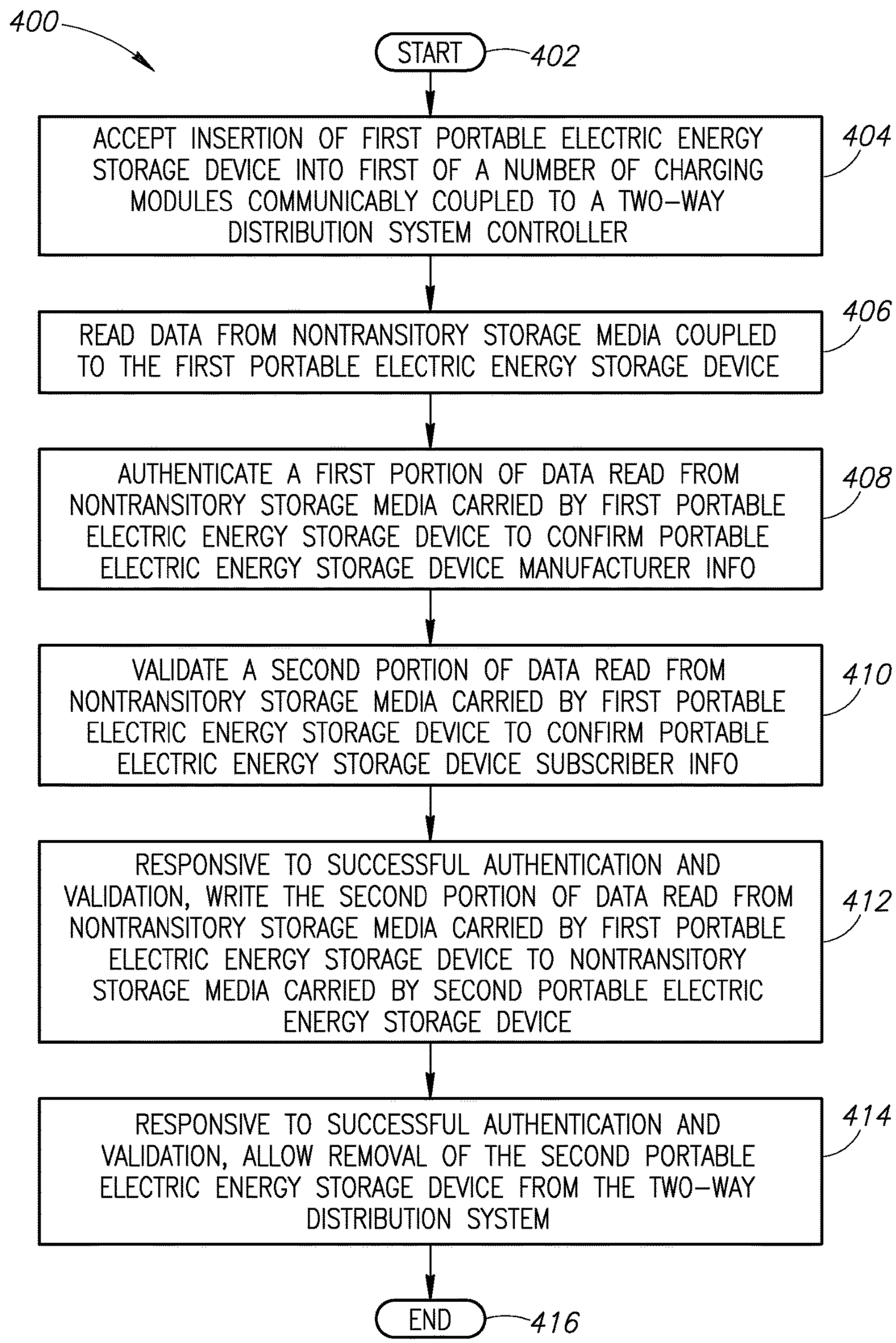
400
START
402
ACCEPT INSERTION OF FIRST PORTABLE ELECTRIC ENERGY STORAGE DEVICE INTO FIRST OF A NUMBER OF CHARGING MODULES COMMUNICABLY COUPLED TO A TWO-WAY DISTRIBUTION SYSTEM CONTROLLER
404
READ DATA FROM NONTRANSITORY STORAGE MEDIA COUPLED TO THE FIRST PORTABLE ELECTRIC ENERGY STORAGE DEVICE
406
AUTHENTICATE A FIRST PORTION OF DATA READ FROM NONTRANSITORY STORAGE MEDIA CARRIED BY FIRST PORTABLE ELECTRIC ENERGY STORAGE DEVICE TO CONFIRM PORTABLE ELECTRIC ENERGY STORAGE DEVICE MANUFACTURER INFO
408
VALIDATE A SECOND PORTION OF DATA READ FROM NONTRANSITORY STORAGE MEDIA CARRIED BY FIRST PORTABLE ELECTRIC ENERGY STORAGE DEVICE TO CONFIRM PORTABLE ELECTRIC ENERGY STORAGE DEVICE SUBSCRIBER INFO
410
RESPONSIVE TO SUCCESSFUL AUTHENTICATION AND VALIDATION, WRITE THE SECOND PORTION OF DATA READ FROM NONTRANSITORY STORAGE MEDIA CARRIED BY FIRST PORTABLE ELECTRIC ENERGY STORAGE DEVICE TO NONTRANSITORY STORAGE MEDIA CARRIED BY SECOND PORTABLE ELECTRIC ENERGY STORAGE DEVICE
412
RESPONSIVE TO SUCCESSFUL AUTHENTICATION AND VALIDATION, ALLOW REMOVAL OF THE SECOND PORTABLE ELECTRIC ENERGY STORAGE DEVICE FROM THE TWO-WAY DISTRIBUTION SYSTEM
414
END
416

FIG.4

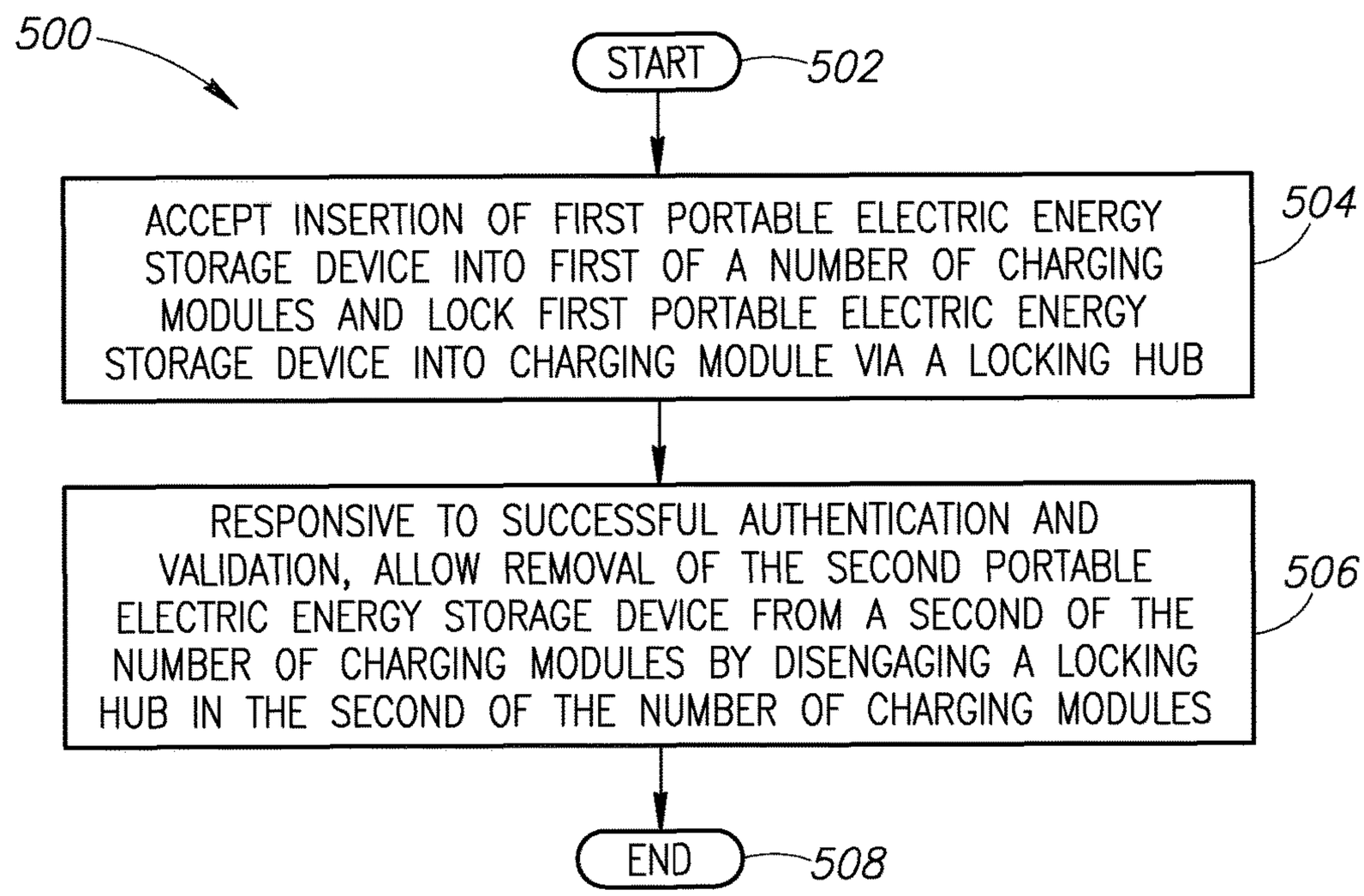
500
START
502
ACCEPT INSERTION OF FIRST PORTABLE ELECTRIC ENERGY STORAGE DEVICE INTO FIRST OF A NUMBER OF CHARGING MODULES AND LOCK FIRST PORTABLE ELECTRIC ENERGY STORAGE DEVICE INTO CHARGING MODULE VIA A LOCKING HUB
504
RESPONSIVE TO SUCCESSFUL AUTHENTICATION AND VALIDATION, ALLOW REMOVAL OF THE SECOND PORTABLE ELECTRIC ENERGY STORAGE DEVICE FROM A SECOND OF THE NUMBER OF CHARGING MODULES BY DISENGAGING A LOCKING HUB IN THE SECOND OF THE NUMBER OF CHARGING MODULES
506
END
508

FIG.5

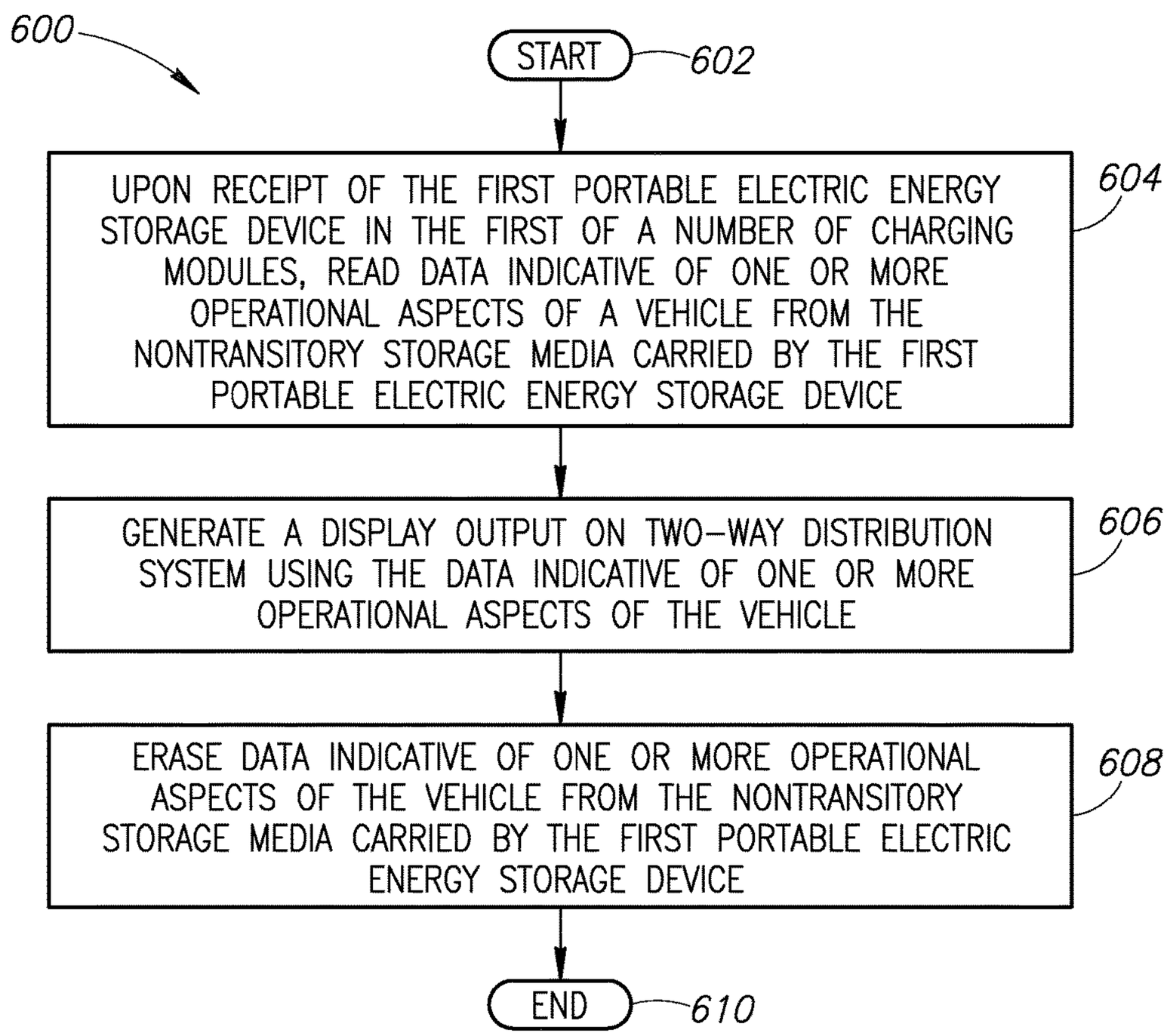
600
START
602
UPON RECEIPT OF THE FIRST PORTABLE ELECTRIC ENERGY STORAGE DEVICE IN THE FIRST OF A NUMBER OF CHARGING MODULES, READ DATA INDICATIVE OF ONE OR MORE OPERATIONAL ASPECTS OF A VEHICLE FROM THE NONTRANSITORY STORAGE MEDIA CARRIED BY THE FIRST PORTABLE ELECTRIC ENERGY STORAGE DEVICE
604
GENERATE A DISPLAY OUTPUT ON TWO-WAY DISTRIBUTION SYSTEM USING THE DATA INDICATIVE OF ONE OR MORE OPERATIONAL ASPECTS OF THE VEHICLE
606
ERASE DATA INDICATIVE OF ONE OR MORE OPERATIONAL ASPECTS OF THE VEHICLE FROM THE NONTRANSITORY STORAGE MEDIA CARRIED BY THE FIRST PORTABLE ELECTRIC ENERGY STORAGE DEVICE
608
END
610

FIG.6

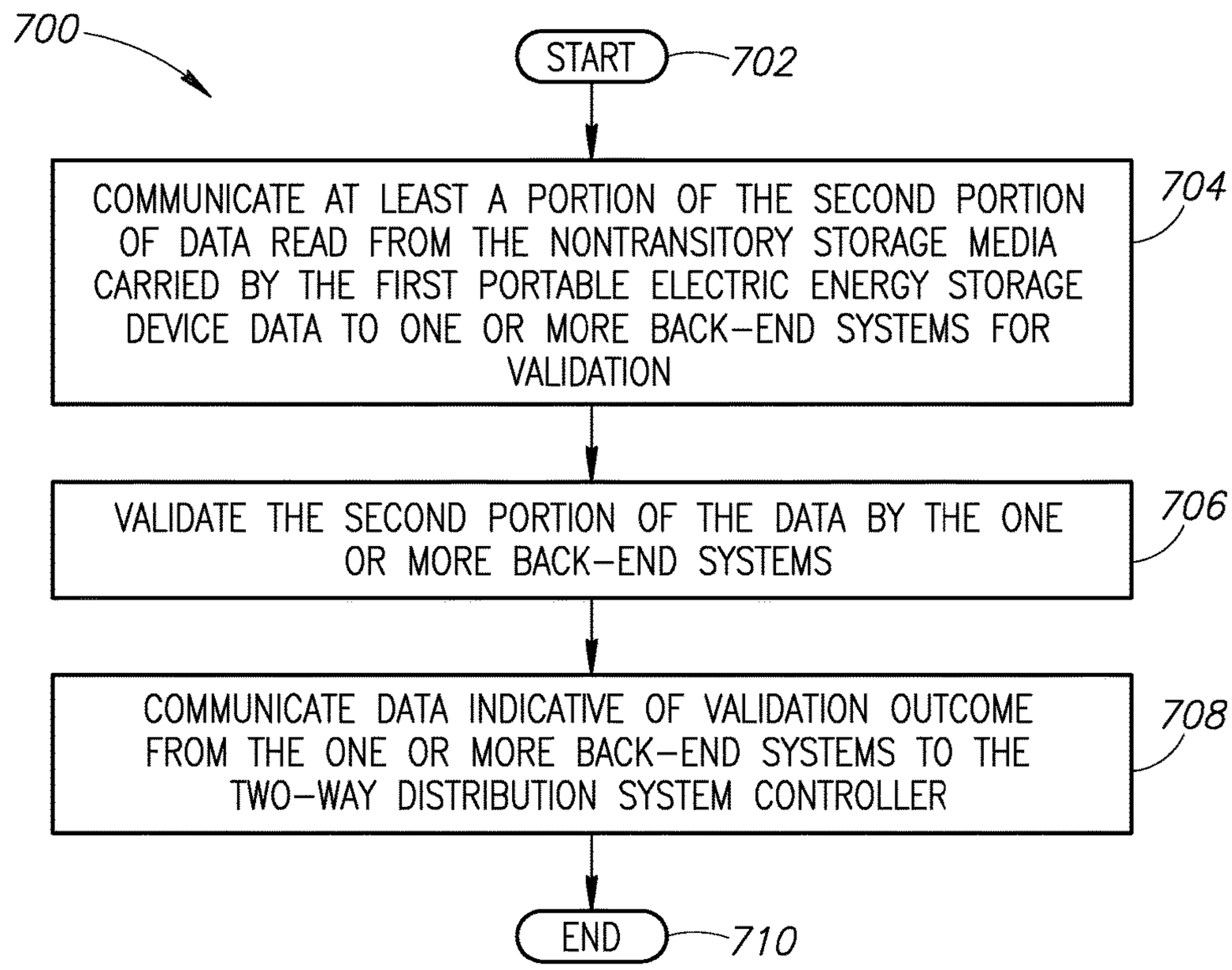
700
START
702
COMMUNICATE AT LEAST A PORTION OF THE SECOND PORTION OF DATA READ FROM THE NONTRANSITORY STORAGE MEDIA CARRIED BY THE FIRST PORTABLE ELECTRIC ENERGY STORAGE DEVICE DATA TO ONE OR MORE BACK-END SYSTEMS FOR VALIDATION
704
VALIDATE THE SECOND PORTION OF THE DATA BY THE ONE OR MORE BACK-END SYSTEMS
706
COMMUNICATE DATA INDICATIVE OF VALIDATION OUTCOME FROM THE ONE OR MORE BACK-END SYSTEMS TO THE TWO-WAY DISTRIBUTION SYSTEM CONTROLLER
708
END
710

FIG.7

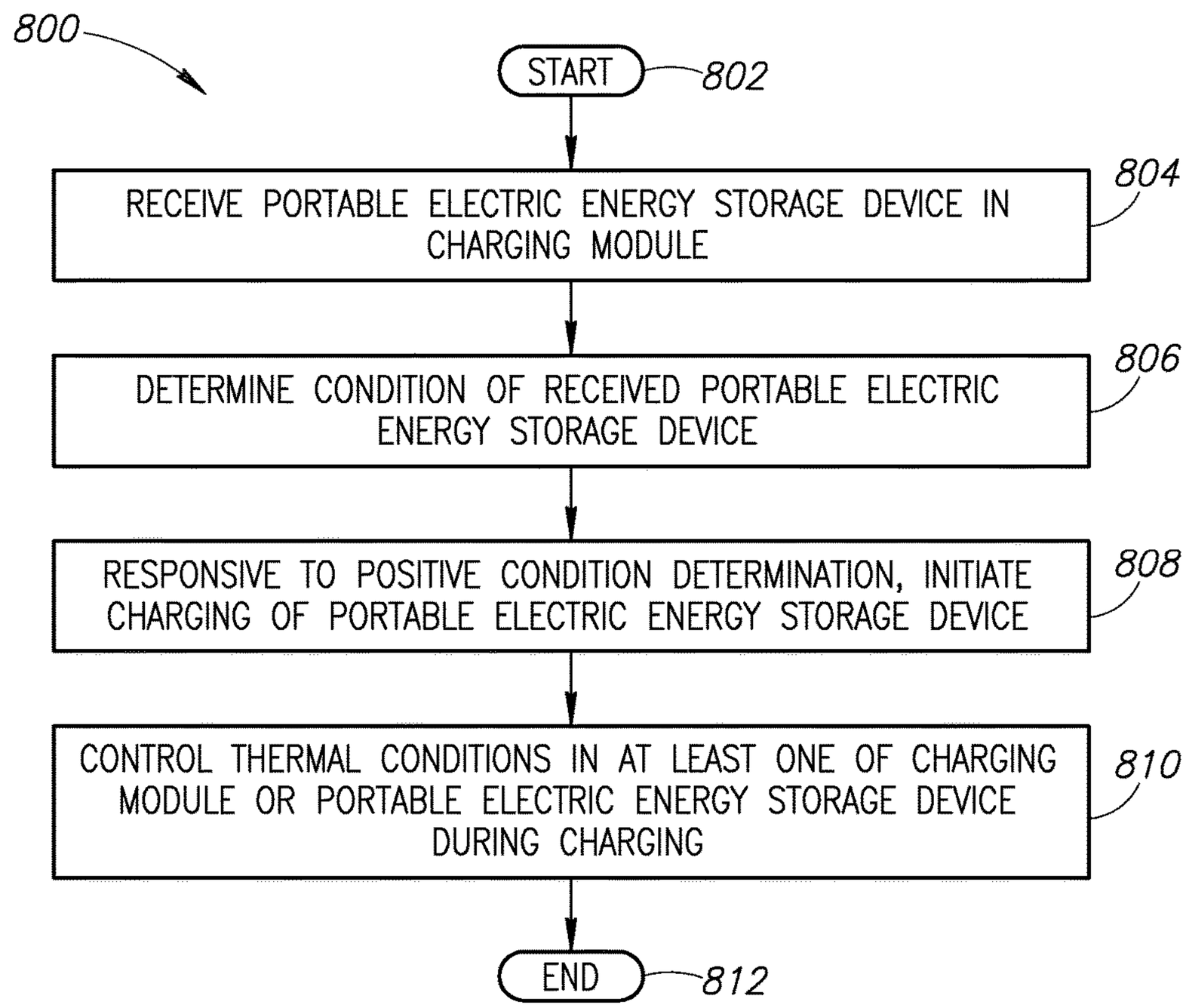
800
START
802
RECEIVE PORTABLE ELECTRIC ENERGY STORAGE DEVICE IN CHARGING MODULE
804
DETERMINE CONDITION OF RECEIVED PORTABLE ELECTRIC ENERGY STORAGE DEVICE
806
RESPONSIVE TO POSITIVE CONDITION DETERMINATION, INITIATE CHARGING OF PORTABLE ELECTRIC ENERGY STORAGE DEVICE
808
CONTROL THERMAL CONDITIONS IN AT LEAST ONE OF CHARGING MODULE OR PORTABLE ELECTRIC ENERGY STORAGE DEVICE DURING CHARGING
810
END
812

FIG.8

# APPARATUS, SYSTEM, AND METHOD FOR VENDING, CHARGING, AND TWO-WAY DISTRIBUTION OF ELECTRICAL ENERGY STORAGE DEVICES

## BACKGROUND

Technical Field

The present disclosure generally relates to the vending, charging, and two-way distribution of electrical energy storage devices.

Description of the Related Art

Electric powered vehicles are gaining in popularity worldwide. One of the primary impediments to widespread acceptance of electric or battery powered vehicles is the ready availability of charged portable electrical energy storage devices to avoid leaving drivers stranded for extended periods while recharging. This issue is particularly acute in regions and areas that are susceptible to interruptions in electrical distribution and/or delivery. Providing a readily available source of charged portable electric storage devices in a number of convenient locations may ameliorate the worries of many drivers and may foster the widespread acceptance of electric vehicles, particularly in highly congested urban areas. Adoption of electric vehicle technology on a widespread basis may assist in improving air quality in regions where vehicle and other minimally regulated mobile emission sources are prevalent.

## BRIEF SUMMARY

The Applicants have advantageously developed a vehicle, e.g., scooter powered by modular portable electrical energy storage devices. A network of portable electric energy storage device two-way distribution, charging, and vending systems positioned throughout an area supports the vehicles by exchanging discharged or depleted portable electrical energy storage devices for charged portable electrical energy storage devices. By reducing the recharging process to a simple, "drop off a discharged battery and pick up a charged battery" concept, drivers receive a sense of reassurance similar to that provided by fossil fuel stations in fossil fueled vehicles. Each of the two-way distribution, charging, and vending systems may optionally provide additional services that improve or enhance the sense of value to drivers. For example, a two-way distribution, charging, and vending system may have ability to perform one or more diagnostic procedures on a vehicle and provide output to the driver indicative of the results of the diagnostic procedures.

In a typical example, a driver acquires a vehicle powered by one or more portable electrical energy storage devices and subscribes to a plan offered by the vehicle manufacturer or portable electrical energy storage device supplier that permits the two-way exchange of depleted or partially/completely discharged portable electrical energy storage devices at any two-way distribution, charging, and vending system within the manufacturer's network. Such two-way distribution, charging, and vending systems can be positioned at any point where electrical power and wired or wireless communications capabilities are available.

The two-way distribution, charging, and vending system includes at least one two-way distribution system controller, a power distribution system, at least one communications interface, and a rigid structure that includes a number of receptacles or "buckets." Each of the buckets can accept a slideably insertable power converter module that converts power supplied by a power distribution system (e.g., public or private power grid, solar cell or other renewable energy sources) to a form and voltage suitable for charging a portable electric energy storage device. Each of the buckets can further accept the slideable insertion of a charging module which is electrically conductively coupled to and receives power from the modular power converter and is wiredly or wirelessly communicably coupled to the at least one two-way distribution system controller.



A subscriber inserts a partially or completely discharged portable electrical energy storage device into a first (empty) charging module in the two-way distribution, charging, and vending system. Upon receipt of the portable electrical energy storage device from the subscriber, the two-way distribution system controller authenticates the portable electrical energy storage device by reading a manufacturer identifier stored in a nontransitory storage media carried by the portable electric energy storage device. The controller also validates a subscriber identifier read from the nontransitory storage media carried by the portable electric energy storage device provided by the subscriber to confirm the subscription is current and to determine any services to which the subscriber may be entitled.

After authenticating the portable electrical energy storage device and validating the subscriber, the controller unlocks/releases one or more charged portable electrical energy storage devices from one or more second charging modules. The subscriber is able to remove the charged portable electrical energy storage device from the second charging module. The time required to perform such an exchange is minimal and is advantageously comparable to the time required to fill a conventional vehicle's fuel tank.

A number of charging modules are inserted into buckets in the two-way distribution, charging, and vending system. Each of the charging modules is equipped with one or more modular connectors or interfaces that communicably couple the charging module to the power distribution system (e.g., busses and laterals) upon seating within the bucket. Each of the charging modules is further equipped with at least one of a wired or a wireless communications module that autonomously wiredly or wirelessly communicably couples to the two-way distribution system controller upon seating the charging module into the bucket.

The modular design of the charging modules eliminates the need to field-service a malfunctioning charging module, a significant advantage in areas where inclement weather is common and access to electronic diagnostic tools is limited. Each charging module is electrically isolated from every other charging module in the two-way distribution, charging, and vending system, thus a failure of a single charging module does not adversely affect the operation of other charging modules or the two-way distribution, charging, and vending system as a whole. The two-way distribution, charging, and vending systems may include a modular construction that enables the modules to be physically, electrically, and communicably linked to form a two-way distribution, charging, and vending system having any number of charging modules. Such modular construction is advantageous to accommodate an increasing number of users in a minimally disruptive manner (i.e., two-way distribution, charging, and vending systems are not replaced, but are instead expanded to accommodate subscriber growth).

The charging module incorporates a displaceable housing door. Springs or other biasing members bias the displaceable housing door toward the entrance of the charging module. The displaceable housing door incorporates or seats against a weatherproof seal that limits or prevents the ingress of

rainwater, dust, and dirt into the charging module. The act of inserting the portable electrical energy storage device displaces the housing door along a longitudinal axis of the charging module. An aperture on the housing door permits a locking hub in the base of the charging module to pass through the displaceable door and engage a complementary cavity on the portable electrical energy storage device, securing the portable electrical energy storage device in the charging module. The aperture also permits the passage of a number of electrical contacts to engage a complementary number of electrical contacts on the portable electrical energy storage device, thereby permitting the flow of current from the two-way distribution, charging, and vending system to the portable electrical energy storage device.

Upon insertion of a portable electrical energy storage device in a charging module, the two-way distribution system controller performs various diagnostic tests to confirm the utility and safety of the portable electrical energy storage device. For example, the two-way distribution, charging, and vending system may determine whether the recently received portable electrical energy storage device is able to hold an acceptable charge level. If the two-way distribution system controller determines an inserted portable electrical energy storage device is unsuitable for continued use, the two-way distribution system controller may lock the portable electrical energy storage device into the charging module.

The two-way distribution system controller may optionally communicate one or more messages via a wired (e.g., plain old telephone service or POTS) or wireless (e.g., GSM or CDMA cellular communication or IEEE 802.11 WiFi) communications interface to a back-end system. The two-way distribution system controller may also provide environmental control (e.g., cooling, heating, dehumidification) within individual charging modules and/or within individual portable electrical energy storage devices inserted into charging modules to ensure the portable electrical energy storage devices are maintained at an optimal temperature during the charging process.

A charging module to charge portable electric energy storage devices may be summarized as including a housing dimensioned to accommodate the at least partial insertion of a portable energy storage device along a longitudinal axis of the housing into an interior space formed by a peripheral housing wall joined to a base; a number of electric contacts projecting from the base at least partially into the interior space of the housing; a displaceable, (e.g., a rotatably displaceable), locking mechanism projecting from the base at least partially into the interior space of the housing; an entrance joined to the peripheral housing wall opposite the base, the entrance including an orifice connecting the interior space of the housing to an exterior space about the housing, the perimeter of the orifice closely corresponding to at least one physical aspect of the portable energy storage device casing; a housing door operably coupled to and positioned in the interior of the housing, the housing door axially displaceable along the longitudinal axis of the housing from a first position perpendicular to the housing wall and proximate the orifice to at least a second position perpendicular to the housing wall and proximate the base of the housing; an aperture concentric with the longitudinal axis of the housing through the housing door, the aperture to accommodate the passage of at least a portion of the locking mechanism and at least a portion of the number of electric contacts when the housing door is displaced to the second position; and at least one biasing element operably coupling the door to the base, the at least one biasing element biasing the housing door towards the first position.

The charging module may further include a displaceable cover disposed proximate the aperture and displaceable from a closed position in which the aperture is occluded, to an open position in which the aperture is unobstructed, the cover operably coupled to the housing door and to the housing such that as the housing door is displaced from the first position to the second position, the cover is displaced from the closed position to the open position.

The charging module may further include an actuator coupled to the locking mechanism, the actuator causing a displacement of the locking mechanism responsive to a receipt of the portable energy storage device casing in the interior space of the housing.

The charging module may further include a modular electrical interface electrically conductively coupled to the number of electric contacts projecting from the base of the housing into the interior space of the housing. Each of the number of electric contacts may be positioned concentric to the longitudinal axis of the housing and electrically isolated from any other of the number of electric contacts. Each of the number of electric contacts may include a circularly annular electric contact positioned concentric to the longitudinal axis of the housing and electrically isolated from any other of the number of electric contacts. Each of the number of electric contacts may include at least one of: a polygonally annular electric contact or a rounded polygonally annular electric contact, each electric contact positioned concentric to the longitudinal axis of the housing and electrically isolated from any other of the number of electric contacts. The number of electric contacts may form an electrically continuous circuit with a corresponding number of externally accessible electric contacts on the portable electric energy storage device casing when a portable electric energy storage device is inserted in the housing. The number of electric contacts may form an electrically continuous circuit with a corresponding number of electric contacts on an exterior surface of the portable energy storage device casing independent of the rotation of the portable energy storage device casing about the longitudinal axis of the housing. The locking mechanism may be positioned radially concentric to the number of electric contacts and is electrically isolated from the number of electric contacts. The displaceable cover may include a rotatably displaceable cover; and the rotatably displaceable cover may rotates from the closed position to the open position as the housing door is displaced from the first position to the second position. The displaceable cover may include a slideably displaceable cover; and the slideably displaceable cover may slides from the closed position to the open position as the housing door is displaced from the first position to the second position. A central region of the housing door may include a depression symmetric about two orthogonal transverse axes, the two orthogonal transverse axes mutually orthogonal to the longitudinal axis of the housing, the depression corresponding to a projecting portion of the portable energy storage device casing.

The charging module may further include a portable electrical energy storage device thermal control system that includes: at least one input channel communicably coupled to at least one two-way distribution system controller, the at least one input channel to receive an input signal from a portable electrical energy storage device inserted in the respective housing, the input signal including digital data representative of an internal temperature of the portable electrical energy storage device inserted in the respective

charging module; at least one output channel communicably coupled to the at least one two-way distribution system controller, the at least one output channel to provide an output signal to at least one of a temperature control subsystem or a temperature control device to maintain the internal temperature of the portable electrical energy storage device inserted in the respective charging module in a defined range at least while charging the portable electrical energy storage device.

A method of operating a portable electrical energy storage device charging and two-way distribution system may be summarized as including accepting the insertion of a first portable electrical energy storage device into a first of a number of charging modules, each of the number of charging modules bidirectionally communicably coupled to at least one two-way distribution system controller; reading data from one or more non-transitory storage media carried by the first portable electrical energy storage device via a communications interface communicably coupled to the at least one two-way distribution system controller; authenticating a first portion of the data read from the one or more non-transitory storage media carried by the portable electrical energy storage device, using the at least one two-way distribution system controller; validating a second portion of the data read from the one or more non-transitory storage media carried by the portable electrical energy storage device, using the at least one two-way distribution system controller; and responsive to successfully authenticating the first portion of the data and responsive to successfully validating the second portion of the data: writing the second portion of data read from the one or more non-transitory storage media carried by the first portable electrical energy storage device to one or more non-transitory storage media carried by a second portable electrical energy storage device inserted in a second of the number of charging modules, by the at least one two-way distribution system controller; and allowing the removal of the second portable electrical energy storage device from a second of the number of charging modules. Accepting the insertion of a first portable electrical energy storage device into a first of a number of charging modules may include accepting the at least partial insertion of the first portable electrical energy storage device into the first of the number of charging modules; locking the first portable electric energy storage device to the first of the number of charging modules by autonomously displacing a locking hub to a first (locked) position in which a portable electric energy storage device inserted into the first of the number of charging modules cannot be removed; and allowing the removal of the second portable electrical energy storage device from a second of the number of charging modules may include unlocking the second portable electric energy storage device from the second of the number of charging modules by autonomously displacing a locking hub to a second (unlocked) position in which a portable electric energy storage device can be removed from the second of the number of charging modules. Autonomously displacing the locking hub to a first (locked) position may include rotatably displacing the locking hub in the first of the number of charging modules from the first (locked) position as the first portable electrical energy storage device is inserted into the first of the number of charging modules; and autonomously rotatably returning the locking hub to the first (locked) position via one or more biasing members after the first portable electrical energy storage device is inserted into the first of the number of charging modules. Autonomously displacing the locking hub to a second (unlocked) position may include autonomously displacing an actuator from a first position to a second position, the displacement of the actuator from the first position to the second position sufficient to cause a corresponding displacement of the operably coupled locking hub in the second of the number of charging modules from the first (locked) position to the second (unlocked) position. Allowing the insertion of a first portable electrical energy storage device into a first of a number of charging modules may include accepting the at least partial insertion of the first portable electrical energy storage device into the first of the number of charging modules such that a perimeter of the first of the number of charging modules accommodates a perimeter of a casing disposed about the first portable electrical energy storage device regardless of an orientation of the casing about a longitudinal axis of the casing when the longitudinal axis of the casing and a longitudinal axis of the charging module are collinear.

The method may further include reading data indicative of one or more operational aspects of an external device powered by the first portable electrical energy storage device from the one or more non-transitory storage media carried by the first portable electrical energy storage device via the communications interface communicably coupled to the at least one two-way distribution system controller; generating data representative of a display output for presentation on one or more output devices communicably coupled to the at least one two-way distribution system controller; and erasing the data indicative of one or more operational aspects of the external device powered by the first portable electrical energy storage device from the one or more non-transitory storage media carried by the first portable electrical energy storage device via the communications interface communicably coupled to the at least one two-way distribution system controller. Validating a second portion of the data read from the one or more non-transitory storage media carried by the portable electrical energy storage device may include communicating the second portion of the data read from the one or more non-transitory storage media carried by the portable electrical energy storage device to one or more back-end systems, by the at least one two-way distribution controller; confirming the validity of the second portion of the data read from the one or more non-transitory storage media carried by the portable electrical energy storage device by the at least one back-end system; and responsive to successfully validating the second portion of the data read from the one or more non-transitory storage media carried by the portable electrical energy storage device by the back-end system, communicating a message indicative of a successful validation to the at least one two-way distribution controller. Confirming the validity of the second portion of the data read from the one or more non-transitory storage media carried by the portable electrical energy storage device by the at least one back-end system may include confirming at least a subscription plan logically associated with subscriber identification data included in the second portion of the data read from the one or more non-transitory storage media carried by the portable electrical energy storage device. Accepting the insertion of a first portable electrical energy storage device into a first of a number of charging modules may include accepting the at least partial insertion of the first portable electrical energy storage device into the first of the number of charging modules; and allowing the removal of the second portable electrical energy storage device from a second of the number of charging modules may include locking the first portable electric energy storage device to the first of the number of charging modules by autonomously displacing a locking hub

to a first (locked) position in which a portable electric energy storage device inserted into the first of the number of charging modules cannot be removed; and unlocking the second portable electric energy storage device from the second of the number of charging modules by autonomously displacing a locking hub to a second (unlocked) position in which a portable electric energy storage device can be removed from the second of the number of charging modules. Accepting the at least partial insertion of the first portable electrical energy storage device into the first of the number of charging modules may include autonomously displacing an actuator from a first position to a second position sufficient to cause the displacement of the operably coupled locking hub in the first of the number of charging modules from the first (locked) position to the second (unlocked) position, and autonomously maintaining the actuator in the second position to maintain the locking hub in the second (unlocked) position; and preventing the removal of the first portable electrical energy storage device from the first of the number of charging modules by engaging a locking hub in the first of the number of charging modules including autonomously displacing the actuator from the second position to the first position sufficient to cause the displacement of the operably coupled locking hub in the first of the number of charging modules from the second (locked) position to the first (unlocked) position, and autonomously maintaining the actuator in the first position thereby preventing the removal of the first portable electrical energy storage device from the first of the number of charging modules. Autonomously displacing the actuator from the second position to the first position may include de-energizing the actuator and permitting at least one biasing device to return the locking hub in the first of the number of charging modules from the second (unlocked) position to the first (locked) position.

The method may further include receiving, by the at least one two-way distribution controller, at least one output signal provided by at least one biometric sensor; and selecting by the at least one two-way distribution controller, the second portable electrical energy storage device based at least in part on data included in the at least one output signal provided by the at least one biometric sensor.

The method may further include responsive to unsuccessfully authenticating the first portion of the data or responsive to unsuccessfully validating the second portion of the data: displacing an actuator operably coupled to the locking hub in the first of the number of charging modules from a first position to a second position sufficient to displace the locking hub in the first of the number of charging modules from the first (locked) position to a second (unlocked) position thereby permitting the removal of the first portable electrical energy storage device from the first of the number of charging modules; and maintaining an actuator operably coupled to the locking hub in the second of the number of charging modules in a first position sufficient to maintain the locking hub in the second of the number of charging modules in the first (locked) position thereby preventing the removal of the second portable electrical energy storage device from the second of the number of charging modules.

A portable electrical energy storage device charging and two-way distribution system may be summarized as including a housing that includes a power distribution grid and a number of buckets, each of the buckets capable of accommodating the reversible, selective insertion of a portable energy storage device charging module and a power converter module electrically conductively coupled to the power distribution grid and to the portable energy storage device charging module; a first communications interface wirelessly communicably coupleable to at least some of a number of portable energy storage devices inserted into each of the number of buckets and wirelessly communicably coupleable to one or more wireless credentials carried by a system user; a second communications interface communicably coupleable to at least one back-end system; at least one non-transitory, processor-readable, storage media that stores processor-executable instructions; and at least one two-way distribution system controller communicably coupled to the at least one non-transitory, processor-readable storage media, the at least one two-way distribution system controller to execute the processor-executable instructions and in response: receive, via the first communications interface, data indicative of a subscriber identifier that uniquely identifies a subscriber; transmit, via the second communications interface, the received data indicative of the subscriber identifier to the back-end system; responsive to the insertion of a number of portable energy storage devices into a respective number of unoccupied portable energy storage device charging modules, locks the inserted portable energy storage devices into the respective portable energy storage device charging modules; and responsive to the receipt of data indicative of an authorization from the back-end system unlocks an authorized number of charged portable energy storage devices from a respective number of occupied portable energy storage device charging modules. The first communications interface bidirectionally may transfer data with a communications interface carried by a portable energy storage device powered vehicle proximate the portable electric storage device charging system. The first communications interface bidirectionally may transfer vehicle specific data with a communications interface carried by a portable energy storage device powered vehicle proximate the portable electric storage device charging system. The vehicle specific data may include at least one of: vehicle specific maintenance data or vehicle specific service data. The first communications interface bidirectionally may transfer data with a communications interface carried by a portable energy storage device.

The portable electrical energy storage device charging and two-way distribution system may further include at least one biometric sensor communicably coupled to the at least one two-way distribution system controller.

The at least one two-way distribution system controller may execute the processor-executable instructions and further may receive data indicative of at least one subscriber biometric property from the at least one biometric sensor; and responsive to the receipt of the data indicative of at least one subscriber biometric property, may selectively unlock an authorized number of charged portable energy storage devices from a respective number of occupied portable energy storage device charging modules.

Each portable energy storage device charging module may include a housing dimensioned to accommodate the at least partial insertion of a portable energy storage device casing along a longitudinal axis of the housing into an interior space formed by a peripheral housing wall joined to a base; a number of electric contacts projecting from the base at least partially into the interior space of the housing; a locking mechanism projecting from the base at least partially into the interior space of the housing; an entrance joined to the peripheral housing wall opposite the base, the entrance including an orifice connecting the interior space of the housing to an exterior space about the housing, the perimeter of the orifice closely corresponding to at least one physical aspect of the portable energy storage device casing;

a housing door operably coupled to and positioned in the interior of the housing, the housing door continuously axially displaceable along at least a portion of the longitudinal axis of the housing from a first position perpendicular to the housing wall and proximate the orifice to at least second position perpendicular to the housing wall and proximate the base of the housing; an aperture concentric with the longitudinal axis of the housing through the housing door, the aperture to accommodate the passage of at least a portion of the locking mechanism and at least a portion of the number of electric contacts when the housing door is displaced to the second position; at least one biasing element operably coupling the door to the base, the at least one biasing element biasing the housing door towards the first position; and a displaceable cover disposed proximate the aperture and displaceable from a closed position in which the aperture is occluded, to an open position in which the aperture is unobstructed, the cover operably coupled to the housing door and to the housing such that as the housing door is displaced from the first position to the second position, the cover is displaced from the closed position to the open position. Each of the buckets may accommodate the reversibly slideable physical insertion and removal of a charging module. Each of the buckets may accommodate the reversibly slideable physical insertion and removal of a power converter module and the reversibly slideable electrical conductive coupling of the power converter module to a power distribution grid and to the respective charging module inserted in the bucket.

The portable electrical energy storage device charging and two-way distribution system may further include at least one portable electric energy storage device temperature sensor disposed in each of the charging modules; wherein the processor-executable instructions further cause the at least one processor to maintain a temperature of the portable electric energy storage device received by the charging module within a defined temperature range while charging the respective portable electric energy storage device.

A method of operating a portable electric energy storage device two-way distribution, charging, and vending apparatus may be summarized as including receiving a first portable electric energy storage device in a first of a number of charging modules communicably coupled to at least one two-way distribution system controller; responsive to receiving the first portable electric energy storage device in the first of the number of charging modules, determining a condition of the first portable electric energy storage device by the at least one two-way distribution system controller; responsive to determining the condition of the first portable electric energy storage device is acceptable for charging, initiating charging of the first portable electric energy storage device; and contemporaneous with charging the first portable electric energy storage device, maintaining thermal conditions within the first portable electric energy storage device in a defined temperature range.

The method may further include positioning an actuator operably coupled to a locking hub in the first charging module in a first position sufficient to position the locking hub in the first charging module in a first (locked) position thereby preventing the removal of the first portable electric energy storage device from the first of the number of charging modules.

The method may further include responsive to receiving the first portable electric energy storage device in the first of the number of charging modules, reading by the at least one two-way distribution system controller data from a nontransitory storage media carried by the first portable electric energy storage device. Reading by the at least one two-way distribution system controller data from a nontransitory storage media carried by the first portable electric energy storage device may include reading by the at least one two-way distribution system controller, data from a first, immutable, portion of the nontransitory storage media carried by the first portable electric energy storage device, the data in the first, immutable, portion of the nontransitory storage media including data indicative of a manufacturer specific code.

Reading by the at least one two-way distribution system controller data from a nontransitory storage media carried by the first portable electric energy storage device may include reading by the at least one two-way distribution system controller, data from a second, rewriteable, portion of the nontransitory storage media carried by the first portable electric energy storage device, the data in the second, rewriteable, portion of the nontransitory storage media including data indicative of at least one subscriber identifier.

## BRIEF DESCRIPTION OF THE SEVERAL VIEWS OF THE DRAWINGS

In the drawings, identical reference numbers identify similar elements or acts. The sizes and relative positions of elements in the drawings are not necessarily drawn to scale. For example, the shapes of various elements and angles are not drawn to scale, and some of these elements are arbitrarily enlarged and positioned to improve drawing legibility. Further, the particular shapes of the elements as drawn, are not intended to convey any information regarding the actual shape of the particular elements, and have been solely selected for ease of recognition in the drawings.

FIG. **1** is a schematic diagram showing an environment in which a number of vehicles powered by portable electric energy storage devices exchange discharged devices for charged devices at a number of two-way distribution and vending systems, according to one illustrated embodiment.

FIG. **2**A is a perspective view showing an exterior of an example two-way distribution, charging and vending system having four (4) charging modules, according to one non-limiting illustrated embodiment.

FIG. **2**B is a perspective view showing an interior of the example two-way distribution, charging and vending system in FIG. **2**A, with the front cover opened exposing three (3) charging module buckets containing charging modules and one (1) empty charging module bucket, according to one non-limiting illustrated embodiment.

FIG. **2**C is a perspective view of the example two-way distribution, charging and vending system in FIG. **2**A, with the front cover opened exposing a number of charging modules, in which one of the charging modules contains a portable electric energy storage device, according to one non-limiting illustrated embodiment.

FIG. **2**D is a plan view of the bottom surface of an example portable electric energy storage device that includes a number of locking slots and a number of electrical charging contacts, according to one non-limiting illustrated embodiment.

FIG. **2**E is a perspective view of an illustrative charging module locking hub that includes a number of locking members adapted to engage a corresponding number of complementary locking slots on the portable electric energy storage device and a number of electrical charging contacts adapted to conductively couple to a corresponding number of complementary electrical charging contacts on the por-

table electric energy storage device depicted in FIG. **2**D, according to one non-limiting illustrated embodiment.

FIG. **2**F is a perspective view of an illustrative power converter module insertable into the two-way distribution, charging and vending system in FIG. **2**A used to convert power received from a power grid and/or renewable energy source to direct current useful for charging a portable electric energy storage device, according to one illustrated embodiment.

FIG. **3**A is a perspective view of an example charging module, according to one non-limiting illustrated embodiment.

FIG. **3**B is a plan view of a top of an example charging module that shows the housing door and aperture centered on the housing door, according to one non-limiting illustrated embodiment.

FIG. **3**C is a cross-sectional view along section line **3**C showing the physical and spatial relationship between the displaceable housing door, the locking hub, and the number of electrical contacts, according to one non-limiting illustrated embodiment.

FIG. **3**D is a cross-sectional view along section line **3**D showing the relationship between the displaceable housing door, the locking hub, the number of electrical contacts, and an example aperture cover, according to one non-limiting illustrated embodiment.

FIG. **3**E is a plan view of a bottom of an example charging module that shows various communication and power connectors, the locking hub and the actuator for the locking hub, according to one non-limiting illustrated embodiment.

FIG. **4** is a high-level logic flow diagram of an illustrative method of operating a two-way distribution, charging, and vending system for providing portable electric energy storage devices, according to one non-limiting illustrated embodiment.

FIG. **5** is a high-level logic flow diagram of an illustrative method of managing a two-way distribution of portable electric energy storage devices from a two-way distribution, charging, and vending system, according to one non-limiting illustrated embodiment.

FIG. **6** is a high-level logic flow diagram of an illustrative method of displaying vehicle specific information retrieved from a nontransitory storage media carried by a portable electric energy storage device that is used in an exchange process at a two-way distribution, charging, and vending system, according to one non-limiting illustrated embodiment.

FIG. **7** is a high-level logic flow diagram of an illustrative method of validating a subscriber identifier using one or more back-end systems communicably coupled to the two-way distribution, charging, and vending system, according to one non-limiting illustrated embodiment.

FIG. **8** is a high-level logic flow diagram of an illustrative method of charging a first portable electric energy storage device received by a two-way distribution, charging, and vending system, according to one non-limiting illustrated embodiment.

## DETAILED DESCRIPTION

In the following description, certain specific details are set forth in order to provide a thorough understanding of various disclosed embodiments. However, one skilled in the relevant art will recognize that embodiments may be practiced without one or more of these specific details, or with other methods, components, materials, etc. In other instances, well-known structures associated with controllers and/or microprocessors and associated programming, logic, and/or instruction sets; AC/DC power converters; buck and boost transformers; thermal control systems; portable electric energy storage devices (e.g., secondary batteries); networks and network communication protocols; wireless communications protocols; have not been shown or described in detail to avoid unnecessarily obscuring descriptions of the embodiments.

As used herein, "operational aspects" or a reference to one or more "operational aspects" of a vehicle includes the performance or function of any combination or number of systems or devices forming all or a portion of the indicated system. For example, the operational aspects of a vehicular system may include, but are not limited to one or more of: the vehicle cooling system; vehicle fuel system, vehicle steering or directional control system, vehicle suspension, vehicle electrical and ignition system, vehicle drivetrain and power transmission system, vehicle powertrain or motor, vehicle exhaust or emissions, or vehicle braking. An event impacting one or more operational aspects of a vehicle may impact the performance or functionality of one or more of the listed systems. In a similar manner, operational aspects of a vehicle electrical system may include, but are not limited to the performance or function of one or more components normally included in a vehicle electrical system, such as battery discharge rate, ignition, timing, electrical lamps, electrical systems, electrical instrumentation and the like. Thus, an event impacting one or more aspects of a vehicle electrical system may impact the performance or function of one or more electrical system components (e.g., limiting the discharge rate of a battery to limit vehicle speed, preventing the ignition system from starting the vehicle, etc.).

Unless the context requires otherwise, throughout the specification and claims which follow, the word "comprise" and variations thereof, such as, "comprises" and "comprising" are to be construed in an open, inclusive sense that is as "including, but not limited to."

Reference throughout this specification to "one embodiment" or "an embodiment" means that a particular feature, structure or characteristic described in connection with the embodiment is included in at least one embodiment. Thus, the appearances of the phrases "in one embodiment" or "in an embodiment" in various places throughout this specification are not necessarily all referring to the same embodiment.

The use of ordinals such as first, second and third does not necessarily imply a ranked sense of order, but rather may only distinguish between multiple instances of an act or structure.

Reference to portable electrical power storage device means any device capable of storing electrical power and releasing stored electrical power including but not limited to batteries, supercapacitors or ultracapacitors. Reference to batteries means chemical storage cell or cells, for instance rechargeable or secondary battery cells including but not limited to nickel cadmium alloy or lithium ion battery cells.

The headings and Abstract of the Disclosure provided herein are for convenience only and do not interpret the scope or meaning of the embodiments.

FIG. **1** shows a schematic diagram of an illustrative portable electric energy storage device distribution system **100** in which a number of two-way distribution, charging, and vending systems **110***a*-**110***n* (collectively "two-way distribution, charging, and vending systems **110**"). Each of the two-way distribution, charging, and vending systems **110** are capable of receiving, charging, and dispensing portable

electric energy storage devices **120***a*-**120***n* (collectively "portable electric energy storage device **120**") from subscribers **130***a*-**130***n* (collectively "subscribers **130**"), according to one illustrated embodiment. Each of the two-way distribution, charging, and vending systems **110** include any number of charging modules **112***a*-**112***n* (collectively "charging modules **112**"). Additionally, each of the two-way distribution, charging, and vending systems **110** includes at least one two-way distribution system controller **114**. The two-way distribution, charging, and vending systems **110** may optionally include one or more user interfaces **116** that are communicably coupled to the at least one two-way distribution system controller **114**. In some implementations, one or more networks **150** communicably couple some or all of the two-way distribution system controllers **114** to one or more back-end systems **160**. The one or more networks **150** may include, but are not limited to, one or more local area networks (LANs); one or more wide area networks (WANs); one or more worldwide network (e.g., the Internet) or combinations thereof.

Vehicles **140***a*-**140***n* (collectively "vehicles **140**") may use one or more portable electric energy storage devices **120** to provide motive power, for example through the use of an electric traction motor. Each of the vehicles **140** is associated with at least one particular subscriber **130** that may include a single individual, multiple individuals, a business or corporation, or a government entity. Based on a subscription plan selected by the subscriber **130**, each subscriber **130** is allocated a particular number of portable electric energy storage devices **120** and/or a particular type of portable electric energy storage devices **120** (e.g., standard output, high output, low capacity/short range, high capacity/long range, and the like). A subscriber **130** exchanges a portable electric energy storage device **120** at a two-way distribution, charging, and vending system **110** by inserting an at least partially discharged portable electric energy storage device **120** into a first charging module **112***a* and removing an at least partially charged portable electric energy storage device **120** from a second charging module **112***b*. The two-way distribution, charging, and vending system **110** allocates the at least partially charged portable electric energy storage devices **120** to a subscriber **130** based at least in part on the subscription plan selected by the respective subscriber **130**.

Each portable electric energy storage device **120** carries a nontransitory storage media **122**. At times, manufacturer specific data associated with the portable electric energy storage device **120** may be retained within a first portion of the nontransitory storage media **122** carried by each of the portable electric energy storage devices **120**. In some instances, the first portion of the nontransitory storage media **122** may be immutable or otherwise non-rewriteable. In some instances, the manufacturer specific data may be encoded, encrypted, or otherwise rendered unreadable or unintelligible. At times, subscriber identification data associated with the portable electric energy storage device **120** may be retained within a second portion of the nontransitory storage media **122** carried by each of the portable electric energy storage devices **120**. In some instances, the second portion of the nontransitory storage media **122** may be rewriteable, for example by the two-way distribution, charging, and vending system **110**.

The two-way distribution, charging, and vending system **110** advantageously provides a subscriber **130** with the ability to obtain charged portable electric energy storage devices **120** on an as-needed or on-demand basis, contingent upon the subscription plan selected by and logically associated with the respective subscriber **130**. The charging modules **112***a*-**112***n* are each capable of accepting the insertion of a single portable electric energy storage device **120**. Once inserted into the charging module **112**, the portable electric energy storage device **120** is locked into or otherwise securely retained in the charging module **112** and charged under defined, controlled, conditions established and maintained by the two-way distribution system controller **114**. The two-way distribution system controller **114** may cause a display on the at least one user interface **116** of subscription information, subscription upgrade offers, other offers, diagnostic information regarding their exchanged portable electric energy storage device **120**, diagnostic information regarding the subscriber's vehicle **140**, or combinations thereof.

The two-way distribution system controller **114** may be communicably coupled via network **150** to one or more back-end systems **160**. The communicable coupling between the two-way distribution system controller **114** and the back-end system **160** may include a wired communicable coupling (e.g., via Ethernet, plain old telephone service, and the like) or wireless communicable coupling (e.g., via cellular connection such as GSM, CDMA, or via a wireless network connection such as IEEE 802.11, Internet, and the like) or combinations thereof. In some instances, the two-way distribution system controller **114** may have multiple communicable couplings (e.g., one connection via terrestrial wired POTS and a second via wireless cellular or satellite) with the back-end system **160** to provide redundant and/or failover communications capabilities.

In some implementations, the two-way distribution, charging, and vending system **110** may optionally include any number of input/output (I/O) devices. Such I/O devices communicate data read or otherwise obtained by the I/O device to the two-way distribution system controller **114**. For example, a cash or currency (i.e., bill, coin, and/or token) acceptor may be communicably coupled to the two-way distribution system controller **114** to permit the acceptance of cash payments (i.e., point-of-sale or subscription payments) at the two-way distribution, charging, and vending system **110**. In another example, a magnetic stripe reader may be communicably coupled to the two-way distribution system controller **114** to permit the acceptance of credit and/or debit card payments and also to permit the use of subscriber identification cards with the two-way distribution, charging, and vending system **110**. In another example, a near field communication (NFC) or other similar short-range wireless communications interface may be communicably coupled to the two-way distribution system controller **114**. Such short-range wireless communication interfaces permit the two-way distribution system controller **114** obtain data from subscriber identification tokens (e.g., key fobs, cards, medallions, or the like) and/or vehicle information (e.g., maintenance, service, and similar diagnostic information) from the subscriber's vehicle **140**.

The two-way distribution system controller **114** may provide operational or maintenance information to the back-end system **160** thereby permitting autonomous repair/replacement scheduling capabilities. For example, the two-way distribution system controller **114** may communicate data indicative of a faulty charging module, power converter, or portable electric energy storage device **120** to the back-end system **160**. In some implementations, the back-end system **160** may perform limited troubleshooting of identified malfunctioning two-way distribution, charging, and vending system **110** components. For example, the back-end system **160** may reboot or otherwise restart the

two-way distribution system controller **114** and/or one or more identified malfunctioning components. In another instance, the two-way distribution system controller **114** may communicate data representative of operating, maintenance, and/or fault conditions (e.g., in the form of fault codes, QR codes, temperatures, operational currents, operational voltages, and the like) to the back-end system **160** thereby permitting the timely dispatch of repair personnel to the two-way distribution system **110**. In some implementations, the back-end system **160** may selectively disable malfunctioning two-way distribution system components in order to preserve other functional components in a stable operating state. For example, the two-way distribution system controller **114** and/or back-end system **160** may disconnect a charging module **112***a* suffering a high current fault condition from the power distribution network within the two-way distribution, charging, and vending system **110** to permit the operation of other function charging modules **112***b*-**112***n*.

In some instances, the back-end system **160** may retain data indicative of the subscription plan associated with each respective one of the subscribers **130***a*-**130***n*. In such instances, the two-way distribution system controller **114** reads the subscriber identification data associated with the portable electric energy storage device **120** from the second portion of the nontransitory storage media **122** carried by each of the portable electric energy storage devices **120** and communicates at least some of the read data to the back-end system **160**. The back-end system **160** validates or otherwise confirms the subscriber identification data provided by the two-way distribution system controller **114**. The back-end system **160**, communicates data indicative of a successful or unsuccessful validation of the subscriber identification information to the two-way distribution system controller **114**. Responsive to receipt of data indicative of a successful validation, the two-way distribution system controller **114** may cause the two-way distribution, charging, and vending system **110** to discharge or otherwise dispense one or more portable electric energy storage devices **120** to the respective subscriber **130**.

At times, the back end system **160** may periodically publish or "push" data indicative of subscribers having accounts in good standing (e.g., current, prepaid, showing zero balance due) and/or data indicative of subscribers having accounts not in good standing (e.g., delinquent, unpaid, or showing a past-due balance) to the two-way distribution, charging, and vending system **110**. Such subscriber account data may be locally retained in each two-way distribution, charging, and vending system **110** in a respective non-transitory storage. At times, the back-end system **160** may maintain databases or data stores containing data indicative of subscriber account information in non-transitory storage that is remote from the two-way distribution, charging, and vending system **110**. Such subscriber account information may be intermittently, periodically, or continuously communicated by the back-end system **160** to some or all of the two-way distribution, charging, and vending systems **110**.

The portable electric energy storage devices **120** can include any current or future developed system, device, or combinations of systems and devices capable of storing or creating energy in the form of an electrical charge. Example portable electric energy storage devices **120** can include, but are not limited to, secondary (i.e., rechargeable) batteries having any current or future developed battery chemistry, ultra capacitors, supercapacitors, and the like. Illustrative portable electric energy storage devices **120** include, but are not limited to, lead/acid batteries, nickel/cadmium batteries, lithium ion batteries, and similar rechargeable battery types. Each portable electric energy storage device **120** is contained within a resilient casing, enclosure, or housing that includes a number of externally accessible electrical contacts for discharging and charging the respective portable electric energy storage device **120**. In some instances, one or more phase change materials may be integrated into the portable electric energy storage device **120** to provide thermal management capabilities.

Each portable electric energy storage device **120** may have a casing, enclosure, or housing with one or more ergonomic features to facilitate portage of the portable electric energy storage device **120**, and the insertion and removal of the portable electric energy storage device **120** from the two-way distribution, charging, and vending system **110**. For example, each portable electric energy storage device **120** may include a protrusion, knob, or handle to facilitate the insertion and removal of the portable electric energy storage device **120** from the vehicle **140** and/or the charging module **112** in the two-way distribution, charging, and vending system **110**. Each of the portable electric energy storage devices **120** may have the same or different electrical charge capacity. Each of the portable electric energy storage devices **120** may have the same or different electric energy discharge characteristics. One characteristic shared by each of the portable electric energy storage devices **120** is the retention of data indicative of the manufacturer specific identifier in the first portion of the nontransitory storage media **122** carried by each of the portable electric energy storage devices **120**.

In some implementations, upon receipt of a portable electric energy storage device **120** in one of a number of charging modules **112**, the two-way distribution system controller **114** authenticates the manufacturer identifier retained in the nontransitory storage media **122** carried by a portable electric energy storage device **120** prior to charging the portable electric energy storage device **120**. In some instances, the two-way distribution system controller **114** may provide a message via the user interface **116** upon a failure to authenticate the manufacturer identifier retained in the nontransitory storage media **122** of a portable electric energy storage device **120** received by a charging module **112**.

FIG. **2**A shows an exterior perspective view of an example two-way distribution, charging, and vending system **110** as depicted in FIG. **1**, according to one illustrated embodiment. The two-way distribution, charging, and vending system **110** depicted in FIG. **2**A is coupled to an expansion module **210** that provides a number of additional charging modules **112** (four (4) shown in FIG. **2**A, **112***e*-**112***h*, greater or lesser number possible) to the two-way distribution, charging, and vending system **110**. It should be understood that each two-way distribution, charging, and vending system **110** may include any number of charging modules **112** and that each two-way distribution, charging, and vending system **110** may have the same or different numbers of charging modules **112**.

Also visible in FIG. **2**A is the exterior housing **202** and the gaskets **204** that surround each of the charging modules **112** to provide a weatherproof seal between the housing **202** and the charging module **112**. The occupied charging modules **214** each contain a single portable electric energy storage device **120**.

At least a portion of the power consumed by the two-way distribution, charging, and vending system **110** for control, operation, and/or charging of portable electric energy stor-

age devices **120** may be provided via one or more connections **220** to a power supply such as a local power distribution grid. In some implementations, at least a portion of the power consumed by the two-way distribution, charging, and vending system **110** for control, operation, and/or charging of portable electric energy storage devices **120** may be alternatively or additionally provided via one or more renewable energy sources. For example, one or more solar cell arrays **230** may be electrically conductively coupled to the two-way distribution, charging, and vending system **110**.

In some instances, the two-way distribution, charging, and vending system **110** may include one or more biometric sensors **206**. Such biometric sensors **206** may include, but are not limited to, one or more: visible or infrared still or video cameras, proximity detectors, ultrasonic transducers, or any other sensors, systems, or combination of sensors and systems capable of detecting one or more biometric aspects of the subscriber **130** attendant at the two-way distribution, charging, and vending system **110**. Such biometric sensors **206** may provide various input signals to the at least one two-way distribution system controller **114**. Responsive to the receipt of the signals provided by the biometric sensor **206**, the at least one two-way distribution system controller **114** may select a particular charged portable electric energy storage device **120** for release to the subscriber **130** based at least in part on data provided by the biometric sensor signal. Thus, for example, the at least one two-way distribution system controller **114** may release a portable electric energy storage device **120** from the lower portion of the two-way distribution, charging, and vending system **110** if the detected height of the subscriber **130** falls below a defined height threshold value (e.g., less than 152 cm or about 5 feet).

FIGS. **2**B and **2**C show perspective views of the interior of an example two-way distribution, charging, and vending system **110** as depicted in FIGS. **1** and **2**A, with a portion of the exterior housing **202** pivotably displaced to expose the internal structure of the two-way distribution system **110**, according to one illustrated embodiment.

FIG. **2**B shows a perspective view of the interior of a two-way distribution, charging, and vending system **110** in which charging modules **112***a*-**112***c* are installed in respective "buckets" or partitions **230***a*-**230***c* within the two-way distribution system **110** and one "bucket" or partition **230***d* within the two-way distribution system **110** remains empty. In some implementations, the individual charging modules **112** are of a modular construction that facilitates the slideable insertion and removal of the charging module **112** from a bucket **230**. Such modular construction advantageously facilitates the removal and replacement of an entire charging module **112** without requiring the tedious and time consuming rewiring of power, control, and/or communications to the newly inserted charging module **112**. Such modular construction may facilitate the tool-less or tool-free insertion and removal of a charging module **112** from a bucket **230**. Each of the charging modules **112** includes a mechanical locking device (not visible in FIG. **2**B or **2**C) adapted to retain a portable electric energy storage device **120** in the charging module. The mechanical locking device also includes a number of electrical contacts or electrodes (also not visible in FIG. **2**B or **2**C) that correspond and conductively couple to a complementary number of externally accessible electrical contacts on the portable electric energy storage device **120**. These and other features that advantageously facilitate the replacement of the charging modules **112** will be discussed in detail in FIGS. **3**A-**3**E.

FIG. **2**C shows a perspective view of the interior of a two-way distribution, charging, and vending system **110** in which a portable electric energy storage device **120***b* has been received in one charging module **112***b* disposed in bucket **230***b* of the two-way distribution system **110**. A first charging module **112***a* disposed in bucket **230***a* is empty and has not yet received a portable electric energy storage device **120**. Also evident in FIG. **2**C is the exposed handle on the portable electric energy storage device **120***b* which permits a subscriber to insert and remove the portable electric energy storage device **120***b* from a charging module **112***b*.

FIG. **2**D shows a plan view of the bottom surface of an example portable electric energy storage device **120** showing an exemplary locking connector and electrical coupling assembly **240**. The locking connector and electrical coupling assembly **240** include a number of cavities **242***a*-**242***d* (four shown, greater or lesser numbers possible collectively "cavities **242**") that each receive a corresponding complementary locking member (see FIG. **2**E) when the portable electric energy storage device **120** is received by the charging module **112**.

The assembly **240** additionally includes a number of electrical contacts (two shown **244**, **246**, other numbers possible) located within recesses on the portable electric energy storage device **120**. The electrical contacts **244**, **246** are electrically isolated from the charging module **112** and from each other. Although positioned radially, the electrical contacts **244**, **246** may be positioned in any similar recess on the portable electric energy storage device **120**. Example recesses include recesses capable of having any concentric shape or configuration, for example concentric triangular recesses, square recesses, rounded square recesses, polygonal recesses, or rounded polygonal recesses.

FIG. **2**E is a perspective view of an exemplary complementary locking hub and electrical contact assembly **250** disposed in each of the charging modules **112**. The locking hub and electrical contact assembly **250** includes a rotatable locking hub **252** with a number of locking members **253***a*-**253***d* (four shown, greater or lesser numbers possible collectively "locking members **253**") that are each received in a corresponding one of the cavities **242***a*-**242***d* when the portable electric energy storage device **120** is received by the charging module **112**. By rotating the locking hub **252**, each of the locking members **253** engages an edge of a respective one of the recesses **242**, thereby preventing the removal of the portable electric energy storage device **120** from the charging module **112**. The locking hub and electrical contact assembly **250** also include a number of electrical contacts (two shown **254**, **256**, other numbers possible).

Generally, the electrical contacts **254**, **256** are disposed concentrically inward of the locking hub **252** along an axis normal to the center of the locking hub **252**. The electrical contacts **254**, **256** are electrically isolated from the charging module **112** and from each other. Although the electrical contacts **254**, **256** are shown as radially concentric circular objects in FIG. **2**E, the electrical contacts **254**, **256** can have any concentric shape or configuration, for example concentric triangles, squares, rounded squares, polygons, and/or rounded polygons. When the charging module **112** receives the portable electric energy storage device **120**, the electrical contacts **254**, **256** fit within the complementary apertures on the portable electric energy storage device **120** thereby providing an electrically continuous path between the power distribution grid in the two-way distribution, charging, and vending system **110** and the portable electric energy storage device **120**. Advantageously, the concentric placement of the locking hub **252** and the electrical contacts **254**, **256** permits

the insertion of the portable electric energy storage device **120** into the charging module **112** without requiring the subscriber to specifically orient the portable electric energy storage device **120**.

FIG. **2**F shows a modular power converter **260** electrically conductively coupleable to at least one charging module **112** used to provide direct current to a portable electric energy storage device **120** received by the charging module **112**, according to an illustrated embodiment. The modular power converter **260** includes one or more modular interfaces **262** (not visible in FIG. **2**F). The one or more modular interfaces **262** include one or more inputs to receive power from the power (e.g., alternating current or AC power) distribution grid within the two-way distribution system **110**. The one or more modular interfaces include one or more outputs to provide power (e.g., direct current or DC power) to an electrically conductively coupled charging module **112**. In addition, the modular power converter **260** may include one or more tethered or wireless communications interfaces to bidirectionally communicably couple to the one or more two-way distribution system controllers **114**.

The physical construction of the modular power converter **260** and the one or more modular interfaces **262** permit the slideable physical insertion and removal of the modular power converter **260** to and from the two-way distribution system **110**. Such construction advantageously permits the rapid field replacement of a failed modular power converter **260** without requiring the field repair of the failed modular power converter **260**. In some instances, the modular power converter **260** can include one or more ergonomic handles or other devices to facilitate the insertion and/or removal of the modular power converter **260** from the bucket **230**.

In some implementations, the two-way distribution system controller **114** monitors one or more aspects of the performance of each modular power converter **260** installed in the two-way distribution system **110**. In some implementations, in addition to monitoring the one or more performance aspects of each modular power converter **260**, the two-way distribution system controller **114** also controls one or more output aspects of the current supplied by the modular power converter **260** to the portable electric energy storage device **120**. For example, the two-way distribution system controller **114** may control the current flow to the portable electric energy storage device **120** to maintain the temperature of the portable electric energy storage device **120** within a defined range during charging. In another example, the two-way distribution system controller **114** may coordinate the power consumption of multiple modular power converters **260** by adjusting the output current provided by each of the modular power converters **260** based on the charge level of the electrically coupled portable electric energy storage device **120**. Thus, the two-way distribution system controller **114** may permit a higher current output from modular power converters **260** electrically coupled to portable electric energy storage devices **120** at a lower charge state and proportionately less current flow to those portable electric energy storage devices **120** as the charge level increases. In some instances, the two-way distribution system controller **114** may notify the back-end system **160** responsive to detecting a malfunction in one or more modular power converters **260**.

FIGS. **3**A-**3**E show an example charging module **112**, according to an illustrated embodiment. FIG. **3**A shows a perspective view of an example charging module **112**. FIG. **3**B shows a plan view of the top of the example charging module **112** in FIG. **3**A. FIG. **3**C shows a cross sectional elevation view of the example charging module **112** in FIG. **3**A along section line **3**C-**3**C in FIG. **3**B. FIG. **3**D shows a cross sectional elevation view of the example charging module **112** in FIG. **3**A along section line **3**D-**3**D in FIG. **3**B. FIG. **3**E shows a plan view of the base of the example charging module **112** in FIG. **3**A.

The charging module **112** includes a housing **302** that is disposed about a longitudinal axis **303** to form an internal space **306**. The charging module **112** further includes a base **304** that is generally normal to the longitudinal axis **303** and is physically attached to a first end of the housing **302**. The charging module **112** includes an entrance **310** that is generally normal to the longitudinal axis **303** and physically attached to the housing **302**. The entrance **310** includes an orifice **312** through which the interior space **306** defined by the housing **302** is accessed. A housing door **320** that is displaceable along the longitudinal axis **303** covers or otherwise obstructs at least a portion of the orifice **312**. An aperture **330** having any shape or configuration (e.g., diamond, square, circular, oval) centered on the longitudinal axis **303** penetrates the housing door **320**. One or more surface features **308** (e.g., detents, slots, grooves) may be formed on one or more external surfaces of the housing **302**. In various implementations, the one or more recesses, detents, slots or grooves **308** may align the charging module **112** with the bucket **230** in the two-way distribution, charging, and vending system **110** thereby facilitating the slideable insertion of the charging module **112** into the bucket **230**.

Referring now to FIG. **3**C, the housing door **320** is shown in two positions, a first position **320** proximate the entrance **310** and a second position **320'** proximate the base **304**. When the charging module **112** is inserted into a bucket **230** and the two-way distribution, charging, and vending system housing **202** is closed, the gasket **204** forms a weatherproof seal around the orifice **312**. In the absence of a portable electric energy storage device **120** in the charging module **112**, a number of biasing members **350** biases the housing door to the first position proximate the entrance **310**. When the housing door **320** is in the first position, a displaceable cover **360** obstructs the aperture **330**.

Visible in FIG. **3**C is the locking hub and electrical contact assembly **250**. The rotatable locking hub **252** extends at least partially into the internal space **306** and is centered along the longitudinal axis **303** of the housing **302**. The rotatable locking hub **252** is operably physically coupled to an actuator **340** via one or more linking members **342**. In some instances, the actuator **340** may be a maintained position type actuator that remains in the last position until a signal is received by the actuator **340** to move to a new position. In some instances, the actuator **340** may be spring loaded or otherwise biased to one position after the energy source is removed from the actuator **340**. In at least one embodiment, the actuator **340** is biased to a position in which the locking member **253** on the rotatable locking hub **252** engage the corresponding cavities **242** on a portable electric energy storage device **120** inserted into the internal space of the charging module **112**. In other instances, the actuator can linearly translate the locking hub **252** to engage corresponding cavities **242** on the portable electric energy storage device **120**. For example, the actuator **340** may cause a linear displacement of a bar-type locking hub member into a corresponding cavity **242** on the portable electric energy storage device **120**.

When inserted into the interior space **306** of the charging module **112**, a portable electric energy storage device **120** displaces the housing door **320** along the longitudinal axis **303** of the housing **302** using the force of insertion of the

portable electric energy storage device **120**. With reference to FIG. **3**D, in some instances the displaceable cover **360** may have one or more shaft members **362** that slide along a serpentine slot **352** formed in, along, or through at least one wall of the interior space **306**. As the housing door **320** is displaced along the longitudinal axis **303**, the shaft **362** travels along the serpentine slot **352**, moving the displaceable cover **360** away from and consequently opening the orifice **330**. The locking hub and electrical contact assembly **250** is thus permitted to at least partially pass through the orifice **330** when the housing door **320** is in the second position.

The passage of the locking hub and electrical contact assembly **250** through the orifice **330** when the housing door **320** is in the second position permits electrical contact between the electrical contacts **254**, **256** that provide power from the modular power converter **260** and the electrical contacts **244**, **246** positioned in the recesses **242** on the portable electric energy storage device **120**. Such permits the modular power converter **260** to provide energy to charge the portable electric energy storage device **120**. When the portable electric energy storage device **120** is removed from the charging module **112**, the biasing members **350** cause the displacement of the housing door **320** from the second position to the first position. As the housing door **320** travels from the second position to the first position along the longitudinal axis **303**, the shafts **362** coupled to the displaceable cover **360** travel along the serpentine slots **352**, moving the displaceable cover **360** towards and consequently obstructing the orifice **330** when the housing door **320** is in the first position.

Referring now to FIGS. **3**D and **3**E, a modular electrical interface **366** is disposed on the external portion of the base **304**. The modular electrical interface **366** facilitates the flow of power from the output of the modular power converter **260** to the electrical contacts **254**, **256**. In some instances, the modular electrical interface **366** further provides for the bidirectional flow of signals between the charging module **112** and the at least one two-way distribution system controller **114**. The modular electrical interface advantageously permits the slideable insertion and removal of the charging module **112** into the bucket **230** without requiring manual connection or coupling of power or signal wiring.

FIG. **4** shows a high-level flow diagram of an example method **400** of operating a two-way distribution, charging, and vending system **110** for providing portable electric energy storage devices **120**, according to one non-limiting illustrated embodiment. A manufacturer of vehicles **140** powered using portable electric energy storage devices **120** may also provide the portable electric energy storage devices **120**. The portable electric energy storage devices **120** may also be provided by a party that does not manufacture vehicles but distributes portable electric energy storage devices. For safety and operability reasons, the manufacturer may place tight manufacturing and quality controls on the portable electric energy storage devices **120** to optimize vehicle performance, maximize vehicle life, and/or enhance the safety of the vehicle operator. The manufacturer may elect to improve widespread public acceptance of the electric vehicles by providing two-way distribution, charging, and vending systems **110** at convenient locations throughout a geographic area (e.g., city, county, state, or nation). At these two-way distribution, charging, and vending systems **110**, vehicle operators who have subscribed to a portable electric energy storage device exchange program are able to exchange a discharged portable electric energy storage device **120** for a more fully charged portable electric energy storage device **120**. By supporting such an exchange, the manufacturer is able to ease public concerns of being stranded and without power in a remote location and thereby increase public acceptance of an ecologically friendly electric vehicle technology. The method **400** of operating a two-way distribution, charging, and vending system **110** for providing portable electric energy storage devices **120** commences at **402**.

At **404**, a first portable electric energy storage device **120***a* is at least partially received by a first charging module **112***a*. For example, a subscriber **130** may remove an at least partially discharged first portable electric energy storage device **120***a* from a vehicle **140**. The subscriber **130** inserts the at least partially discharged first portable electric energy storage device **120***a* into an empty first charging module **112***a* in the two-way distribution, charging, and vending system **110**.

At **406**, the at least one two-way distribution system controller **114** reads data from a nontransitory storage media **122***a* carried by the at least partially discharged first portable electric energy storage device **120***a*. In some instances, the at least one two-way distribution system controller **114** wirelessly reads the data from the nontransitory storage media **122***a*, for example using Near Field Communication, frequency identification (RFID), or Bluetooth®.

At **408**, the at least one two-way distribution system controller **114** authenticates a first portion of the data read from the nontransitory storage media **122***a* carried by the at least partially discharged first portable electric energy storage device **120***a* to confirm the portable electric energy storage device **120***a* is authorized by the vehicle manufacturer. In some instances, the first portion of the data may include data stored or otherwise retained in an immutable portion of the nontransitory storage media **122***a* carried by the portable electric energy storage device **120***a*. In some instances, the first portion of the data may include a manufacturer identifier that is encrypted, encoded, or otherwise protected.

In some instances, the at least one two-way distribution system controller **114** may locally authenticate the first portion of the data read from the nontransitory storage media **122***a* carried by the portable electric energy storage device **120***a*. For example, the at least one two-way distribution system controller **114** may compare all or a portion of the data read from the nontransitory storage media **122***a* with a known authentic code supplied by the manufacturer and stored in a nontransitory storage media readable by the at least one two-way distribution system controller **114**.

In other instances, the at least one two-way distribution system controller **114** may remotely authenticate the first portion of the data read from the nontransitory storage media **122***a* carried by the portable electric energy storage device **120***a*. For example, the at least one two-way distribution system controller **114** may communicate at least a portion of the first portion of the data, including the manufacturer identifier, to a back-end system **160**. The back-end system **160** can compare the first portion of the data read from the nontransitory storage media **122***a* with a known authentic manufacturer identifier supplied by the manufacturer and stored in a nontransitory storage media readable by the back-end system **160**. The back-end system **160** can then communicate a message to the at least one two-way distribution system controller **114** indicative of the outcome of the authentication of the manufacturer identifier read from the nontransitory storage media **122***a*.

At **410**, the at least one two-way distribution system controller **114** validates a second portion of the data read

from the nontransitory storage media **122***a* carried by the at least partially discharged first portable electric energy storage device **120***a* to confirm the validity of the subscription of the subscriber **130** returning the portable electric energy storage device **120***a*. In some instances, the second portion of the data may include data stored or otherwise retained in a rewriteable portion of the nontransitory storage media **122***a* carried by the portable electric energy storage device **120***a*. In some instances, the second portion of the data may uniquely identify a particular subscriber **130**.

In some instances, the at least one two-way distribution system controller **114** may locally validate subscriber identifier included in the second portion of the data read from the nontransitory storage media **122***a* carried by the portable electric energy storage device **120***a*. For example, the at least one two-way distribution system controller **114** may compare all or a portion of subscriber identifier read from the second portion of the nontransitory storage media **122***a* with entries in a database or data store indicative of all known valid subscriber identifiers. In some instances, the back-end system **160** may communicate all or a portion of the database or data store indicative of all known valid subscriber identifiers to the at least one two-way distribution system controller **114** periodically, intermittently, or from time-to-time. In some implementations, such a database or data store may include data indicative of a "whitelist" (i.e., a list of subscribers having accounts that are in good standing), a "blacklist" (i.e., a list of subscribers having accounts that are not in good standing), or any combination thereof.

In other instances, the at least one two-way distribution system controller **114** may remotely authenticate the subscriber identifier included in the second portion of data read from the nontransitory storage media **122***a*. For example, the at least one two-way distribution system controller **114** may communicate at least a portion of the subscriber identifier included in the second portion of the data to the back-end system **160**. The back-end system **160** can compare the subscriber identifier with entries in a database or data store indicative of all known valid subscriber identifiers. The back-end system **160** can then communicate a message to the at least one two-way distribution system controller **114** indicative of the outcome of the validation of the subscriber identifier included in the second portion of the data read from the nontransitory storage media **122***a*.

If the two-way distribution, charging, and vending system **110** determines the subscriber's account is not in good standing, a message may be displayed on the display **116**, a handheld device logically associated with the subscriber, or both. The message may require the subscriber **130** to bring their account to a "good standing" condition prior to dispensing a charged portable electric energy storage device **120**. In some instances, the subscriber **130** may provide an electronic payment (e.g., credit or debit card) using an input device (e.g., magnetic stripe reader) on the two-way distribution, charging, and vending system **110** or a portable wireless device such as a smartphone. In some instances, the subscriber **130** may authorize the back-end system **160** to debit or charge a previously supplied (i.e., an "on file") debit or credit card to bring the subscriber account to good standing by providing an input to the back-end system **160** via the kiosk or via a portable wireless device such as a smartphone.

Where the two-way distribution, charging, and vending system **110** locally validates subscriber account status, after successfully processing the payment the two-way distribution, charging, and vending system **110** may immediately update subscriber information in the nontransitory storage media to reflect the received payment and the updated account standing. Such updated subscriber account information may be pushed to or pulled by the back end system **160** either immediately or at one or more defined intervals. Where remote validation is used, the back-end system **160** may immediately update subscriber information upon successful completion of payment to reflect the subscriber's revised account standing and may push data indicative of the respective subscriber's account standing to the two-way distribution, charging, and vending system **110**. At times, the back-end system **160** and/or the two-way distribution, charging, and vending system **110** may provide messages to a subscriber **130** based on the account status of the respective subscriber **130**. For example, a subscriber **130** having an account that is not in good standing may be provided a message via the display device **116** that inquires whether the subscriber would like to change their payment method to an automatic payment method such as a periodic auto-debit payment collected via a deposit account or via a credit or debit card.

The two-way distribution, charging, and vending system **110** may communicate with a portable electric energy storage device **120** and/or the subscriber vehicle **140** prior to dispensing the portable electric energy storage device **120** to a subscriber **130**. Such communication may for example, include instructions executable at least in part by a security or other controller carried by the dispensed portable electric energy storage device **120**. Such communication may for example, include instructions executable at least in part by one or more controllers carried on or by the subscriber's vehicle **140**.

In one implementation, a subscriber **130** logically associated with a subscriber account that is not in good standing may arrive at a two-way distribution, charging, and vending system **110** with a depleted battery only to find that a charged portable electric energy storage device **120** is unavailable due at least in part to the subscriber's account status. Rather than stranding the subscriber **130**, in some implementations the at least one two-way distribution system controller **114** can communicate instructions to a charged portable electric energy storage device **120**. In some instances, the instructions provided by the at least one two-way distribution system controller **114** may limit the energy discharge rate of the dispensed portable electric energy storage device **120** to a defined value less than a maximum energy discharge rate achievable by the portable electric energy storage device **120**. Limiting the energy discharge rate of the portable electric energy storage device **120** effectively limits the speed of the subscriber's vehicle **140** until the subscriber **130** brings their account into good standing.

In another instance, the instructions provided by the at least one two-way distribution system controller **114** may limit or otherwise cap the energy available to the subscriber's vehicle **140**. For example, the instructions may limit the energy available from the portable electric energy storage device **120** to a defined percentage of the total energy stored (i.e., the charge) in the portable electric energy storage device **120**. For example, a portable electric energy storage device **120** having a stored energy level of 1 kilowatt-hour (kWh) may be limited to 50% availability (i.e., 500 watt-hours) when dispensed to a subscriber associated with a subscriber account that is not in good standing. Portable electric energy storage devices **120** having such energy availability limitations may cease delivering energy to the subscriber's vehicle **140** upon reaching the defined energy availability limit.

In another example, the energy availability cap or limit in a portable electric energy storage device **120** dispensed by the two-way distribution, charging, and vending system **110** may be based on one or more extrinsic factors. At times, the energy availability cap in the portable electric energy storage device **120** may be based in whole or in part on the distance between the two-way distribution, charging, and vending system **110** and a defined geographic point. For example, the two-way distribution, charging, and vending system **110** may dispense a portable electric energy storage device **120** having an energy availability cap sufficient for a subscriber **130** to reach a defined location (e.g., home, work) when the subscriber account logically associated with the respective subscriber **130** is not in good standing. At times, the at least one two-way distribution system controller **114** may additionally or alternatively communicate with a controller carried by the subscriber vehicle **140** when the subscriber account logically associated with a subscriber **130** is not in good standing. At times, such communication may be performed wirelessly between the two-way distribution, charging, and vending system **110** and the subscriber vehicle **140**. At other times, such communication may be performed via one or more intermediary devices exchanged between the two-way distribution, charging, and vending system **110** and the subscriber vehicle **140**, for example via the nontransitory storage media **122** carried by a portable electric energy storage device **120** discharged by the two-way distribution, charging, and vending system **110**. The communication between the at least one two-way distribution system controller **114** and the subscriber vehicle **140** may limit or alter the performance of one or more vehicular systems while the subscriber account logically associated with the subscriber **130** is not in good standing. In one implementation, such communication may cause one or more vehicular systems (e.g., lights, horn) to act erratically or spontaneously as a way of indicating the subscriber account logically associated with the subscriber **130** is not in good standing. Such altered vehicular systems may be maintained in an altered state for a defined period, for example until the subscriber account is brought into good standing.

Importantly, the authentication and validation processes are unrelated. The authentication at **408** ensures the portable electric energy storage device **120***a* is a manufacturer approved device by comparing a manufacturer identifier stored in the first portion of the nontransitory storage media **122***a* carried by the portable electric energy storage device **120***a*. The validation at **410** ensures the subscription logically associated with the subscriber identifier carried in the nontransitory storage media **122***a* of the inserted portable electric energy storage device **120***a* is valid. Additionally, the validation at **410** provides the two-way distribution, charging, and vending system **110** with guidance on the number, type, and performance of charged portable electric energy storage devices **120***b*-**120***n* to dispense to the subscriber based on the subscription logically associated with the subscriber identifier.

At **412**, responsive to a successful authentication at **408** and a successful validation at **410**, the two-way distribution, charging, and vending system **110** writes the second portion of data, including the subscriber identifier, read from the first portable electric energy storage device **120***a* to a nontransitory storage media **122***b* carried by a second, charged, portable electric energy storage device **120***b*. Recall, the manufacturer specific identifier is stored or retained in an immutable or non-rewriteable first portion of the nontransitory storage media **122***b* carried by the charged portable electric energy storage device **120***b*. Thus, after writing the subscriber identifier in the second portion of the nontransitory storage media **122***b*, the first portion of the nontransitory storage media **122***b* will include data indicative of the manufacturer identifier and the second portion of the nontransitory storage media **122***b* will include data indicative of the subscriber identifier.

At **414**, responsive to successfully authenticating the manufacturer identifier at **408** and validating the subscriber identifier at **410**, the at least one two-way distribution system controller **114** allows the removal of the charged portable electric energy storage device **120***b* from the two-way distribution, charging, and vending system **110**. The method **400** of operating a two-way distribution, charging, and vending system **110** for providing portable electric energy storage devices **120** commences at **402**.

FIG. **5** shows a high-level flow diagram of an example method **500** of operating a two-way distribution, charging, and vending system **110** for providing portable electric energy storage devices **120**, according to one non-limiting illustrated embodiment. The locking hub **252** locks the portable electric energy storage device **120** into the charging module **112**. In some instances, the locking hub **252** is biased towards a first (locked) position and the bias may be overcome by the insertion of the portable electric energy storage device **120** into the charging module **112**. In such instances, the portable electric energy storage device **120** is locked in the charging module **112** upon insertion. In other instances, the locking hub is biased towards a second (unlocked) position and thus may permit the removal of the portable electric energy storage device **120** from the charging module **112** until such time that the locking hub **252** is rotated to the first (locked) position. The method **500** of locking the at least partially discharged first portable electric energy storage device **120***a* into the first charging module **112***a* upon insertion and unlocking the charged second portable electric energy storage device **120***b* from a second charging module **112***b* upon successful authentication of the manufacturer identifier and validation of the subscriber identifier commences at **502**.

At **504**, the first of a number of charging modules **112***a* receives the first portable electric energy storage device **120**. As the first portable electric energy storage device **120** is inserted into the first charging module **112***a*, the locking hub **252** in the first charging module **112***a* engages the cavities **242** on the first portable electric energy storage device **120***a*, securely locking the first portable electric energy storage device **120** into the first charging module **112***a*.

In some instances, the locking hub **252** is biased toward the first (locked) position using one or more biasing members such as a helical coil spring or similar. In such instances, inserting the first portable electric energy storage device **120***a* causes a temporary rotational displacement of the locking hub **252** from the first position until the first portable electric energy storage device **120***a* is seated in the charging module **112** and the locking hub rotationally biases back to the first (locked) position.

In other instances, the actuator **340** causes the rotational displacement of the locking hub **252** from the first (locked) position to the second (unlocked) position until the first portable electric energy storage device **120***a* is seated in the first charging module **112***a*. After the first portable electric energy storage device **120***a* is seated in the first charging module **112***a*, the actuator can cause the rotational displacement of the locking hub **252** from the second (unlocked) position to the first (locked) position thereby securing the first portable electric energy storage device **120***a* in the first charging module **112***a*.

After securing the first portable electric energy storage device **120***a* in the first charging module **112***a*, the at least one two-way distribution system controller **114** authenticates the manufacturer identifier and validates the subscriber identifier stored or otherwise retained in the nontransitory storage media **122***a* carried by the first portable electric energy storage device **120***a*.

At **506**, responsive to the successful authentication of the manufacturer identifier and successful validation of the subscriber identifier stored or otherwise retained in the nontransitory storage media **122***a* carried by the first portable electric energy storage device **120***a*, the at least one two-way distribution system controller **114** writes the subscriber identifier to the nontransitory storage media **122***b* carried by a charged second portable electric energy storage device **120***b* in a second of the number of charging modules **112***b*. The at least one two-way distribution system controller **114** then causes the rotational displacement of the locking hub in the second charging module **112***b* from the first (locked) position to the second (unlocked) position thereby permitting the removal of the second portable electric energy storage device **120***b* from the second charging module **112***b*. The method **500** of locking the at least partially discharged first portable electric energy storage device **120***a* into the first charging module **112***a* upon insertion and unlocking the charged second portable electric energy storage device **120***b* from a second charging module **112***b* upon successful authentication of the manufacturer identifier and validation of the subscriber identifier concludes at **508**.

FIG. **6** shows a high-level flow diagram of an example method **600** of a two-way distribution, charging, and vending system **110** providing a subscriber **130** with vehicle specific information upon receipt of a portable electric energy storage device **120** from the subscriber **130**, according to one non-limiting illustrated embodiment. In some implementations, the nontransitory storage media **122** carried by a portable electric energy storage device **120** may store information in the form of data indicative of one or more operational aspects of the vehicle **140** in which the portable electric energy storage device **120** has been most recently used. Such data may include, but is not limited to maintenance information, service information, operational information, and similar. The vehicle specific information may be presented to the subscriber **130** via the user interface **116** in an audio, a video, or an audio/visual format. The method **600** of a two-way distribution, charging, and vending system **110** providing a subscriber **130** with vehicle specific information upon receipt of a portable electric energy storage device **120** from the subscriber **130** commences at **602**.

At **604**, in response to receiving the first discharged portable electric energy storage device **120***a* in the first of a number of charging modules **112***a*, the at least one two-way distribution system controller **114** reads data from the nontransitory storage media **122***a* carried by the portable electric energy storage device **120***a*. In some instances, in addition to the manufacturer identifier and the subscriber identifier, the nontransitory storage media **122***a* may contain vehicle specific information in the form of data indicative of one or more operational aspects of the subscriber's vehicle **140** from which the portable electric energy storage device **120***a* was most recently removed. Such vehicle specific information may include, but is not limited to information regarding current maintenance, service, repairs, or replacements due on the vehicle; vehicle recall information; future expected maintenance, service, repairs, or replacements due on the vehicle based on observed driving conditions and driving styles; and similar.

At **606**, in response to obtaining the vehicle specific information, the at least one two-way distribution system controller **114** generates an output perceptible by the subscriber **130**. Such an output may include information presented in an audio format, a video format, a still image format, and/or an audio/visual format. For example, the at least one two-way distribution system controller **114** may generate a video format display on the user interface **116** in response to vehicle data retrieved from the nontransitory storage media **122***a* carried by the portable electric energy storage device **120***a*.

At **608**, the at least one two-way distribution system controller **114** erases the vehicle specific data from the nontransitory storage media **122***a* carried by the portable electric energy storage device **120***a*. The method **600** of a two-way distribution, charging, and vending system **110** providing a subscriber **130** with vehicle specific information upon receipt of a portable electric energy storage device **120** from the subscriber **130** concludes at **610**.

FIG. **7** shows a high-level flow diagram of an example method of verifying a subscriber identifier read by the at least one two-way distribution system controller **114** from the second portion of the nontransitory storage media **122***a* carried by a first portable electric energy storage device **120***a*, according to one illustrated embodiment. Vehicle manufacturers may offer exchange portable electric energy storage devices **120** via subscription plans that may include one or multiple levels. For example, subscription plans may be in the form of a limited number of exchanges over a given timeframe (one exchange per day, five exchanges per week, thirty exchanges per month, etc.).

In another example, subscription plans may be in the form of a number of portable electric energy storage devices **120** made available to the subscriber at one time. Certain vehicles **140** may have the capability to use more than one portable electric energy storage device **120** at a time—in such instances, the subscriber will likely desire to exchange the portable electric energy storage devices in pairs rather than individually.

In another example, subscription plans may be in the form of vehicle performance (a "range" plan, a "performance" plan, etc.). In such instances, different portable electric energy storage devices **120** may have different discharge characteristics tailored to a particular subscription plan.

Thus, upon receipt of a portable electric energy storage device **120**, the at least one two-way distribution system controller **114** retrieves the subscriber identifier from the nontransitory storage media **122***a* carried by the portable electric energy storage device **120***a*. Using the retrieved subscriber identifier, the at least one two-way distribution system controller **114** can both validate the subscriber account (i.e., the account is current on payment) and confirm any special subscription services and/or subscription level. The method of verifying a subscriber identifier read by the at least one two-way distribution system controller **114** from the second portion of the nontransitory storage media **122***a* carried by a first portable electric energy storage device **120***a* commences at **702**.

At **704**, the at least one two-way distribution system controller **114** communicates the subscriber identifier read from the second portion of the nontransitory storage media **122***a* carried by the portable electric energy storage device **120***a* to a back-end system **160**. The data may be communicated by or across any number or type of networks

including plain old telephone service (POTS) wired connections, wireless networks, wired networks, the Internet, or combinations thereof. In some instances, the subscriber identifier may be communicated in an encrypted or otherwise protected format.

At **706**, the back-end system **160** validates the subscriber identifier provided by the at least one two-way distribution system controller **114**. In some instances, the back-end system **160** performs such a validation by decrypting (if needed) and comparing the subscriber identifier provided by the at least one two-way distribution system controller **114** with a list of known valid subscriber identifiers. The list of known valid subscriber identifiers may be stored, retained, or otherwise maintained in a data store or database on one or more back-end system readable nontransitory storage media.

Optionally, the back-end system **160** may look-up or otherwise determine the subscription plan logically associated with the received subscriber identifier. In some instances, the subscription plan information may be stored, retained, or otherwise maintained along with the valid subscriber identifiers in a data store or database on one or more back-end system readable nontransitory storage media.

At **708**, the back-end system **160** communicates data indicative of the success or failure of the subscriber identity validation to the at least one two-way distribution system controller **114**. The data indicative of the success or failure of the subscriber identity validation includes at least an indicator of the validity of the subscription logically associated with the subscriber identifier read from the portable electric energy storage device **120***a*. At times, the data indicative of the success or failure of the subscriber identity validation may include an indication of the number of charged portable electric energy storage devices **120** the at least one two-way distribution system controller **114** should release to the subscriber. At times, the data indicative of the success or failure of the subscriber identity validation may include an indication of the type, style, or operational parameters of the charged portable electric energy storage devices **120** the at least one two-way distribution system controller **114** should release to the subscriber. The method of verifying a subscriber identifier read by the at least one two-way distribution system controller **114** from the second portion of the nontransitory storage media **122***a* carried by a first portable electric energy storage device **120***a* concludes at **710**.

FIG. **8** shows a high-level flow diagram of an example method of assessing a received at least partially discharged portable electric energy storage device **120***a* and charging the portable electric energy storage device **120***a* under controlled thermal conditions, according to one illustrated embodiment. The at least partially discharged portable electric energy storage device **120***a* inserted into a first of the number of charging modules **112***a* may contain one or more faults that compromise the charge storage capacity or safety of the portable electric energy storage device **120***a*. To avoid potential failure of the portable electric energy storage device **120***a* during charging, after receiving and prior to charging the portable electric energy storage device **120***a*, the at least one two-way distribution system controller **114** may determine the condition of the portable electric energy storage device **120***a*. Responsive to determining the condition of the portable electric energy storage device **120** is acceptable for charging, the at least one two-way distribution system controller **114** can initiate charging of the portable electric energy storage device **120***a*. The at least one two-way distribution system controller **114** can control one or more charging conditions within a defined range during the charging process. The at least one two-way distribution system controller **114** can maintain and/or control conditions within the charging module **112**, the portable electric energy storage device **120***a*, or both. The method of assessing a received at least partially discharged portable electric energy storage device **120***a* and charging the portable electric energy storage device **120***a* under controlled thermal conditions commences at **802**.

At **804**, the at least partially discharged portable electric energy storage device **120***a* is received in the first of a number of charging modules **112***a*.

At **806**, responsive to the receipt of the first portable electric energy storage device **120***a* in the first charging module **112***a*, the at least one two-way distribution system controller **114** assesses the condition of the received portable electric energy storage device **120***a*. Such an assessment may consider the electrical charge storage capacity of the portable electric energy storage device **120***a*, the presence of internal or external electrical faults (e.g., shorts or opens) in the portable electric energy storage device **120***a*, the number of charge cycles on the portable electric energy storage device **120***a*, and the like.

In some instances, the at least one two-way distribution system controller **114** compares the assessed condition of the portable electric energy storage device **120***a* with defined, stored, acceptable values and/or value ranges to determine the suitability of the portable electric energy storage device **120***a* for charging. If the assessed condition falls outside of acceptable range, the at least one two-way distribution system controller **114** can isolate the first charging module **112***a*. Optionally, the at least one two-way distribution system controller **114** can communicate a message that includes data indicative of the failed portable electric energy storage device **120***a* to a back-end system **160**. Such data may include the identity of the portable electric energy storage device **120***a* and the assessment results, including an indication of the failed assessment parameters.

At **808**, responsive to a successful assessment of the condition of the portable electric energy storage device **120***a*, the at least one two-way distribution system controller **114** initiates charging of the portable electric energy storage device **120***a*.

At **810**, contemporaneous with charging the portable electric energy storage device **120***a*, the at least one two-way distribution system controller **114** controls or maintains one or more charging conditions within a defined range during the charging process. In some instances, the conditions may be maintained or controlled via changes to the charging module (e.g., limiting current flow to the portable electric energy storage device **120***a*). In some instances, the conditions may be alternatively or additionally maintained or controlled by altering conditions within the two-way distribution, charging, and vending system **110** (e.g., heating, cooling, and/or dehumidifying all or a portion of the interior of the two-way distribution, charging, and vending system **110**). In some instances, the conditions may be alternatively or additionally maintained or controlled by altering conditions within the portable electric energy storage device **120***a* (e.g., through the use of one or more phase change heat-transfer materials within the portable electric energy storage device **120***a*).

At times, the environmental conditions within the two-way distribution, charging, and vending system **110**, the charging module **112**, the portable electric energy storage device **120**, or combinations thereof may be controlled to optimize one or more operational aspects such as rapidity of

recharge, portable electric energy storage device life, portable electric energy storage device condition, or combinations thereof.

For example, the at least one two-way distribution system controller **114** maintains the temperature of a freshly inserted, at least partially discharged portable electric energy storage device **120** above a defined first temperature for a first interval to increase the initial charging rate. After the first interval expires, the at least one two-way distribution system controller **114** decreases the temperature of the at least partially discharged portable electric energy storage device **120** below a defined second temperature for the remaining duration of the charging period to maximize the lifecycle of the portable electric energy storage device **120**.

The method of assessing a received at least partially discharged portable electric energy storage device **120***a* and charging the portable electric energy storage device **120***a* under controlled thermal conditions concludes at **812**.

The various methods described herein may include additional acts, omit some acts, and/or may perform the acts in a different order than set out in the various flow diagrams.

The foregoing detailed description has set forth various embodiments of the devices and/or processes via the use of block diagrams, schematics, and examples. Insofar as such block diagrams, schematics, and examples contain one or more functions and/or operations, it will be understood by those skilled in the art that each function and/or operation within such block diagrams, flowcharts, or examples can be implemented, individually and/or collectively, by a wide range of hardware, software, firmware, or virtually any combination thereof. In one embodiment, the present subject matter may be implemented via one or more microcontrollers. However, those skilled in the art will recognize that the embodiments disclosed herein, in whole or in part, can be equivalently implemented in standard integrated circuits (e.g., Application Specific Integrated Circuits or ASICs), as one or more computer programs executed by one or more computers (e.g., as one or more programs running on one or more computer systems), as one or more programs executed by on one or more controllers (e.g., microcontrollers) as one or more programs executed by one or more processors (e.g., microprocessors), as firmware, or as virtually any combination thereof, and that designing the circuitry and/or writing the code for the software and/or firmware would be well within the skill of one of ordinary skill in the art in light of the teachings of this disclosure.

When logic is implemented as software and stored in memory, logic or information can be stored on any non-transitory computer-readable medium for use by or in connection with any processor-related system or method. In the context of this disclosure, a memory is a nontransitory computer- or processor-readable storage medium that is an electronic, magnetic, optical, or other physical device or means that non-transitorily contains or stores a computer and/or processor program. Logic and/or the information can be embodied in any computer-readable medium for use by or in connection with an instruction execution system, apparatus, or device, such as a computer-based system, processor-containing system, or other system that can fetch the instructions from the instruction execution system, apparatus, or device and execute the instructions associated with logic and/or information.

In the context of this specification, a "computer-readable medium" can be any physical element that can store the program associated with logic and/or information for use by or in connection with the instruction execution system, apparatus, and/or device. The computer-readable medium can be, for example, but is not limited to, an electronic, magnetic, optical, electromagnetic, infrared, or semiconductor system, apparatus or device. More specific examples (a non-exhaustive list) of the computer readable medium would include the following: a portable computer diskette (magnetic, compact flash card, secure digital, or the like), a random access memory (RAM), a read-only memory (ROM), an erasable programmable read-only memory (EPROM, EEPROM, or Flash memory), a portable compact disc read-only memory (CDROM), and digital tape.

The various embodiments described above can be combined to provide further embodiments. To the extent that they are not inconsistent with the specific teachings and definitions herein, all of the U.S. patents, U.S. patent application publications, U.S. patent applications, foreign patents, foreign patent applications and non-patent publications referred to in this specification and/or listed in the Application Data Sheet, including but not limited to: U.S. provisional patent application Ser. No. 61/601,949, entitled "APPARATUS, METHOD AND ARTICLE FOR PROVIDING LOCATIONS OF POWER STORAGE DEVICE COLLECTION, CHARGING AND DISTRIBUTION MACHINES" and filed Feb. 22, 2012; U.S. provisional patent application Ser. No. 61/511,900, entitled "APPARATUS, METHOD AND ARTICLE FOR COLLECTION, CHARGING AND DISTRIBUTING POWER STORAGE DEVICES, SUCH AS BATTERIES" and filed Jul. 26, 2011; U.S. provisional patent application Ser. No. 61/511,887, entitled "THERMAL MANAGEMENT OF COMPONENTS IN ELECTRIC MOTOR DRIVE VEHICLES" and filed Jul. 26, 2011; U.S. provisional patent application Ser. No. 61/783,041, entitled "APPARATUS, SYSTEM, AND METHOD FOR AUTHENTICATION OF VEHICULAR COMPONENTS" and filed Mar. 14, 2013; and U.S. provisional patent application Ser. No. 61/511,880, entitled "DYNAMICALLY LIMITING VEHICLE OPERATION FOR BEST EFFORT ECONOMY" and filed Jul. 26, 2011; are incorporated herein by reference, in their entirety. Aspects of the embodiments can be modified, if necessary, to employ systems, circuits and concepts of the various patents, applications and publications to provide yet further embodiments.

While generally discussed in the environment and context of collection and distribution of portable electrical energy storage devices for use with personal transportation vehicle such as all-electric scooters and/or motorbikes, the teachings herein can be applied in a wide variety of other environments, including other vehicular as well as non-vehicular environments.

The above description of illustrated embodiments, including what is described in the Abstract of the Disclosure, is not intended to be exhaustive or to limit the embodiments to the precise forms disclosed. Although specific embodiments and examples are described herein for illustrative purposes, various equivalent modifications can be made without departing from the spirit and scope of the disclosure, as will be recognized by those skilled in the relevant art.

These and other changes can be made to the embodiments in light of the above-detailed description. In general, in the following claims, the terms used should not be construed to limit the claims to the specific embodiments disclosed in the specification and the claims, but should be construed to include all possible embodiments along with the full scope of equivalents to which such claims are entitled. Accordingly, the claims are not limited by the disclosure.

We claim:

1. A charging module to charge portable electric energy storage devices, the charging module comprising:

a housing having a base, a peripheral wall secured to the base and an entrance into which a portable energy storage device can be inserted along a longitudinal axis of the housing and into an interior space formed by the peripheral housing wall;

a number of electric contacts projecting from the base at least partially into the interior space of the housing;

a locking mechanism projecting from the base at least partially into the interior space of the housing that is controllable to selectively mechanically engage the portable energy storage device;

a housing door positioned in the interior space of the housing, the housing door axially displaceable along the longitudinal axis of the housing from a first position perpendicular to the housing wall and proximate the entrance to at least a second position perpendicular to the housing wall and proximate the base of the housing;

an aperture concentric with the longitudinal axis of the housing through the housing door, the aperture to accommodate the passage of at least a portion of the locking mechanism and at least a portion of the number of electric contacts when the housing door is displaced to the second position;

at least one biasing element biasing the housing door towards the first position; and

a displaceable cover disposed proximate the aperture and displaceable from a closed position in which the aperture is occluded, to an open position in which the aperture is unobstructed, the cover operably coupled to the housing door and to the housing such that as the housing door is displaced from the first position to the second position, the cover is displaced from the closed position to the open position.

2. The charging module of claim 1, further comprising:

an actuator coupled to the locking mechanism, the actuator causing a displacement of the locking mechanism responsive to a receipt of the portable energy storage device in the interior space of the housing.

3. The charging module of claim 1, further comprising:

a modular electrical interface projecting from the base of the housing into the interior space of the housing.

4. The charging module of claim 1 wherein each of the number of electric contacts are positioned concentric to the longitudinal axis of the housing and electrically isolated from any other of the number of electric contacts.

5. The charging module of claim 4, wherein each of the number of electric contacts comprise a circularly annular electric contact positioned concentric to the longitudinal axis of the housing and electrically isolated from any other of the number of electric contacts.

6. The charging module of claim 4 wherein each of the number of electric contacts comprise at least one of: a polygonally annular electric contact or a rounded polygonally annular electric contact, each electric contact positioned concentric to the longitudinal axis of the housing and electrically isolated from any other of the number of electric contacts.

7. The charging module of claim 4 wherein the number of electric contacts form an electrically continuous circuit with a corresponding number of externally accessible electric contacts on the portable electric energy storage device when the portable electric energy storage device is inserted in the housing.

8. The charging module of claim 7 wherein the number of electric contacts form an electrically continuous circuit with a corresponding number of electric contacts on an exterior surface of the portable energy storage device independent of the rotation of the portable energy storage device casing about the longitudinal axis of the housing.

9. The charging module of claim 4 wherein the locking mechanism is positioned radially concentric to the number of electric contacts and is electrically isolated from the number of electric contacts.

10. The charging module of claim 1 wherein the displaceable cover comprises a rotatably displaceable cover; and

wherein the rotatably displaceable cover rotates from the closed position to the open position as the housing door is displaced from the first position to the second position.

11. The charging module of claim 1 wherein the displaceable cover comprises a slideably displaceable cover; and

wherein the slideably displaceable cover slides from the closed position to the open position as the housing door is displaced from the first position to the second position.

12. The charging module of claim 1 wherein a central region of the housing door includes a depression symmetric about two orthogonal transverse axes, the two orthogonal transverse axes mutually orthogonal to the longitudinal axis of the housing, the depression corresponding to a projecting portion of the portable energy storage device casing.

13. A charging module to charge portable electric energy storage devices, the charging module comprising:

a housing having a base, a peripheral wall secured to the base and an entrance into which a portable energy storage device can be inserted along a longitudinal axis of the housing and into an interior space formed by the peripheral housing wall;

a number of electric contacts projecting from the base at least partially into the interior space of the housing; and

a locking mechanism projecting from the base at least partially into the interior space of the housing that is controllable to selectively mechanically engage the portable energy storage device;

a portable electrical energy storage device thermal control system that includes:

at least one input channel communicably coupled to at least one two-way distribution system controller, the at least one input channel to receive an input signal from a portable electrical energy storage device inserted in the respective housing, the input signal including digital data representative of an internal temperature of the portable electrical energy storage device inserted in the respective charging module; and

at least one output channel communicably coupled to the at least one two-way distribution system controller, the at least one output channel to provide an output signal to at least one of a temperature control subsystem or a temperature control device to maintain the internal temperature of the portable electrical energy storage device inserted in the respective charging module in a defined range at least while charging the portable electrical energy storage device.

14. The charging module of claim 13, further comprising:

a housing door positioned in the interior space of the housing, the housing door axially displaceable along the longitudinal axis of the housing from a first position perpendicular to the housing wall and proximate the

entrance to at least a second position perpendicular to the housing wall and proximate the base of the housing.

**15**. The charging module of claim **14**, further comprising:

an aperture concentric with the longitudinal axis of the housing through the housing door, the aperture to accommodate the passage of at least a portion of the locking mechanism and at least a portion of the number of electric contacts when the housing door is displaced to the second position.

**16**. The charging module of claim **15**, further comprising:

at least one biasing element biasing the housing door towards the first position.

**17**. The charging module of claim **16**, further comprising:

a displaceable cover disposed proximate the aperture and displaceable from a closed position in which the aperture is occluded, to an open position in which the aperture is unobstructed, the cover operably coupled to the housing door and to the housing such that as the housing door is displaced from the first position to the second position, the cover is displaced from the closed position to the open position.

**18**. The charging module of claim **17** wherein the displaceable cover comprises a slideably displaceable cover; and

wherein the slideably displaceable cover slides from the closed position to the open position as the housing door is displaced from the first position to the second position.

**19**. The charging module of claim **13**, further comprising:

an actuator coupled to the locking mechanism, the actuator causing a displacement of the locking mechanism responsive to a receipt of the portable energy storage device in the interior space of the housing.

* * * * *