US010138672B2

(12) **United States Patent**
Hoyda et al.

(10) **Patent No.: US 10,138,672 B2**
(45) **Date of Patent: *Nov. 27, 2018**

(54) **MOUNTING SYSTEM FOR A CAMERA**

(71) Applicant: **Serge B. Hoyda**, Great Neck, NY (US)

(72) Inventors: **Serge B. Hoyda**, Great Neck, NY (US); **Zachary Bernard Hines**, Jackson Heights, NY (US)

(73) Assignee: **Serge B. Hoyda**, Great Neck, NY (US)

(*) Notice: Subject to any disclaimer, the term of this patent is extended or adjusted under 35 U.S.C. 154(b) by 0 days.

This patent is subject to a terminal disclaimer.

(21) Appl. No.: **15/161,173**

(22) Filed: **May 20, 2016**

(65) **Prior Publication Data**

US 2017/0026555 A1 Jan. 26, 2017

Related U.S. Application Data

(63) Continuation-in-part of application No. 14/898,130, filed as application No. PCT/US2015/065407 on Dec. 11, 2015.

(Continued)

(51) **Int. Cl.**
H04M 1/02 (2006.01)
F16M 13/02 (2006.01)

(Continued)

(52) **U.S. Cl.**
CPC ***E06B 7/30*** (2013.01); ***F16M 13/02*** (2013.01); ***G03B 17/14*** (2013.01); ***G03B 17/561*** (2013.01); ***G03B 17/566*** (2013.01); ***H04N 5/2251*** (2013.01); ***H04N 5/2252*** (2013.01); ***H04N 5/23293*** (2013.01); ***H04N 9/3141*** (2013.01)

(58) **Field of Classification Search**
CPC H05K 7/00–7/2099; H05K 5/00–5/069; G06T 2207/30221–2207/30236; G08B 13/196–13/19697; G03B 17/54; G03B 21/00–21/64
USPC 361/600–837; 348/333.1, 143–160, 46; 349/5–10
See application file for complete search history.

(56) **References Cited**

U.S. PATENT DOCUMENTS

4,892,386 A 1/1990 Suzuki et al.
5,096,287 A 3/1992 Kakinami et al.
(Continued)

FOREIGN PATENT DOCUMENTS

EP 0 990 834 A1 4/2000
WO 2006/027563 A1 3/2006
(Continued)

OTHER PUBLICATIONS

International Search Report of PCT/US15/65255, dated Mar. 29, 2016.

(Continued)

Primary Examiner — Xi Wang
(74) *Attorney, Agent, or Firm* — Collard & Roe, P.C.

(57) **ABSTRACT**

There is an apparatus for viewing on another side of a door comprising at least one mount, and at least one electronic device configured to be coupled to the at least one mount. There can be at least one camera coupled to the electronic device and to the at least one mount. There can also be at least one coupling element for coupling the electronic device to the mount and wherein the mount is configured to allow the electronic device to be mounted on a surface.

24 Claims, 67 Drawing Sheets

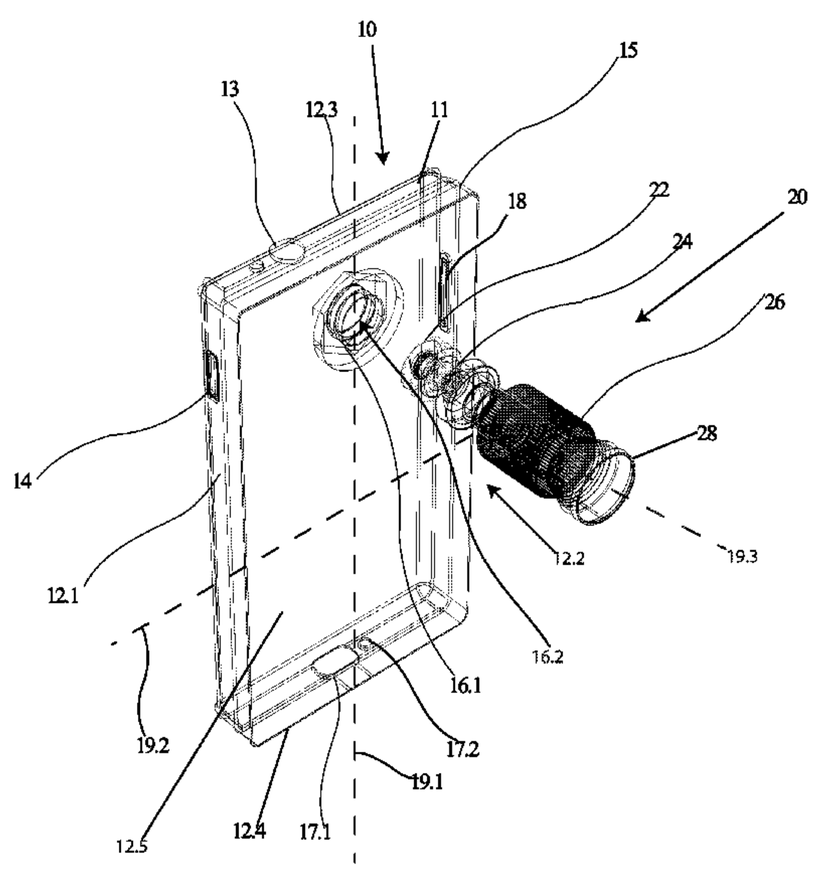

Related U.S. Application Data

(60) Provisional application No. 62/323,624, filed on Apr. 16, 2016, provisional application No. 62/181,165, filed on Jun. 17, 2015, provisional application No. 62/091,346, filed on Dec. 12, 2014.

(51) **Int. Cl.**

G02B 7/02	(2006.01)
E06B 7/30	(2006.01)
G03B 17/56	(2006.01)
G03B 17/14	(2006.01)
H04N 5/232	(2006.01)
H04N 9/31	(2006.01)
H04N 5/225	(2006.01)

(56) **References Cited**

U.S. PATENT DOCUMENTS

5,727,960	A *	3/1998	Zehrung	E05D 11/0081 16/223
6,115,651	A	9/2000	Cruz	
6,122,865	A *	9/2000	Branc	G09F 15/0068 52/239
6,859,148	B2	2/2005	Miller et al.	
6,954,152	B1	10/2005	Matthews	
7,049,945	B2	5/2006	Breed et al.	
8,004,425	B2	8/2011	Hoek et al.	
8,624,716	B2	1/2014	Englander	
2002/0003571	A1	1/2002	Schofield et al.	
2002/0124479	A1	9/2002	Branc et al.	
2003/0095185	A1 *	5/2003	Naifeh	H04N 7/185 348/156
2003/0167693	A1 *	9/2003	Mainini	E05B 47/0012 49/28
2004/0211868	A1	10/2004	Holmes et al.	
2006/0197019	A1	9/2006	Satou	
2006/0221183	A1 *	10/2006	Sham	H04N 7/186 348/155
2007/0035385	A1	2/2007	Miyahara et al.	
2007/0080267	A1 *	4/2007	Richter	B60R 11/02 248/160
2007/0084500	A1 *	4/2007	Chen	F16M 11/14 136/244
2007/0170321	A1	7/2007	Smed	
2008/0099655	A1 *	5/2008	Goodman	F16M 11/14 248/674
2008/0117298	A1	5/2008	Torres	
2008/0136915	A1 *	6/2008	Iwamura	H04N 7/181 348/159
2008/0203308	A1	8/2008	Yoo	
2009/0091618	A1 *	4/2009	Anderson	B60R 1/00 348/143
2010/0231719	A1	9/2010	Nakamura et al.	
2010/0315507	A1	12/2010	Chrobocinski et al.	
2010/0321408	A1	12/2010	Miceli et al.	
2011/0267466	A1	11/2011	Brester	
2011/0292213	A1 *	12/2011	Lacey	H04N 7/181 348/153
2012/0105638	A1	5/2012	Englander	
2013/0169469	A1	7/2013	Mitsuta et al.	
2013/0193173	A1	8/2013	Bonito et al.	
2015/0002633	A1 *	1/2015	Hayashi	G03B 17/54 348/46
2015/0002642	A1	1/2015	Dressler	
2015/0282346	A1	10/2015	Ganim et al.	
2016/0050399	A1 *	2/2016	Chuter	H04N 7/186 348/155
2016/0062217	A1	3/2016	Slater	
2016/0288713	A1	10/2016	Hoyda et al.	
2017/0026555	A1	1/2017	Hoyda et al.	

FOREIGN PATENT DOCUMENTS

WO	2007/081894	A2	7/2007
WO	2014/162260	A1	10/2014
WO	2016/094801	A1	6/2016
WO	2016/094882	A1	6/2016

OTHER PUBLICATIONS

International Search Report of PCT/US15/65407, dated Feb. 25, 2016.

Non-Final Office Action in U.S. Appl. No. 14/898,129 dated Oct. 12, 2017.

International Preliminary Report on Patentability and Written Opinion of the International Searching Authority of PCT/US2015/065255 dated Jun. 22, 2017.

International Preliminary Report on Patentability and Written Opinion of the International Searching Authority of PCT/US2015/065407 dated Jun. 22, 2017.

International Search Report and Written Opinion of the International Searching Authority with Notice of Transmittal of the International Search Report and Written Opinion of PCT/US17/27972, dated Jun. 29, 2017.

Non-Final Office Action in U.S. Appl. No. 14/898,130 dated Jul. 31, 2017.

Non-Final Office Action in U.S. Appl. No. 15/161,189 dated Nov. 3, 2016.

Final Office Action in U.S. Appl. No. 15/161,189 dated Mar. 9, 2017.

* cited by examiner

FIG. 1

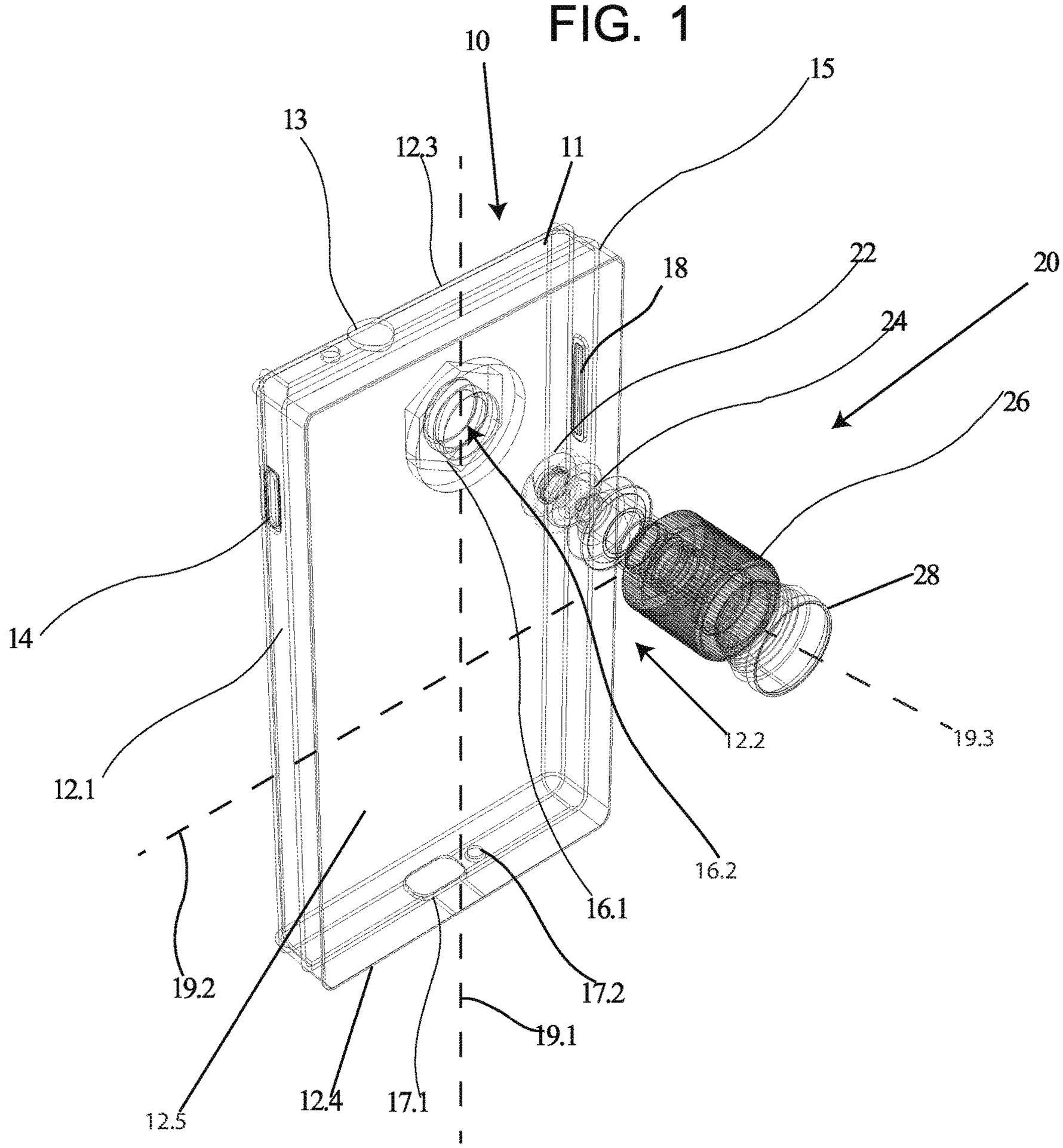
10
15
13
12.3
11
22
20
18
24
26
28
14
12.1
12.2
19.3
16.2
16.1
19.2
17.2
19.1
12.5
12.4
17.1

FIG. 2

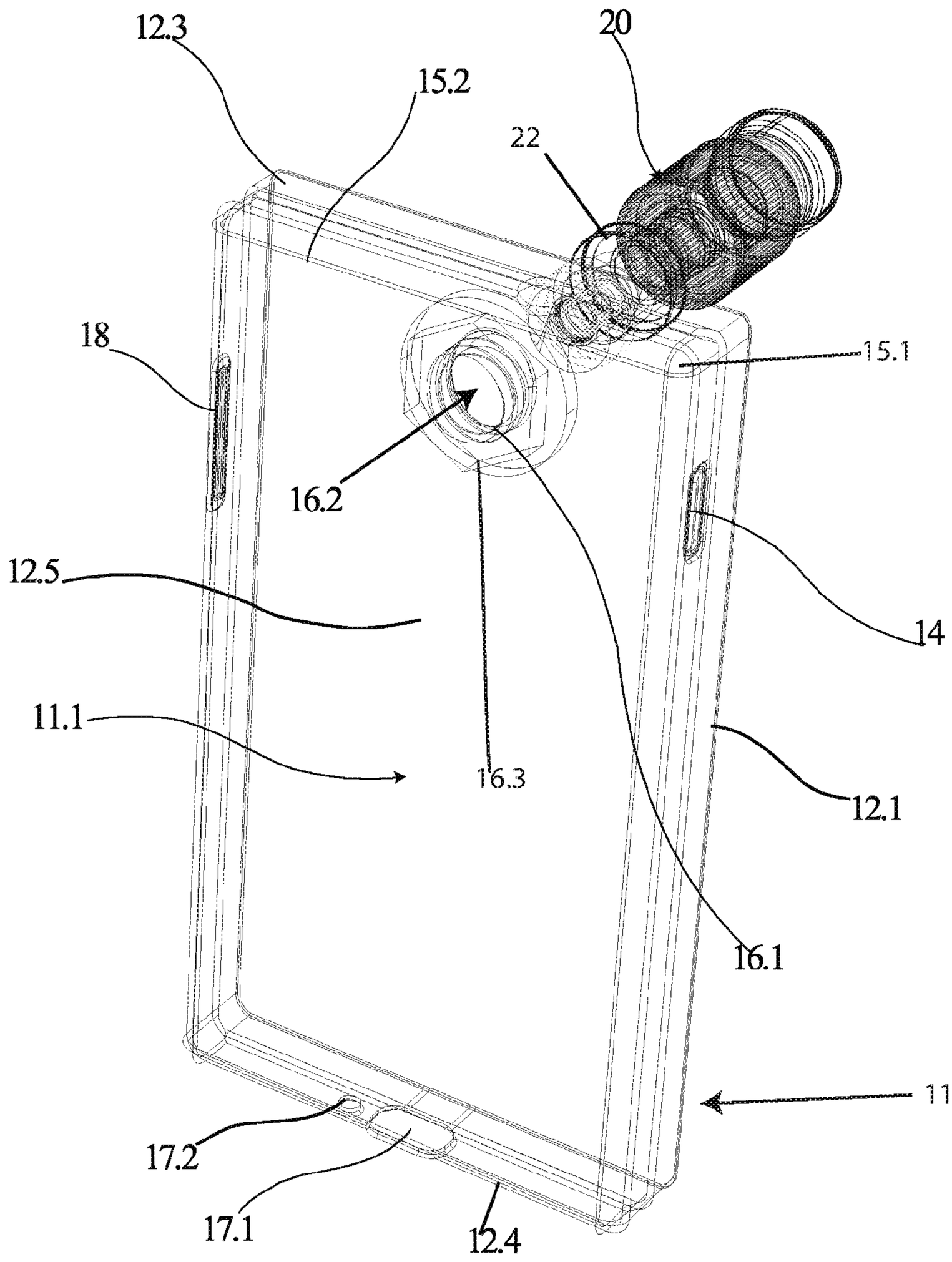

FIG. 3

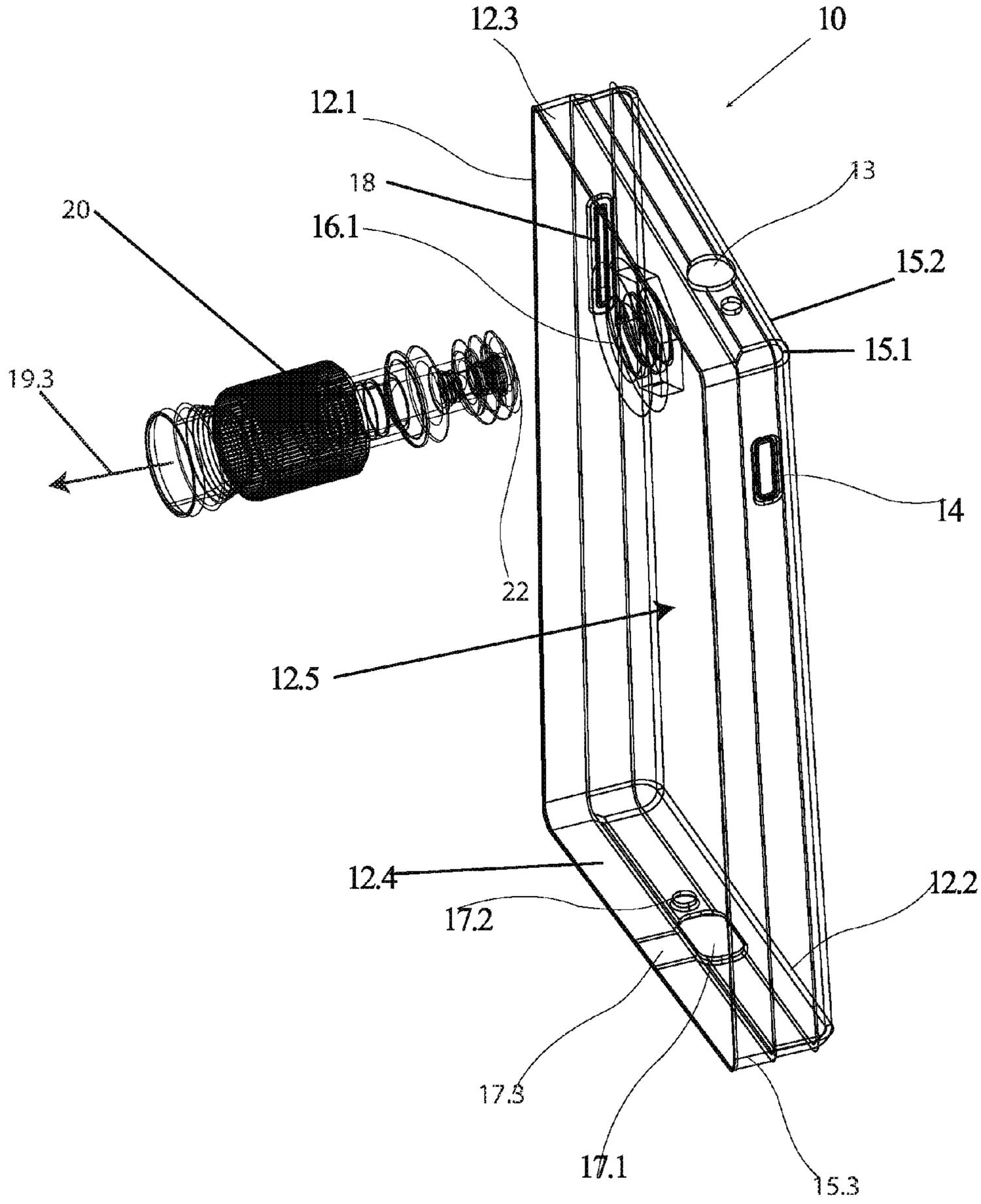
12.3
10
12.1
18
13
20
16.1
15.2
15.1
19.3
14
22
12.5
12.4
12.2
17.2
17.3
17.1
15.3

FIG. 4A

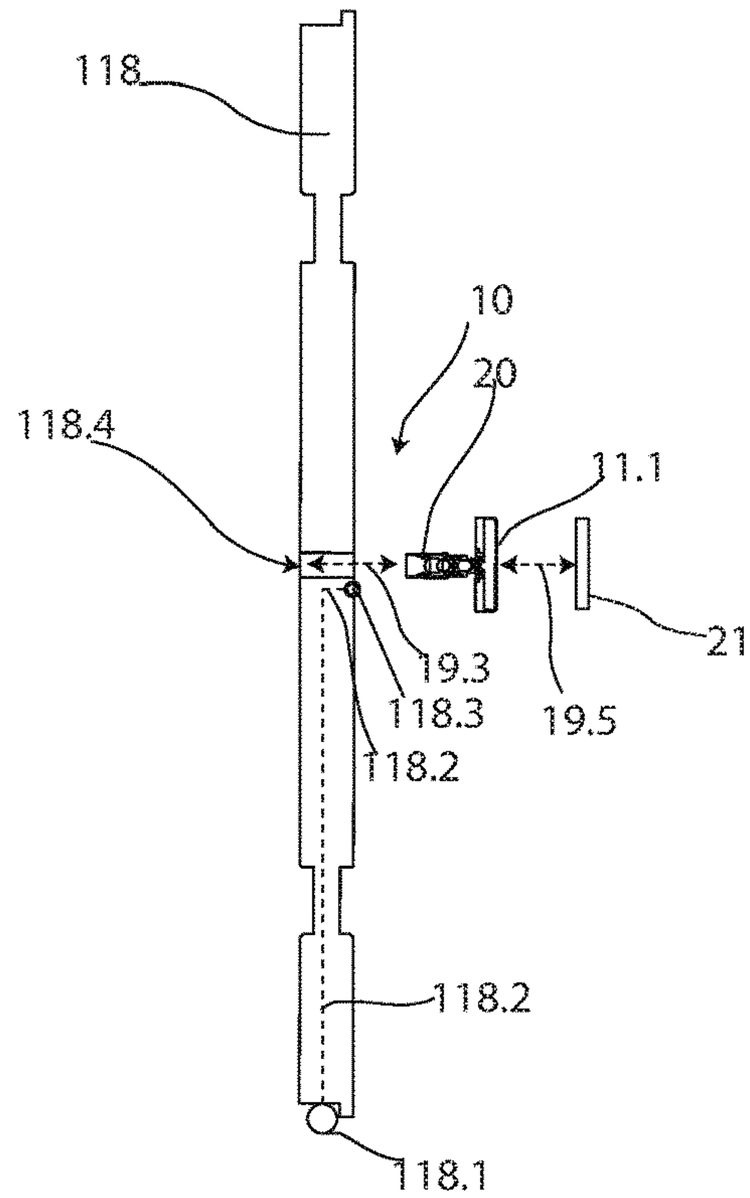

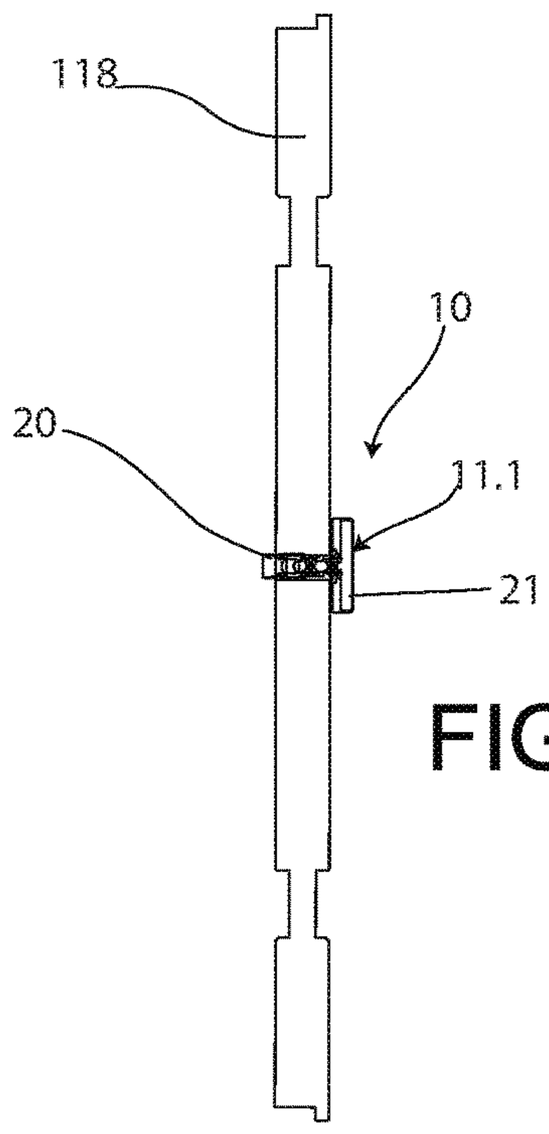

FIG. 4B

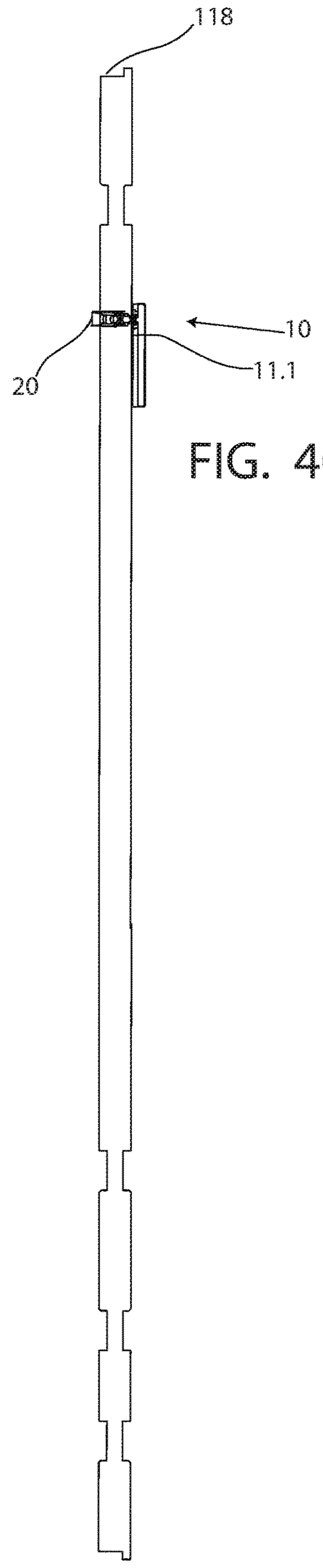

FIG. 4C

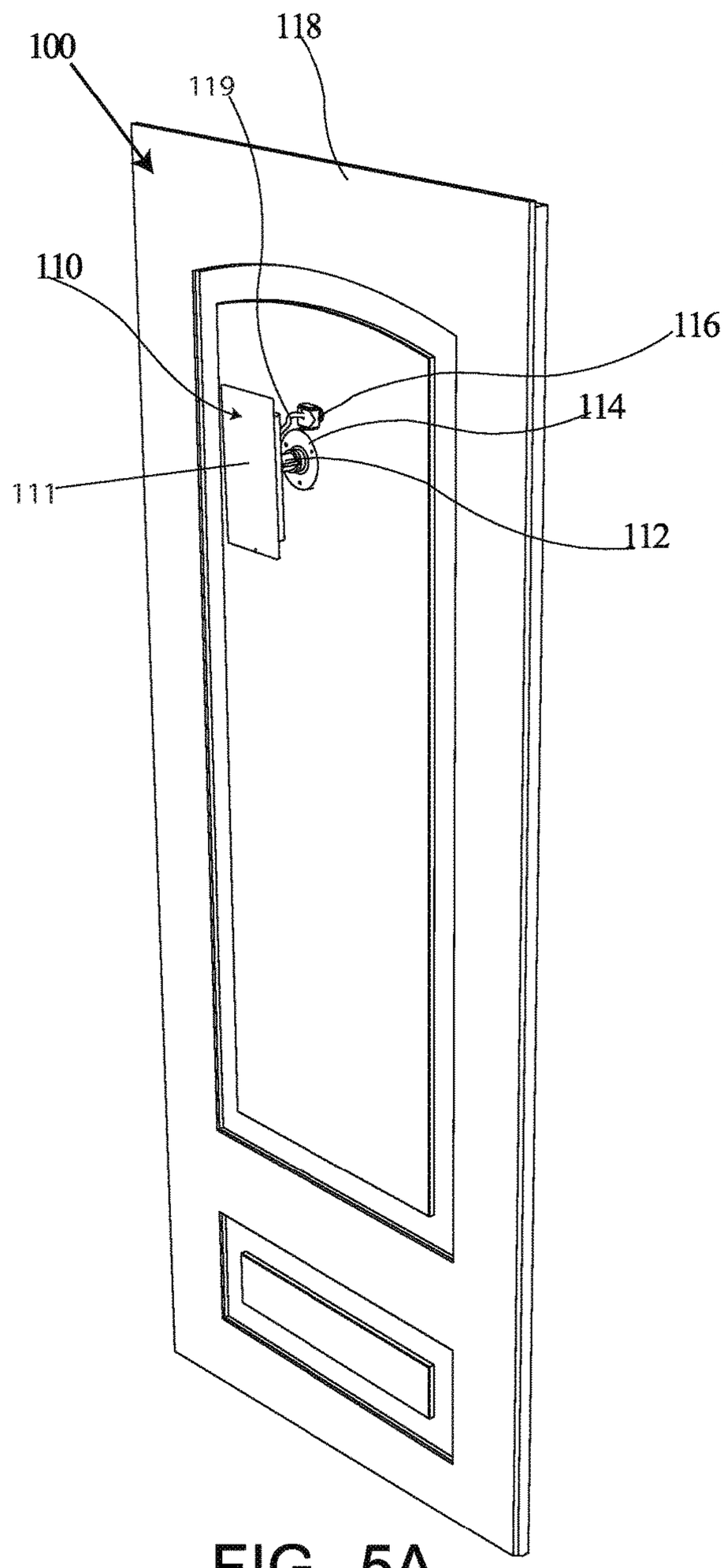

FIG. 5A

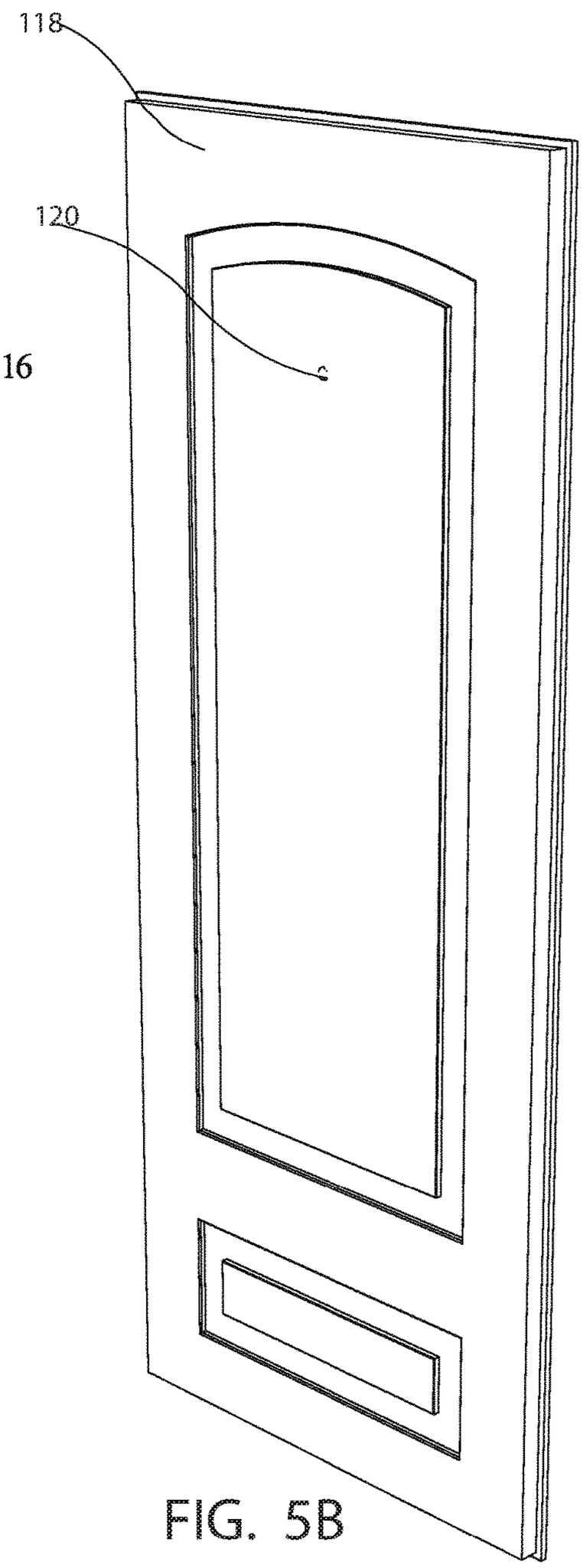

FIG. 5B

FIG. 6

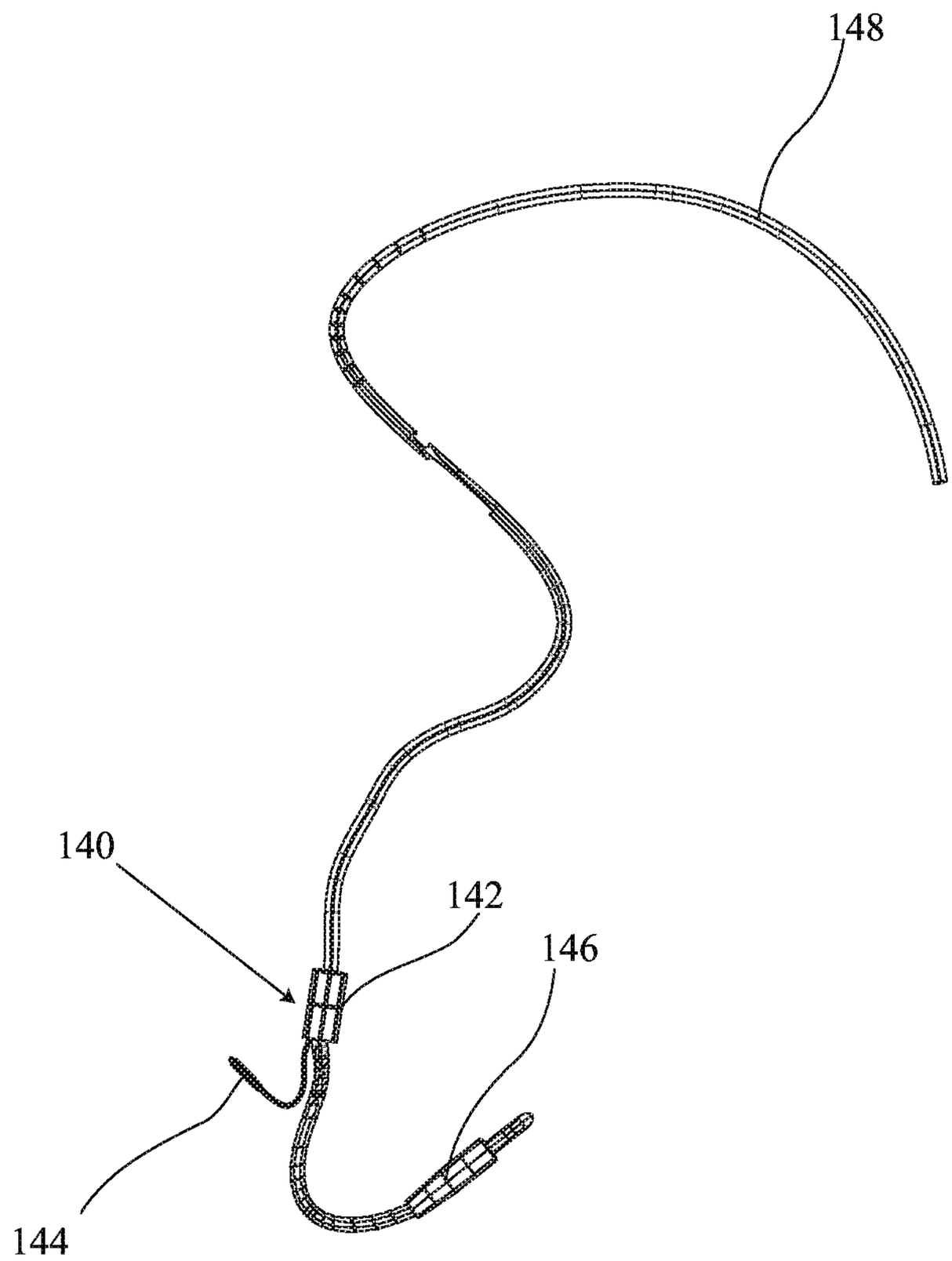

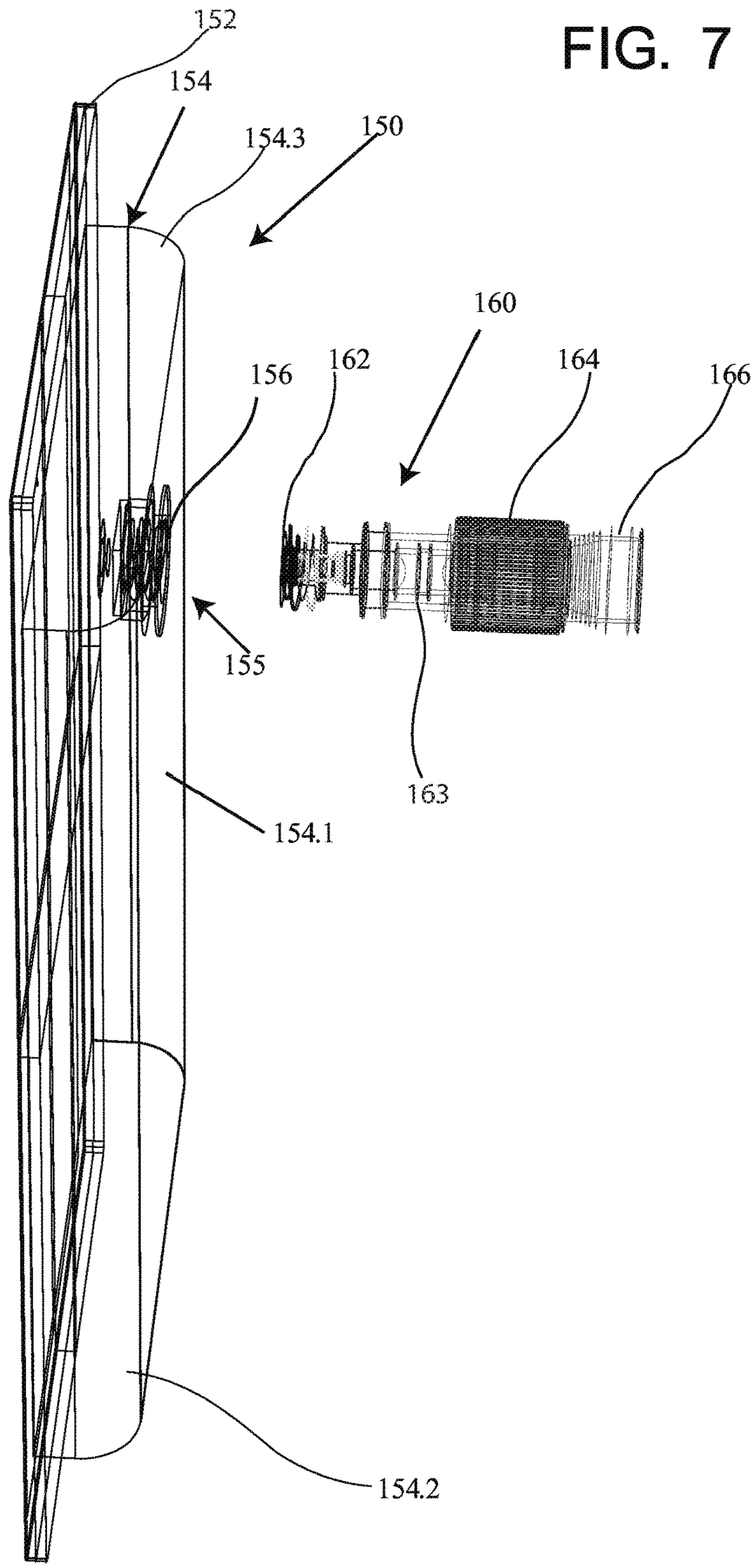

FIG. 7

FIG. 8

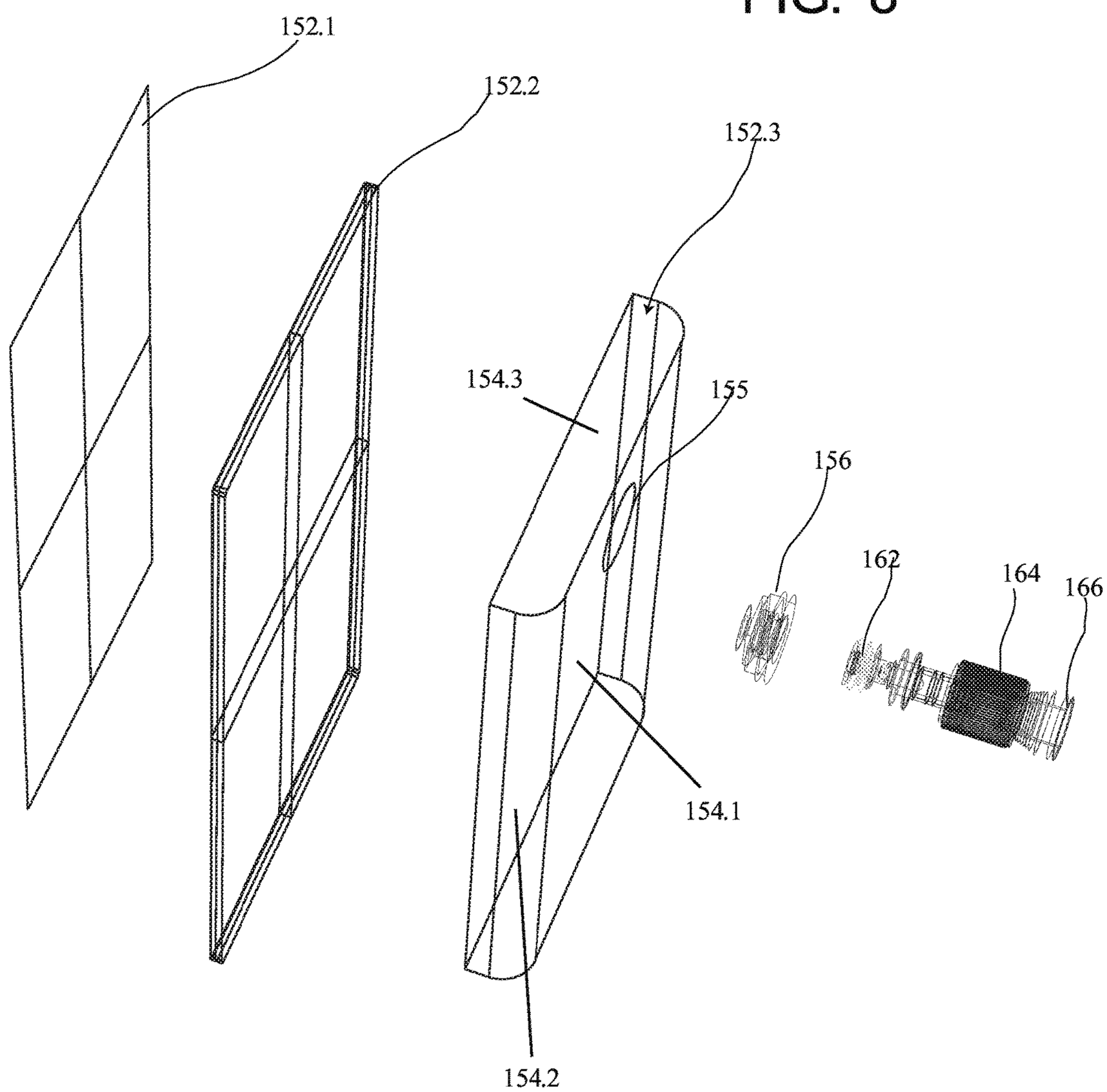

FIG. 9

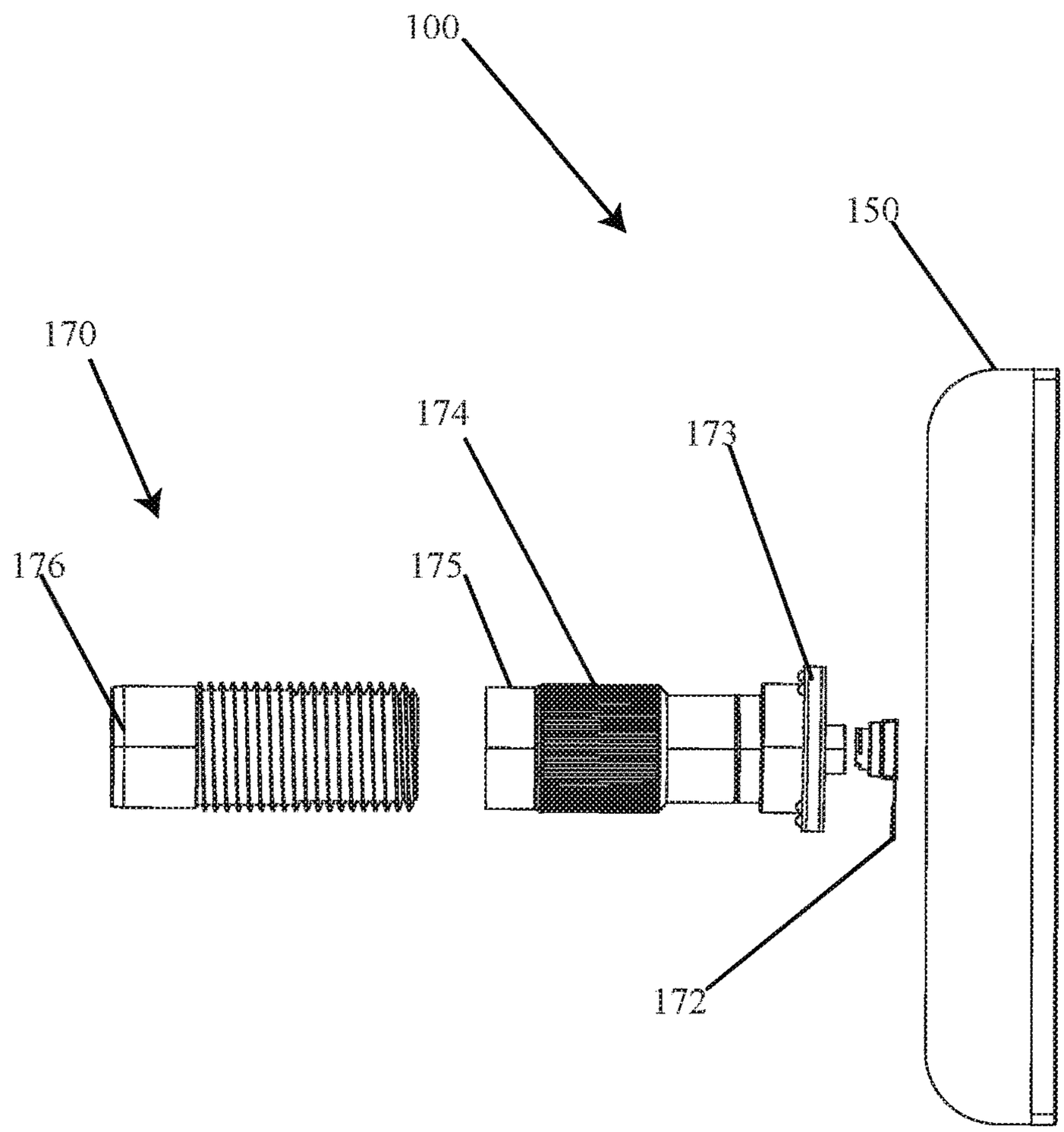

FIG. 10

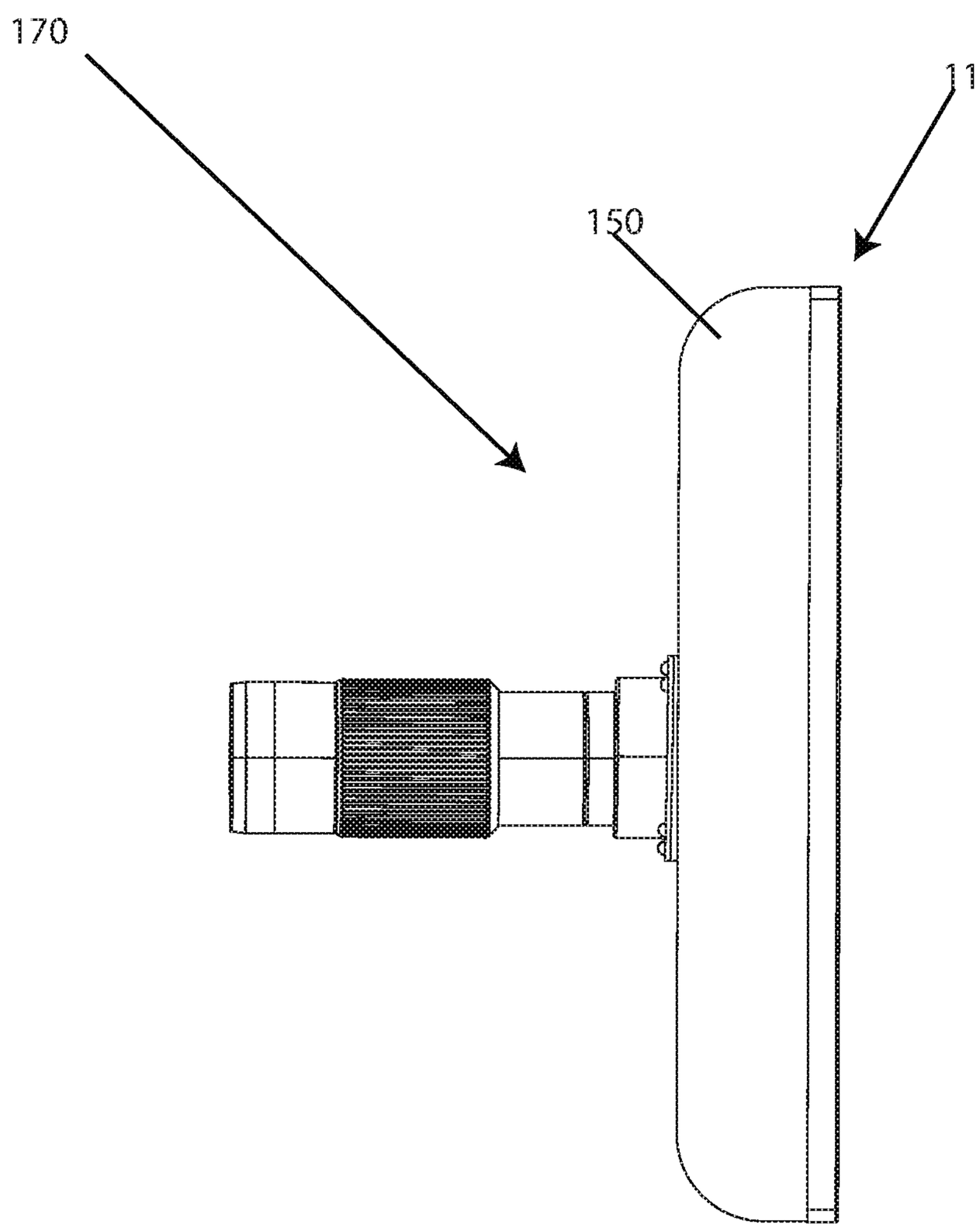

FIG. 11

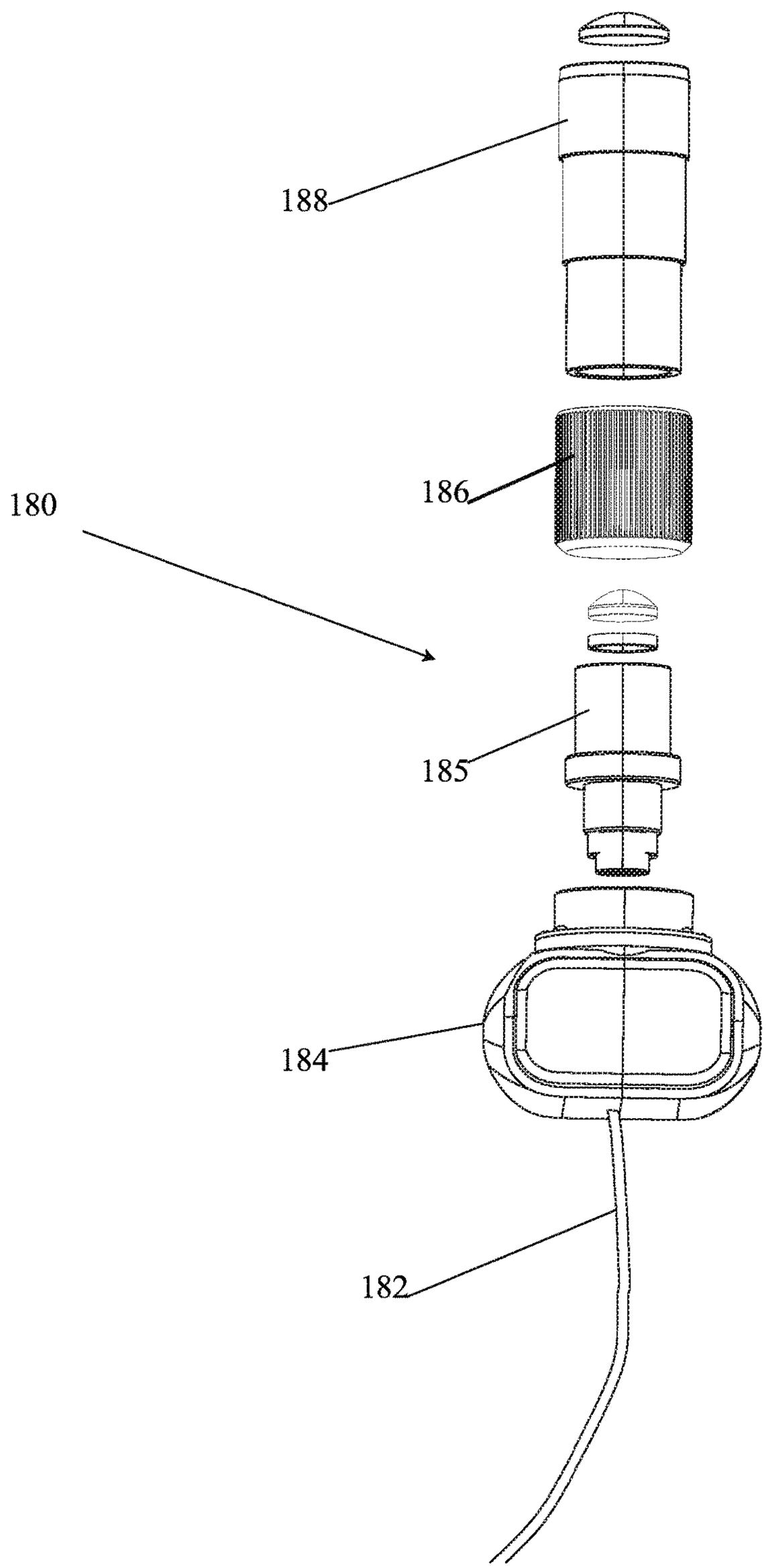

FIG. 12

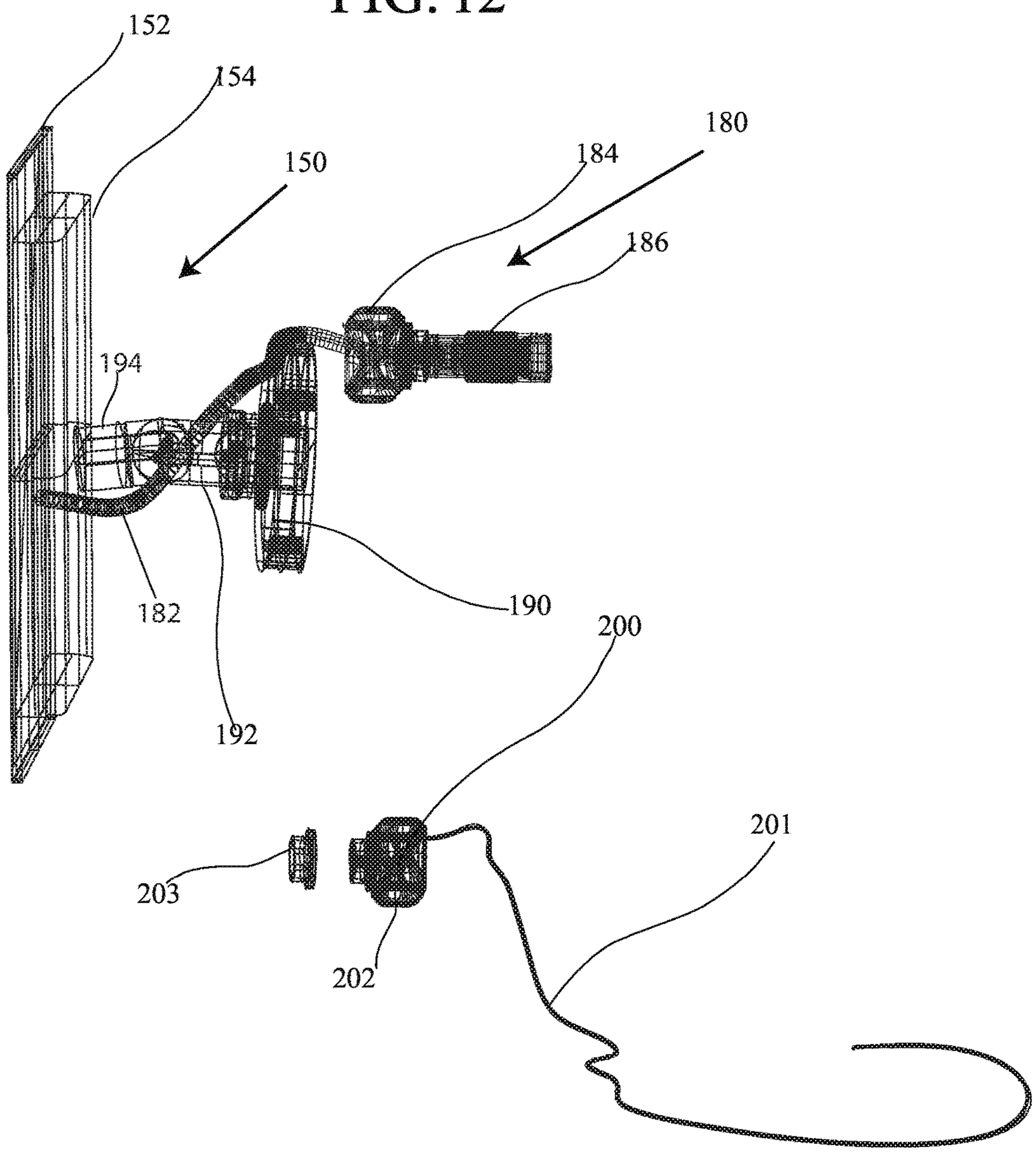

FIG. 13

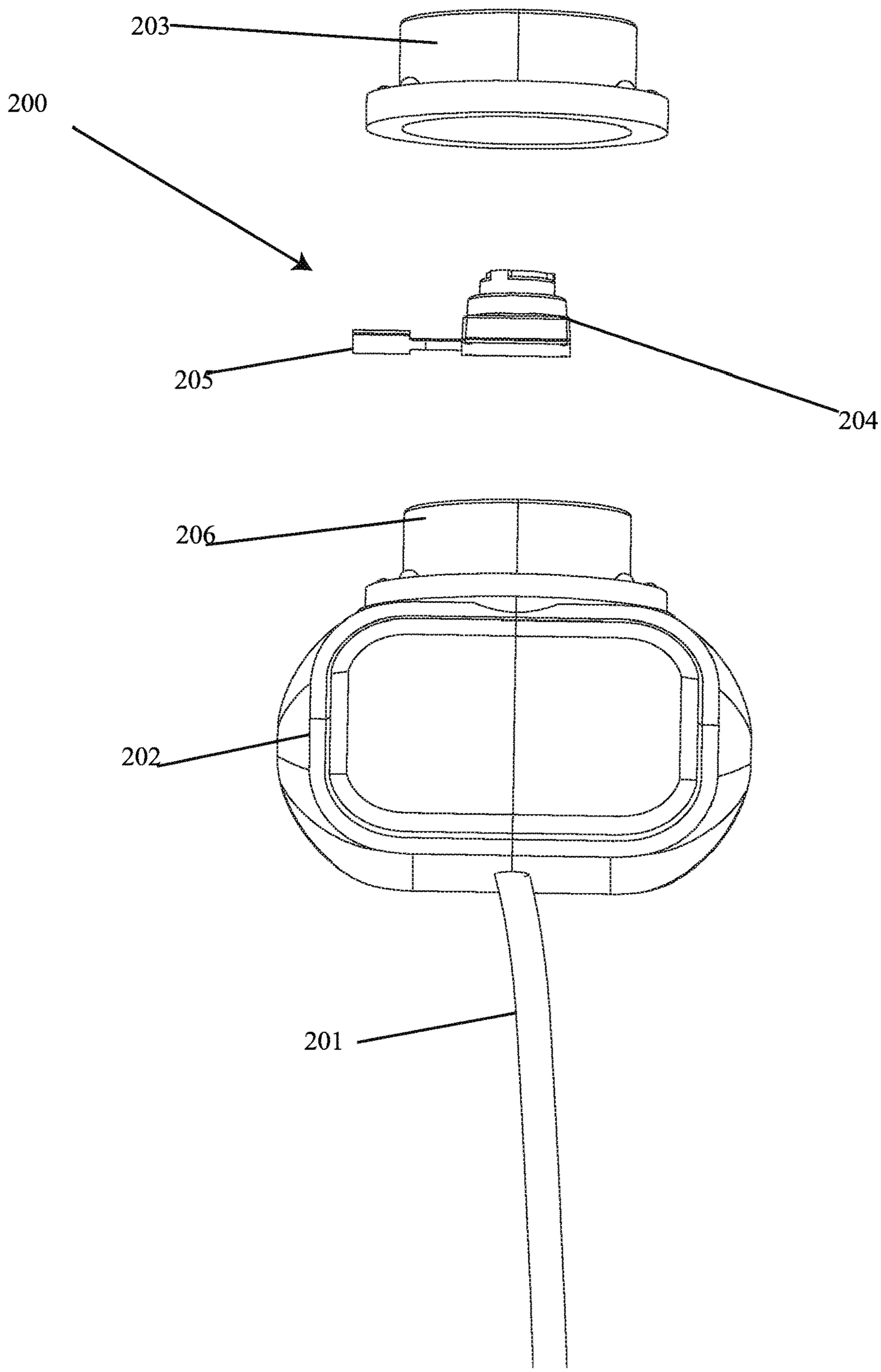

FIG. 14

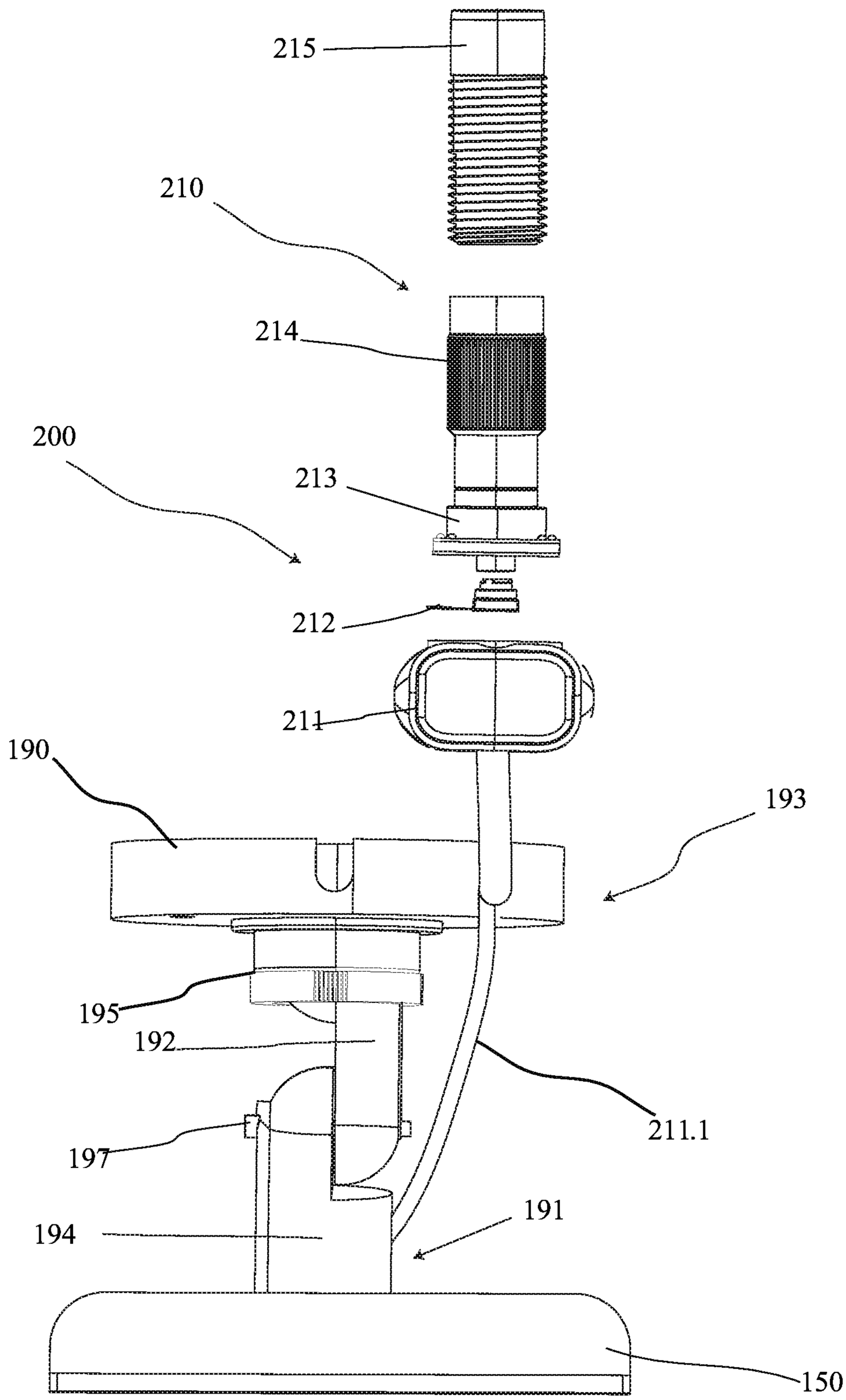

FIG. 15

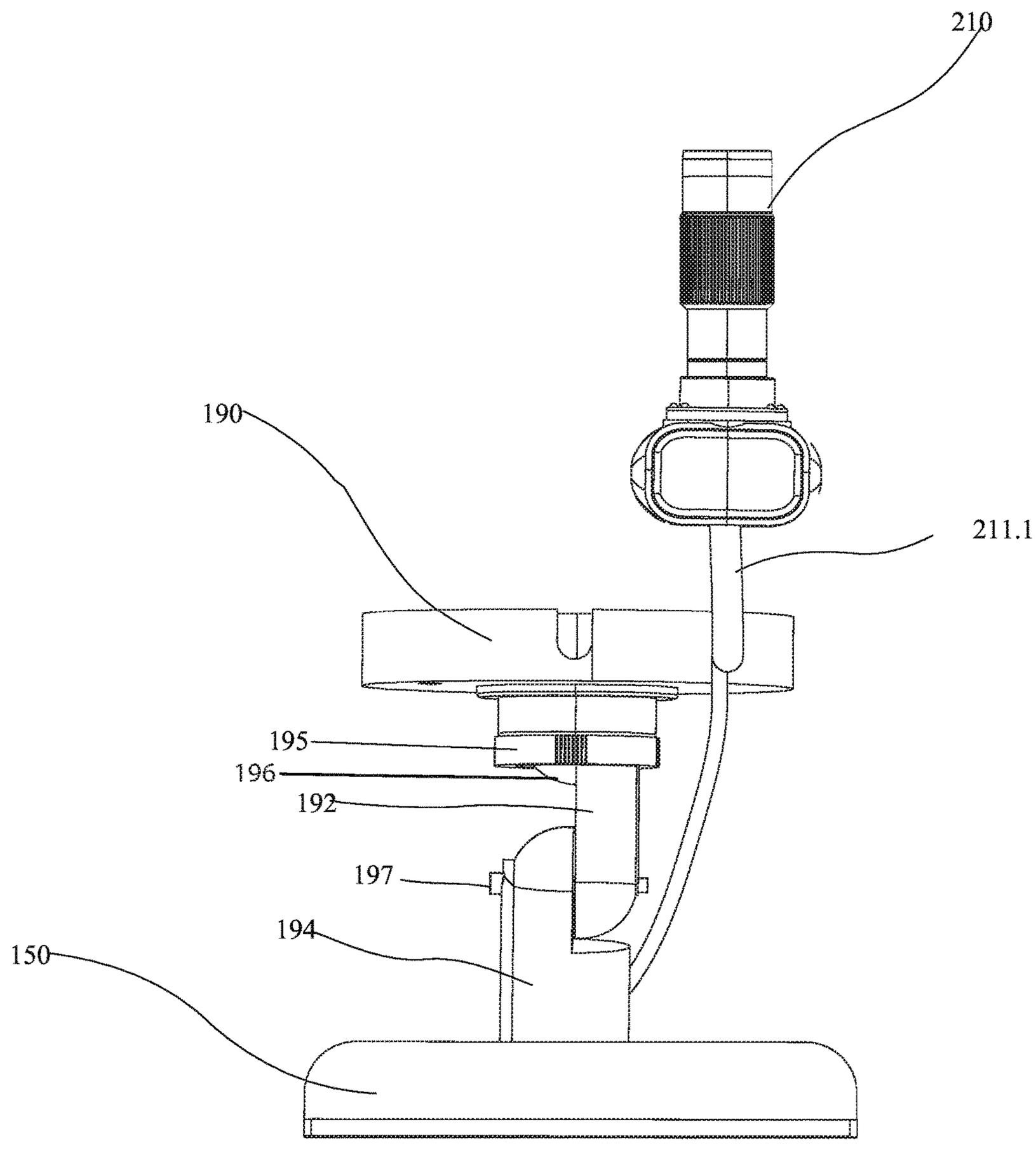

FIG. 16

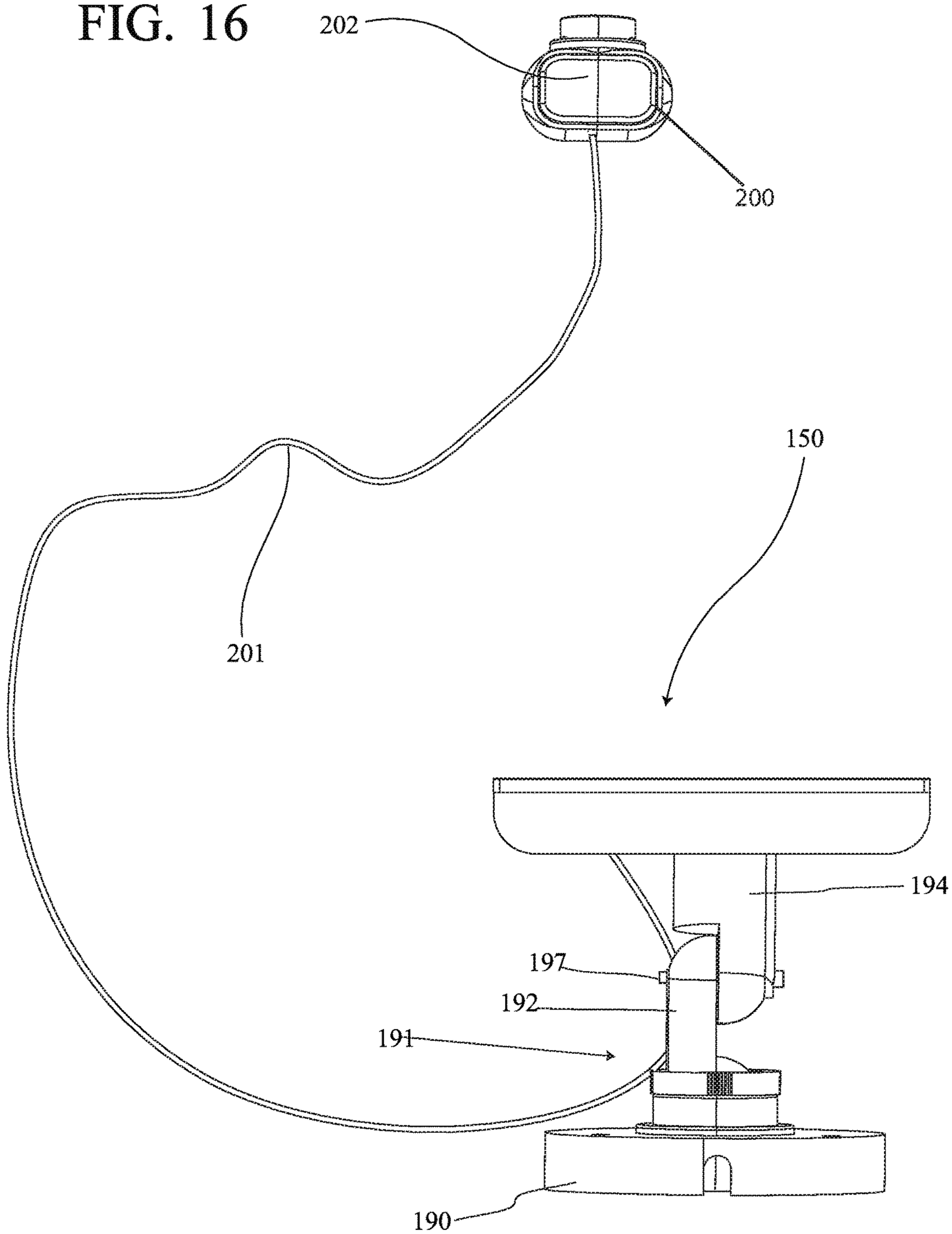

FIG. 17

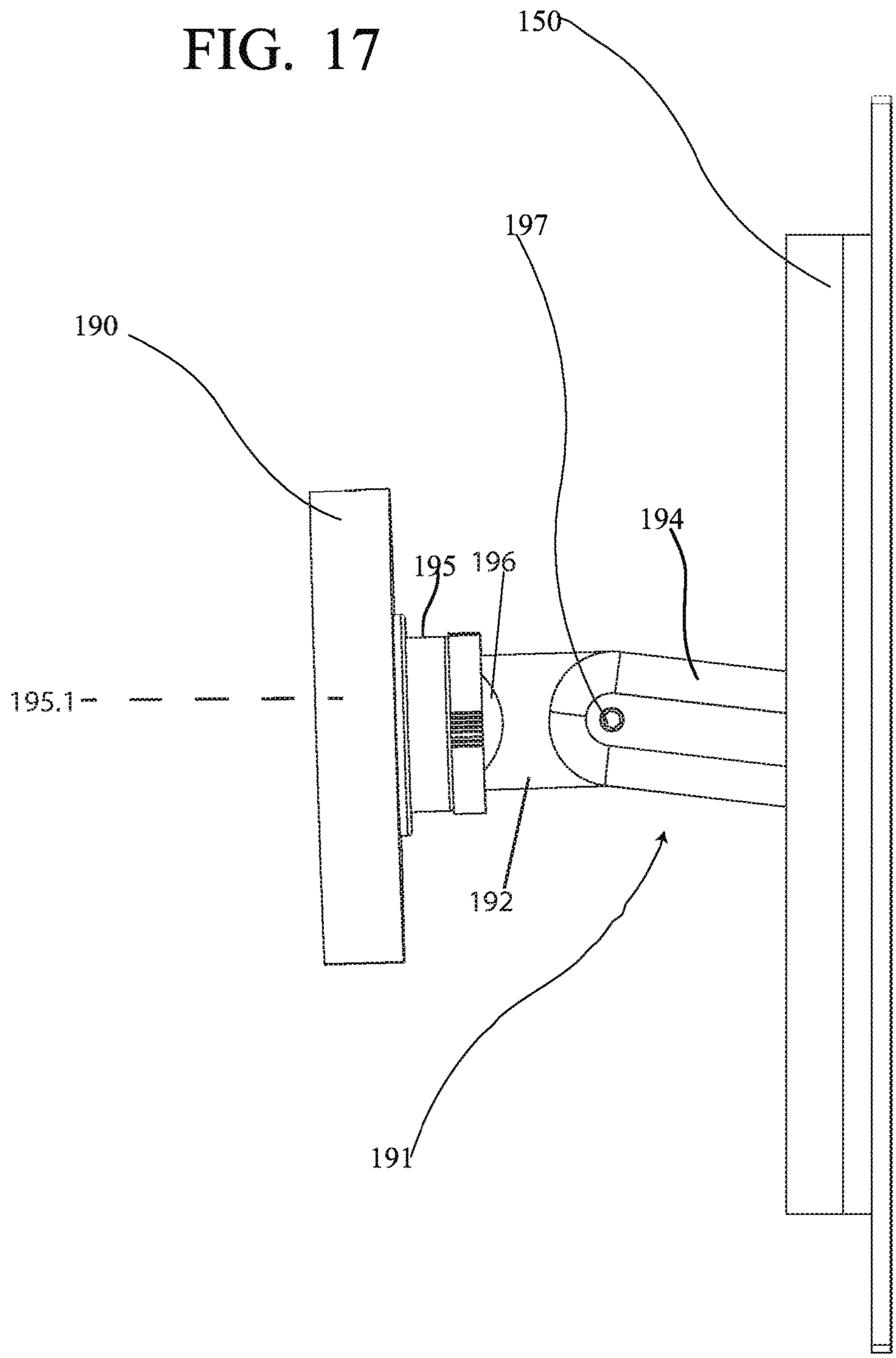

FIG. 18

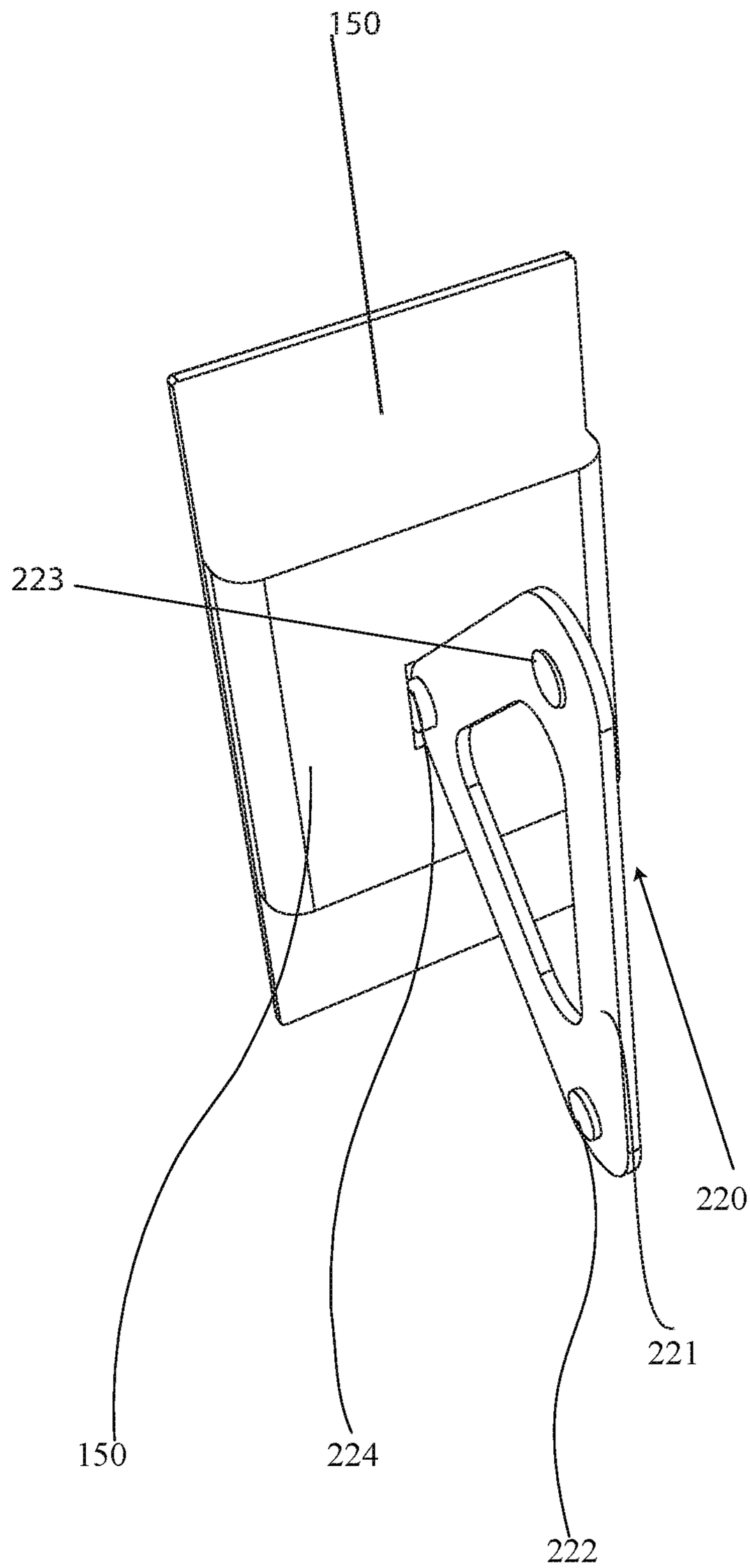

FIG. 19

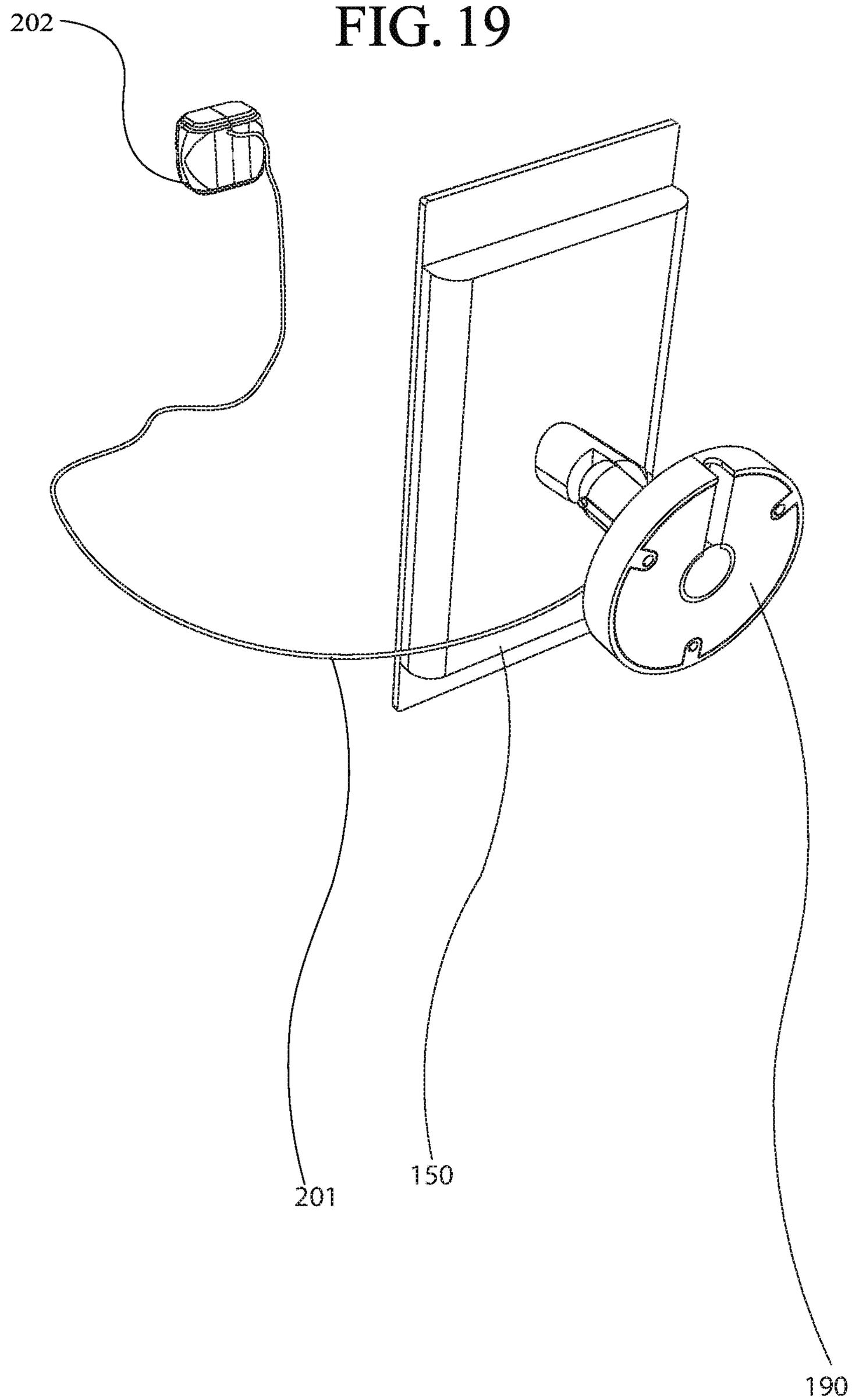

FIG. 20

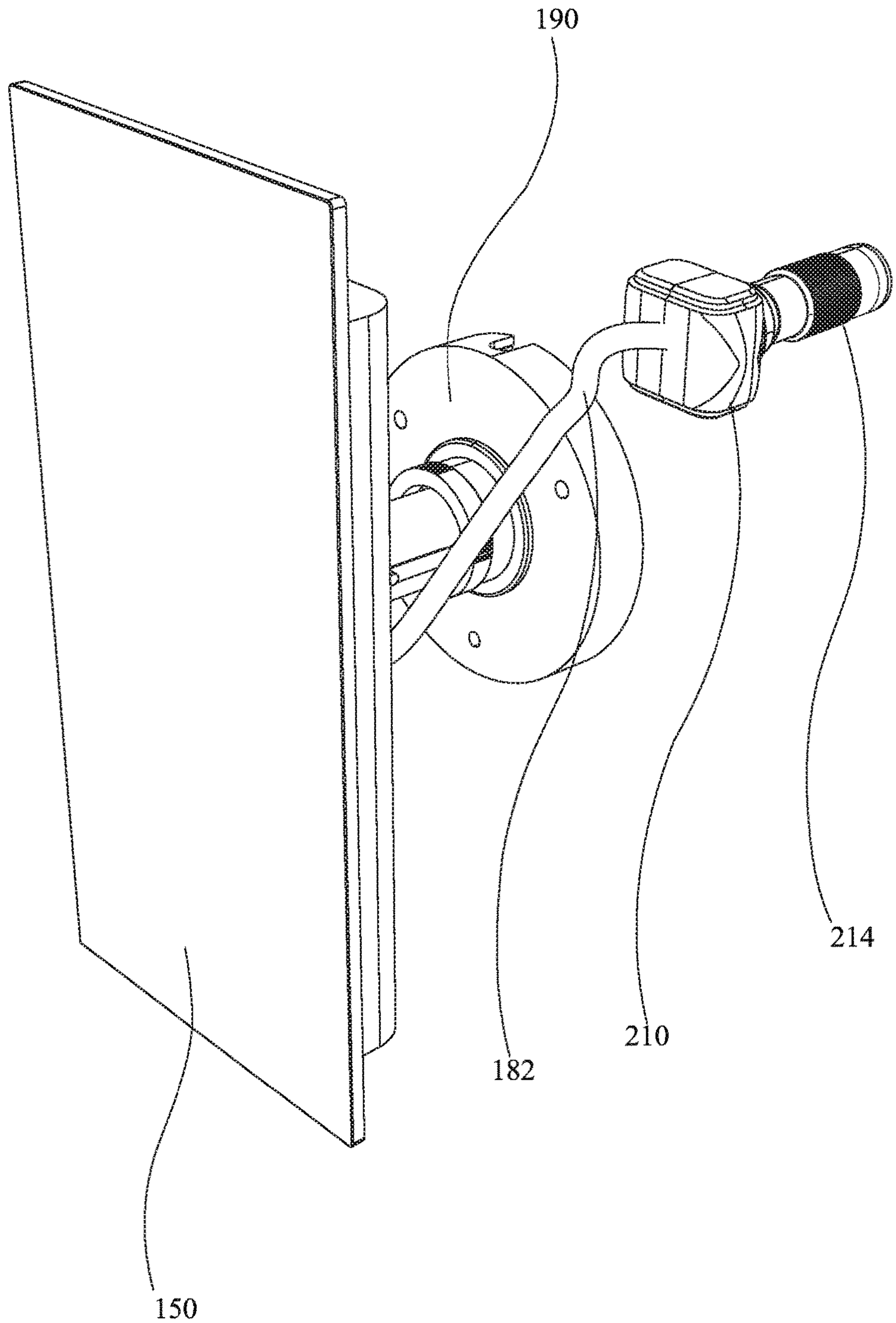

FIG. 21

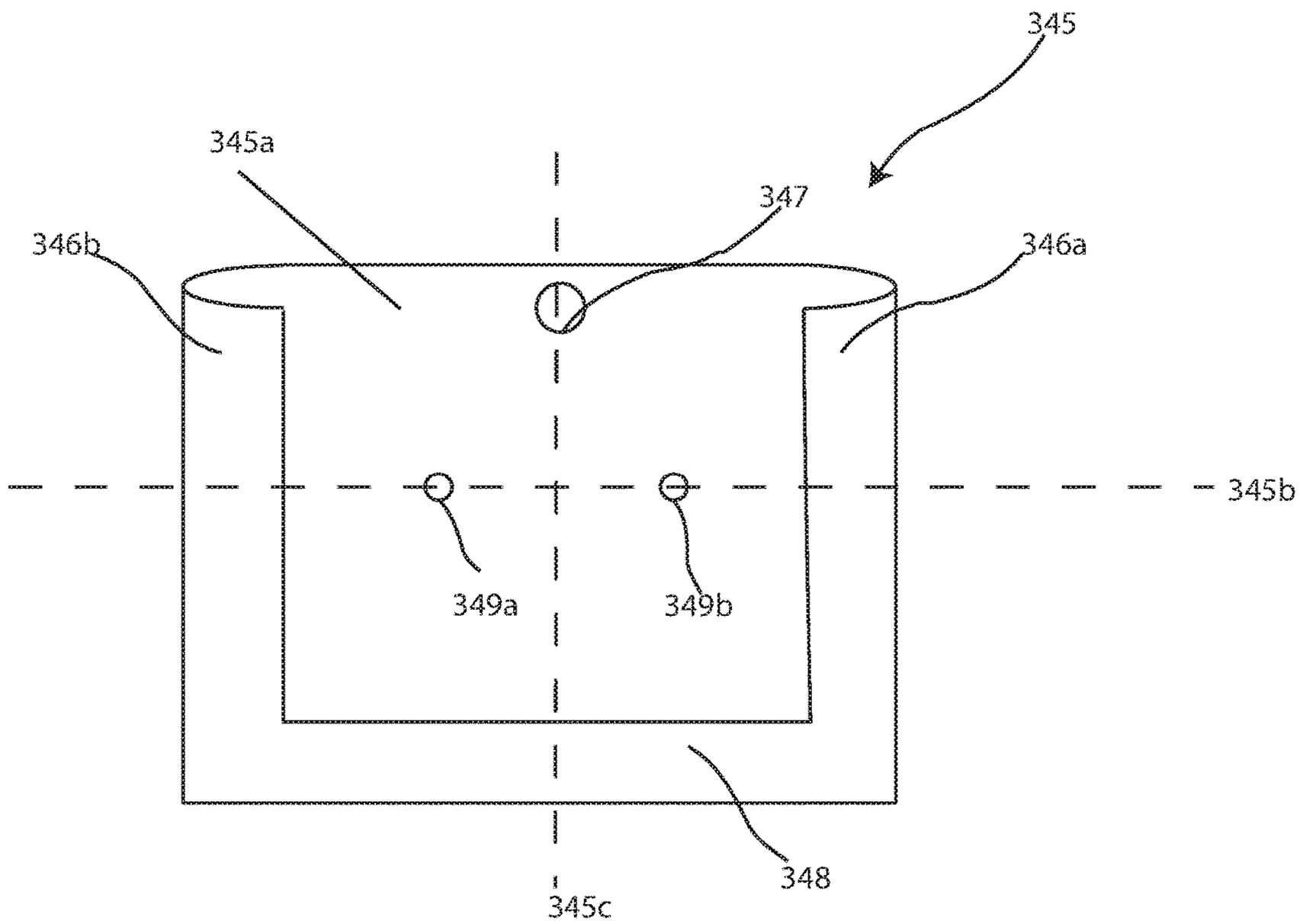

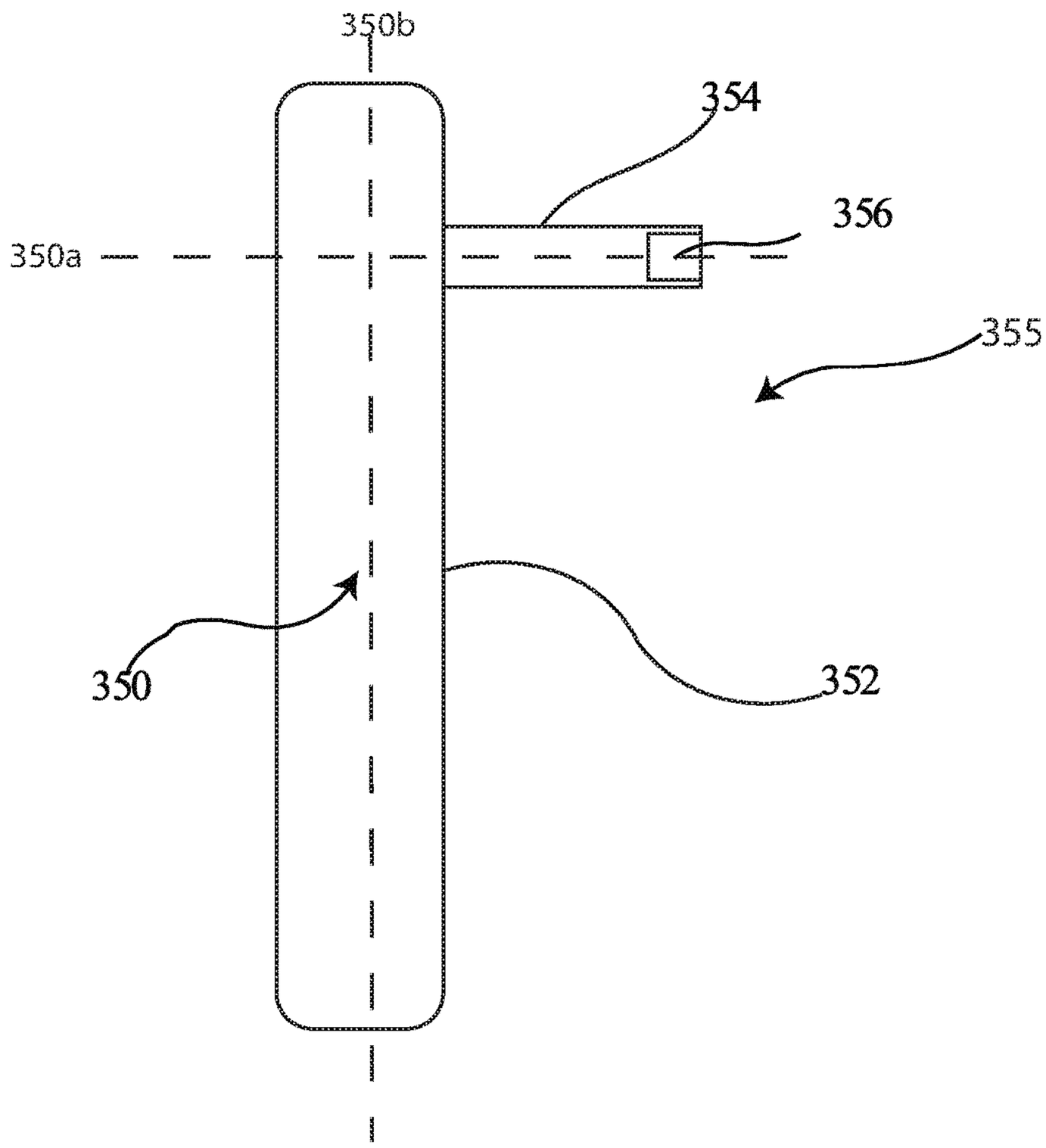

FIG. 22

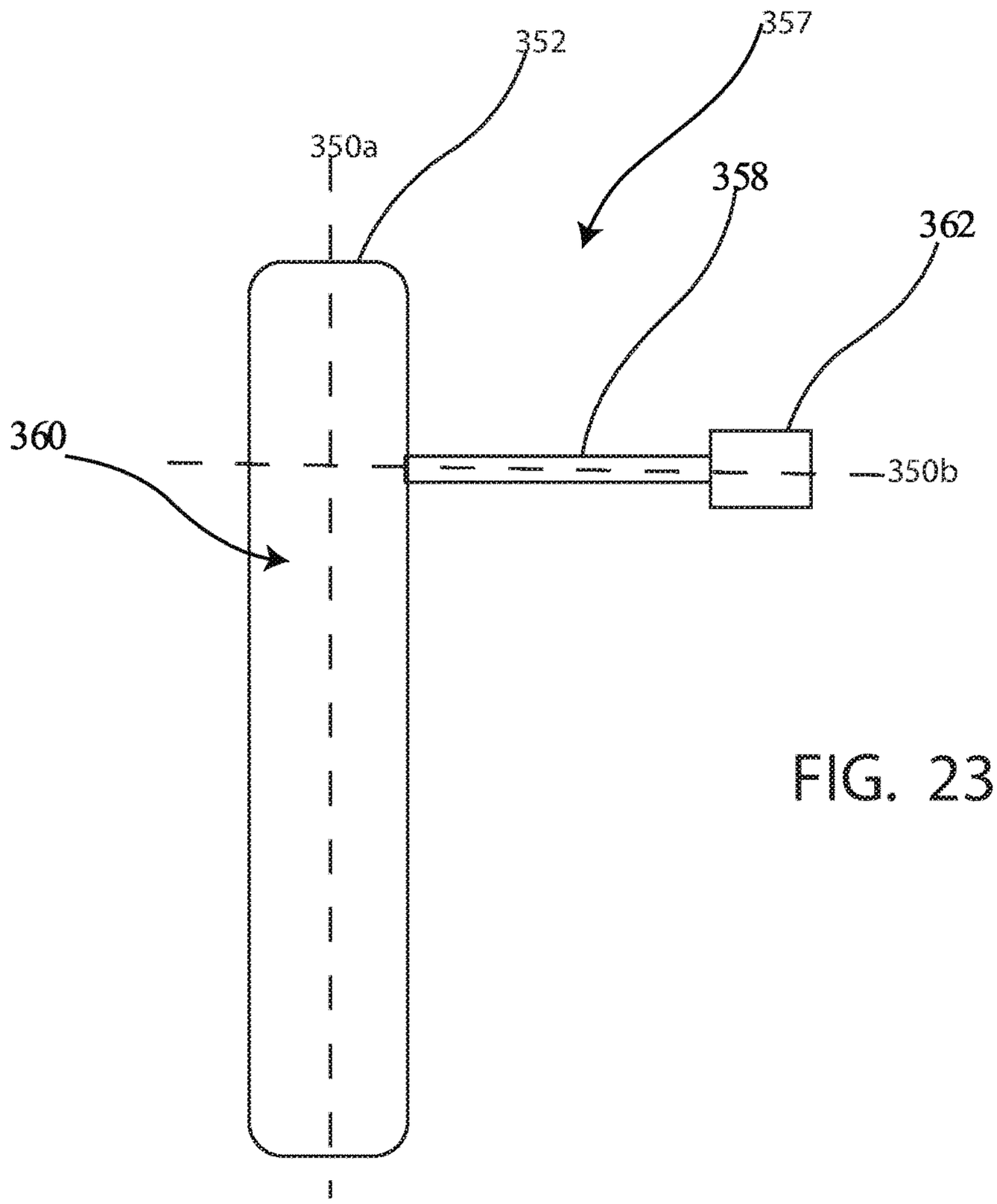

FIG. 23

FIG. 24A

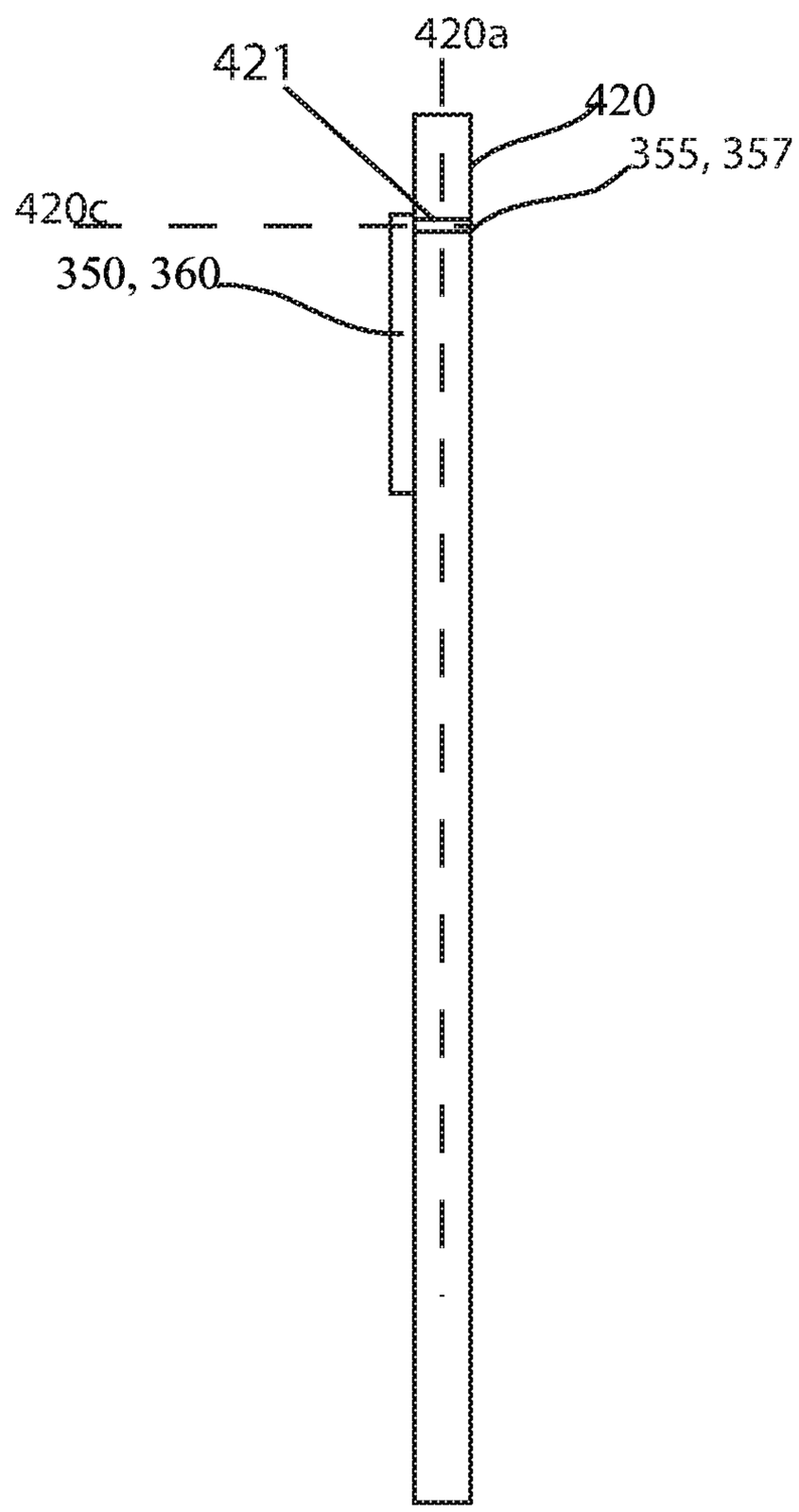

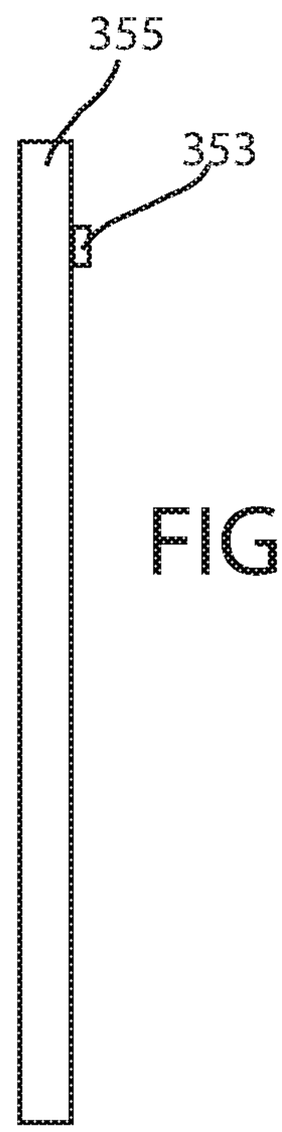

FIG. 24B

FIG. 25

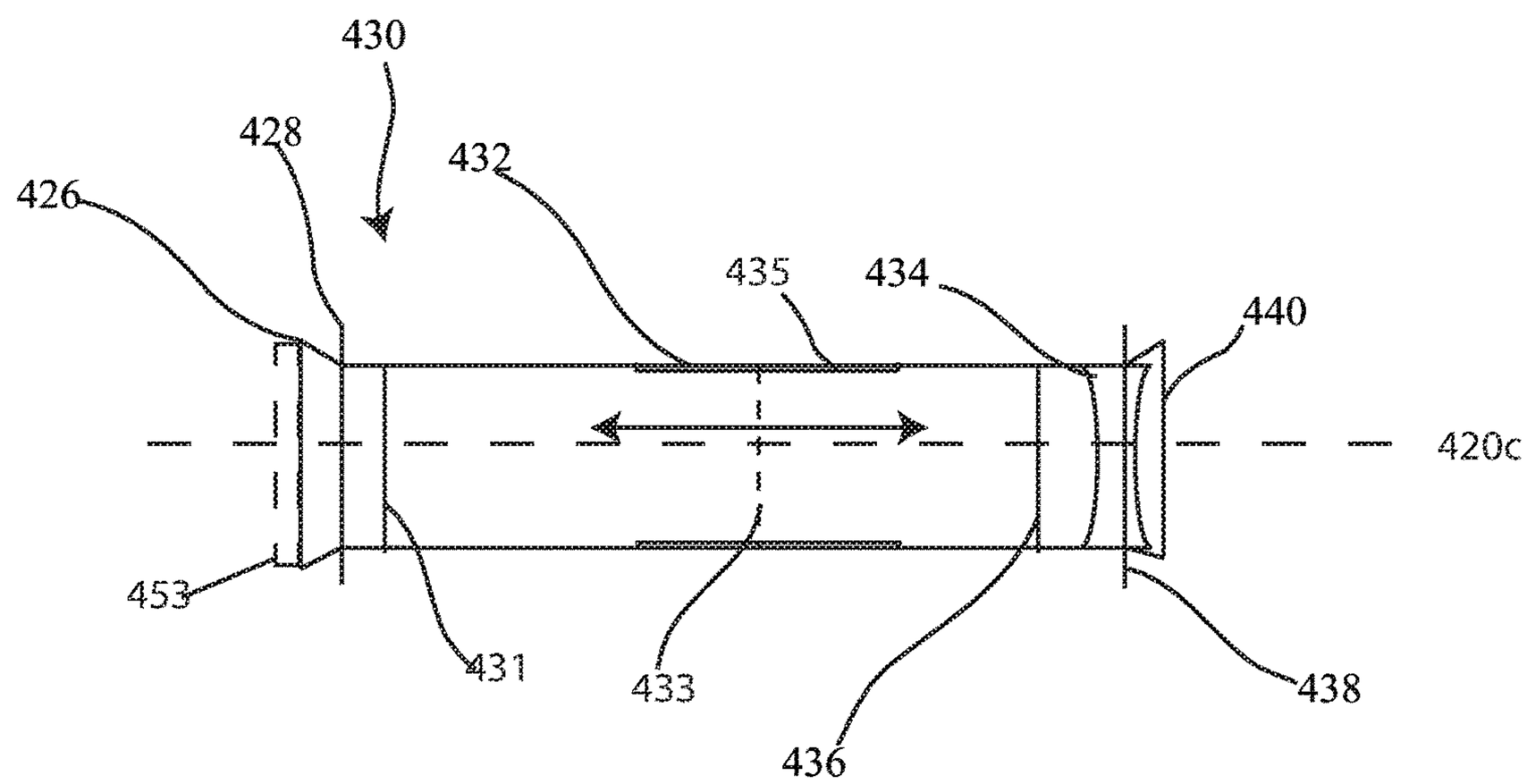

FIG. 26A

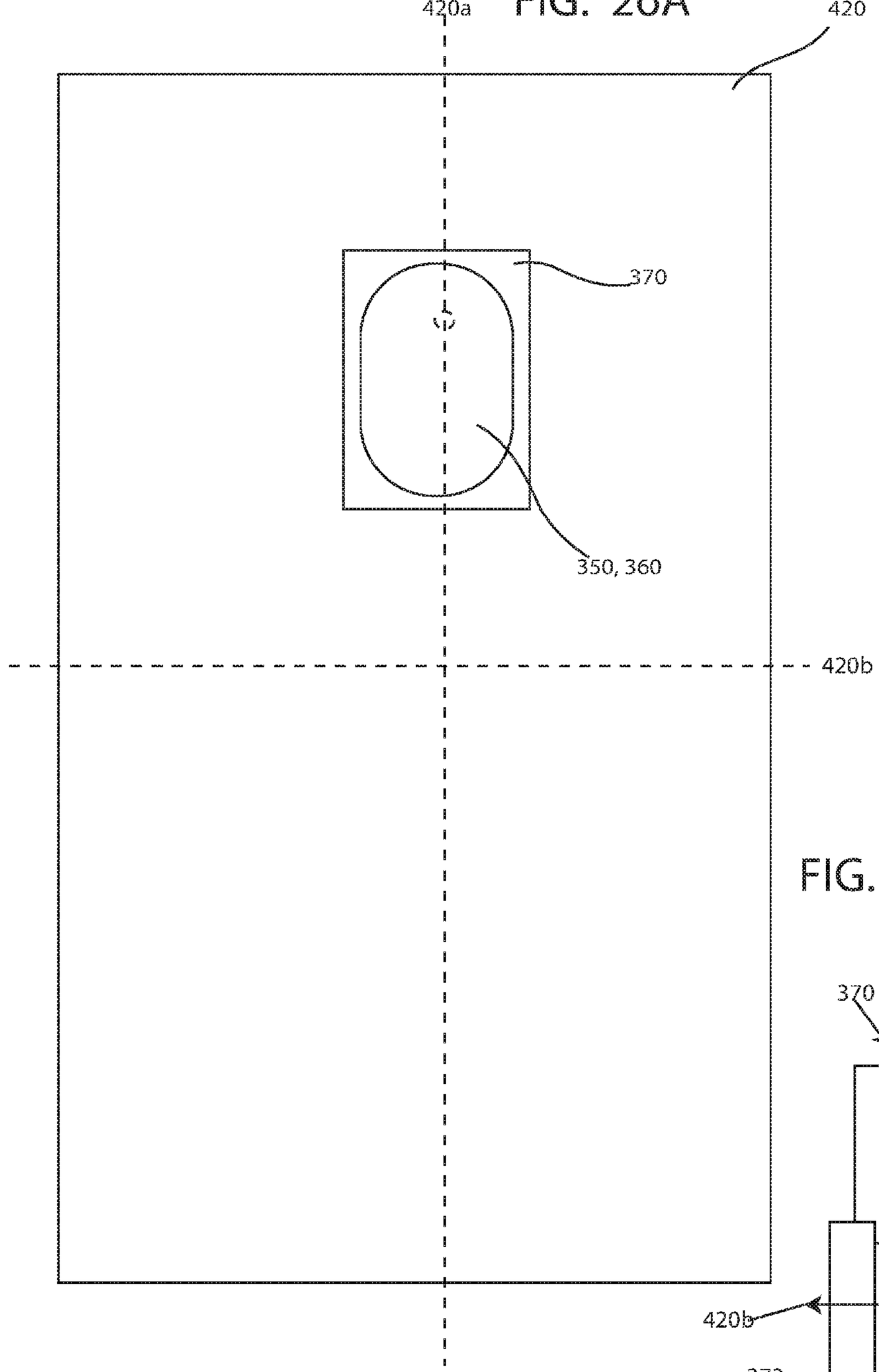

FIG. 26B

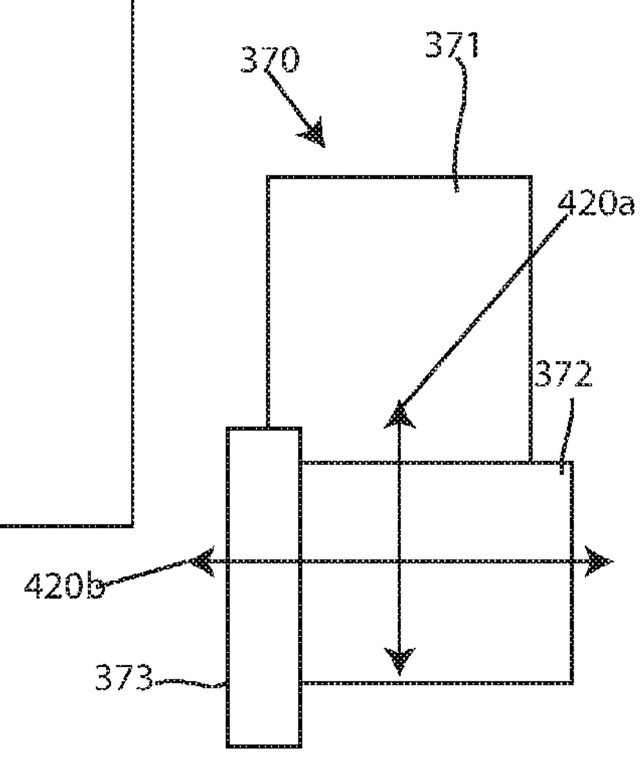

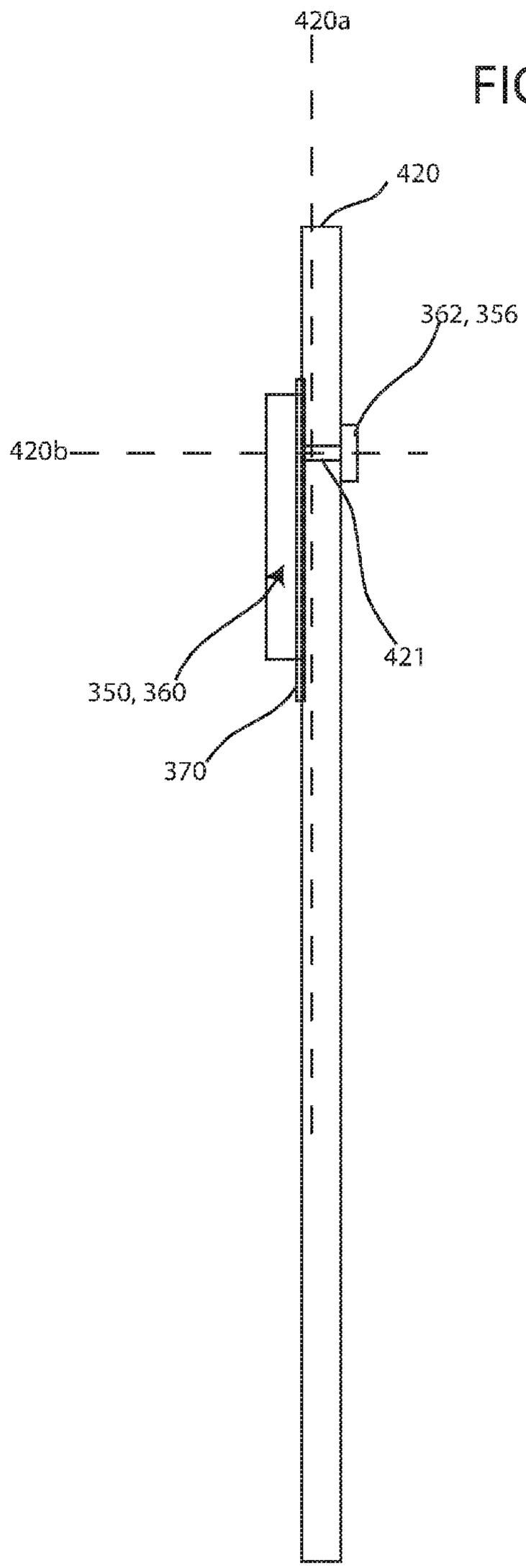

FIG. 27A

FIG. 27B

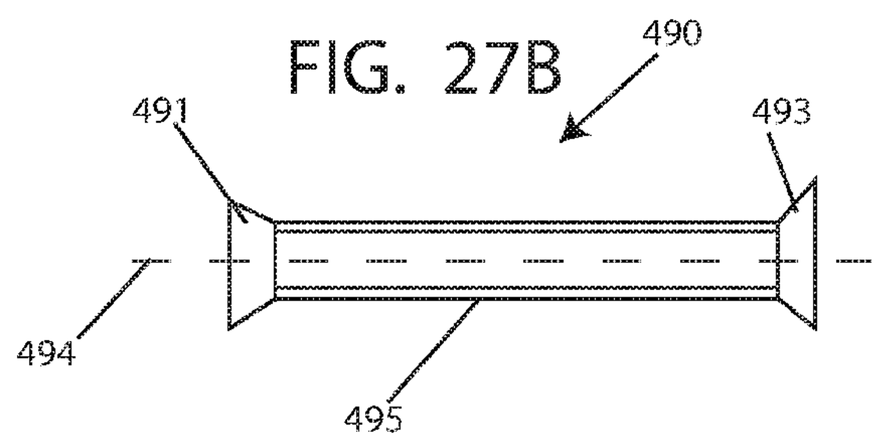

FIG. 28

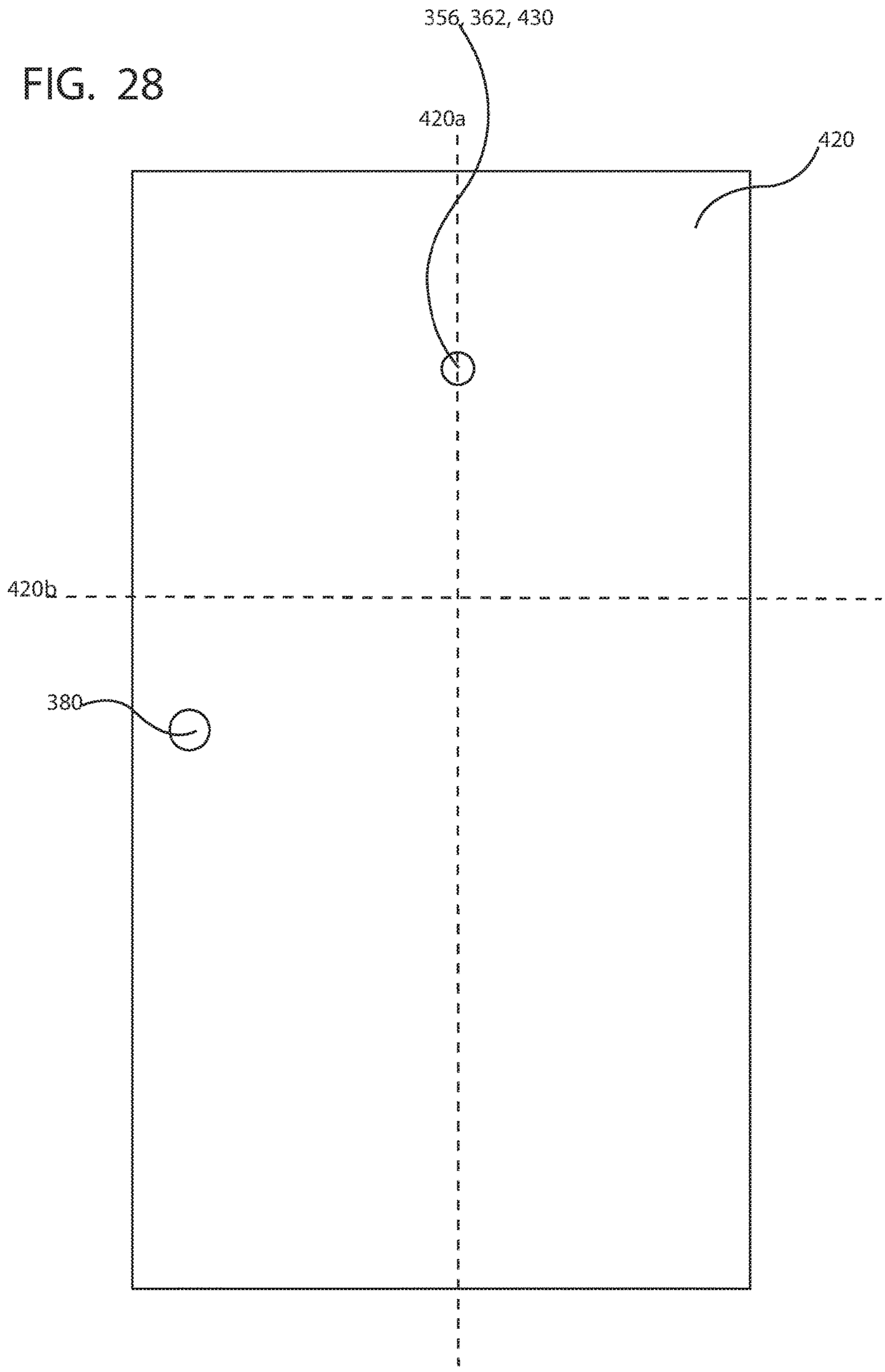

FIG. 29

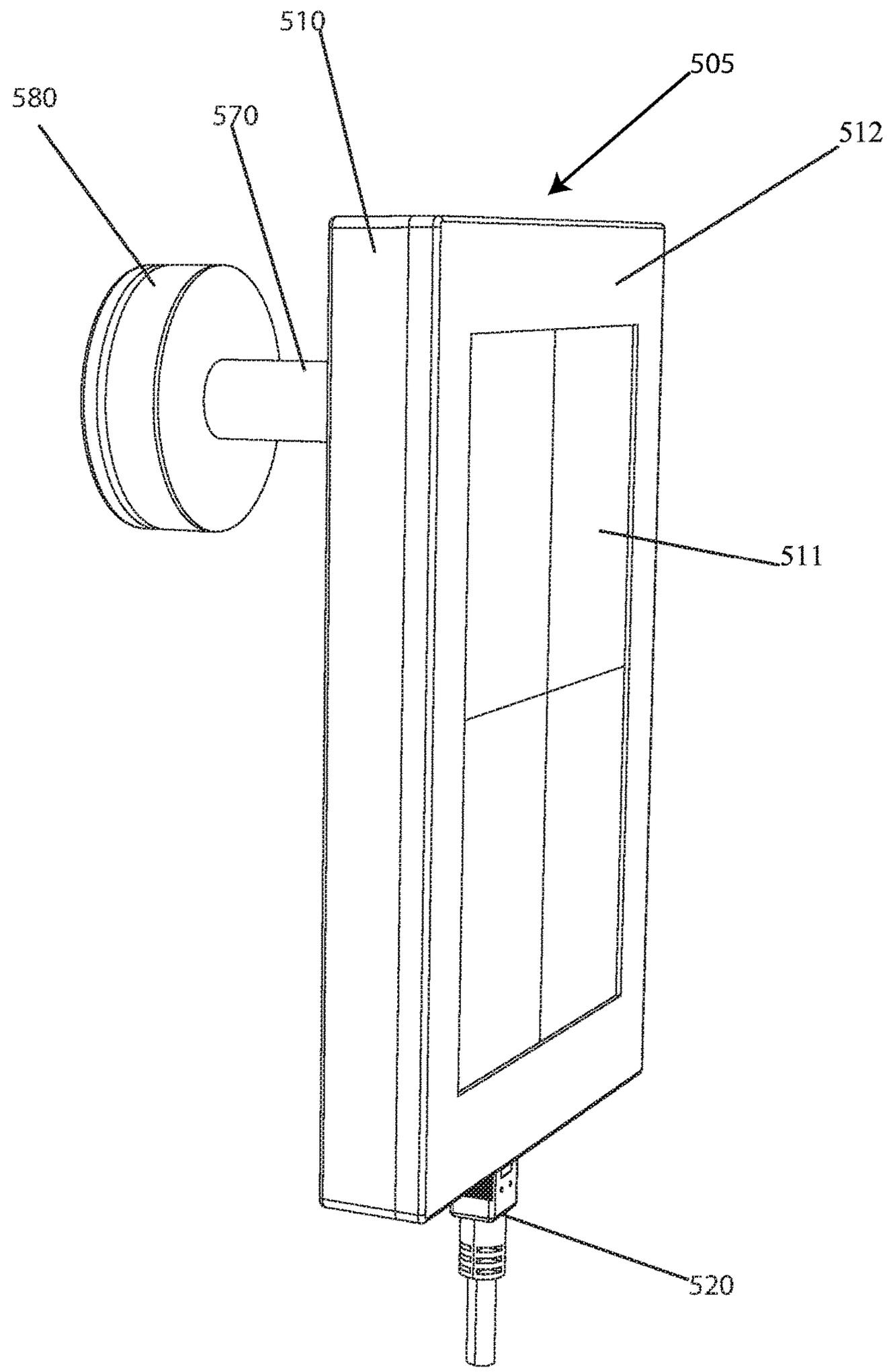

FIG. 30

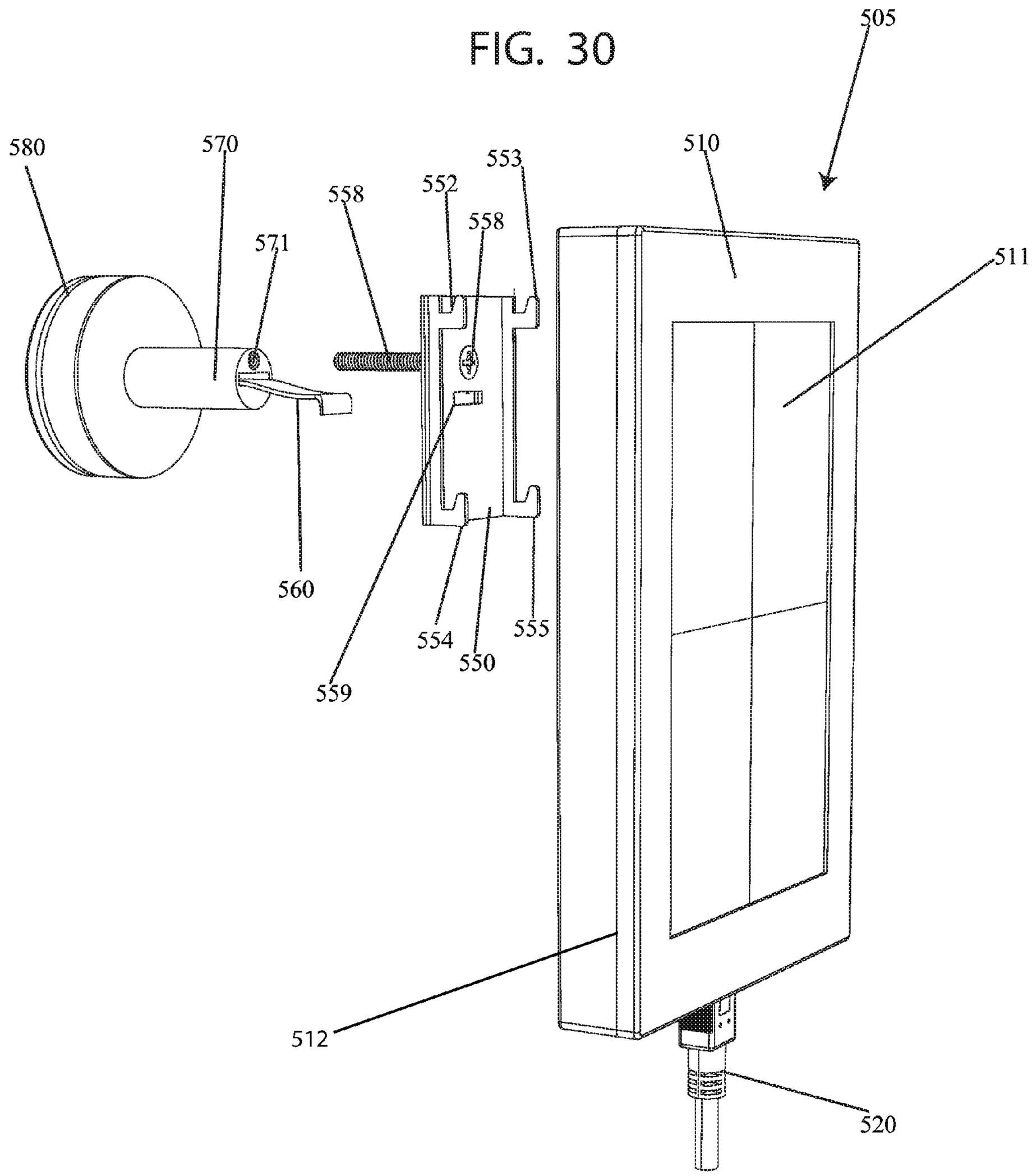
505
580
570
553
510
558
552
558
571
511
560
554
550
555
559
512
520

FIG. 31

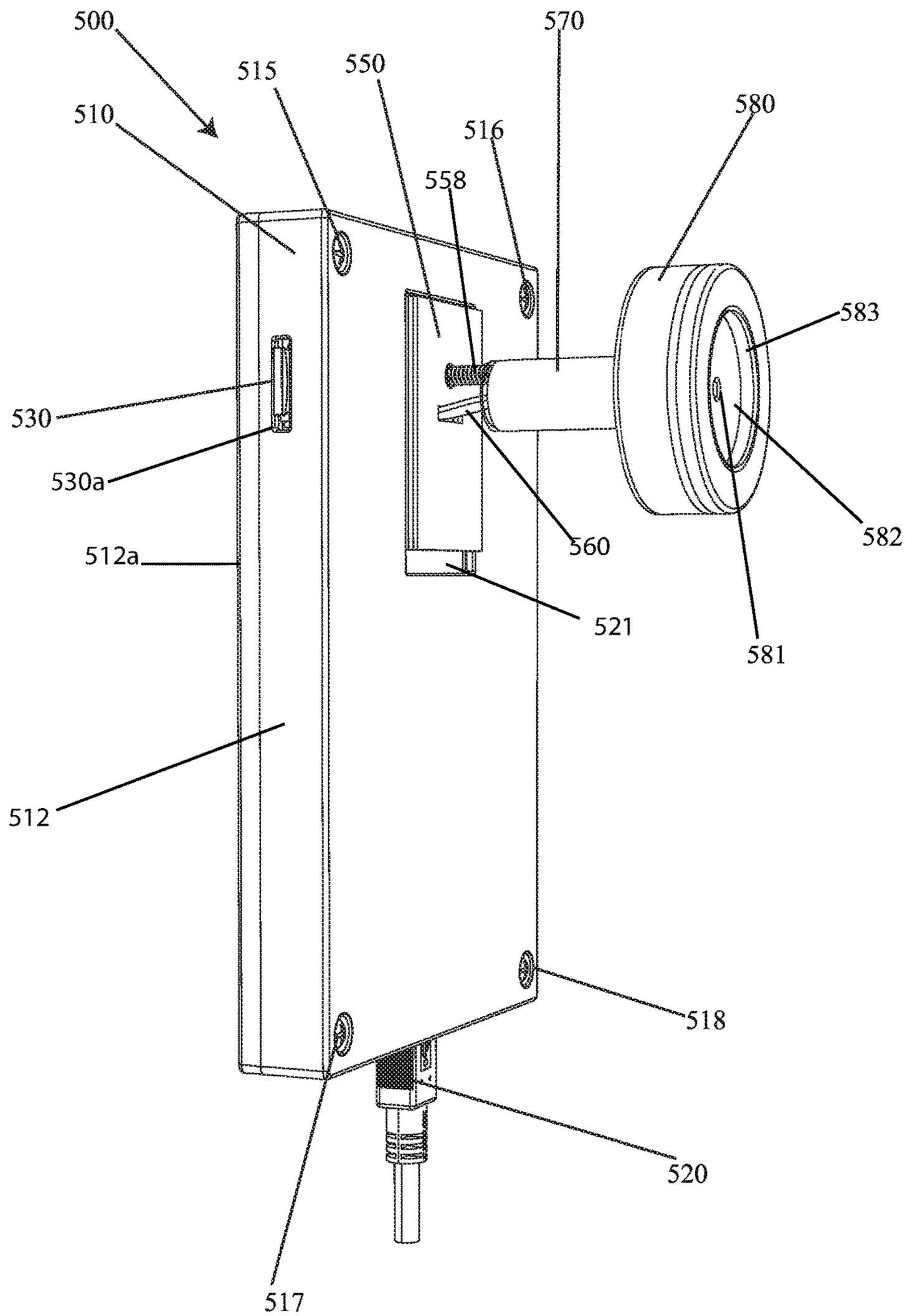
500
510
515
550
570
580
516
558
583
530
530a
560
582
512a
521
581
512
518
520
517

FIG. 32

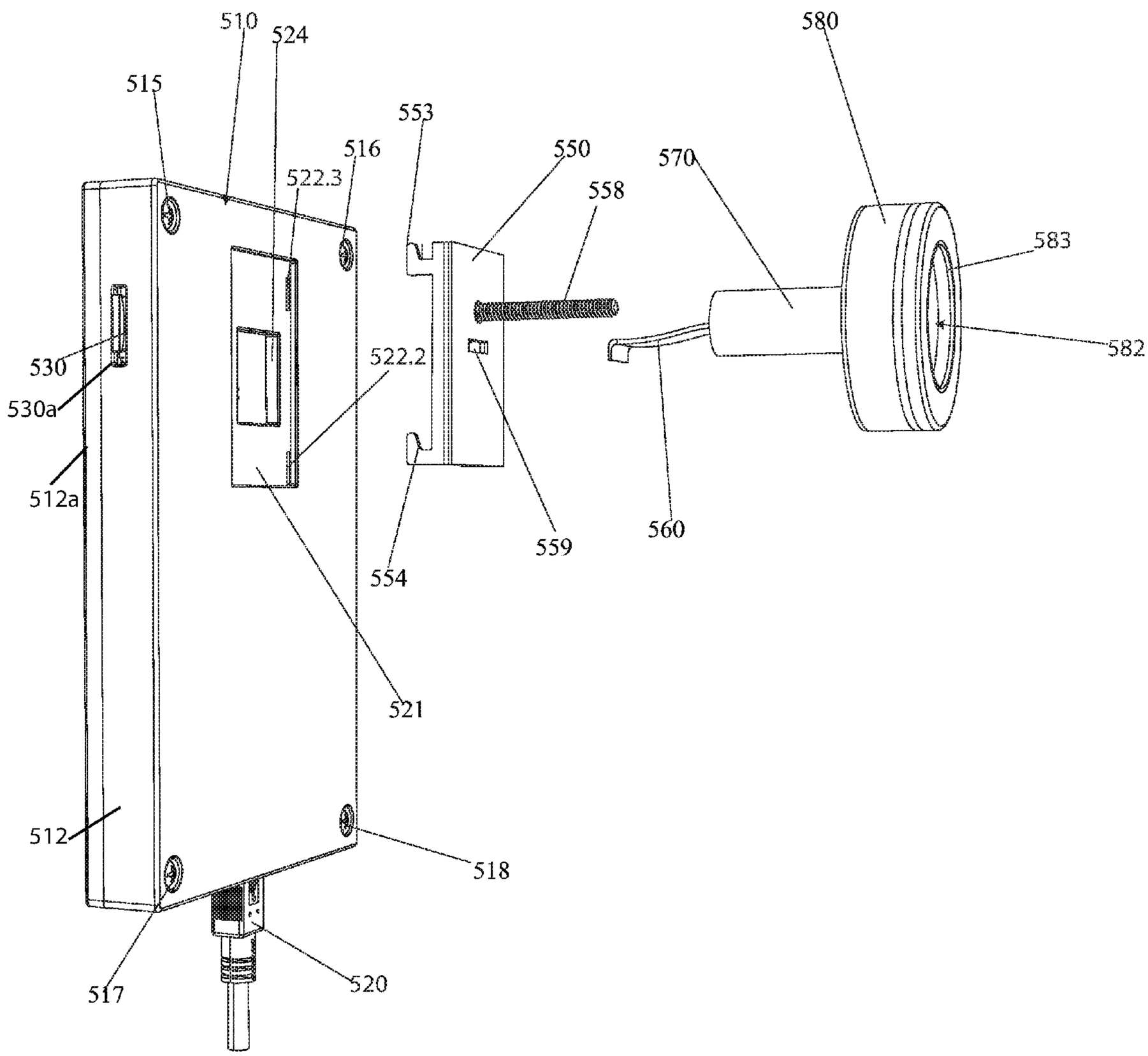
510
524
515
553
516
550
522.3
558
570
580
583
582
530
530a
522.2
512a
559
560
554
521
512
518
517
520

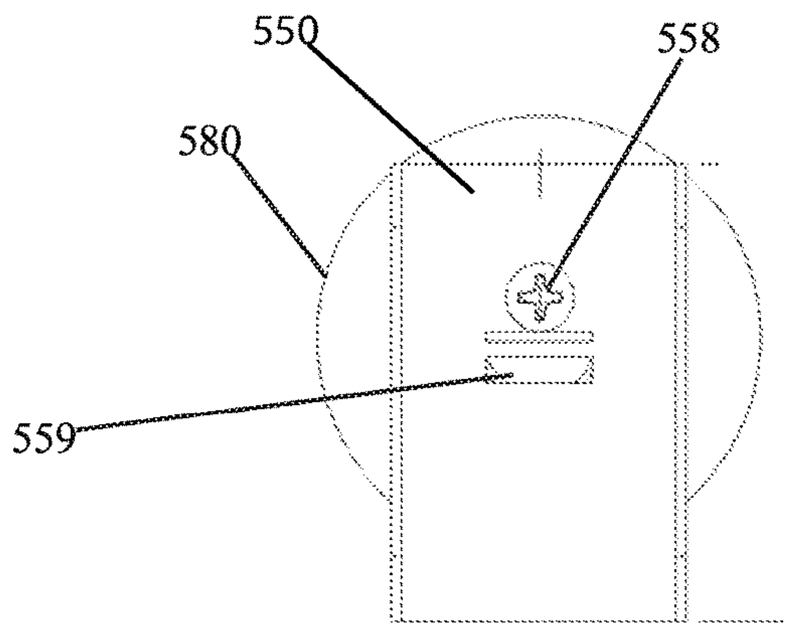

FIG. 33A

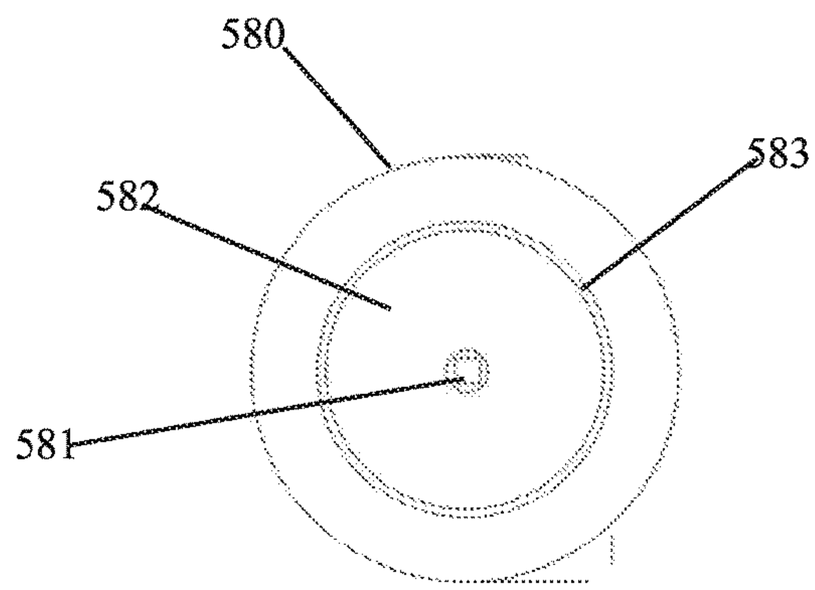

FIG. 33B

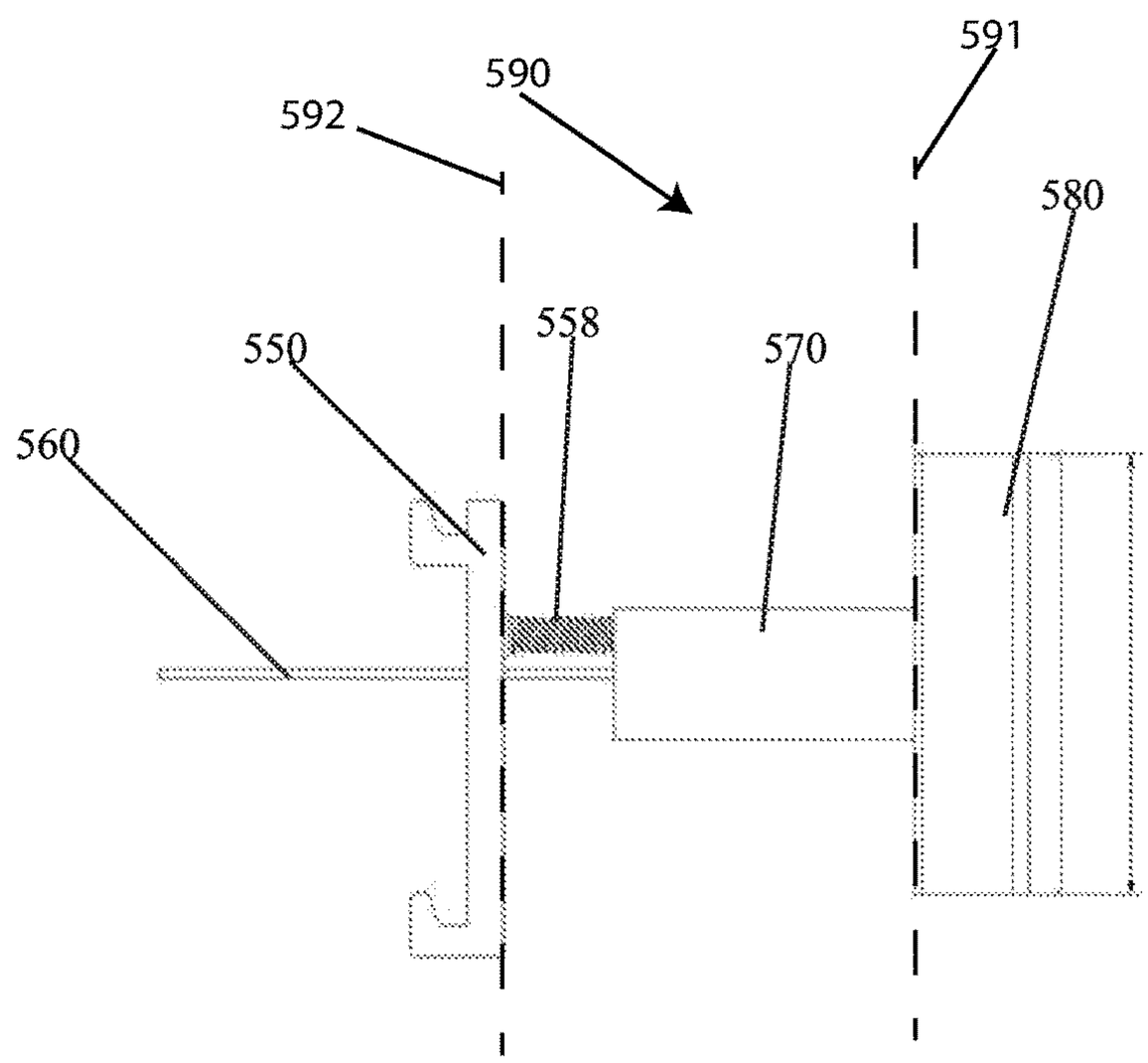

FIG. 33C

FIG. 34

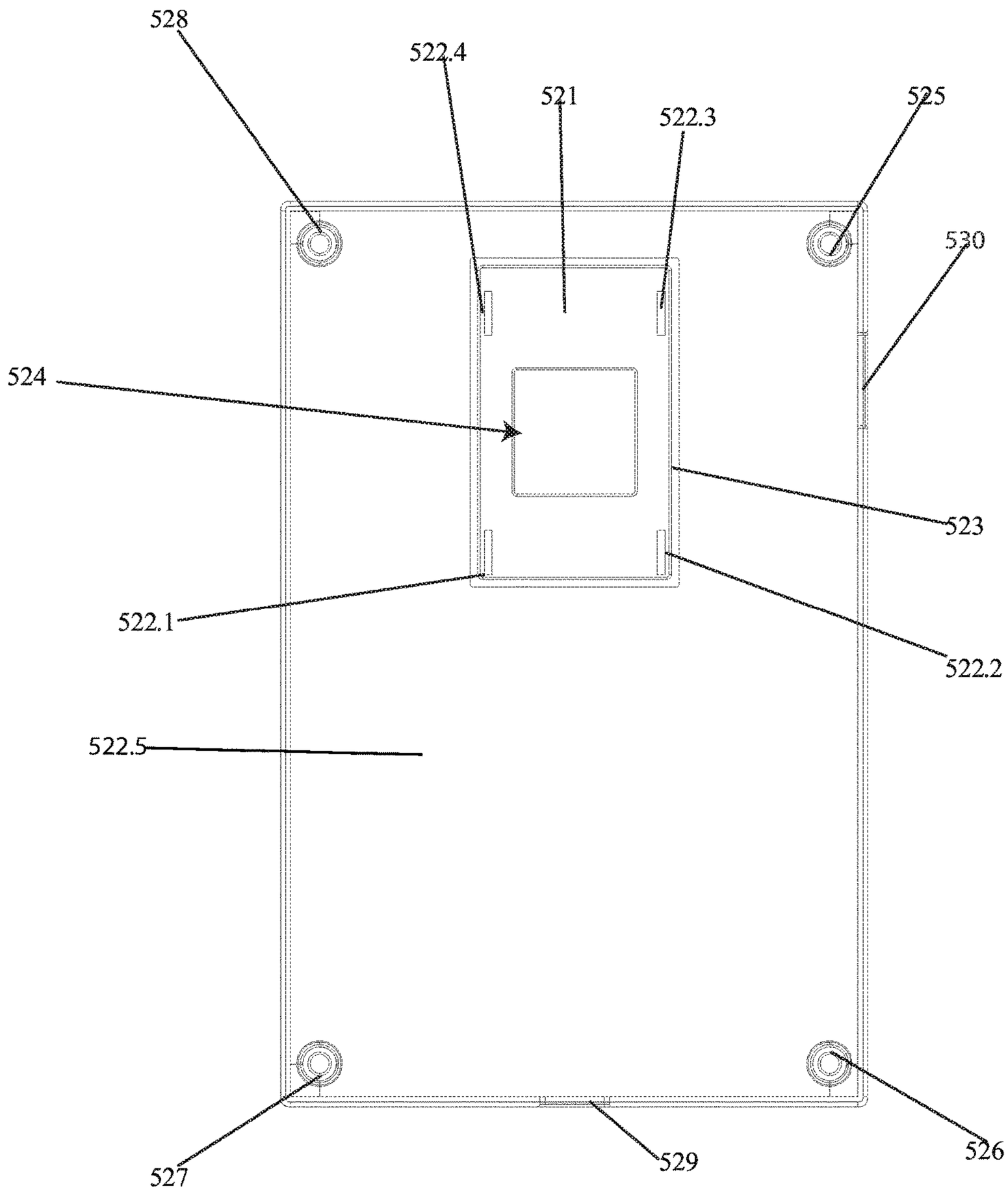

FIG. 35

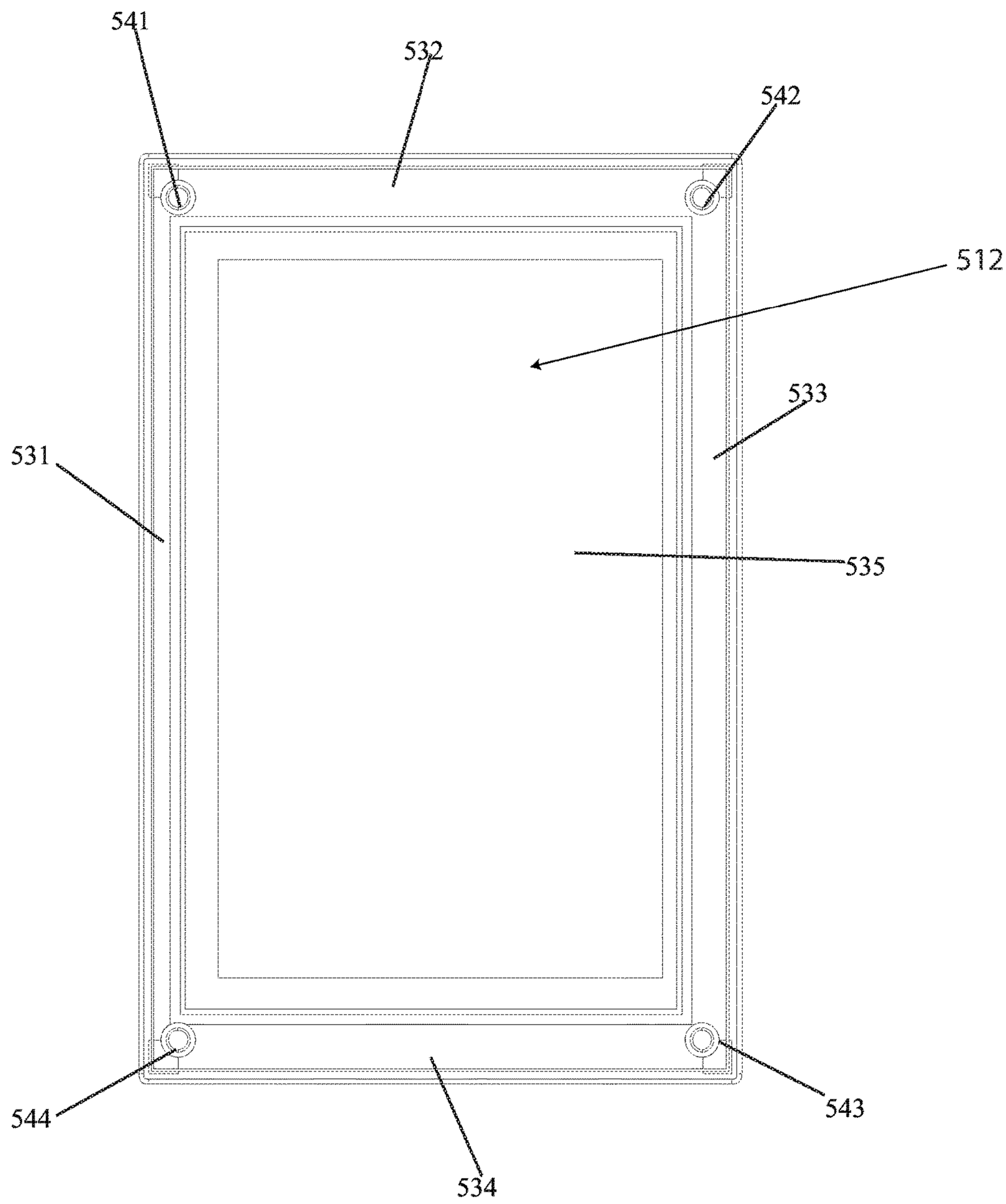

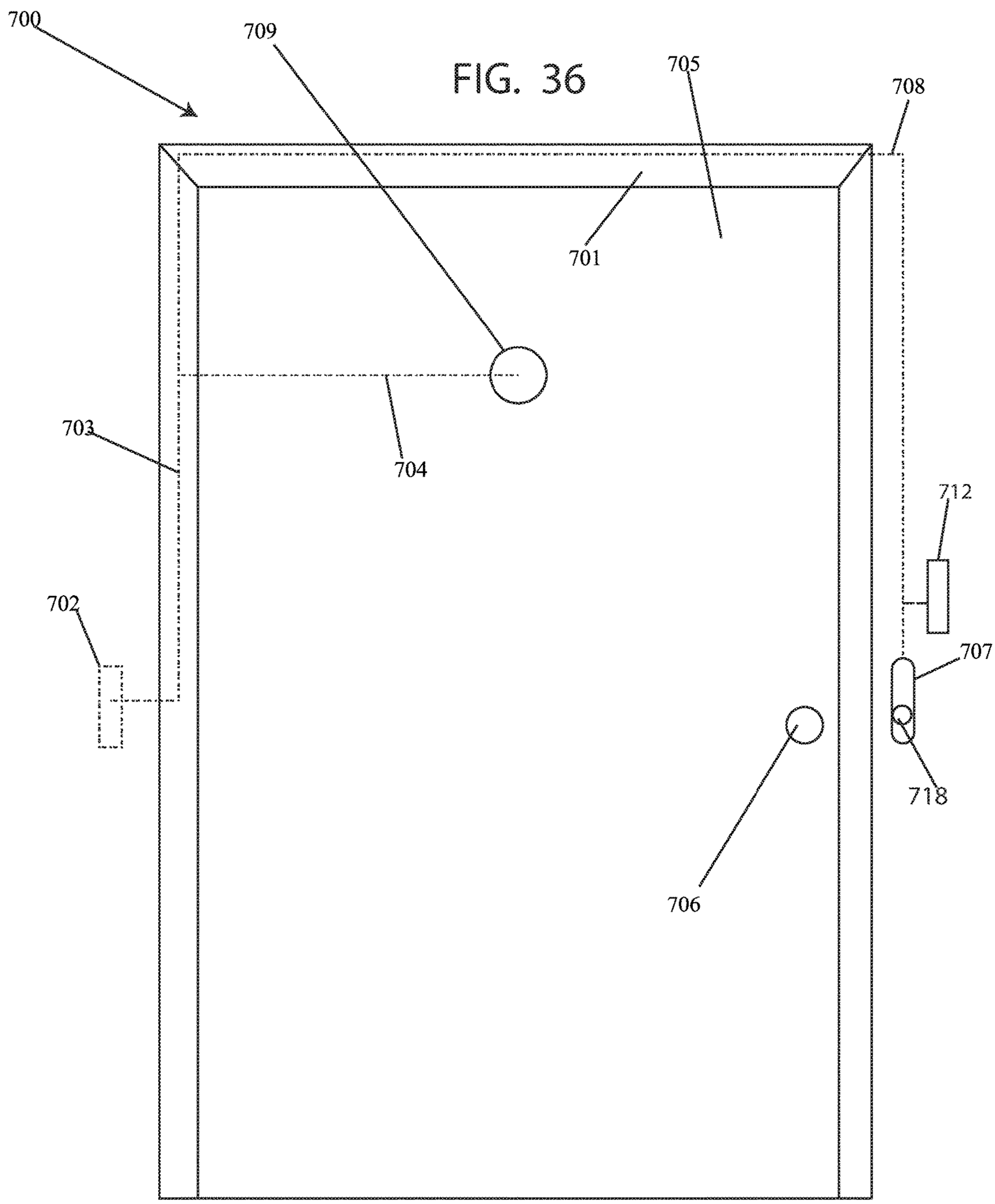

FIG. 36

FIG. 37

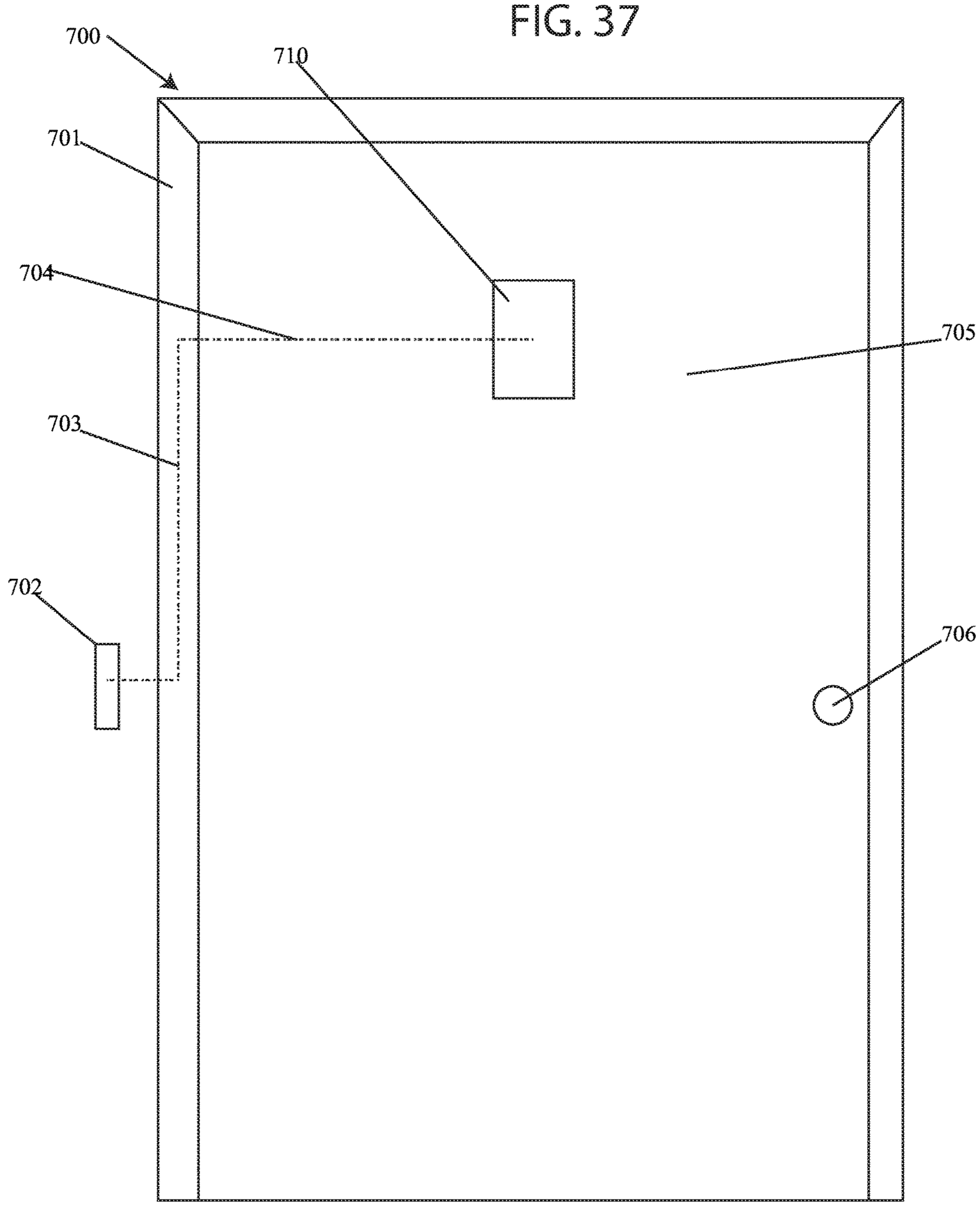

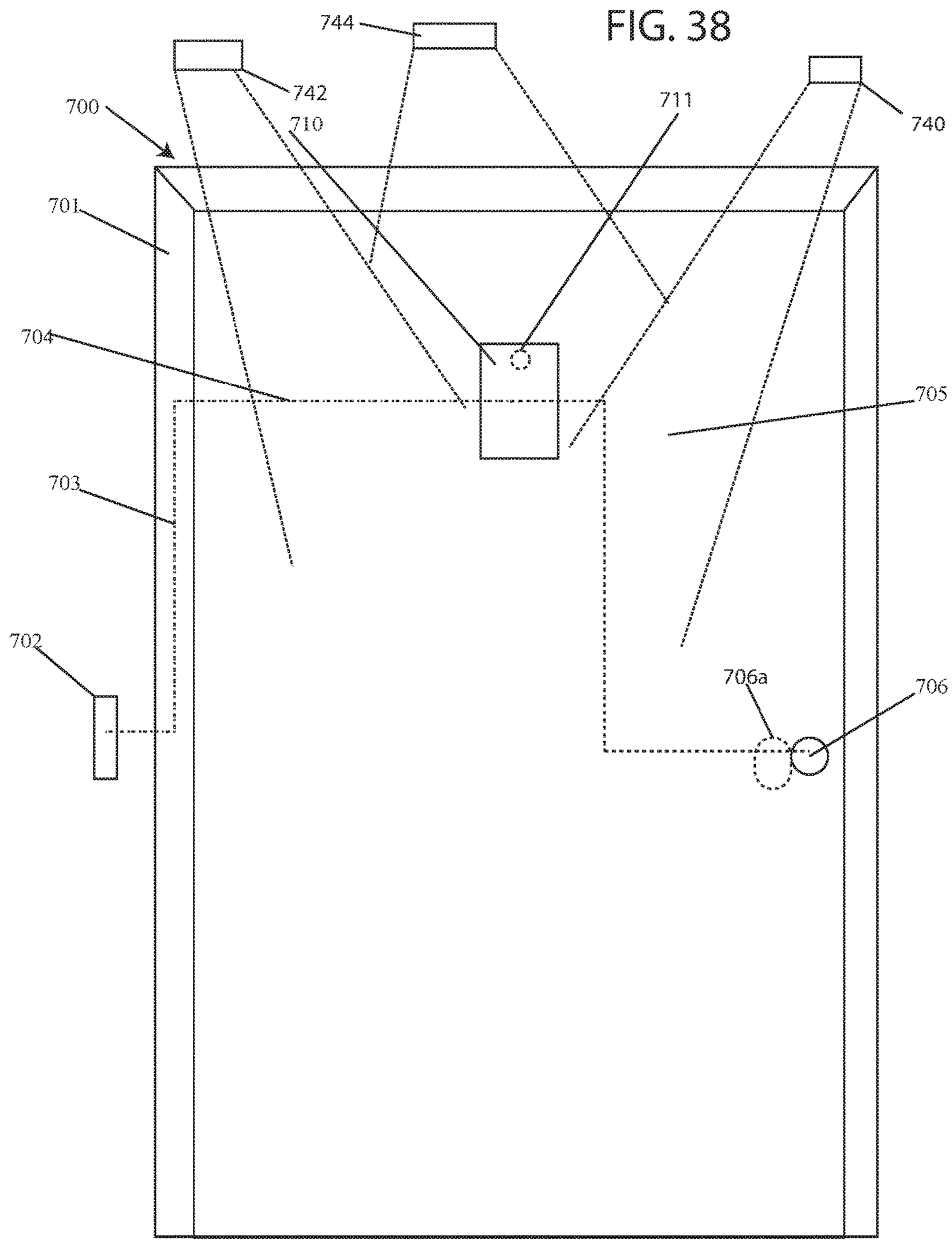
FIG. 38
744
742
700
710
711
740
701
704
705
703
702
706a
706

FIG. 39

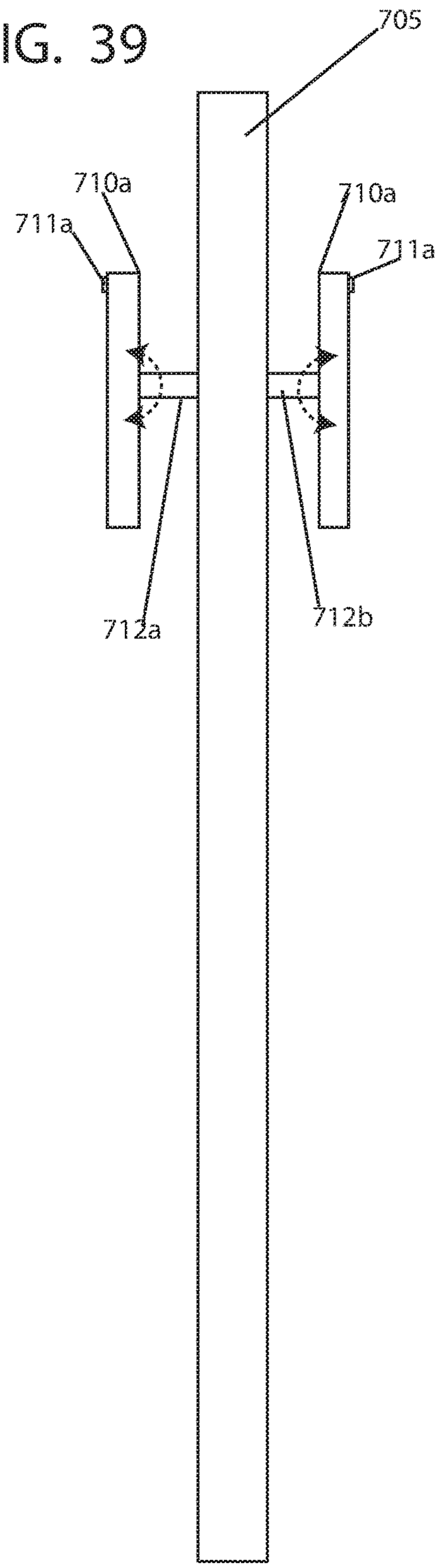

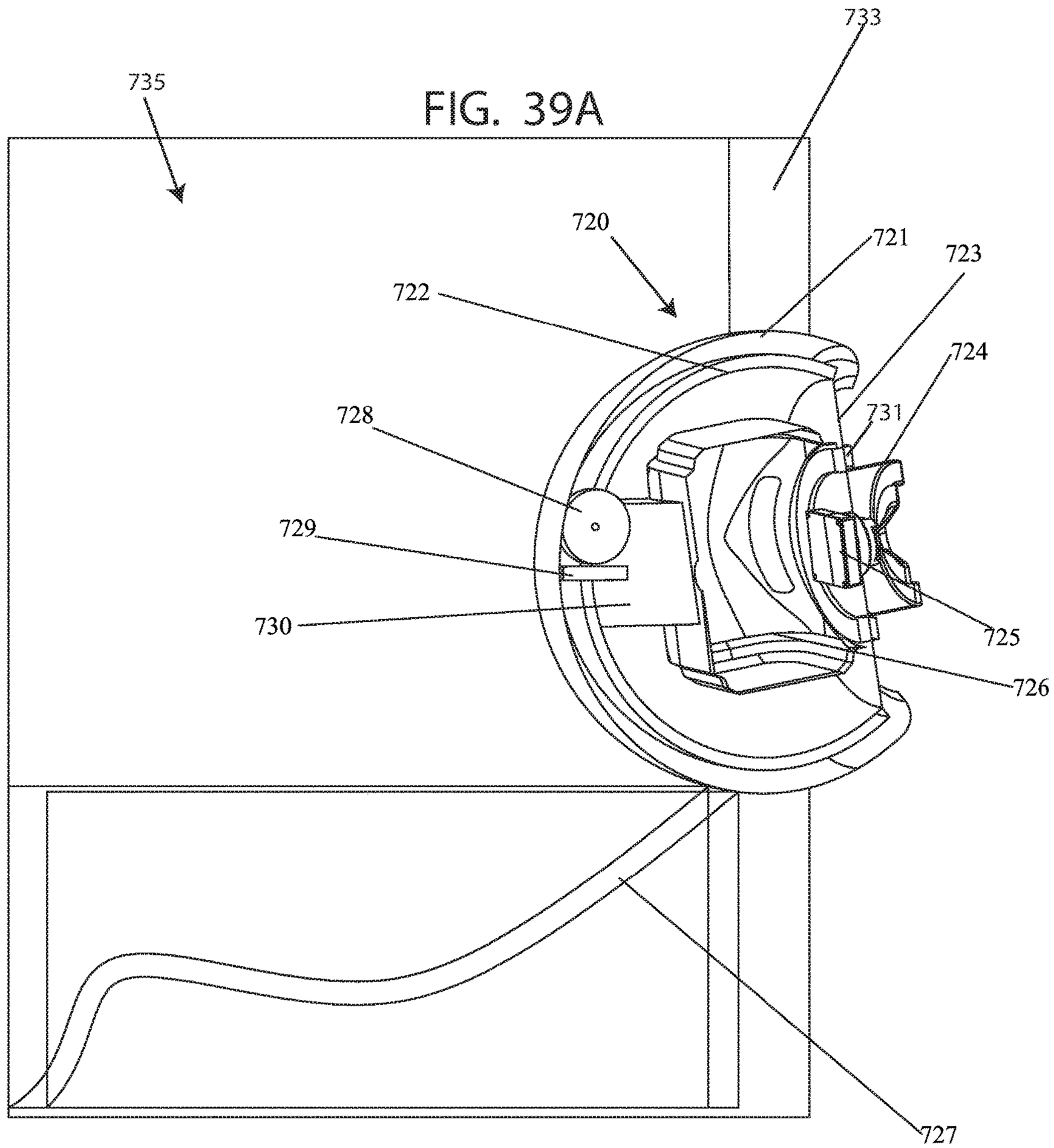
FIG. 39A
733
735
720
721
723
722
724
728
731
729
730
725
726
727

FIG. 39B

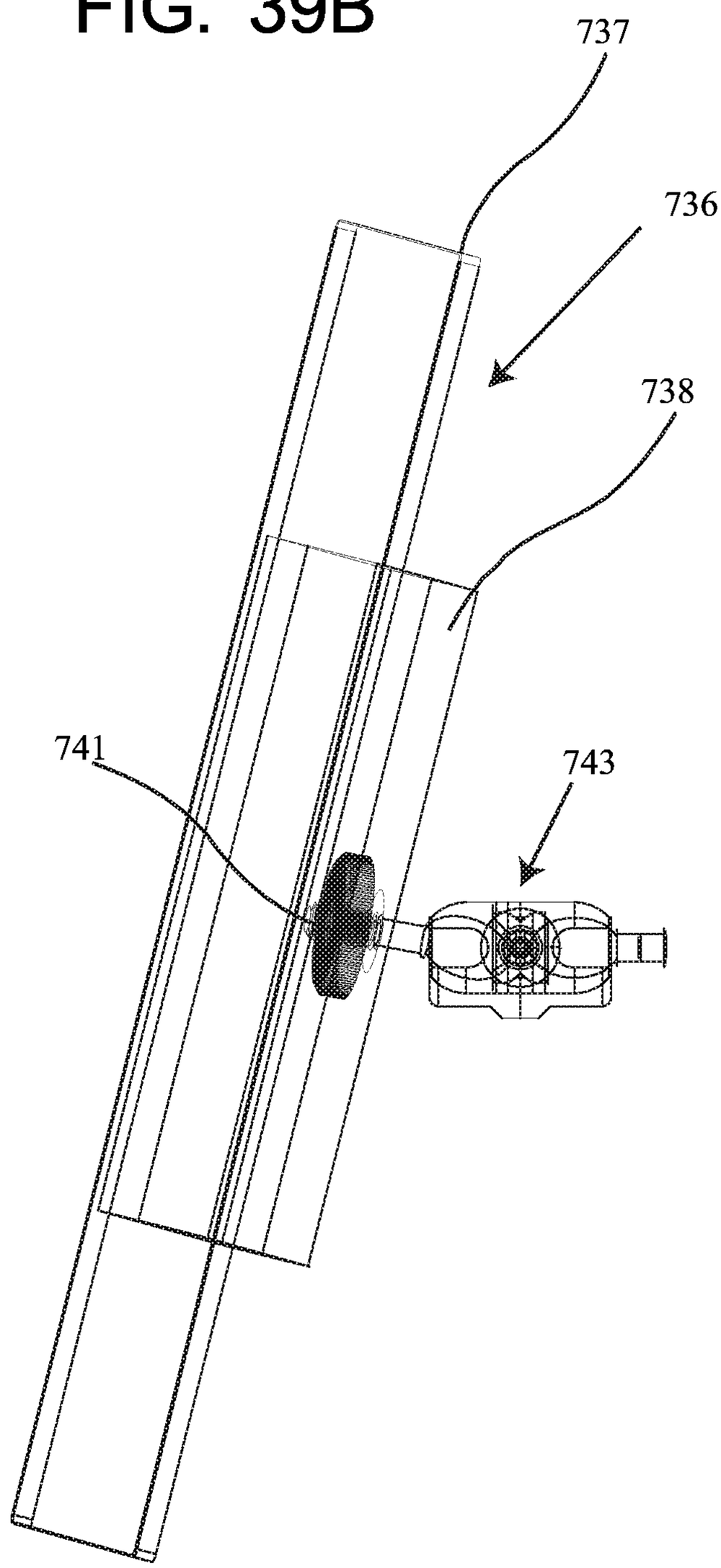

FIG. 39C

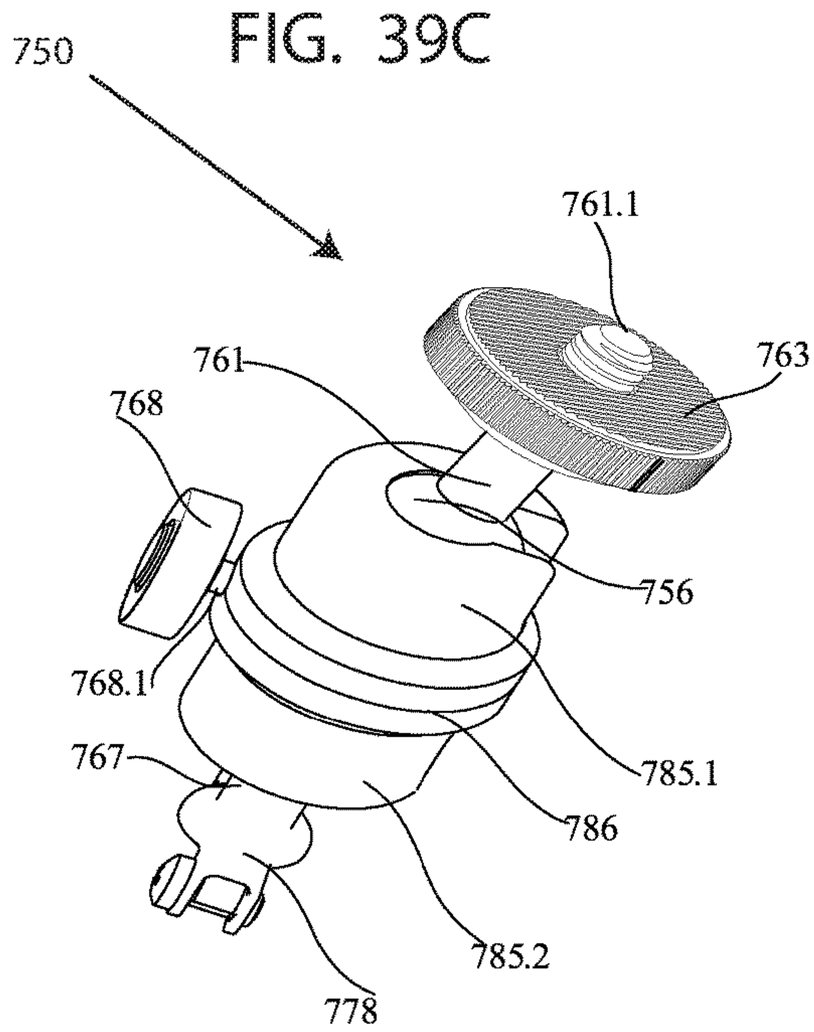

FIG. 39D

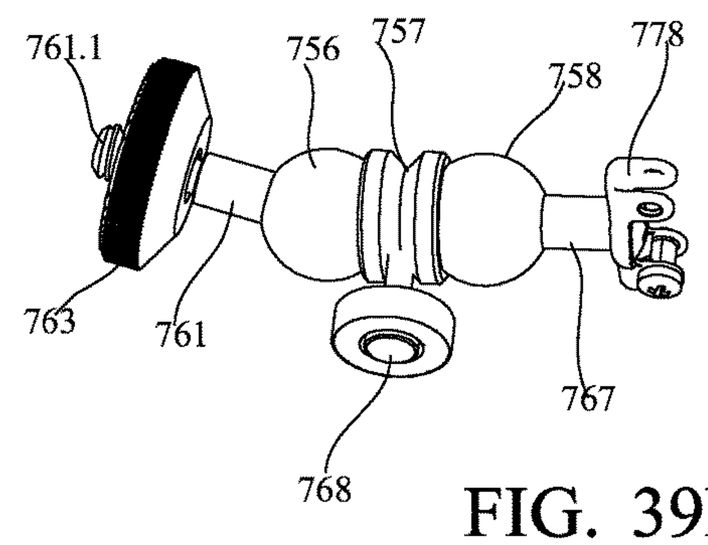

FIG. 39E

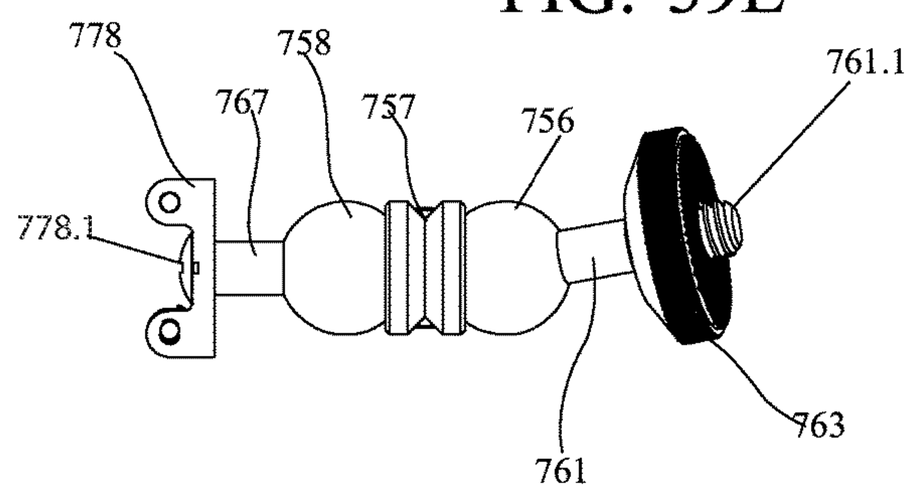

FIG. 39F

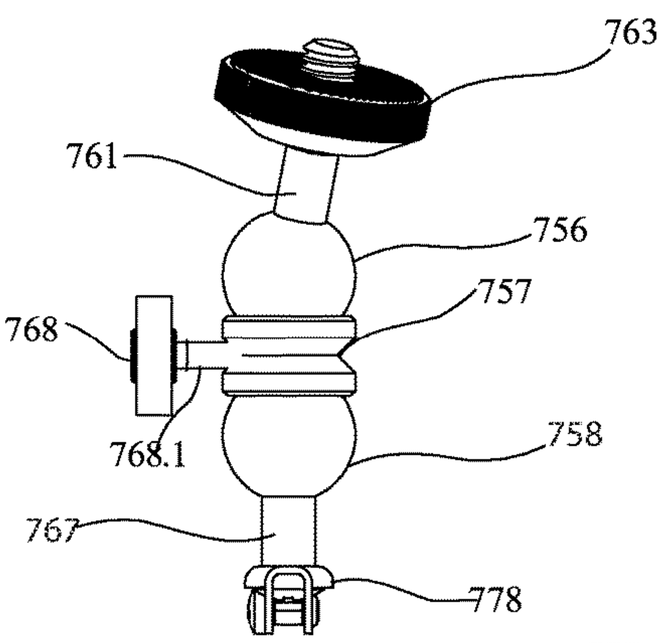

FIG. 39G

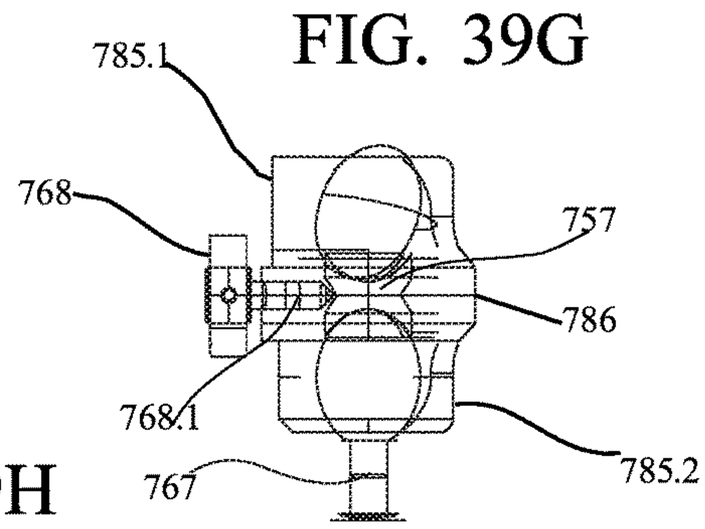

FIG. 39H

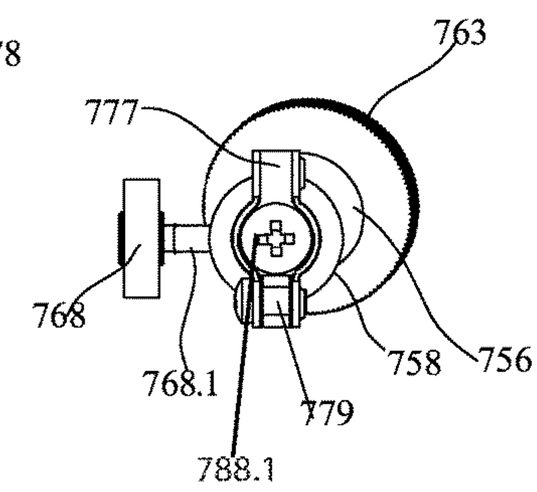

FIG. 40

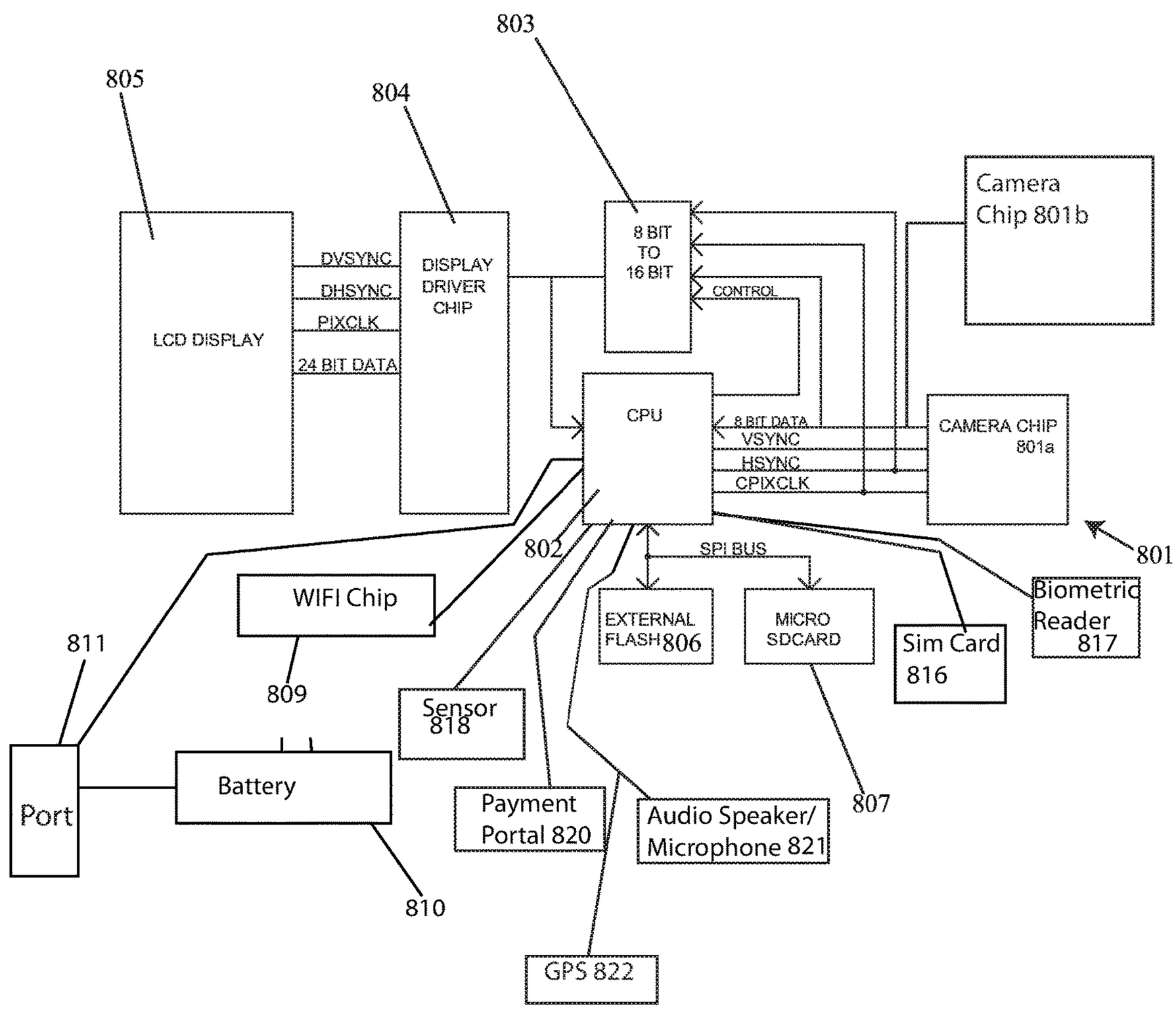
803
805
804
LCD DISPLAY
DVSYNC
DHSYNC
PIXCLK
24 BIT DATA
DISPLAY DRIVER CHIP
8 BIT TO 16 BIT
CONTROL
Camera Chip 801b
CPU
8 BIT DATA
VSYNC
HSYNC
CPIXCLK
CAMERA CHIP 801a
801
802
SPI BUS
WIFI Chip
EXTERNAL FLASH 806
MICRO SDCARD
Sim Card 816
Biometric Reader 817
811
809
Sensor 818
Port
Battery
Payment Portal 820
Audio Speaker/ Microphone 821
807
810
GPS 822

FIG. 40A

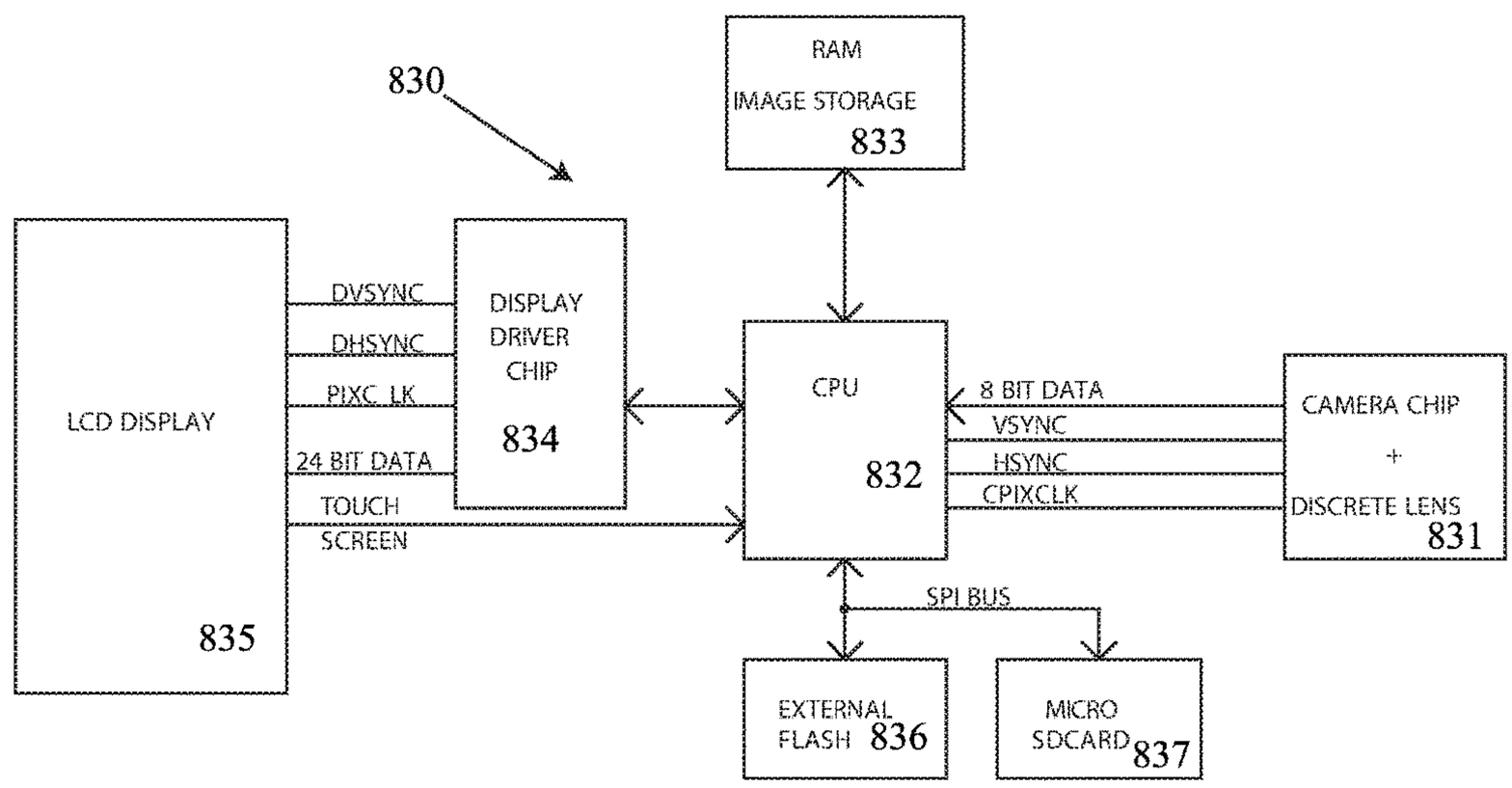

FIG. 40B

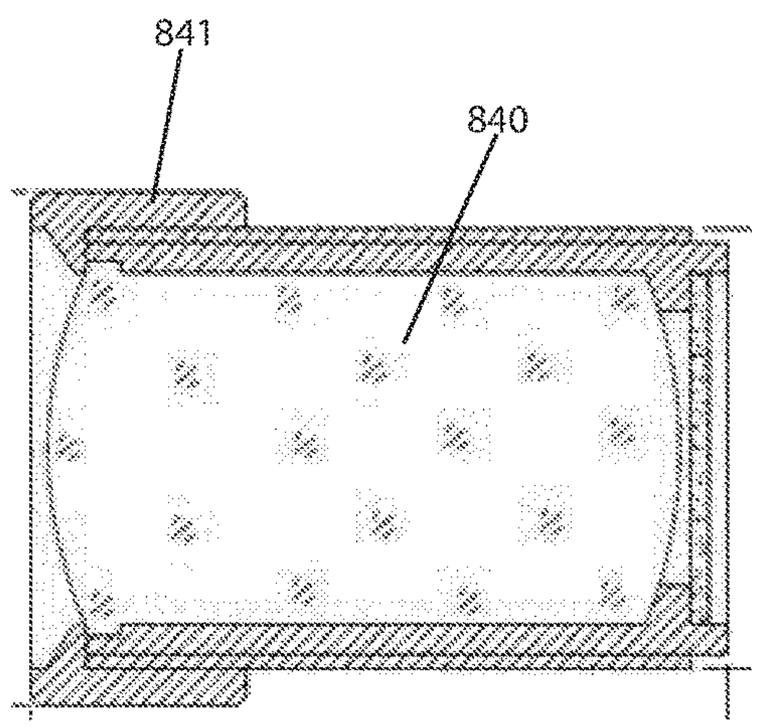

FIG. 41A

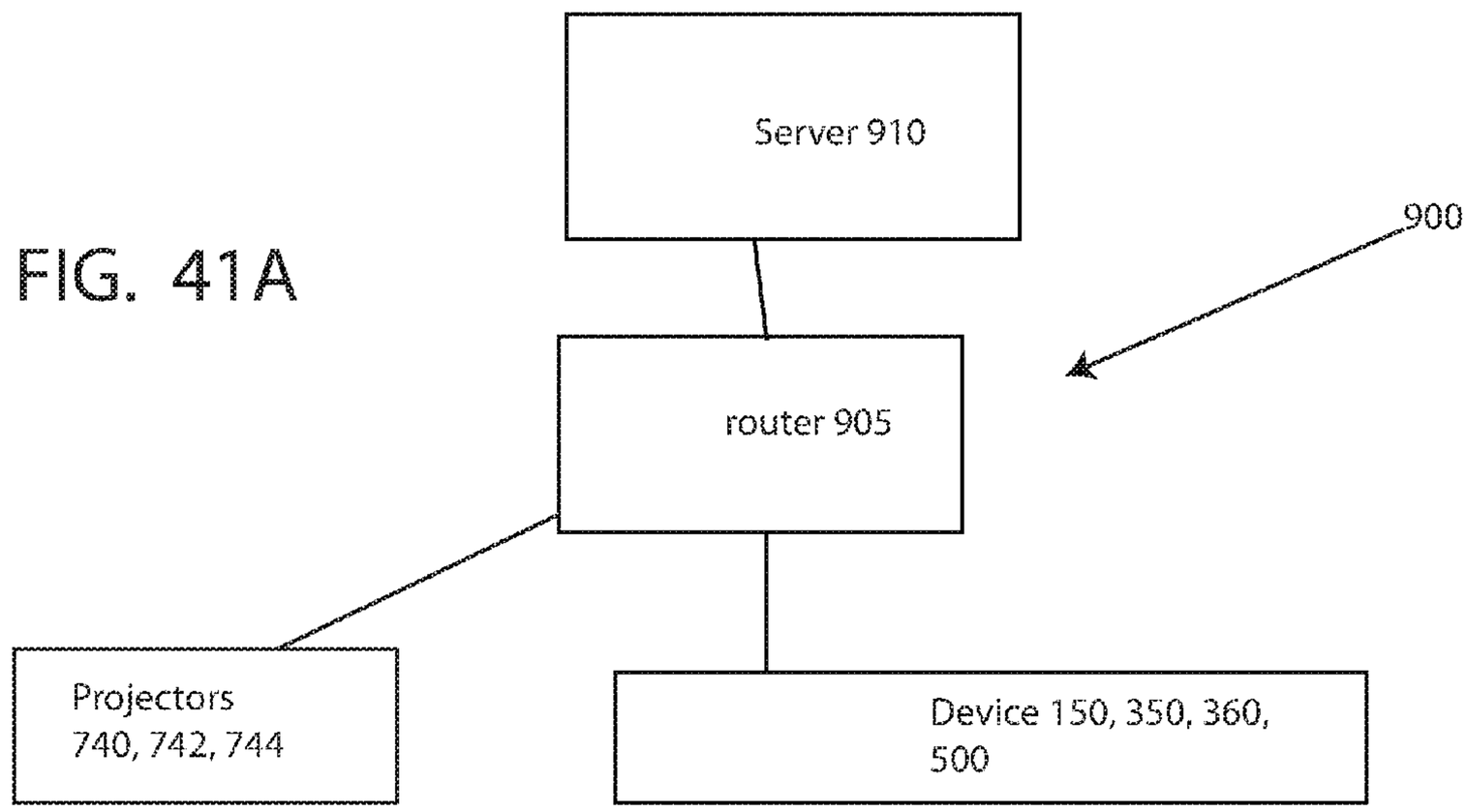

FIG. 41B

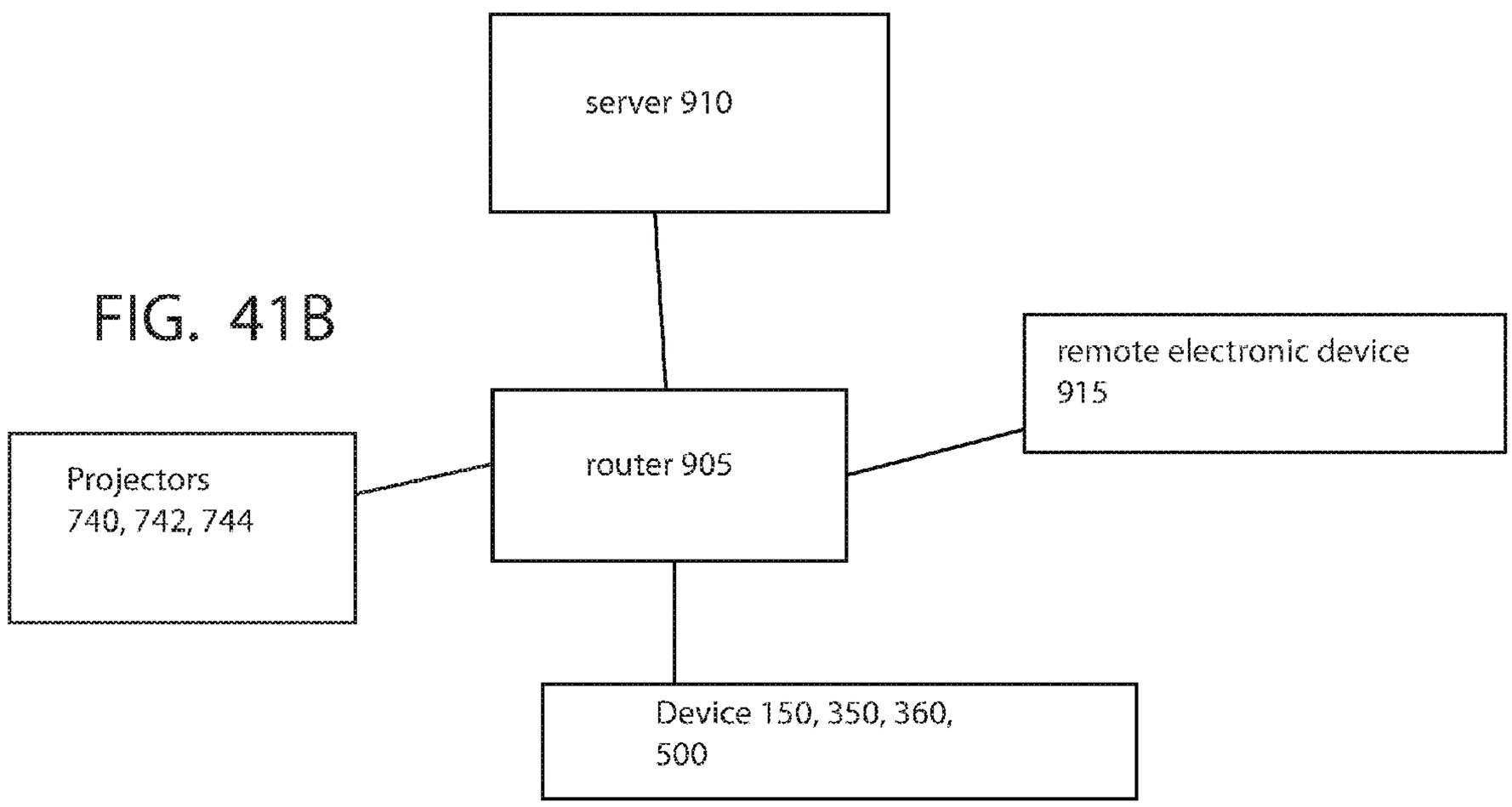

FIG. 42

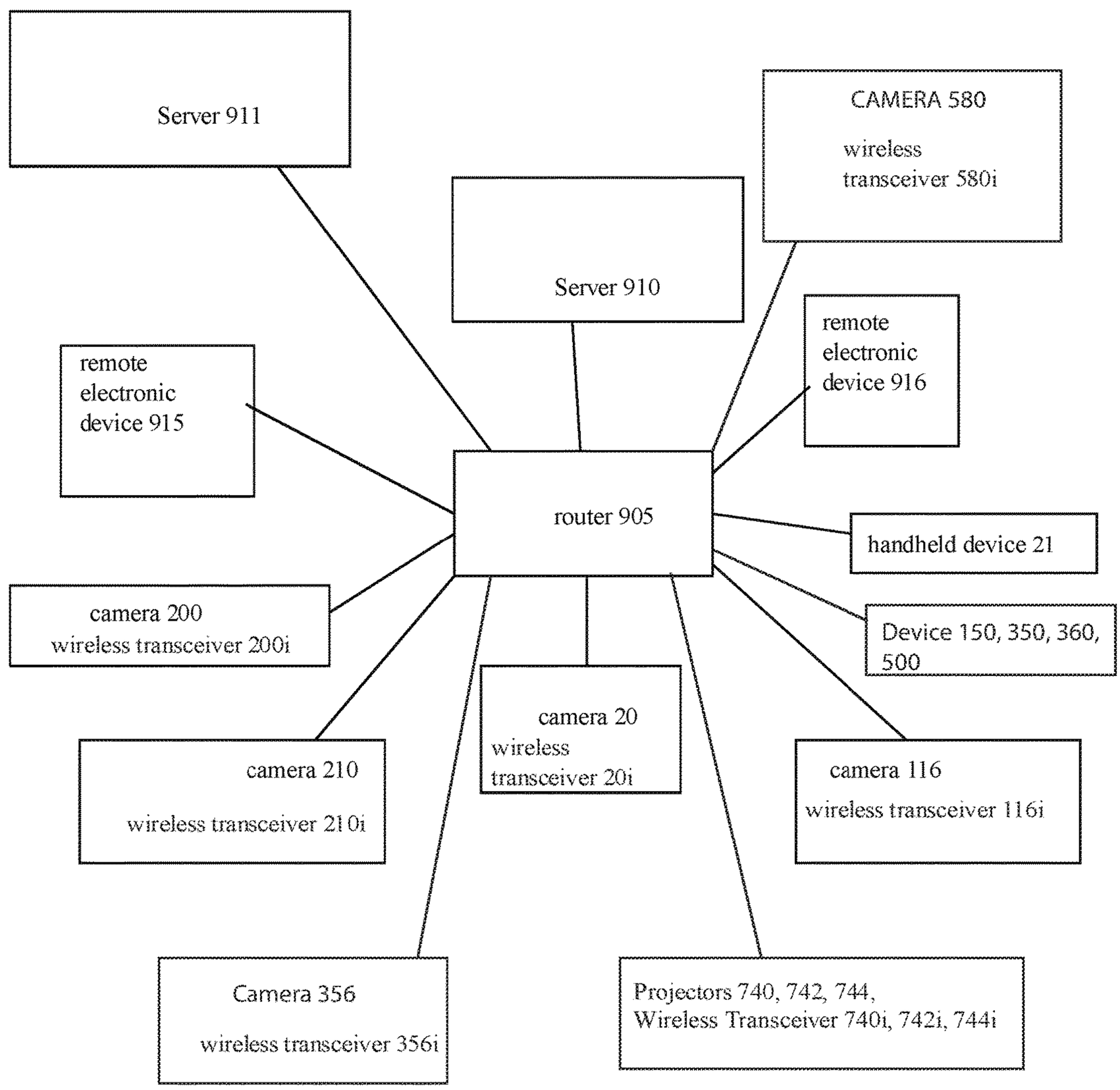
Server 911
CAMERA 580
wireless transceiver 580i
Server 910
remote electronic device 916
remote electronic device 915
router 905
handheld device 21
camera 200
wireless transceiver 200i
Device 150, 350, 360, 500
camera 20
wireless transceiver 20i
camera 210
wireless transceiver 210i
camera 116
wireless transceiver 116i
Camera 356
wireless transceiver 356i
Projectors 740, 742, 744,
Wireless Transceiver 740i, 742i, 744i

FIG. 43

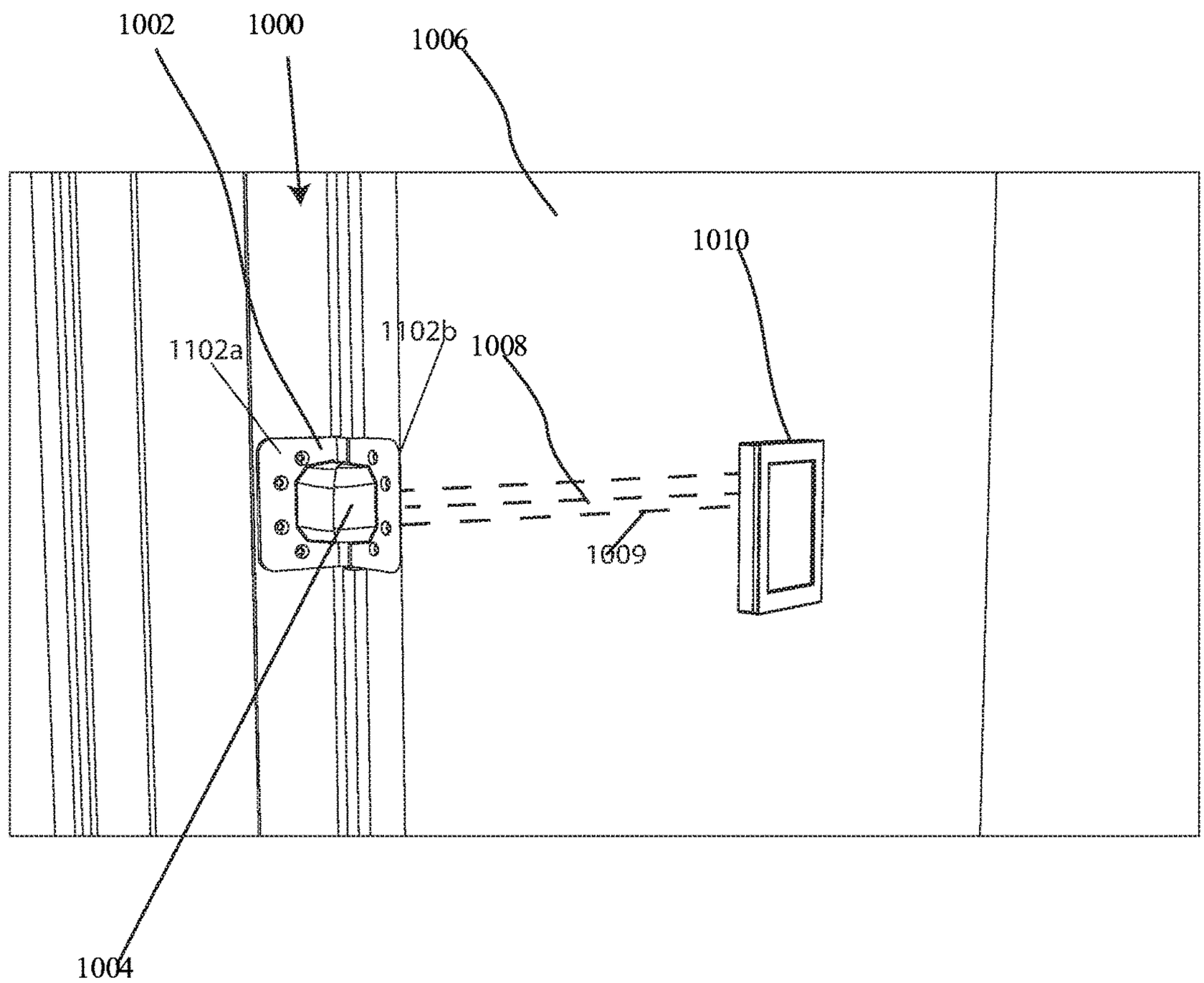

FIG. 44

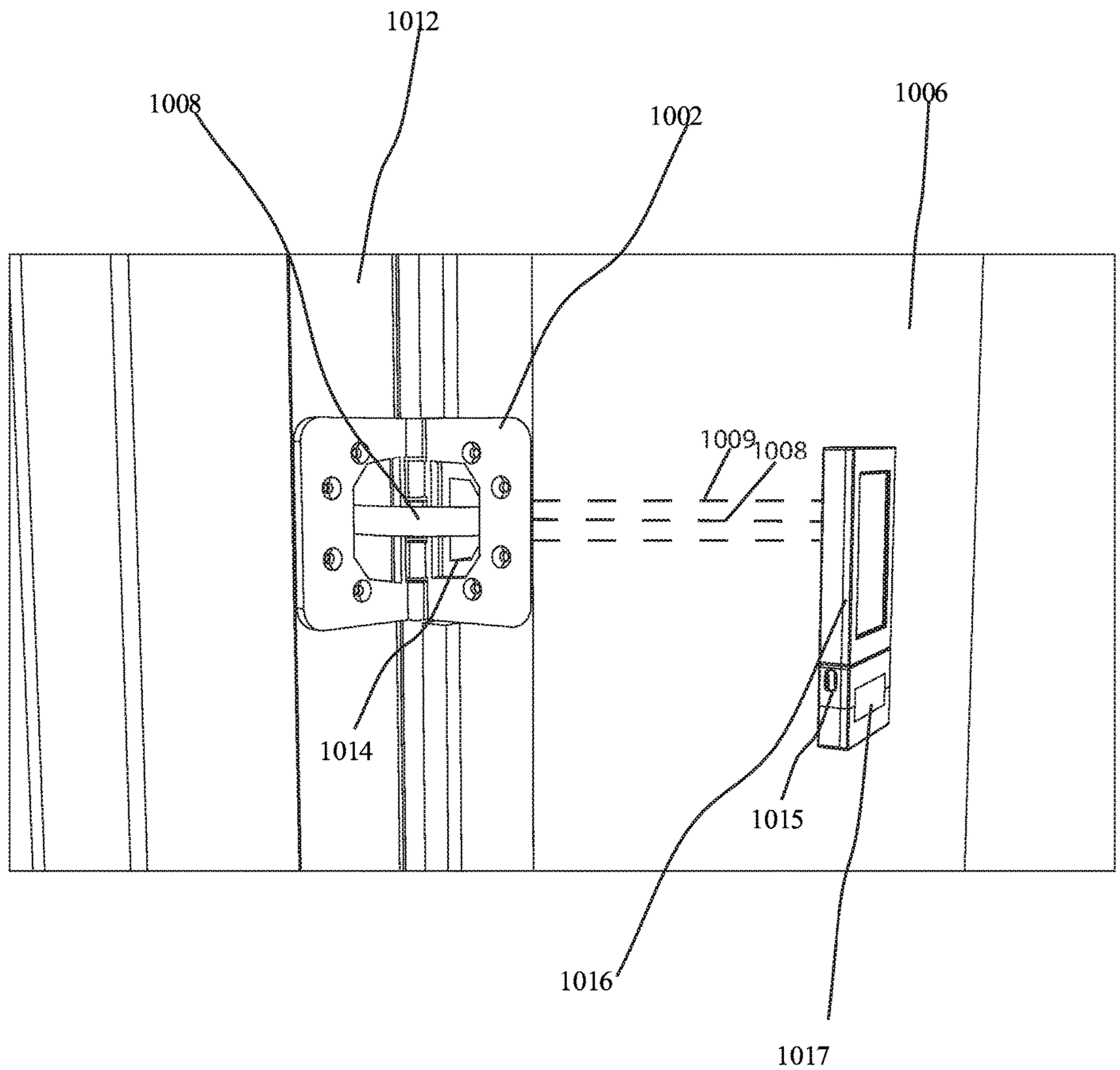

FIG. 45A

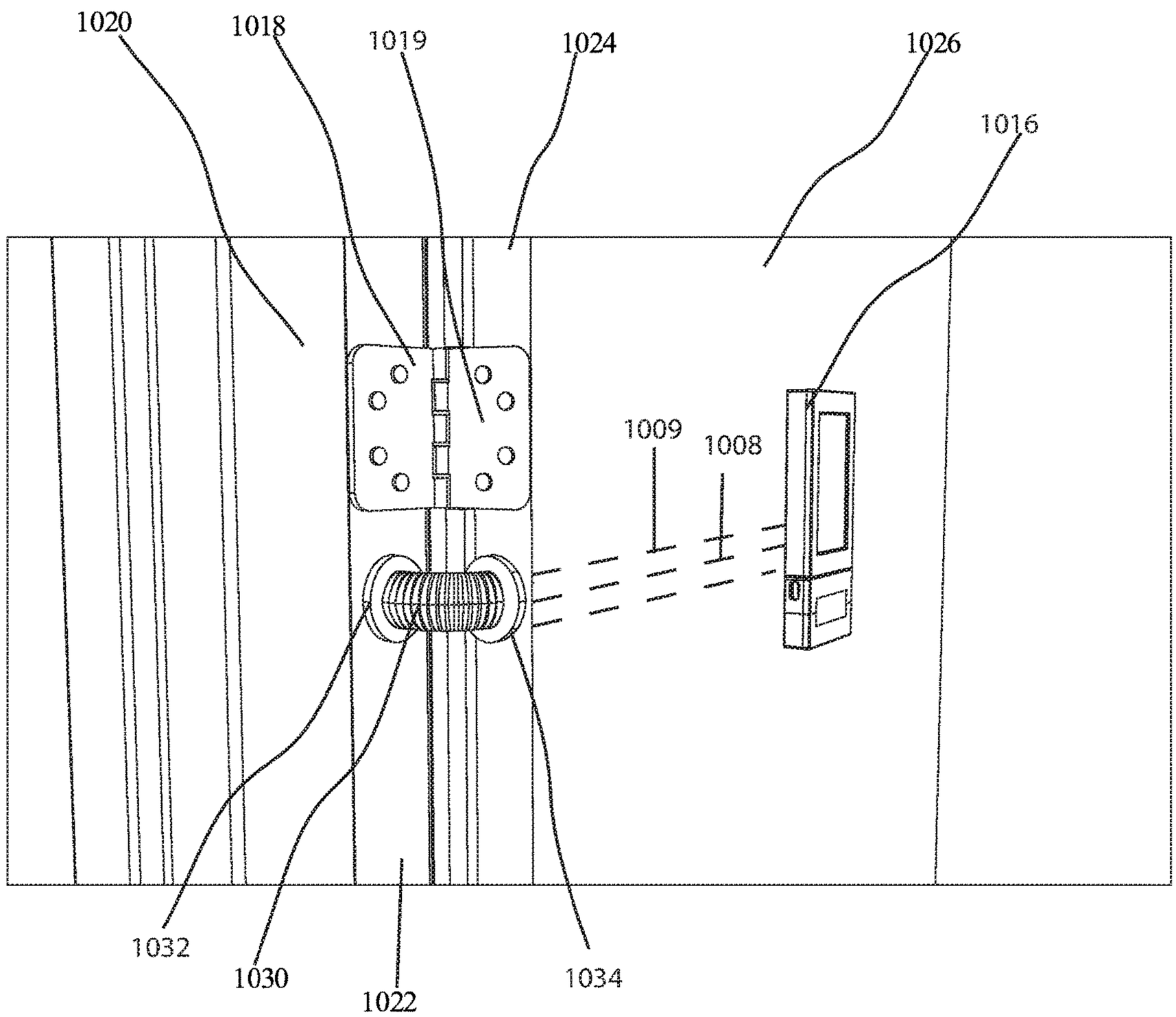

FIG. 45B

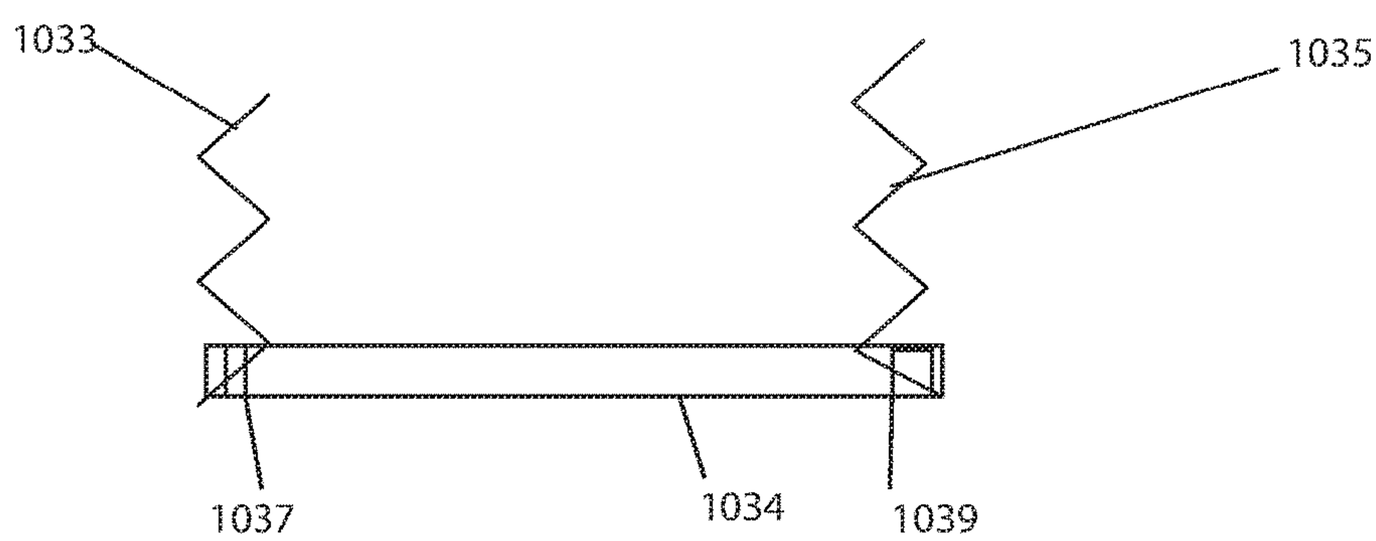

FIG. 46A

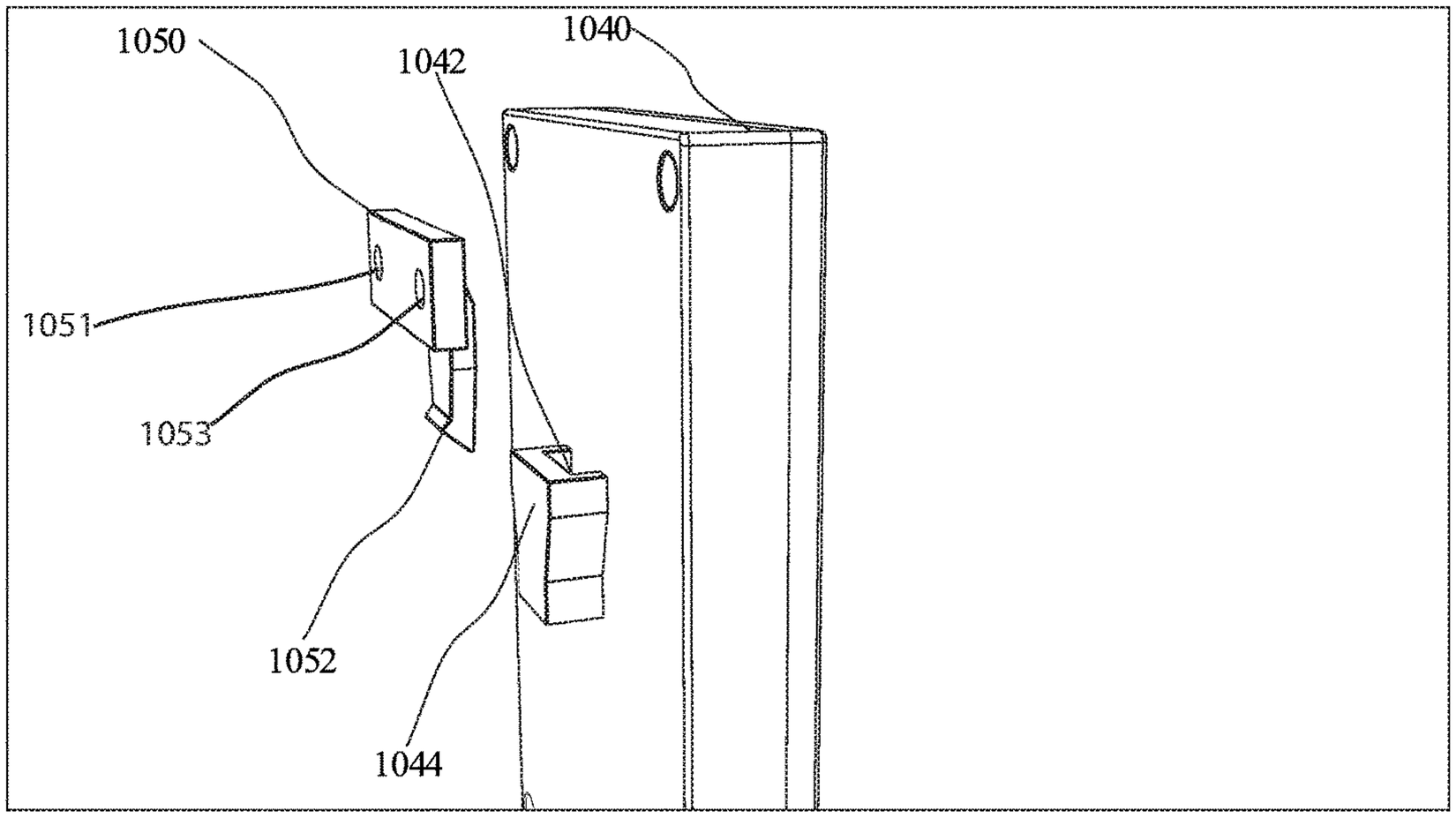

FIG. 46B

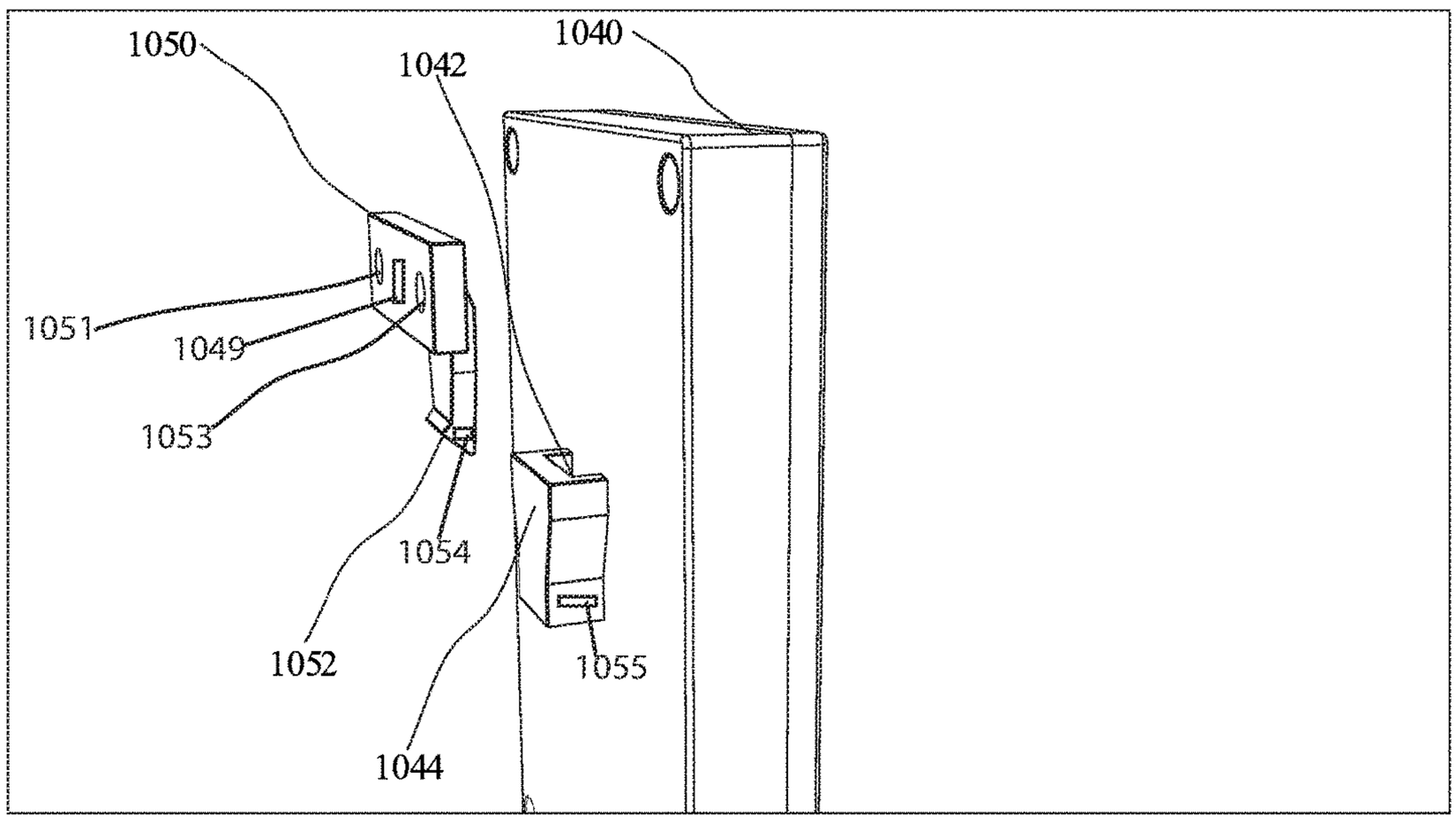

FIG. 47

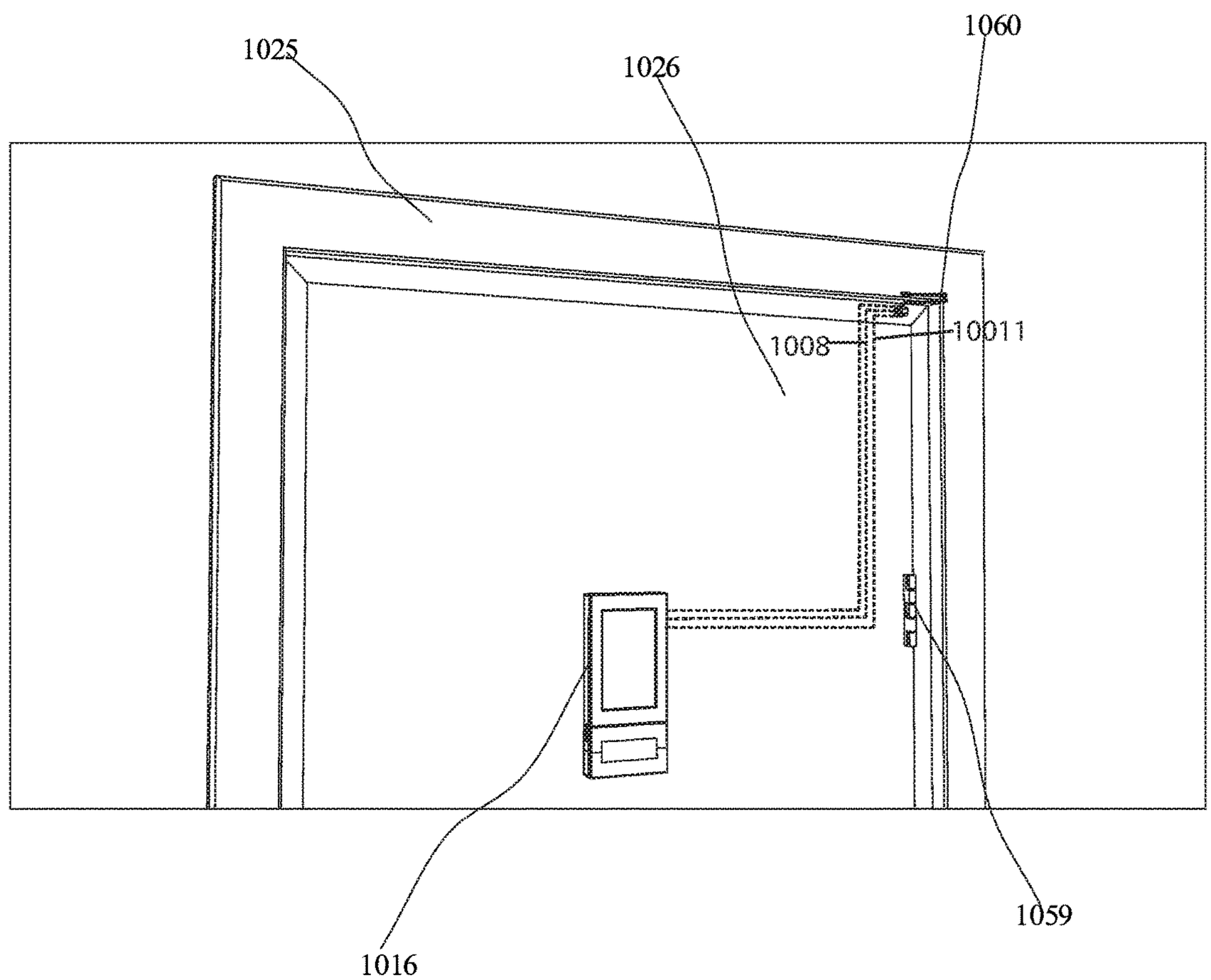

FIG. 48

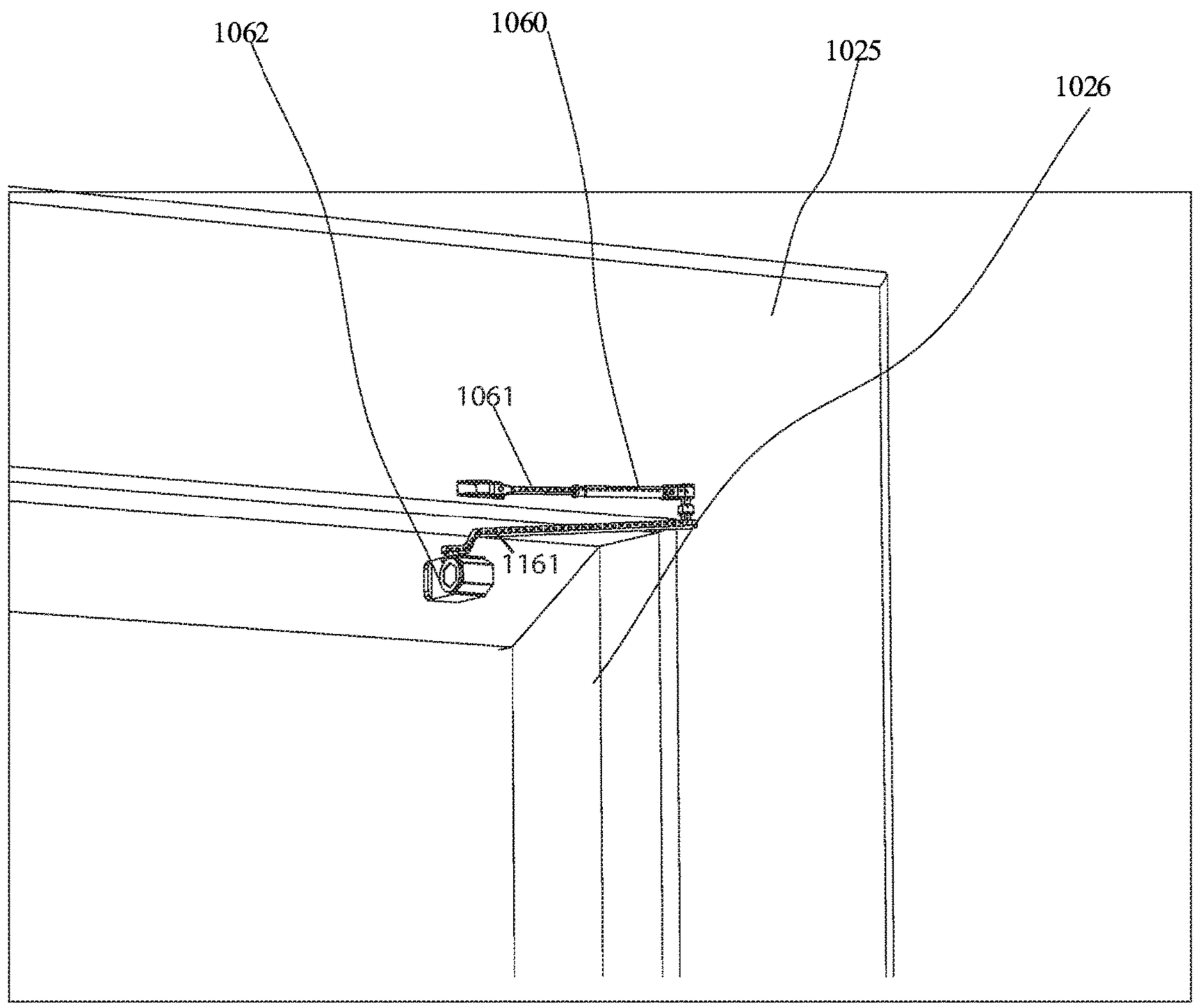

FIG. 49

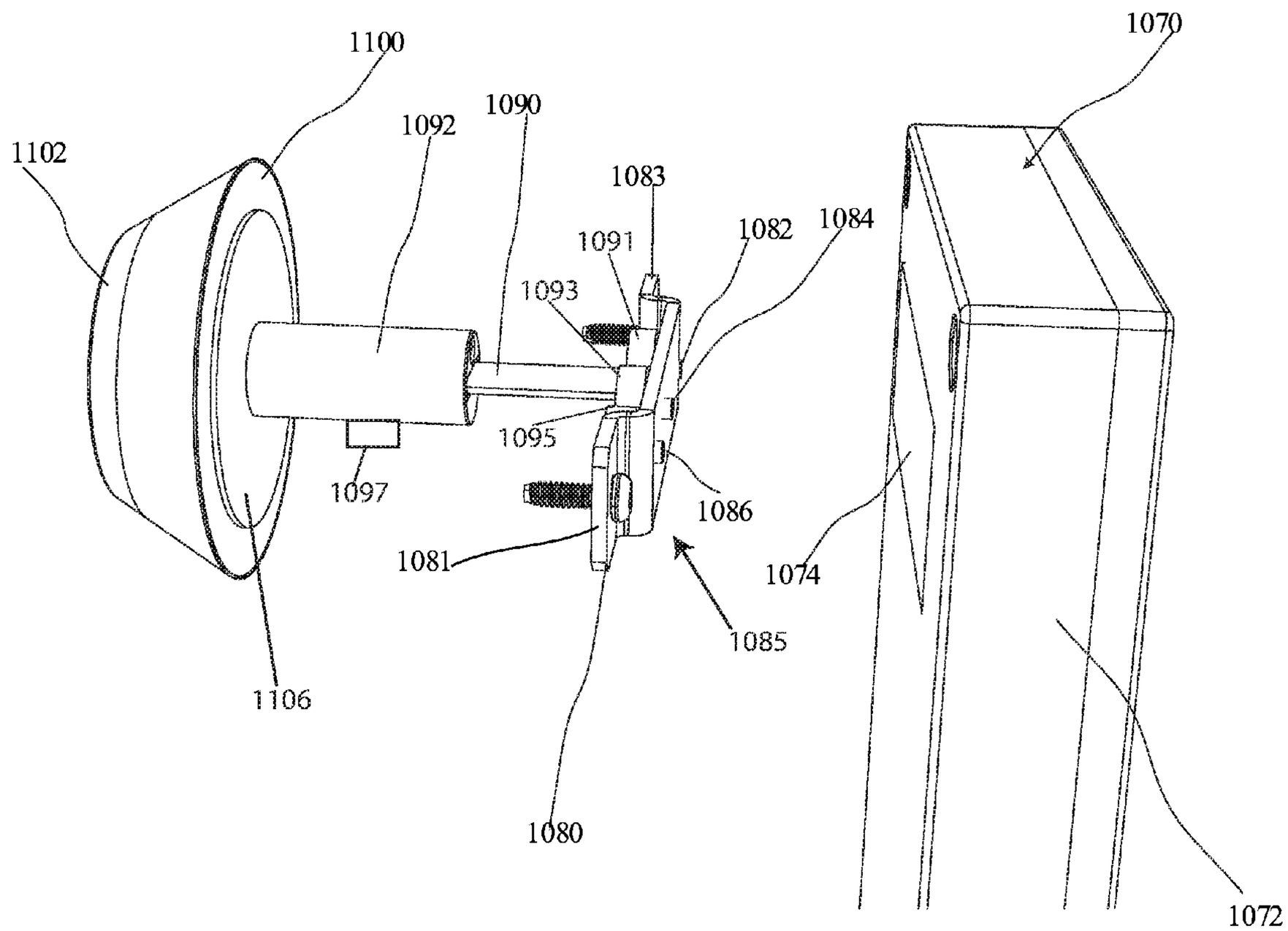
1100
1070
1090
1092
1102
1083
1082
1084
1091
1093
1095
1097
1086
1081
1074
1085
1106
1080
1072

FIG. 50

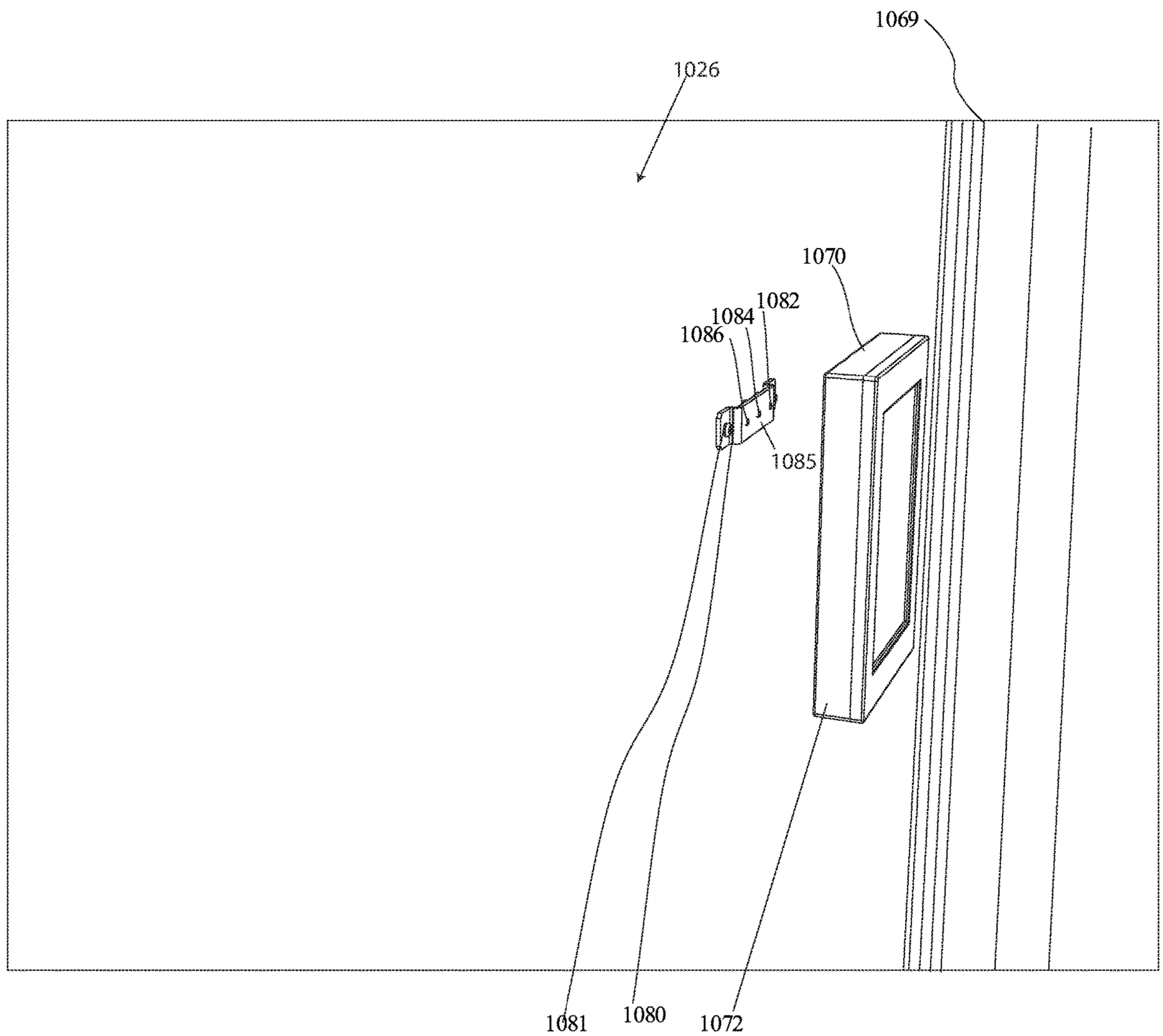

FIG. 51A

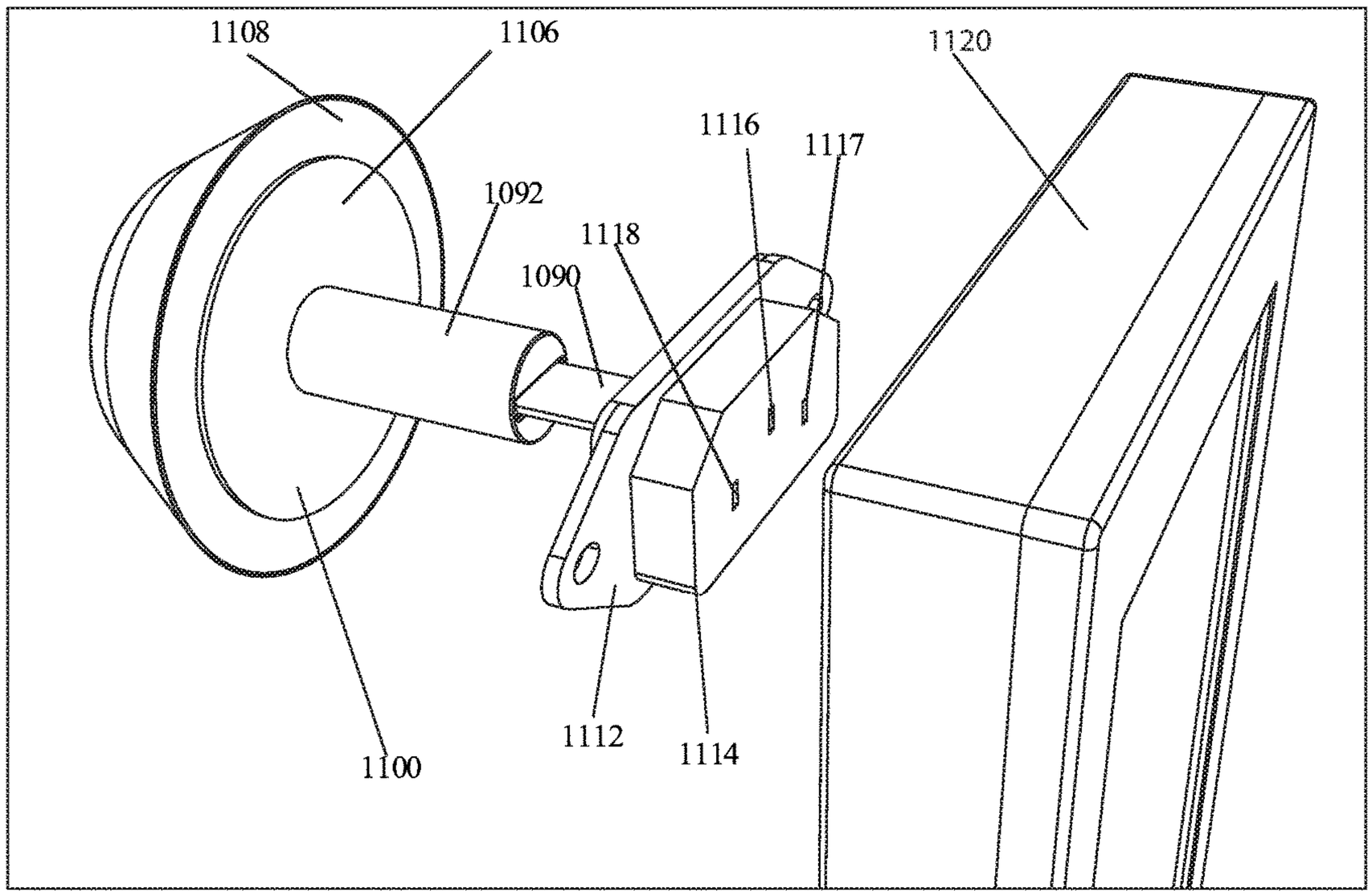

FIG. 51B

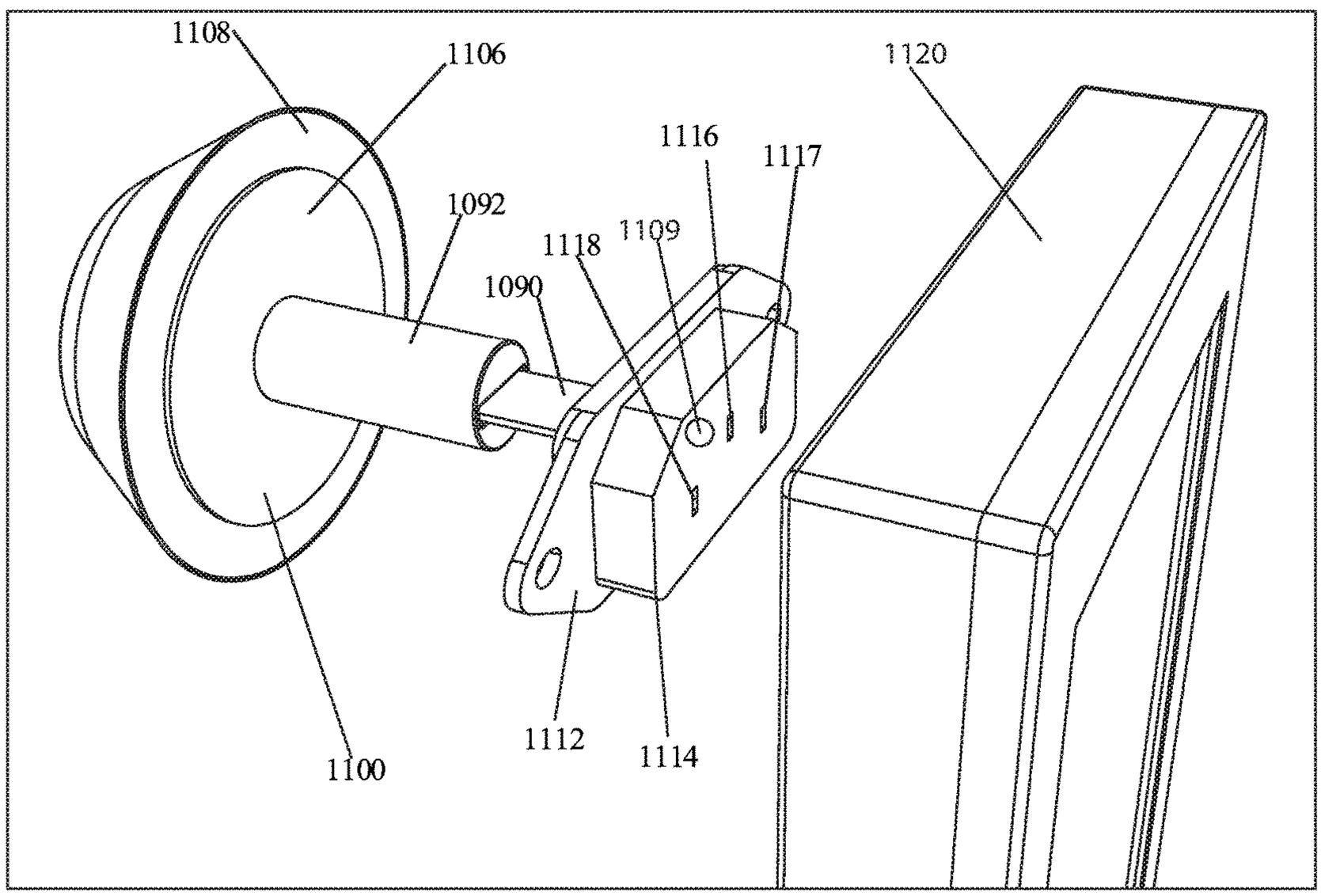

FIG. 52A

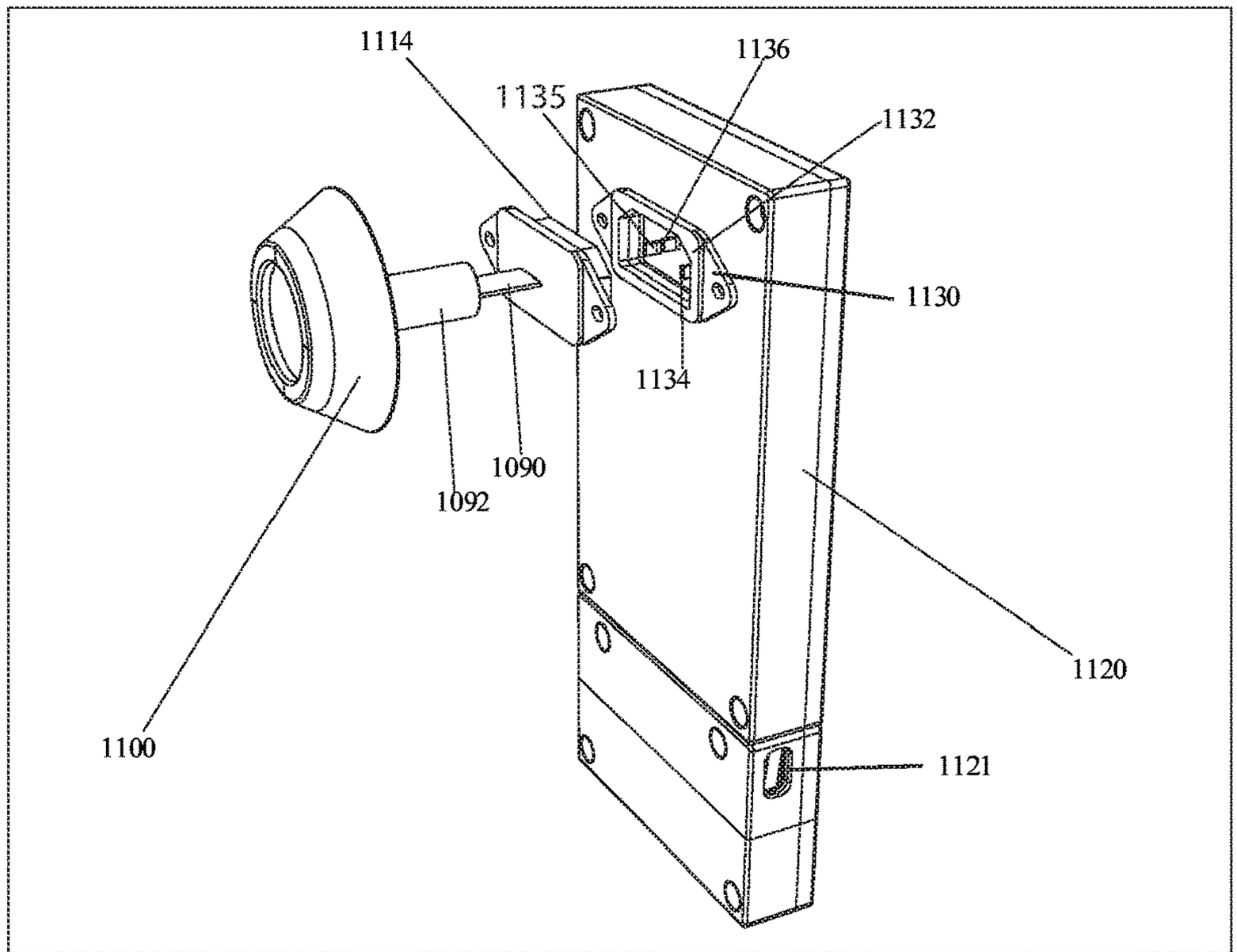

FIG. 52 B

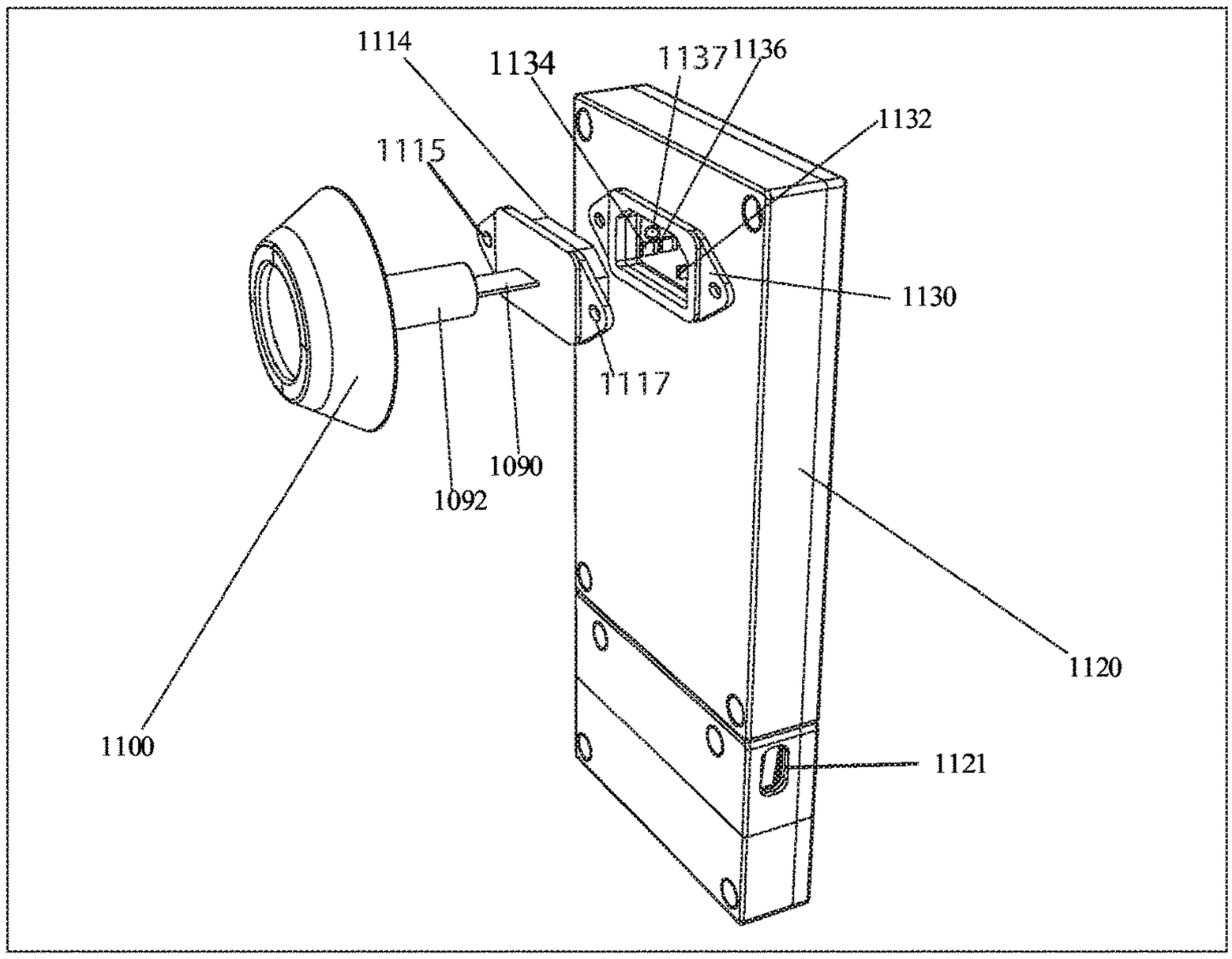

FIG. 53

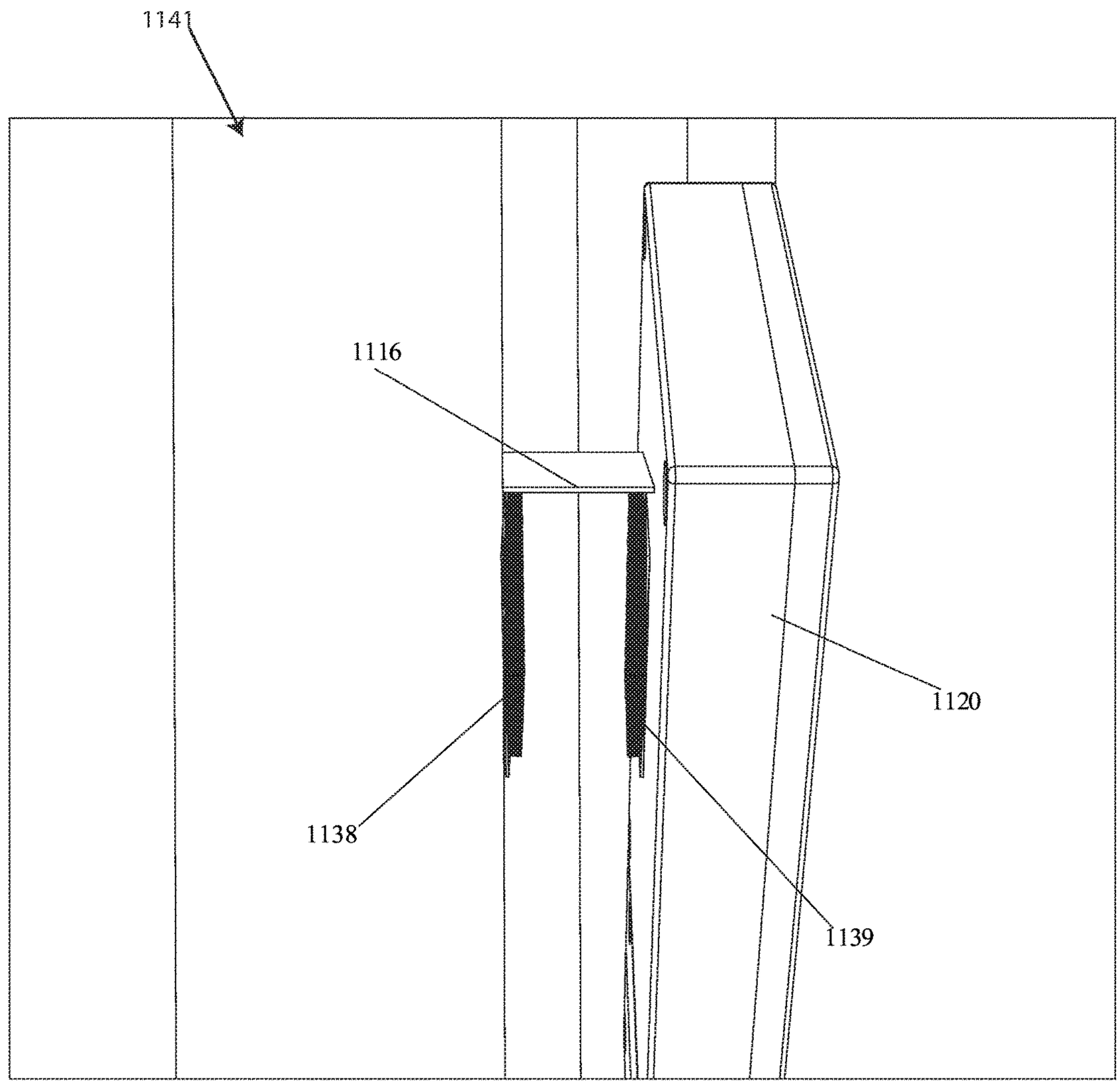

FIG. 54

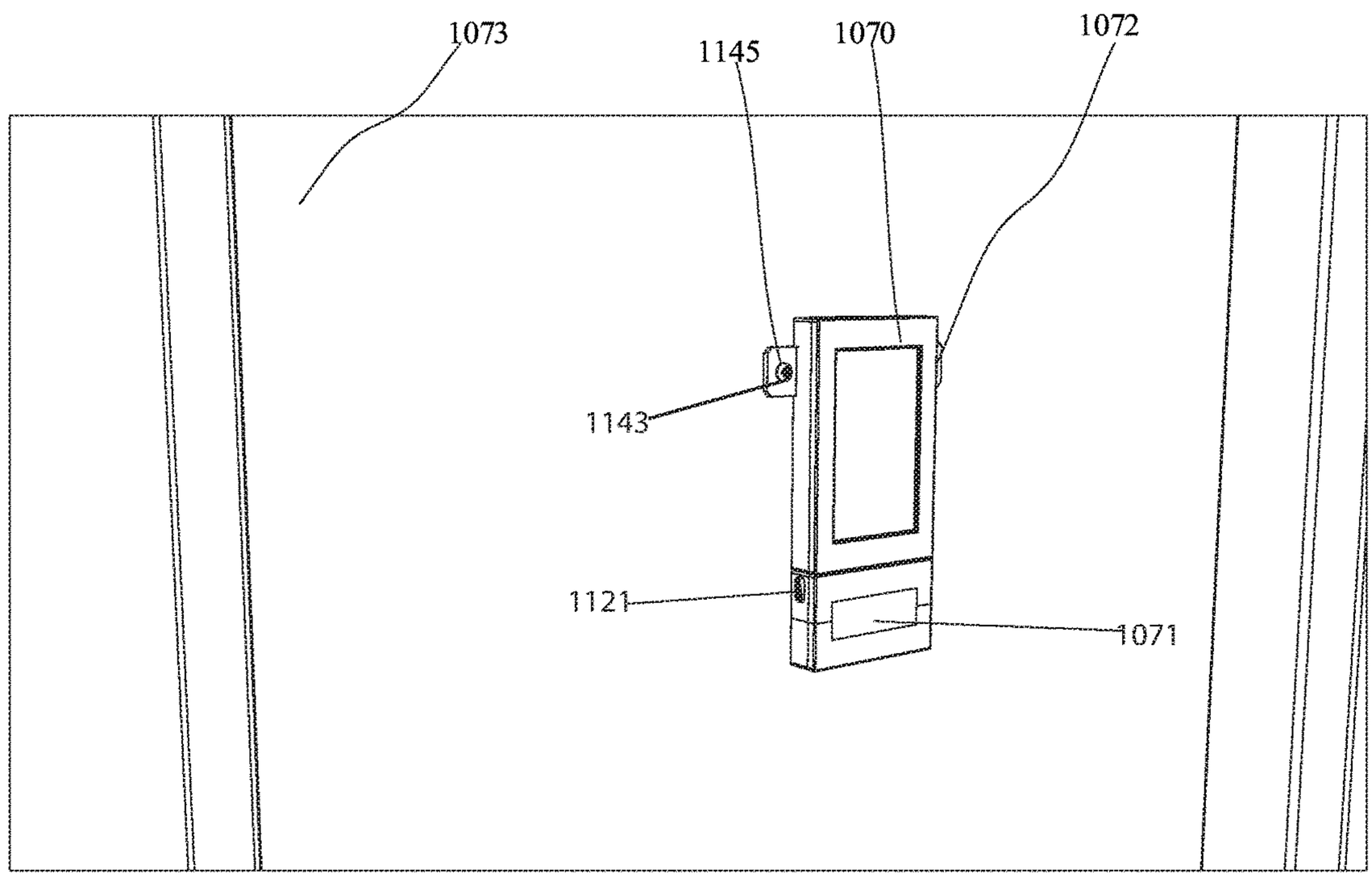

FIG. 55A

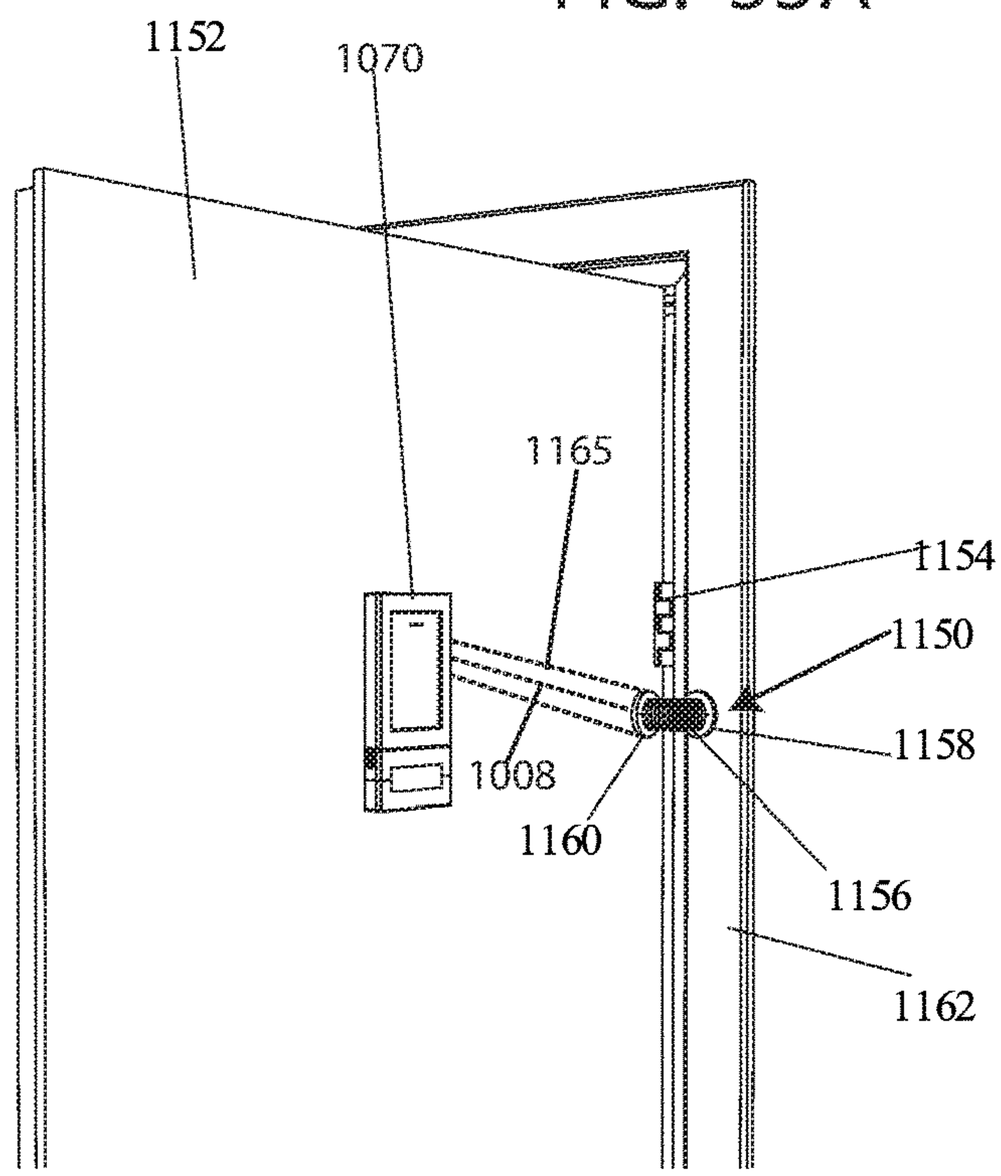

FIG. 55B

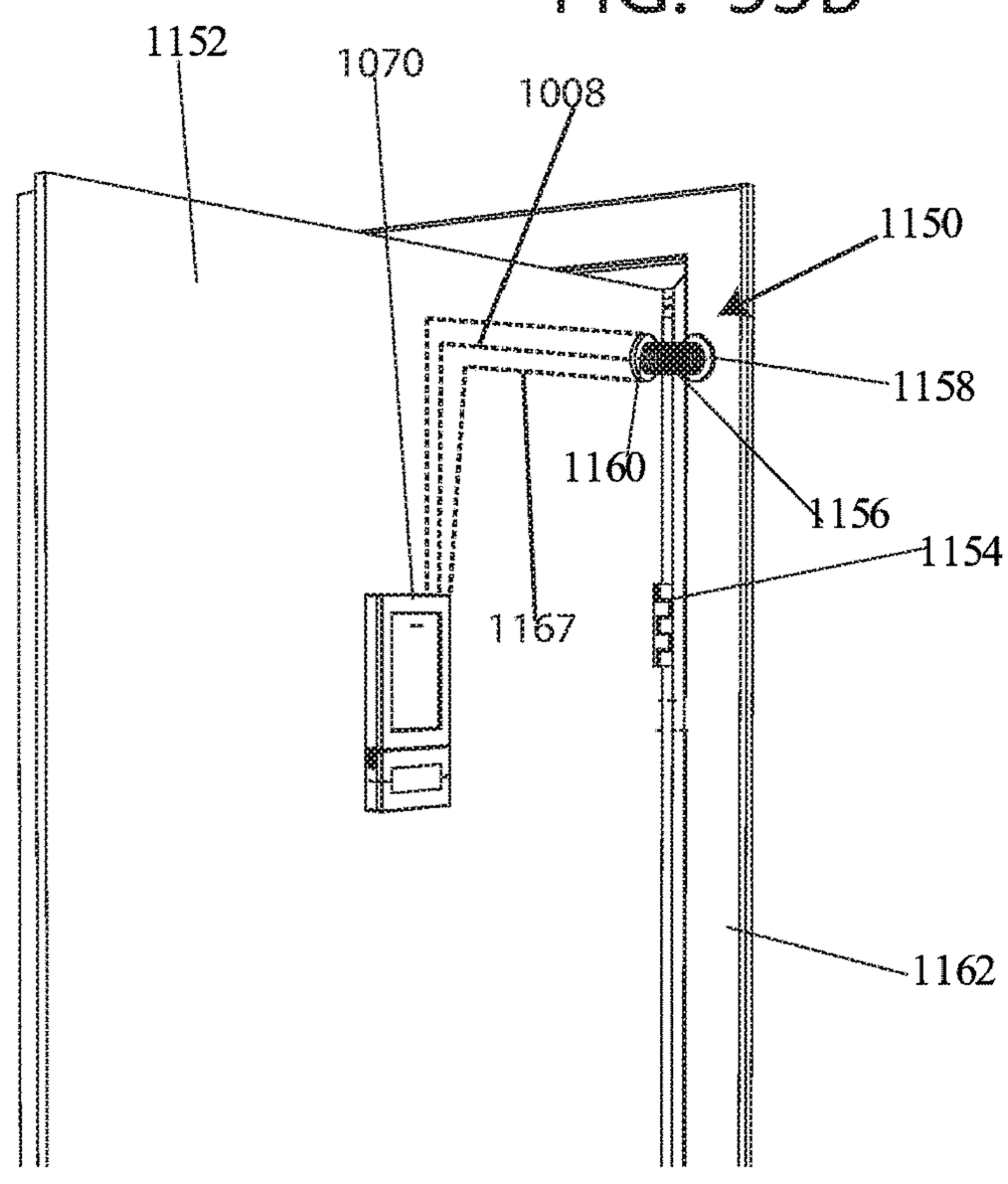

FIG. 56

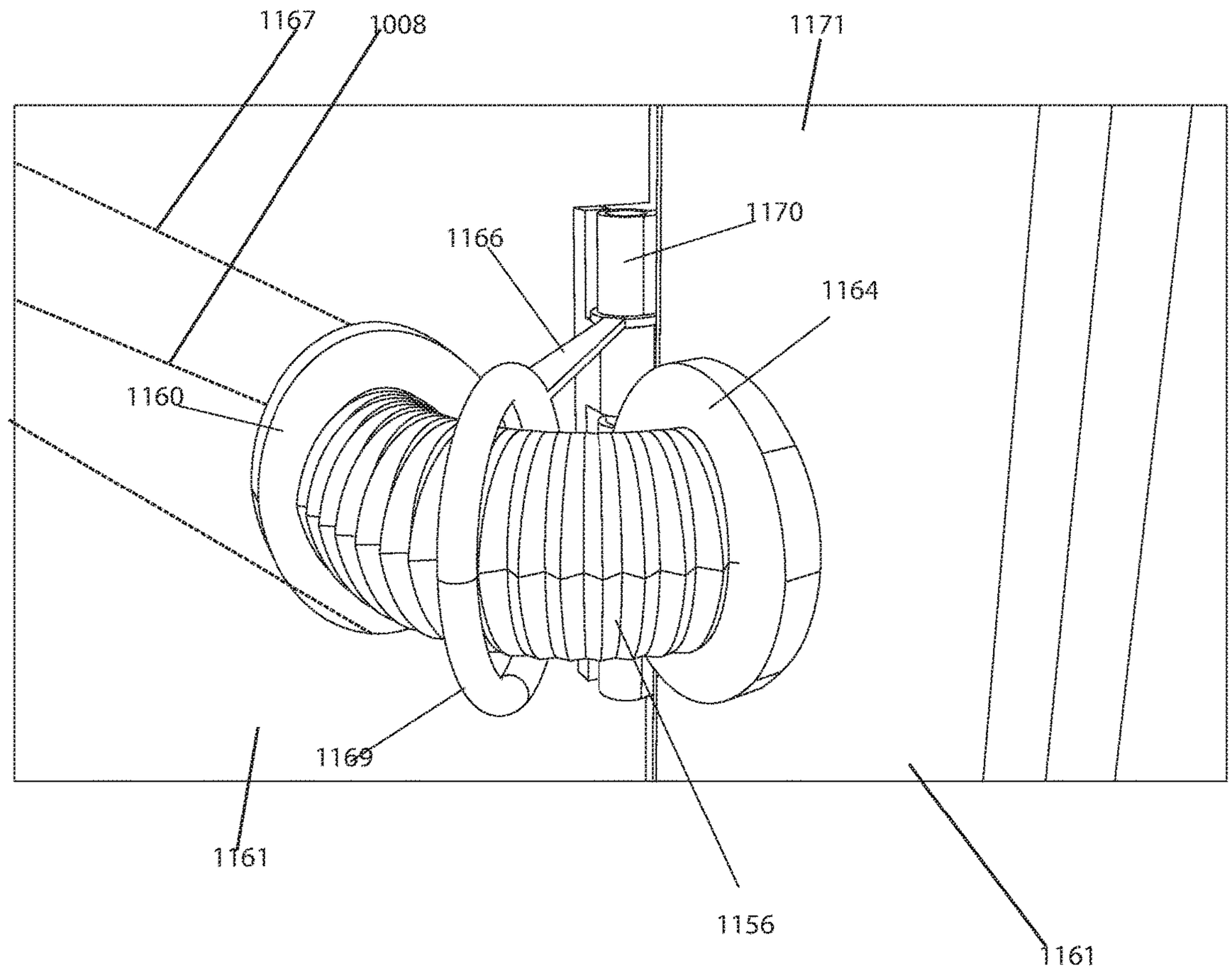

FIG. 57A

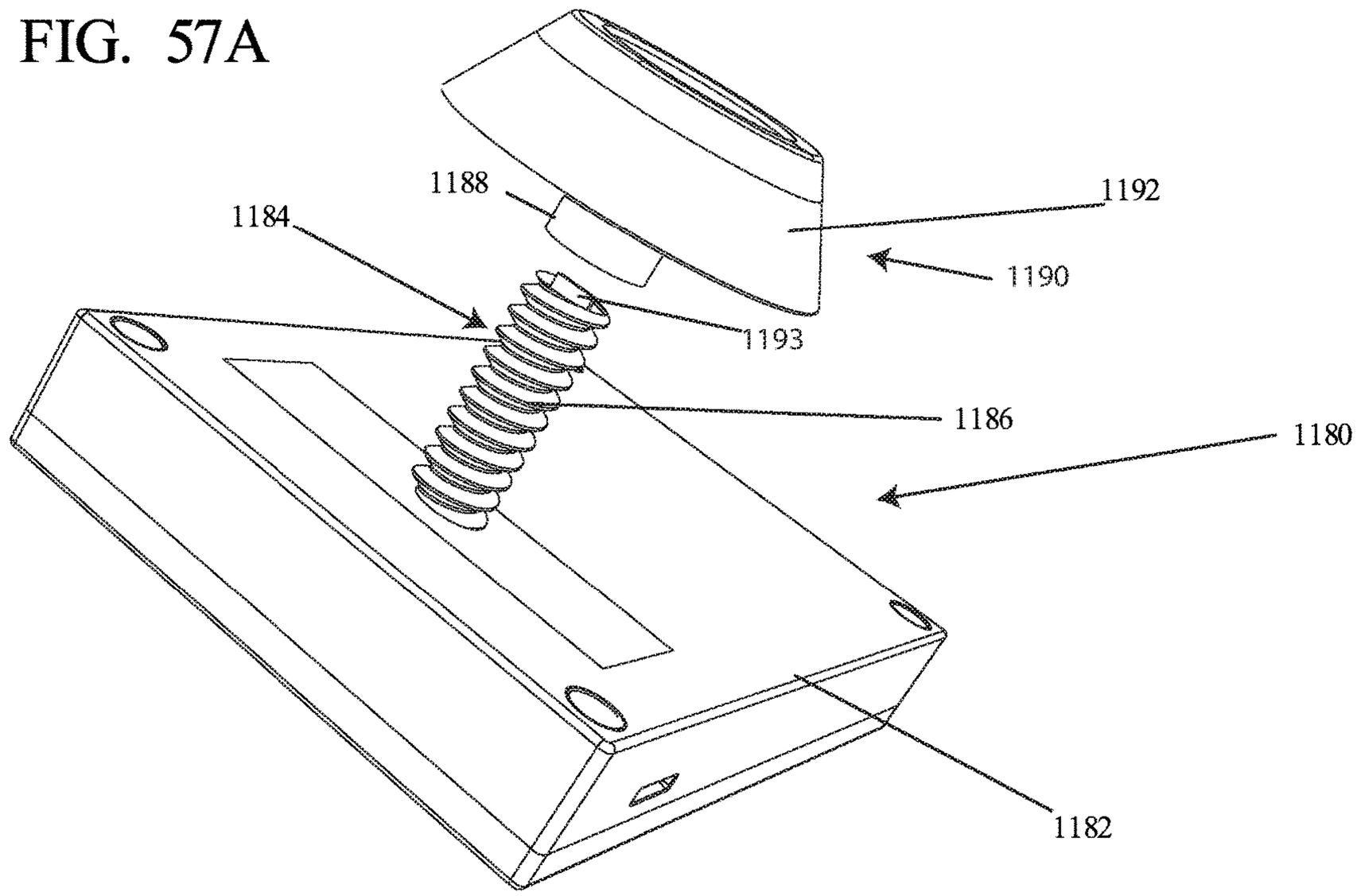

FIG. 57B

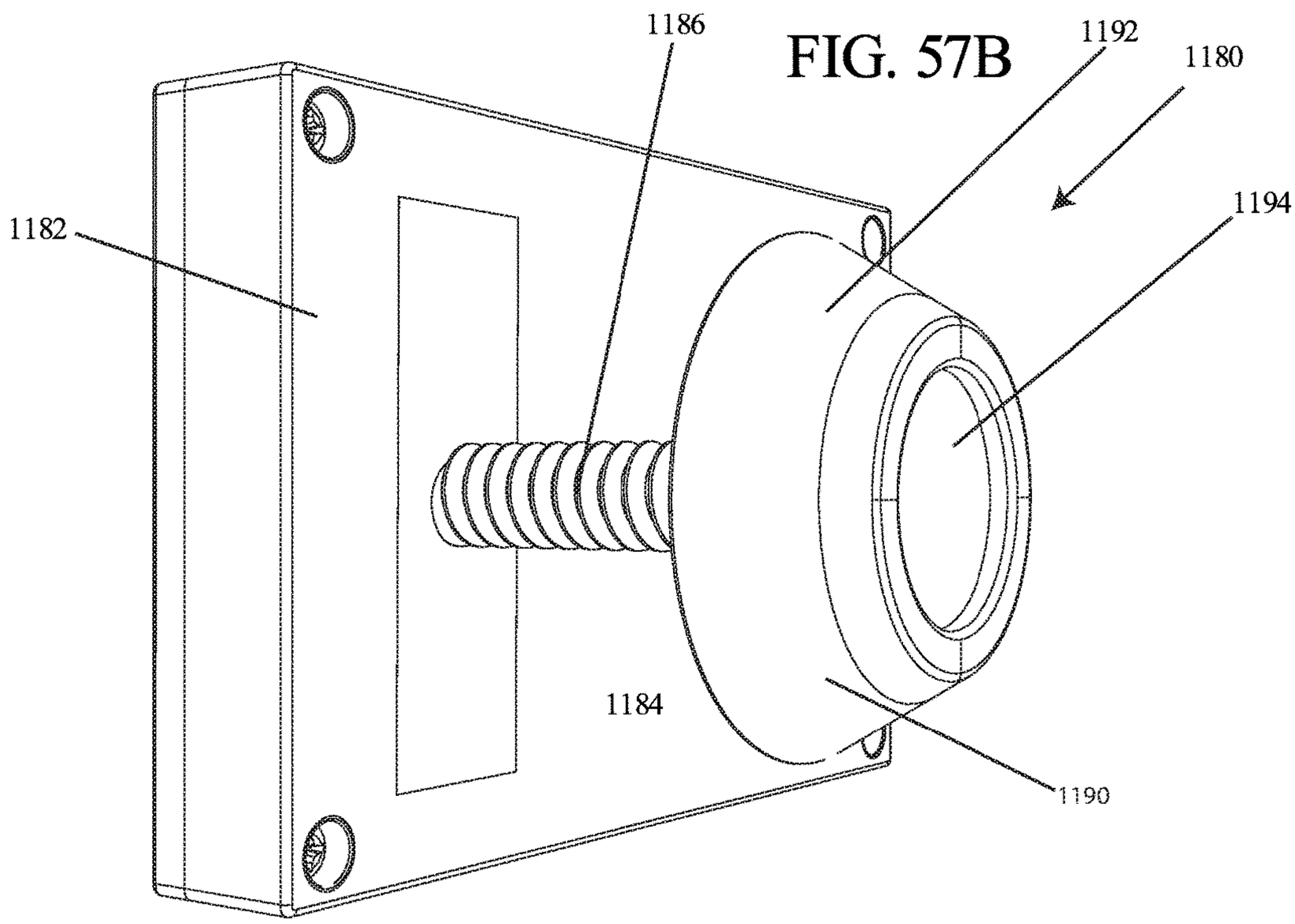

FIG. 58A

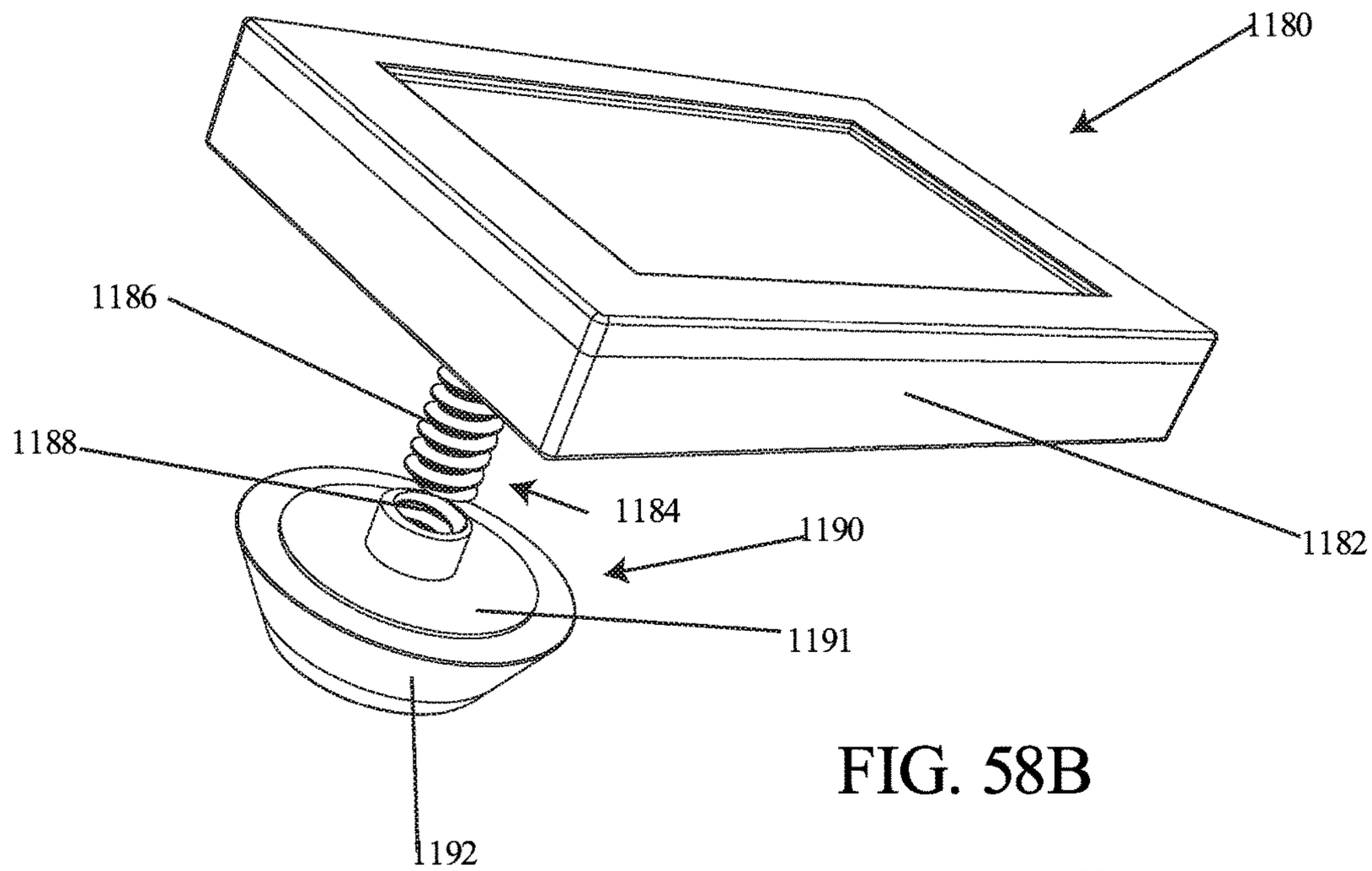

FIG. 58B

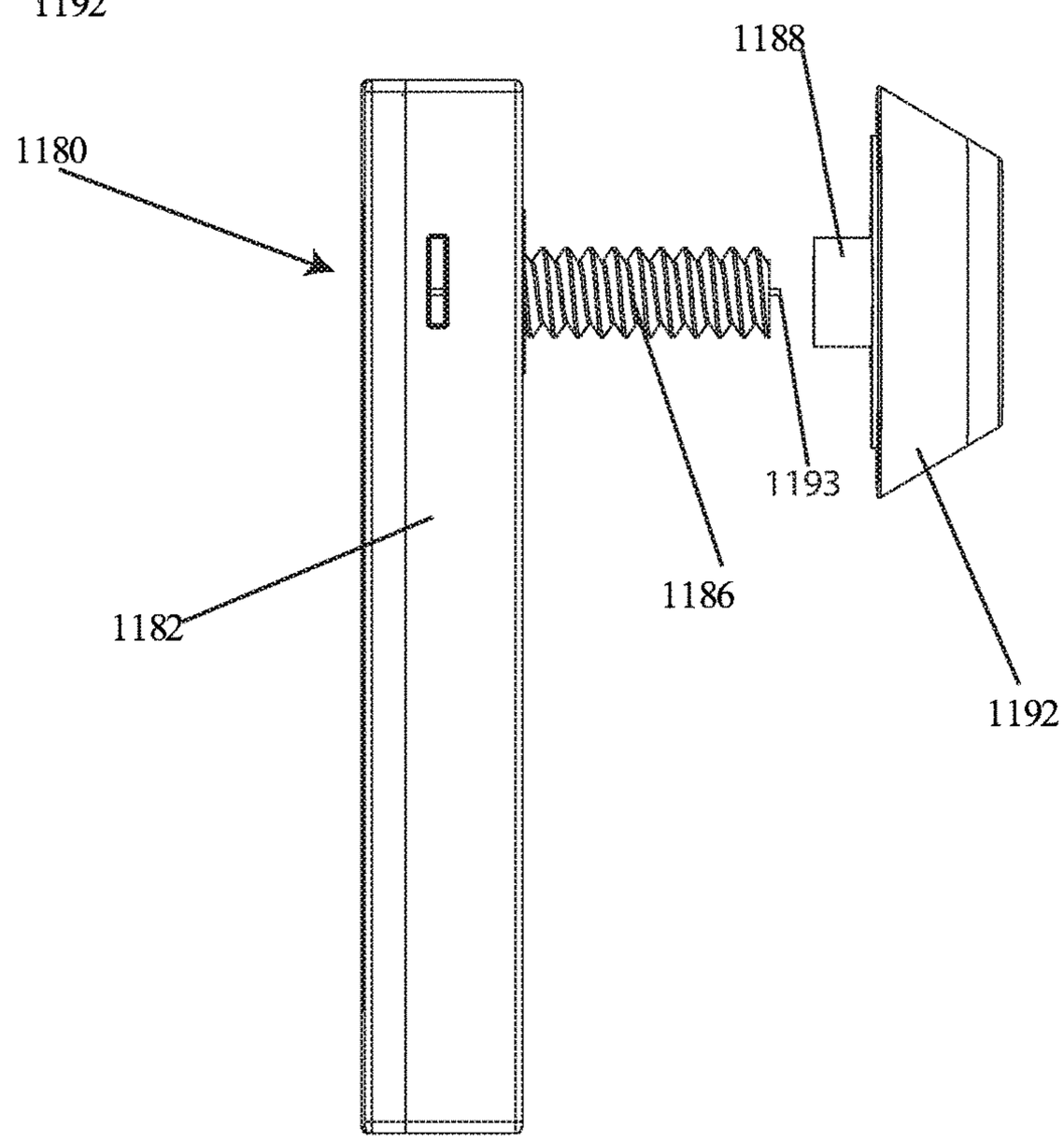

FIG. 59

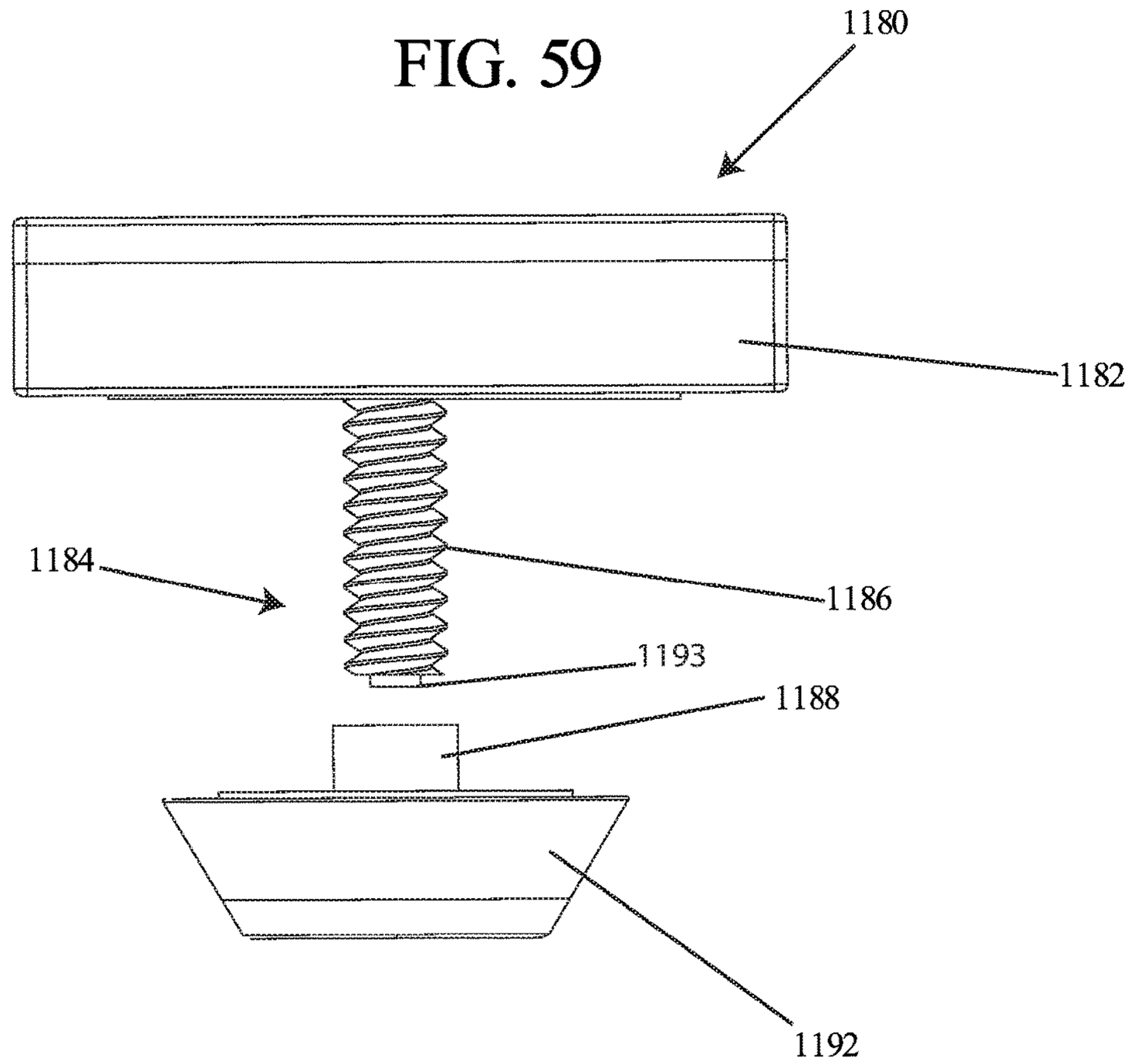

FIG. 60A

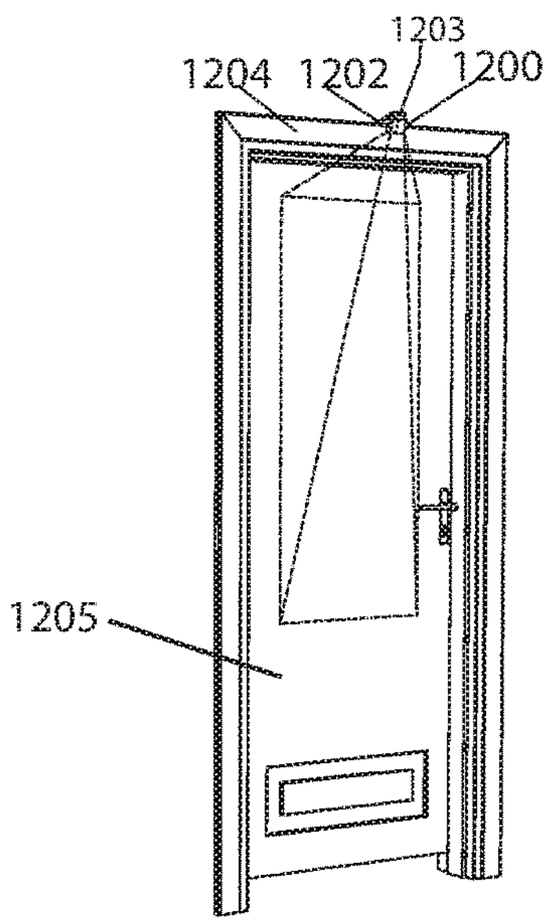

FIG. 60B

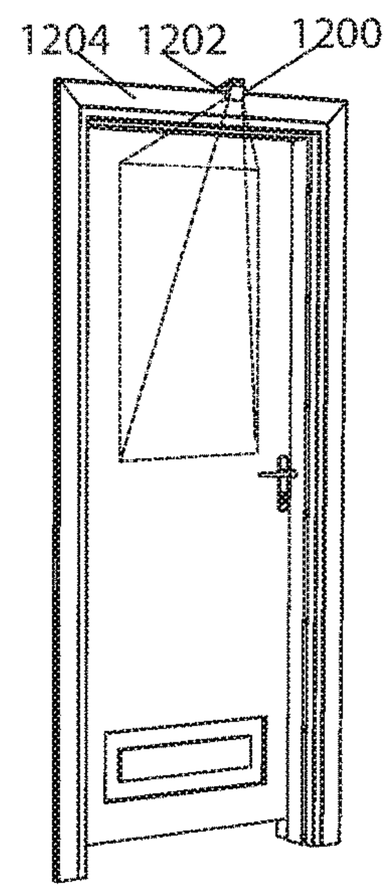

FIG. 60C

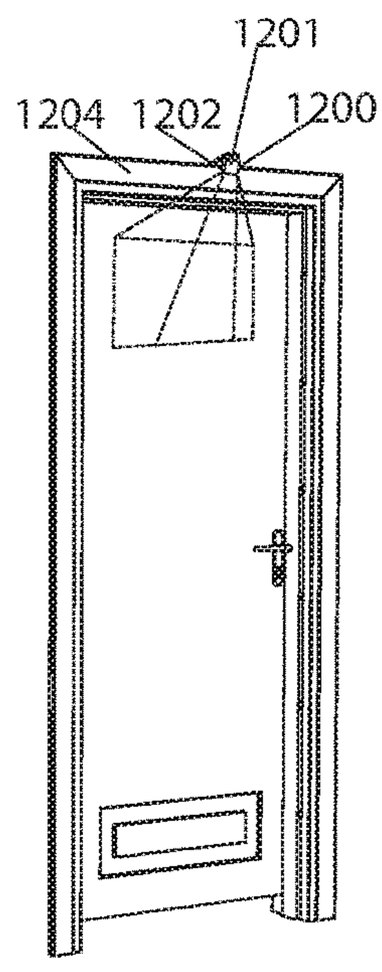

FIG. 61

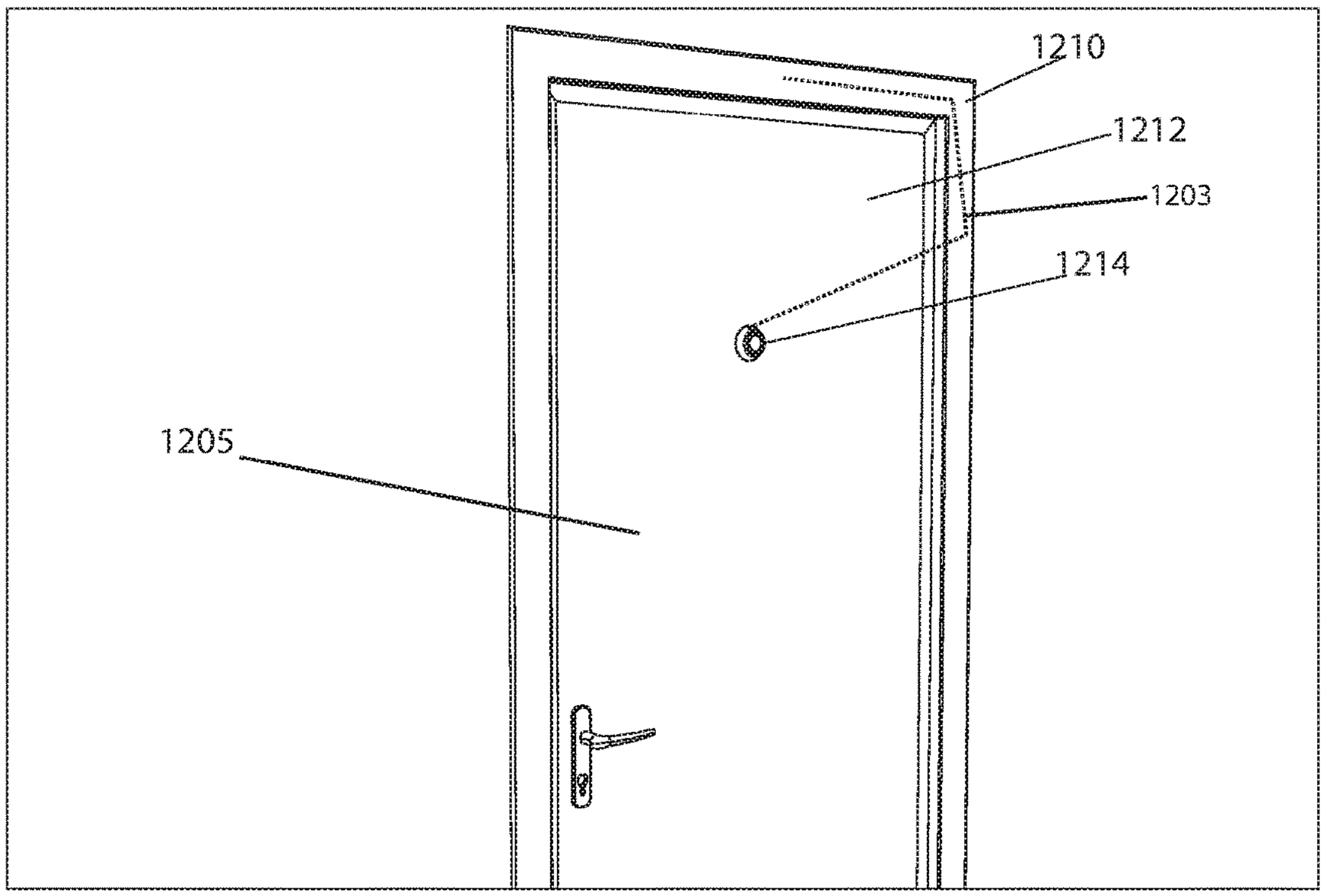

FIG. 62A

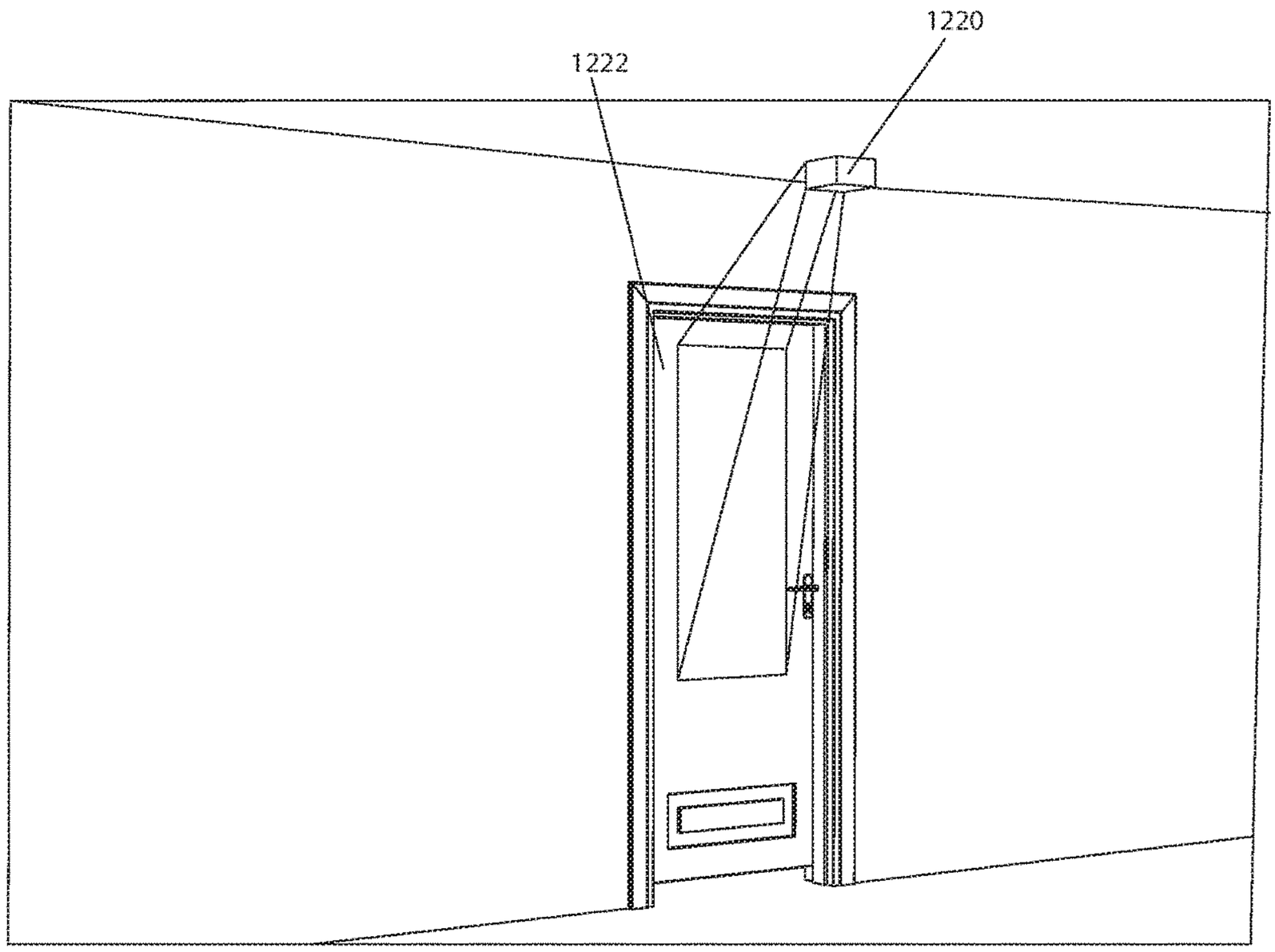

FIG. 62B

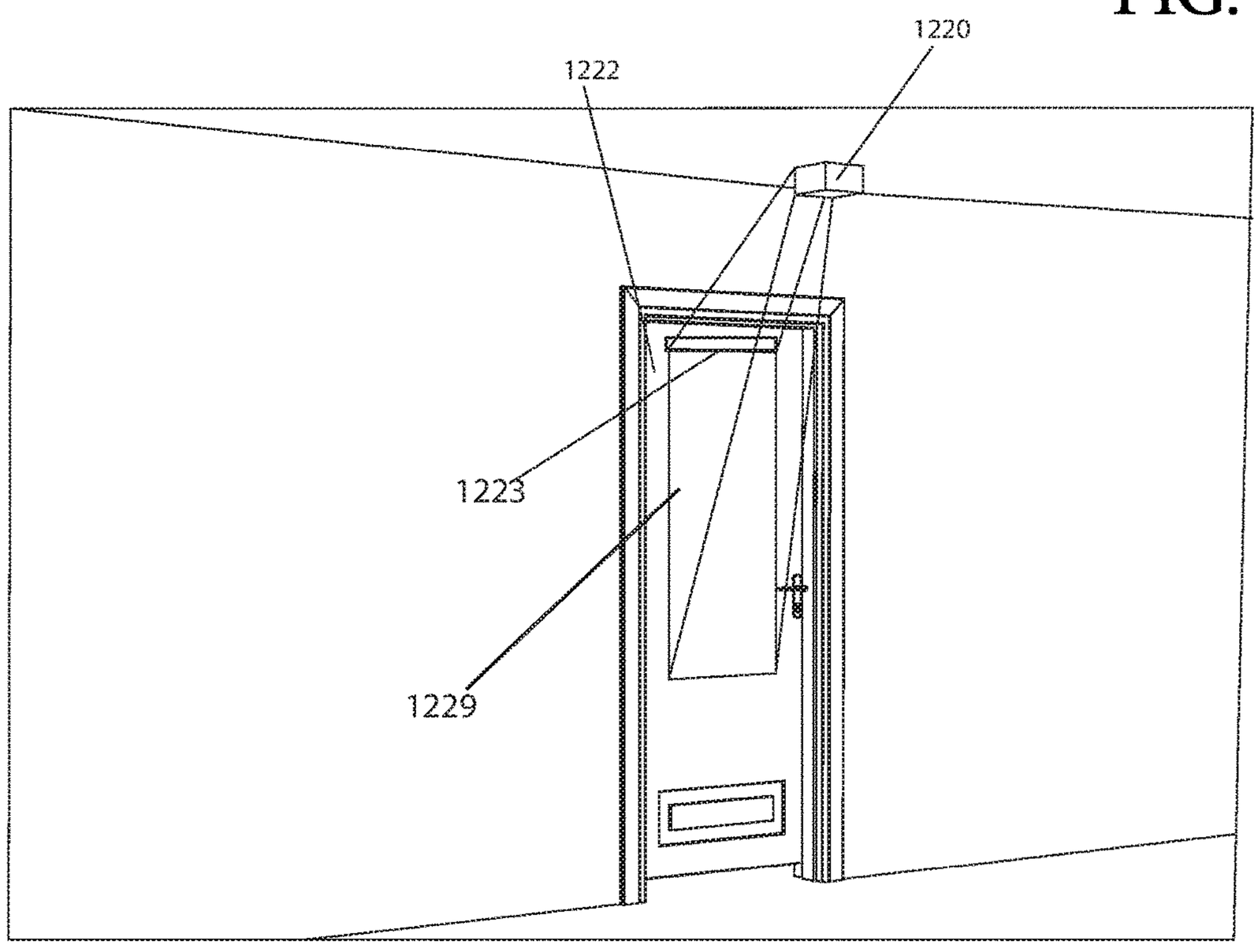

FIG. 63

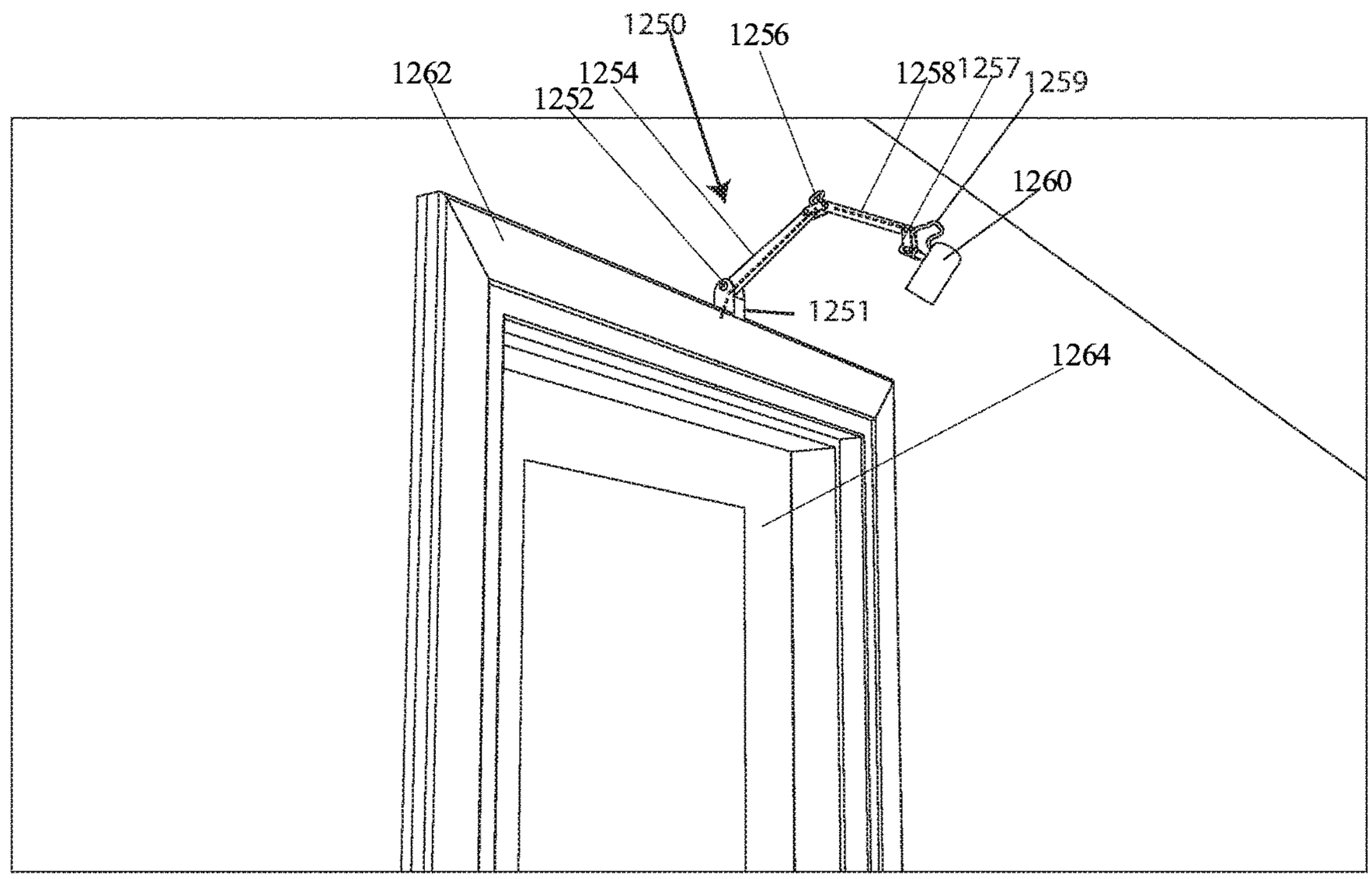

MOUNTING SYSTEM FOR A CAMERA

CROSS REFERENCE TO RELATED APPLICATIONS

This application is a non-provisional application that claims priority under 35 U.S.C. 119e from provisional application Ser. No. 62/323,624 filed on Apr. 16, 2016. This application is a continuation in part application which claims priority from U.S. patent application Ser. No. 14/898,128 filed on Dec. 12, 2015, wherein that application is a national stage application of international Application Serial No. PCTUS2015/65255 filed on Dec. 11, 2015 wherein the national stage application and the international application are non-provisional applications that hereby claims priority to provisional patent application Ser. No. 62/091,346 filed on Dec. 12, 2014, and to provisional application Ser. No. 62/181,165, filed on Jun. 17, 2015. This application also claims priority under 35 U.S.C. 119e to provisional application Ser. No. 62/181,165, filed on Jun. 17, 2015. The disclosure of all of these applications are hereby incorporated herein by reference in their entirety.

BACKGROUND

The invention relates to a camera system for a door or entrance way wherein the camera system is configured to allow a user to view those standing in an entranceway in an improved manner.

SUMMARY

In at least one embodiment, there is an apparatus comprising at least one mount, at least one electronic device configured to be coupled to the mount, at least one camera coupled to the electronic device and to the mount. In at least one embodiment the at least one mount comprises at least one coupling element for coupling the at least one electronic device to the at least one mount and wherein the mount is configured to allow the electronic device to be mounted on a surface. The electronic device can comprise a screen or viewing display. The mount can comprise a body to receive or hold the electronic device.

In one embodiment the mount comprises at least one adjustable arm. In at least one embodiment the adjustable arm comprises a ball and socket joint. In another embodiment the camera further comprises at least one lens assembly. In one embodiment the lens assembly and the mount further comprise a screw connection. In addition, in another embodiment, there is a connection bracket with prongs, which are configured to receive a display coupled to a camera.

BRIEF DESCRIPTION OF THE DRAWINGS

Other objects and features of the present invention will become apparent from the following detailed description considered in connection with the accompanying drawings. It is to be understood, however, that the drawings are designed as an illustration only and not as a definition of the limits of the invention.

In the drawings, wherein similar reference characters denote similar elements throughout the several views:

FIG. **1** shows a back perspective view of a first embodiment of the invention;

FIG. **2** shows an alternative view which is a front-end perspective view without the screen;

FIG. **3** shows another back perspective view of the embodiment;

FIG. **4**A shows a top cross-sectional view of a door for receiving the device;

FIG. **4**B shows the device coupled therein;

FIG. **4**C shows the side cross-sectional view of the door;

FIG. **5**A shows a door with a different embodiment coupled thereto;

FIG. **5**B shows the opposite side of door, which includes eyehole;

FIG. **6** shows a view of a cable;

FIG. **7** shows a perspective view of another embodiment which is an integrated electronic device;

FIG. **8** shows an exploded view of the device shown in FIG. **7**;

FIG. **9** shows a side view of another embodiment of the camera coupled to electronic device;

FIG. **10** shows camera section coupled to an embodiment of the electronic device;

FIG. **11** shows another embodiment of another camera which can be separate from the screen element;

FIG. **12** shows a side view of the electronic device;

FIG. **13** shows an exploded view of another camera device;

FIG. **14** shows an exploded view of the camera;

FIG. **15** shows a view of the camera assembled;

FIG. **16** shows a side view of the camera of FIG. **13** coupled to a device;

FIG. **17** shows a side view of a coupling element;

FIG. **18** shows a back perspective view of one embodiment;

FIG. **19** shows a front perspective view of the embodiment shown in FIG. **18**;

FIG. **20** shows a front perspective view of at least one other embodiment;

FIG. **21** shows a back view of an alternative bracket;

FIG. **22** shows a side view of an electronic device;

FIG. **23** shows a side view of an alternative electronic device;

FIG. **24**A shows a side view of another embodiment mounted on a door;

FIG. **24**B shows a side view of an electronic device;

FIG. **25** shows a side view of a lens system;

FIG. **26**A shows a view of a screen mounted on a door;

FIG. **26**B shows a side view of an adjustable bracket for mounting on a door;

FIG. **27**A shows a side view of another embodiment;

FIG. **27**B shows a side view of the lens system;

FIG. **28** shows an outside view of a door;

FIG. **29** shows a side perspective view of another embodiment;

FIG. **30** shows a side exploded view of the embodiment of FIG. **29**;

FIG. **31** shows a back semi-assembled view of the embodiment of FIG. **29**;

FIG. **32** shows a back exploded view of the embodiment of FIG. **29**;

FIG. **33**A shows a back view of the bracket and camera element;

FIG. **33**B shows a front view of the camera element;

FIG. **33**C shows a side view of the camera element;

FIG. **34** is a back view of the housing bracket;

FIG. **35** shows a front view of the housing bracket with the screen not disposed therein;

FIG. **36** shows a view of a door from the outside;

FIG. **37** shows a view of a door from the inside;

FIG. **38** shows a front side view of another embodiment;

FIG. **39** shows a side view of another embodiment;

FIG. **39**A shows a side cross-sectional view of a camera for use with the screens or displays disclosed herein;

FIG. **39**B shows a side cross sectional view of another embodiment;

FIG. **39**C is a side view of the adjustable connection of FIG. **39**B;

FIG. **39**D shows a side perspective view of a portion of the adjustable connection of FIG. **39**B;

FIG. **39**E shows a side view of a portion of the adjustable connection of FIG. **39**B;

FIG. **39**F shows a side view of the adjustable connector of FIG. **39**B;

FIG. **39**G shows an end view of the adjustable connector of FIG. **39**B;

FIG. **39**H shows a side see-thru view of the embodiment shown in FIG. **39**B;

FIG. **40** is a schematic block diagram of the electronic components;

FIG. **40**A is another embodiment of electronic components;

FIG. **40**B is another view of the components of FIG. **40**A including the lens;

FIG. **41**A shows a view of a first network layout;

FIG. **41**B shows a view of a second network layout;

FIG. **42** shows a view of a third network layout; and

FIG. **43** shows a side perspective view of another embodiment;

FIG. **44** shows a side perspective view of another embodiment;

FIG. **45**A shows a side perspective view of another embodiment;

FIG. **45**B shows another side cross-sectional view of the gasket;

FIG. **46**A shows a side perspective view of another embodiment;

FIG. **46**B shows a side perspective view of another embodiment;

FIG. **47** shows a front perspective view of another embodiment;

FIG. **48** shows a close-up view of the embodiment shown in FIG. **47**;

FIG. **49** shows a side perspective view of another embodiment;

FIG. **50** shows a side perspective view of another embodiment;

FIG. **51**A shows a side perspective view of another embodiment;

FIG. **51**B shows a side perspective view of another embodiment;

FIG. **52**A shows a side perspective view of an embodiment shown in FIG. **51**A;

FIG. **52**B shows a side perspective view of the embodiment shown in FIG. **51**B;

FIG. **53** shows a side view of another embodiment;

FIG. **54** shows a front perspective view of another embodiment;

FIG. **55**A shows a front perspective view of another embodiment;

FIG. **55**B shows a front perspective view of another embodiment;

FIG. **56** shows a front perspective view of another embodiment;

FIG. **57**A shows a side-back perspective view of another embodiment;

FIG. **57**B shows a top back perspective view of the embodiment shown in FIG. **57**A;

FIG. **58**A shows a front-side perspective view of the embodiment shown in FIG. **57**A;

FIG. **58**B shows a front-side perspective view of the embodiment shown in FIG. **57**A;

FIG. **59** shows a side view of the embodiment shown in FIG. **58**A;

FIG. **60**A shows a front perspective view of another embodiment;

FIG. **60**B shows a front perspective view of the embodiment shown in FIG. **57**A;

FIG. **60**C shows a front perspective view of the embodiment shown in FIG. **57**A;

FIG. **61** shows a front perspective view of the embodiment shown in FIG. **57**A;

FIG. **62**A shows a front perspective view of another embodiment;

FIG. **62**B shows a front perspective view of another embodiment; and

FIG. **63** shows the front perspective view of another embodiment.

DETAILED DESCRIPTION

FIG. **1** shows a back perspective view of a first embodiment comprising a device **10**. For example, there is shown a body **11** which includes a plurality of sides **12.1**, **12.2**, **12.3**, and **12.4**, as well as a back surface **12.5**. Disposed at least one of these sides is a hole **13**. Hole **13** is disposed on side **12.3**. Sides **12.1** and **12.2** extend along a longitudinal axis **19.1**. Sides **12.3** and **12.4** extend along latitudinal axis **19.2**. Button **14** is disposed in side **12.1**. Button **18** is disposed in side **12.2**. Holes **17.1** and **17.2** are disposed in side **12.4**. Back surface **12.5** bridges or extends between the different sides **12.1**, **12.2**. **12.3**, and **12.4**. Disposed in side or back surface **12.5** is a hole **16.2**. Disposed in hole **16.2** is a gasket **16.1**. Gasket **16.1** forms a screw receptacle for receiving a camera. In this view, longitudinal axis **19.1** extends along the length or longer dimension of the body while latitudinal axis extends along the width or shorter dimension. Camera **20** comprises a plurality of different components. For example, camera **20** includes a lens assembly comprising a first connection section **22**, a lens section **24**, an adjuster section **26**, and an opposite end section **28** which can be frusto-conical in shape.

Connection section **22** can be shaped as a spiral or threaded section which includes at least one spiral shaped or a plurality of spiral shaped threads which extend in a substantially helical manner to form a substantially solid connection end. Connection section **22** is configured to connect to gasket **16.1**. As indicated above, gasket **16.1** forms a screw receptacle, which is essentially a threaded opening for receiving the connection section. Connection section **22** is therefore configured to be screwed into gasket **16.1**. Alternative connection interfaces for connection section **22** and for gasket **16.1** are also available. For example, a snap-in connection is also available for a connection between camera **20** and body **11**.

FIG. **2** shows an alternative view which is a front end perspective view of the body **11** with the camera **20** being configured to connect to the body. This view shows gasket **16.1** which is fit into hole **16.2** which has threads **16.3**. Camera **20** is configured to screw into gasket **16.1** such that threaded section **22** screws into threads **16.3**. This view also shows that side or back surface **12.5** along with sides **12.1**, **12.2**, **12.3**, and **12.4** create a five sided tray or receptacle **11.1** for receiving a portable electronic device **21** (See FIG. **4**A) such as a portable viewing screen, a portable camera system,

or a portable mobile telephone. This receptacle **11.1** is configured to receive this electronic device with a snap-fit connection because sides **12.1**, **12.2**, **12.3**, and **12.4** have a rounded corner connection **15.1** and rounded front ends **15.2**. Rounded front ends **15.2** extend inward either substantially along longitudinal axis **19.1** or latitudinal axis **19.2** to create an at least partially enclosed housing for the electronic device. In at least one embodiment housing or body **11** is constructed from a flexible material such as plastic or rubber configured to bend or stretch to receive the electronic device. This bending or stretching allows the electronic device to be snapped into the housing or body **11** with a snug connection so that it holds the electronic device while still allowing for selective eventual removal of the electronic device.

FIG. **3** is another back perspective view of the embodiment comprising a device **10**. In this view, there are sides **12.1**, **12.2**, **12.3**, **12.4**, and back surface **12.5**. Camera connection **22** fits into gasket **16.1** along longitudinal axis **19.3**. Holes **17.1**, **17.2** and **17.3** are shown inside of side **12.4**. Button **14** is shown on side **12.2** as well. Button **18** is shown on side **12.1**. Hole **13** is shown inside **12.3**. Rounded edges **15.1** and rounded surface **15.2** are shown connecting the sides together.

FIG. **4**A shows a top cross-sectional view of a door **118** for receiving the device while, FIG. **4**B shows the device **10** coupled therein. For example, this view shows the connection of the device **10** coupled to a door **118**. Door **118** includes a hole **118.4**, which allows camera **20** to slide therein. Axis **19.3** indicates an extension line for the extension of the camera **20** which extends through hole **118.4**.

Door **118** can also include a hinge **118.1** a power line **118.2**, and an optional electrical connector **118.3**. Line **118.2** can be coupled through hinge **118.1**. Thus, power from a wall feed can be fed into door **118** and then provided to an electrical component mounted on the door.

This view also shows that an electronic component such as a handheld device **21** can be pushed or moved along axis **19.5** into receptacle **11.1** to fit inside the housing or body **11**. If the electronic component has an internal camera or receiver for receiving images, this opening would be configured to line up to the lens/camera device **20**.

FIG. **4**B shows a top cross-sectional view of the door **118** with the device **10** all assembled in the door **118** with camera/lens **20** inserted into hole **118.4** (See FIG. **4**A) and receptacle **11.1** ready to receive electronic device **21**.

FIG. **4**C shows the side cross-sectional view of the door **118**. In addition, there is shown an embodiment of device **10**, which includes receptacle **11.1** along with lens/camera **20**. Lens/camera **20**, is shown inserted into opening **118.4** (see FIG. **4**A).

FIG. **5**A shows a door **118** with a different embodiment of an electronic device **110** coupled thereto. Electronic device **110** includes a base **114** coupled to the door **118**. In addition, there is a cable **119**, which is coupled to a camera **116**. A screen **111** is shown facing substantially parallel to door **118**. Screen **111** is mounted on an arm **112** which is coupled to base **114**.

FIG. **5**B shows the opposite side of door **118**, which includes eyehole **120**. Eyehole **120** allows camera **116** access to the other side of door **118**. In this way, users who are standing on this side of the door, can be seen by camera **116**.

With this design, as with the other designs, the camera **116** and the screen **111**, can be separate from each other with the camera and the screen being powered separately from each other. In addition, with this design, the camera and the screen, or other device can communicate wirelessly with each other.

FIG. **6** is a view of a cable **140**. This cable **140**, can be used in place of cable **119**. Cable **140** includes a coupling or grommet section **142**. Extending off of coupling or grommet section **142** is a pigtail comprising a Wifi antenna **144**, and a cable section **146**. Thus, this Wifi antenna **144** can be used to allow the camera to communicate wirelessly with other devices. Extending out of the opposite end of grommet **142**, is an end of the cable **148**. Cable **148**, can be coupled to a power cable, as well as have a data feed. Alternatively, Wifi antenna **144** which can be in the form of a pigtail can be configured as a data feed cable that is separable from a power cable **146**. In that way, electronic device, such as electronic device **21**, or electronic device **110**, or electronic device **150** (See FIG. **7**) can be coupled to a cable such as cable **119**, or cable **140**.

FIG. **7** is a perspective view of another embodiment of an electronic device **150** which is an integrated electronic device. Integrated electronic device **150** includes a screen **152**, as well as a body section **154**. Body section **154** includes faces **154.1**, **154.2**, **154.3** (See FIG. **8**). Body section **154**, is configured to house a set electronic components which can include, screen controls for screen **152**, as well as camera controls for camera/lens **160**. In addition, embedded in housing or body section **154** is a grommet or receptacle **156** which fits into hole or opening **155**. This receptacle can be a threaded or a screw receptacle which is configured to receive a screw in connection such as connection **162** from the camera or lens. Receptacle **156** includes an opening **155** for receiving the screwing connection **162**. Connection end **162** is a threaded connection for screwing into grommet or receptacle **156**.

Camera/lens **160** includes a lens section **163**, a focus in section **164**, which allows the user to focus the lens, and an aperture opening **166**. Camera/lens **160** can be screwed into receptacle **156** in a secure type connection such that it is configured to support body **154** as well as screen **152** when camera/lens **160** is secured to a door.

FIG. **8** is an exploded view of the device shown in FIG. **7**. For example, there is a multilayer screen section **152.1** and **152.2**, which comprises a front panel **152.1** and a pixel section **152.2**. Section **152.3** is the base or body section for the electronic device which can fit all the additional electronic components for controlling both the screen as well as camera. Sides **134.1**, **154.2**, and **154.3** are also shown. In addition, opening **155** is shown in configured to receive grommet or receptacle **156**.

FIG. **9** is a side view of another embodiment of the camera **170** coupled to electronic device **150**. Camera **170** includes and a rotatable lens **172** for coupling to electronic device **150**, and a connection end **173** for connecting to lens **172**. There is also lens housing **174**, an end **175** to lens housing, and an extension end **176**. For the remaining part of the camera, extension **176** is threaded so that when it is rotated it allows for adjustment for optical focusing.

FIG. **10** shows camera section **170**, coupled to electronic device **150** of the electronic device. In addition, camera/lens **170** can also be coupled to the embodiment, which includes body **11**, in the alternative.

FIG. **11** is another embodiment of another camera which can be separate from the screen element. For example, this camera **180** includes a cable **182**, the camera body or base section **184**, a lens section **185**, a focal adjuster **186**, and a

lens section **188**. This camera, as indicated is separate from the electronic screen but is coupled to the electronic screen via cable **182**.

FIG. **12** is a side view of the electronic device **150**. Electronic device **150** includes screen **152** and body **154**. Coupled body **154** is second arm **194**. Coupled the second arm **194** is first arm **192**. First arm **192** is coupled to base **190**. Base **190** is configured to be coupled to a door such as door **118**. Base **190** can be coupled to a door via any known manner such as through an adhesive, screws, or any other known coupling means. Coupled to body section **154** is a cable **182**. Cable **182** is part of camera **180**. Camera **180** includes a base section **184**, and a focal adjuster **186**.

Alternatively, another type of camera **200** is shown. This camera **200** can be used instead of camera **180**. This camera includes a cable **201**, a body section **202**, and lens cover section **203**. This camera is substantially smaller camera and can be coupled directly to a keyhole or an eyelet of the door, in a more compact manner.

For example, as shown in FIG. **13** camera **200** includes body section **202**, cable **201**, lens **204**, and lens cover, **203**. There is also a lens seat, **206** which is configured to receive lens **204**. Lens **204** also includes an adjusting arm **205**, which allows for the focusing or focal adjustment of lens **204**.

FIG. **14** shows another embodiment which shows an exploded view of the camera **210**. Camera **210** includes a body section **211**, a lens **212**, a lens seat **213**, a focal adjuster **214**, and a lens extension **215**. Camera body **211** is coupled to a cable **211.1**, which is coupled to electronic device, such as electronic device **150**.

Also shown, in this view is coupling element **193** which includes base **190**, and arm assembly **191** which includes first arm **192**, and second arm **194**. There is also shown pivot **197** which is coupled to both first arm **192** and second arm **194**.

FIG. **15** shows a view of camera **210** assembled. In addition, this view also **22** shows a rotatable pivot joint **195**, which allows for adjustment the ball joint **196**. Ball joint **196** is coupled to first arm **192** which is coupled pivot joint **197** (See FIG. **17**). As disclosed above pivot joint **197** is coupled to a second arm **194**, which is coupled to the electronic device **150**.

FIG. **16** shows a view of camera **200**, including camera body **202**, camera cable **201**, coupled to electronic assembly **150** which can also be coupled to arm assembly **191**.

FIG. **17** is a side view of arm assembly **191** coupled to electronic device **150**. As disclosed above, arm assembly **191**, includes a first arm **192**, a second arm **194**, a pivot joint **197**, a rotatable pivot joint **195**, and a ball joint **196**. Rotatable pivot joint **195**, is rotatable about an axis **195.1** which can selectively secure rotation via the ball joint **196**. In addition, pivot joint **197**, can be selectively tightened as well. Thus, with this design arm assembly **191** allows for a near universal or universally adjustable joint for selectively orientating electronic device **150**. Ball joint **196** allows for virtually omnidirectional movement between base **190** and device **150**. Thus, this arm assembly **191** allows for users to view screen associated electronic device **150** at nearly any selected angle and at different elevations as well.

FIG. **18** discloses a different embodiment, which include a first embodiment, which includes electronic device **150** which is coupled to an adjustable arm **220**. Adjustable arm **220** comprises an arm section which is a substantially triangular arm section.

Substantially triangular arm section has a plurality of pivot joints including first connection section such as pivot joints **224**, **222**, and **223**. Pivot connection **224**, allows for rotational adjustment of the electronic device **150** relative to arm **220**. Pivot joints **223** and **222** allow for coupling to a different connection such as to a door or other type mechanism which allow for rotation about either of these connection joints.

FIG. **19** shows a front view of the view shown in FIG. **18**. In this view, there is shown camera body **202**, electronic device **150** which shows a screen, cable **201**, as well as coupling arm **220** coupled to another electronic device **150** wherein coupling arm **220** includes pivot arm **221**.

FIG. **20** discloses another embodiment, which includes base **190**, associated with coupling element or camera arm **193** electronic assembly **150**, cable **182**, camera assembly **210**, which includes the associated lenses and focal adjuster **214**.

FIG. **21** is a view of another embodiment of a frame for holding the camera and screen assembly for use with a wall or a door. In this embodiment, there is shown a body section **345*a***. A hole **347** is positioned in body section **345*a*** to allow a camera to shine through the hole. In addition there are wings **346*a*** and **346*b*** which can be formed using curves to allow a device such as a screen/camera combination to fit therein. In addition, there are attachment elements such as attachment elements **349*a*** and **349*b*** which are coupled to the body section **345*a***. Wings **346*a*** and **346*b*** form channels that extend along longitudinal axis **345*c*** and are disposed on either side of this longitudinal axis **345*c***. In addition, a latitudinal axis **345*b*** extends along the width of the frame. A bottom section **348** also forms a catch or a channel much like the channels formed by wings **346*a*** and **346*b***. This device is then configured to hold a combination screen and camera device such as a portable smart phone or a portable tablet.

FIG. **22** is a view of a first embodiment device **355** of a camera **356** and screen assembly **350**. This type of assembly includes a screen body **352** which in this embodiment is shown from a side view. The screen body **352** extends along a longitudinal axis **350*b*** and also along a latitudinal axis **350*a***. In addition, a camera shaft **354** is coupled to one side of the camera body **356**. This camera shaft **354** serves as an extension extending the connection of a camera **356** to the screen body. The connection between the camera **356** and the screen body **352** can be either through a wired connection extending along shaft **354** or through a wireless connection communicating with the screen body. In this embodiment, the extension of the screen body **352** along the longitudinal axis **350*b*** is longer than the depth of the screen body **352** extending along the latitudinal axis **350*a***.

FIG. **23** is a view of another embodiment of a screen assembly **360** of a camera frame and assembly. In this embodiment, there is a screen body **352** which is connected to a cable **358** which is coupled to a camera **362** at another end of the cable. In this embodiment, the camera is not fixed in a shaft, but rather free to be fixed to another environment. The cable **358** is at least in one embodiment flexible and movable so that the camera **362** can be positioned in different positions on a wall. This cable **358** and camera **362** assembly can fit inside shaft **354** as well.

FIG. **24**A is a view of the camera and frame and assembly coupled to a door. For example, the embodiment shown discloses a door **420** which extends along a longitudinal axis **420*a*** and along a latitudinal axis **420*c***. Longitudinal axis **420*a*** extends along the length of the door while latitudinal axis **420*c*** extends along the depth of the door. A hole **421** is formed in the door which allows the camera or shaft to be positioned therein.

FIG. **24**B shows a side view of a device which is a combination of a camera and a screen. In this view there is a screen device **355** and a camera **353** attached to the screen device. This type of device is used with the embodiment of FIG. **25**.

FIG. **25** is a view of the scope **430** for use with the embodiment shown in FIGS. **24**A and **26**A. This scope **430** is shown so that it can be positioned adjacent to or attached to a camera portion of a camera/display module such as that shown in FIG. **25**. Other examples of camera/display modules are shown as well in FIGS. **24**A and **24**B. In this view, there is shown a scope **430** which includes an eyepiece or oculus **426** which is shown coupled to a camera piece **453**. A flange **428** extends out from a body section as well. While the eyepiece or oculus **426** is shown as frusta-conical in shape it could be in any suitable shape. One or more lenses **431** and/or **434** are disposed inside of this tube body **432**. These lenses are used to refract the image so that the image from the camera **453** is not distorted when entering or leaving the opening **440**. In addition, and if necessary, mirrors or reflective surfaces **435** are present in the inside walls of the tube **432** to further reflect the light and to focus the image inside the tube **432** so that the image continues to extend down the tube. An additional flange **438** is disposed opposite to flange **428**. A dividing line **433** indicates that the device can be telescoping in length depending on the depth of the door. Each end can therefore be separated so that each end can be put in at each side of the door. The flanges **428** and **438** can be used to secure this device to each respective side of the door.

Because each end is bounded by a flange, the flanges **428** and **438** can be individually secured to the door via screws or other fastening devices and then the device can be slid together inside of the door such that one end telescopes inside of the other inside of the door. Alternatively, the device can be slid into the door first as one piece and then the flanges can be attached after the device is slide inside of the door.

FIG. **26**A shows the embodiment shown in FIGS. **23**, **24**A, **24**B, and **25** coupled to a door **420**. In this view, there is a frame **370** which is used to couple a device/screen assembly **350** or **360** to the frame **370**. The frame **370** is configured to be adjustable in height and width so that it can fit any suitable type screen assembly of any suitable size. The adjustability of this type of frame is based upon the frame being telescoping in at least one direction such as either in a width or latitudinal axis dimension along axis **420***b* or along a length or longitudinal axis **420***a*.

While the frame shown in FIG. **26**A is one example, the frame shown in FIG. **26**B is another example showing a frame that is telescoping with a first base **371**, a second section or piece **372** coupled to base **371** and slidable along this base. There is a third piece **373** which is slidable vs piece **372**. Second section or piece **372** is slidable vs. first section or base **371** along the longitudinal axis **420***a*, while third section or piece is slidable vs. the second section or piece **372** along the latitudinal axis **420***b*.

FIG. **27**A is a side view of the screen assembly **350** and **360** mounted on the door **420**. Frame **370** is shown mounted on the door and holding the screen assembly **350** and **360**. Camera **362** or **356** scope **430** is shown extending out on the other side of the door **420**. As shown in this view there is a hole **421** cut in the door which allows for cables or for the camera to extend there-through.

FIG. **27**B shows a plug **490** which is in the form of a hollow cylinder which can be inserted through a door. The plug **490** can be inserted into a hole in the door and be used to feed a line or cable such as cable **358** there-through. In addition, a camera such as any one of cameras **356**, **362**, or scope **430** is configured to fit into eye piece **493** and be secured therein. On the opposite end, eyepiece **491** is configured to receive the cable from the screen. These eyepieces **491** and **493** can be made from any suitable material such as rubber, plastic, metal or composite. The body of the plug **490** is made from a cylinder **491** which is coupled at one end to eyepiece **491** and at the other end to eyepiece **493**. This body extends along a longitudinal axis **494** from eyepiece **491** to eyepiece **493**. These eyepieces **491** and **493** can be attached after cylindrical body **495** is slid through a hole either in a door or a body of an object such as the frame of a motor vehicle, a boat or an airplane. While the body **495** is shown as a cylinder, other shapes for body **495** can be used as well. FIG. **28** is a view of the door. In this view there is shown the scope or camera **356**, **362** or camera scope **490** extending out to an exterior section of the door **420**. The door as shown in this view extends along longitudinal axis **420***a* and along latitudinal axis **420***b*. A doorknob is shown **380** wherein this doorknob is shown coupled to the door and configured to allow the door to be opened or closed.

Thus, this device is configured to provide additional views to users so that the user has additional viewing angles so that the user does not have too many or even any blind spots.

FIG. **29** discloses a new embodiment **505** which includes a screen assembly **510**, a camera assembly **580**, and a channel **570** connecting the camera assembly **580** with the screen assembly **510**. Screen assembly **510** includes at least a screen body **512**, and a screen itself **511**. Screen **511**, is housed inside of screen body **512**. Behind screen **511**, are electronic components shown in FIG. **36**. A cable **520** can be coupled to screen assembly **510** through a port not shown herein. This cable can supply power such as power over Ethernet (POE) or any other power or communication line as is suitable.

Thus, with this design, camera assembly **580** can be positioned on one side of a door while the screen assembly **510** can be positioned on the opposite side of the door. Channel **570** then extends through the door to bridge between the two assemblies.

FIG. **30** shows a side perspective exploded view of the device shown in FIG. **29**. For example, in with this embodiment **505**, there is shown screen assembly **510** with screen **511** disposed inside of screen housing or body **512**. As with FIG. **29**, there is a cable **520** coupled to a bottom section of the screen. A coupling bracket **550** includes a bracket body, as well as at least four different bracket prongs **552**, **553**, **554**, and **555**. These bracket prongs extend out from the bracket body that are formed as substantially L-shaped hooks.

These substantially L-shaped hooks are configured to hook inside of a back face of the screen body. In addition, a screw **558** is coupled to coupling bracket **550**. In addition, disposed inside of coupling bracket **550** is a cable slot **559**. Cable slot **559** is configured to receive a cable **560**. Cable **560** is configured to be coupled to the electronic components shown in greater detail in FIG. **36**. Cable **560** extends inside of channel **570** to camera assembly **580**. A screw hole **571** in channel **570** is configured to receive screw **558**. Thus, cable **560** can slide through cable slot **559**, wherein cable **560** is then connected to the electronic components inside of the screen housing or body **512** of screen assembly **510**. In addition, screw **558** can be screwed into screw hole **571** to

secure camera assembly **580** to connection bracket **550**. Connection bracket **550**, can then be coupled to screen body **512** as shown in FIG. **31**.

FIG. **31** shows a side-back perspective view of the embodiment shown in FIG. **29**. In this view, connection bracket **550** is shown fitting into slot or recessed receptacle **521**. As shown in this view, channel **570** is shown extending from camera assembly **580**. Camera assembly **580** includes a camera **581**, a camera face **582** and side walls **583**. Camera assembly **580** can also include a covering such as a glass or transparent covering. As shown, there is also a screw **558** that connects channel **570** to bracket **550**. In addition, as shown, there are also backing screws **515**, **516**, **517**, and **518** which connect the body **512** to a front plate **512***a*. In addition, as shown, there is a card **530** which extends into an opening **530***a* which connects card **530** to the motherboard which is housed inside of body **512**. The connection bracket **550** is fit snugly inside of recessed receptacle **521**.

FIG. **32** is a side exploded view which is similar structure shown in FIG. **31**. In this view there is shown bracket **550** is shown removed from screen body **512**. Prongs **554**, and **553** are shown extending out from bracket **550** wherein these prongs **553**, and **554** can be configured to extend into prong openings such as prong openings **522.1**, **522.2**, **522.3**, and **522.4**. Cable **560** can extend in through slot **559** and then extend through opening **524**.

FIG. **33**A is a back view of the camera body which shows a connection bracket having a cable slot **559** and screw **558**. FIG. **33**B shows a front view of the camera body **580** which includes a camera **581**, a back camera plate **582**, and annular or substantially circular side walls **583**. FIG. **33**C shows a side view of the camera body **580**, and channel **570** which is coupled to camera body **580**. A screw **558** which extends back from channel **570** and extends out to bracket **550** to support bracket **550** extending substantially rigidly from channel **570**. Cable **560** extends from channel **570** and provides a direct link between the camera and the motherboard of the main electronic assembly. The walls of this camera can be made flush with the door, or curved to be made tamper proof so that the camera does not have any flat surfaces which would make it easy to tamper with.

FIG. **34** is a back view of the screen assembly **510** (See FIG. **32**). In this view, there are screw holes **525**, **526**, **527**, and **528**. There are prong openings **522.1**, **522.2**, **522.3** and **522.4** which are configured to receive prongs. In addition, opening **524** is also shown. Furthermore, opening **529** is also configured to receive a cable **520**.

FIG. **35** is a front view of the housing bracket with the screen not disposed therein. This bracket or middle body **512** includes sides **531**, **532**, **533**, and **534**. There are screw holes **541**, **542**, **543**, and **544**, which are configured to receive screws **515**, **516**, **517**, and **518** (See FIG. **32**). In addition, there is an open back **535**, which is configured to receive back plate **522.5**.

FIG. **36** is an outside view of a door assembly **700** which includes a camera assembly **709** which is equivalent to camera assembly **580**. Door assembly **700** includes a door frame **701**, and a door itself **705**. Disposed on the opposite side of the door, there is shown a switch **702** which include a power cable **703** which can extend in a channel of door frame **701**. This cable **704** can be used to power camera **709**. In addition, power cable **708** which extends out from power cable **703** then extends to a sensor housing **707**. Sensor housing **707** is configured to house sensor **718**. In addition, there can be a doorbell **712** which can be coupled to power cable **708** as well. Camera is essentially a camera that represents any of the cameras disclosed herein.

FIG. **37** is an inside view of a door which shows a screen housing **710**. Screen housing **710** is configured to house any type of a screen such as screen assembly **510**.

The associated screen is configured to receive power from power cable or line **704**. Thus, this door assembly is configured to allow the system to communicate in a closed environment which allows for a door assembly to be weather resistant which can have a camera which can be configured to have a night vision or infrared view.

FIG. **38** shows another embodiment which shows an electromechanical device **706***a* which is configured to unlock a door such as door **705**. This electro mechanical door unlocking device **706***a* is powered from cable **704** and is configured to selectively automatically unlock door **705** based upon either biometric authentication or facial recognition software which is powered by camera **711**. In addition, in this embodiment, both sides of the door have a screen **710** and an associated camera **711**. Disposed on the side of the door are projectors **740** and **742** which can also or in the alternative project the image of the person being viewed in the camera. Screen housing **710** and camera **711** are similar or substantially similar to the screen housing **510** and camera **581** combination.

FIG. **39** shows a side view of door **705** of this type of embodiment. With this embodiment, there are two sets of screen and camera combinations. With this design, there is a first screen **710***a* and a first camera **711***a* and a second screen **710***b* and a second camera **711***b*. Each of these screen and camera combinations are configured to be coupled to door **705** via an adjustable arm **712***a* and **712***b* respectively. Thus, each of these screen and camera combinations can be rotated so that the screen and camera combination can be viewed and used by any person of any height.

Alternatively, instead of a screen, the camera can be coupled to a projector **744** (See FIG. **38**) to allow for viewing of the user on the other side of the door. The projector **744** can be displayed on the door itself, or on an adjacent wall or in another region of the home. In this view, there can also be at least one or a plurality of projectors.

FIG. **39**A is a side cross-sectional view of a camera for use with the screens or displays disclosed herein. With this view, there is a camera **720** which is a camera that can be automatically controlled by a button or joystick or a plurality of buttons on a screen such as the screens disclosed herein. This camera is shown embedded in a door such as door **735**. The front part of the frame of the door **733** is configured to hold the camera in place. Outer shell **721** is coupled to the front part of the frame of the door **733**. Inner shell **722** is disposed inside of outer shell **721**. A plurality of wheels **728** and **729** which are positioned transverse to each other are configured to drive the inner shell **722** around inside of outer shell **721**. A drive body **730** is configured to drive wheels **728** and **729**. A camera chip much like camera chip **801** described below is configured to receive visual information. A camera seat **731** is coupled to camera body **726** which is configured to house much of the camera electronics. A cable or line **727** is coupled to the outer shell and this cable **727** passes electrical and communication information into camera chip **725**.

Essentially, the drive body includes an electrical motor which drives wheels **728** and **729** to drive the angle of attack of the camera to different directions. These different directions can be up, down, left, right or any other suitable direction. The user who may be positioned on the other side of the door can then use the touch screen such as touch

screen **111** (See FIG. **5**A), or the touch screen of electronic device **150**, or screens **511** or **710** for example to control this type of camera.

FIG. **39**B is a view of another embodiment **736** which includes a screen device **737**, having a screw connection **741** connected to a back end. There is a double ended joint **743** coupled thereto, this double ended joint would be a ball and socket joint which allows for near universal movement of the screen **737**.

Similarly, FIGS. **39**C-**39**H show adjustable body section **786**, which includes clamp **768**, and clamp arm **768.1**. When clamp **768** is rotated in a predetermined manner it drives clamp arm **208.1** into clamp body section **786**.

FIGS. **39**C through **39**H show different views of adjustable section **750** with first body part **755.1** and second body part **755.2** removed. As shown in these views, there are a plurality of ball joints **756**, and **758**, positioned within a clamp seat **757**. As clamp arm **768.1** is driven into clamp seat **757**, it exerts pressure on ball joints **758**, and or **756** which one position within first body part **785.1**, and second body part **785.2**, respectively. This clamps the ball joint in a fixed position. Essentially, because there are two ball joints which are movable within the ball seat **757**, this creates a multidimensional, easily adjustable device which allows for positioning of the screen and almost any angle and in nearly any position. This omnidirectional double ball joint system is similar to that shown in FIG. **39**B. An additional coupling arm **767** is coupled to a coupling end **778** which is configured to be coupled to a mount or base such as base **190** (See FIG. **15**) and then tightened into place via screw **788.1**, and clamped via clamping elements **777** and **779**.

FIG. **40** shows one embodiment which may be a preferred embodiment which is a block diagram of the electronic components which comprise any of the screens in combination with any one of the cameras disclosed herein, as well as any other suitable electronic components. The apparatus includes camera chip **801**, CPU **802**, data converter **803**, display driver chip **804**, LCD display **805**, flash chip **806** and micro SD Card **807** which can include card **530** shown in FIG. **31**.

Camera chip **801** is one of several types. In the current embodiment, the chip provides an integrated lens, 640*480 full color pixel array sensor, control electronics, an 8 bit data output bus and a control bus. CPU **802** sends commands to the camera chip to initialize it and to control the capture and format of data.

Typically, one of several formats can be chosen for the representation of full color images. CPU **802** selects a format that is compatible with display driver **804** to reduce the amount and convolution of data required to display a good image.

Data from the camera chip is ported to both CPU **802** and to the display driver chip **804**, via data converter **803**. The display driver **804** can accept data in several widths (8 bit, 16 bit, 24 bit) and formats (RGB656, RGB 565 RGB888, etc). The current embodiment programs camera chip **801** to send image data in the RGB656 or RGB 565 format, which consists of 2 bytes containing 5 bits of red color information, 6 bits of green color information and 5 bits of blue color information. Display driver **804** can accept this data in 16 bit format; since the camera chip outputs the data in 8 bit widths, data converter **803** is used to convert the 8 bit data into 16 bit RGB656 format data. Display driver **804** contains sufficient memory to store at least 1 frame of display data.

The display driver **804** has many registers to control the appearance of the LCD display **805**, so it is connected to CPU **802** using the same bus as data converter **803**. CPU **802** programs these registers before beginning the image display and also writes a command to display driver **804** at the start of every display frame to describe where the forthcoming data from data converter **803** is to be displayed on LCD display **805**.

A frame of data is defined by signals VSYNC and HSYNC and CPIXCLK. VSYNC is set high when an image frame is to be output from camera chip **801**. Each line of the image is qualified by HSYNC which goes high when valid pixel data is available on the data outputs of camera chip **801**. HSYNC goes low when the line of data ends and signals that a new line of data is about to begin. CPIXCLK pulse high for each byte of data sent by camera chip **801**. CPU **802** can either accept this data to save frame(s) to micro SDCard **807**, or can send this data to display driver chip **804** via data converter **803**.

The sequence of events required to capture and display an image frame is this: CPU **802** monitors signal VSYNC from camera chip **801**. When VSYNC is detected high by CPU **802**, CPU **802** programs display driver **804** with the addresses of the data that is to be written to the LCD display. Once this is programmed CPU **802** activates data converter **803**. Data converter **803** accepts HSYNC and CPIXCLK and uses these signals, along with the data signals from the camera chip to assemble a 16 bit wide RGB656 word and subsequently write that word to display driver chip **804**. Display driver chip **804** takes these RGB656 and stores them sequentially into its internal frame memory. Display driver chip **804** uses the frame memory to generate the signals DVSYNC, DHSYNC, PIXCLK and the 24 bit data (8 bits each of red, green and blue) for display on LCD display **805**.

CPU **802** continues to monitor signal VSYNC from camera chip **801**. When VSYNC goes low, the frame has been completed and CPU **802** turns the data converter off and begins looking for a new frame of data. When CPU **802** sees VSYNC go high again it starts the display sequence again. This provides full motion data from the camera to be displayed on the LCD display **805**.

LCD Display **805** incorporates a touch screen interface for the apparatus. This interface permits the user to capture an image or a video from the camera chip to micro SDCard **807**. This image can be used for identification or verification of events. Flash chip **806** holds images that can be displayed on a portion of LCD display **805** and includes virtual buttons or physical buttons, help instructions, or general information for the operation of the apparatus. CPU **802** can generate information that can be displayed on LCD screen **805** instead of video or as an adjunct to the video display. In addition coupled to CPU are other optional components.

For example, the optional components include a WIFI chip **809** which can be used to allow the camera and CPU **802** to communicate with another computer network. In addition there can be a battery **810**. There is also an Ethernet connection port **811** which is coupled to CPU **802**. Other optional components can include a sensor **818**. Sensor **818** can be any one of the following sensors: RFID sensor, a motion sensor, a door ajar sensor, a fingerprint scanner, a thermal sensor, and a proximity sensor alarm. In addition there is also shown a sim card **816**, and a biometric reader **817**. There can also be an audio speaker or a microphone **821** wherein the users can communicate between each other by communicating using the audio speaker and a corresponding microphone. This audio speaker and microphone can be embedded into the screen assembly **510**.

In all, there is shown, multiple different embodiments. These embodiments allow for the user to have a screen which allows the user to have greater visibility while view-

ing through a door. This screen can be associated with any suitable electronic components such as for example, a simple screen assembly, a smart phone, a camera screen, or any other type of electronic device suitable for use with a camera. In addition, multiple different cameras are shown connected to this electronic device. For example, a simple camera assembly such as camera **200** can be used. Alternatively, more complex camera assembly such as camera similar to camera **210**, having worked collocated lens assemblies can also be used.

FIG. **40**A shows a block diagram for a design for a camera which can be an example of a camera that can be used as any of the above mentioned cameras such as cameras **100**, **120** and substituted for the corresponding components in FIG. **37**. For example, there is an embodiment **830** which has a camera chip and discrete lens **831** which is coupled to and in communication with a central processing unit (CPU) **832**. This CPU **832** is coupled to a ram storage **833**, and also to external or removable storage in the form of an external flash **836**, and an optional micro SDCard **837**. In addition, coupled to the CPU and in communication with this CPU is a display driver chip **834** which is also in communication with an LCD display **835**. LCD display is also in communication with CPU as well. The pictures as well as motion video can be recorded either in memory on the memory **801** of computer **800** or it can be recorded on the SD Card **837** or on the external flash **836**.

The camera can be a CMOS e2v camera with any suitable resolution such as HD resolution of 1280×1024, an 8 bit resolution depth and 1.3 megapixel in memory. The Sensor model can be a EV&6560BB or EV76560B. The lens can have a focal length of 4.2 mm and a relative aperture of F3.0 to create a relative sensor size of 1/2.5 " with a total length of approximately 21.50 mm with an angle of view of 69 degrees ×51 degrees.

An example of the lens is shown in FIG. **40**B which shows a lens **840** with its holder or mount **841** having a mount size of M12×0.5 mm. It is noted that this camera and lens system is simply one embodiment which is a preferred embodiment but the claims are not to be limited to any of the specifications cited herein.

FIG. **41** A shows a layout of a connection of these electronic components to a computer network. Computer network **900** can be coupled either with in a wired or wireless manner to the electronic devices such as electronic device **150**. Computer network **900** includes at least one server **910** which is in communication with an electronic device such as electronic device **150** through router **905**. Server **910** is configured as a base recording server for recording, any activity that is suitable to be viewed on any of the electronic devices such as electronic device **150**. In addition projectors **740**, **742**, and **744** can be coupled to this network **900** as well so that information from the camera can be transmitted to the projector.

FIG. **41**B shows a layout of a more complex computer network. In this view there is shown a remote electronic device **915** which is coupled to or in communication with router **905**. With this type of connection, remote electronic device can display the view provided by electronic device **150** either through an intranet connection or an internet connection. In addition, projectors **740**, **742**, and **744** can be coupled to this network **900** as well so that information from the camera can be transmitted to the projector.

FIG. **42** is a view of a more complex computer network. In this network, any one of cameras can be in communication with router **905**. Coupled to router **905** is any one of servers **910** or **911**. For example, server **910** can be in the form of a mass storage server while server **911** can be in the form of an application server as well. This application server is configured to provide management applications to control the viewing and recording of the cameras **20**, **116**, **200**, and/or **210**. In addition, there is shown remote electronic devices **915**, **916**, or handheld device **21** which are/can be coupled to router **905** for communication with router **905**. In at least one embodiment, handheld device **21**, is coupled to lens/camera **20** for recording purposes. As described above, handheld device **21** can be any suitable handheld electronic device such as a screen, or a smart phone which is configured to be coupled to lens/camera **20**. In addition projectors **740**, **742**, and **744** can be coupled to this network **900** in a wired or wireless manner as well so that information from the camera can be transmitted to the projector. In this way information from one or more projectors can be segmented and selectively displayed on a surface such as a door.

Each of these components can communicate with each other via a wired connection. Alternatively each of these components such as the cameras **20**, **116**, **160**, **170**, **180**, **200**, **210**, **356**, and **357**, **580**, **709**, **720** are configured to contain a wireless transceiver such as **20***i*, **116***i*, **200***i*, **210***i*, **355***i*, and **357***i* which provides these cameras the ability to communicate with any other wireless components such as a computer server or a screen. Thus each screen can also communicate in a wireless manner with any one of the other electronic components such as the cameras or other servers. These electronic devices can include but are not limited to handheld device/screens **20**, **110**, **150**, **356**, **360**, **505** and **710**. These screens have corresponding wireless transceivers **20***i*, **110***i*, **150***i*, **356***i*, and **360***i*. The communication for these components can be via wireless internet protocols such as WIFI, cellular, SIM, or bluetooth or any other suitable wireless communication protocol.

Turning now in detail to FIG. **43**, there is shown a new embodiment **1000** which includes a modified hinge **1002**. Modified hinge **1002** includes a cover **1004** that can be made from any suitable material such as, but not limited to rubber, plastic silicone, a composite, or any suitable metal. Hinge **1002** includes a first part **1002***a* which is coupled to a doorframe, and hinge **1002***b* which is coupled to the door itself. Extending along an interior of door **1006** is a cable or line **1008** which extends from hinge **1002** to electronic device **1010**.

FIG. **44** shows hinge **1002** which does not include cover **1004**. In this view, there is shown cable **1008** which extends from inside of doorframe **1012** to door **1006**. Cable **1008** can be a low voltage cable which can be insulated which runs in a channel such as channel **1014** inside of hinge **1002**. This cable **1008** can extend to an electronic device such as electronic device **1016**. Electronic device **1016** is slightly different than electronic device **1010** because this includes an additional battery pack **1017** which is coupled to the electronic device **1016** via a snap-on or clip-on connection **1015**.

FIG. **45**A shows a side view of another type hinge wherein this hinge includes a first part **1018** and a second part **1019**. First part **1018** is connected to a doorframe while second part **1019** is connected to a door side portion **1024** of door **1026**. In this view, there is a cable cover **1030** which includes a cover such as a rubber gasket cover or any other suitable type cover and which includes grommets **1032**, and **1034**. Grommet **1034** forms a grommet type connection or opening in doorframe **1022**. Gasket or grommet **1034** is coupled to an inside portion **1024** of door **1026**. Thus inside of this cable channel is a line such as cable **1008**. Cable **1008** then would run from the doorframe to the electronic device

1016 which is coupled to door 1026. This cable 1008 can be connected to a standard power line and also this line can also include communication cables or lines as well.

FIG. 45B is a side cross-sectional view of a gasket such as gasket 1034 along with cover 1030 having walls 1033, and 1035 shown therein coupled to ring 1034. Thus, this design creates a compression seal between the walls and the ring with the walls being compressed by the ring.

FIG. 46A shows a side-back perspective view of another embodiment. In this embodiment, there is a connector 1050 which include screw holes 1051 and 1053. Screw holes 1051, and 1053 are configured to allow for a screw to connect this connector 1050 to a door or wall surface. In addition, extending from this connector 1050 is a prong connection 1052. Prong connection 1052 has a hook which is configured to be inserted inside of a receptacle 1042 which is formed within a housing 1044. Housing 1044 is attached to electronic device 1040. This housing 1044 can be molded with a housing of electronic device 1040 or it can be attached thereto via an adhesive connection or any other means known in the art.

FIG. 46B shows a side-back perspective view of another embodiment. In this view, there is connector 1050 which include screw holes 1051 and 1053. In addition, this connector 1050 includes prong connection 1052. In addition, there is also an electrical connection 1049 which extends down to an electrical connection 1054. Electrical connection 1054 is designed to mate with electrical connection 1055 disposed within housing 1044. Thus, when prong 1052 is inserted inside of receptacle 1042 such that prong 1052 is inside of housing 1044, electrical connection 1054 mates with electrical connection 1055 to form an electrical connection and/or communication connection between the two elements. In addition, electric connection 1049 is configured to be connected to a line or cable that can be disposed inside of a wall or a door. This type of connection can be either a snap in connection or a hardwired connection to another cable or powerline or power/communication line.

FIG. 47 shows a front side perspective view of another embodiment. In this embodiment, there is a doorframe 1025 which houses the door 1026. Hinge 1059, connects the door 1026 to doorframe 1025. Coupled to the door 1026 is an electronic device 1016. A spring activated door closure mechanism 1060 is coupled both to frame 1025, and to door 1026.

Door closure mechanism 1060 as shown in FIG. 48 has a line 1061 extending therein. Line 1061 is a communication and/or power line which allows power and communication to extend between doorframe 1025 and door 1026. This line extends into connector 1062 which allows for a housing for connecting line 1061 with any line inside of door 1026 such as cable 1008.

FIG. 49 shows a side-back perspective view of an electronic device 1070. Electronic device 1070 includes a body section 1072 which has a backplate 1074. Backplate 1074 is a ferromagnetic backplate which is configured to receive a connector. In addition, as shown, there is a connector 1085 which includes a plurality of magnetic connections 1082, 1084, and 1086. These magnetic connectors are powered by magnets 1091, 1093 and 1095. Side brackets 1081 and 1083 are configured to allow this connector 1085 to be coupled to a surface such as a wall or a door. Side brackets 1081 and 1083 are configured to receive screws such as screw 1080 therein. These screws such as screw 1080 are configured be screwed into the surface such as a door or a wall. Connector 1085 is configured to be electrically conductive as well as configured to allow communication to pass there-through from connector 1085 to backplate 1074. Thus, there is a line or cable 1090 which extends through shielding or insulated channel 1092 onto camera 1100. Camera 1100 includes a camera head 1102 where the lens is positioned. Camera 1100 can be configured to be stored inside of a door such as door 1026 on one side of the door while electronic device 1070 is positioned on the opposite side of the door. There can also be a data/electrical port formed with magnets 1093 which is coupled to shielding or insulated channel 1092 which allows for connection to an external data or power line such as cable 1008 (see FIG. 45A).

FIG. 50 is a side view of the electronic device 1070 configured to be mounted on a door such as door 1026. Thus, connector 1085 which includes screw such a screws 1080 is mounted to this door 1026. Backplate 1074 on electronic device 1070 is then configured to receive this connector 1085.

FIG. 51A shows a perspective view of another embodiment. In this embodiment, there is shown an electrical connector or plug head 1114 which is essentially a head connection having three different openings 1116, 1117, and 1118 configured to receive associated prongs. Coupled to this electronic plug head 1114 is connection plate 1112. Connection plate 1112 includes a plurality of openings for receiving fasteners such as screws. Coupled to plate 1112 is line or cable 1090. Line or cable 1090 is configured be extend through shielded cover or insulated channel 1092. Shielded cover 1092 is configured to extend inside of camera 1100. Camera 1100 includes a back mounting section 1106 and a head section 1108. Back mounting section 1106 is an adhesive and extends out from head section 1108. This back mounting section 1106 is configured to be applied to a door or wall surface so that the camera can rest on a door or wall surface.

FIG. 51B shows a design similar to that of FIG. 51A, however, in this design there is shown a communication port 1109 which is configured to allow for a separate communication channel from line 1090 into electronic device 1120.

FIG. 52A shows a back perspective view of the embodiment shown in FIG. 51A. In this view, there is shown prongs 1134, 1135, and 1136, of receptacle 1130. Plug head 1114 is insertable into receptacle 1130, wherein prongs 1134, 1135, and 1136 insert into respective openings 1116, 1117, and 1118 shown in FIG. 51A. Receptacle housing 1132 is configured to receive plug head 1114 when the device is snapped in. In addition, there are mating screw holes on the receptacle 1130 which mate with the screw holes on the plug head 1114. These screw holes are screw holes 1115, and 1117 shown in FIG. 52B. Receptacle 1130 also includes electronic connection port 1137 which is configured to receive communication line 1109, once plug head 1114 is plugged into receptacle 1130. FIGS. 52A and 52B also show camera 1100, insulated channel 1092, line or cable 1090, electronic device 1120, and clip 1121. Clip 1121 is for selectively releasably removing a battery pack from electronic device 1120. Alternatively, electronic device 1120 can be powered by a power line.

FIG. 53 shows a side perspective view of another type connection for the electronic device 1120. For example, in this view, there is a cable or line 1116 which connects from the door section to electronic device 1120. In addition, there are two hook and loop fastening pieces 1138, and 1139 which are configured to mate, which then allow the electronic device 1120 to be connected to an associated door 1141.

FIG. 54 shows a front side perspective view of another embodiment for connecting the electronic device housing or

body **1072** and associated door **1073**. For example, there is a flange **1145** which is configured to receive a screw **1143**. This flange **1145** allows the electronic device **1070** to be screwed or coupled directly to a door such as door **1073**. In addition, this electronic device **1070** includes electronic device body **1072**, as well as a clip **1121** which allows battery pack **1071** to be selectively removed, or attached thereto.

FIGS. **55**A and **55**B show two different embodiments for electrically connecting the door with an outer structure such as a doorframe. For example, doorframe **1162** can have a cable such the power cable **1008** running through it driving power to electronic device **1070** which is housed on door **1152**. Thus, power and/or communication line can be sent through channel **1150**. Channel **1150** includes a first grommet **1158**, an accordion style cover **1156**, and an opposite grommet **1160** coupled to door **1152**. There is also a hinge **1154** for coupling door **1152** to frame **1162**. Channel **1150** allows power and/or communication lines to pass from doorframe **1162** to door **1152** through an in-door channel such as channels **1165** or **1167**. This power line and/or communication line can then pass towards electronic device **1070**. Power cable **1008** is configured to run from frame **1162** through channel **1150** through door **1152** into electronic device **1070**. Thus, with these embodiments, it shows how the cover **1156** having a channel can be placed either above or below hinge **1154**.

FIG. **56** shows another embodiment which shows hinge **1170** which has an arm **1166** which extends to a ring holder **1169**. Ring holder **1169** encircles cover **1156** which is an accordion type cover which extends from a first grommet to an opposite second grommet. First grommet **1164** is coupled to a frame such as frame **1161**. A second grommet **1164** is coupled to an associated door such as door **1171**. Thus, an electrical and/or communication line can pass from frame **1161**, to door **1171**. This line would then power an electronic device such as electronic device **1070**.

FIGS. **57**A, **57**B, **58**A, **58**B and-**59** show a top side perspective view of another embodiment **1180**. In this view there is an electronic device **1182** which has a shaft **1184** having a thread **1186**. Thread **1186** is configured to receive a thread receptacle **1188** on camera **1190**. In addition, there is a data and electrical port **1193** shown in FIG. **59** which is configured to mate with a corresponding data and electrical connection inside of thread receptacle **1188** in camera **1190**. Camera **1190** has a body section **1192**.

FIGS. **60**A, **60**B and **60**C show a projector system **1200** (See FIG. **60**A) which can be used to project an image rather than presenting a screen. Projector system **1200** includes a projector **1201** and a projector arm **1202**. Projector arm **1202** is coupled to frame **1204** and is configured to pass a line **1203** such as a communication and/or power line from frame **1204** to projector **1201**. The size of the projected image which is shown as a varying size is set by the focus of the lens on the projector **1201** as well as the distance that the projector **1201** is positioned from the door **1205**.

FIG. **61** shows another side of door **1205** which shows associated camera **1214** which is connected to projector system **1200** via a line such as line **1203** or via a wireless connection. Thus, the image seen by camera **1214** is projected through projector **1201** onto door **1205** allowing the user to see the image that is viewed by camera **1214**.

FIG. **62**A shows another embodiment which shows an independent projector **1220** which is a ceiling mounted projector which is configured to show an image on a door such as door **1205**. This independent projector **1220** can be mounted on a ceiling or wall and receive a signal such as through wireless transmission from an associated camera such as camera **1214** positioned on door **1205**.

FIG. **62**B shows another embodiment showing a pull down screen such as screen **1229** which can be pulled down from roller **1223**. Thus, the image can be projected on a screen rather on a door. Alternatively screen **1229** can be applied to door **1222** via an adhesive or any other suitable fastening system.

FIG. **63** shows another embodiment of a projector system **1250** which includes a projector arm which is configured to be coupled to a door frame such as frame **1262**.

The arm includes a mounting base **1251** and a hinge **1252**. There is a first arm section **1254** coupled to hinge **1252**. A second hinge **1256** is coupled to first arm **1254**. A second arm **1258** is coupled to second hinge **1256**. Second hinge **1256** thus is a dual hinge having one end coupled to first arm **1254** and a second end coupled to second arm **1258**. Coupled to the end of second arm **1258** is another hinge **1257** which is also a dual hinge as well. Dual hinge **1257** has a first hinge end coupled to arm **1258** and a second end coupled to projector **1260**. There is also shown a cable **1259** which extends from the door frame **1262** to projector **1260**. Projector **1260** can then be adjusted in terms of distance from door **1205** to control the size of the image projected on door **1205**. With this design having multiple hinges and even multiple dual hinges, the projector such as projector **1260** can be positioned and adjusted in many different angles and distances from the door creating a substantially adjustable viewing image on a door.

Ultimately, this system can be designed to include a camera which can be configured to have a night vision camera, and an infrared sensor.

Accordingly, while at least one embodiment of the present invention has been shown and described, it is obvious that many changes and modifications may be made thereunto without departing from the spirit and scope of the invention.

What is claimed is:

1. An apparatus configured to view people through a door comprising:

at least one mount;

at least one electronic device comprising a display configured to be coupled to said at least one mount; and

at least one camera coupled to the electronic device;

wherein said at least one mount comprises at least one coupling element for coupling said at least one electronic device to said at least one mount and wherein said at least one mount is configured to allow the electronic device to be mounted on a surface;

at least one telescoping scope coupled to said at least one camera and to said at least one electronic device, said at least one telescoping scope configured to be adjustable in length and to extend through the door from an inside surface of the door to an outside surface of the door wherein said camera and said at least one electronic device are positioned on an inside surface of the door; and

at least one power line extending through the door and into a wall and coupled at one end to at least one of said at least one electronic device and said at least one camera at one end and to a wall feed at an opposite end.

2. The apparatus as in claim **1**, wherein the at least one electronic device comprises a screen and a display housing and wherein said at least one coupling element comprises a bracket which comprises a plurality of prongs, and wherein said plurality of prongs are configured to fit into said at least on display housing to selectively couple said at least one camera to said at least one display housing.

3. The apparatus as in claim 1, wherein said at least one mount further comprises a body configured to receive said at least one electronic device.

4. The apparatus as in claim 1, further comprising at least one adjustable arm.

5. The apparatus as in claim 4, wherein said at least one adjustable arm comprises a ball and socket joint.

6. The apparatus as in claim 1, wherein said at least one camera further comprises at least one lens assembly.

7. The apparatus as in claim 6, wherein said at least one lens assembly further comprises at least one screw connection.

8. The apparatus as in claim 7, wherein said at least one mount further comprises at least one screw receptacle for receiving at said at least one screw connection.

9. The apparatus as in claim 8, further comprising at least one screw, coupled to said at least one bracket, wherein said at least one screw is configured to couple said at least one bracket to said at least one camera.

10. The apparatus as in claim 9, wherein said at least one display housing further comprises a plurality of recesses configured to receive said plurality of prongs configured to fit inside of said at least one display housing.

11. The apparatus as in claim 10, wherein said bracket has at least one hole which is configured to receive at least one cable from said at least one camera.

12. The apparatus as in claim 11, wherein said screw is configured to selectively screw into said at least one bracket to selectively space said at least one camera from said at least one bracket.

13. The apparatus as in claim 12, wherein said prong on said bracket is substantially L-shaped.

14. The apparatus as in claim 13, wherein said at least one display is rotatable about said at least one mount.

15. The apparatus as in claim 1, wherein said at least one mount is electrically coupled to cabling inside of a door.

16. The apparatus as in claim 15, wherein said at least one camera is configured to move in an omnidirectional manner.

17. The apparatus as in claim 1, wherein said power line is disposed in a channel which extends through the wall and the door.

18. The apparatus as in claim 1, further comprising a hinge coupled to the wall and the door, wherein the hinge has an opening such that the channel extends through said hinge.

19. A device for viewing through a door and configured to receive power from a power line comprising:

a) a display positioned on a first side of the door;

b) a camera coupled to an opposite side of the door; and

c) at least one power cable extending through a wall and the door for powering said at least one camera said power cable being coupled to a power line comprising a wall feed;

at least one mount, adapted to couple said display to the door, wherein said mount comprises:

at least one double ended ball joint, configured to allow said display to be adjusted in a multi-dimensional manner;

at least one clamp, having a screw, wherein said screw of said at least one clamp extends transverse to said double ended ball joint;

at least one telescoping scope coupled to said at least one camera and to said at least one electronic device, said at least one telescoping scope configured to be adjustable in length and to extend through a door from an inside surface of the door to an outside surface of the door wherein said camera and said at least one electronic device are positioned on an inside surface of the door;

at least one sensor comprising a biometric sensor coupled to said at least one power cable.

20. The device as in claim 19, wherein said display is a screen and wherein said screen and said camera are powered by said at least one power cable.

21. The device as in claim 20, further comprising a projector wherein said projector projects a display on a surface.

22. The device as in claim 21, wherein said projector is positioned above the door and is configured to project the display on the door.

23. The apparatus as in claim 19, wherein said power line is disposed in a channel which extends through the wall and the door.

24. The apparatus as in claim 19, further comprising a hinge coupled to the wall and the door, wherein the hinge has an opening such that the channel extends through said hinge.

* * * * *