US010192464B2

(12) **United States Patent**
Edwards et al.

(10) **Patent No.: US 10,192,464 B2**
(45) **Date of Patent: Jan. 29, 2019**

(54) **MEDICAMENT DELIVERY DEVICE CONFIGURED TO PRODUCE WIRELESS AND AUDIBLE OUTPUTS**

(71) Applicant: **kaleo, Inc.**, Richmond, VA (US)

(72) Inventors: **Eric S. Edwards**, Moseley, VA (US); **Evan T. Edwards**, Charlottesville, VA (US); **Mark J. Licata**, Doswell, VA (US); **Paul F. Meyers**, Fishers, IN (US); **David A. Weinzierl**, Andover, MN (US)

(73) Assignee: **kaleo, Inc.**, Richmond, VA (US)

(*) Notice: Subject to any disclaimer, the term of this patent is extended or adjusted under 35 U.S.C. 154(b) by 933 days.

(21) Appl. No.: **14/148,268**

(22) Filed: **Jan. 6, 2014**

(65) **Prior Publication Data**

US 2014/0309616 A1 Oct. 16, 2014

Related U.S. Application Data

(63) Continuation of application No. 13/234,649, filed on Sep. 16, 2011, now Pat. No. 8,622,973, which is a (Continued)

(51) **Int. Cl.**
G09B 23/28 (2006.01)
A61M 5/20 (2006.01)
(Continued)

(52) **U.S. Cl.**
CPC ..... ***G09B 23/285*** (2013.01); ***A61M 5/2053*** (2013.01); ***A61M 5/3157*** (2013.01); (Continued)

(58) **Field of Classification Search**
CPC A61M 5/3157; A61M 2005/206; A61M 2005/2073; A61M 2205/43;
(Continued)

(56) **References Cited**

U.S. PATENT DOCUMENTS

2,277,907 A 3/1942 Goodale, Jr. et al.
2,960,087 A 11/1960 Uytenbogaart
(Continued)

FOREIGN PATENT DOCUMENTS

AU 2004231230 6/2006
EP 1113700 A2 7/2001
(Continued)

OTHER PUBLICATIONS

Office Action for U.S. Appl. No. 13/550,893, dated Apr. 28, 2015.
(Continued)

Primary Examiner — Brandy S Lee

(57) **ABSTRACT**

An apparatus includes a simulated medicament delivery device and an electronic circuit system. The simulated medicament delivery device includes a housing, and is devoid of a medicament delivery mechanism that causes a medicament to be delivered. The electronic circuit system is coupled to the housing and includes an audible output device and a cover. The housing of the medicament delivery device and the cover of the electronic circuit system collectively define an acoustic enclosure. The audible output device is configured to be disposed within the acoustic enclosure.

23 Claims, 36 Drawing Sheets

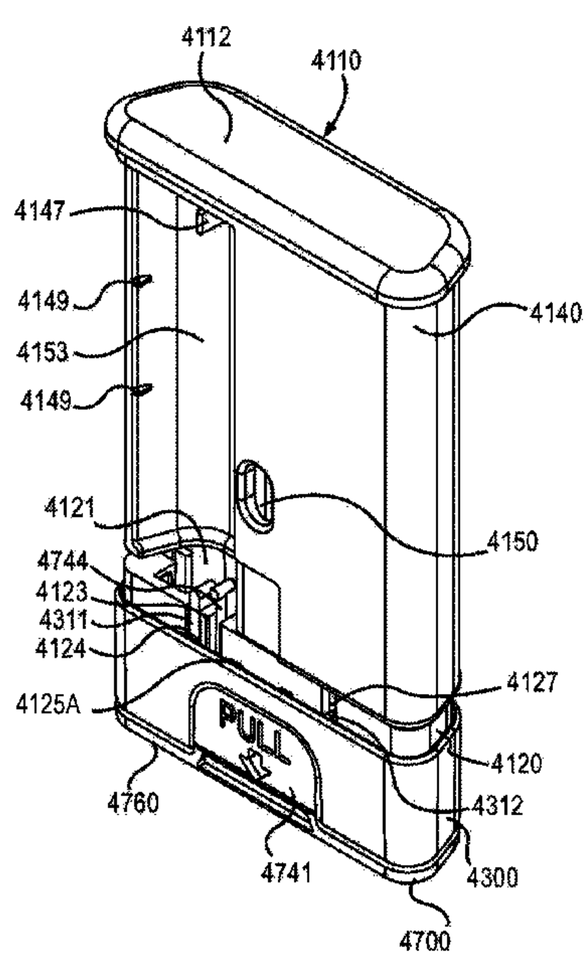

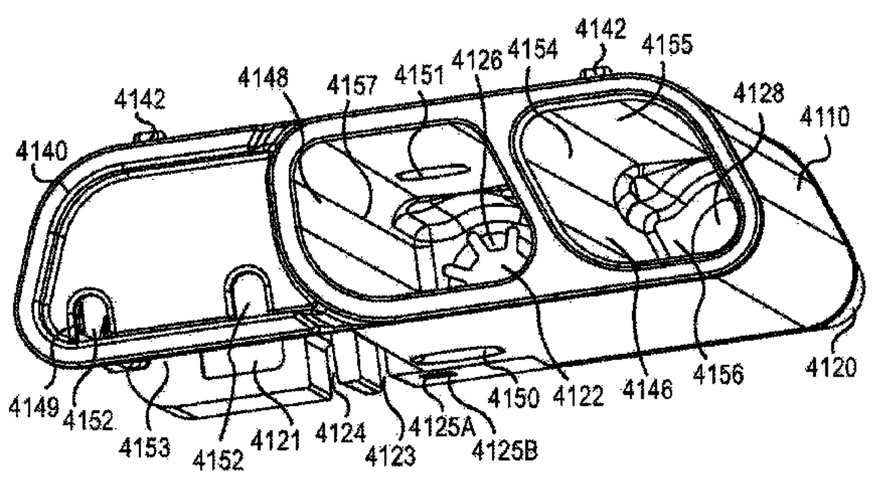

Related U.S. Application Data

continuation of application No. 12/180,708, filed on Jul. 28, 2008, now Pat. No. 8,021,344.

(51) **Int. Cl.**

A61M 5/315	(2006.01)
A61M 15/00	(2006.01)
H04R 1/02	(2006.01)
A61M 5/32	(2006.01)
A61M 5/50	(2006.01)

(52) **U.S. Cl.**

CPC ***A61M 15/00*** (2013.01); ***H04R 1/028*** (2013.01); *A61M 5/3202* (2013.01); *A61M 5/5086* (2013.01); *A61M 15/009* (2013.01); *A61M 2005/206* (2013.01); *A61M 2005/2073* (2013.01); *A61M 2205/43* (2013.01); *A61M 2205/50* (2013.01); *A61M 2205/581* (2013.01); *A61M 2205/583* (2013.01); *A61M 2205/8206* (2013.01); *A61M 2209/06* (2013.01)

(58) **Field of Classification Search**

CPC A61M 2205/581; A61M 2205/50; A61M 2205/583; A61M 5/5086; A61M 2205/276; A61M 15/00; A61M 15/009; A61M 2205/8206; A61M 2209/06; A61M 5/2053; A61M 5/3202; A61M 11/06; A61M 2205/3561; A61M 2205/3592; A61M 2205/52; A61M 2205/582; G09B 23/28; G09B 23/285; G09B 19/00; H04R 1/028

See application file for complete search history.

(56) **References Cited**

U.S. PATENT DOCUMENTS

3,055,362	A	9/1962	Uytenbogaart
3,115,133	A	12/1963	Morando
3,426,448	A	2/1969	Sarnoff
3,688,765	A	9/1972	Gasaway
3,768,472	A	10/1973	Hodosh et al.
3,795,061	A	3/1974	Sarnoff et al.
3,945,379	A	3/1976	Pritz et al.
4,360,019	A	11/1982	Portner et al.
4,424,057	A	1/1984	House
4,441,629	A	4/1984	Mackal
4,484,910	A	11/1984	Sarnoff
4,524,243	A	6/1985	Shapiro
4,573,976	A	3/1986	Sampson et al.
4,596,556	A	6/1986	Morrow et al.
4,610,666	A	9/1986	Pizzino
4,617,557	A	10/1986	Gordon
4,624,660	A	11/1986	Mijers et al.
4,640,686	A	2/1987	Dalling et al.
4,643,721	A	2/1987	Brunet
4,666,430	A	5/1987	Brown et al.
4,673,657	A	6/1987	Christian
4,689,042	A	8/1987	Sarnoff et al.
4,693,708	A	9/1987	Wanderer et al.
4,795,433	A	1/1989	Sarnoff
4,822,340	A	4/1989	Kamstra
4,826,489	A	5/1989	Haber
4,853,521	A	8/1989	Claeys et al.
4,874,382	A	10/1989	Lindemann et al.
4,894,054	A	1/1990	Miskinyar
4,906,235	A	3/1990	Roberts
4,915,695	A	4/1990	Koobs
4,941,880	A	7/1990	Burns
4,959,056	A	9/1990	Dombrowski et al.
4,968,302	A	11/1990	Schluter et al.
4,983,164	A	1/1991	Hook et al.
5,000,736	A	3/1991	Kaufhold, Jr. et al.
5,024,656	A	6/1991	Gasaway et al.
5,037,306	A	8/1991	van Schoonhoven
5,038,023	A	8/1991	Saliga
5,041,088	A	8/1991	Ritson et al.
5,062,603	A	11/1991	Smith et al.
5,064,413	A	11/1991	McKinnon et al.
5,071,353	A	12/1991	van der Wal
5,085,642	A	2/1992	Sarnoff et al.
5,092,843	A	3/1992	Monroe et al.
5,125,898	A	6/1992	Kaufhold, Jr. et al.
5,167,641	A	12/1992	Schmitz
5,199,949	A	4/1993	Haber et al.
5,224,936	A	7/1993	Gallagher
5,240,146	A	8/1993	Smedley et al.
5,279,514	A	1/1994	Lacombe et al.
5,281,198	A	1/1994	Haber et al.
5,286,258	A	2/1994	Haber et al.
5,298,023	A	3/1994	Haber et al.
5,312,326	A	5/1994	Myers et al.
5,314,406	A	5/1994	Arias et al.
5,314,412	A	5/1994	Rex
5,343,519	A	8/1994	Feldman
5,344,407	A	9/1994	Ryan
5,354,284	A	10/1994	Haber et al.
5,356,376	A	10/1994	Milijasevic et al.
5,363,842	A	11/1994	Mishelevich et al.
5,380,281	A	1/1995	Tomellini et al.
5,383,851	A	1/1995	McKinnon, Jr. et al.
5,394,866	A	3/1995	Ritson et al.
5,399,163	A	3/1995	Peterson et al.
5,399,823	A	3/1995	McCusker
5,417,660	A	5/1995	Martin
5,466,217	A	11/1995	Myers et al.
5,505,192	A	4/1996	Samiotes et al.
5,544,647	A	8/1996	Jewett et al.
5,558,679	A	9/1996	Tuttle
5,567,160	A	10/1996	Massino
5,568,555	A	10/1996	Shamir
5,569,192	A	10/1996	van der Wal
5,584,815	A	12/1996	Pawelka et al.
5,610,992	A	3/1997	Hickman
5,615,771	A	4/1997	Hollister
5,616,132	A	4/1997	Newman
5,642,731	A	7/1997	Kehr
5,645,534	A	7/1997	Chanoch
5,662,612	A	9/1997	Nichoff
5,692,492	A	12/1997	Bruna et al.
5,695,476	A	12/1997	Harris
5,697,916	A	12/1997	Schraga
5,716,338	A	2/1998	Hjertman et al.
5,728,074	A	3/1998	Castellano et al.
5,740,794	A	4/1998	Smith et al.
5,752,235	A	5/1998	Kehr et al.
5,772,635	A	6/1998	Dastur et al.
5,792,190	A	8/1998	Olson et al.
5,800,397	A	9/1998	Wilson et al.
5,805,423	A	9/1998	Wever et al.
5,809,997	A	9/1998	Wolf
5,813,397	A	9/1998	Goodman et al.
5,823,346	A	10/1998	Weiner
5,832,488	A	11/1998	Eberhardt
5,846,089	A	12/1998	Weiss et al.
5,848,988	A	12/1998	Davis
5,852,590	A	12/1998	de la Huerga
5,853,292	A	12/1998	Eggert et al.
5,868,713	A	2/1999	Klippenstein
5,868,721	A	2/1999	Marinacci
5,925,021	A	7/1999	Castellano et al.
5,928,195	A	7/1999	Malamud
5,941,857	A	8/1999	Nguyen et al.
5,954,641	A	9/1999	Kehr et al.
5,964,739	A	10/1999	Champ
5,970,457	A	10/1999	Brant et al.
5,971,953	A	10/1999	Bachynsky
6,002,781	A	12/1999	Takayama et al.
6,015,438	A	1/2000	Shaw
6,030,363	A	2/2000	Kriesel
6,039,713	A	3/2000	Botich et al.
6,045,534	A	4/2000	Jacobsen et al.
6,062,901	A	5/2000	Liu et al.

(56) **References Cited**

U.S. PATENT DOCUMENTS

6,063,053 A 5/2000 Castellano et al.
6,074,213 A 6/2000 Hon
6,077,106 A 6/2000 Mish
6,084,526 A 7/2000 Blotky et al.
6,086,562 A 7/2000 Jacobsen et al.
6,119,684 A 9/2000 Nöhl et al.
6,144,310 A 11/2000 Morris
6,158,613 A 12/2000 Novosel et al.
6,165,155 A 12/2000 Jacobsen et al.
6,175,752 B1 1/2001 Say
6,179,812 B1 1/2001 Botich et al.
6,190,326 B1 2/2001 McKinnon et al.
6,193,695 B1 2/2001 Rippstein, Jr.
6,200,289 B1 3/2001 Hochman et al.
6,202,642 B1 3/2001 McKinnon et al.
6,219,587 B1 4/2001 Ahlin et al.
6,245,046 B1 6/2001 Sibbitt
6,249,717 B1 6/2001 Nicholson et al.
6,258,063 B1 7/2001 Haar et al.
6,259,654 B1 7/2001 de la Huerga
6,264,629 B1 7/2001 Landau
6,270,455 B1 8/2001 Brown
6,277,098 B1 8/2001 Klitmose et al.
6,285,757 B1 9/2001 Carroll et al.
6,297,737 B1 10/2001 Irvin
6,317,630 B1 11/2001 Gross et al.
6,321,070 B1 11/2001 Clark et al.
6,323,780 B1 11/2001 Morris
6,334,070 B1 12/2001 Nova et al.
6,364,866 B1 4/2002 Furr et al.
6,371,939 B2 4/2002 Bergens et al.
6,387,078 B1 5/2002 Gillespie, III
6,398,760 B1 6/2002 Danby
6,411,567 B1 6/2002 Niemiec et al.
6,425,897 B2 7/2002 Overes et al.
6,428,517 B1 8/2002 Hochman et al.
6,428,528 B2 8/2002 Sadowski
6,475,181 B1 11/2002 Potter et al.
6,478,769 B1 11/2002 Parker
6,478,771 B1 11/2002 Lavi et al.
6,482,185 B1 11/2002 Hartmann
6,500,150 B1 12/2002 Gross et al.
6,514,230 B1 2/2003 Munk et al.
6,529,446 B1 3/2003 de la Huerga
6,530,900 B1 3/2003 Dailey et al.
6,530,904 B1 3/2003 Edwards et al.
6,535,714 B2 3/2003 Melker et al.
6,539,281 B2 3/2003 Wan et al.
6,540,675 B2 4/2003 Aceti et al.
6,544,234 B1 4/2003 Gabriel
6,551,276 B1 4/2003 Mann et al.
6,551,298 B1 4/2003 Zhang
6,554,798 B1 4/2003 Mann et al.
6,558,320 B1 5/2003 Causey, III et al.
6,560,471 B1 5/2003 Heller
6,569,123 B2 5/2003 Alchas
6,572,584 B1 6/2003 Shaw et al.
6,574,166 B2 6/2003 Niemiec
6,575,939 B1 6/2003 Brunel
RE38,189 E 7/2003 Walker et al.
6,585,698 B1 7/2003 Packman et al.
6,589,158 B2 7/2003 Winkler
6,589,229 B1 7/2003 Connelly et al.
6,595,956 B1 7/2003 Gross et al.
6,597,794 B2 7/2003 Cole et al.
6,633,796 B1 10/2003 Pool et al.
6,659,980 B2 12/2003 Moberg et al.
6,676,630 B2 1/2004 Landau et al.
6,679,862 B2 1/2004 Diaz et al.
6,689,093 B2 2/2004 Landau
6,702,778 B2 3/2004 Hill et al.
6,707,763 B2 3/2004 Osberg et al.
6,708,050 B2 3/2004 Carim
6,723,077 B2 4/2004 Pickup et al.
6,726,661 B2 4/2004 Munk et al.
6,736,796 B2 5/2004 Shekalim
6,743,635 B2 6/2004 Neel et al.
6,749,437 B2 6/2004 Chan
6,752,781 B2 6/2004 Landau et al.
6,767,336 B1 7/2004 Kaplan
6,770,052 B2 8/2004 Hill et al.
6,770,056 B2 8/2004 Price et al.
6,783,509 B1 8/2004 Landau et al.
6,786,885 B2 9/2004 Hochman et al.
6,793,646 B1 9/2004 Giambattista et al.
6,803,856 B1 10/2004 Murphy et al.
6,805,686 B1 10/2004 Fathallah et al.
6,808,514 B2 10/2004 Schneider et al.
6,809,653 B1 10/2004 Mann et al.
6,817,986 B2 11/2004 Slate et al.
6,839,304 B2 1/2005 Niemiec et al.
6,872,200 B2 3/2005 Mann et al.
6,923,764 B2 8/2005 Aceti et al.
6,936,029 B2 8/2005 Mann et al.
6,937,150 B2 8/2005 Medema et al.
6,942,646 B2 9/2005 Langley et al.
6,945,961 B2 9/2005 Miller et al.
6,946,299 B2 9/2005 Neel et al.
6,949,082 B2 9/2005 Langley et al.
6,952,604 B2 10/2005 DeNuzzio et al.
6,953,693 B2 10/2005 Neel et al.
6,958,691 B1 10/2005 Anderson et al.
6,959,247 B2 10/2005 Neel et al.
6,961,285 B2 11/2005 Niemiec et al.
6,964,650 B2 11/2005 Alexandre et al.
6,969,259 B2 11/2005 Pastrick et al.
6,979,316 B1 12/2005 Rubin et al.
6,979,326 B2 12/2005 Mann et al.
6,985,870 B2 1/2006 Martucci et al.
6,997,911 B2 2/2006 Klitmose
7,072,738 B2 7/2006 Bonney et al.
7,074,211 B1 7/2006 Heiniger et al.
7,102,526 B2 9/2006 Zweig
7,104,972 B2 9/2006 Moller et al.
7,113,101 B2 9/2006 Peterson et al.
7,116,233 B2 10/2006 Zhurin
7,126,879 B2 10/2006 Snyder
7,158,011 B2 1/2007 Brue
7,191,916 B2 3/2007 Clifford et al.
7,229,458 B2 6/2007 Boecker et al.
7,278,983 B2 10/2007 Ireland et al.
7,299,981 B2 11/2007 Hickle et al.
7,343,914 B2 3/2008 Abrams et al.
7,416,540 B2 8/2008 Edwards et al.
7,544,188 B2 6/2009 Edwards et al.
7,648,482 B2 1/2010 Edwards et al.
7,648,483 B2 1/2010 Edwards et al.
7,682,155 B2 3/2010 Raven et al.
7,731,686 B2 6/2010 Edwards et al.
7,731,690 B2 6/2010 Edwards et al.
7,749,194 B2 7/2010 Edwards et al.
7,871,393 B2 1/2011 Monroe
7,938,802 B2 5/2011 Bicknell et al.
7,947,017 B2 5/2011 Edwards et al.
8,021,344 B2 9/2011 Edwards et al.
8,123,719 B2 2/2012 Edwards et al.
8,149,111 B2 4/2012 Monroe
8,172,082 B2 5/2012 Edwards et al.
8,206,360 B2 6/2012 Edwards et al.
8,212,658 B2 7/2012 Monroe
8,226,610 B2 7/2012 Edwards et al.
8,231,573 B2 7/2012 Edwards et al.
8,424,517 B2 4/2013 Sutherland et al.
8,544,645 B2 10/2013 Edwards et al.
8,556,865 B2 10/2013 Krulevitch et al.
8,556,867 B2 10/2013 Krulevitch et al.
8,622,973 B2 1/2014 Edwards et al.
8,690,827 B2 4/2014 Edwards et al.
8,899,987 B2 12/2014 Edwards et al.
8,926,594 B2 1/2015 Edwards et al.
2001/0005781 A1 6/2001 Bergens et al.
2002/0000225 A1* 1/2002 Schuler A61M 15/00
128/200.14
2002/0016567 A1 2/2002 Hochman et al.

(56) **References Cited**

U.S. PATENT DOCUMENTS

2002/0074345	A1	6/2002	Schneider et al.	
2002/0076679	A1	6/2002	Aman	
2002/0079326	A1	6/2002	Fuchs	
2002/0090601	A1	7/2002	Strupat et al.	
2002/0096543	A1	7/2002	Juselius	
2003/0028145	A1	2/2003	Duchon et al.	
2003/0040717	A1	2/2003	Saulenas et al.	
2003/0060765	A1	3/2003	Campbell et al.	
2003/0065536	A1	4/2003	Hansen et al.	
2003/0106824	A1	6/2003	Wilmot et al.	
2003/0120212	A1	6/2003	Dedig et al.	
2003/0130853	A1	7/2003	Maire	
2003/0132128	A1	7/2003	Mazur	
2003/0135388	A1	7/2003	Martucci et al.	
2003/0233070	A1	12/2003	De La Serna et al.	
2004/0015125	A1	1/2004	Alexandre et al.	
2004/0019326	A1	1/2004	Gilbert et al.	
2004/0039336	A1	2/2004	Amark et al.	
2004/0039337	A1	2/2004	Letzing	
2004/0039368	A1	2/2004	Reilly et al.	
2004/0054327	A1	3/2004	Gillespie, III	
2004/0069667	A1	4/2004	Tomellini et al.	
2004/0143298	A1	7/2004	Nova et al.	
2004/0159364	A1	8/2004	Landau et al.	
2004/0210199	A1	10/2004	Atterbury et al.	
2004/0220524	A1	11/2004	Sadowski et al.	
2004/0225255	A1	11/2004	Ono	
2004/0267204	A1	12/2004	Brustowicz	
2005/0027255	A1	2/2005	Lavi et al.	
2005/0033234	A1	2/2005	Sadowski et al.	
2005/0033386	A1	2/2005	Osborn et al.	
2005/0062603	A1	3/2005	Fuerst et al.	
2005/0090781	A1	4/2005	Baba et al.	
2005/0134433	A1	6/2005	Sweeney, II	
2005/0137530	A1	6/2005	Campbell et al.	
2005/0150488	A1	7/2005	Dave	
2005/0168337	A1	8/2005	Mahoney	
2005/0171477	A1	8/2005	Rubin et al.	
2005/0182358	A1	8/2005	Veit et al.	
2005/0183982	A1	8/2005	Giewercer	
2005/0190941	A1	9/2005	Yang	
2005/0197654	A1	9/2005	Edman et al.	
2005/0203466	A1	9/2005	Hommann et al.	
2005/0209558	A1	9/2005	Marx	
2005/0209569	A1	9/2005	Ishikawa et al.	
2005/0261742	A1	11/2005	Nova et al.	
2005/0267403	A1	12/2005	Landau et al.	
2005/0273059	A1	12/2005	Mernoe et al.	
2006/0030819	A1	2/2006	Young et al.	
2006/0053036	A1	3/2006	Coffman et al.	
2006/0058848	A1	3/2006	Piraino et al.	
2006/0074519	A1	4/2006	Barker et al.	
2006/0089592	A1	4/2006	Kadhiresan et al.	
2006/0169773	A1	8/2006	Lyons et al.	
2006/0189938	A1	8/2006	Hommann et al.	
2006/0204939	A1	9/2006	Bardsley et al.	
2006/0247578	A1	11/2006	Arguendas et al.	
2006/0265186	A1	11/2006	Holland et al.	
2007/0008113	A1	1/2007	Spoonhower et al.	
2007/0074722	A1	4/2007	Giroux et al.	
2007/0111175	A1	5/2007	Raven et al.	
2007/0129708	A1*	6/2007	Edwards	A61M 5/19 604/890.1
2007/0149954	A1	6/2007	Hood et al.	
2007/0184847	A1	8/2007	Hansen et al.	
2007/0186923	A1	8/2007	Poutiatine et al.	
2007/0210147	A1	9/2007	Morrone et al.	
2007/0213598	A1	9/2007	Howard et al.	
2007/0239116	A1	10/2007	Follman et al.	
2007/0239140	A1	10/2007	Chechelski et al.	
2007/0260210	A1	11/2007	Conroy	
2007/0285238	A1	12/2007	Batra	
2007/0285258	A1	12/2007	Hartman	
2008/0059133	A1	3/2008	Edwards et al.	
2008/0111685	A1	5/2008	Olson et al.	
2008/0147006	A1*	6/2008	Brunnberg	A61M 5/2033 604/136
2008/0160492	A1	7/2008	Campbell et al.	
2008/0228143	A1	9/2008	Stamp	
2008/0230057	A1	9/2008	Sutherland	
2008/0234625	A1	9/2008	Dacquay et al.	
2009/0030285	A1	1/2009	Andersen	
2009/0062728	A1	3/2009	Woo	
2009/0131875	A1	5/2009	Green	
2009/0143761	A1	6/2009	Cantor et al.	
2009/0194104	A1	8/2009	Van Sickle	
2010/0169111	A1	7/2010	Brue et al.	
2010/0192948	A1	8/2010	Sutherland et al.	
2010/0211005	A1	8/2010	Edwards et al.	
2010/0214095	A1	8/2010	Davide	
2010/0250280	A1	9/2010	Sutherland	
2010/0250697	A1	9/2010	Hansen et al.	
2010/0286612	A1	11/2010	Cirillo	
2011/0144574	A1	6/2011	Kamen et al.	
2011/0264033	A1	10/2011	Jensen et al.	
2011/0295215	A1	12/2011	Nielsen et al.	
2012/0052837	A1	3/2012	Reich et al.	
2012/0079718	A1	4/2012	Singer et al.	
2012/0107783	A1	5/2012	Julian et al.	
2012/0233834	A1	9/2012	Szechinski et al.	
2013/0023825	A1	1/2013	Edwards et al.	
2013/0079725	A1	3/2013	Shang	
2013/0266919	A1	10/2013	Baker et al.	
2013/0280687	A1	10/2013	Edwards et al.	
2014/0031789	A1	1/2014	Edwards et al.	
2014/0148783	A1	5/2014	Edwards et al.	
2014/0188048	A1	7/2014	Edwards et al.	
2014/0243749	A1	8/2014	Edwards et al.	
2014/0276385	A1	9/2014	Baker et al.	
2014/0296824	A1	10/2014	Edwards et al.	
2014/0371714	A1	12/2014	Edwards et al.	
2015/0011973	A1	1/2015	Edwards et al.	
2015/0196711	A1	7/2015	Edwards et al.	
2015/0302779	A1	10/2015	Edwards et al.	
2016/0121056	A1	5/2016	Edwards et al.	
2016/0166768	A1	6/2016	Edwards et al.	
2016/0184535	A1	6/2016	Edwards et al.	
2016/0235916	A1	8/2016	Edwards et al.	
2017/0049954	A1	2/2017	Edwards et al.	
2017/0092101	A1	3/2017	Edwards et al.	
2017/0312433	A1	11/2017	Edwards et al.	
2018/0102066	A1	4/2018	Edwards et al.	

FOREIGN PATENT DOCUMENTS

EP	1287840	A1	3/2003
EP	1462134	A1	9/2004
EP	1712178	A2	10/2006
EP	1777984	A1	4/2007
EP	1883268	A2	1/2008
JP	2006-034845		2/2006
WO	WO 95/26009		9/1995
WO	WO 96/25965		8/1996
WO	WO 96/31106		10/1996
WO	WO 98/52632		11/1998
WO	WO 99/10031		3/1999
WO	WO 99/43283		9/1999
WO	WO 2001/024690		4/2001
WO	WO 2001/026020		4/2001
WO	WO 2001/041849		6/2001
WO	WO 2001/088828		11/2001
WO	WO 2001/093926		12/2001
WO	WO 2003/057283		7/2003
WO	WO 2004/041330		5/2004
WO	WO 2005/050526		6/2005
WO	WO 2005/074790		8/2005
WO	WO 2006/045525		5/2006
WO	WO 2006/109778		10/2006
WO	WO 2006/123956		11/2006
WO	WO 2006/125692		11/2006
WO	WO 2007/087304		8/2007
WO	WO 2008/005315		1/2008
WO	WO 2008/008451		1/2008
WO	WO 2008/148864		12/2008

(56) **References Cited**

FOREIGN PATENT DOCUMENTS

WO	WO 2010/114392	10/2010
WO	WO 2013/043063	3/2013
WO	WO 2013/044172	3/2013

OTHER PUBLICATIONS

Office Action for U.S. Appl. No. 14/665,659, dated Jun. 23, 2015.
Office Action for U.S. Appl. No. 15/379,282, dated Feb. 23, 2017.
"Flexible circuits / Flex circuits / Flexible Technology Ltd.," Flexible Technology Limited [online] [retrieved on Aug. 28, 2006] Retrieved from the Internet <URL: http://www.flexibletechnology.com/ >.
"Flexible circuits capabilities of Flexible Technology Limited," Our Flexible Circuits Capabilities [online] [retrieved on Aug. 28, 2006] Retrieved from the Internet <URL: http://www.flexibletechnology.com/Flexible circuits Capability.htm >.
"Flex Circuits/flexible circuits design guide," [online] [retrieved on Aug. 28, 2006] Retrieved from the Internet <URL: http://flexiblecircuit.co.uk/Flex Circuits Design Guide.htm >.
"Anaphylaxis Canada Product Catalogue," Anaphylaxis Canada > Living with Anaphylaxis > Tools and Resources [online] [retrieved on Jan. 24, 2007] Retrieved from the Internet <URL: http://anaphylaxis.org/content/livingwith/productcatalogue.asp >.
"Merck Serono Launches easypod(R), First Electronic Growth Hormone Injection Device," Jan. 30, 2007 [online] [retrieved on Feb. 5, 2007] Retrieved from the Internet <URL: http://www.biz.yahoo.com/prnews/070130/ukm028.html?.v=8.
CliniSense Corporation, "Drug delivery devices a potentially harsh environment for drugs," Stability [online] [retrieved on Jun. 1, 2007] Retrieved from the Internet <URL: http://www.clinisense.com/devices.htm>.
CliniSense Corporation, "LifeTrack Technology a new method to detect improper storage." Stability [online] [retrieved on Jun. 1, 2007] Retrieved from the Internet <URL: http://www.clinisense.com/tech.htm>.
Meridian Medical Technologies, Inc., "Pralidoxime Chloride Trainer," 2006. [retrieved on Feb. 16, 2007] Retrieved from the Internet <URL: http://www.meridianmeds.com/auto-injectors/2pamcl_trainer.html/>.
Gosbee, L. L., "Nuts! I Can't Figure Out How to Use My Life-Saving Epinephrine Auto-Injector," Joint Commision Journal on Quality and Safety, 30(4):220-223 (Apr. 2004).
Amgen, "Using Aranesp prefilled SureClick autoinjector is a simple 3-step process," 2006. [retrieved on Feb. 16, 2007] Retrieved from the Internet <URL: http://www.aranesp.com/patient/cia/sureclick/using_three_steps.jsp/>.
International Search Report and Written Opinion for International Patent Application No. PCT/US06/03415, dated Jul. 13, 2006, 10 pages.
Office Action for Japanese Patent Application No. 2009-502964, dated May 21, 2012 (English Translation).
Office Action for U.S. Appl. No. 11/679,331, dated Feb. 15, 2011.
English Translation of Office Action for Chinese Patent Application No. 200980124254.1, dated Oct. 30, 2012.
International Preliminary Report on Patentability for International Patent Application No. PCT/US2009/043578, dated Nov. 17, 2010.
Search and Examination Report for British Patent Application No. 1213906.9, dated Sep. 21, 2012.
Examination Report for British Patent Application No. 1213906.9, dated Jan. 14, 2013.
Office Action for U.S. Appl. No. 13/924,037, dated Feb. 13, 2014.
Office Action for U.S. Appl. No. 12/017,405, dated Dec. 7, 2011.
Office Action for U.S. Appl. No. 12/180,708, dated Feb. 28, 2011.
Non-Final Office Action for U.S. Appl. No. 13/234,649, dated May 28, 2013.
Knapp, Louise. "A Faster Way to Call 911," Wired.com [online], [retrieved Jul. 26, 2017] Retrieved from the Internet <https://www.wired.com/2001/03/a-faster-way-to-call-911> (Mar. 10, 2001), 9 pages.
Libov, Charlotte. "EpiPen 101," Everyday Health [online], [retrieved Jul. 26, 2017] Retrieved from the internet <http://www.everydayhealth.com/allergy/epipen-101.aspx> (Feb. 23, 2012), 2 pages.
Office Action for U.S. Appl. No. 14/142,287, dated Apr. 6, 2017.
Office Action for Australia Patent Application No. 2015249064, dated Aug. 25, 2017.
Final Office Action for U.S. Appl. No. 14/993,234, dated Nov. 2, 2017.
Office Action for U.S. Appl. No. 15/139,826, dated Dec. 4, 2017.
Extended European Search Report for European Patent Application No. 07754184.5, dated Feb. 2, 2018.
Office Action for U.S. Appl. No. 15/061,462, dated Feb. 28, 2018.

* cited by examiner

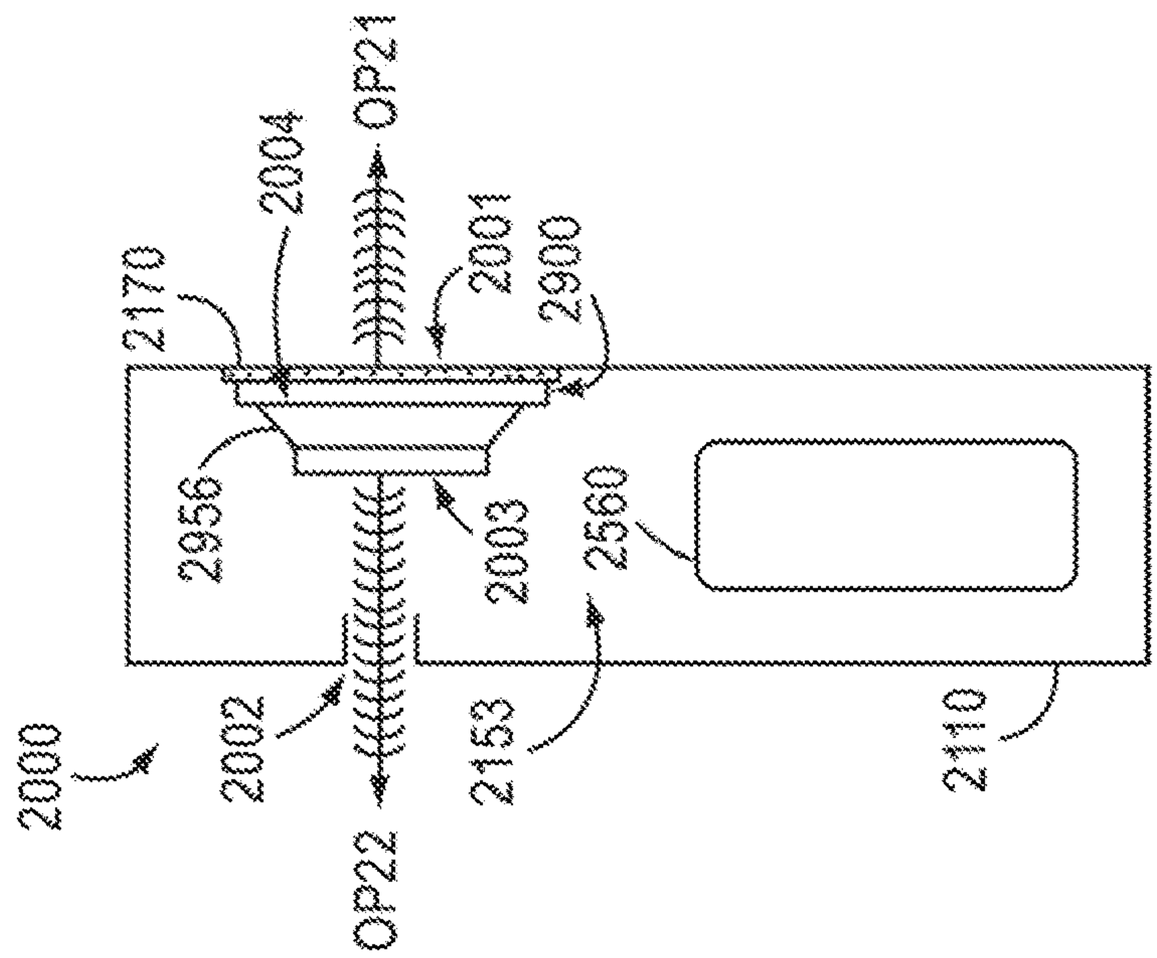
2000
2002
OP22
2153
2110
2956
2003
2560
2170
2004
OP21
2001
2900

FIG. 2

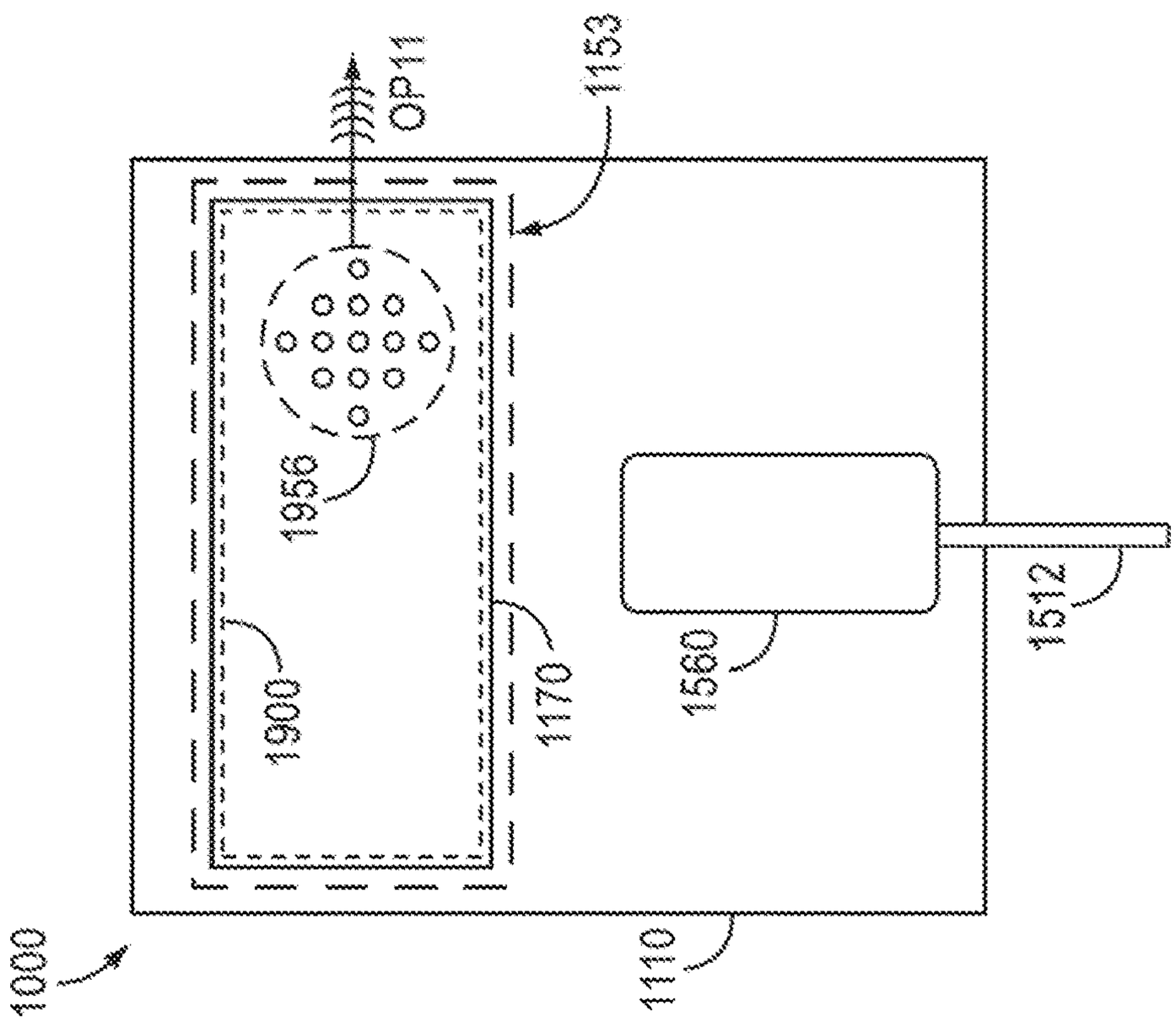
1000
1900
1956
OP11
1153
1170
1110
1580
1512

FIG. 1

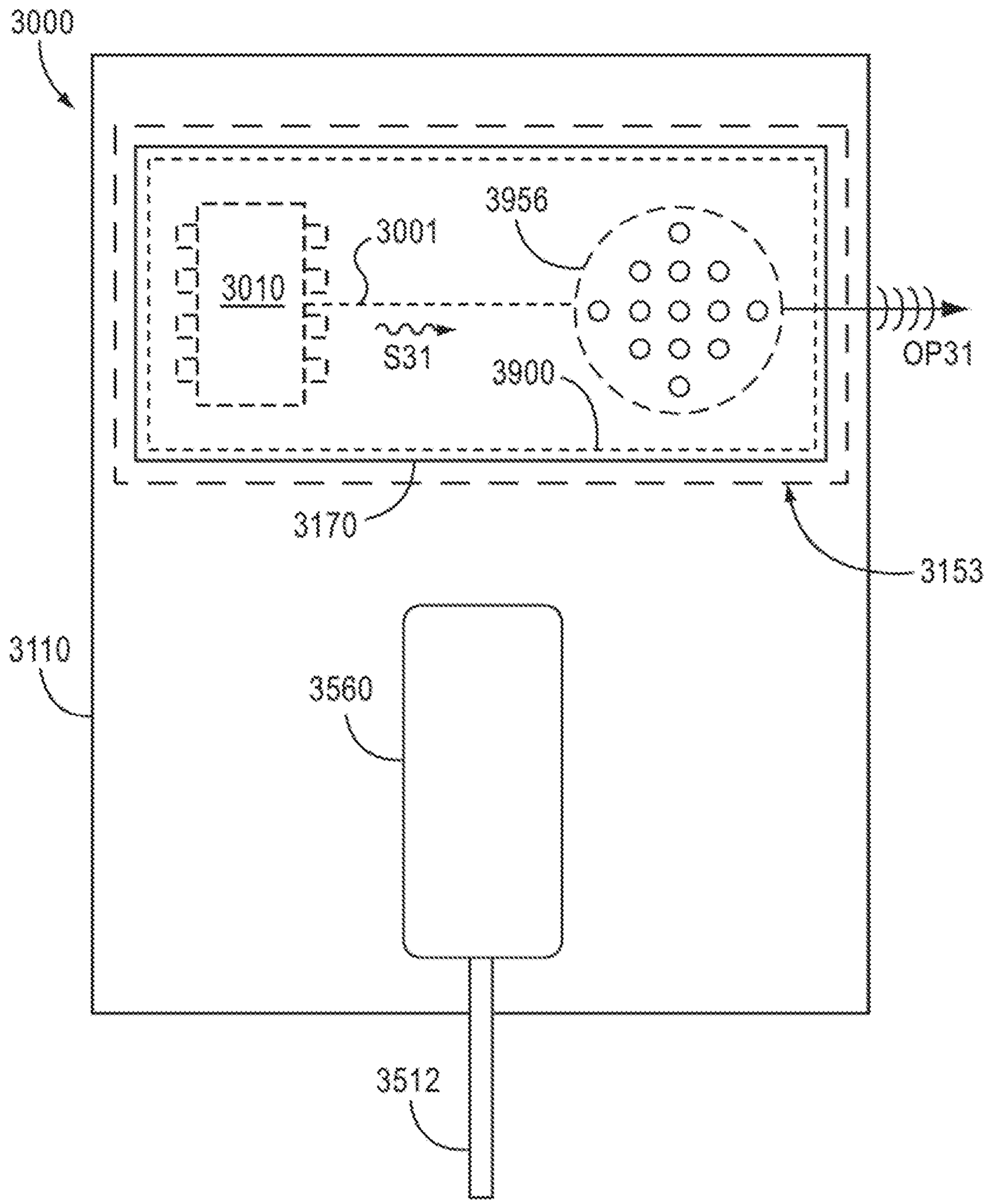

FIG.3

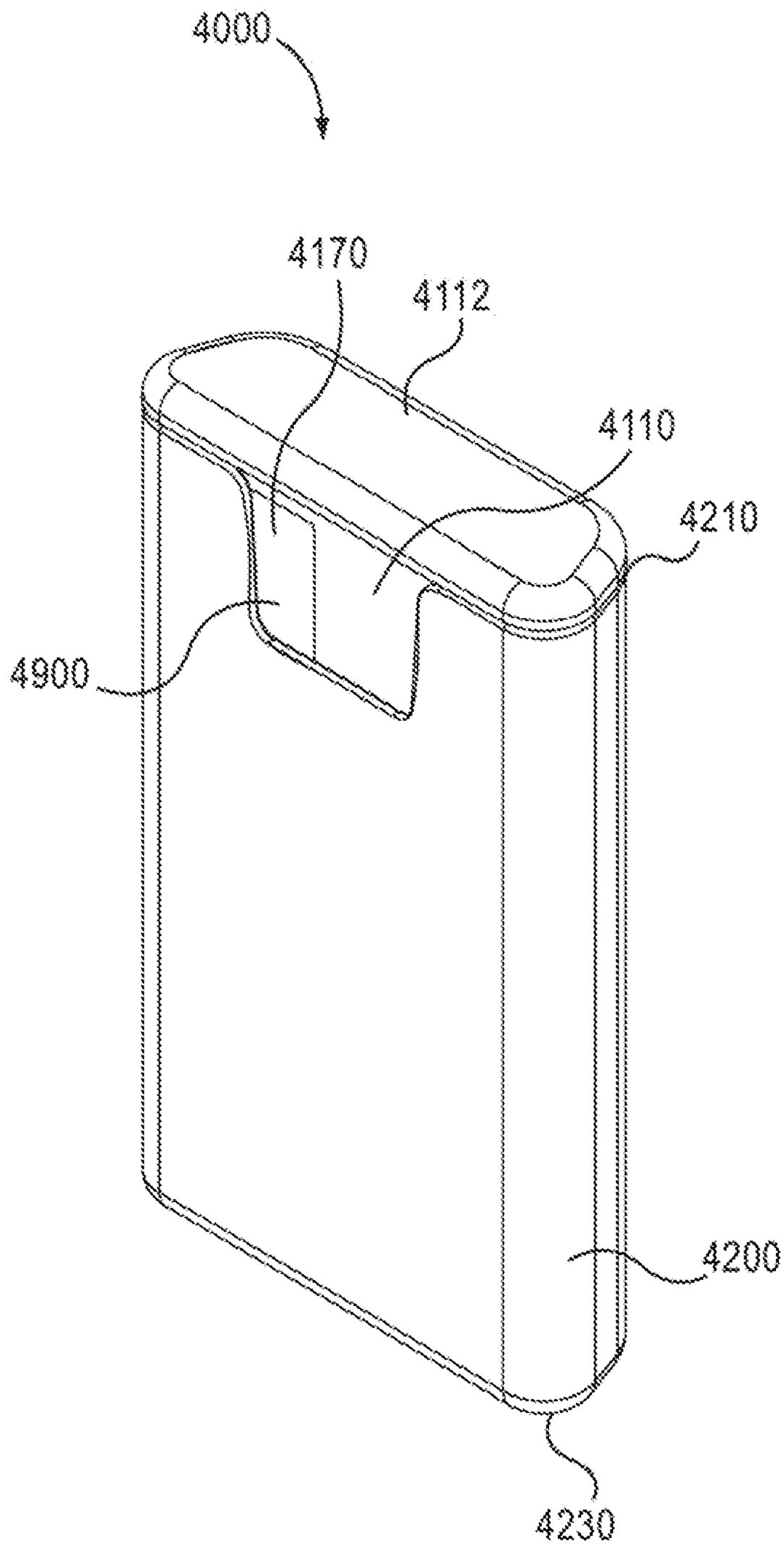

FIG.4A

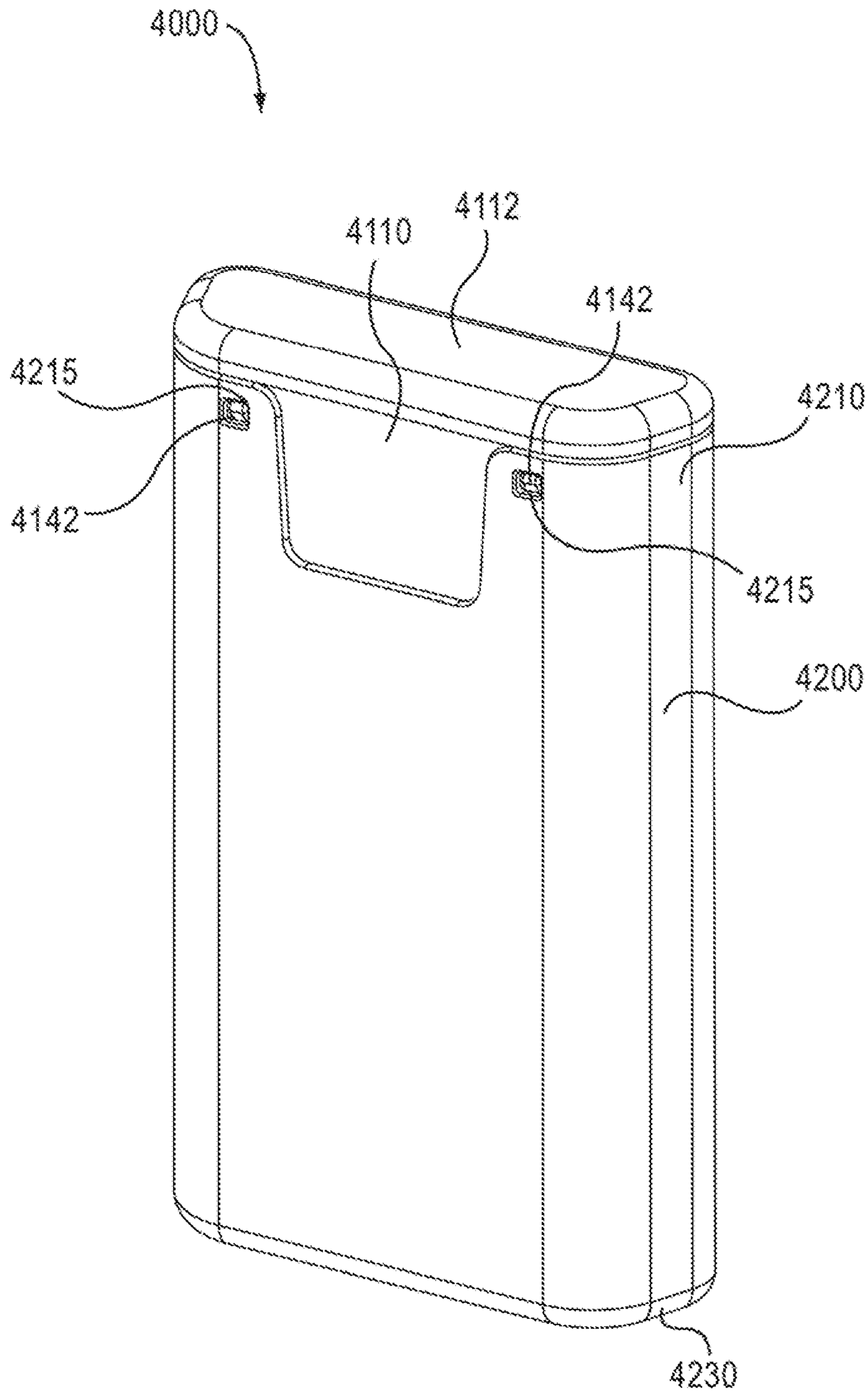

FIG.4B

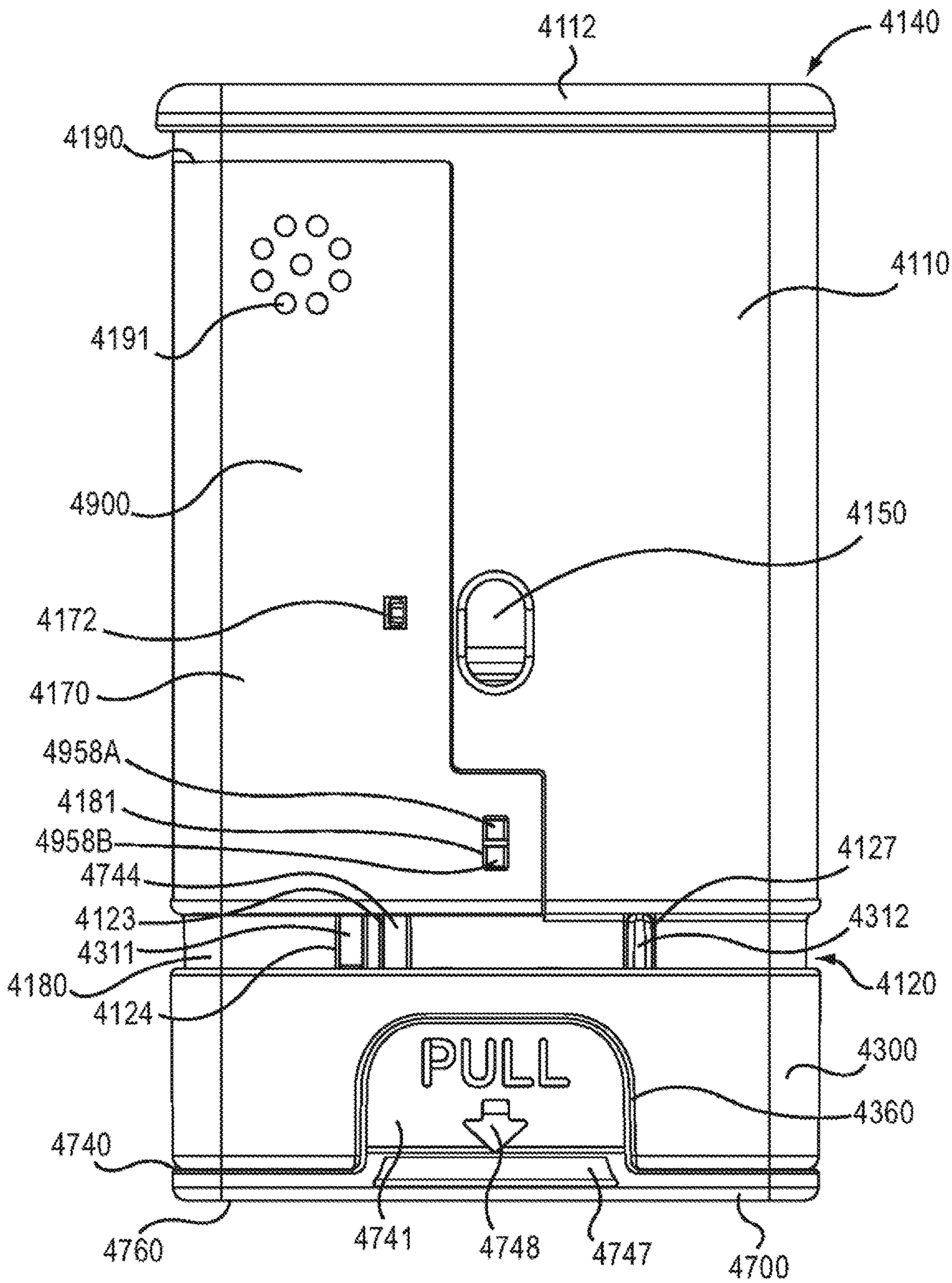
4112
4140
4190
4110
4191
4900
4150
4172
4170
4958A
4181
4958B
4744
4127
4123
4312
4311
4180
4120
4124
PULL
4300
4360
4740
4760
4741
4748
4747
4700

FIG. 5

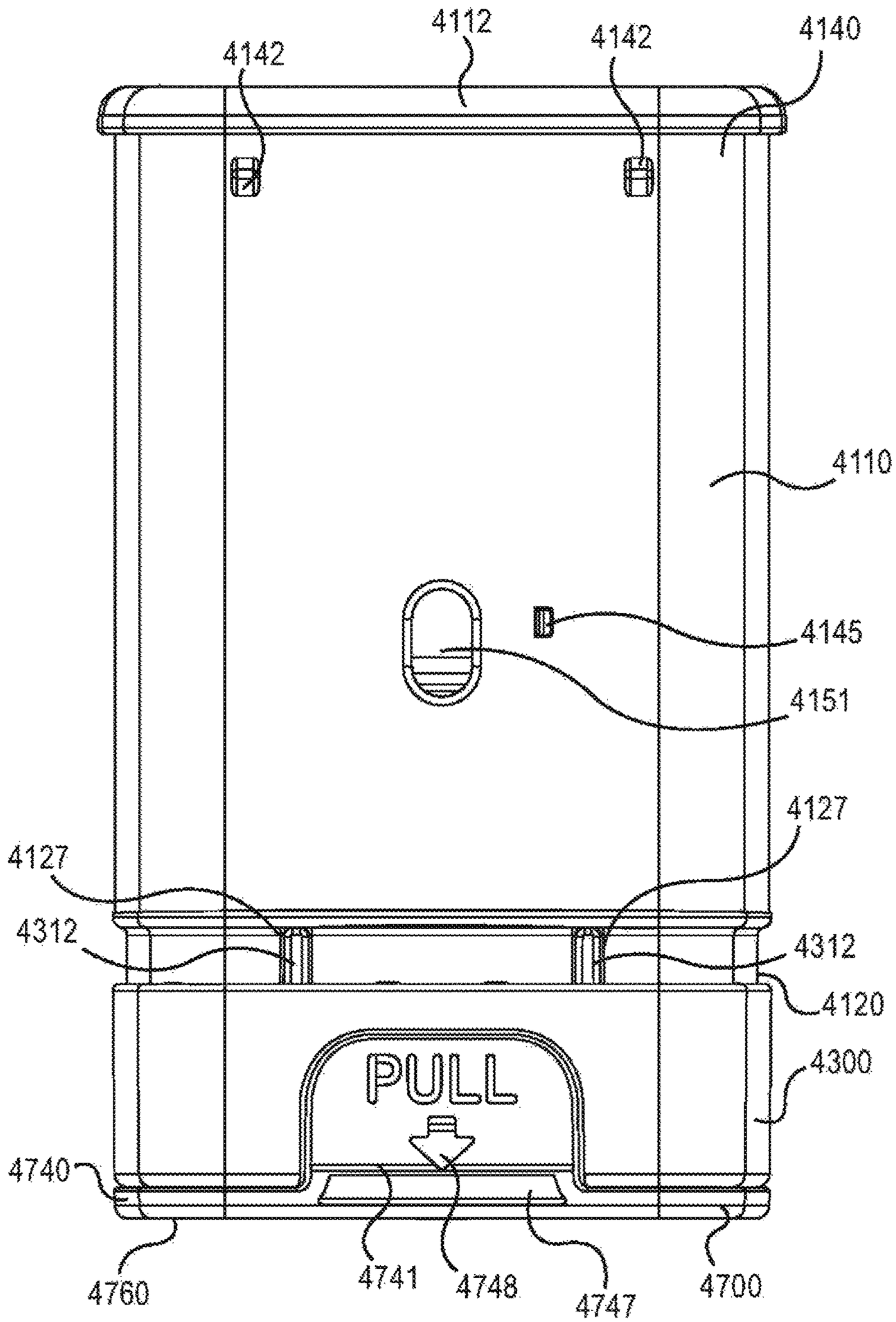
4112
4142
4142
4140
4110
4145
4151
4127
4127
4312
4312
4120
PULL
4300
4740
4760
4741
4748
4747
4700

FIG.6

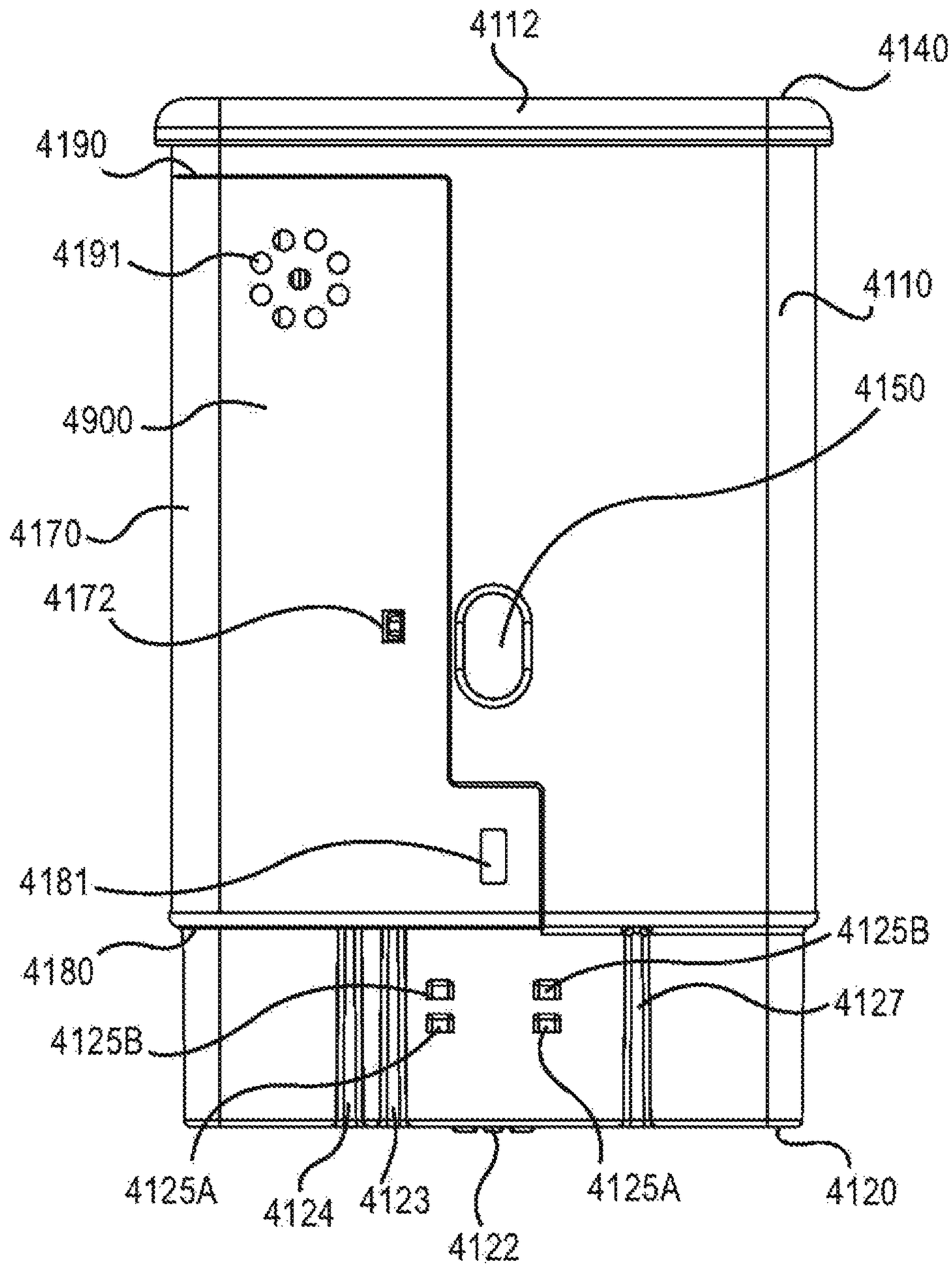
4112
4140
4190
4191
4110
4900
4150
4170
4172
4181
4125B
4180
4127
4125B
4125A
4124
4123
4122
4125A
4120

FIG.7

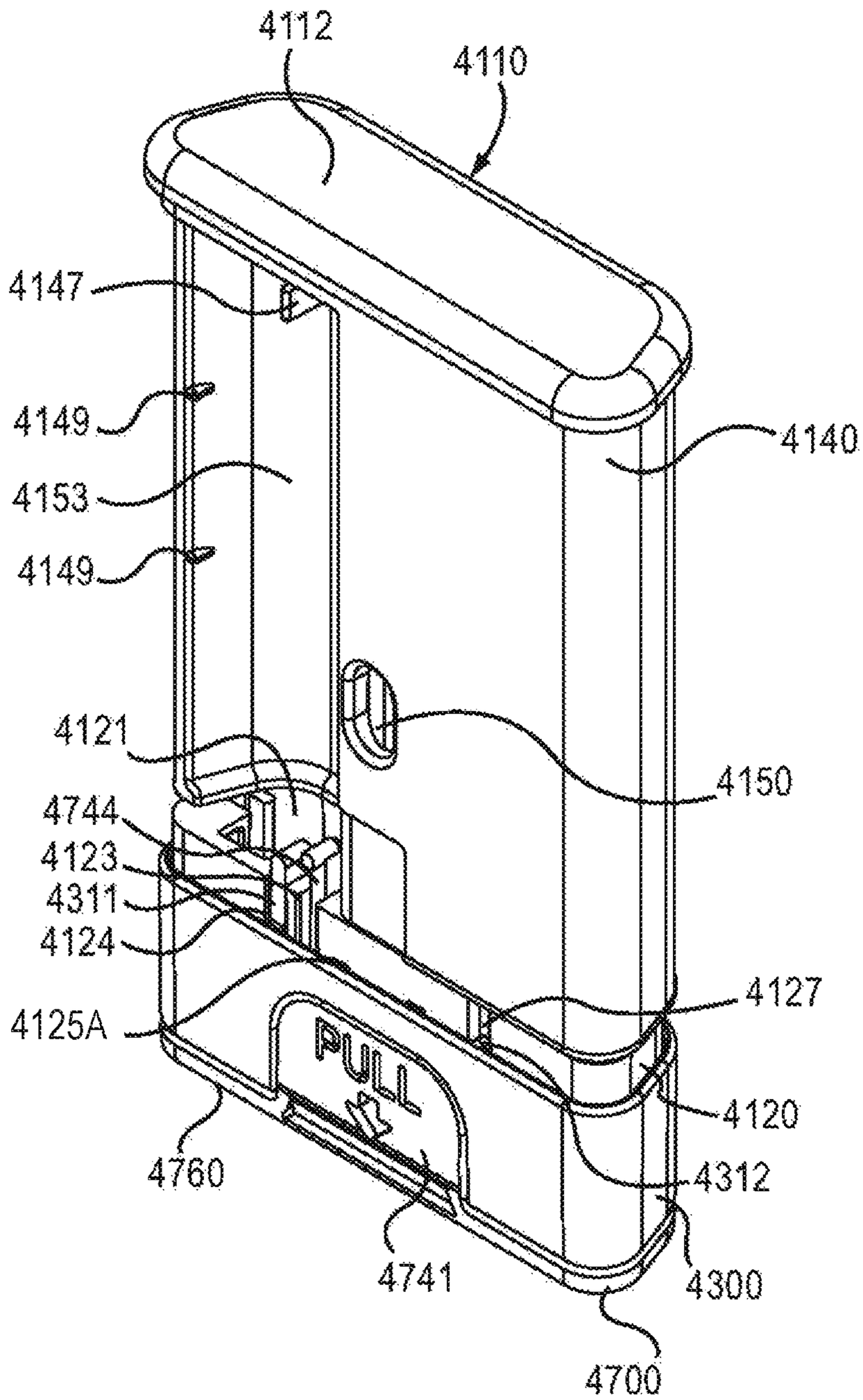
4112
4110
4147
4149
4153
4149
4140
4121
4150
4744
4123
4311
4124
4127
4125A
PULL
4120
4760
4312
4741
4300
4700

FIG.8

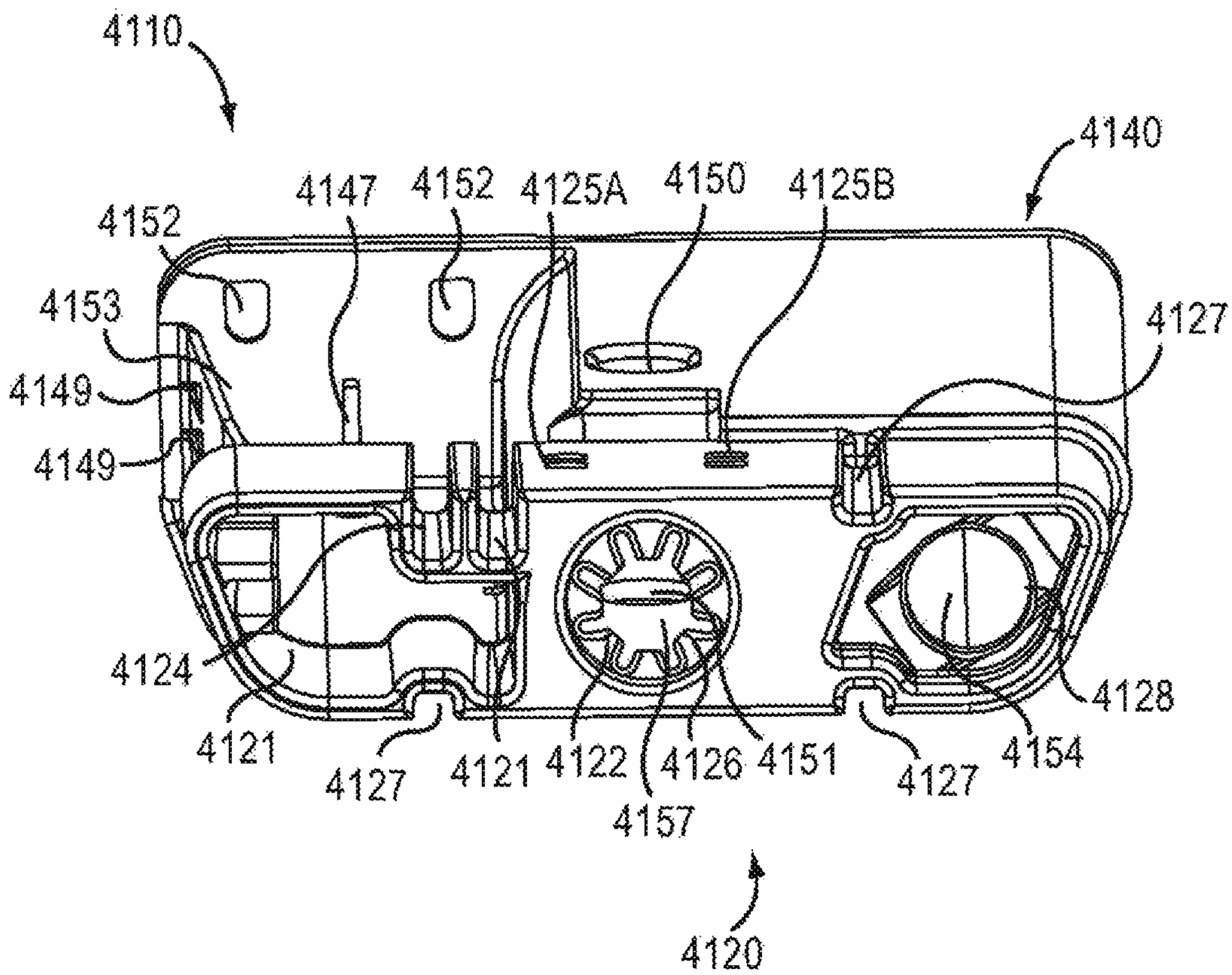
4110
4140
4147
4152
4125A
4150
4125B
4152
4153
4127
4149
4149
4124
4128
4121
4127
4121
4122
4126
4151
4127
4154
4157
4120

FIG.9

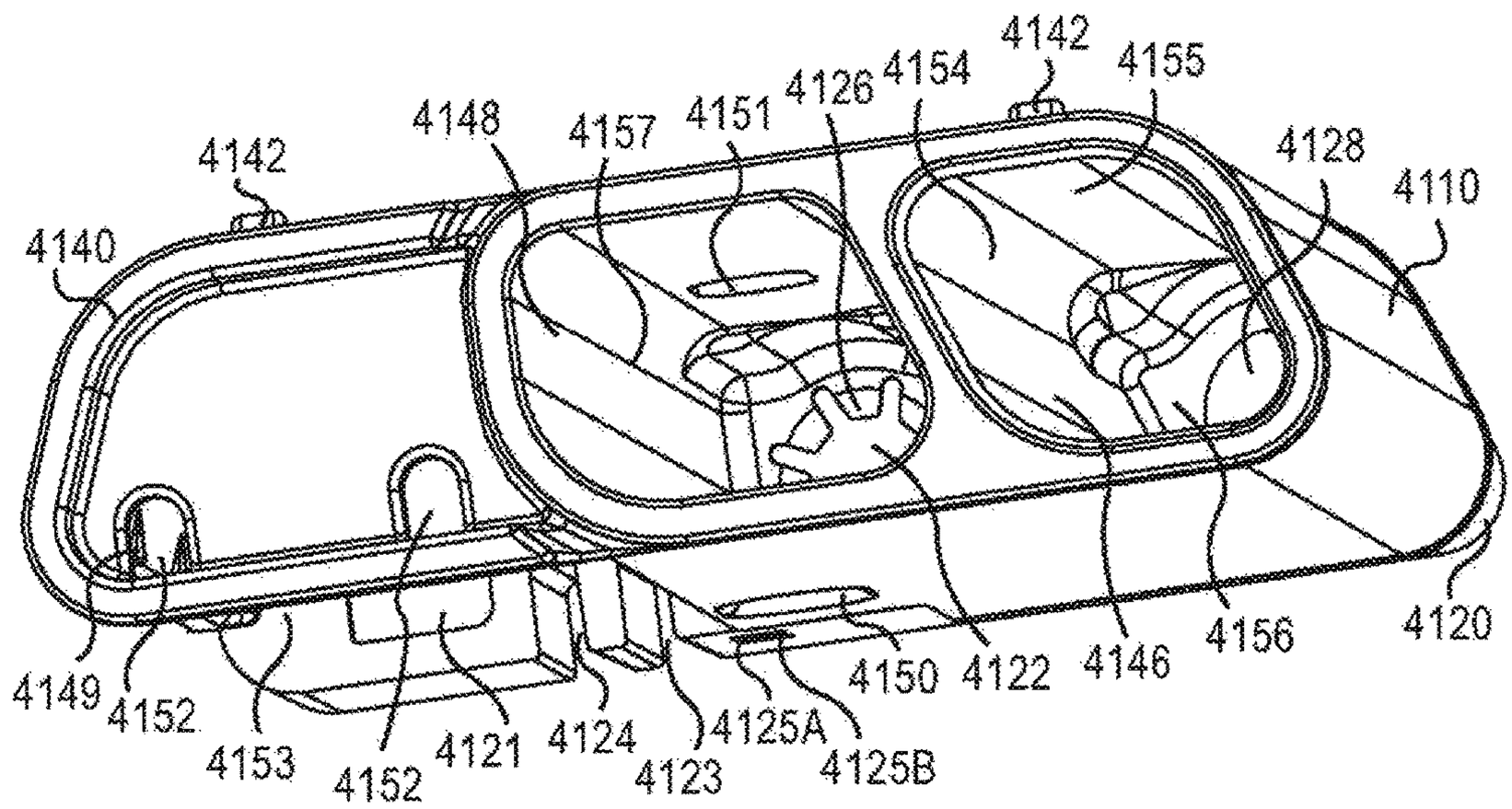
4142
4155
4154
4126
4151
4157
4148
4142
4128
4110
4140
4149
4152
4153
4152
4121
4124
4123
4125A
4125B
4150
4122
4146
4156
4120

FIG.10

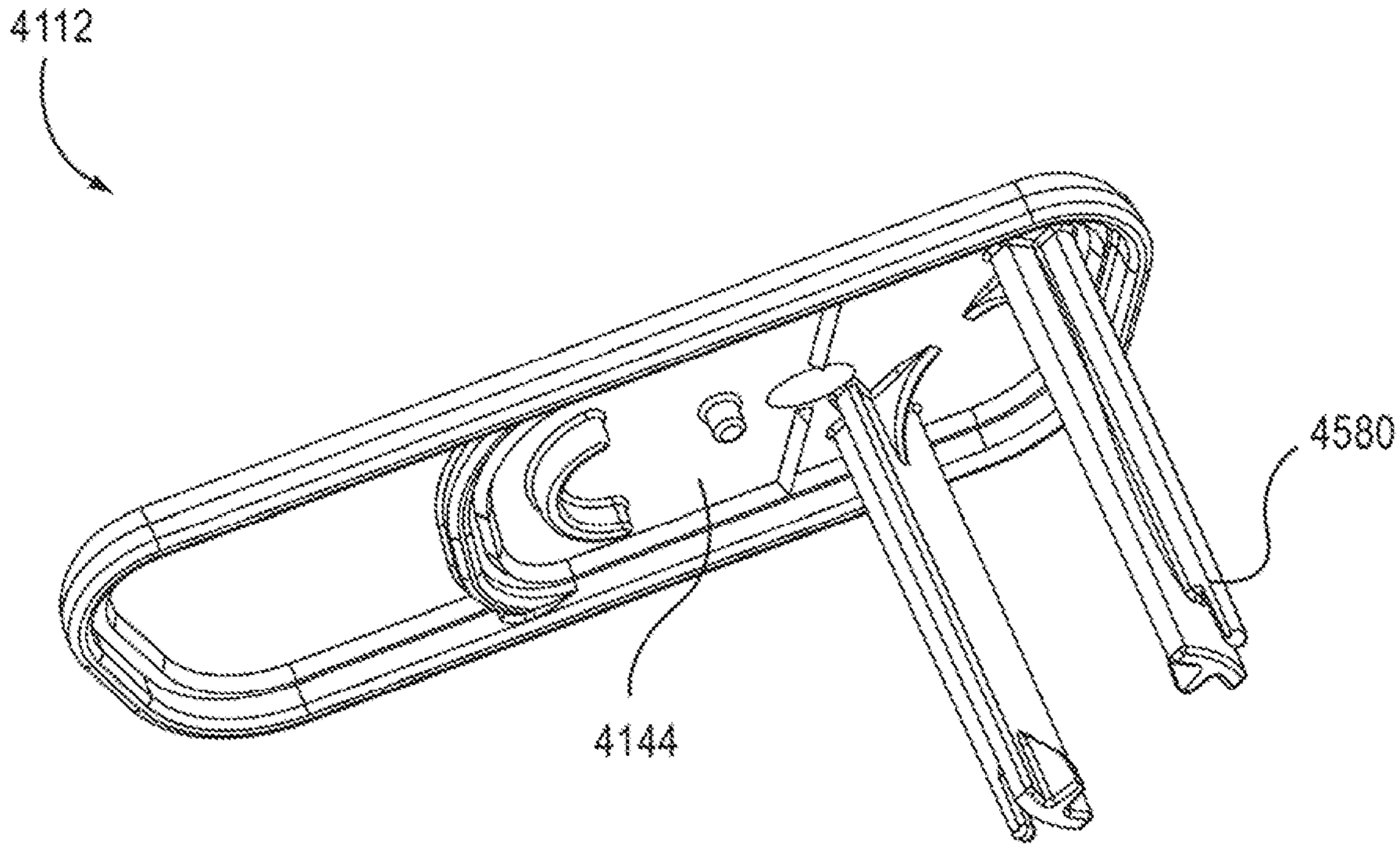

FIG. 11

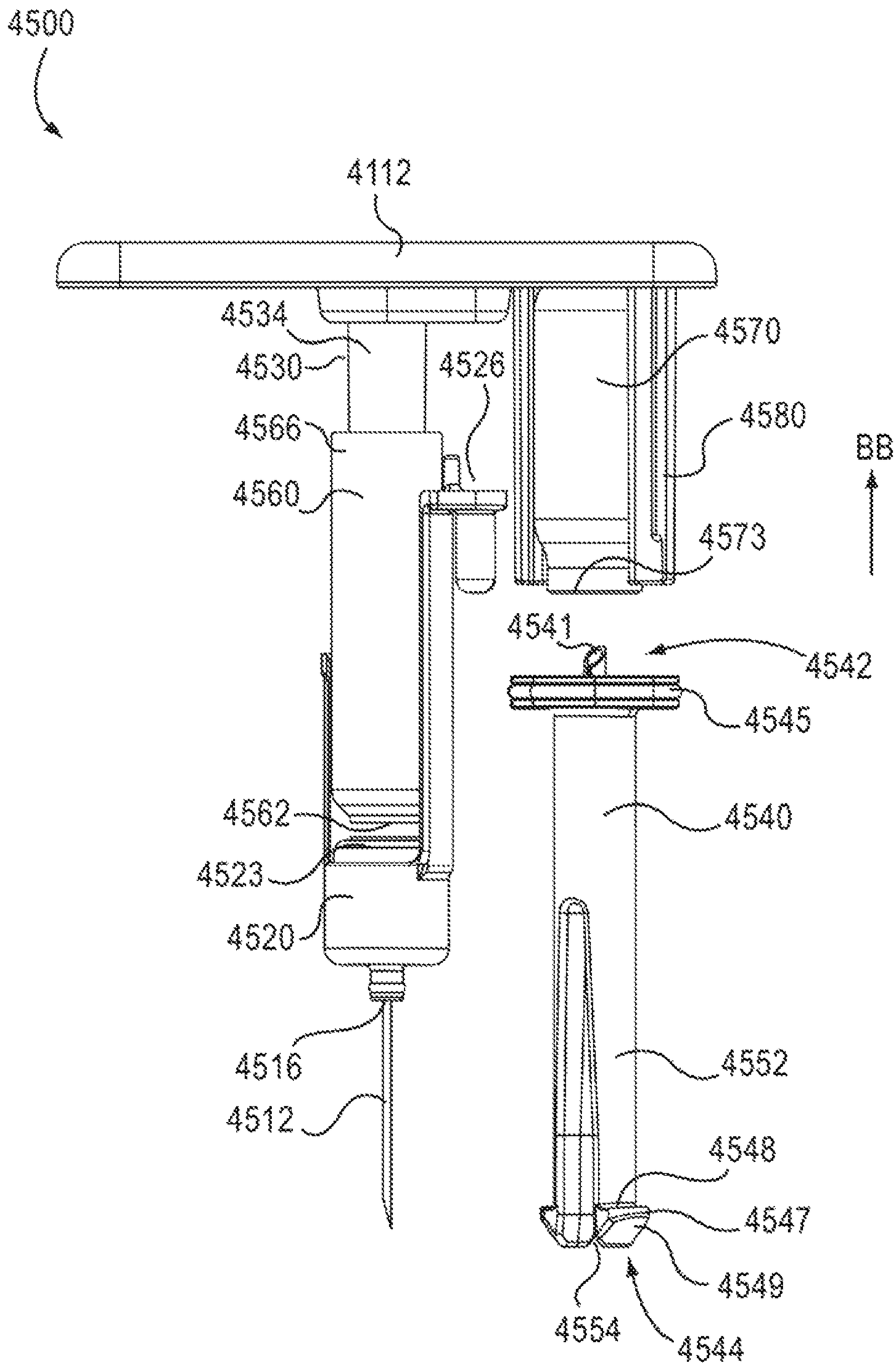
4500
4112
4534
4530
4526
4570
4566
4580
BB
4560
4573
4541
4542
4545
4562
4540
4523
4520
4516
4552
4512
4548
4547
4549
4554
4544

FIG.12

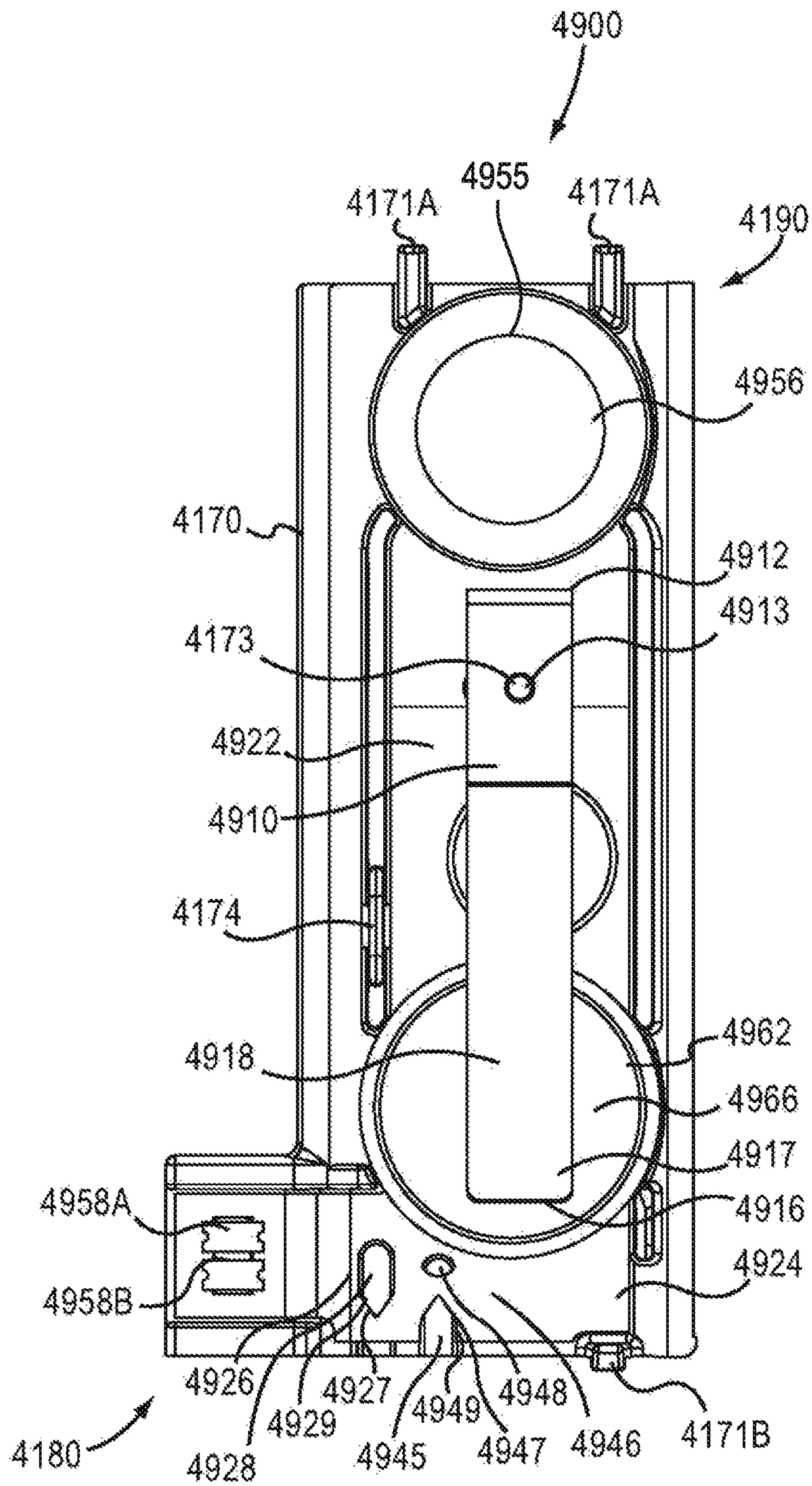
4900
4955
4171A
4171A
4190
4956
4170
4912
4913
4173
4922
4910
4174
4962
4918
4966
4917
4958A
4916
4924
4958B
4926
4927
4949
4948
4929
4945
4947
4946
4171B
4180
4928

FIG.13

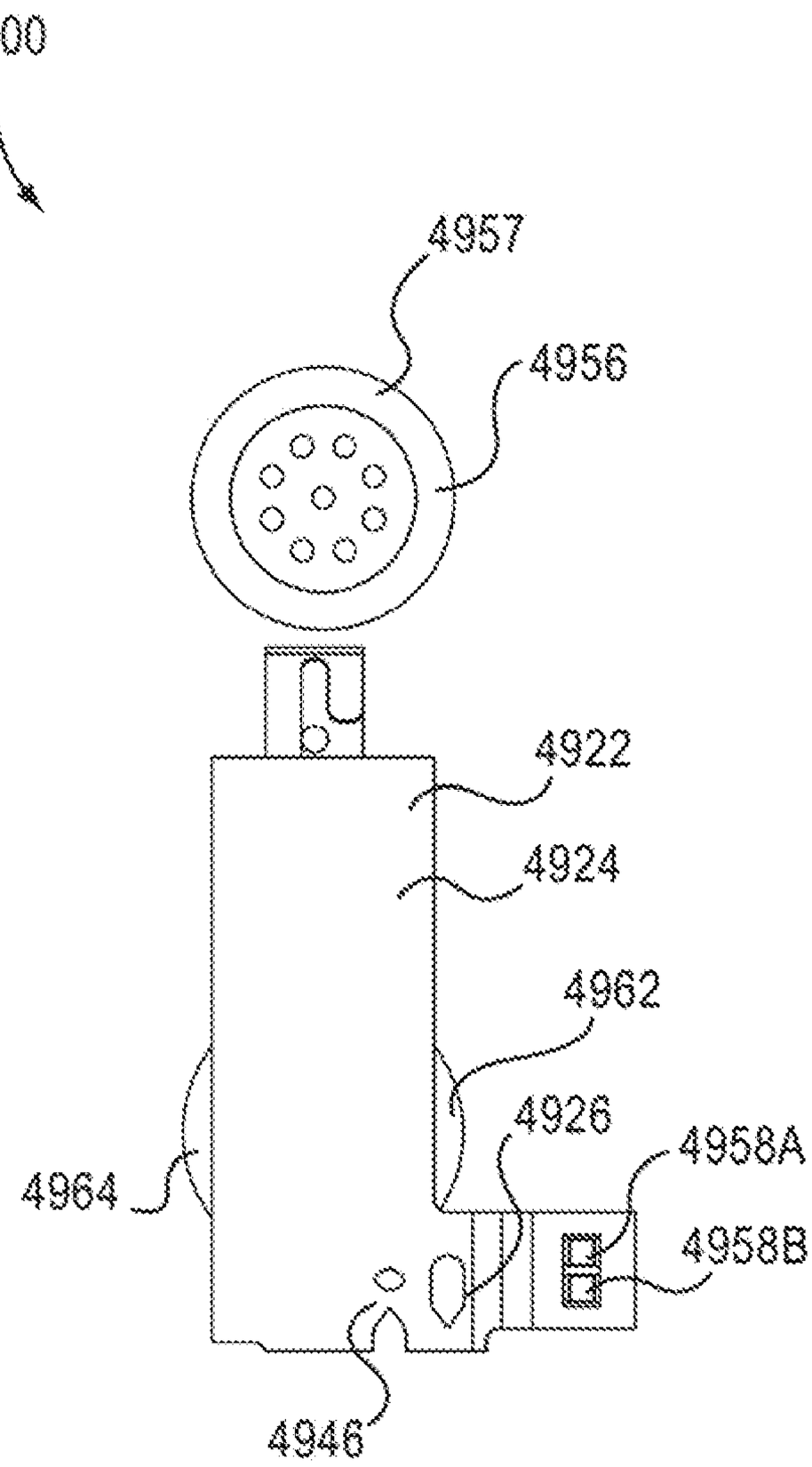

FIG.14

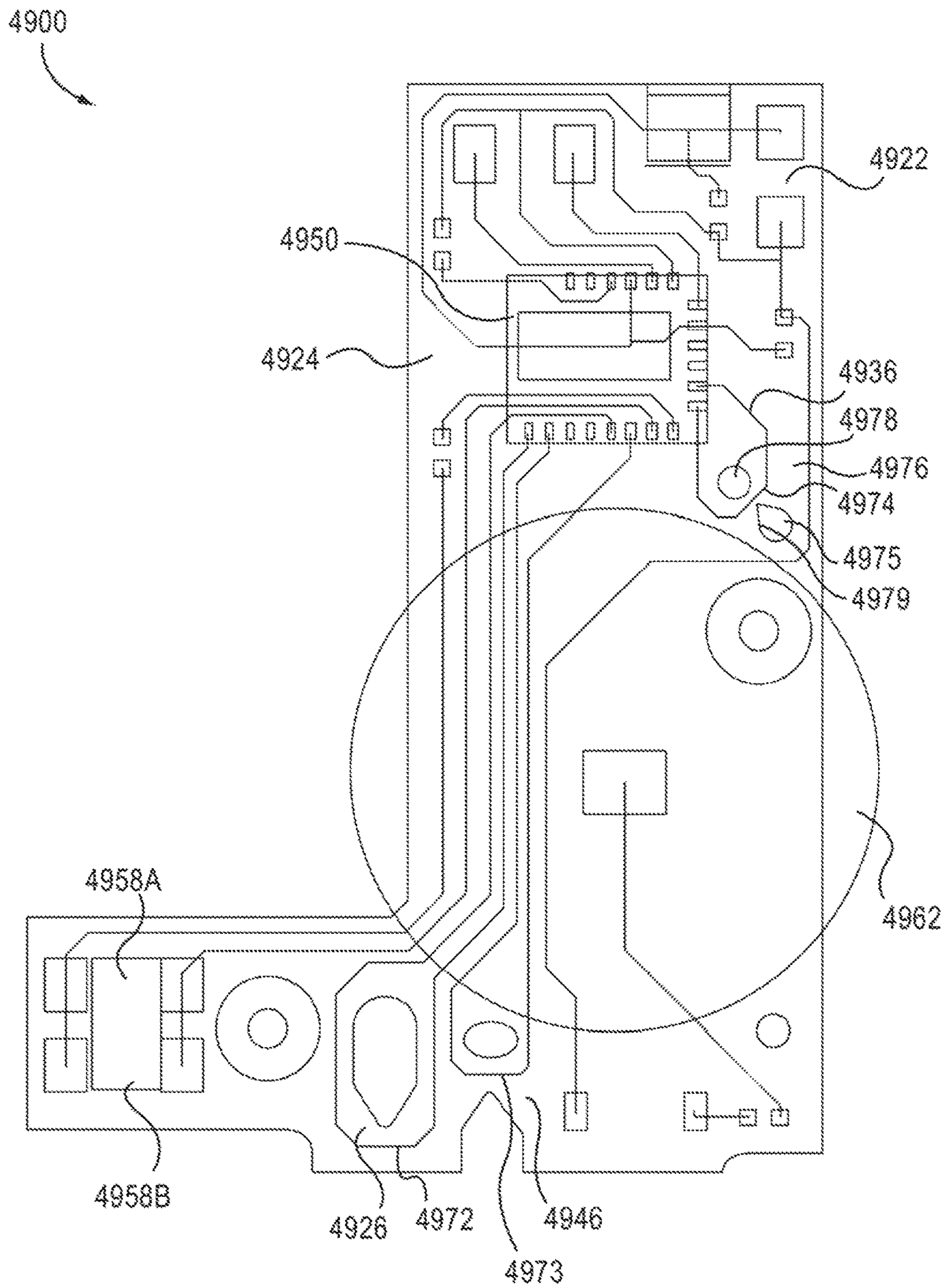
4900
4922
4950
4924
4936
4978
4976
4974
4975
4979
4962
4958A
4958B
4926
4972
4946
4973

FIG.15

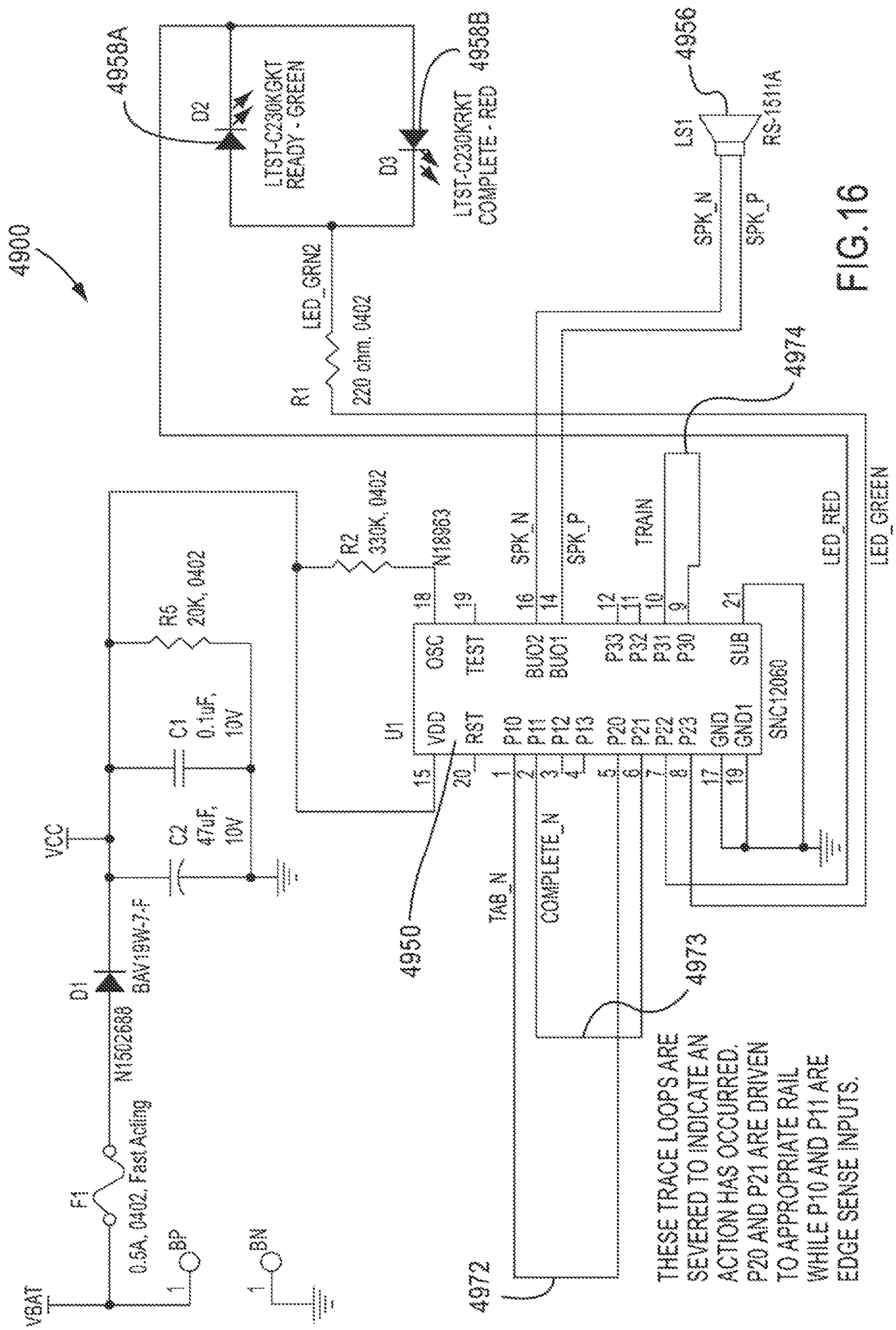
4900
4958A
D2
LTST-C230KGKT
READY - GREEN
D3
LTST-C230KRKT
COMPLETE - RED
4958B
LED_GRN2
R1
220 ohm, 0402
4956
LS1
RS-1511A
SPK_N
SPK_P
4974
LED_RED
LED_GREEN
R2
330K, 0402
N18963
SPK_N
SPK_P
TRAIN
R5
20K, 0402
C1
0.1uF,
10V
C2
47uF,
10V
VCC
U1
OSC
TEST
BUD2
BUD1
P33
P32
P31
P30
SUB
VDD
RST
P10
P11
P12
P13
P20
P21
P22
P23
GND
GND1
SNC12060
TAB_N
COMPLETE_N
4950
D1
BAV19W-7-F
N1502688
F1
0.5A, 0402, Fast Acting
VBAT
BP
BN
4973
4972
THESE TRACE LOOPS ARE
SEVERED TO INDICATE AN
ACTION HAS OCCURRED.
P20 AND P21 ARE DRIVEN
TO APPROPRIATE RAIL
WHILE P10 AND P11 ARE
EDGE SENSE INPUTS.

FIG. 16

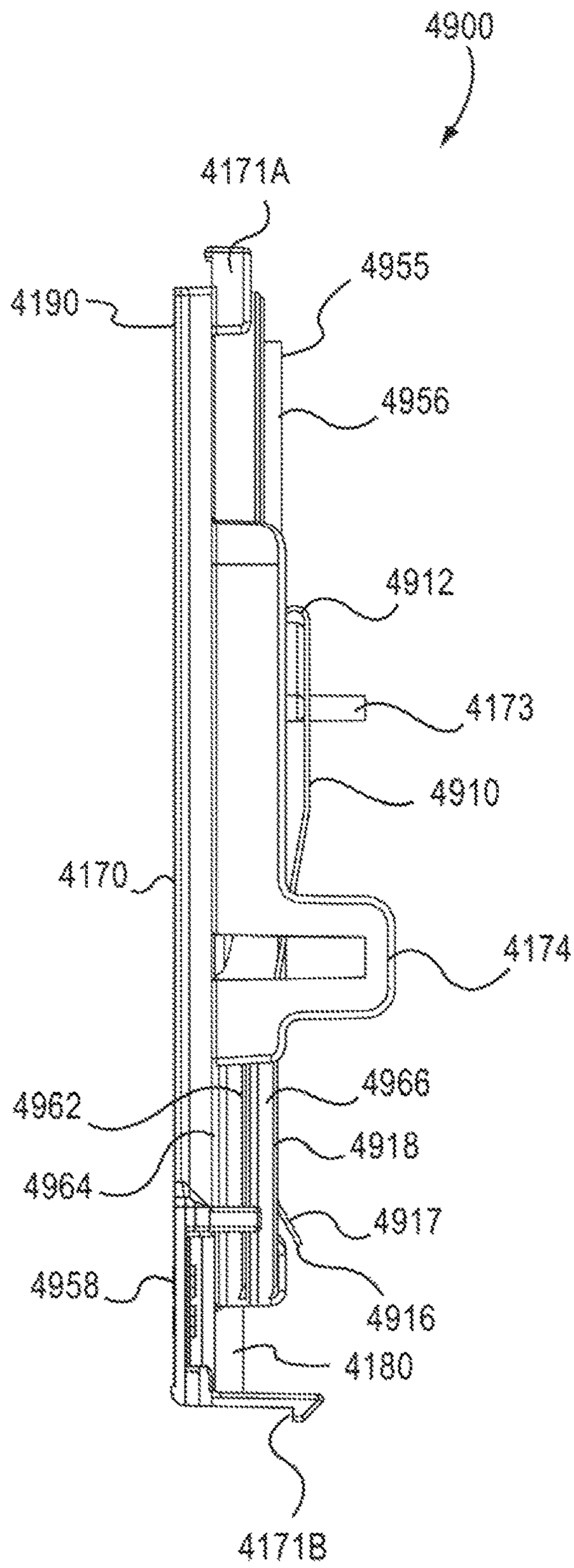
4900
4171A
4955
4190
4956
4912
4173
4910
4170
4174
4966
4962
4918
4964
4917
4958
4916
4180
4171B

FIG.17

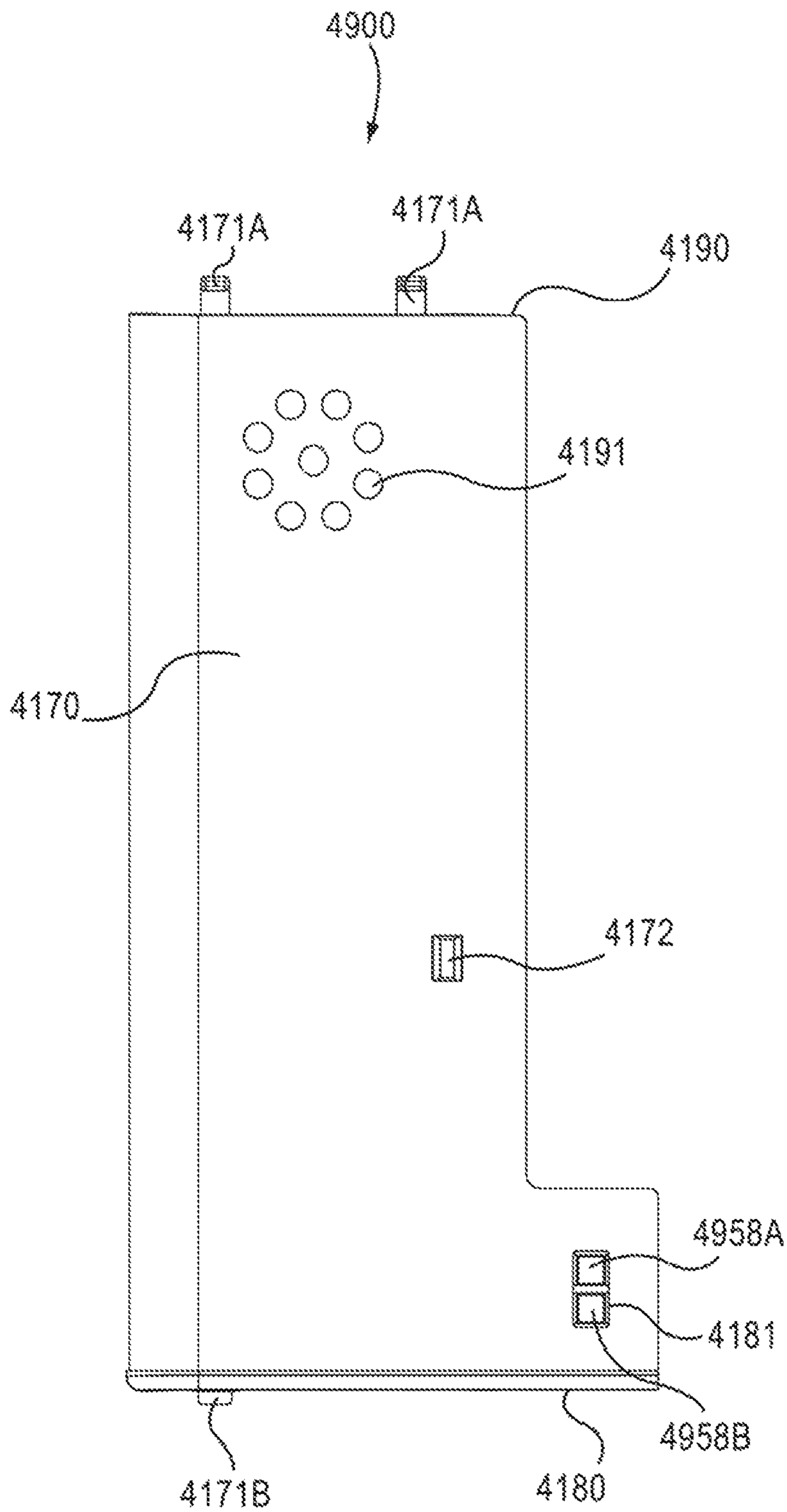
4900
4171A
4171A
4190
4191
4170
4172
4958A
4181
4958B
4171B
4180

FIG.18

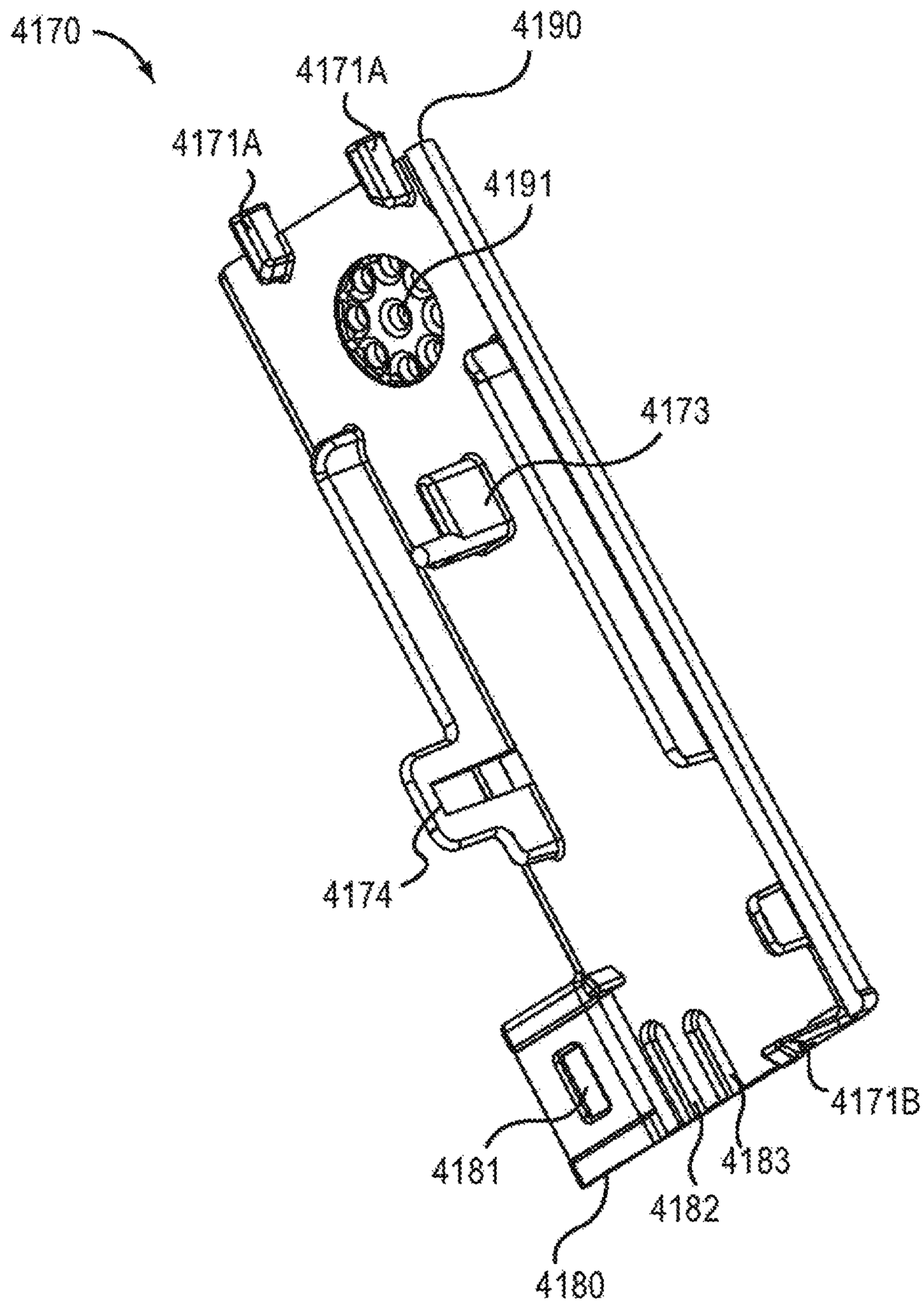
4170
4190
4171A
4171A
4191
4173
4174
4171B
4181
4183
4182
4180

FIG. 19

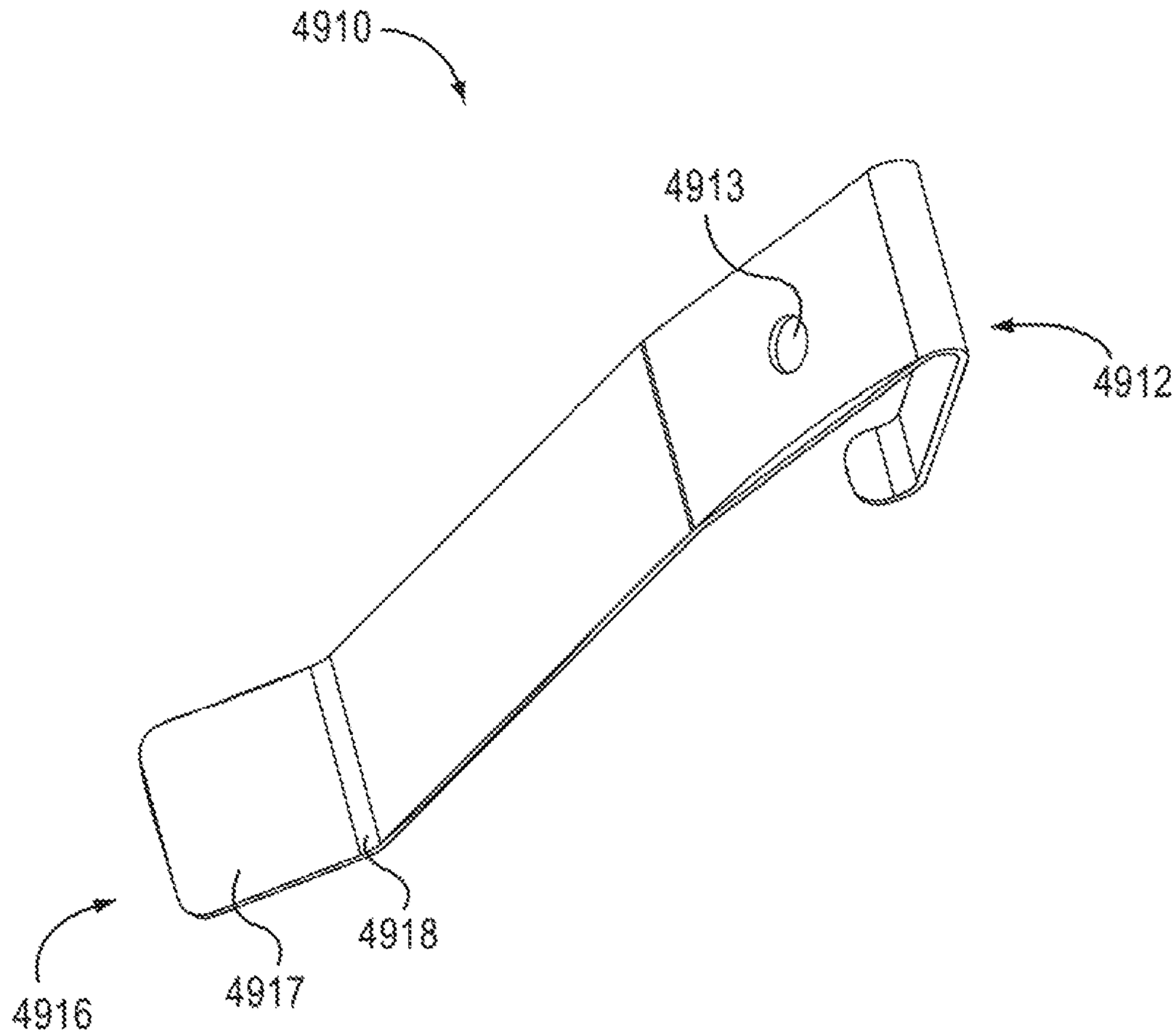

FIG.20

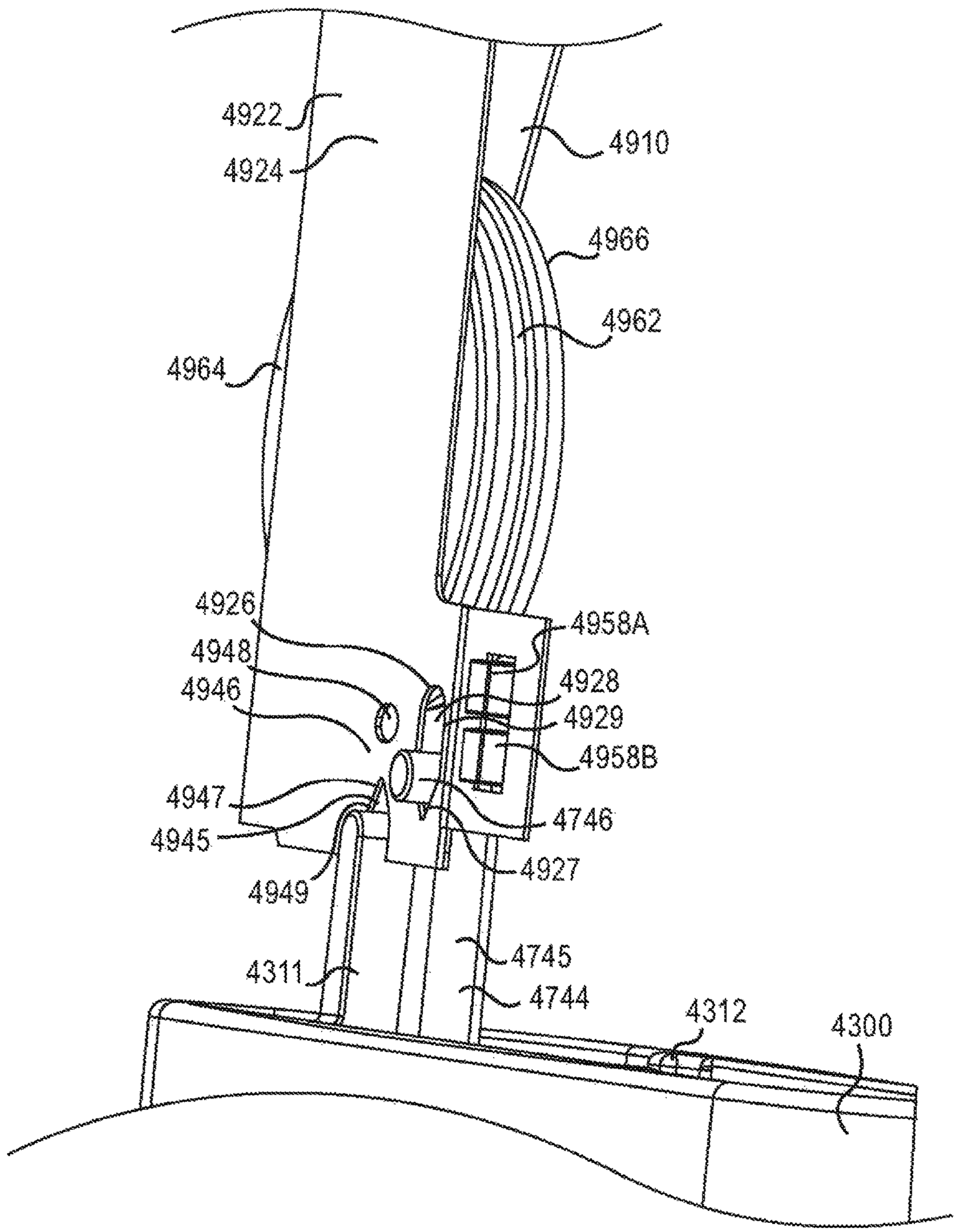
4922
4924
4910
4966
4962
4964
4926
4948
4946
4958A
4928
4929
4958B
4947
4945
4746
4927
4949
4745
4311
4744
4312
4300

FIG. 20A

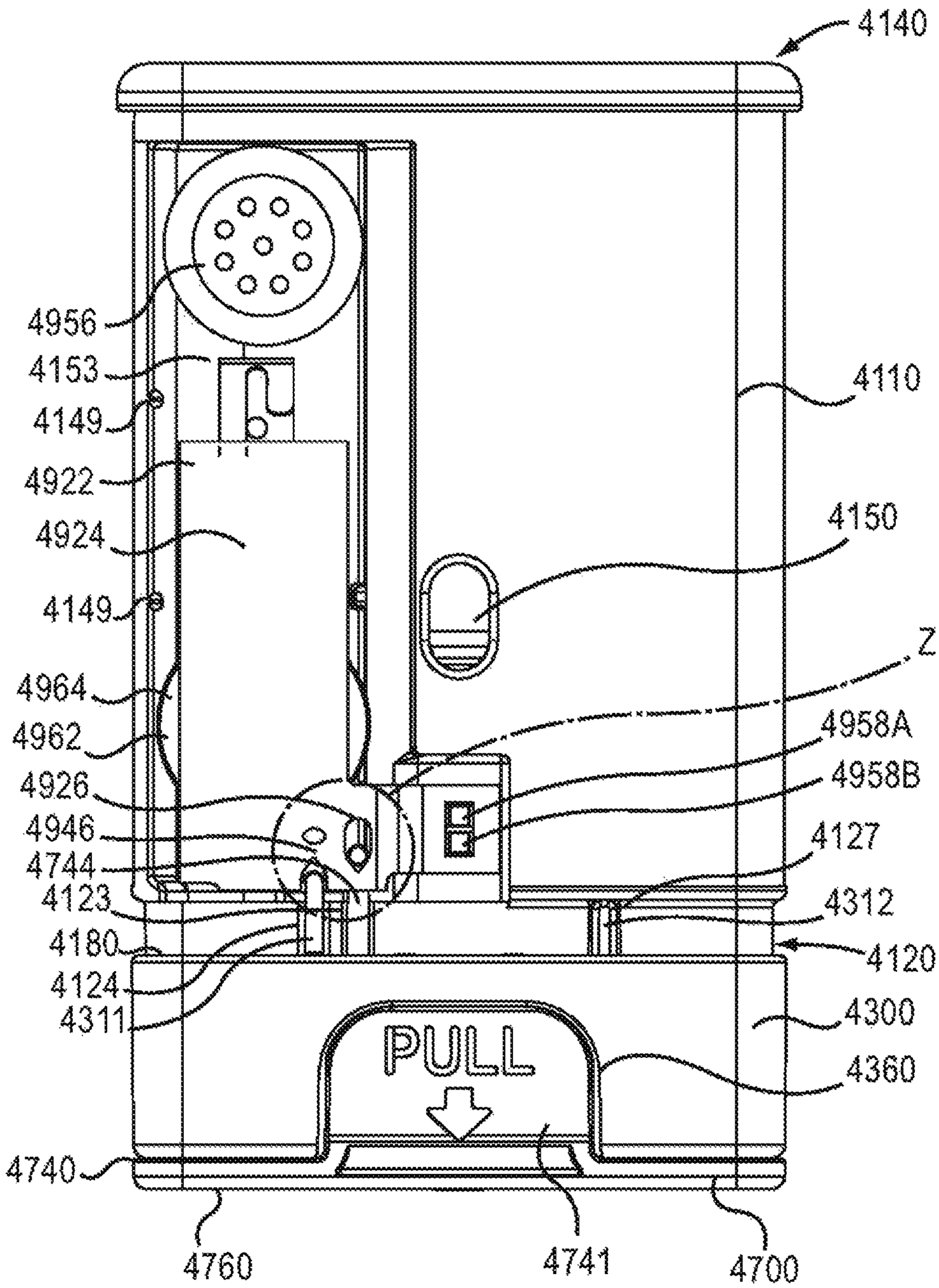
4140
4956
4153
4149
4922
4924
4149
4964
4962
4926
4946
4744
4123
4180
4124
4311
4110
4150
Z
4958A
4958B
4127
4312
4120
4300
4360
PULL
4740
4760
4741
4700

FIG. 21

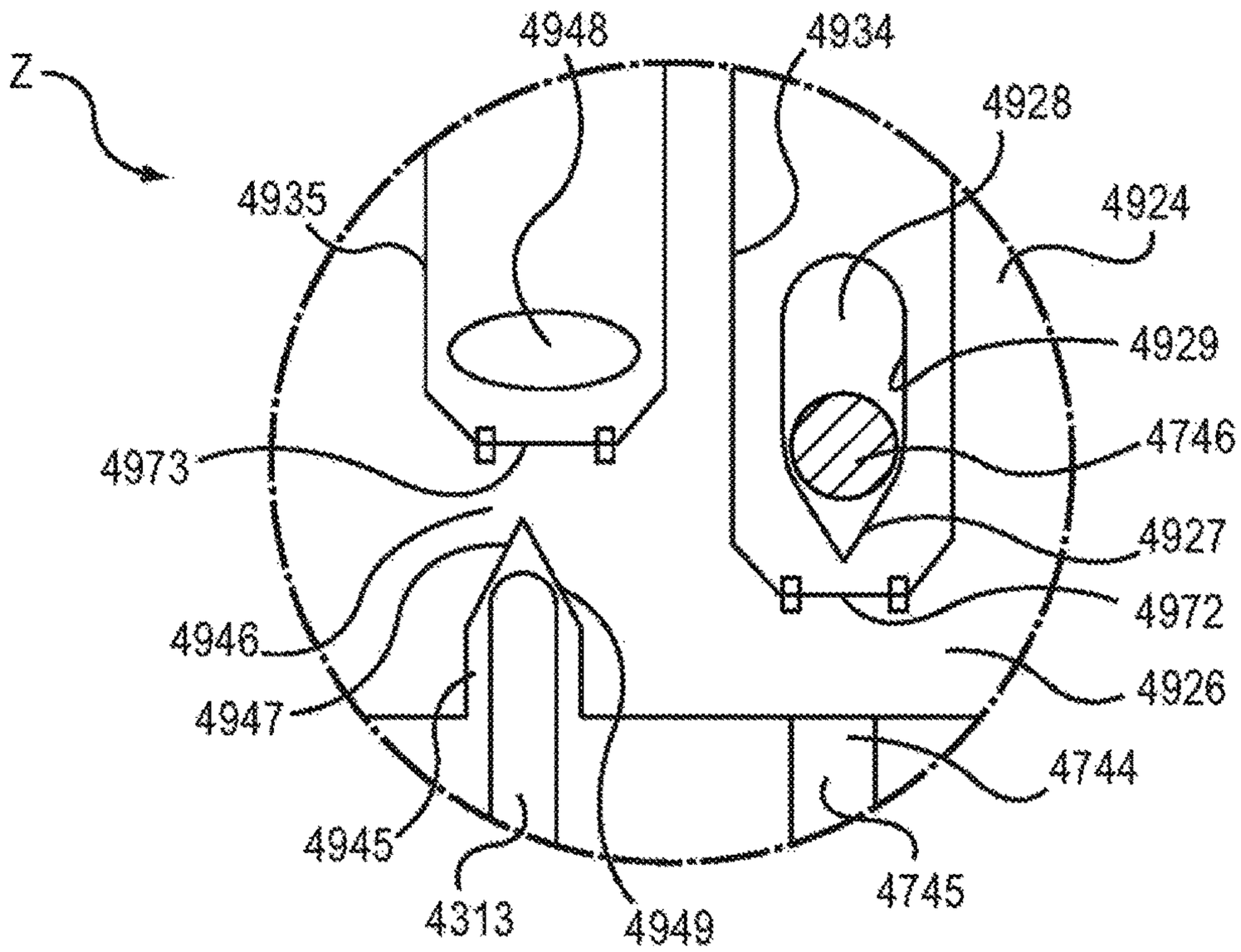

FIG. 21A

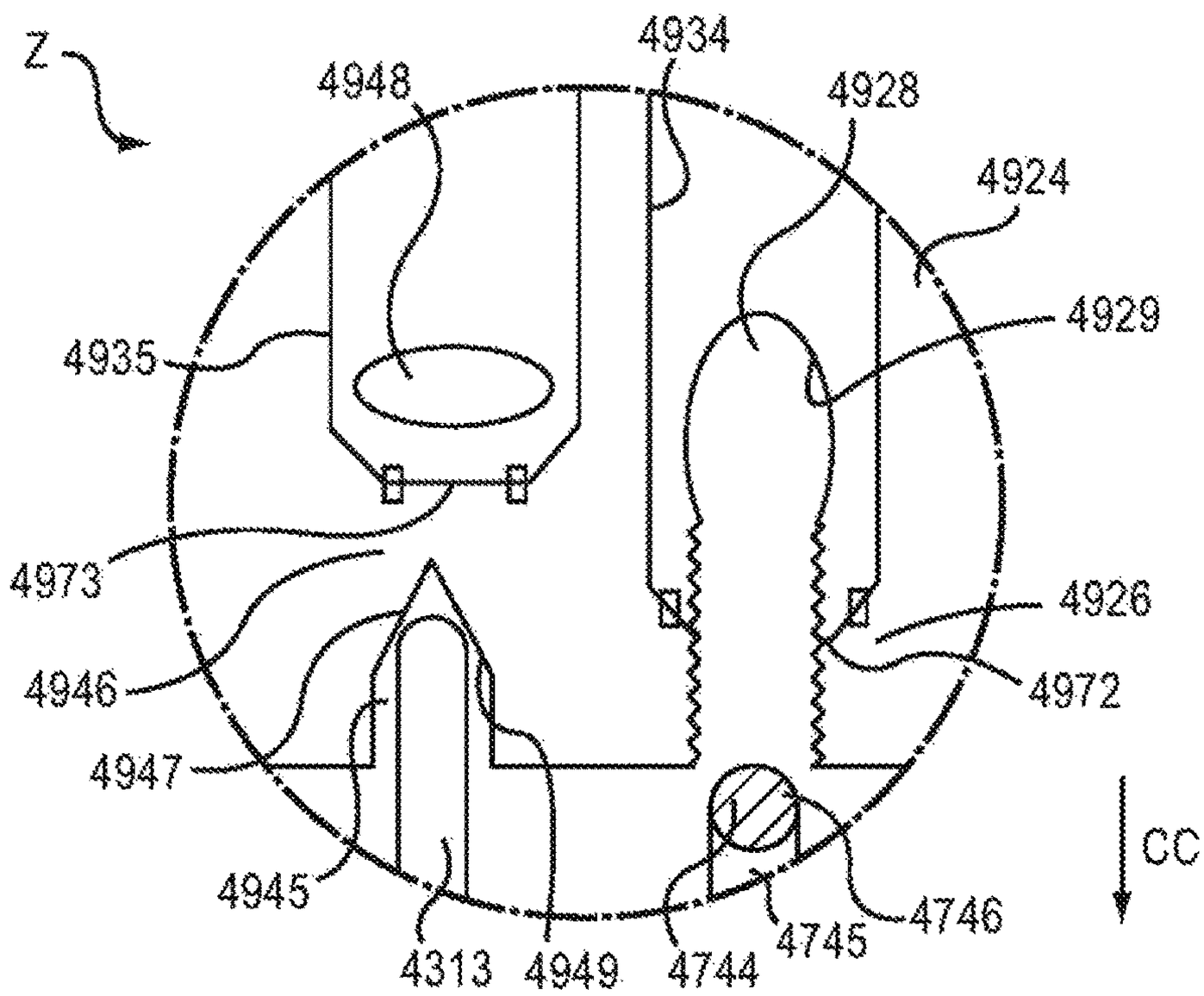

FIG. 21B

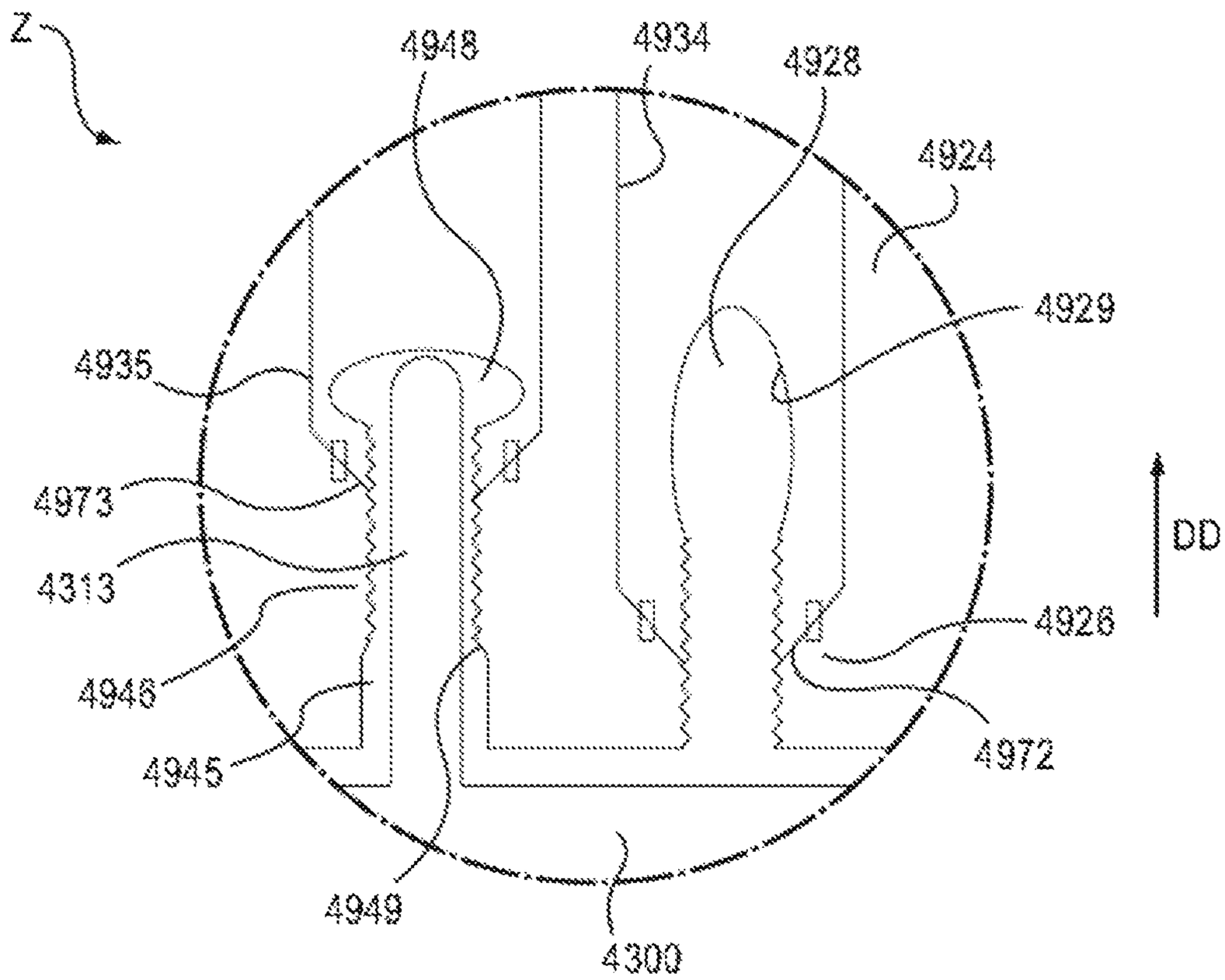
Z
4948
4934
4928
4924
4929
4935
4973
4313
4946
4945
4949
4300
4926
4972
DD

FIG. 21C

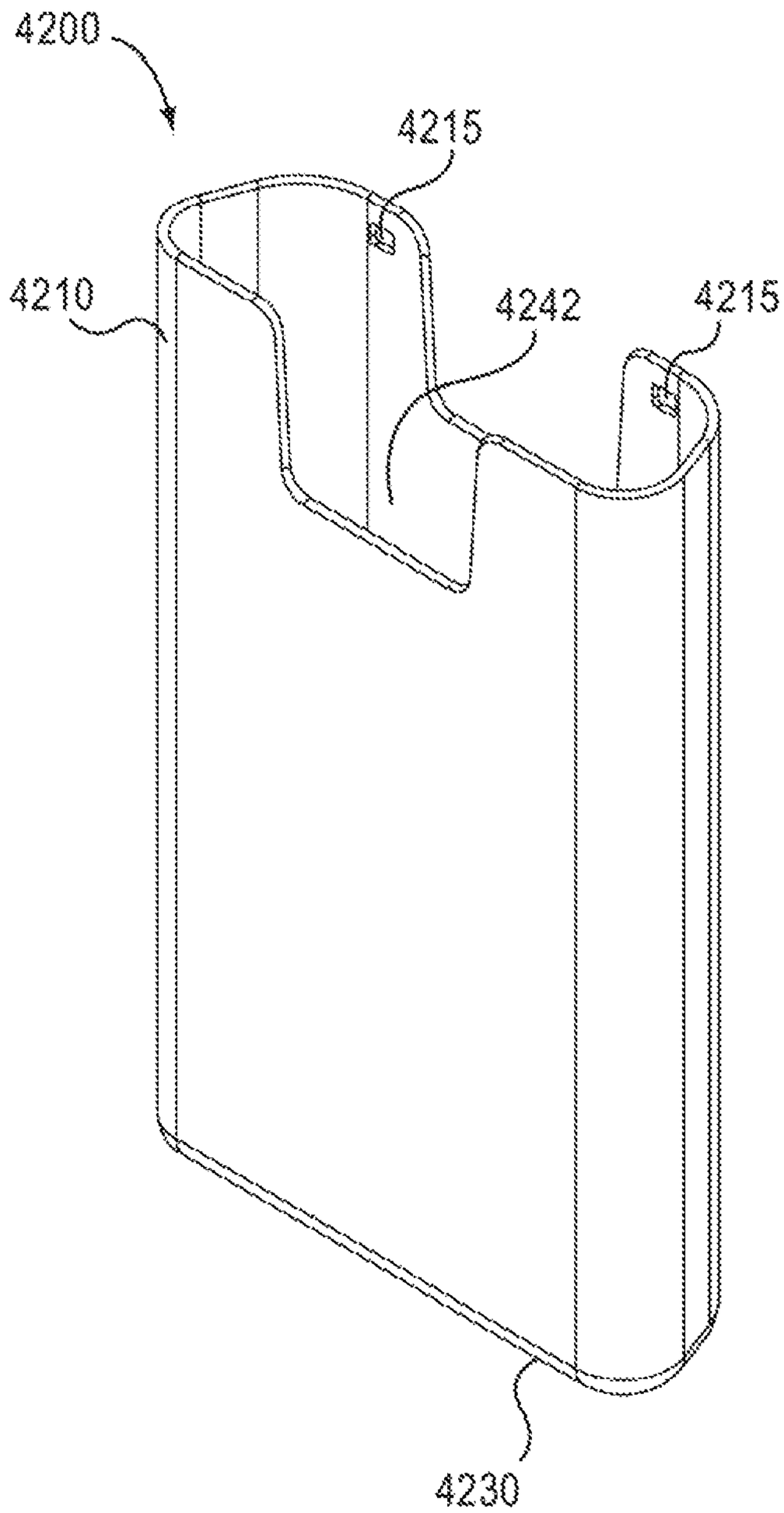

FIG.22

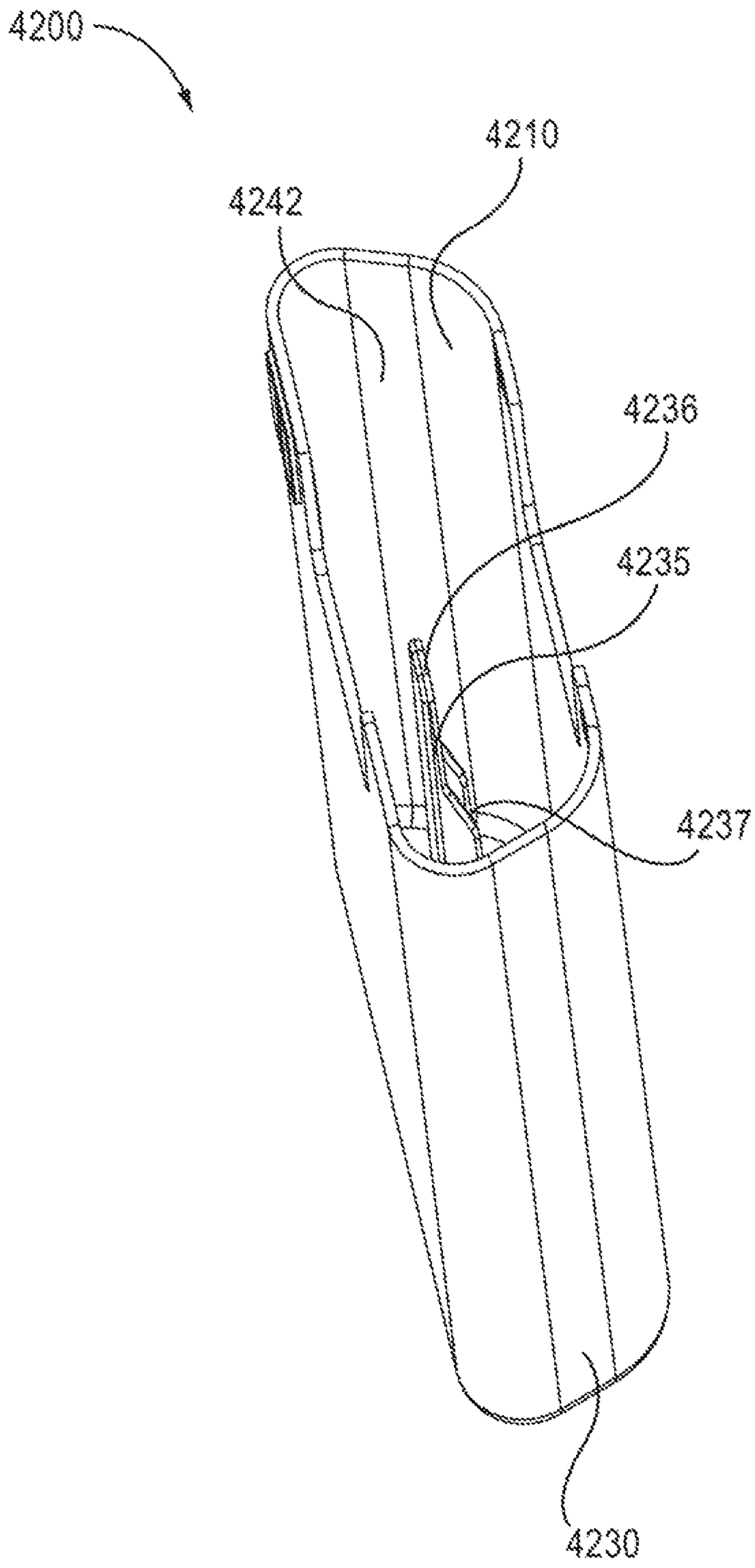

FIG.23

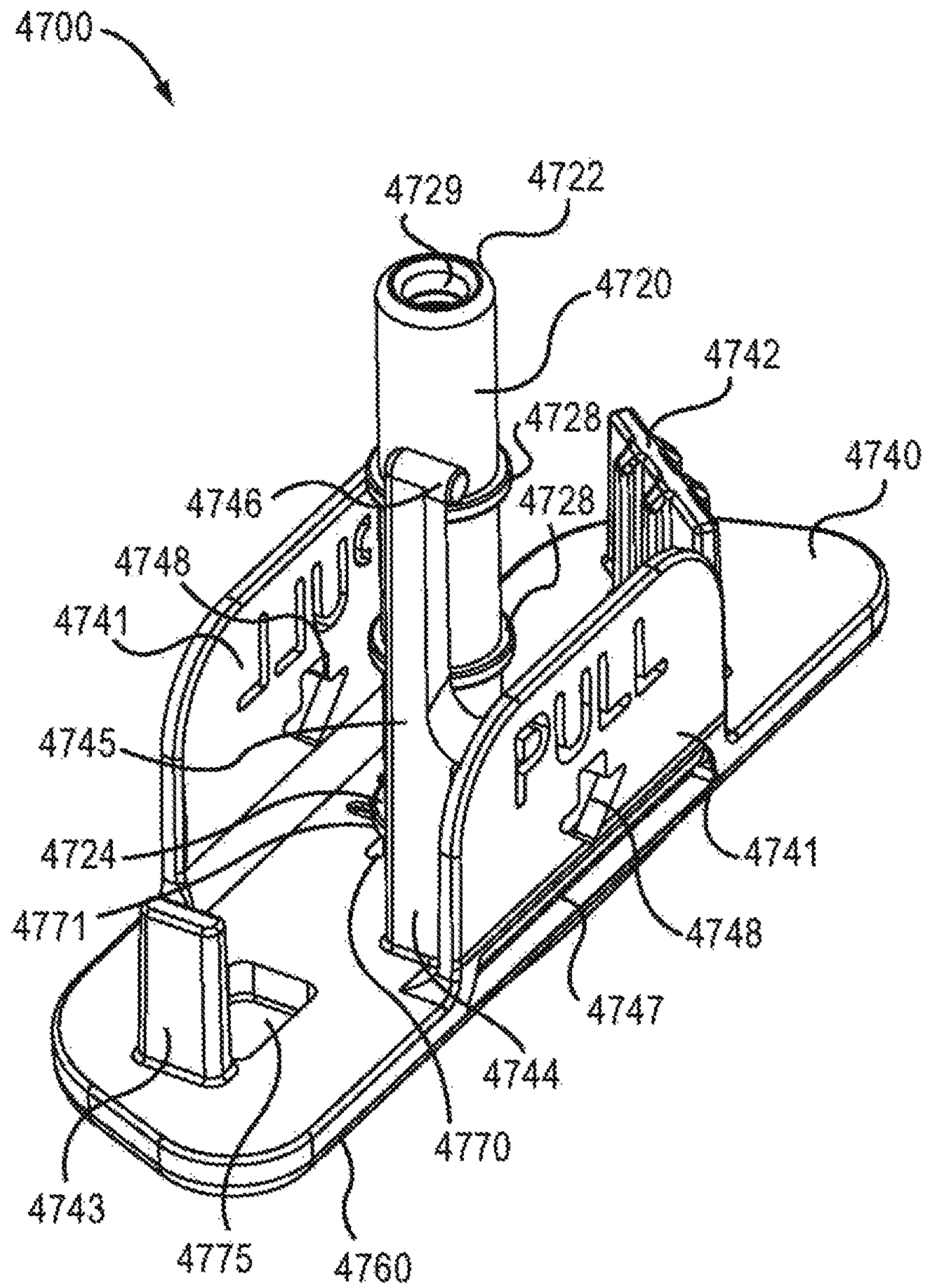
4700
4729
4722
4720
4742
4728
4740
4746
4728
4748
4741
PULL
PULL
4745
4724
4741
4771
4748
4747
4744
4770
4743
4775
4760

FIG. 24A

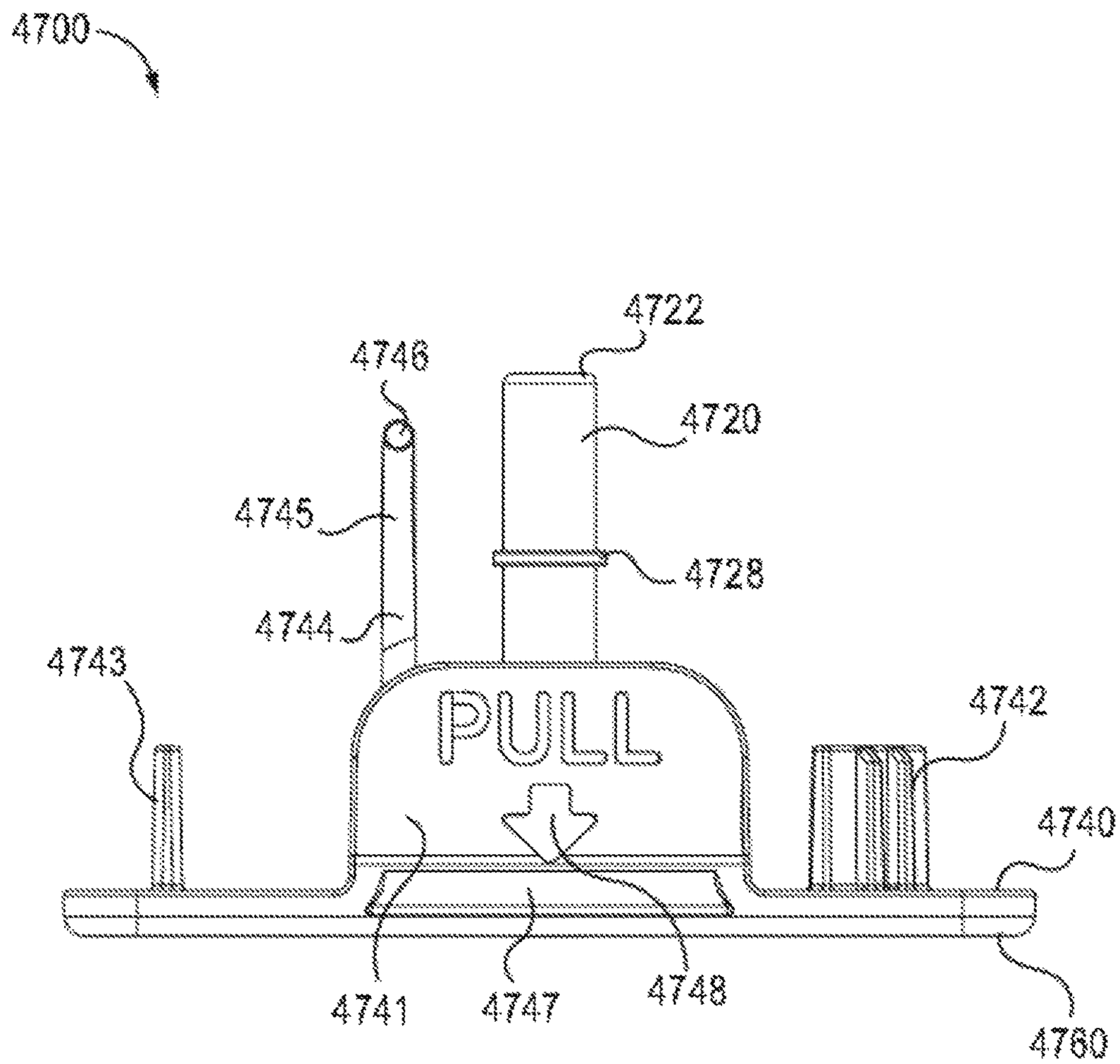
4700
4722
4746
4720
4745
4728
4744
4743
PULL
4742
4740
4741
4747
4748
4760

FIG. 24B

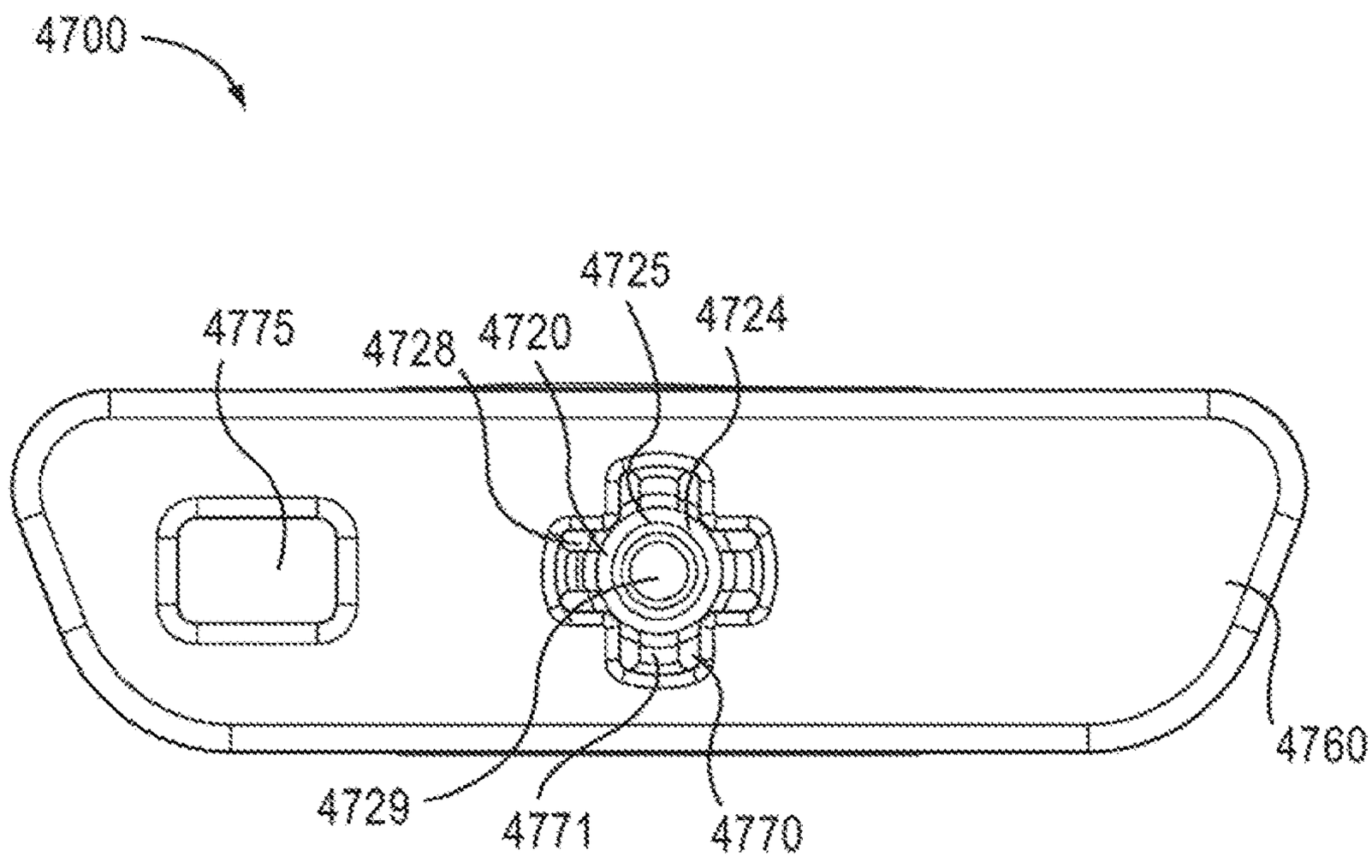

FIG.25

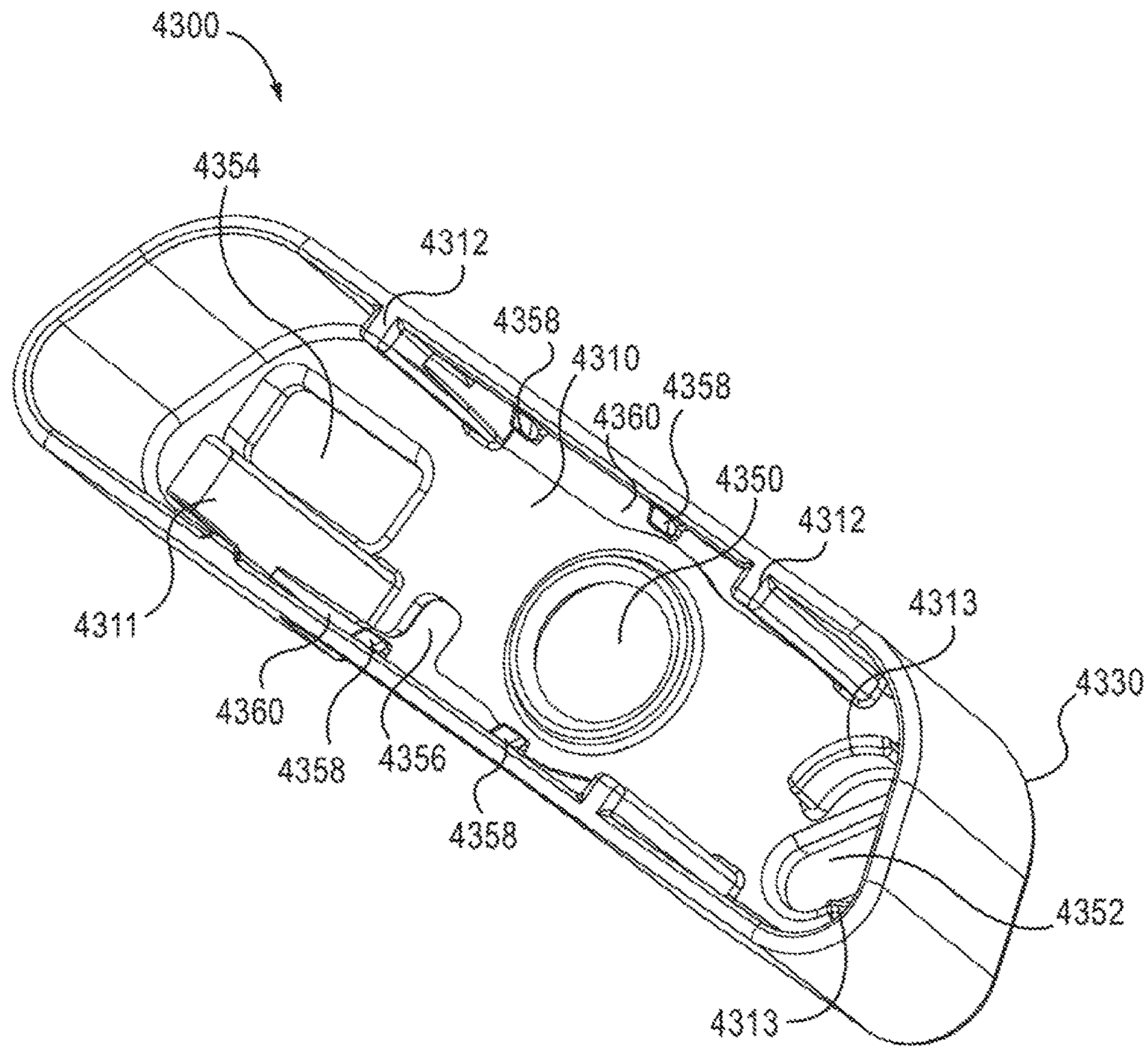
4300
4354
4312
4358
4310
4358
4360
4350
4312
4313
4330
4311
4360
4358
4356
4358
4352
4313

FIG.26

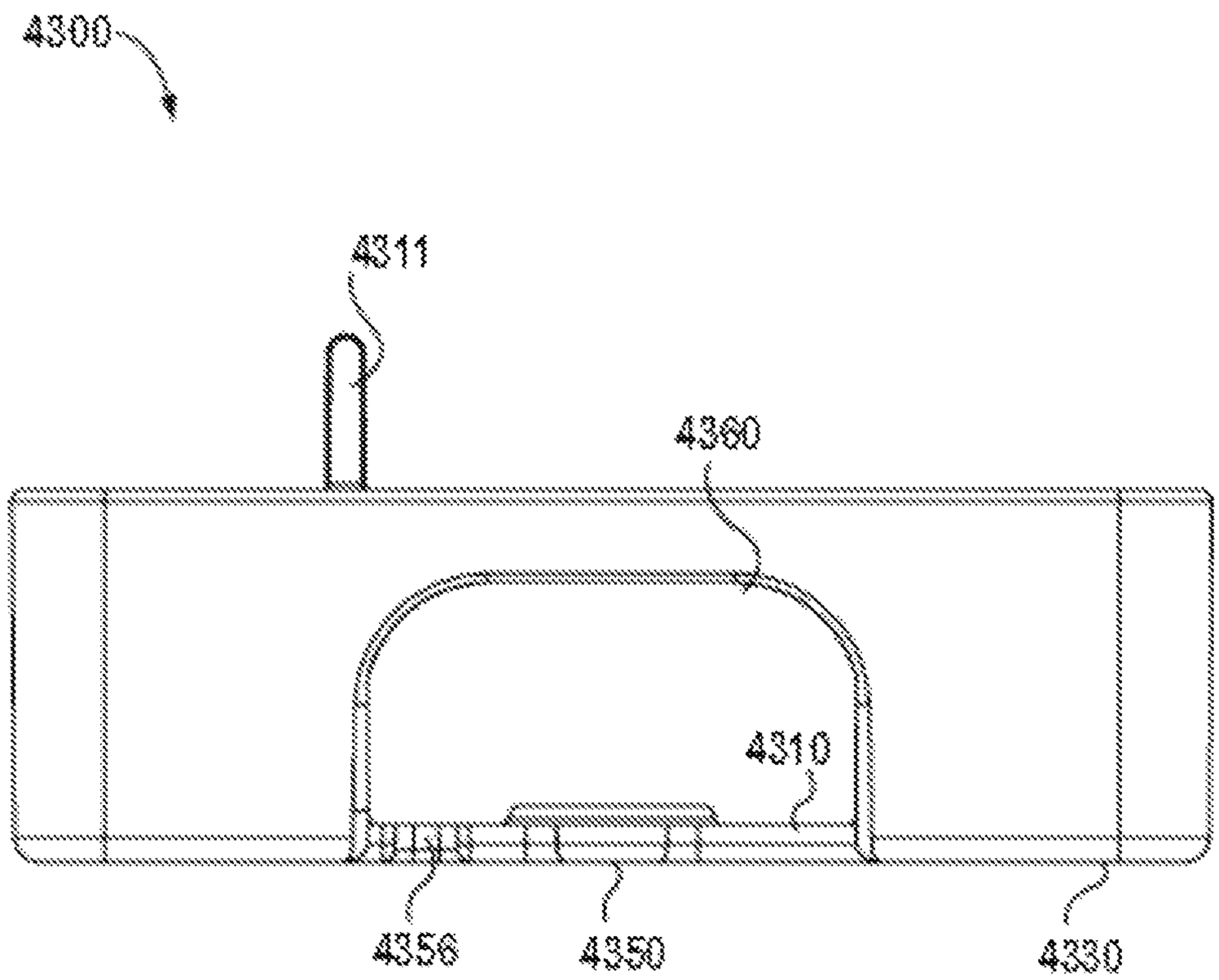

FIG. 26A

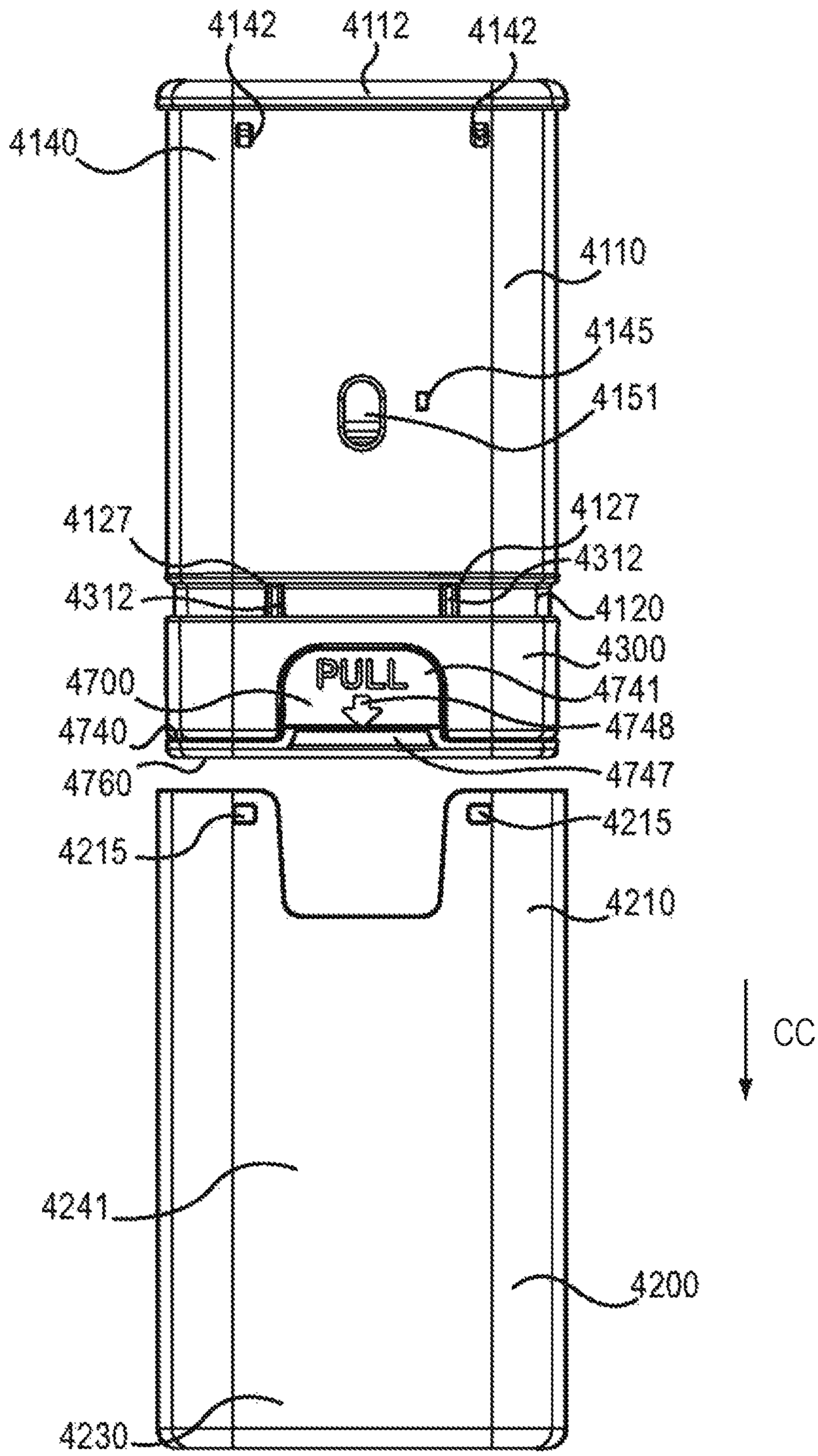
4142
4112
4142
4140
4110
4145
4151
4127
4127
4312
4312
4120
4300
PULL
4700
4741
4740
4748
4760
4747
4215
4215
4210
CC
4241
4200
4230

FIG. 27

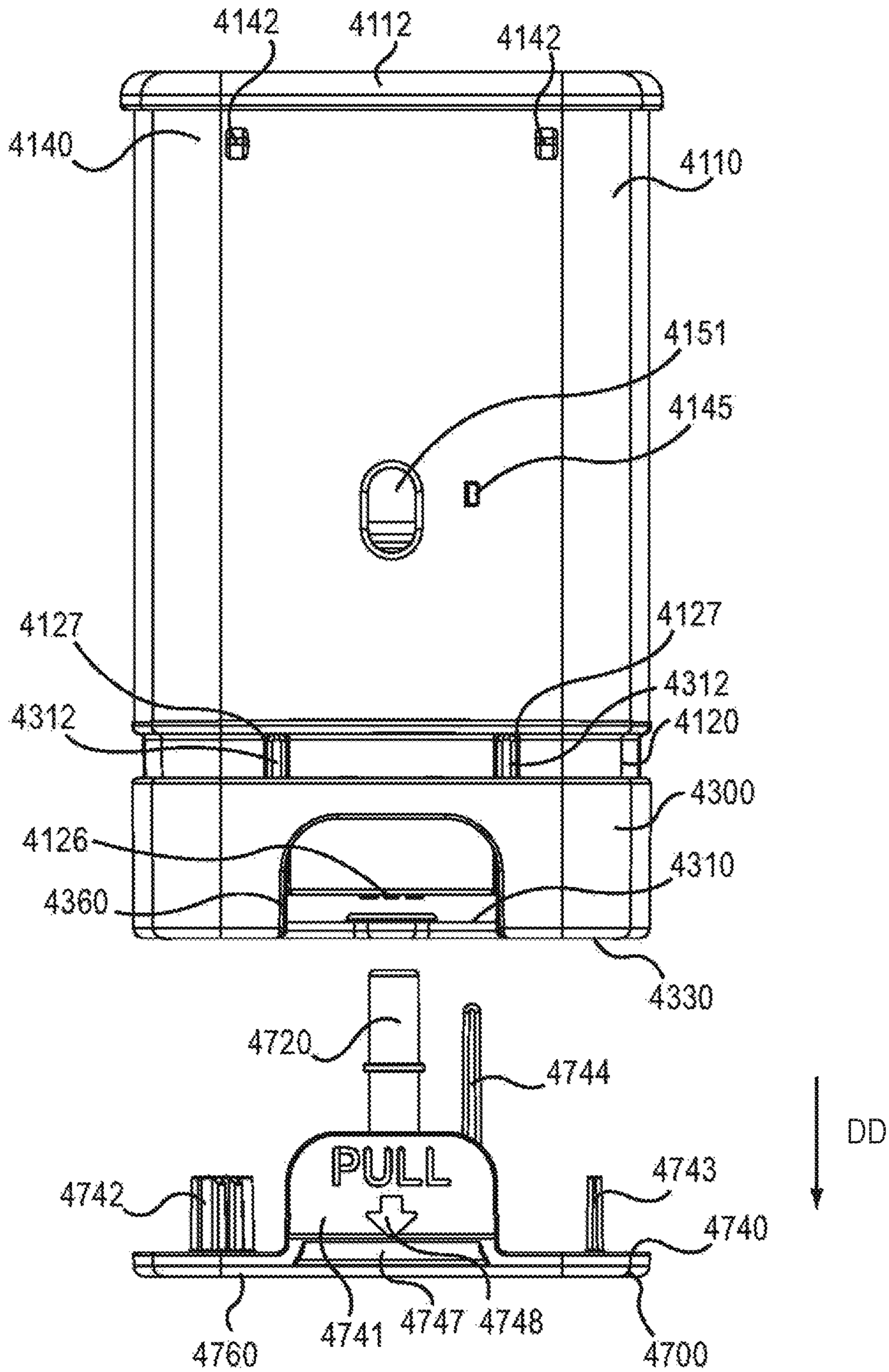
4142
4112
4142
4140
4110
4151
4145
4127
4127
4312
4312
4120
4300
4126
4310
4360
4330
4720
4744
DD
PULL
4743
4742
4740
4760
4741
4747
4748
4700

FIG. 28

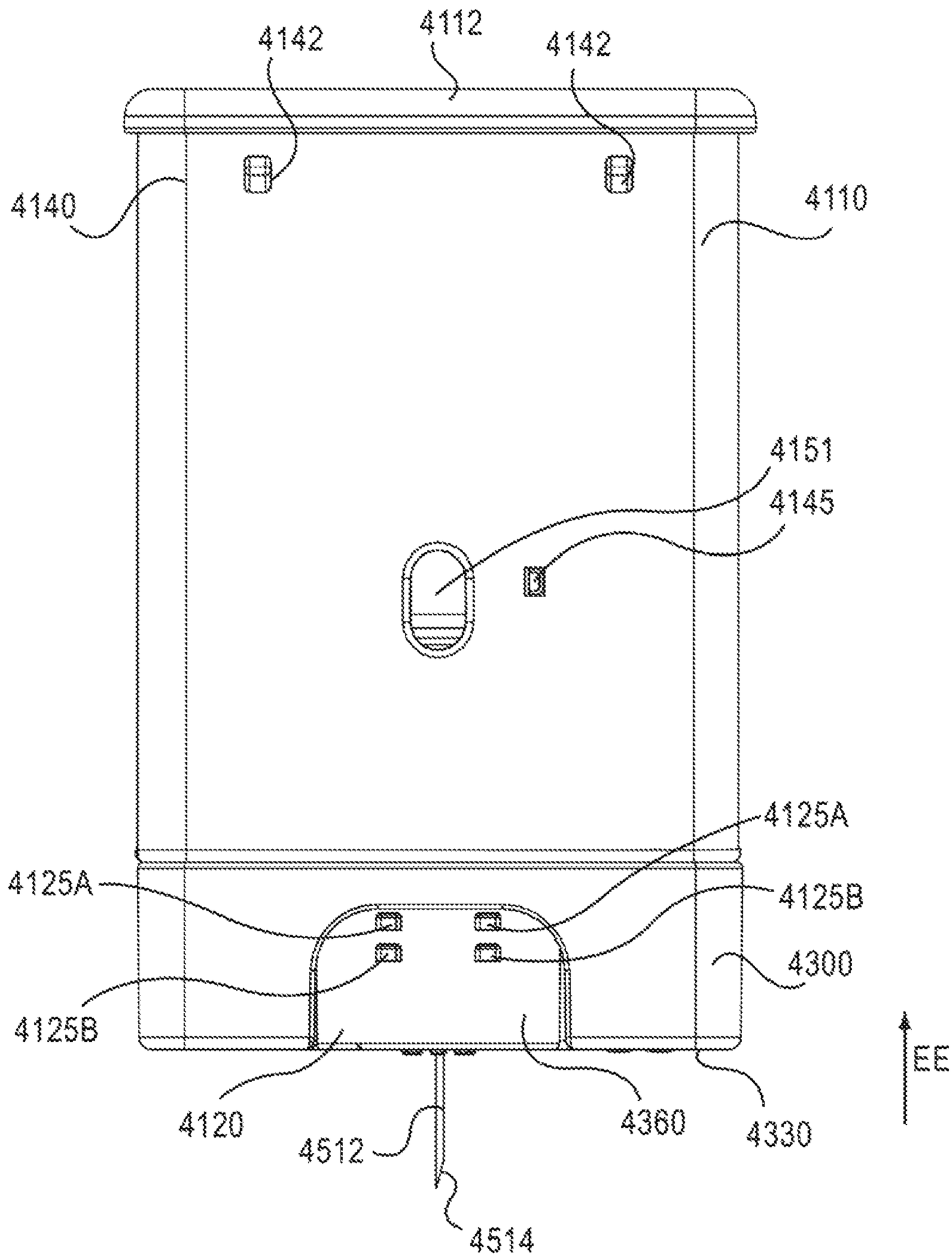
4142
4112
4142
4140
4110
4151
4145
4125A
4125A
4125B
4125B
4300
EE
4120
4512
4360
4330
4514

FIG.29

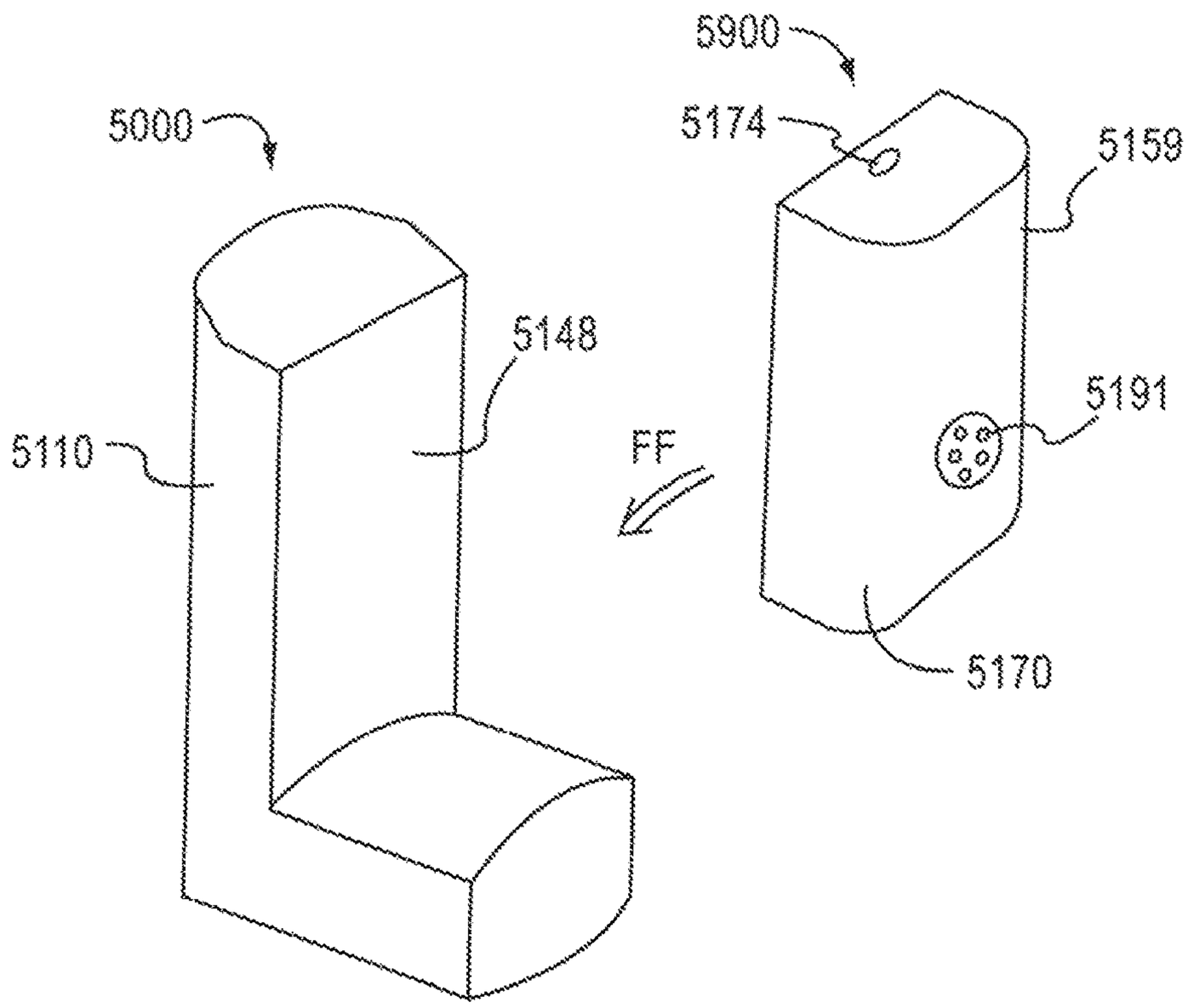
5900
5000
5174
5159
5148
5191
5110
FF
5170

FIG.30

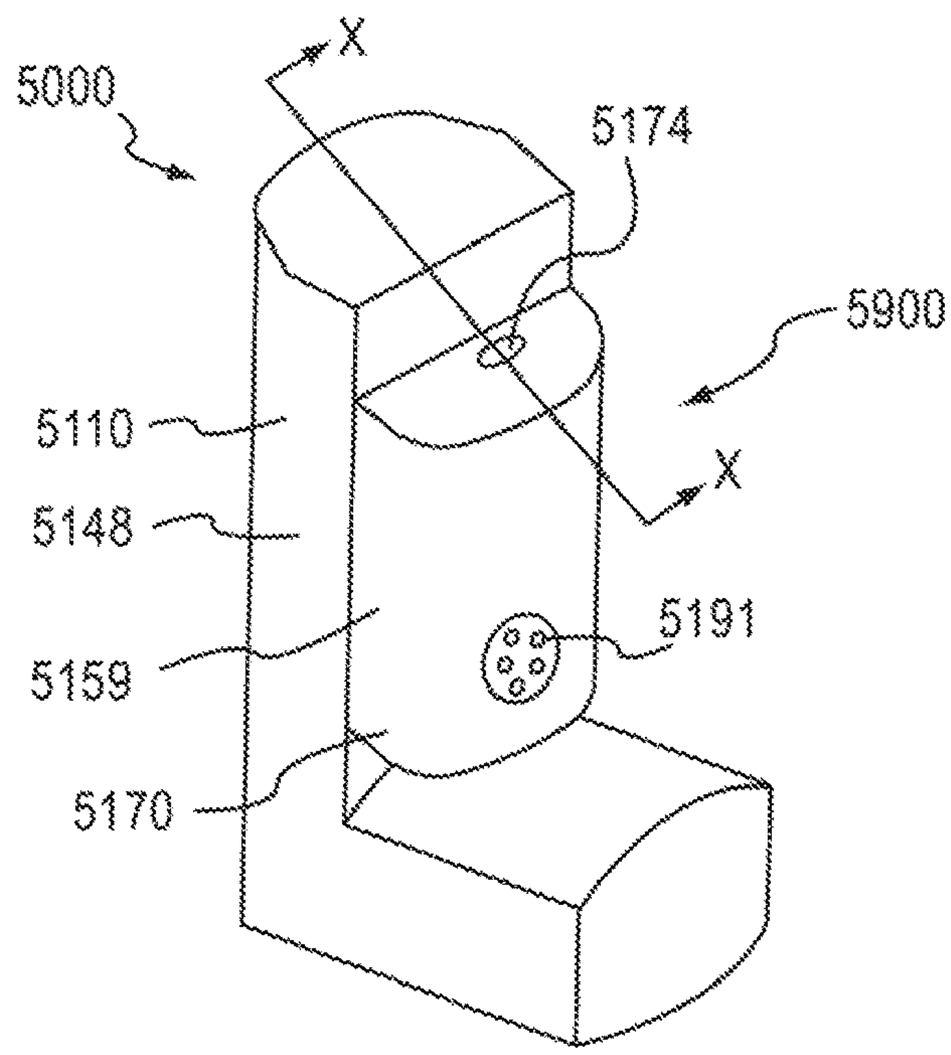
X
5000
5174
5900
5110
X
5148
5191
5159
5170

FIG.31

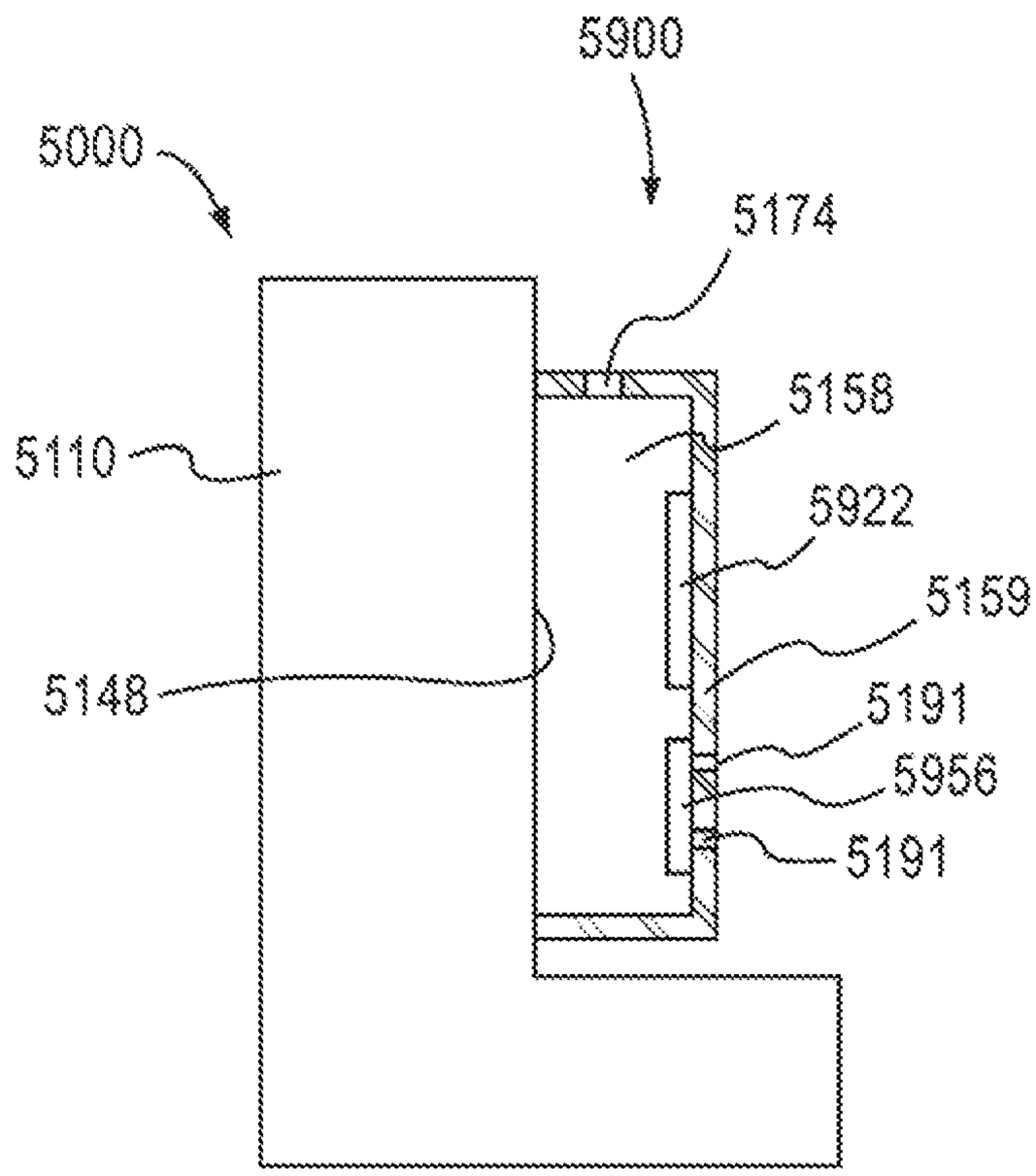

FIG.32

MEDICAMENT DELIVERY DEVICE CONFIGURED TO PRODUCE WIRELESS AND AUDIBLE OUTPUTS

CROSS-REFERENCE TO RELATED APPLICATIONS

This application is a continuation application of U.S. patent application Ser. No. 13/234,649, entitled "Simulated Medicament Delivery Device Configured to Produce an Audible Output," filed Sep. 16, 2011, which is a continuation of U.S. patent application Ser. No. 12/180,708, now U.S. Pat. No. 8,021,344, entitled "Medicament Delivery Device Configured to Produce an Audible Output," filed Jul. 28, 2008, each of which is incorporated herein by reference in its entirety.

BACKGROUND

The invention relates generally to a medical device, and more particularly to a medicament delivery device having an electronic circuit system that produces an audible output.

Exposure to certain substances, such as, for example, peanuts, shellfish, bee venom, certain drugs, toxins, and the like, can cause allergic reactions in some individuals. Such allergic reactions can, at times, lead to anaphylactic shock, which can cause a sharp drop in blood pressure, hives, and/or severe airway constriction. Accordingly, responding rapidly to mitigate the effects from such exposures can prevent injury and/or death. For example, in certain situations, an injection of epinephrine (i.e., adrenaline) can provide substantial and/or complete relief from the allergic reaction. In other situations, for example, an injection of an antidote to a toxin can greatly reduce and/or eliminate the harm potentially caused by the exposure. Because emergency medical facilities may not be available when an individual is suffering from an allergic reaction, some individuals carry a medicament delivery device, such as, for example, an auto-injector, to rapidly self-administer a medicament in response to an allergic reaction.

To actuate such a medicament delivery device, however, the user may be required to execute a series of operations. For example, to actuate some known auto-injectors, the user must remove a protective cap, remove a locking device, place the auto-injector in a proper position against the body and then press a button to actuate the auto-injector. Failure to complete these operations properly can result in an incomplete injection and/or injection into an undesired location of the body. In certain instances, for example, users who have become confused in the operation of some known auto-injectors have inadvertently injected the medicament into their thumb by improperly positioning the auto-injector.

The likelihood of improper use of known medicament delivery devices can be compounded by the nature of the user and/or the circumstances under which such devices are used. For example, many users are not trained medical professionals and may have never been trained in the operation of such devices. Moreover, in certain situations, the user may not be the patient, and may therefore have no experience with the medicament delivery device. Similarly, because some known medicament delivery devices are configured to be used relatively infrequently in response to an allergic reaction or the like, even those users familiar with the device and/or who have been trained may not be well practiced at operating the device. Finally, such devices are often used during an emergency situation, during which even experienced and/or trained users may be subject to

confusion, panic, and/or the physiological effects of the condition requiring treatment.

Some known medicament delivery devices include printed instructions to inform the user of the steps required to properly deliver the medicament. Such printed instructions, however, can be inadequate for the class of users and/or the situations described above. Moreover, because some known medicament delivery devices, such as, for example, auto-injectors, pen injectors, inhalers or the like, can be compact, such printed instructions may be too small to read and comprehend during an emergency situation.

Some known medicament delivery devices can produce sounds, such as a beep or a click, that can be used as prompts to users of medicament delivery devices. The sounds of such know devices and the manner in which the sounds are produced, however, provide limited information to the user. For example, some known medicament delivery devices produce a single tone to indicate that a proper dosage has been set but cannot provide a user with instructions associated with the use of the device. Moreover, the sound level and/or the quality of the sound produced by such known medicament delivery devices is limited by the size, performance, and/or cost associated with the speaker and/or electronic components necessary to produce the sounds.

Thus, a need exists for medicament delivery systems and/or devices that provide instructions, messages, information, and/or directions that are easily understood and/or heard by a user in any type of situation.

SUMMARY

Medicament delivery devices are described herein. In some embodiments, an apparatus includes a medicament delivery device and an electronic circuit system. The medicament delivery device includes a housing, a medicament container, and a medicament delivery member. The electronic circuit system is coupled to the housing and includes an audible output device and a cover. The housing of the medicament delivery device and the cover of the electronic circuit system collectively define an acoustic enclosure. The audible output device is configured to be disposed within the acoustic enclosure.

BRIEF DESCRIPTION OF THE DRAWINGS

FIG. **1** is a schematic illustration of a medicament delivery device having an acoustic enclosure, according to an embodiment of the invention.

FIG. **2** is a schematic illustration of a medicament delivery device having a ported acoustic enclosure, according to an embodiment of the invention.

FIG. **3** is a schematic illustration of a medicament delivery device according to an embodiment of the invention.

FIGS. **4**A and **4**B are perspective views of a medicament delivery device according to an embodiment of the invention, in a first configuration.

FIG. **5** is a front view of the medicament delivery device illustrated in FIGS. **4**A and **4**B with the cover removed.

FIG. **6** is a back view of the medicament delivery device illustrated in FIGS. **4**A and **4**B with the cover removed.

FIG. **7** is a front view of a portion of the medicament delivery device illustrated in FIGS. **4**A and **4**B.

FIG. **8** is a perspective view of a portion of the medicament delivery device illustrated in FIGS. **4**A and **4**B.

FIG. **9** is a bottom perspective view of a housing of the medicament delivery device illustrated in FIGS. **4**A and **4**B.

FIG. **10** is a top perspective view of a housing of the medicament delivery device illustrated in FIGS. **4**A and **4**B.

FIG. **11** is a perspective view of a proximal cap of the medicament delivery device illustrated in FIGS. **4**A and **4**B.

FIG. **12** is a front view of a medicament delivery mechanism of the medicament delivery device illustrated in FIGS. **4**A and **4**B.

FIG. **13** is a back view of an electronic circuit system of the medicament delivery device illustrated in FIGS. **4**A and **4**B.

FIG. **14** is a front view of a portion of the electronic circuit system of the medicament delivery device illustrated in FIG. **13**.

FIG. **15** is a back view of a printed circuit board of the electronic circuit system shown in FIG. **14**.

FIG. **16** is a schematic illustration of the electronic circuit system shown in FIG. **13**.

FIG. **17** is a side view of the electronic circuit system of the medicament delivery device illustrated in FIG. **13**.

FIG. **18** is a front view of a cover of the electronic circuit system illustrated in FIG. **13**.

FIG. **19** is a perspective view of the cover of the electronic circuit system illustrated in FIG. **13**.

FIG. **20** is a perspective view of a battery clip of the electronic circuit system illustrated in FIG. **13**.

FIG. **20**A is a perspective view of a portion of an electronic circuit system of the medical injector illustrated in FIGS. **4**A and **4**B, in a first configuration.

FIG. **21** is a front view of the medicament delivery device illustrated in FIGS. **4**A and **4**B in a first configuration showing the electronic circuit system.

FIGS. **21**A, **21**B, and **21**C are front views of a portion of the electronic circuit system of the medical injector labeled as Region Z in FIG. **21** in a first configuration, a second configuration, and a third configuration, respectively.

FIGS. **22** and **23** are perspective views of a cover of the medicament delivery device illustrated in FIGS. **4**A and **4**B.

FIG. **24** is a perspective view of a safety lock of the medicament delivery device illustrated in FIGS. **4**A and **4**B.

FIG. **24**B is a front view of the safety lock of the medical injector illustrated in FIG. **24**A.

FIG. **25** is a bottom view of the safety lock of the medicament delivery device illustrated in FIGS. **24**A and **24**B.

FIG. **26** is a perspective view of a base of the medicament delivery device illustrated in FIGS. **4**A and **4**B.

FIG. **26**A is a front view of the base of the medical injector illustrated in FIGS. **4**A and **4**B.

FIG. **27** is a back view of the medicament delivery device illustrated in FIGS. **4**A and **4**B in a second configuration.

FIG. **28** is a back view of the medicament delivery device illustrated in FIGS. **4**A and **4**B in a third configuration.

FIG. **29** is a back view of the medicament delivery device illustrated in FIGS. **4**A and **4**B in a fourth configuration.

FIG. **30** is a schematic illustration of a medicament delivery device and an electronic circuit system assembly according to an embodiment of the invention.

FIG. **31** is a schematic illustration of the electronic circuit system assembly shown in FIG. **30** coupled to the medicament delivery device shown in FIG. **30**.

FIG. **32** is a cross-sectional view of the electronic circuit system assembly and the medicament delivery device shown in FIG. **31**, taken along a plane including line X-X.

DETAILED DESCRIPTION

In some embodiments, an apparatus includes a medicament delivery device and an electronic circuit system. The medicament delivery device includes a housing, a medicament container, and a medicament delivery member. The medicament container and at least a portion of the medicament delivery member are disposed within the housing. The electronic circuit system is coupled to the housing and includes an audible output device and a cover. The housing of the medicament delivery device and the cover of the electronic circuit system collectively define an acoustic enclosure. The audible output device, which can be, for example, a speaker, is configured to be disposed within the acoustic enclosure.

In some embodiments, an apparatus includes a medicament delivery device and an electronic circuit system. The medicament delivery device includes a housing and a medicament container. The medicament container is disposed within the housing. The electronic circuit system is coupled to the housing and includes a speaker and a cover. The speaker includes a front portion and a back portion. The front portion of the speaker is configured to output a first audible output including a first set of sound waves. The back portion of the speaker is configured to output a second audible output including a second set of sound waves. The housing of the medicament delivery device defines a first opening through which the first set of sound waves is configured to travel. The cover of the electronic circuit system defines a second opening through which the second set of sound waves is configured to travel.

In some embodiments, an apparatus includes a medicament delivery device and an electronic circuit system, the medicament delivery device including a housing, a medicament container, and a medicament delivery member. The medicament container and at least a portion of the medicament delivery member are disposed within the housing. The electronic circuit system is coupled to the housing and includes an audio processor and an audible output device. The audio processor is configured to output an electronic signal associated with recorded speech to the audible output device via an electronic path devoid of an amplifier. The audible output device can be configured to output an audible output in response to the electronic signal.

In some embodiments, an apparatus includes a simulated medicament delivery device and an electronic circuit system coupled to the simulated medicament delivery device. The simulated medicament delivery device can be configured, for example, to simulate the look, feel and/or functionality associated with a pen injector, an auto-injector, an inhaler and/or a transdermal delivery device. The electronic circuit system is configured to output an electronic output associated with a use of the simulated medicament delivery device. The electronic output can include, for example, a signal associated with a visual output, an audible output, a haptic output, an olfactory output and/or a taste output. Moreover, the electronic output can include, for example, an instruction for using the simulated medicament delivery device and/or a medicament delivery device

As used in this specification including the appended claims, the words "proximal" and "distal" refer to direction closer to and away from, respectively, an operator (e.g., surgeon, physician, nurse, technician, etc.) of the medical device. Thus, for example, the end of the medicament delivery device contacting the patient's body would be the distal end of the medicament delivery device, while the end opposite the distal end would be the proximal end of the medicament delivery device.

FIG. **1** is a schematic illustration of a medicament delivery device **1000** having an acoustic enclosure, according to an embodiment of the invention. The medicament delivery

device **1000** includes a housing **1110**, a medicament container **1560**, a medicament delivery member **1512**, and an electronic circuit system **1900**. The medicament container **1560**, which can be, for example, a pre-filled cartridge, a vial, an ampule, or the like, is disposed within the housing **1110**. At least a portion of the medicament delivery member **1512** is disposed within the housing **1110**. In some configurations, the medicament delivery member **1512** can be in fluid communication with the medicament container **1560**. In this manner, a medicament can be conveyed from the medicament container **1560** to a region outside the housing **1110** via the medicament delivery member **1512**. The medicament delivery member **1512** can include, for example, a needle, a nozzle, a mouthpiece, or the like.

In some embodiments, the medicament delivery device **1000** can be any suitable medical injector for injecting a medicament into a body of a patient. For example, the medicament delivery device **1000** can be a syringe, pen injector, auto-injector, or the like. In other embodiments, the medicament delivery device **1000** can be an inhaler. In yet another embodiment, the medicament delivery device **1000** can be a transdermal delivery system. In some embodiments, the medicament delivery device **1000** can be a chronic-care medicament delivery device. Said another way, the medicament delivery device **1000** can be a reusable device containing multiple doses of medicament. For example, a medicament delivery device **1000** having multiple doses of medicament can be used to manage insulin delivery or the delivery of other medicaments (e.g., to treat Multiple Sclerosis, Anemia, Rheumatoid Arthritis, Osteoporosis or the like), which can, in some instances, require daily, weekly, and/or monthly dosages. In other embodiments, the medicament delivery device **1000** can be a single-use device. Said another way, the medicament delivery device **1000** can contain a single dose of medicament. In yet other embodiments, the medicament delivery device **1000** can be a simulated medicament delivery device or trainer similar to the simulated medicament delivery devices or trainers described in U.S. Patent Publication Number 2008/0059133, entitled "Medical Injector Simulation Device," filed Feb. 27, 2007, which is incorporated herein by reference in its entirety.

The electronic circuit system **1900** includes an audible output device **1956** and a cover **1170** coupled to the housing **1110**. The audible output device **1956**, which can be, for example, a microspeaker, is configured to produce an audible output OP**11**. Said another way, the audible output device **1956** is configured to produce a set of sound waves in response to an electronic signal from the electronic circuit system **1900**. In some embodiments, the electronic circuit system **1900** and the audible output device **1956** can produce the audible output OP**11** in association with the use of the medicament delivery device **1000**.

The electronic circuit system **1900** can include any suitable electronic components operatively coupled to produce and/or output the audible output OP**11** and/or to perform the functions described herein. In some embodiments, the electronic circuit system **1900** can be similar to the electronic circuit systems described in U.S. Patent Publication Number 2008/0033393, entitled "Devices, Systems and Methods for Medicament Delivery," filed Jan. 9, 2007, which is incorporated herein by reference in its entirety.

The housing **1110** and the cover **1170** of the electronic circuit system **1900** collectively define a region **1153**. Although the region **1153** is illustrated in FIG. **1** as a two-dimensional area, the region **1153** is associated with an enclosed volume or space within the housing **1110**. Similarly stated, the region **1153** can be a cavity, a chamber, or an enclosure defined by the housing **1110** and the cover **1170**. In some embodiments, the region **1153** can be associated with a volume or space within the housing **1110** having at least one opening (not shown in FIG. **1**) to an area outside of the housing **1110**.

At least a portion of the electronic circuit system **1900** is disposed within the region **1153** of the housing **1110**. The electronic circuit system **1900** is coupled to the housing **1110** such that the audible output device **1956** is disposed within the region **1153** defined by the housing **1110** and the cover **1170**. Moreover, the volume associated with the region **1153** is larger than the volume of the audible output device **1956**. In this manner, the region **1153** can function as an acoustic enclosure for the audible output device **1956**. As an acoustic enclosure, the region **1153** can be used to minimize or attenuate noise and/or to enhance the audible output OP**11** of the audible output device **1956**. In some embodiments, the region **1153** can reduce noise by isolating and/or absorbing sound and/or vibration associated with the audible output device **1956**. In some embodiments, the region **1153** can enhance the audible output OP**11** of an audible output device **1956** by acoustically amplifying the audible output at one or more acoustic resonant frequencies defined by the physical characteristics of the region **1153** (e.g., volume, shape, or the like). In some embodiments, for example, the region **1153** defines at least one resonant acoustic frequency within the acoustic frequency range of the audible output device **1956**.

The audible output OP**11** can be, for example, an audible representation of a recorded message or speech, a single tone or a sequence of tones, and/or the like. In some embodiments, the audible output OP**11** can be associated with a pre-recorded speech, instruction, or prompt for using the medicament delivery device **1000**. In other embodiments, the audible output OP**11** can be associated with post-use instructions or prompts, such as, for example, a recorded message notifying the user that the medicament delivery event is complete, instructing the user on post-medicament delivery disposal and safety procedures, instructing the user to seek post-medicament delivery medical treatment, and/or the like. In yet other embodiments, the audible output OP**11** can be associated with the patient's compliance in using the medicament delivery device **1000**. In some embodiments, the audible output OP**11** can be associated with an actuation of the medicament delivery device **1000**. Said another way, the audible output device **1956** can be configured to output the audible output OP**11** in response to the triggering or activating of a function, procedure, and/or mode associated with the medicament delivery device **1000**.

In yet other embodiments, the electronic circuit system **1900** can produce an electronic output associated with the patient's compliance in using medicament the delivery device **1000**. In some embodiments, such an electronic output can be associated with an actuation of the medicament delivery device **1000**. Said another way, the electronic circuit system **1900** can be configured to output an electronic output in response to actuation of the medicament delivery device **1000**. Such electronic outputs can be, for example, a visual output such as, for example, a text message to display on a screen (not shown), and/or an LED. In some embodiments, an electronic output can be an audio output as described herein, such as, for example, recorded speech, a series of tones, and/or the like. In other embodiments, an electronic output can be a wireless signal configured to be received by a remote device. For example, in some embodiments, the electronic output can be a signal sent to a

compliance tracking monitor to record the data and/or time of use of the medicament delivery device **1000**.

Although the region **1153** is shown as being fully enclosed, in other embodiments the region **1153** can be partially enclosed. In some embodiments, for example, the cover **1170** and/or the housing **1110** define an opening (not shown) through which the audible output device **1956** can be disposed within the region **1153**. In some embodiments, the shape of the audible output device **1956** can substantially match the shape of the partially enclosed region **1153**. In other embodiments, the volume of the audible output device **1956** disposed within the partially enclosed region **1153** is smaller than the volume of the partially enclosed region **1153**.

FIG. **2** is a schematic illustration of a medicament delivery device **2000** having a ported acoustic enclosure, according to an embodiment of the invention. The medicament delivery device **2000** includes a housing **2110**, a medicament container **2560**, and an electronic circuit system **2900**. The medicament container **2560**, which can be, for example, a pre-filled cartridge, a vial, an ampule, or the like, is disposed within the housing **2110**.

The medicament delivery device **2000** can be a reusable device containing multiple doses of medicament. For example, a medicament delivery device **2000** having multiple doses of medicament can be used to manage insulin delivery or the delivery of other medicaments (e.g., to treat Multiple Sclerosis, Anemia, Rheumatoid Arthritis, Osteoporosis or the like), which can, in some instances, require daily, weekly, and/or monthly dosage. In other embodiments, the medicament delivery device **2000** can be a single-use device. Said another way, the medicament delivery device **2000** can contain a single dose of medicament. In yet other embodiments, the medicament delivery device **2000** can be a simulated medicament delivery device or trainer.

The electronic circuit system **2900** can include any suitable electronic components operatively coupled to produce and/or output the audible output and/or to perform the functions described herein. The electronic circuit system **2900** includes an audible output device **2956** and a cover **2170** coupled to the housing **2110**. The audible output device **2956**, which can be, for example, a microspeaker, includes a front portion **2004** and a back portion **2003**. The front portion **2004** of the audible output device **2956** is configured to output a first audible output OP**21** that includes a first set of sound waves. The back portion **2003** of the audible output device **2956** is configured to output a second audible output OP**22** that includes a second set of sound waves. The first set sound waves associated with the first audible output OP**21** can result from changes in air pressure that occur at the front portion **2004** of the audible output device **2956** from, for example, a controlled movement of a portion of the audible output device **2956** (e.g., a cone, membrane, diaphragm, or the like). The second set of sound waves associated with the second audible output OP**22** can result from changes in air pressure that occur at the back portion **2003** of the audible output device **2956** from, for example, the movement of a portion of the audible output device **2956**. In some embodiments, a single moving portion (e.g., a speaker cone) can produce both the first set of sound waves and the second set of sound waves. For example, a movement of the cone that produces an increase in air pressure at the front portion **2004** of the audible output device **2956** results in a corresponding decrease in air pressure at the back portion **2003** of the audible output device **2956**. Similarly, a movement of the cone that produces a decrease in air pressure at the front portion **2004** of the audible output device **2956** results in a corresponding increase in air pressure at the back portion **2003** of the audible output device **2956**. Accordingly, in some embodiments, the first set of sound waves produced at the front portion **2004** of the audible output device **2956** can be out-of-phase with the second set of sound waves produced at the back portion **2003** of the audible output device **2956**. In this manner, the electronic circuit system **2900** and the audible output device **2956** can produce an audible output associated with the use of the medicament delivery device **2000**.

The housing **2110** and the cover **2170** of the electronic circuit system **2900** collectively define a region **2153**. Although the region **2153** is illustrated in FIG. **2** as a two-dimensional area, the region **2153** is associated with an enclosed volume or space within the housing **2110**. Similarly stated, the region **2153** can be a cavity, a chamber, or an enclosure defined by the housing **2110** and the cover **2170**. At least a portion of the electronic circuit system **2900** and/or the audible output device **2956** is disposed within the region **2153** of the housing **2110**. In this manner, the region **2153** can function as an acoustic enclosure for the audible output device **2956**.

The cover **2170** defines an opening **2001** through which the first set of sound waves associated with the audible output OP**21** can travel. Similarly, the housing **2110** defines an opening **2002** through which the second set of sound waves associated with the audible output OP**22** can travel. The opening **2002** can be referred to, for example, as a "port" of the acoustic enclosure associated with the region **2153**. In some embodiments, the opening **2001** and the opening **2002** can be collectively configured such that the first set of sound waves associated with the audible output OP**21** when exiting the housing **2110** through the opening **2001** is substantially in phase with the second set of sound waves associated with the audible output OP**22** when exiting the housing **2110** through the opening **2002**. Similarly stated, in some embodiments, the opening **2002** can be positioned and/or oriented relative to the opening **2001** to compensate, reduce and/or eliminate the phase difference that can exist between the first set of sound waves of the audible output OP**21** and the second set of sound waves of the audible output OP**22** within the housing **2110**. Said another way, in some embodiments, the distance that the first set of sound waves of the audible output OP**21** travels to exit through the opening **2001** (e.g., the distance between the front portion **2004** of the audible output device **2956** and the exit of the opening **2001**) and the distance that the second set of sound waves of the audible output OP**22** travels to exit through the opening **2002** (e.g., the distance between the back portion **2003** of the audible output device **2956** and the exit of the opening **2002**) is such that the first set of sound waves associated with the audible output OP**21** when exiting the housing **2110** is substantially in phase with the second set of sound waves associated with the audible output OP**22** when exiting the housing **2110** through the opening **2002**. In this manner, the phase compensation that results from the difference between the exit path of the first set of sound waves of the audible output OP**21** and the exit path of the second set of sound waves of the audible output OP**22** can increase (e.g., constructively interfere) the overall sound level of the audible output device **2956** outside the housing **2110**.

Although the cover **2170** is shown as defining the opening **2001**, in other embodiments, the housing **2110** can define both the opening **2001** and the opening **2002**. Although the cover **2170** is described as defining a single opening **2001**, in other embodiments, the cover **2170** can define multiple

openings. Similarly, in some embodiments, the housing **2110** can define multiple "ports" or openings. In some embodiments, the opening **2002** is configured to be selectively covered by a moveable member (not shown) of the medicament delivery device **2000**. For example, the opening **2002** can be selectively covered by at least one of a sleeve, a safety lock, or a needle guard.

The audible outputs OP**21** and OP**22** can be related to instructions, notifications, messages, actuations, and/or compliance associated with using the medicament delivery device **2000**. The audible output OP**21** and the audible output OP**22** can be, for example, a recorded message or speech, a single tone or a sequence of tones, and/or the like. In this manner, the electronic circuit system **2900** can output information to the user through the audile outputs OP**21** and OP**22** in an unobtrusive manner and/or without impeding the delivery of the medicaments. The audible outputs OP**21** and OP**22** can be, for example, audible representations of a recorded message or speech, single tones or sequences of tones, and/or the like. In some embodiments, the audible outputs OP**21** and OP**22** can be associated with a prerecorded speech, instruction, or prompt for using the medicament delivery device **2000**. In other embodiments, the audible outputs OP**21** and OP**22** can be associated with post-use instructions or prompts, such as, for example, a recorded message notifying the user that the medicament delivery is complete, instructing the user on post-medicament delivery disposal and safety procedures, instructing the user to seek post-medicament delivery medical treatment, and/or the like. In yet other embodiments, the audible outputs OP**21** and OP**22** can be associated with the patient's compliance in using the medicament delivery device **2000**. In some embodiments, the audible outputs OP**21** and OP**22** can be associated with an actuation of the medicament delivery device **2000**. Said another way, the audible output device **2956** can be configured to output the audible outputs OP**21** and OP**22** in response to the triggering or activating of a function, procedure, and/or mode associated with the medicament delivery device **2000**.

FIG. **3** is a schematic illustration of a medicament delivery device **3000** according to an embodiment of the invention. The medicament delivery device **3000** includes a housing **3110**, a medicament container **3560**, a medicament delivery member **3512**, and an electronic circuit system **3900**. The medicament container **3560** is disposed within the housing **3110**. At least a portion of the medicament delivery member **3512** is disposed within the housing **3110**. The medicament container **3560** and/or the medicament delivery member **3512** can be substantially similar to the medicament container **1560** and/or the medicament delivery member **1512**, respectively, as shown and described above with reference to FIG. **1**.

The electronic circuit system **3900**, which can be can be similar to the electronic circuit system **1900** shown and described above with reference to FIG. **1**, includes an audio processor **3010** and an audible output device **3956**. The audio processor **3010** is configured to output an electronic output S**31** to the audible output device **3956**. The audio processor **3010** can be software-based (e.g., set of instructions executable at a processor, software code) and/or hardware-based (e.g., circuit system, processor, application-specific integrated circuit (ASIC), field programmable gate array (FPGA)). The electronic output S**31** can be associated with, for example, a recorded message or speech, a single tone or a sequence of tones, and/or the like. In some embodiments, the electronic circuit system **3900** and/or the audio processor **3010** can include a separate memory (not shown) in which information associated with a recorded message or speech, tones, or the like can be stored. In this manner, the audio processor **3010** can receive the recorded message or tone information from the memory for processing and to produce the electronic output S**31**. In some embodiments, for example, the audio processor **3010** can include an embedded or built-in memory module in which information associated with the recorded message or tone is stored.

As shown in FIG. **3**, the electronic output S**31** is conveyed from the audio processor **3010** to the audible output device **3956** via an electronic path **3001** devoid of an amplifier. Similarly stated, no amplifiers and/or drivers external to the audio processor **3010** are used to boost or increase the electronic output S**31**. The electronic path **3001** can be defined by any suitable electronic components. For example, in some embodiments, the electronic circuit system **3900** can have the audio processor **3010**, the audible output device **3956**, and/or the electronic path **3001** disposed on one or more printed circuit boards (PCBs), Such an arrangement can reduce the cost and/or complexity of the electronic circuit system **3900**. Moreover, by excluding external amplifiers and/or drivers, the power required to produce the audible output OP**31** can be relatively low, as discussed in more detail herein.

The audible output device **3956**, which can be, for example, a microspeaker, is configured to produce the audible output OP**31** in response to the electronic output S**31**. In this manner, the electronic circuit system **3900** and the audible output device **3956** can produce an audible output associated with the use of the medicament delivery device **3000**, as discussed above.

FIGS. **4A-29** show a medicament delivery device **4000**, according to an embodiment of the invention. FIGS. **4A-4B** are perspective views of the medicament delivery device **4000** in a first configuration (i.e., prior to use). The medicament delivery device **4000** is similar to the medical injectors described in U.S. patent application Ser. No. 12/119,016, entitled "Medicament Delivery Device Having an Electronic Circuit System," filed May 12, 2008, which is incorporated herein by reference in its entirety. The medicament delivery device **4000** includes a housing **4110**, a medicament delivery mechanism **4500** (see e.g., FIG. **12**), an electronic circuit system **4900** (see e.g., FIGS. **13-21**), a cover **4200** (see e.g., FIGS. **22-23**), a safety lock **4700** (see e.g., FIGS. **24-25**) and a base **4300** (see e.g., FIG. **26**). A discussion of the components of the medicament delivery device **4000** will be followed by a discussion of the operation of the medicament delivery device **4000**. In the embodiments described with respect to FIGS. **4A-29**, the medicament delivery device **4000** is a medical injector.

As shown in FIGS. **5-11**, the housing **4110** has a proximal end portion **4140** and a distal end portion **4120**. The housing **4110** defines a first status indicator aperture **4150** and a second status indicator aperture **4151**. The status indicator apertures **4150**, **4151** can allow a patient to monitor the status and/or contents of a medicament container **4560**. For example, by visually inspecting the status indicator apertures **4150**, **4151**, a patient can determine whether the medicament container **4560** contains a medicament and/or whether a medicament has been dispensed.

As shown in FIGS. **9** and **10**, the housing **4110** defines a gas cavity **4154**, a medicament cavity **4157**, and an electronic circuit system cavity **4153**. The gas cavity **4154** has a proximal end portion **4155** and a distal end portion **4156**. The gas cavity **4154** is configured to receive the gas container **4570** and the release member **4540** of the medicament

delivery mechanism **4500** (see e.g., FIG. **12**), as described in further detail herein. The proximal end portion **4155** of the gas cavity **4154** is configured to receive the gas container retention member **4580** of the proximal cap **4112** of the housing **4110**, as described in further detail herein. The gas cavity **4154** is in fluid communication with the medicament cavity **4157** via a gas passageway **4144** (see e.g., FIG. **11**), as described in further detail herein, and the gas cavity **4154** is in fluid communication with a region outside the housing **4110** via a safety lock aperture **4128**.

The medicament cavity **4157** is configured to receive a portion of the medicament delivery mechanism **4500**. In particular, the carrier **4520**, the moveable member **4530** and the needle **4512** of the medicament delivery mechanism **4500** are movably disposed in the medicament cavity **4157**. The medicament cavity **4157** is in fluid communication with a region outside the housing **4110** via a needle aperture **4122**.

The electronic circuit system cavity **4153** is configured to receive the electronic circuit system **4900**. The electronic circuit system cavity **4153** is isolated from the gas cavity **4154** and/or the medicament cavity **4157** via a side wall **4148** (see e.g., FIG. **10**). Said another way, the electronic circuit system cavity **4153** is acoustically separated from and/or fluidically isolated from the gas cavity **4154** and/or the medicament cavity **4157**. As described in more detail herein, the electronic circuit system cavity **4153** can function as an acoustic enclosure to enhance the magnitude and/or quality of the audible output produced by the electronic circuit system **4900**.

The housing **4110** has protrusions **4149** (see e.g., FIG. **8**) configured to stabilize the electronic circuit system **4900** when the electronic circuit system **4900** is disposed within the electronic circuit system cavity **4153**. The housing **4110** also defines connection apertures **4152** configured to receive connection protrusions **4171**A and **4171**B (see e.g., FIG. **13**) of the electronic circuit system **4900**, and aperture **4145** (see e.g., FIG. **6**) configured to receive a portion of a protrusion **4174** of the electronic circuit system **4900**. In this manner, the electronic circuit system **4900** can be coupled to the housing **4110** within the electronic circuit system cavity **4153**. In other embodiments, the electronic circuit system **4900** can be coupled within the electronic circuit system cavity **4153** by other suitable means such as an adhesive, a clip and/or the like.

The proximal end portion **4140** of the housing **4110** includes a proximal cap **4112**, a speaker protrusion **4147** (see e.g. FIGS. **8** and **9**), and cover retention protrusions **4142** (see e.g., FIGS. **4**B and **6**). The speaker protrusion **4147** is configured to maintain a position of an audible output device **4956** relative to the housing **4110** and/or an electronic circuit system cover **4170** when the electronic circuit system **4900** is attached to the housing **4110**. As described in more detail below, in some embodiments, the speaker protrusion **4147** can press the front portion **4957** of the audible output device **4956** against the electronic circuit system cover **4170** to form a substantially airtight (e.g., a substantially hermetic) seal between the front portion **4957** of the audible output device **4956** and the electronic circuit system cover **4170**. A substantially airtight seal can reduce undesirable audible noise that can result from air leaking through a gap between the front portion **4957** of the audible output device **4956** and the electronic circuit system cover **4170**. Moreover, the speaker protrusion **4147** can reduce or minimize undesirable vibration of the audible output device **4956** by holding the audible output device **4956** in a substantially fixed position relative to the electronic circuit system cover **4170**. The cover retention protrusions **4142** are configured to be received within corresponding openings **4215** on the cover **4200**. In this manner, as described in more detail herein, the cover **4200** can be removably coupled to and disposed about at least a portion of the housing **4110**.

As shown in FIG. **11**, the proximal cap **4112** includes a gas container retention member **4580** and defines a gas passageway **4144**. The gas container retention member **4580** is configured to receive and/or retain a gas container **4570** that can contain a pressurized gas. The gas passageway **4144** is configured to allow for the passage of gas contained in the gas container **4570** from the gas cavity **4154** to the medicament cavity **4157**, as further described herein. Said another way, the gas passageway **4144** places the gas cavity **4154** in fluid communication with the medicament cavity **4157**.

As shown in FIGS. **7** and **9**, the distal end portion **4120** of the housing **4110** defines a battery isolation protrusion aperture **4121**, a needle aperture **4122**, a safety lock actuator groove **4123**, a safety lock aperture **4128**, a base actuator groove **4124**, base retention recesses **4125**A, **4125**B, and base rail grooves **4127**. The base **4300** is moveably coupled to the distal end portion **4120** of the housing **4110**. The battery isolation protrusion aperture **4121** is configured to receive the battery isolation protrusion **4235** of the cover **4200** (see e.g., FIG. **23**) when the cover **4200** is disposed about the housing **4110**, as described in further detail herein. When the cover **4200** is moved relative to the housing **4100** to enable the medicament delivery device **4000** (see e.g., FIG. **27**), the battery isolation protrusion aperture **4121** places the electronic circuit system cavity **4153** in fluid communication with a region outside of the housing **4110**. Said another way, when the cover **4200** is moved relative to the housing **4100**, the battery isolation protrusion aperture **4121** defines an opening through which sound waves produced by a back portion **4955** of the audible output device **4956** can exit the housing **4110**.

The needle aperture **4122** is configured to allow the needle **4512** (see e.g., FIG. **12**) to exit the housing **4110** when the medical injector **4000** is actuated. The portion of the sidewall of the housing **4110** that defines the needle aperture **4122** includes multiple sheath retention protrusions **4126**. In some embodiments, the sheath retention protrusions can interact with the plurality of ribs **4728** of the needle sheath **4720** (see e.g. FIGS. **24**A and **24**B) to maintain a position of the needle sheath **4720** relative to the safety lock **4700** when the safety lock **4700** is coupled to the housing **4110** and/or when the safety lock **4700** is being removed from the housing **4110**.

The safety lock actuator groove **4123** is configured to receive an actuator **4744** of the safety lock **4700**. As described in more detail herein, the actuator **4744** is configured to engage and/or activate the electronic circuit system **4900** when the safety lock **4700** is moved with respect to the housing **4110**. The safety lock aperture **4128** is configured to receive a safety lock protrusion **4742** (see e.g., FIGS. **25** and **26**). As described in more detail below, the safety lock protrusion **4742** is received within an opening **4554** between extensions **4552** of a release member **4540** such that activation of the medical injector **4000** is prevented when the safety lock **4700** is in place. The safety lock **4700**, its components and functions are further described herein.

The distal base retention recesses **4125**A are configured to receive the base connection knobs **4358** of the base (see e.g., FIG. **26**) when the base is in a first position relative to the housing **4110**. The proximal base retention recesses **4125**B are configured to receive the base connection knobs **4358** of

the base when the base is in a second position relative to the housing **4110**. The base retention recesses **4125**A, **4125**B have a tapered proximal sidewall and a non-tapered distal sidewall. This allows the base retention recesses **4125**A, **4125**B to receive the base connection knobs **4358** such that the base can move proximally relative to the housing **4110**, but cannot move distally relative to the housing **4110**. Said another way, the distal base retention recesses **4125**A are configured to prevent the base from moving distally when the base is in a first position and the proximal base retention recesses **4125**B are configured to prevent the base from moving distally when the base is in a second position. Similarly stated, the proximal base retention recesses **4125**B and the base connection knobs **4358** cooperatively prevent "kickback" after the medical injector **4000** is actuated.

The base actuator groove **4124** is configured to receive an actuator **4311** of the base. As described in more detail herein, the actuator **4311** of the base is configured to engage the electronic circuit system **4900** when the base **4100** is moved with respect to the housing **4110**. The base rail grooves **4127** are configured to receive the guide members **4312** of the base. The guide members **4312** of the base and the base rail grooves **4127** of the housing **4110** engage each other in a way that allows the guide members **4312** of the base to slide in a proximal and/or distal direction within the base rail grooves **4127** while limiting lateral movement of the guide members **4312**. This arrangement allows the base to move in a proximal and/or distal direction with respect to the housing **4110** but prevents the base from moving in a lateral direction with respect to the housing **4110**.

FIG. **12** shows the medicament delivery mechanism **4500** of the medicament delivery device **4000**. The medicament delivery device **4000** is similar to the auto-injectors described in U.S. Patent Application Publication Number 2007/0149925, entitled "Devices, Systems and Methods for Medicament Delivery," filed Nov. 21, 2006, which is incorporated herein by reference in its entirety. Accordingly, only an overview of the medicament delivery mechanism **4500** and related operation of the medicament delivery device **4000** is included below.

The medicament delivery mechanism **4500** includes a needle **4512**, a carrier **4520**, a movable member **4530**, a medicament container **4560**, a gas container **4570**, and a release member **4540**. As described above, the needle **4512**, carrier **4520**, movable member **4530** and medicament container **4560** are disposed within the medicament cavity **4157** of the housing **4110**. The gas container **4570** and the release member **4540** are disposed within the gas cavity **4154** of the housing **4110**.

The release member **4540** is movably disposed within the distal end portion **4156** of the gas cavity **4154**. A proximal end portion **4542** of the release member **4540** includes a sealing member **4545** and a puncturer **4541**. The sealing member **4545** is configured to engage the sidewall of the housing **4110** defining the gas cavity **4154** such that the proximal end portion **4155** of the gas cavity **4154** is fluidically isolated from the distal end portion **4156** of the gas cavity **4154**. In this manner, when gas is released from the gas container **4570**, the gas contained in the proximal end portion **4155** of the gas cavity **4154** is unable to enter the distal end portion **4156** of the gas cavity **4154**. The puncturer **4541** is configured to contact and puncture a frangible seal **4573** on the gas container **4570** when the release member **4540** moves proximally within the gas cavity **4154**, as shown by the arrow BB in FIG. **12**.

A distal end portion **4544** of the release member **4540** includes extensions **4552**. The extensions **4552** include projections **4547** that include tapered surfaces **4549** and engagement surfaces **4548**. Further, the extensions **4552** define an opening **4554** between the extensions **4552**. The engagement surfaces **4548** of the projections **4547** are configured to extend through the safety lock aperture **4128** of the housing **4110** and contact a distal surface of the housing **4110**. In this manner, the engagement surfaces **4548** of the projections **4547** limit proximal movement of the release member **4540** when the engagement surfaces **4548** are in contact with the distal surface of the housing **4110**. The tapered surfaces **4549** of the projections **4547** are configured to contact protrusions **4313** on a proximal surface **4310** of the base **4300** (see e.g., FIG. **26**). In this manner, proximal movement of the base **4300** causes the extensions **4552** to move together, thereby releasing the engagement surfaces **4548** from the housing **4110** and allowing the release member **4540** to move proximally within the gas cavity **4154**.

The opening **4554** defined by the extensions **4552** is configured to receive the safety lock protrusion **4742** of the safety lock **4700** (see e.g., FIG. **24**). The safety lock protrusion **4742** is configured to ensure that the extensions **4552** remain apart and the engagement surfaces **4548** of the projections **4547** remain in contact with the distal end portion **4120** of the housing **4110**. In some embodiments, for example, the release member **4540** and/or the extensions **4552** can be constructed from any suitable material configured to withstand deformation that may occur when exposed to a load over an extended period of time.

The gas container **4570** is configured to contain a pressurized gas, and has a frangible seal **4573** at the distal end thereof. The frangible seal **4573** is configured to break when the puncturer **4541** of the proximal end portion **4542** of the release member **4540** contacts the frangible seal **4573**. The gas container retention member **4580** of the proximal cap **4112** of the housing **4110** is configured to receive and/or retain the proximal end portion **4576** of the gas container **4570** to maintain the position of the gas container **4570**. The medicament container **4560** of the medicament delivery mechanism **4500** is configured to contain a medicament. A distal end portion **4562** of the medicament container **4560** contains a seal **4523** configured to burst when punctured by a proximal end **4516** of the needle **4512**, as described below. A proximal end portion **4566** of the medicament container **4560** is configured to receive a piston portion **4534** of the movable member **4530**.

The movable member **4530** of the medicament delivery mechanism **4500** is movably disposed within the medicament cavity **4157**. The movable member **4530** includes the piston portion **4534** having a plunger (not shown) at the distal end portion of the piston portion **4534**. The piston portion **4534** is configured to move within the medicament container **4560**. In this manner, the piston portion **4534** of the movable member **4530** can apply or exert pressure to a medicament contained in the medicament container **4560**. The piston portion **4534** can be constructed of a resilient, durable, and/or sealing material, such as a rubber, for example.

The carrier **4520** of the medicament delivery mechanism **4500** includes a distal end portion **4522** and a proximal end portion **4526**. The medicament container **4560** is coupled to the carrier **4520** via a "snap-fit" connection (not shown) such that the medicament container **4560** can move relative to the carrier **4520** between a first configuration and a second configuration during an injection event. In the first configuration, the carrier **4520** is configured to move within the medicament cavity **4157** such that movement of the carrier

4520 within the medicament cavity 4157 causes contemporaneous movement of the medicament container 4560 within the medicament cavity 4157. The proximal end portion 4516 of the needle 4512 is spaced apart from the seal 4523 of the medicament container 4560 when the carrier 4520 is in the first configuration. In the second configuration, the medicament container 4560 releases from the "snap-fit" causing the medicament container 4560 to move distally with respect to the carrier 4520, causing the proximal end portion 4516 of the needle 4512 to pierce the seal 4523. In this manner, the needle 4512 can be selectively placed in fluid communication with the medicament container 4560 to define a medicament delivery path (not shown).

FIGS. 13-20 show the electronic circuit system 4900. The electronic circuit system is configured to produce and/or output an audible output associated with a use of the medicament delivery device 4000. The electronic circuit system 4900 of the medicament delivery device 4000 includes the electronic circuit system cover 4170 shown and described above with reference to FIG. 7, a printed circuit board 4922, a processor 4950, a battery assembly 4962, an audible output device 4956, two light emitting diodes (LEDs) 4958A and 4958B, and a battery clip 4910. As shown in FIG. 22, the electronic circuit system 4900 is configured to fit within the electronic circuit system cavity 4153 of the housing 4110. Accordingly, as described above, the electronic circuit system 4900 is physically, acoustically, and/or fluidically isolated from the medicament cavity 4157 and/or the gas cavity 4154.

The electronic components (e.g., the printed circuit board 4922, the battery assembly 4962, and the like) are mounted to the electronic circuit system cover 4170. The electronic circuit system cover 4170 includes a distal end portion 4180 and a proximal end portion 4190. The proximal end portion 4190 includes connection protrusions 4171A and a battery clip protrusion 4173. The connection protrusions 4171A extend from the proximal end portion 4190 of the electronic circuit system cover 4170, and are configured to be disposed within the connection apertures 4152 of the housing 4110, as described above. In this manner, the electronic circuit system 4900 can be coupled to the housing 4110 within the electronic circuit system cavity 4153. In other embodiments, the electronic circuit system 4900 can be coupled to the housing 4110 by other suitable means such as an adhesive, a clip and/or the like.

The proximal end portion 4190 of the electronic circuit system cover 4170 defines multiple sound apertures 4191. The audible output device 4956 is disposed against the proximal end portion 4190 of the electronic circuit system cover 4170 such that the front portion 4957 of the audible output device 4956 is disposed adjacent the sound apertures 4191. In this manner, sound waves from the audible output device 4956 can travel from the audible output device 4956 to a region outside of the housing 4110 via the sound apertures 4191. As described above, in some embodiments, a sealing material (e.g., a compressible adhesive foam, an elastomeric o-ring, or the like) can be disposed on an outer perimeter of the front portion 4957 of the audible output device 4956 such that when the audible output device 4956 is pressed against the electronic circuit system cover 4170 by the speaker protrusion 4147, a substantially airtight seal is formed between the front portion 4957 of the audible output device 4956 and the electronic circuit system cover 4170. In this manner, sound waves produced by the front portion 4957 of the audible output device 4956 are directed through the multiple sound apertures 4191 and not through a breach or gap between the audible output device 4956 and the electronic circuit system cover 4170. In some embodiments, for example, the sealing material is a compressible adhesive foam approximately ¾millimeters in thickness that covers approximately 10 percent of the front portion 4957 of the audible output device 4956.

As shown in FIGS. 18 and 19, the distal end portion 4180 of the electronic circuit system cover 4170 includes a connection protrusion 4171B, a stiffening protrusion 4174, and defines an LED aperture 4181 and an aperture 4172. The LED aperture 4181 is configured to receive the LEDs 4958A, 4958B such that a user can view the LEDs 4958A, 4958B, which are described in more detail herein. The connection protrusion 4171B extends from the distal end portion 4180 of the electronic circuit system cover 4170, and is configured to attach the electronic circuit system 4900 to the housing 4110, as described above. The stiffening protrusion 4174 is configured to have at least a portion received within and/or accessible via the aperture 4145 in the housing 4110 (see e.g., FIG. 6). The stiffening protrusion 4174 is configured to limit the bending (e.g., buckling) of the electronic circuit system cover 4170 when the electronic circuit system cover 4170 is coupled to the housing 4110.

The electronic circuit system cover 4170 is matingly coupled to the housing 4110 such that the electronic circuit system cover 4170 and the electronic circuit system cavity 4153 collectively define an acoustic enclosure within which the audible output device 4956 is disposed. Said another way, the electronic circuit system cover 4170 and the electronic circuit system cavity 4153 collectively form a region, volume and/or space that is configured to minimize or attenuate noise and/or enhance the audible output of the audible output device 4956. Moreover, the volume associated with the region defined by the electronic circuit system cover 4170 and the electronic circuit system cavity 4153 is larger than the volume of the audible output device 4956 and/or the electronic circuit system 4900 disposed within the region. In this manner, the acoustic enclosure defined by the electronic circuit system cover 4170 and the electronic circuit system cavity 4153 is configured to contain a volume of air behind the audible output device 4956.

The safety lock actuator groove 4182 of the electronic circuit system housing 4170 is configured to be disposed adjacent the safety lock actuator groove 4123 of the distal end portion 4120 of the housing 4110. In this manner, the safety lock actuator groove 4182 of the electronic circuit system housing 4170 and the safety lock actuator groove 4123 of the distal end portion 4120 of the housing 4110 collectively receive the actuator 4744 of the safety lock 4700, which is described in more detail herein. Similarly, the base actuator groove 4183 of the electronic circuit system housing 4170 is configured to be disposed about the base actuator groove 4124 of the distal end portion 4120 of the housing 4110. The base actuator groove 4183 of the electronic circuit system housing 4170 and the base actuator groove 4124 of the distal end portion 4120 of the housing 4110 collectively receive the actuator 4311 of the base, which is described in more detail herein.

Moreover, the audible output device 4956 and the electronic circuit system cavity 4153 are collectively configured to enhance the quality and/or magnitude of the sound produced by the audible output device 4956. For example, in some embodiments, the size and/or shape of the electronic circuit system cavity 4153 can be configured such that the electronic circuit system cavity 4153 defines an acoustic resonant frequency that is within a predefined frequency range of the audible output device 4956. More particularly, in some embodiments, the electronic circuit system cavity

4153 can be configured such that the electronic circuit system cavity 4153 defines an acoustic resonant frequency that is substantially the same as a resonant frequency of the audible output device 4956. In this manner, the quality and/or magnitude of the sound produced by the audible output device 4956 can be enhanced for a particular range of frequencies. In some embodiments, the quality and/or magnitude of the sound produced by the audible output device 4956 can be enhanced for a frequency range corresponding to the frequency range of a recorded speech output.

As shown in FIGS. 14 and 15, the printed circuit board 4922 of the electronic circuit system 4900 includes a substrate 4924, a first actuation portion 4926 and a second actuation portion 4946. The printed circuit board 4922 provides the structure upon which at least a portion of the electronic components of the electronic circuit system 4900 are mounted. Moreover, the printed circuit board 4922 includes conductive portions (e.g., copper traces, insulated wires, flexible wires or the like) to electronically couple the components.

As shown in FIGS. 21A-21C, the first actuation portion 4926 includes a first electrical conductor 4934 and defines an opening 4928 having a boundary 4929. The opening 4928 of the first actuation portion 4926 is configured to receive a protrusion 4746 of the actuator 4744 of the safety lock 4700. The boundary 4929 of the first opening 4928 has a discontinuous shape, such as, for example, a teardrop shape, that includes a stress concentration riser 4927. The discontinuity and/or the stress concentration riser 4927 of the boundary 4929 can be of any suitable shape to cause the substrate 4924 to deform in a predetermined direction when the protrusion 4746 of the actuator 4744 of the safety lock 4700 is moved relative to the opening 4928, as shown by the arrow CC in FIG. 21B.

The opening 4928 is defined adjacent the first electrical conductor 4934 that electronically couples the components included in the electronic circuit system 4900. The first electrical conductor 4934 includes a first switch 4972, which can be, for example a frangible portion of the first electrical conductor 4934. In use, when the safety lock 4700 is moved from a first position (see e.g., FIG. 21A) to a second position (see e.g., FIG. 21B), the actuator 4744 moves in a direction substantially parallel to a plane defined by a surface of the first actuation portion 4926 of the substrate 4924. The movement of the actuator 4744 causes the protrusion 4746 to move within the first opening 4928, as indicated by the arrow CC in FIG. 21B. The movement of the protrusion 4746 tears the first actuation portion 4926 of the substrate 4924, thereby separating the portion of the first electrical conductor 4934 including the first switch 4972. Said another way, when the safety lock 4700 is moved from its first position to its second position (see e.g., FIG. 29), the actuator 4744 moves irreversibly the first switch 4972 from a first state (e.g., a state of electrical continuity) to a second state (e.g., a state of electrical discontinuity). Said yet another way, when the safety lock 4700 is moved from its first position to its second position, the actuator 4744 disrupts the first electrical conductor 4934.

The second actuation portion 4946 includes a second electrical conductor 4935 and defines an opening 4945, having a boundary 4949 and a tear propagation limit aperture 4948. As shown, the opening 4945 of the second actuation portion 4946 is configured to receive a portion of an actuator 4311 of the base. The boundary 4949 of the opening 4945 has a discontinuous shape that includes a stress concentration riser 4947. The discontinuity and/or the stress concentration riser 4947 of the boundary 4949 can be of any suitable shape to cause the substrate 4924 to deform in a predetermined direction when the actuator 4311 of the base is moved in a proximal direction relative to the opening 4945, as shown by the arrow DD in FIG. 21C.

The second electrical conductor 4935 includes a second switch 4973 disposed between the opening 4945 and the tear propagation limit aperture 4948, which can be, for example, a frangible portion of the second electrical conductor 4935. In use, when the base is moved from its first position to its second position (see e.g., FIG. 29), the actuator 4311 moves in a proximal direction, substantially parallel to a plane defined by a surface of the second actuation portion 4946 of the substrate 4924. The proximal movement of the actuator 4311 tears the second actuation portion 4946 of the substrate 4924, thereby separating the portion of the second electrical conductor 4935 including the second switch 4973. Said another way, when the base is moved from its first position to its second position, the actuator 4311 moves irreversibly the second switch 4973 from a first state (e.g., a state of electrical continuity) to a second state (e.g., a state of electrical discontinuity). The tear propagation limit aperture 4948 is configured to limit the propagation of the tear in the substrate 4924 in the proximal direction. Said another way, the tear propagation limit aperture 4948 is configured to ensure that the tear in the substrate 4924 does not extend beyond the tear propagation limit aperture 4948. The tear propagation limit aperture 4948 can be any shape configured to stop the propagation of a tear and/or disruption of the substrate 4924. For example, the tear propagation limit aperture 4948 can be oval shaped. In other embodiments, the proximal boundary of the tear propagation limit aperture 4948 can be reinforced to ensure that the tear in the substrate 4924 does not extend beyond the tear propagation limit aperture 4948.

The processor 4950 is configured to process electronic inputs (e.g., from input switches) and produce electronic signals and/or outputs. As described herein, such electronic signals can include signals related to audio or visual outputs associated with a use of the medicament delivery device 4000. More particularly, the processor 4950 is configured to output an electronic signal to the audible output device 4956, which then converts the electronic signal into sound waves. Said another way, the processor 4950 is configured to output an electronic signal associated with an audible output to the audible output device 4956, which is configured to output the audible output. The electronic signal can be associated with, for example, recorded speech, a single tone, a sequence of tones, and/or the like. In this manner, the electronic circuit system 4900 can produce and/or output an audible output associated with a use of the medicament delivery device 4000.

The electronic signals produced by the processor 4950 are conveyed to the audible output device 4956 via one or more electronic paths (not identified in FIG. 15) defined by the printed circuit board 4922 (e.g., conductive traces or the like). As shown in FIG. 16, the electronic paths between the processor 4950 and the audible output device 4956 are devoid of an amplifier. Similarly stated, no amplifiers and/or drivers external to the processor 4956 are used to amplify or increase the electronic signals produced by the processor 4950. This arrangement can reduce the cost and/or complexity of the electronic circuit system 4900. Moreover, by being devoid of external amplification, the power of the electronic signals conveyed to the audible output device 4956 can be relatively low. In this manner, the life of the battery assembly 4962 can be extended, the battery assembly 4962 can include smaller batteries and/or the battery

assembly **4962** can include fewer batteries. In some embodiments, for example, the electronic signal produced by the processor **4950** can have a power of less than 500 milliwatts (mW). In other embodiments, the electronic signal produced by the processor **4950** can have a power of less than 100 milliwatts (mW). In yet other embodiments, the electronic signal produced by the processor **4950** can have a power of approximately 80 milliwatts (mW).

The processor **4950** can be a commercially-available processing device dedicated to performing one or more specific tasks. For example, in some embodiments, the processor **4950** can be a commercially-available microprocessor, such as the Sonix SNC 12060 voice synthesizer. Alternatively, the processor **4950** can be an application-specific integrated circuit (ASIC) or a combination of ASICs, which are designed to perform one or more specific functions. In yet other embodiments, the processor **4950** can be an analog or digital circuit, or a combination of multiple circuits. In some embodiments, the processor **4950** can be programmed through, for example, an internal controller (not shown) such that varied applications, including voice section combination, key trigger arrangement, and/or output control, for example, can be implemented.

The processor **4950** can include a memory device (not shown) configured to receive and store information, such as a series of instructions, processor-readable code, a digitized signal, or the like. For example, the memory device can store operating code, recorded speech or voice code, and/or data code. The memory device can include one or more types of memory. For example, the memory device can include a read only memory (ROM) component and a random access memory (RAM) component. The memory device can also include other types of memory suitable for storing data in a form retrievable by the processor **4950**, for example, electronically-programmable read only memory (EPROM), erasable electronically-programmable read only memory (EEPROM), or flash memory. In some embodiments, a memory device separate from the processor **4950** can be used to receive and store information.

The battery assembly **4962** of the electronic circuit system **4900** includes two batteries stacked on top of one another. The batteries can be, for example, three volt, "watch-style" lithium batteries. The battery assembly **4962** has a first surface **4964** and a second surface **4966**. The first surface **4964** of the battery assembly **4962** can contact an electrical contact (not shown) disposed on the substrate **4924**. The second surface **4966** of the battery assembly **4962** is configured to contact a contact portion **4918** of a distal end portion **4916** of a battery clip **4910**. When both the electrical contact of the substrate **4924** and the contact portion **4918** of the distal end portion **4916** of the battery clip **4910** contact the battery assembly **4962**, the batteries of the battery assembly **4962** are placed in electrical communication with the electronic circuit system **4900**. Said another way, when the electrical contact of the substrate **4924** and the contact portion **4918** of the distal end portion **4916** of the battery clip **4910** contact the battery assembly **4962**, the battery assembly **4962** is configured to supply power to the electronic circuit system **4900**.

The battery clip **4910** (shown in FIG. **20**) includes a proximal end portion **4912** and a distal end portion **4916**. The proximal end portion **4912** defines a retention aperture **4913**. The retention aperture **4913** is configured to receive the battery clip protrusion **4173** of the electronic circuit system cover **4170**. In this manner, the battery clip protrusion **4173** maintains the position of the battery clip **4910** with respect to the electronic circuit system cover **4170** and/or the battery assembly **4962**.

The distal end portion **4916** of the battery clip **4910** includes a contact portion **4918** and an angled portion **4917**. As described above, the contact portion **4918** is configured to contact the second surface **4916** of the battery assembly **4962** to place the battery assembly **4962** in electrical communication with the electronic circuit system **4900**. The angled portion **4917** of the distal end portion **4916** of the battery clip **4910** is configured to allow a proximal end portion **4236** of a battery isolation protrusion **4235** (see e.g., FIG. **23**) to be disposed between the second surface **4966** of the battery assembly **4962** and the contact portion **4918** of the distal end portion **4916** of the battery clip **4910**. When the battery isolation protrusion **4235** is disposed between the second surface **4966** of the battery assembly **4962** and the contact portion **4918** of the distal end portion **4916** of the battery clip **4910**, the electrical path between the battery assembly **4962** and the remainder of the electrical circuit system **4900** is severed, thereby removing power from the electronic circuit system **4900**. The contact portion **4918** of the distal end portion **4916** of the battery clip **4910** is biased such that when the battery isolation protrusion **4235** is removed, the contact portion **4918** will move into contact the second surface **4916** of the battery assembly **4962**, thereby restoring electrical communication between the battery assembly **4962** and the electronic circuit system **4900**. In some embodiments, the battery isolation protrusion **4235** can be repeatedly removed from between the second surface **4966** of the battery assembly **4962** and the contact portion **4918** of the distal end portion **4916** of the battery clip **4910** and reinserted. Said another way, the battery isolation protrusion **4235** and the battery clip **4910** collectively form a reversible on/off switch.

When the battery isolation protrusion **4235** is disposed between the second surface **4966** of the battery assembly **4962** and the contact portion **4918** of the distal end portion **4916** of the battery clip **4910**, a portion of the battery isolation protrusion **4235** is also disposed within the battery isolation protrusion aperture **4121**. Conversely, when the battery isolation protrusion **4235** is removed from between the second surface **4966** of the battery assembly **4962** and the contact portion **4918** of the distal end portion **4916** of the battery clip **4910** the battery isolation protrusion aperture **4121** is opened. In this manner, the battery isolation protrusion **4235** can selectively open and/or close the battery isolation protrusion aperture **4121**. In this regard, the battery isolation protrusion aperture **4121** can selectively function as a port to allow sound waves produced by the audible output device **4956** to exit the electronic circuit system cavity **4153** to an area outside the housing **4110**. As described herein, in some embodiments, the location of the battery isolation protrusion aperture **4121** with respect to the location of the audible output device **4956** and/or the sound apertures **4191** is such that the sound waves that exit through the multiple sound apertures **4191** are substantially in phase with the sound waves that exit through the battery isolation protrusion aperture **4121**.

The audible output device **4956** of the electronic circuit system **4900** is configured to output audible sound associated with a use of the medicament delivery device **4000**. The audible output device **4956** can have any suitable performance characteristics to produce the desired audible output (e.g., an audible output having a predefined frequency range, a predefined sound pressure level, etc.) based on the electronic signals produced by the processor **4950**, as described above. For example, the audible output device **4956** can

have a specified resonance frequency, a specified output sound pressure level (e.g., Watts/meter), a specified maximum input power rating, and/or a specified frequency response range. The audible output device **4956** can have one or more resonant frequencies within the specified frequency response range. In some embodiments, the audible output device **4956** can be a commercially-available micro-speaker such as an M0015N07K01F micro-speaker manufactured by Dain (International) Co., Ltd. In other embodiments, the audible output device **4956** can be an RS-1511A micro-speaker manufactured by Regal Electronics, Inc., for example.

As shown in FIGS. **13** and **14**, the audible output device **4956** includes a front portion **4957** and a back portion **4955**. The audible output device **4956** can include a movable portion (e.g., a cone, membrane, diaphragm, or the like; not shown in FIGS. **13** and **14**) such that the audible output device **4956** can produce a first set of sound waves from the front portion **4957** and a second set of sound waves from the back portion **4955**. The sound waves produced by the front portion **4957** and the sound waves produced by the back portion **4955** collectively define the audible output of the audible output device **4956**. More particularly, the audible output of the audible output device **4956** is characterized by the sound waves produced by the front portion **4957** and the sound waves produced by the back portion **4955** as they exit the electronic circuit system cavity **4153** through the sound apertures **4191** and the battery isolation protrusion aperture **4121**, respectively.

As described above, the audible output device **4956** and the electronic circuit system cavity **4153** are collectively configured to enhance the quality and/or magnitude of the sound produced by the audible output device **4956**. Similarly stated, the size, shape and/or number and location of openings (e.g., the sound apertures **4191** and the battery isolation protrusion aperture **4121**) of the electronic circuit system cavity **4153** are configured to enhance the quality of the audible output produced by the audible output device **4956** having predefined performance characteristics. In some embodiments, for example, the electronic circuit system cavity **4153** and the electronic circuit system cover **4170** are configured such that the sound waves produced by the front portion **4957** as they exit through the sound apertures **4191** are substantially in phase with the sound waves produced by the back portion **4955** as they exit through the battery isolation protrusion aperture **4121**. This can be accomplished, for example, by spacing the sound apertures **4191** apart from the battery isolation protrusion aperture **4121** by a predetermined distance. In this manner, the distance through which the sound waves produced by the front portion **4957** travel to exit through the sound apertures **4191** and the distance through which the sound waves produced by the back portion **4955** travel to exit through the battery isolation protrusion aperture **4121** can be set to predetermined values such that the sound waves produced by the front portion **4957** are substantially in phase with the sound waves produced by the back portion **4955** as they exit the sound apertures **4191** and the battery isolation protrusion aperture **4121**, respectively. For example, in some embodiments, the sound apertures **4191** can be spaced apart from the battery isolation protrusion aperture **4121** by approximately 2.5 inches to 3 inches. In other embodiments, the sound apertures **4191** can be spaced apart from the battery isolation protrusion aperture **4121** by approximately 1 inch to 3 inches.

In some embodiments, the audible output device **4956** and the electronic circuit system cavity **4153** can be collectively "tuned" to enhance the quality of an audible output having a specific frequency range. For example, in some embodiments, the audible output device **4956** and the electronic circuit system cavity **4153** can be collectively "tuned" to enhance the quality of a recorded speech output. As described above, in some embodiments, the size and/or shape of the electronic circuit system cavity **4153** can be configured such that the electronic circuit system cavity **4153** defines an acoustic resonant frequency that is within a frequency range of the audible output device **4956** and/or a frequency range of a recorded speech output. In some embodiments, for example, the electronic circuit system cavity **4153** can define at least one acoustic resonant frequency of between about 100 hertz and about 1000 hertz. In other embodiments, the electronic circuit system cavity **4153** can define at least one acoustic resonant frequency of between about 100 hertz and about 3000 hertz.

By enhancing the audible output produced by the audible output device **4956** as described above, the medicament delivery device **4000** can produce audible outputs associated with recorded speech having sufficient volume (e.g., sound pressure level) and without external amplification. In this manner, the power required to produce such audible outputs can be minimized. For example, in some embodiments, the processor **4950** can be configured to output an electronic output to the audible output device **4956** such that the audible output device **4956** outputs an audible output having a sound pressure level in a range between about 61 decibels (dB) and about 65 dB. In another embodiment, the audible output can have a sound pressure level in a range between about 61 decibels (dB) and about 65 dB at a distance of about 6 inches from the audible output device **4956**. In yet other embodiments, the audible output can have a sound pressure level in a range between about 61 decibels (dB) and about 65 dB within a distance of about 20 feet from the audible output device **4956**.

In other embodiments, the processor **4950** can be configured to output an electronic output to the audible output device **4956** such that the audible output device **4956** outputs an audible output that has a sound pressure level greater than about 61 dB. In yet other embodiments, the audible output can have a sound pressure level greater than about 61 dB at a distance of about 6 inches from the audible output device **4956**. In yet other embodiments, the audible output can have a sound pressure level greater than about 61 dB within a distance of about 20 feet from the audible output device **4956**.

In some embodiments, the processor **4950** can output an electronic output having a power of less than 100 milliwatts (mW) to the audible output device **4956**, and the audible output device **4956** can output an audible output that has a sound pressure level greater than about 61 dB. In yet another embodiment, the electronic output can have a power of less than 100 mW and the audible output can have a sound pressure level greater than about 61 dB at a distance of about 6 inches from the audible output device **4956**. In yet another embodiment, the electronic output can have a power of less than 100 mW and the audible output can have a sound pressure level greater than about 61 dB within a distance of about 20 feet from the audible output device **4956**.

In other embodiments, the medicament delivery device (or medical injector) **4000** can have a network interface device (not shown) configured to operatively connect the electronic circuit system **4900** to a remote device (not shown) and/or a communications network (not shown). In this manner, the electronic circuit system **4900** can send information to and/or receive information from the remote

device. The remote device can be, for example, a remote communications network, a computer, a compliance monitoring device, a cell phone, a personal digital assistant (PDA) or the like. Such an arrangement can be used, for example, to download replacement processor-readable code from a central network to the electronic circuit system **4900**. In some embodiments, for example, the electronic circuit system **4900** can download information associated with the medicament delivery device **4000**, such as an expiration date, a recall notice, updated use instructions or the like. Similarly, in some embodiments, the electronic circuit system **4900** can upload compliance information associated with the use of the medicament delivery device **4000** via the network interface device.

FIGS. **22** and **23** show the cover **4200** of the medicament delivery device **4000**. The cover **4200** includes a proximal end portion **4210** and a distal end portion **4230**, and defines a cavity **4242**. The cavity **4242** of the cover **4200** is configured to receive at least a portion of the housing **4110**. The proximal end portion **4210** defines apertures **4215** configured to receive the cover retention protrusions **4142** of the housing **4110** (shown in FIGS. **4**B and **6**). In this manner, the apertures **4215** and the cover retention protrusions **4142** of the housing **4110** removably retain the cover **4200** about at least a portion of the housing **4110**. Said another way, the apertures **4215** and the cover retention protrusions **4142** of the housing **4110** are configured such that the cover **4200** can be removed from a portion of the housing **4110** and then replaced about the portion of the housing **4110**.

The distal end portion **4230** of the cover **4200** includes a battery isolation protrusion **4235**. The battery isolation protrusion **4235** includes a proximal end portion **4236** and a tapered portion **4237**. The proximal end portion **4236** of the battery isolation protrusion **4235** is configured to be removably disposed between the second surface **4966** of the battery assembly **4962** and the contact portion **4918** of the distal end portion **4916** of the battery clip **4910**, as described above. When the battery isolation protrusion **4235** is removed, the opening or port associated with the battery isolation protrusion aperture **4121** is opened such that sound waves produced by the audible output device **4956** within the electronic circuit system cavity **4153** can exit the electronic circuit system cavity **4153** to an area outside the housing **4110**.

FIGS. **22-23** show the safety lock **4700** of the medicament delivery device **4000**. The safety lock **4700** of the medicament delivery device **4000** includes a proximal surface **4740**, a distal surface **4760** opposite the proximal surface **4740** and a needle sheath **4720**. The safety lock **4700** defines a needle sheath aperture **4770** and a battery isolation protrusion aperture **4775**. The battery isolation protrusion aperture **4775** is configured to receive the battery isolation protrusion **4235** of the cover **4200** such that the battery isolation protrusion **4235** can be disposed within the electronic circuit system cavity **4153** or the electronic circuit system **4900**, as described above. Similarly stated, the battery isolation protrusion aperture **4775** of the safety lock **4700** is aligned with the battery isolation protrusion aperture **4121** of the housing **4110**, such that the battery isolation protrusion **4235** can be disposed within the electronic circuit system cavity **4153** when the cover **4200** is disposed about a portion of the housing **4110**. The battery isolation protrusion aperture **4775** is aligned with the battery isolation protrusion aperture **4121** such that sound waves produced by the audible output device **4956** within the electronic circuit system cavity **4153** that exit through the battery isolation protrusion aperture **4121** can travel through the battery isolation protrusion aperture **4775**.

The proximal surface **4740** of the safety lock **4700** includes a safety lock protrusion **4742**, a stopper **4743**, an actuator **4744** and two opposing pull tabs **4741**. As described above, when the safety lock **4700** is in a first (locked) position, the safety lock protrusion **4742** is configured to be disposed in the opening **4554** defined by the extensions **4552** of the distal end portion **4544** of the release member **4540**. Accordingly, the safety lock protrusion **4742** is configured to prevent the extensions **4552** from moving closer to each other, thereby preventing proximal movement of the release member **4540** of the medicament delivery mechanism **4500** and/or delivery of a medicament. The stopper **4743** of the safety lock **4700** is a protrusion extending from the proximal surface **4740** of the safety lock **4700**. The stopper **4743** is configured to contact a portion of the housing **4110** to limit the proximal movement of the safety lock **4700** relative to the housing **4110**. In other embodiments, the stopper **4743** can be any structure configured to limit the proximal movement of the safety lock **4700**.

The actuator **4744** of the safety lock **4700** has an elongated portion **4745** and a protrusion **4746**. The elongated portion **4745** extends in a proximal direction from the proximal surface **4740**. In this manner, the elongated portion **4745** can extend through a safety lock actuator opening **4356** of the base **4300** (see e.g., FIG. **26**). The protrusion **4746** extends in a direction substantially transverse to the elongated portion **4745** and/or substantially parallel to the proximal surface **4740** of the safety lock **4700**. The pull tabs **4741** of the safety lock **4700** include a grip portion **4747** and indicia **4748**. The grip portion **4747** of the pull tabs **4741** provides an area for the user to grip and/or remove the safety lock **4700** from the rest of the medicament delivery device **4000**. The indicia **4748** provide instruction on how to remove the safety lock **4700**.

As shown in FIG. **25**, the needle sheath **4720** of the safety lock **4700** includes a distal end portion **4724**, a proximal end portion **4722** and a plurality of ribs **4728**. The needle sheath **4720** can also define a lumen **4729** configured to receive the needle **4512**. In this manner, the needle sheath **4720** can protect the user from the needle **4512** and/or can keep the needle **4512** sterile before the user uses the medicament delivery device **4000**. The distal end portion **4724** of the needle sheath **4720** has an angled ridge **4725**. The angled ridge **4725** is configured to allow the proximal end portion **4722** of the needle sheath **4720** to irreversibly move through the needle sheath aperture **4770** of the safety lock **4700** in a distal direction. The needle sheath aperture **4770** has retaining tabs **4771** configured to prevent the proximal movement of the needle sheath with respect to the safety lock **4700**. As shown in FIG. **28**, the needle sheath **4720** is removed from the needle **4512** when the safety lock **4700** is moved in a distal direction with respect to the housing **4110**.

FIGS. **24**A and **24**B show the base **4300** of the medicament delivery device **4000**. The base **4300** includes a proximal surface **4310**, a distal surface **4330** and base connection knobs **4358**. The base **4300** defines a needle aperture **4350**, a safety lock protrusion aperture **4352**, a battery isolation protrusion aperture **4354**, a safety lock actuator opening **4356**, and pull tab openings **4360**. The needle aperture **4350** is configured to receive the needle **4512** when the medical injector **4000** is actuated. The safety lock protrusion aperture **4352** of the base **4300** receives the safety lock protrusion **4742** of the safety lock **4700**. The battery isolation protrusion aperture **4354** of the base **4300** receives the battery isolation protrusion **4235** of the cover

4200 and the stopper 4743 of the safety lock 4700. The safety lock actuator opening 4356 receives the safety lock actuator 4744 of the safety lock 4700. The pull tab openings 4360 are configured to receive the pull tabs 4741 of the safety lock 4700.

The battery isolation protrusion aperture 4354 is aligned with the battery isolation protrusion aperture 4121 such that sound waves produced by the audible output device 4956 within the electronic circuit system cavity 4153 that exit through the battery isolation protrusion aperture 4121 can travel through the battery isolation protrusion aperture 4354.

The proximal surface 4310 of the base 4300 includes an actuator 4311, and protrusions 4313. The actuator 4311 is an elongate member configured to engage the substrate 4924 of the electronic circuit system 4900. The protrusions 4313 of the base 4300 are configured to engage the tapered surfaces 4549 of the extensions 4552 of the release member 4540. As described in further detail herein, when the safety lock 4700 is removed and the base 4300 is moved in a proximal direction with respect to the housing 4110, the protrusion 4313 of the base 4300 are configured to move the extensions 4552 of the release member 4540 closer to each other, actuating the medicament delivery mechanism 4500. As described above, the base connection knobs 4358 are configured to engage the base retention recesses 4125A, 4125B in a way that allows proximal movement of the base 4300 but limits distal movement of the base 4300.

As shown in FIG. 27, the medicament delivery device 4000 is first enabled by moving the medicament delivery device 4000 from a first configuration to a second configuration by moving the cover 4200 from a first position to a second position. The cover 4200 is moved from the first position to the second position by moving it with respect to the housing 4110 in the direction shown by the arrow CC in FIG. 27. When the cover 4200 is moved with respect to the housing 4110 in the direction CC, the battery isolation protrusion 4235 is removed from the area between the battery clip 4910 and the second surface 4966 of the battery assembly 4962. In this manner, the battery assembly 4962 can be operatively coupled to the electronic circuit system 4900 when the cover 4200 is removed, thereby providing power to the electronic circuit system 4900.

When power is provided, as described above, the electronic circuit system 4900 can output one or more predetermined electronic outputs and/or audible outputs. For example, in some embodiments, the electronic circuit system 4900 can output an electronic signal associated with recorded speech to the audible output device 4956 such that the audible output device 4956 outputs an audible output. Such an electronic signal can be, for example, associated with a .WAV file that contains a recorded instruction instructing (e.g., prompting) the user in the operation of the medicament delivery device 4000. Such an instruction can state, for example, "remove the safety tab near the base of the auto-injector." The electronic circuit system 4900 can simultaneously output an electronic signal to one and/or both of the LEDs 4958A, 4958B thereby causing one and/or both of the LEDs 4958A, 4958B to flash a particular color. In this manner, the electronic circuit system 4900 can provide both audible and visual instructions to assist the user in the initial operation of the medical injector 4000. Further, because the battery isolation protrusion 4235 has been removed from the battery isolation protrusion aperture 4121, an audible output by the audible output device 4956 can include sound waves produced within the electronic circuit system cavity 4153 that exit through the battery isolation protrusion aperture 4121.

In other embodiments, the electronic circuit system 4900 can output an electronic output and/or an audible output associated with a description and/or status of the medicament delivery device 4000 and/or the medicament contained therein. For example, in some embodiments, the electronic circuit system 4900 can output an audible message indicating the type of medicament contained in the medicament delivery device 4000, the expiration date of the medicament, the dosage of the medicament or the like. Such an audible message can state, for example, "You have removed an auto-injector containing DOSE mg of Epinephrine. The expiration date of this device is EXPIRATION DATE. If the current date is later than EXPIRATION DATE, please select another auto-injector." In other embodiments, for example, the audible message can be a message providing the user with use instructions or other information that is uniquely associated with the medicament delivery device 4000. For example, such a message can prompt a user to call a phone number unique to the manufacturer of the medicament delivery device 4000 for assistance before, during or after the use of the medicament delivery device 4000. In yet other embodiments, an electronic circuit system can automatically call such a phone number when the medicament delivery device 4000 is removed from its container.

As described above, the medicament delivery device 4000 can be repeatedly moved between the first configuration and the second configuration when the cover 4200 is moved repeatedly between the first position and the second position respectively. Said another way, the cover 4200 can be removed and replaced about the housing 4110 any number of times. When the cover 4200 is moved from the second position to the first position, the battery isolation protrusion 4235 is inserted between the battery clip 4910 and the second surface 4966 of the battery assembly 4962, deactivating the electronic circuit system 4900 and closing the acoustic port associated with the battery isolation protrusion aperture 4121. When the cover is moved from the first position to the second position a second time, the electronic circuit system 4900 is once again activated and the acoustic port is opened. In this manner, the cover 4200 can be removed and the electronic circuit system 4900 can output an electronic output without compromising the sterility of the needle 4512.

After the cover 4200 is removed from the housing 4110, the medicament delivery device 4000 can be moved from the second configuration to a third configuration by moving the safety lock 4700 from a first position to a second position. The safety lock 4700 is moved from a first position to a second position by moving the safety lock 4700 with respect to the housing 4110 in the direction shown by the arrow DD in FIG. 28. When the safety lock 4700 is moved from the first position to the second position, the safety lock protrusion 4742 is removed from between the extensions 4552 of the release member 4540, thereby enabling the medicament delivery mechanism 4500. When the actuator 4744 of the safety lock 4700 moves irreversibly the first switch 4972 of the electronic circuit system 4900 to the second state, the electronic circuit system 4900 can output one or more predetermined electronic outputs and/or audible outputs. For example, in some embodiments, a processor (not shown) can output an electronic signal associated with recorded speech to the audible output device 4956. Such an electronic signal can be, for example, associated with a recorded message notifying the user of the status of the medicament delivery device 4000. Such a status message can state, for example, "The medical injector is now enabled." The electronic circuit system 4900 can also simul-

taneously output an electronic signal to one and/or both of the LEDs **4958**A, **4958**B, thereby causing one and/or both of the LEDs **4958**A, **4958**B to stop flashing, change color, produce a particular lighting sequence, or the like.

In some embodiments, the first actuation portion **4926** and the actuator **4744** can be configured such that the actuator **4744** must move a predetermined distance before the actuator **4744** engages the boundary **4929** of the opening **4928**. For example, in some embodiments, the actuator **4744** must move approximately 0.200 inches before the actuator **4744** engages the boundary **4929** of the opening **4928**. In this manner, the safety lock **4700** can be moved slightly without irreversibly moving the first switch **4972** of the electronic circuit system **4900** to the second state. Accordingly, this arrangement will permit the user to inadvertently and/or accidentally move the safety lock **4700** without actuating the electronic circuit system **4900**.

Although the switches (e.g., the first switch **4972** and the second switch **4973**) are shown and described as being monolithically formed from an electrical conductor (see, e.g., FIG. **15**), in other embodiments, a switch can be formed separately from the electrical conductors. For example, in some embodiments, an electrical circuit system can include a series of first electrical conductors having a first set of characteristics (e.g., the width, height, material from which the conductor is fabricated or the like) and a switch constructed from a second electrical conductor having a second set of characteristics different than the first set of characteristics. In other embodiments, a switch can be a separate component, such as, for example, a microswitch, that is mounted to the printed circuit board. In yet other embodiments, an electrical circuit system can include a "pop-out" switch that includes a biasing member to bias the switch in a predetermined state. In yet other embodiments, an electrical circuit system can include a switch that is disposed at a location other than on a printed circuit board.

Similarly, although the switches (e.g., the first switch **4972** and the second switch **4973**) are shown and described as being irreversibly movable from a first state to a second state, in other embodiments, a switch can be reversibly movable between a first state and a second state. Moreover, in yet other embodiments, a switch can have more than two distinct states.

In some embodiments, the electronic circuit system **4900** can be configured to output the status message for a predetermined time period, such as, for example, five seconds. After the predetermined time period has elapsed, the electronic circuit system **4900** can output an audible message further instructing the user in the operation of the medicament delivery device **4000**. Such an instruction can state, for example, "Place the base of the auto-injector against the patient's thigh. To complete the injection, press the base firmly against the patient's thigh." In some embodiments, the electronic circuit system **4900** can simultaneously output an electronic signal to one and/or both of the LEDs **4958**A, **4958**B, thereby causing one and/or both of the LEDs **4958**A, **4958**B to flash a particular color and/or produce a particular lighting sequence. In this manner, the electronic circuit system **4900** can provide both audible and/or visual instructions to assist the user in the placement and actuation of the medicament delivery device **4000**. In some embodiments, the electronic circuit system **4900** can be configured to repeat the instructions after a predetermined time period has elapsed.

As described above, in other embodiments, the medical injector **4000** can have a network interface device (not shown) configured to operatively connect the electronic circuit system **4900** to a remote device (not shown) and/or a communications network (not shown). In this manner, the electronic circuit system **4900** can send a wireless signal notifying a remote device that the safety lock **4700** of the medical injector **4000** has been removed and that the medical injector **4000** has been armed.

After the safety lock **4700** is moved from the first position to the second position, the medicament delivery device **4000** can be moved from the third configuration to a fourth configuration by moving the base **4300** from a first position to a second position. The base **4300** is moved from its first position to its second position by placing the medicament delivery device **4000** against the body of the patient and moving the base **4300** with respect to the housing **4110** in the direction shown by the arrow EE in FIG. **29**. Moving the base **4300** from the first position to the second position causes the protrusions **4313** on the proximal surface **4310** of the base **4300** to engage the tapered surfaces **4549** of the extensions **4552** of the release member **4540**, causing the release member **4540** to actuate the medicament delivery mechanism **4500** and deliver a medicament to a body of a patient.

When the base **4300** is moved from the first position to the second position, the medicament delivery mechanism **4500** is actuated such that the puncturer **4541** of the release member **4540** is brought in contact with and/or punctures the frangible seal **4573** of the gas container **4570**. In some embodiments, the movement of the release member **4540** can be caused by a spring (not shown in FIG. **12**). After the frangible seal **4573** has been punctured, an actuating portion of a compressed gas can escape from the gas container **4570** and flow via the gas passageway **4144** into the medicament cavity **4157**. The gas applies gas pressure to the movable member **4530** causing the movable member **4530** and the carrier **4520** to move in a distal direction within the medicament cavity **4157**. When the carrier **4520** moves distally within the medicament cavity **4157**, the carrier **4520** and the medicament container **4560** are in a first configuration. Accordingly, as described above, the medicament container **4560** is connected to the carrier **4520** by a "snap fit" connection. In this manner, the medicament container **4560** and the needle **4512** contemporaneously move with movable member **4530** and/or the carrier **4520** in a distal direction. As described above, the proximal end portion **4516** of the needle **4512** is connected to the distal end portion **4522** of the carrier **4520** and is spaced from the seal **4523** of the medicament container **4560** when the carrier **4520** is in its first configuration. Said another way, the medicament container **4560** and the needle **4512** do not define a medicament delivery path when the carrier **4520** is in the first configuration. The movement of the needle **4512** in a distal direction causes a distal end portion **4514** of the needle **4512** to exit the housing **4110** and enter the body of a patient prior to administering a medicament.

After the carrier **4520** and/or the needle **4512** have moved within the medicament cavity **4157** a predetermined distance, the carrier **4520** and the medicament container **4560** are moved from the first configuration to a second configuration. In the second configuration of the carrier **4520**, the medicament container **4560** is released from the "snap-fit" allowing the medicament container **4560** and the movable member **4530** to continue to move in a distal direction relative to the carrier **4520**. Said another way, the medicament container **4560** is configured to slidably move within the carrier **4520** when the carrier is moved from the first configuration to the second configuration. As the medicament container **4560** continues to move within the carrier

4520, the proximal end portion 4516 of the needle 4512 contacts and punctures the seal 4523 of the medicament container 4560. This allows the medicament contained in the medicament container 4560 to flow into the lumen (not shown) defined by the needle 4512, thereby defining a medicament delivery path.

As the medicament container 4560 contacts the distal end of the carrier 4520, the medicament container 4560 stops moving within the carrier 4520 while the movable member 4530 continues to move in a distal direction. This causes the piston portion 4534 of the movable member 4530 to sealingly slide and/or move within the medicament container 4560 containing a liquid medicament. As the piston portion 4534 of the movable member 4530 sealingly slides and/or moves within the medicament container 4560, the piston portion 4534 generates a pressure upon the medicament contained within the medicament container 4560, thereby allowing at least a portion of the medicament to flow out of the medicament container 4560 and into the lumen defined by the needle 4512. The medicament is delivered to a body of a user via the medicament delivery path defined by the medicament container 4560 and the needle 4512.

As described above, the actuator 4311 of the base 4300 actuates the electronic circuit 4900 to trigger a predetermined output or sequence of outputs when the base 4520 is moved from its first position to its second position (see, e.g., FIG. 21). When the actuator 4311 is moved in a proximal direction, the electronic circuit system 4900 is actuated to output one or more predetermined electronic outputs and/or audible outputs. For example, in some embodiments, the electronic circuit system 4900 can output an electronic signal associated with recorded speech to the audible output device 4956. Such an electronic signal can be, for example, associated with an audible countdown timer, instructing the user on the duration of the injection procedure. Said another way, if it takes, for example, ten seconds to complete an injection, an audible countdown timer can count from ten to zero ensuring that the user maintains the medicament delivery device 4000 in place for the full ten seconds. In other embodiments, the electronic signal can be, for example, associated with a recorded message notifying the user that the injection is complete, instructing the user on post-injection disposal and safety procedures, instructing the user on post-injection medical treatment or the like. Such a status message can state, for example, "The injection is now complete. Please seek further medical attention from a doctor." The electronic circuit system 4900 can also simultaneously output an electronic signal to one and/or both LEDs 4958A, 4958B, thereby causing one and/or both LEDs 4958A, 4958B to stop flashing, change color, produce a particular lighting sequence, or the like, to provide a visual indication that the injection is complete. In other embodiments, the electronic circuit system 4900 can send a wireless signal notifying a remote device that the injection is complete. In this manner, a patient's compliance can be monitored.

Although the housing 4110 is shown and described above as defining the electronic circuit system cavity 4153, in other embodiments, the housing 4110 need not define the electronic circuit system cavity 4153. For example, in some embodiments, the electronic circuit system assembly can include a housing that defines a cavity and/or an acoustic enclosure within which a speaker is disposed. For example, FIGS. 30-32 are schematic illustrations of medicament delivery device 5000 and an electronic circuit system assembly 5900 according to an embodiment. The medicament delivery device 5000 can be any suitable device for delivering a medicament into a body of a patient. For example, the medicament delivery device 5000 can be an inhaler, a medical injector (e.g., a syringe, pen injector, auto-injector, or the like), a transdermal medicament delivery system or the like. The medicament delivery device 5000 includes a housing 5110 containing a medicament container (not shown in FIGS. 30-32) and/or a medicament delivery mechanism (not shown in FIG. 30-32) for delivering the medicament into the body.

As shown in FIGS. 30 and 31, the electronic circuit system assembly 5900 is configured to be coupled to the housing 5110 of the medicament delivery device 5000. In some embodiments, for example, the electronic circuit system assembly 5900 can be configured to be coupled to a particular medicament delivery device as a kit (e.g., a retrofit kit). In other embodiments, the electronic circuit system assembly 5900 can be configured to be coupled to multiple different medicament delivery devices. Similarly stated, in some embodiments, the electronic circuit system assembly 5900 can be a part of a "universal" retrofit kit. As described above, the electronic circuit system 5900 is configured to produce and/or output an audible output associated with a use of the medicament delivery device 5000.

The electronic circuit system assembly 5900 includes at least a housing 5170, a printed circuit board 5922, and a speaker 5956. The printed circuit board 5922 includes electronic components (e.g., a processor, a battery assembly, or the like; not shown in FIGS. 30-32) operatively coupled to produce and/or output an audible output. The printed circuit board 5922, the speaker 5956 and the associated electronic components can be similar to those included in the electronic circuit system 4900 shown and described above.

The housing 5170 of the electronic circuit system assembly 5900 includes a side wall 5159 that defines a cavity 5158, an end opening 5174 and multiple sound apertures 5191. As shown in FIG. 32 the printed circuit board 5922 and the speaker 5956 are coupled to the housing 5170 of the electronic circuit system assembly 5900 within the cavity 5158. In particular, the speaker 5956 is disposed against the side wall 5159 such that a first side (e.g., a front side) of the speaker 5956 is disposed adjacent the sound apertures 5191. In this manner, sound waves from the first side of speaker 5956 can travel from the speaker 5956 to a region outside of the housing 5170 of the electronic circuit system assembly 5900 via the sound apertures 5191.

The housing 5170 of the electronic circuit system assembly 5900 is coupled to the housing 5110 of the medicament delivery device 5000, as shown by the arrow FF in FIG. 30. The housing 5170 can be coupled to the housing 5110 by any suitable mechanism (e.g., by mating protrusions and recesses, by heat staking, using an adhesive bond, or the like). As shown in FIG. 32, the housing 5110 of the medicament delivery device 5000 and the cavity 5158 of the housing 5170 of the electronic circuit system assembly 5900 collectively define an acoustic enclosure within which the speaker 5956 is disposed. Said another way, a surface 5148 of the housing 5110 and the side wall 5159 collectively define the boundary of a region, volume and/or space that is configured to minimize or attenuate noise and/or enhance the audible output of the speaker 5956, in a manner as described above. Moreover, the opening 5174 can function as a port to allow sound waves produced by a second side (e.g., a back side) of the speaker 5956 to exit the cavity 5158 of the housing 5170 to an area outside the housing 5170. As described above, the opening 5174 can be spaced a prede-

termined distance from the speaker **5956** to enhance the quality of the audible output produced by the speaker **5956**.

Because the electronic circuit system **5900** includes the electronic components (e.g., a processor configured to produce an electronic signal, the speaker **5956** and the like) and defines the cavity **5158**, the electronic components and the cavity **5158** can be complimentarily selected and/or configured to enhance the quality of the audible output produced by the speaker **5956**. Similarly stated, this arrangement allows the sound performance of the electronic circuit system **5900** to be optimized substantially independent of the housing **5110** of the medicament delivery device **5900**.

Although the acoustic enclosure is shown as being defined, in part, by a surface **5148** of the housing **5110** of the medicament delivery device **5000**, in other embodiments, the housing **5170** of the electronic circuit system assembly **5900** can define a substantially enclosed cavity **5158** configured to function as an acoustic chamber. In some embodiments, for example, a housing **5170** can include a sidewall configured to be disposed against a portion of the medicament delivery device **5000** and define a boundary of an acoustic enclosure. In such embodiments, the side wall can be any suitable side wall for coupling the housing **5170** of the electronic circuit system assembly **5900** to the medicament delivery device **5000** and/or enhancing the audible output produced by the speaker **5956**. For example, the side wall can be an elastic side wall. In other embodiments, the side wall can be a porous side wall.

Although the cavity **5158** of the housing **5170** of the electronic circuit system assembly **5900** is shown as being disposed adjacent the medicament delivery device **5000**, in some embodiments, a portion of the medicament delivery device can be disposed within the cavity. For example, in some embodiments, the electronic circuit system assembly can be disposed about a portion of the medicament delivery device.

While various embodiments of the invention have been described above, it should be understood that they have been presented by way of example only, and not limitation. Where methods described above indicate certain events occurring in certain order, the ordering of certain events may be modified. Additionally, certain of the events may be performed concurrently in a parallel process when possible, as well as performed sequentially as described above.

For example, although the audio output device **4956** is shown and described as having front portion **4957** configured to produce a first set of sound waves and a back portion **4955** opposite the front portion configured to produce a second set of sound waves, in other embodiments, an audio device can have a first portion configured to produce a first set of sound waves and a second portion configured to produce a second set of sound waves wherein the first portion is not opposite the second portion. For example, in some embodiments, an audio output device can have a first surface configured to produce a first set of sound waves and a second surface adjacent and/or in contact with the first surface, the second surface configured to produce a second set of sound waves.

Although the electronic circuit system cavity **4153** is shown as defining a substantially rectangular acoustic enclosure, in some embodiments, a medicament delivery device can define an acoustic enclosure having any suitable shape. For example, in some embodiments, a medicament delivery device can define a substantially cylindrical acoustic enclosure.

The electronic circuit system cover **4170** is matingly coupled to the housing **4110** such that the electronic circuit system cover **4170** and the electronic circuit system cavity **4153** collectively define an acoustic enclosure within which the audible output device **4956** is disposed. Said another way, the electronic circuit system cover **4170** and the electronic circuit system cavity **4153** collectively form a region, volume and/or space that is configured to minimize or attenuate noise and/or enhance the audible output of the audible output device **4956**. Moreover, the volume associated with the region defined by the electronic circuit system cover **4170** and the electronic circuit system cavity **4153** is larger than the volume of the audible output device **4956** and/or the electronic circuit system **4900** disposed within the region. In this manner, the acoustic enclosure defined by the electronic circuit system cover **4170** and the electronic circuit system cavity **4153** is configured to contain a volume of air behind the audible output device **4956**.

Although the electronic circuit system cavity **4153** is shown as defining the acoustic enclosure, in other embodiments, a medicament delivery device can define an acoustic enclosure that is separate from a cavity within which a portion of the electronic circuit system is disposed. In some embodiments, for example a housing can define a first cavity within which a printed circuit board of an electronic circuit system is disposed and a second cavity distinct from the first cavity within which a portion of an audio output device is disposed. The first cavity can include, for example, potting material to enhance the reliability and/or performance of the printed circuit board. The second cavity can be devoid of internal structure and can function as an acoustic enclosure.

Although the electronic circuit system cavity **4153** is shown and described as being substantially devoid of structure, in other embodiments, an electronic circuit system cavity can include components therein to enhance the performance of the cavity as an acoustic enclosure. For example, in some embodiments, an electronic circuit system cavity can include a set of baffles. In this manner, the length through which sound waves produced by a back portion of an audio output device can be increased to a value greater than an overall length of the electronic circuit system cavity.

Although the electronic circuit system cavity **4153** is shown and described as having a single "port" (i.e., the battery isolation protrusion aperture **4121**) disposed at the distal end thereof, in other embodiments, an electronic circuit system cavity **4153** can include a port disposed in any suitable location. For example, in some embodiments, an electronic circuit system cavity can include a port disposed at the proximal end thereof. Moreover, in some embodiments, an electronic circuit system cavity **4153** can include multiple openings at multiple different locations.

While the housing shown in the current embodiment is rigid, a portion of the housing can be made flexible such that the flexible portion of the housing operates as a passive counterpart to the active operation of the audible output device. In such embodiment, the flexible portion of the housing can dynamically adjust the acoustic enclosure size and/or shape to improve the sound pressure level produced by the audible output device. For example, in some embodiments, the sidewall of the housing that defines a portion of an acoustic enclosure can be a movable member such as, for example, a piston. In yet other embodiments, the sidewall can be a flexible member such as, for example, a diaphragm. The sidewall can be integrally formed with the housing or can be separately formed.

Although the battery assembly **4962** is shown and described as including two batteries stacked on top of one another, in other embodiments, a battery assembly can include two or more batteries that are not arranged in a

stacked fashion. For example, in some embodiments, a battery assembly can include two or more batteries that are arranged end-to-end such that an edge of one battery is in contact with an edge of another battery. In other embodiments, a battery assembly can include two or more batteries that are spaced apart from each other. Similarly, although the battery clip **4910** is shown and described as having a single contact portion **4918** at the distal end thereof, in other embodiments (e.g., embodiments in which the battery assembly includes batteries in an unstacked relationship), a battery clip can include more than one contact portion.

Although the battery assembly **4962** is shown and described above as including three volt, "watch-style" batteries, in other embodiments, the electronic circuit system **4900** can be powered by any suitable power source. For example, in some embodiments, the battery assembly **4962** can include one or more rechargeable batteries. Such an arrangement is well-suited for multiple-use medicament delivery devices (e.g., chronic-care devices). In other embodiments, an electronic circuit system can be devoid of a battery assembly **4962**. Said another way, in some embodiments, electrical power can be provided to an electronic circuit system by a source other than batteries (e.g., a solar power supply, a capacitance-based power supply, a bio-active power supply that produces electricity by breaking down organic materials, a small-scale mechanical generator, a small-scale fuel cell or the like).

Although the medicament delivery device **4000** is shown and described as being an actual medicament delivery device, in some embodiments, the housing **4110** and/or the electronic circuit system **4900** can be associated with a simulated medicament delivery device. Such simulated devices can be devoid of medicament and/or needles, and can be used, for example, to train users in the operation of a corresponding actual medicament delivery device.

The simulated medicament delivery device can include an electronic circuit system configured to output an electronic output associated with the use of the simulated medicament delivery device. As described herein, in some embodiments, for example, the electronic output can be associated with an identification of the simulated medicament delivery device, an identification of certain components of the simulated medicament delivery device (e.g., a top portion, a safety lock, or the like), an identification of a physical condition for which a patient may require the medicament delivery device and/or an instruction for using the simulated medicament delivery device and/or the corresponding actual medicament delivery device.

Moreover, the electronic output can include any type of electronic output and/or signal discussed herein, such as, for example, a visual output, an audible output and/or a haptic output. For example, in some embodiments, the electronic output can be a signal associated with an audible message (e.g., recorded speech) identifying the simulated medicament delivery device. Such an audible message can state, for example, "You have removed an auto-injector trainer that will teach you how to use an actual auto-injector. This trainer does not contain any medicament. If this is an actual emergency, please dial 911 or locate an actual auto-injector." In some embodiments, an audible output can instruct a user in the use of the simulated medicament delivery device. Such an audible message can state, for example, "The first step in using an actual auto-injector is to identify the key features of the auto-injector. The key features of the auto-injector are the safety lock and the actuator button . . . . " In other embodiments, the electronic output can be associated with a visual indicator that identifies one or more components of the simulated medicament delivery device.

The simulated medicament delivery device can simulate the actual medicament delivery device in any number of ways. For example, in some embodiments, the simulated medicament delivery device can have a shape corresponding to a shape of the actual medicament delivery device, a size corresponding to a size of the actual medicament delivery device and/or a weight corresponding to a weight of the actual medicament delivery device. Moreover, in some embodiments, the simulated medicament delivery device can include components that correspond to the components of the actual medicament delivery device. In this manner, the simulated medicament delivery device can simulate the look, feel and sounds of the actual medicament delivery device. For example, in some embodiments, the simulated medicament delivery device can include external components (e.g., a housing, a needle guard, a sterile cover, a safety lock or the like) that correspond to external components of the actual medicament delivery device. In some embodiments, the simulated medicament delivery device can include internal components (e.g., an actuation mechanism, a spring, a compressed gas source, a medicament container or the like) that correspond to internal components of the actual medicament delivery device.

In some embodiments, however, the simulated medicament delivery device can be devoid of a medicament and/or those components that cause the medicament to be delivered (e.g., a needle, a nozzle or the like). In this manner, the simulated medicament delivery device can be used to train a user in the use of the actual medicament delivery device without exposing the user to a needle and/or a medicament. Moreover, the simulated medicament delivery device can have features to identify it as a training device to prevent a user from mistakenly believing that the simulated medicament delivery device can be used to deliver a medicament. For example, in some embodiments, the simulated medicament delivery device can be of a different color than a corresponding actual medicament delivery device. Similarly, in some embodiments, the simulated medicament delivery device can include a label clearly identifying it as a training device.

In some embodiments, the simulated medicament delivery device can repeatedly simulate the actual medicament delivery device. In this manner, the simulated medicament delivery device can be configured to repeat the electronic output or predetermined sequence of electronic outputs during subsequent simulations.

Although the simulated medicament delivery device is described as including external components and/or internal components to simulate actual medicament delivery devices, in some embodiments, a simulated medicament delivery device can be devoid of certain components, such as, for example, springs, actuation mechanisms or the like. For example, in some embodiments, a simulated medicament delivery device can include an electronic circuit system configured to output an electronic output to simulate any one of a tactile sensation, an audible sensation, a visual sensation, an olfactory sensation and/or a taste sensation associated with a use of the medicament delivery device. In this manner, the simulated medicament delivery device can simulate a medicament delivery device without mechanical components and/or medicament, which can be make the simulated medicament delivery device expensive, unsafe to use, difficult to use, difficult to reset for repeated use or the like.

Some embodiments include a processor and a related processor-readable medium having instructions or computer code thereon for performing various processor-implemented operations. Such processors can be implemented as hardware modules such as embedded microprocessors, microprocessors as part of a computer system, Application-Specific Integrated Circuits ("ASICs"), and Programmable Logic Devices ("PLDs"). Such processors can also be implemented as one or more software modules in programming languages as Java, C++, C, assembly, a hardware description language, or any other suitable programming language.

A processor according to some embodiments includes media and computer code (also can be referred to as code) specially designed and constructed for the specific purpose or purposes. Examples of processor-readable media include, but are not limited to: magnetic storage media such as hard disks, floppy disks, and magnetic tape; optical storage media such as Compact Disc/Digital Video Discs ("CD/DVDs"), Compact Disc-Read Only Memories ("CD-ROMs"), and holographic devices; magneto-optical storage media such as optical disks, and read-only memory ("ROM") and random-access memory ("RAM") devices. Examples of computer code include, but are not limited to, micro-code or micro-instructions, machine instructions, such as produced by a compiler, and files containing higher-level instructions that are executed by a computer using an interpreter. For example, an embodiment of the invention can be implemented using Java, C++, or other object-oriented programming language and development tools. Additional examples of computer code include, but are not limited to, control signals, encrypted code, and compressed code.

Although various embodiments have been described as having particular features and/or combinations of components, other embodiments are possible having a combination of any features and/or components from any of embodiments where appropriate. For example, although the medicament delivery device **4000** is shown and described as including an electronic circuit system cavity **4153** that can function as an acoustic enclosure and an electronic circuit system devoid of a signal amplifier, in other embodiments, a medicament delivery device can include an acoustic enclosure and an electronic circuit system having a signal amplifier. In such embodiments, for example, the electronic signal produced by a processor (which can have a power of less than 100 milliwatts) can be amplified to provide an input signal to a speaker having a power level of greater than the power level of the signal produced by the processor.

What is claimed is:

1. A method, comprising:

removing a distal end portion of a medical injector from within an outer case, the medical injector including a housing, an actuator, a locking member, and an electronic circuit system, the locking member in contact with the actuator to limit movement of the actuator when the locking member is in a first position, the electronic circuit system including an output device and a network interface device, the outer case including a protrusion disposed within the housing and in contact with the electronic circuit system when the distal end portion of the medical injector is within the outer case, the protrusion disposed outside of the housing when the distal end portion of the medical injector is outside of the outer case, the electronic circuit system producing a first output via the output device in response to the protrusion being spaced apart from the electronic circuit system when the distal end portion of the medical injector is removed from within the outer case,

moving the locking member from the first position to a second position, the locking member spaced apart from the actuator when the locking member is in the second position; and

moving the actuator to initiate delivery of a medicament from the medical injector, the electronic circuit system producing a second output via the output device in response to the moving the actuator, the network interface device transmitting a wireless signal to a remote device, the wireless signal associated with at least one of the moving the locking member or the moving the actuator.

2. The method of claim **1**, wherein:

the medical injector includes a medicament container within the housing;

the output device is a speaker disposed within the housing; and

the protrusion actuates the electronic circuit system when the distal end portion of the medical injector is removed from the outer case to cause the electronic circuit system to produce the first output via the speaker.

3. The method of claim **1**, wherein:

the medical injector includes a medicament container within the housing, the housing defining a status aperture aligned with the medicament container; and

the outer case surrounds the housing of the medical injector such that the status aperture is obstructed when the distal end portion of the medical injector is within the outer case, the medicament within the medicament container being visible via the status aperture after the removing the distal end portion of the medical injector from within the outer case.

4. The method of claim **1**, wherein the medical injector includes a medicament container within the housing, the housing defining a status aperture aligned with the medicament container, the outer case surrounding the housing of the medical injector such that the status aperture is obstructed when the distal end portion of the medical injector is within the outer case, the method further comprising:

viewing, after the removing, the medicament via the status aperture.

5. The method of claim **1**, wherein:

the medical injector includes a medicament container within the housing, a needle, and a needle sheath, the medicament container placed in fluid communication with the needle in response to the moving the actuator to initiate delivery of the medicament from the medical injector, the needle sheath disposed about the needle before the moving the actuator; and

the removing the distal end portion of the medical injector from within the outer case is performed while maintaining the needle sheath about the needle.

6. The method of claim **1**, further comprising:

replacing the distal end portion of the medical injector inside the outer case.

7. The method of claim **1**, wherein the first output is a recorded speech output indicating an expiration date of the medicament.

8. The method of claim **1**, wherein:

the wireless signal is a first wireless signal;

the remote device is a cell phone; and

the network interface device is configured to receive a second wireless signal from the cell phone, the second wireless signal including information associated with the medical injector.

9. The method of claim **1**, wherein the second output is a recorded speech output including a countdown timer.

10. The method of claim 1, wherein the second output is a recorded speech output providing a post-injection disposal procedure.

11. The method of claim 1, wherein the wireless signal is associated with the moving the actuator and includes information confirming that an injection operation is complete.

12. The method of claim 1, wherein the medical injector is an autoinjector and the medicament is epinephrine.

13. A method, comprising:

removing an end portion of a medical injector from within an outer case, the medical injector including a housing, a medicament container within the housing, a needle, a needle sheath, and an electronic circuit system, the needle sheath disposed about the needle to maintain the needle within a sterile field, the sterile field being maintained after the removing the end portion of the medical injector from within the outer case, the electronic circuit system including an output device and a network interface device, the electronic circuit system producing a first output via the output device in response to the removing the end portion of the medical injector from within the outer case;

removing a locking member from the medical injector to enable actuation of the medical injector, a first portion of the locking member coupled to the needle sheath such that the needle sheath is removed from about the needle when the locking member is removed, a second portion of the locking member engaging the electronic circuit system such that the electronic circuit system produces a second output via the output device in response to the removing the locking member; and

actuating the medical injector to initiate delivery of a medicament from the medicament container, the electronic circuit system producing a second output via the output device in response to the actuating, the network interface device transmitting a wireless signal to a remote device, the wireless signal associated with at least one of the removing the locking member or the actuating the medical injector.

14. The method of claim 13, wherein:

the output device is a speaker disposed within the housing of the medical injector; and

the outer case includes a protrusion disposed within the housing when the end portion of the medical injector is within the outer case, the protrusion actuating the electronic circuit system when the end portion of the medical injector is removed from within the outer case to cause the electronic circuit system to produce the first output via the output device.

15. The method of claim 13, wherein:

the housing of the medical injector defines a status aperture aligned with the medicament container; and

the outer case surrounds the housing of the medical injector such that the status aperture is obstructed when the end portion of the medical injector is within the outer case, the medicament within the medicament container being visible via the status aperture after the removing the end portion of the medical injector from within the outer case.

16. The method of claim 13, wherein:

the actuating includes moving an actuator coupled to the housing; and

the wireless signal is associated with the moving the actuator and includes information confirming that an injection operation is complete.

17. The method of claim 13, wherein the medical injector is an autoinjector and the medicament container contains epinephrine.

18. A method, comprising:

removing a distal end portion of a medical injector from within an outer case, the medical injector including an actuator, a locking member, and an electronic circuit system, the outer case covering the actuator when the distal end portion of the medical injector is within the outer case, a portion of the outer case engaging the electronic circuit system when the distal end portion of the medical injector is within the outer case, the portion of the outer case spaced apart from the electronic circuit system when the distal end portion of the medical injector is outside of the outer case, the locking member in contact with the actuator to limit movement of the actuator when the locking member is in a first position, the electronic circuit system including an output device and a network interface device, the electronic circuit system producing a first output via the output device in response to the portion of the outer case being spaced apart from the electronic circuit system by the removing the distal end portion of the medical injector from within the outer case;

moving the locking member from the first position to a second position, the locking member spaced apart from the actuator when the locking member is in the second position; and

moving the actuator to initiate delivery of a medicament from the medical injector, the electronic circuit system producing a second output via the output device in response to the moving the actuator, the network interface device transmitting a wireless signal to a remote device, the wireless signal associated with at least one of the moving the locking member or the moving the actuator.

19. The method of claim 18, wherein:

the medical injector includes a housing and a medicament container within the housing, the housing defining a status aperture aligned with the medicament container; and

the outer case surrounds the housing of the medical injector such that the status aperture is obstructed when the distal end portion of the medical injector is within the outer case, the medicament within the medicament container being visible via the status aperture after the removing the distal end portion of the medical injector from within the outer case.

20. The method of claim 18, wherein:

the wireless signal is a first wireless signal;

the remote device is a cell phone; and

the network interface device is configured to receive a second wireless signal from the cell phone, the second wireless signal including information associated with the medical injector.

21. The method of claim 18, wherein:

the medical injector includes a housing, a medicament container within the housing, a needle, and a needle sheath, the medicament container placed in fluid communication with the needle in response to the moving the actuator to deliver the medicament from the medical injector, the needle sheath disposed about the needle before the moving the actuator; and

the removing the distal end portion of the medical injector from within the outer case is performed while maintaining the needle sheath about the needle.

22. The method of claim **18**, wherein the medical injector is an autoinjector and the medicament is epinephrine.

23. The method of claim **18**, further comprising:

replacing the distal end portion of the medical injector inside the outer case.

* * * * *